NEMA SB*10 91 ■ 6470247 0502102 469 ■

nema

STANDARDS PUBLICATION NO. SB 10

Audio Standard For Nurse Call Systems

NEMA

NATIONAL ELECTRICAL MANUFACTURERS ASSOCIATION ■ 2101 L STREET, N.W., WASHINGTON, D.C. 20037

Copyright National Electrical Manufacturers Association
Provided by IHS under license with NEMA
No reproduction or networking permitted without license from IHS
Not for Resale

NEMA SB 10-1991

SB 10

AUDIO STANDARD FOR NURSE CALL SYSTEMS

Published by

National Electrical Manufacturers Association
2101 L Street, N.W., Suite 300
Washington, DC 20037

© 1991 by National Electrical Manufacturers Association

Copyright National Electrical Manufacturers Association
Provided by IHS under license with NEMA
No reproduction or networking permitted without license from IHS
Not for Resale

Table of Contents

FOREWORD i
SCOPE i
PURPOSE i
INTRODUCTION i
HISTORY ii

Section 1 DEFINITIONS
Intercom 1
Microphone 1
Mode A 1
Mode B 1
Nurse Control Station (NCS) 1
Patient Station 1
Pillow Speaker 1
Pink Noise 1
Signal to Noise Ratio (S/N) 1
Sound Pressure Level (SPL) 1
Speaker 1

Section 2 GENERAL REQUIREMENTS
Equipment Set-up 3
System Output Levels 3
System Input Levels 3
Ambient SPL 3
Minimum Signal to Noise Ratio 3
Figure 2-1, Setup For Mode A Level (NCS) 4
Figure 2-2, Setup For Mode B Level 5
Figure 2-3, Setup For Mode B S/N Ratio 6
Figure 2-4, Setup For Mode A S/N Ratio (NCS) 7

Section 3 TEST EQUIPMENT REQUIRED
Test Equipment Required 9
Figure 3-1, Test Setup 9
Figure 3-2, Test Setup 10

Section 4 TEST PROCEDURE
Data Recording 11
NCS Output/Patient Station Input Sensitivity 11
Mode A Signal to Noise (Patient Station) 11
Mode A Level (Pillow Speaker) 11
NCS S/N From Pillow Station 11
Mode B Level (Patient Station) 13
Mode B S/N (Patient Station) 13
Mode B Level (Pillow Speaker) 13
Mode B S/N (Pillow Speaker) 13
Table 4-117, Nurse Call Audio Performance Data Worksheet 12

Copyright National Electrical Manufacturers Association
Provided by IHS under license with NEMA
No reproduction or networking permitted without license from IHS
Not for Resale

Foreword

The preparation of this Standard Publication was initiated in response to input from the Veterans Administration. Input from other interested parties has also been sought and evaluated. Inquiries, comments, and proposed or recommended revisions should be submitted to the concerned NEMA product subdivision by contacting the:

Vice President, Engineering
National Electrical Manufacturers Association
2101 L Street, N.W., Suite 300
Washington, DC 20037

Scope

This publication contains requirements and test procedures for the evaluation of the audio quality of installed nurse call systems utilizing loud speaking nurse control stations in conjunction with loud speaking patient stations and pillow speakers.

Purpose

This document provides a standardized method for testing the audio of an installed nurse call system to assure that the installation methods used provide an adequate level of audio quality.

Introduction

A nurse call system is the common name for the equipment used in health care facilities to allow communication, aurally/ visually, or both, between staff and patients. Currently, there is no standard definition of either what a nurse call system must be capable of doing or the minimum equipment required to perform nurse call functions.

Local codes usually specify minimum equipment and features for installations within specific regions governed by the code, but there is no uniform standard that supersedes the local codes and ordinances. Features and functions of a nurse call system can, therefore, vary widely from installation to installation.

General conclusions can be drawn from observations of many installations. One is that a minimum nurse call system consists of three basic components:

1. Call cord pendant or pillow speakers which are located at the patients' beds that allow the patients to place calls for assistance;
2. An indicator lamp, located usually in the corridor outside of the patients' rooms, that illuminates to visually indicate that the patient has placed a call for assistance; and
3. An annunciator panel, located at the nurses' staff office, ward clerk's desk, and such, which contains a display capable of indicating which patients' rooms have registered requests for assistance.

Many nurse call systems have additional capabilities, including two-way aural contact between the annunciator panel (or master station) and the patients' rooms to answer patients' questions; requests for food, water, and such; and other non-emergency information.

Copyright National Electrical Manufacturers Association
Provided by IHS under license with NEMA
No reproduction or networking permitted without license from IHS
Not for Resale

History

This NEMA Standards Publication is the result of many years of research and investigation by members of NEMA. It was developed through consultation among manufacturers, users, and testing laboratories. It reflects study of the following standards and technical documents that were helpful in the preparation.

American National Standards Institute
11 W 42nd Street
New York, NY 10016

ANSI/NFPA 70-1990	*National Electrical Code*
ANSI/NFPA 99-1990	*Standard for Health Care Facilities*
ANSI/IEEE 602-1986	*IEEE Recommended Practice for Electrical Systems in Health Care Facilities*
ANSI/UL 1069-1989	*Hospital Signaling And Nurse Call Equipment*

Canadian Standards Association, Inc.
178 Rexdale Boulevard
Rexdale, Ontario, Canada M9W 1R3

CSA C22.2 No. 125-1984	*Class 8711-01 Electromedical Equipment*

Federal Communications Commission
2025 M Street, N.W.
Washington, DC 20554

FCC Rules & Regulations Part 15 sub part J,	*Class A&B Radiation Requirements of Computing Devices*

Government of Canada
Department of Communication
1241 Clyde Avenue
Ottawa, Ontario, Canada K2C 143

DOC Radio Act Registration
SOR/88-475 (TRC-77)

Copyright National Electrical Manufacturers Association
Provided by IHS under license with NEMA
No reproduction or networking permitted without license from IHS
Not for Resale

SECTION 1
DEFINITIONS

1.1 Intercom is the means used by two parties to communicate via an aural communications system integral to the nurse call system and the actual circuitry that provides the capability of aural communication between two parties.

NEMA Standard 5-9-1991.

1.2 Microphone is an electro-acoustic transducer that converts acoustic energy to electrical energy. For the purpose of this Standards Publication a loud speaker may operate as a microphone.

NEMA Standard 5-9-1991.

1.3 Mode A is the condition where the nurse call intercom is so configured that the NCS is "listening" to a patient via either the patient station or the pillow speaker.

NEMA Standard 5-9-1991.

1.4 Mode B is a condition where the nurse call system is so configured that the NCS is "talking" to a patient via either the patient station or the pillow speaker.

NEMA Standard 5-9-1991.

1.5 Nurse Control Station (NCS) is a controlling device that the nurse, duty clerk, ward clerk, and such, uses to communicate with the patients' rooms; has the capability of annunciating calls from patients' rooms by aural/visual, or both, means and has the capability of providing verbal communication between the patient and the nurse/ward clerk/duty clerk/and such, sometimes called "master" or "master station" or "NCS."

NEMA Standard 5-9-1991.

1.6 Patient Station is a device located in a patient's room containing the circuitry required to provide both microphone and loudspeaker functions as required by the nurse call intercom. The patient station is the location of one of the parties in a two-party intercom communication.

NEMA Standard 5-9-1991.

1.7 Pillow Speaker is a device, sometimes called a pendant control, located at a patient's bed and that contains the circuitry required to provide both microphone and loudspeaker functions, as required by the nurse call intercom. The pillow speaker is often an extension of the patient station and may be capable of controlling other devices external to the nurse call system, such as a television set.

NEMA Standard 5-9-1991.

1.8 Pink Noise is a random noise that is band-limited at 12 dB per octave, 20 Hz to 20 Khz equal energy per octave.

NEMA Standard 5-9-1991.

1.9 Signal to Noise Ratio (S/N) is the calculated ratio of the measured rms electrical value taken at the speaker when generating the minimum rated acoustic output level divided by the measured rms electrical value at the speaker when the microphone has been replaced with an equivalent resistive load.

NEMA Standard 5-9-1991.

1.10 Sound Pressure Level (SPL) is a quantitative measurement of loudness on a logarithmic scale referenced to 20 Pa (20 micro pascal).

NEMA Standard 5-9-1991.

1.11 Speaker is an electro-acoustic transducer that converts electrical energy to acoustic energy.

NEMA Standard 5-9-1991.

Copyright National Electrical Manufacturers Association
Provided by IHS under license with NEMA
No reproduction or networking permitted without license from IHS
Not for Resale

Copyright National Electrical Manufacturers Association
Provided by IHS under license with NEMA
No reproduction or networking permitted without license from IHS

Not for Resale

SECTION 2
GENERAL REQUIREMENTS

2.1 EQUIPMENT SET-UP

The equipment associated with the system under test shall be:

a. Correctly installed per the manufacturer's instructions and methods;
b. Functioning properly per manufacturer's specifications;
c. Operated correctly per manufacturer's operating instructions; and
d. Configured to achieve a two-party intercom communication between the NCS and one patient station or pillow speaker.

NEMA Standard 5-9-1991.

2.2 SYSTEM OUTPUT LEVELS

The output level shall be measured 1 meter on axis from the speaker of the receiving element of a two-party intercom communication and be referred to the input level at the transmitting microphone as specified herein.

NEMA Standard 5-9-1991.

2.3 SYSTEM INPUT LEVELS

The input level shall be measured at the microphone at the transmitting end of the two-party intercom communication and shall be the minimum input supplied for the output level test.

NEMA Standard 5-9-1991.

2.4 AMBIENT SPL

The maximum ambient SPL at input and output transducers shall not exceed 50 dB for valid test results.

2.4.1 The NCS input level (mode B) shall be 66 dB SPL maximum, measured at the microphone of the NCS (see Figure 2-2).

2.4.2 The patient station output level (mode A) shall be 76 Db SPL minimum measured on axis at a distance of 1 meter from the patient station speaker (see Figure 2-2).

2.4.3 The pillow speaker output level (mode A) shall be 76 dB SPL minimum measured on axis at a distance of 1 meter from the pillow speaker (see Figure 2-2).

2.4.4 The patient station input level (mode B) shall be 66 dB SPL maximum measured at the microphone of the patient speaker (see Figure 2-1).

2.4.5 The pillow speaker input level (mode B) shall be 66 dB SPL maximum measured at the microphone of the pillow speaker (see Figure 2-1).

2.4.6 The NCS output levels (mode A) shall be 76 dB minimum measured on axis at a distance of 1 meter from the NCS speaker (see Figure 2-1).

NEMA Standard 5-9-1991.

2.5 MINIMUM SIGNAL TO NOISE RATIO

The following shall be the minimum S/N measured at the speakers.

2.5.1 Patient Station Speaker: 35 dB (see Figure 2-3).

2.5.2 Pillow Speaker: 35 dB (see Figure 2-3).

2.5.3 NCS: 35 dB (see Figure 2-4).

NEMA Standard 5-9-1991.

Copyright National Electrical Manufacturers Association
Provided by IHS under license with NEMA
No reproduction or networking permitted without license from IHS

Not for Resale

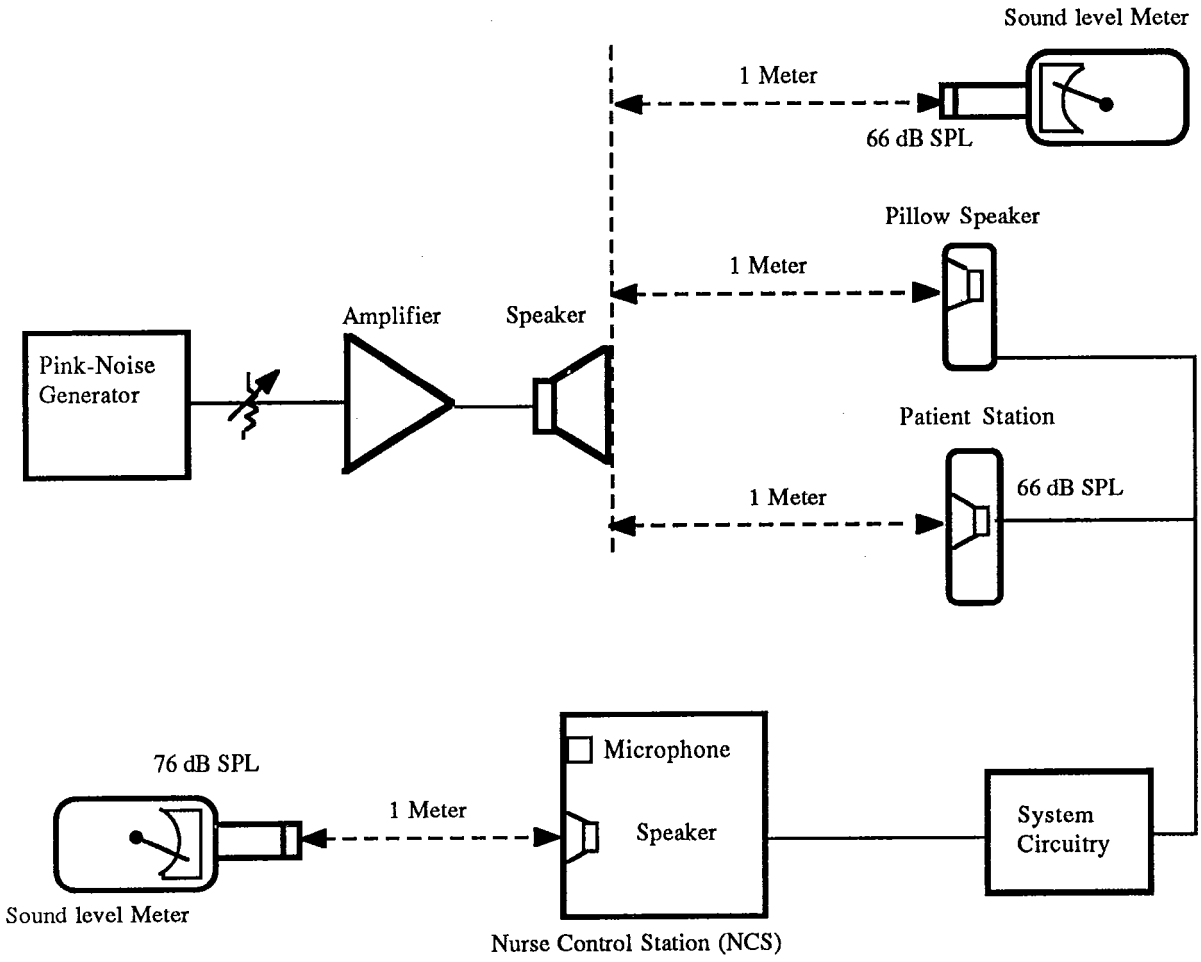

Figure 2-1
Setup For Mode A Level (NCS)

It shall be permissible to use either a patient station or a pillow speaker as the reference for the nurse station receiver level. The 1-meter distance must be maintained throughout the test, and all measurements taken on axis and all sources aligned on axis.

NEMA Standard 5-9-1991.

Copyright National Electrical Manufacturers Association
Provided by IHS under license with NEMA
No reproduction or networking permitted without license from IHS
Not for Resale

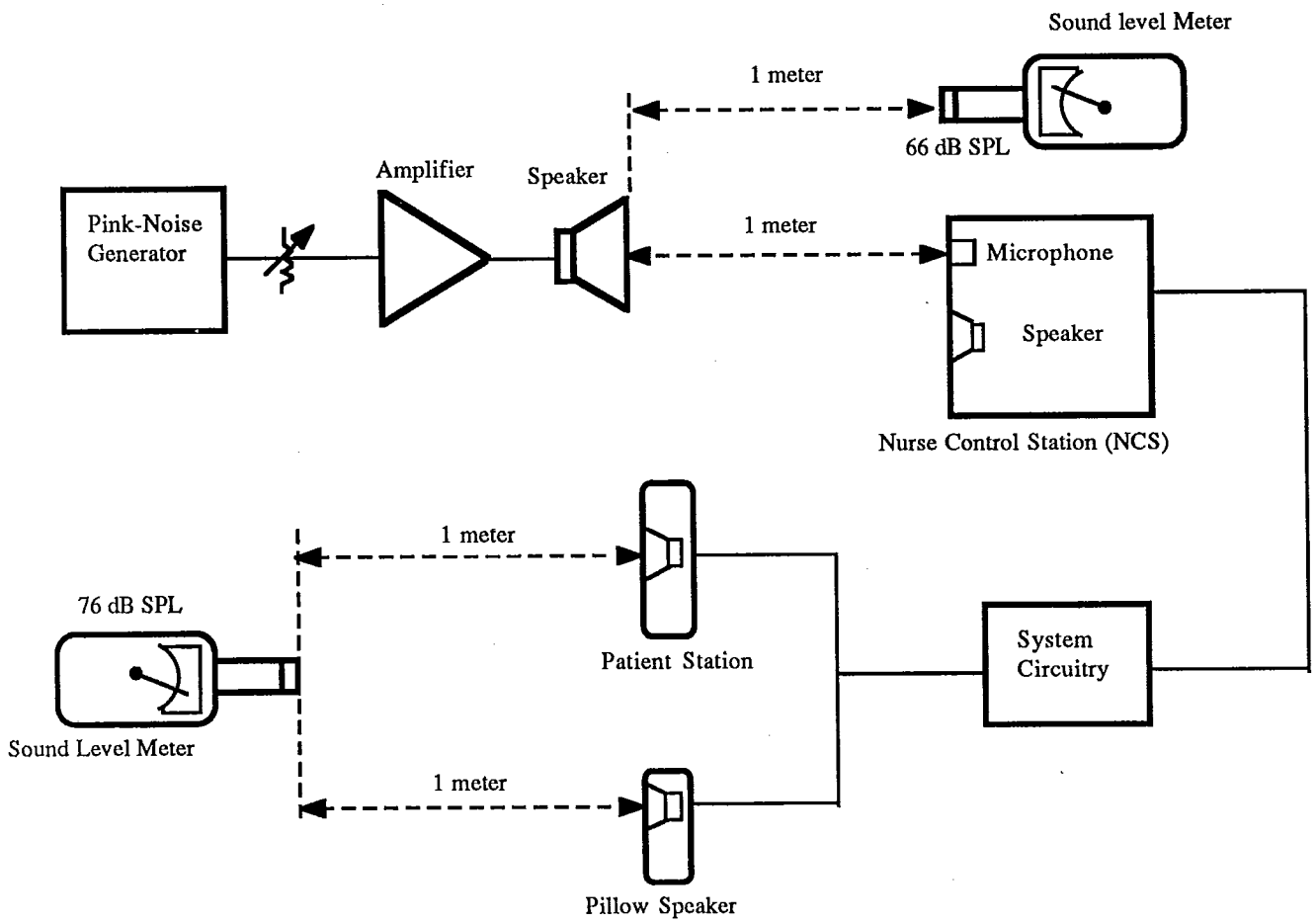

Figure 2-2
Setup Mode B Level
Patient Station/Pillow Speaker

It shall be permissible to use either a patient station or a pillow speaker as a reference for the NCS input level. The 1-meter distance must be maintained throughout the test and all measurements taken on axis and all sources aligned on axis.

NEMA Standard 5-9-1991.

Copyright National Electrical Manufacturers Association
Provided by IHS under license with NEMA
No reproduction or networking permitted without license from IHS
Not for Resale

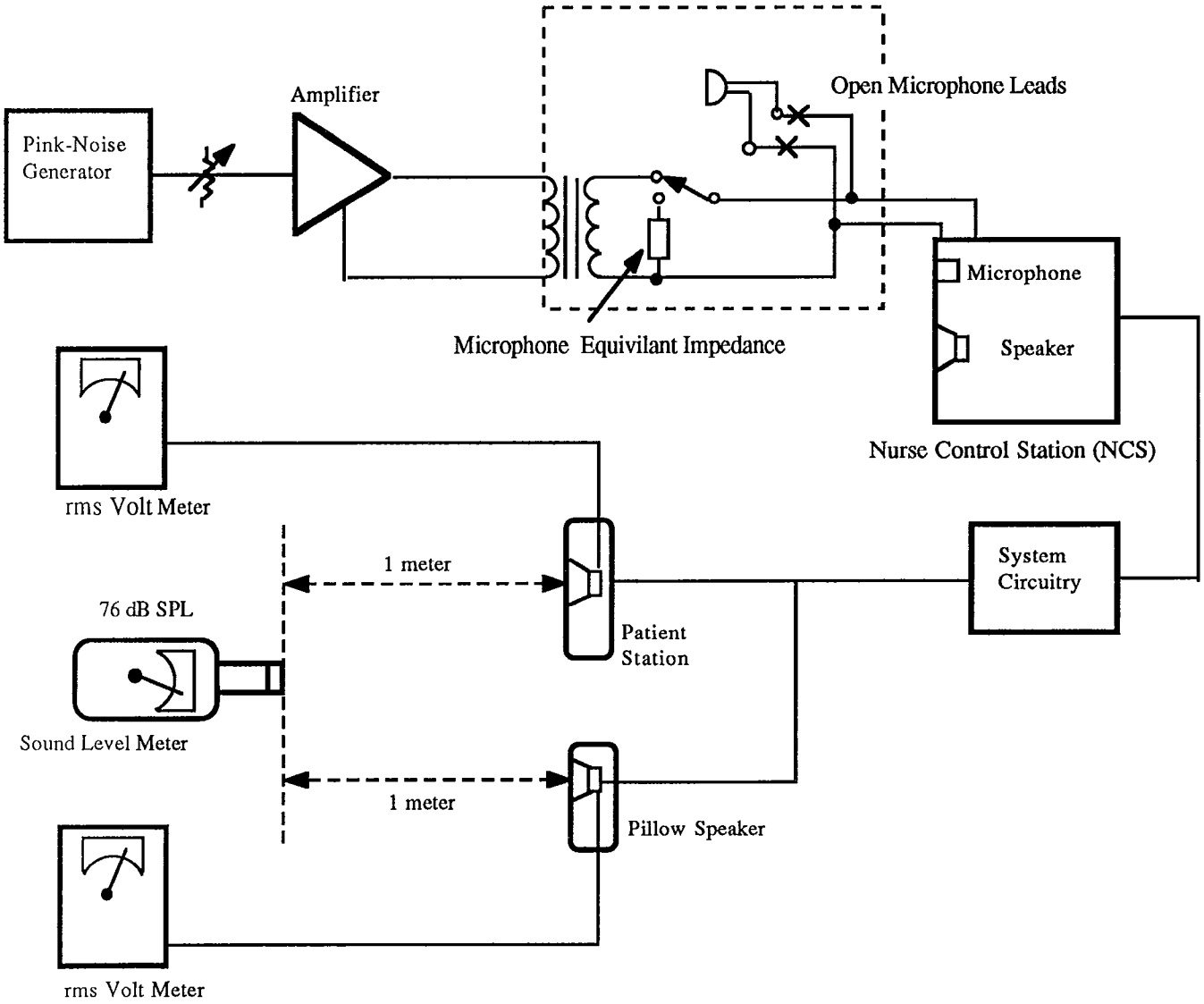

Figure 2-3
Setup For Mode B S/N Ratio
(Pillow Speaker/Patient Station)

It shall be permissible to use either patient station or pillow speaker as a reference for S/N ratio. See Figure 3-2.
NEMA Standard 5-9-1991.

Copyright National Electrical Manufacturers Association
Provided by IHS under license with NEMA
No reproduction or networking permitted without license from IHS
Not for Resale

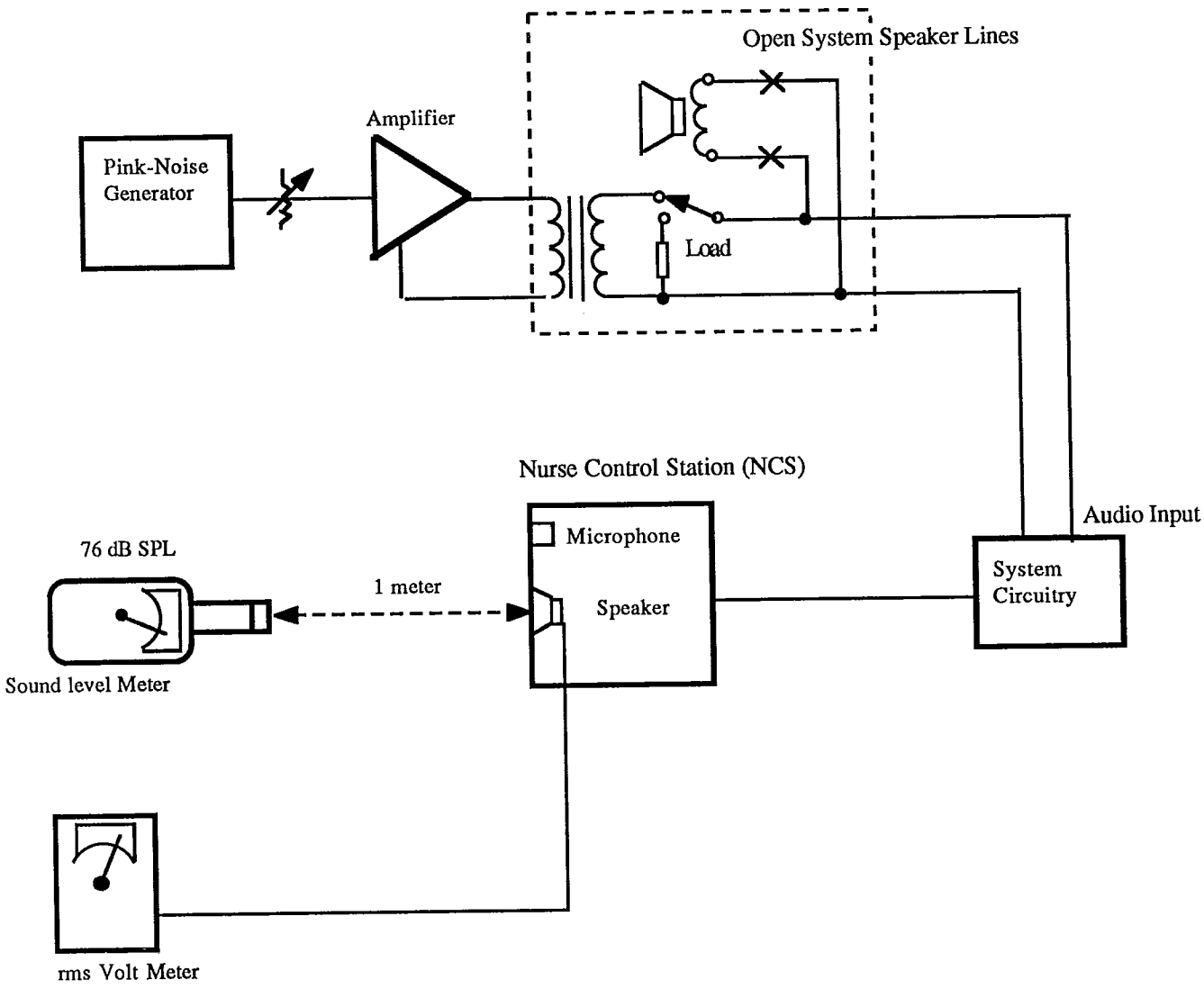

Figure 2-4
Setup For Mode A S/N Ratio (NCS)

It shall be permissible to use either a patient station or pillow speaker as a reference for S/N ratio. See Figure 3-1.
NEMA Standard 5-9-1991.

Copyright National Electrical Manufacturers Association
Provided by IHS under license with NEMA
No reproduction or networking permitted without license from IHS
Not for Resale

Copyright National Electrical Manufacturers Association
Provided by IHS under license with NEMA
No reproduction or networking permitted without license from IHS

Not for Resale

SECTION 3
TEST EQUIPMENT REQUIRED

3.1 The following test equipment shall be used to test the parameters of installed nurse call systems covered by this Standards Publication:

1. A pink-noise generator, with transformer-coupled output, capable of providing signal levels of at least 1 v rms at 10 mA or signal levels sufficient to drive the nurse call system, in all modes of intercom operation, to maximum output levels, per manufacturers' specifications.
2. A rms reading voltmeter with a range of 10 v to 100 v; a minimum input impedance of 100 k ohms; and a minimum frequency response of 3 dB from 100 Hz to 10 KHz.
3. A sound level meter with a range of 20 dB SPL to 120 dB SPL and frequency response conforming to ANSI "C" weighting response characteristics.
4. An audio amplifier and speaker with frequency response of 3 dB over the range of 100 Hz to 10 KHz and capability of producing an SPL of 90 dB at a distance of 1 meter measured on axis.
5. Patient station/pillow speaker test set (see Figure 3-1) as specified by the manufacturer.
6. NCS test set (see Figure 3-2) as specified by the manufacturer.

NEMA Standard 5-9-1991.

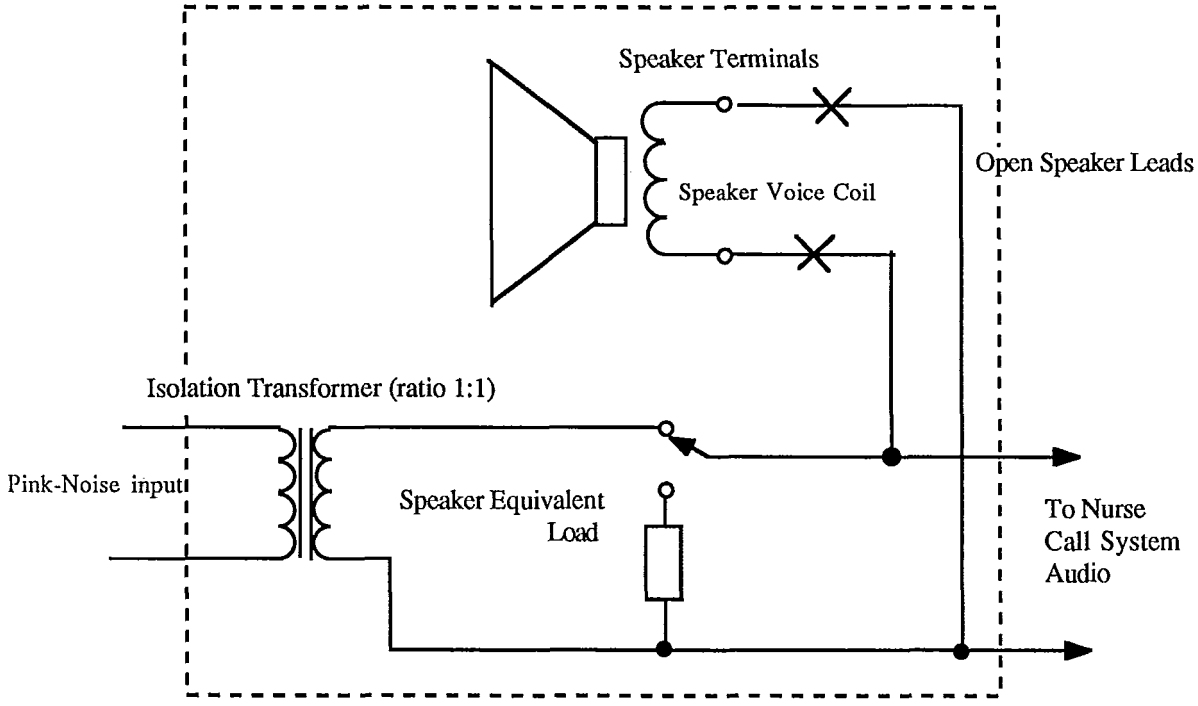

Figure 3-1
Test Set

Typical pillow speaker or patient station setup for S/N ratio measurements.

Authorized Engineering Information 5-9-1991.

Copyright National Electrical Manufacturers Association
Provided by IHS under license with NEMA
No reproduction or networking permitted without license from IHS
Not for Resale

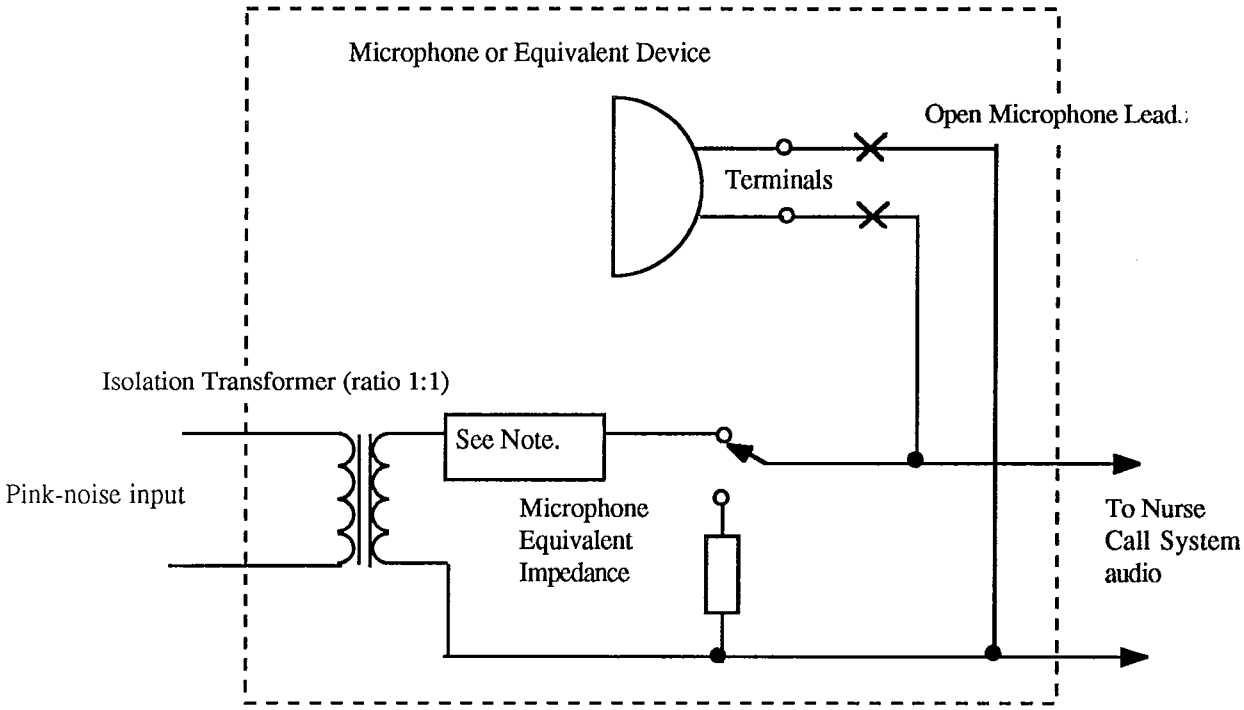

Note: Attenuation circuit may be be required to achieve the proper system input signal level.

Figure 3-2
Test Set

Typical Nurse Control Station (NCS) S/N Ratio setup for signal to noise ratio measurements.

Authorized Engineering Information 5-9-1991.

Copyright National Electrical Manufacturers Association
Provided by IHS under license with NEMA
No reproduction or networking permitted without license from IHS
Not for Resale

SECTION 4
TEST PROCEDURE

4.1 DATA RECORDING

The data for the procedure in 4.1 through 4.9 shall be recorded (see Table 4-1).

4.1.1 Installation

Verify that equipment is installed correctly per manufacturer's instructions.

4.1.2 Operation

Verify that equipment operates correctly per manufacturer's instructions.

NEMA Standard 5-9-1991.

4.2 NCS OUTPUT/PATIENT STATION INPUT SENSITIVITY

4.2.1 System Configuration

The system configuration shall be NCS in two-party intercom with one patient station in mode A (see Figure 2-1).

4.2.2 Reference

Using the pink-noise generator coupled to the amplifier and speaker, establish an SPL of 66 dB incident on axis at the patient station.

4.2.3 Test

Place the sound-level meter at a distance of 1 meter on axis from the NCS speaker and record the reading from the sound-level meter.

NEMA Standard 5-9-1991.

4.3 MODE A SIGNAL TO NOISE (PATIENT STATION)

4.3.1 System Configuration

The system configuration shall be:

a. NCS in two-party intercom with one patient station in mode A (see Figure 2-4).
b. Signal to noise—substitute *test set* in place of pillow speaker.

4.3.2 Reference

a. Configure the switchable load so that the reference level is connected to the system; and
b. Using the pink-noise generator and amplifier in place of the patient station speaker, establish a signal of a magnitude that produces an SPL of 76 dB at a distance of 1 meter from the NCS speaker.

4.3.3 Test Procedure

a. Connect the rms voltmeter to the NCS speaker terminals;
b. Record the reading from the rms voltmeter;
c. Configure the switchable load to connect the dummy load (disconnecting the pink-noise generator and amplifier); and
d. Record the reading from the rms voltmeter.

4.3.4 Calculations

Calculate the mode A S/N:

a. The specification, from 2.5.3, is 35 dB.
b. The S/N = 20 times log (result 4.3.3b/result 4.3.3d)
c. The S/N shall be 35 dB or greater.

NEMA Standard 5-9-1991.

4.4 MODE A LEVEL (PILLOW SPEAKER)

4.4.1 System Configuration

The system configuration shall be a NCS in a two-party intercom with one pillow speaker in mode A (see Figure 2-1).

4.4.2 Reference

Using the pink-noise generator coupled to the amplifier and speaker, establish an SPL of 66 dB incident on axis at pillow speaker. Locate pillow speaker 1 meter above the floor with the back of the unit towards the wall.

4.4.3 Test Procedure

a. Place the sound level meter at a distance of 1 meter on axis from the NCS speaker; and
b. Record the reading from the sound level meter.

NEMA Standard 5-9-1991.

4.5 NCS S/N FROM PILLOW SPEAKER

4.5.1 System Configuration

The system configuration shall be:

a. NCS in two-party intercom with one pillow speaker in Mode A S/N (pillow speaker) (see Figure 2-4).
b. Test set for pillow speaker.

4.5.2 Reference

a. Configure the switchable load so the pillow speaker is connected to the system; and
b. Using the pink-noise generator and amplifier in place of the pillow speaker, establish a signal of a

Copyright National Electrical Manufacturers Association
Provided by IHS under license with NEMA
No reproduction or networking permitted without license from IHS
Not for Resale

Table 4-1
Nurse Call Audio
Performance Data Worksheet

4.1.1 Installation: correct per manufacturer's instructions (pass/fail)___

4.1.2 Operation: performs all specified functions per manufacturer's specifications and operating instructions (pass/fail) ___

Test Proc. Steps	Name	Setup	Reference	Measure Values	Spec. P/F
4.2 4.2.3	Mode A Level (patient station)	Figure 2-1 station	66 dB at patient station	SPL at 1 meter from NCS speaker	76 dB ___
4.3	Mode A S/N (patient station)	Figure 2-4	66 dB at patient station	SPL at 1 meter ___ from NCS speaker and V rms ___ (4.3.3b)	(verify 76 dB)
4.3.4			Calculate: switch in dummy load 20 Log (4.3.3b/4.3.3d)	across NCS speaker V rms ___ (4.3.3d) across NCS speaker ___	35 dB ___
4.4	Model A Level (pillow speaker)	Figure 2-1	66 dB at pillow speaker	SPL at 1 meter from NCS ___ speaker	76 dB
4.5	Mode A S/N (pillow speaker)	Figure 2-4	66 dB at pillow speaker	SPL at 1 meter ___ from NSC speaker and V rms ___ (4.5.3b)	(verify 76 dB)
4.5.4			Calculate: switch in dummy load 20 Log (4.5.3b/4.5.3d)	across NCS speaker V rms ___ (4.5.3d) across NCS speaker ___	35 dB
4.6	Mode B Level (patient station)	Figure 2-2	66 dB at NCS microphone	SPL at 1 meter from patient station ___	76 dB
4.7	Mode B S/N (patient station)	Figure 2-2	66 dB at NCS microphone	SPL at 1 meter from patient station and V rms ___ (4.7.3b)	(verify 76 dB)
4.7.4			Calculate: switch in dummy load 20 Log (4.7.3b/4.7.3.d)	across NCS speaker V rms ___ (4.7.3d) across patient station speaker ___	35 dB
4.8	Mode B Level (pillow speaker)	Figure 2-2 NCS	66 dB speaker microphone	SPL at 1 meter from pillow	76 dB
4.9	Mode B Level S/N (pillow speaker)	Figure 2-3	66 dB speaker at NCS microphone	SPL at 1 meter from pillow speaker and V rms ___ (4.9.3b)	(verify 76 dB)
4.9.4			Calculate: switch in dummy load 20 Log (4.9.3b/4.9.3d)	across pillow speaker V rms ___ (4.9.3d) across pillow speaker ___	35 dB ___

Copyright National Electrical Manufacturers Association
Provided by IHS under license with NEMA
No reproduction or networking permitted without license from IHS
Not for Resale

magnitude that produces an SPL of 76 dB at a distance of 1 meter from the NCS speaker.

4.5.3 Test Procedure

a. Connect the rms voltmeter to the NCS speaker terminals;
b. Record the reading from the rms voltmeter;
c. Configure the switchable load to connect the dummy load (disconnecting the pink-noise generator and amplifier); and
d. Record the reading from the rms voltmeter.

4.5.4 Calculation of Pillow Speaker S/N

a. The specification, from 2.4.2, is 35 dB.
b. The S/N = 20 times log (result 4.5.3b/result 4.5.3d).
c. The S/N shall be equal to or greater than 35 dB.

NEMA Standard 5-9-1991.

4.6 Mode B Level (Patient Station)

4.6.1 System Configuration

The system configuration shall be an NCS in a two-party intercom with one patient station in mode B (see Figure 2-2).

4.6.2 Reference

Using the pink-noise generator coupled to the amplifier and speaker, establish an SPL of at least 66 dB incident on axis at the NCS microphone.

4.6.3 Test Procedure

a. Place the sound-level meter at a distance of 1 meter on axis from the patient station; and
b. Record the reading from the sound-level meter.

NEMA Standard 5-9-1991.

4.7 Mode B S/N (Patient Station)

4.7.1 System Configuration

The system configuration shall be:

a. NCS in two-party intercom with one patient station;
b. NCS in mode B (patient station) (see Figure 2-3).
c. Substitute NCS test set for NCS microphone.

4.7.2 Reference

a. Configure the switchable load such that the NCS speaker is connected to the system; and
b. Using the pink-noise generator and amplifier in place of the NCS microphone, establish a signal of a magnitude that produces an SPL of 76 dB at a distance of 1 meter from the patient station.

4.7.3 Test Procedure

a. Connect the rms voltmeter to the patient station speaker or pillow speaker terminals;
b. Record the reading from the rms voltmeter;
c. Configure the switchable load to connect the dummy load (disconnecting the pink-noise generator and amplifier); and
d. Record the reading from the rms voltmeter.

4.7.4 Mode B S/N (Patient Station)

a. The specification, from 2.5.1, is 35 dB;
b. The S/N = 20 times log (result 4.7.3b/result 4.7.3d); and
c. The S/N shall be 35 dB or greater.

NEMA Standard 5-9-1991.

4.8 Mode B Level (Pillow Speaker)

4.8.1 System Configuration

The system configuration shall be an NCS in two-party intercom with one pillow speaker in mode B (see Figure 2-2).

4.8.2 Reference

Using the pink-noise generator coupled to the amplifier and speaker, establish an SPL of at least 66 dB incident on axis at the NCS microphone.

4.8.3 Test Procedure

a. Place the sound level meter at a distance of 1 meter on axis from the pillow speaker; and
b. Record the reading from the sound-level meter.

NEMA Standard 5-9-1991.

4.9 Mode B S/N (Pillow Speaker)

4.9.1 System Configuration

The system configuration shall be:

a. NCS in two-party intercom with one pillow speaker;
b. NCS in mode B (pillow speaker) (see Figure 2-3); and
c. Substitute NCS test set for NCS microphone.

4.9.2 Reference

a. Configure the switchable load such that the NCS speaker is connected to the system; and
b. Using the pink-noise generator and amplifier in place of the NCS microphone, establish a signal of a magnitude that produces an SPL of 76 dB at a distance of 1 meter from the pillow speaker.

Copyright National Electrical Manufacturers Association
Provided by IHS under license with NEMA
No reproduction or networking permitted without license from IHS
Not for Resale

4.9.3 Test Procedure

a. Connect the rms voltmeter to the patient station speaker or pillow speaker terminals;
b. Record the reading from the rms voltmeter;
c. Configure the switchable load to connect the dummy load (disconnecting the pink-noise generator and amplifier); and
d. Record the reading from the rms voltmeter.

4.9.4 Calculation of The Mode B S/N (Pillow Speaker)

a. The specification, from 2.5.2, is 35 dB;
b. The S/N = 20 log times (result 4.9.3b/result 4.9.3d); and
c. The S/N shall be equal to or greater than 35 dB.

NEMA Standard 5-9-1991.

Copyright National Electrical Manufacturers Association
Provided by IHS under license with NEMA
No reproduction or networking permitted without license from IHS

Not for Resale

NEMA STANDARDIZATION

The purpose of NEMA Standards, their classification and status are set forth in certain clauses of the NEMA *Standardization Policies and Procedures* manual and are referenced below:

Purpose of Standards

National Electrical Manufacturers Association Standards are adopted in the public interest and are designed to eliminate misunderstandings between the manufacturer and the purchaser and to assist the purchaser in selecting and obtaining the proper product for their particular needs. Existence of a National Electrical Manufacturers Association Standard does not in any respect preclude any member or nonmember from manufacturing or selling products not conforming to the standard.

(Standardization Policies and Procedures, p. 1)

Definition of a Standard

A standard of the National Electrical Manufacturers Association defines a product, process or procedure with reference to one or more of the following: nomenclature, composition, construction, dimensions, tolerances, safety, operating characteristics, performance, rating, testing, and the service for which they are designed.

(Standardization Policies and Procedures, p. 2)

Dimensions

Where dimensions are given for interchangeability purposes, alternate dimensions satisfying the other provisions of the Standards Publication may be capable of otherwise equivalent performance.

(Standardization Policies and Procedures, p. 8)

Categories of Standards

National Electrical Manufacturers Association Standards are of three classes:

1. NEMA Standard, which relates to a product, process or procedure commercially standardized and subject to repetitive manufacture, which standard has been approved by at least 90 percent of the members of the Subdivision eligible to vote thereon;
2. Suggested Standard for Future Design, which may not have been regularly applied to a commercial product, but which suggests a sound engineering approach to future development, which standard has been approved by at least two-thirds of the members of the Subdivision eligible to vote thereon.
3. Adoptive Standard, which is adopted in whole or in part from the standards of another organization, either domestic, regional, or international.

(Standardization Policies and Procedures, pp 7 & 16)

Authorized Engineering Information

Authorized Engineering Information consists of explanatory data and other engineering information of an informative character not falling within the classification of NEMA Standard or Suggested Standard for Future Design, which standard has been approved by at least two-thirds of the members of the Subdivision eligible to vote on the standard.

(Standardization Policies and Procedures, pp. 7 & 16)

Official Standards Proposal

An Official Standards Proposal is an official draft of a proposed standard which is formally recommended to an outside organization(s) for consideration, comment and/or approval, and which has been approved by at least 90 percent of the members of the Subdivision eligible to vote thereon. *(Standardization Policies and Procedures, pp 7 & 16)*

Identification of Status

Standards in NEMA Standards Publications are identified in the foreword or following each standard as "NEMA Standard" or "Suggested Standard for Future Design." These indicate the status of the standard. These words are followed by a date which indicates when the standard was adopted in its present form by the Association.

The material identified as "Authorized Engineering Information" and "Official Standards Proposal" is designated similarly.

July 17, 1990

Copyright National Electrical Manufacturers Association
Provided by IHS under license with NEMA
No reproduction or networking permitted without license from IHS
Not for Resale

HOSPITAL COMMUNICATIONS SECTION
OF THE
NATIONAL ELECTRICAL MANUFACTURERS ASSOCIATION

MEMBER COMPANIES

American Zettler, Inc.
Aliso Viejo, CA 92656

Cornell Electronic Products, Inc.
Milwaukee, WI 53223

Dukane Corporation
St. Charles, IL 60174

Edwards
A Unit of General Signal
Norwalk, CT 06851

Executone Information Systems, Inc.
Scottsdale, AZ 85260

Faraday, Inc.
Tecumseh, MI 49286

Fisher Berkeley Corporation
Oakland, CA 94623

Hill-Rom Company, Inc.
Batesville, IN 47006

Jeron Electronic Systems, Inc.
Chicago, IL 60660

Medical Communications Systems, Inc.
Hickory Hills, IL 60457

Ohmeda Medical Engineering
Norcross, GA 30071

Rauland-Borg Corporation
Skokie, IL 60076-2951

Tektone Sound & Signal Manufacturing, Inc.
Lake Park, FL 33403

Copyright National Electrical Manufacturers Association
Provided by IHS under license with NEMA
No reproduction or networking permitted without license from IHS
Not for Resale