A 45 01
A 41 01

National Electrical Manufacturers Association
2101 L Street, N.W. Suite 300
Washington, D.C. 20037 (202) 457-8400

PROPOSED, NEW AND REVISED STANDARDS

April 6, 1988

TO ALL REPRESENTATIVES OF MEMBER COMPANIES IN THE RENEWAL PARTS SECTION

Subject: NEMA Standards Publication No. **RP 1-1981**, *Renewal Parts for Motors and Generators (Performance, Selection and Maintenance)*

Dear Representative:

At its meeting on October 21, 1987, the Codes and Standards Committee reaffirmed the subject publication with the attached revision.

Additional copies of RP 1-1981 (R 1987) are available for $7.00.

Sincerely yours,

Krystyna McIver

Krystyna McIver
NEMA Standards Publications Editor

cc: All Known Holders of RP 1-1981

Copyright National Electrical Manufacturers Association
Provided by IHS under license with NEMA
No reproduction or networking permitted without license from IHS
Not for Resale

NEMA RP 1-1981 (R 1987)

RP 1

RENEWAL PARTS FOR MOTORS AND GENERATORS (PERFORMANCE, SELECTION AND MAINTENANCE)

Published by

National Electrical Manufacturers Association
2101 L Street, N.W.
Washington, D.C. 20037

© 1988 by National Electrical Manufacturers Association

Copyright National Electrical Manufacturers Association
Provided by IHS under license with NEMA
No reproduction or networking permitted without license from IHS
Not for Resale

RP 1-81 6470247 0003691 3

STANDARDS PUBLICATION/NO. RP 1-1981

A-45-01
A-47-01

nema

Renewal Parts for Motors and Generators (Performance, Selection and Maintenance)

NEMA

NATIONAL ELECTRICAL MANUFACTURERS ASSOCIATION ■ 2101 L STREET, N.W., WASHINGTON, D.C. 20037

Copyright National Electrical Manufacturers Association
Provided by IHS under license with NEMA
No reproduction or networking permitted without license from IHS
Not for Resale

TABLE OF CONTENTS

		Page
	FOREWORD	iii
	SCOPE	iii
Section 1	DEFINITIONS	
	1.1 Equipment	1
	1.2 Renewal Parts	1
Section 2	CLASSIFICATIONS	
	2.1 Horsepower	7
	2.2 Applications	7
	2.3 Electrical Type	8
	2.4 Environmental and Cooling	11
	2.5 Speed	14
	2.6 Rating, Performance, and Test	15
	2.7 Complete Machines	16
	2.8 Insulation Systems	17
	2.9 Terminals and Abbreviations	17
	2.10 Rotation	19
	2.11 Miscellaneous	20
Section 3	MAINTENANCE	
	3.1 Fundamentals of Electricity	21
	3.2 Inspection	22
	3.3 Direct-Current Motors and Generators and Repulsion-Induction Motors	25
	3.4 Induction Motors	29
	3.5 Synchronous Motors and Generators	31
	3.6 Cleaning and Varnishing Windings	32
	3.7 Lubrication	34
	3.8 Brushes	38
	3.9 Balancing	39
	3.10 Belts, Gears and Pinions	41
Section 4	PERFORMANCE	
	4.1 Coils	42
	4.2 Commutators and Assembled Segments	43
Section 5	WINDING SUPPLIES FOR ALTERNATING- AND DIRECT-CURRENT MOTORS AND GENERATORS	
	5.1 Introduction	44
	5.2 Classes of Winding Supplies	44
	5.3 Partial Sets of Winding Supplies	44
	5.4 Information Needed on Orders	44
	5.5 Glossary	45
Section 6	GUIDES OF RECOMMENDED RENEWAL PARTS FOR MAINTAINING CONTINUOUS OPERATION OF MOTORS AND GENERATORS	
	6.1 Introduction	46

(continued)

Copyright National Electrical Manufacturers Association
Provided by IHS under license with NEMA
No reproduction or networking permitted without license from IHS
Not for Resale

TABLE OF CONTENTS (continued)

6.2 Guide No. 1 for Direct-Current Motors and Generators 46
6.3 Guide No. 2 for Alternating-Current Squirrel-Cage Motors 47
6.4 Guide No. 3 for Alternating-Current Wound-Rotor Motors 47
6.5 Guide No. 4 for Synchronous Motors and Generators 47

Section 7 PRESERVATION OF RENEWAL PARTS FOR ELECTRICAL ROTATING APPARATUS

7.1 Purpose 48
7.2 Storage Conditions 48
7.3 Ferrous and Nonferrous Parts 48
7.4 Copper or Brass Parts 48
7.5 Parts With Electrical Insulation 48
7.6 Barriers 48
7.7 Packing 48

Section 8 RENEWAL PARTS BULLETINS

8.1 Purpose 49
8.2 Renewal Parts Bulletin 49

Illustrations FIGURES

Figure 2-1 Probe 12
Figure 2-2 Probe 12
Figure 3-1 Types of Direct Current (DC) 21
Figure 3-2 Types of Alternating Current (AC) 21
Figure 3-3 Smooth Hard Finish Insulating Commutator Vee Rings 28
Figure 3-4 Baking Oven 33
Figure 3-5 Oil Levels at Standstill and at Operation 34
Figure 3-6 Sleeve Bearing 34
Figure 3-7 Oil Seal 36
Figure 3-8 Oil Seal 37
Figure 3-9 Oil Seal 37
Figure 3-10 Oil Seal 37
Figure 3-11 Dynamic Balancing 40

TABLES

Table 2-1 Abbreviations 18
Table 4-1 Copper Bar Specifications 42

Copyright National Electrical Manufacturers Association
Provided by IHS under license with NEMA
No reproduction or networking permitted without license from IHS
Not for Resale

Foreword

This Standards Publication is intended to assist those responsible for maintenance and repair of electric motors and generators.

Effective maintenance of motors and generators will keep their performance up to standard and is essential for competitive uninterrupted production. Proper maintenance embraces stocking of spare or renewal parts, systematic inspection, correction and repair of equipment to minimize unscheduled shutdowns, improving the original performance characteristics of the equipment, and extending its normal service life.

To make routine repairs quickly and efficiently, it is vital that renewal parts be stocked for the equipment in operation. At the time rotating electrical equipment is purchased, complete renewal parts lists, stocking recommendations, and other maintenance data should be obtained from the manufacturer or distributor. A guide for stocking renewal parts for usual circumstances and operating conditions comparable to the original part is covered in Section 6.

In major repairs use of renewal parts, which incorporate intervening advances in technology, the performance of the original equipment can be improved directly in proportion to technological progress. Thus, former equipment can be brought up to standard with currently available new motors.

The repair information given herein applies to most motors and generators regardless of size. It should be realized that the size of the equipment to be repaired will determine the methods and the type of equipment needed for a particular repair operation.

Comments and suggested revisions should be sent to:

Manager, Engineering Department
National Electrical Manufacturers Association
2101 L Street, N.W.
Washington, DC 20037

Scope

This Standards Publication covers definitions, classification, maintenance, performance, and repair of alternating- and direct-current motors and generators within the product scope of the NEMA Motor and Generator Section and motors used in mining and industrial electric locomotives.

Copyright National Electrical Manufacturers Association
Provided by IHS under license with NEMA
No reproduction or networking permitted without license from IHS
Not for Resale

Section 1
DEFINITIONS

1.1 EQUIPMENT

1.1.1 Motor

A machine used for the purpose of producing mechanical power or mechanical torque or force by means of a rotating shaft or through linear motion.

NEMA Standard 9-17-1981.

1.1.2 Generator

A machine that converts mechanical power into electrical power. This is done by rotating an armature which contains and moves conductors through a magnetic field, thus inducing an electromotive force in the moving conductors.

NEMA Standard 9-17-1981.

1.1.3 Motor-Generator Set

A machine that consists of one or more motors mechanically coupled to one or more generators.

NEMA Standard 9-17-1981.

1.2 RENEWAL PARTS

1.2.1 Renewal Parts

Those parts that can be used to replace worn components of motors and generators during maintenance or repair operations.

NEMA Standard 9-17-1981.

1.2.2 Air Baffle (Air Guide) (Air Duct)

A structure designed to direct the flow of air inside or through a machine.

NEMA Standard 9-17-1981.

1.2.3 Armature

The complete assembly of the armature winding with the core, commutator, if any, and supports. Its primary function is to cut magnetic lines of force.

NEMA Standard 9-17-1981.

1.2.4 Armature Band

A flat or wire band, usually metallic, applied to the windings of a rotating armature to restrain and hold the coils so as to counteract the effect of centrifugal force during rotation. Armature bands can arch bind the coils. They can be used on the end windings or over the coils within the core.

NEMA Standard 9-17-1981.

1.2.5 Armature Coil

A unit of the armature winding composed of one or more insulated conductors.

NEMA Standard 9-17-1981.

1.2.6 Armature Spider (Armature Sleeve) (Armature Quill)

A support upon which the armature laminations are mounted and which in turn is mounted on the shaft.

NEMA Standard 9-17-1981.

1.2.7 Armature Winding

The winding in which alternating voltage is generated by virture or relative motion with respect to a magnetic flux field.

NEMA Standard 9-17-1981.

1.2.8 Armature Winding Equalizer (Armature Winding Cross Connection)

An electric connection to normally equal potential points in an armature circuit having more than two parallel circuits.

NEMA Standard 9-17-1981.

1.2.9 Axle Bearing

A bearing which supports a portion of the motor weight on the driving axle.

NEMA Standard 9-17-1981.

1.2.10 Axle Bearing Cap

A member bolted to the motor frame supporting the bottom half of the axle bearing.

NEMA Standard 9-17-1981.

1.2.11 Axle Bearing Cap Cover

A hinged or otherwise applied cover for the waste and oil chamber of the axle bearing.

NEMA Standard 9-17-1981.

1.2.12 Bearing

A part which supports the shaft and within which the shaft rotates.

NEMA Standard 9-17-1981.

1.2.13 Bearing Bracket

A bracket secured to the frame to support the bearing, but including no part thereof.

NEMA Standard 9-17-1981.

Copyright National Electrical Manufacturers Association
Provided by IHS under license with NEMA
No reproduction or networking permitted without license from IHS
Not for Resale

1.2.14 Bearing Cap (Bearing Bracket Cap)

A cover for the bearing enclosure of a bearing bracket type machine, or the removable upper half of the enclosure for a bearing.

NEMA Standard 9-17-1981.

1.2.15 Bearing Cartridge

A complete enclosure for a ball or roller bearing, separate from the bearing bracket or end shield.

NEMA Standard 9-17-1981.

1.2.16 Bearing Dust Cap

A removable cover to prevent the entry of foreign material into the bearing.

NEMA Standard 9-17-1981.

1.2.17 Bearing Locknut

A nut which holds a ball or roller bearing in place on the shaft.

NEMA Standard 9-17-1981.

1.2.18 Bearing Lock Washer

A washer between the bearing locknut and the bearing which prevents the locknut from turning.

NEMA Standard 9-17-1981.

1.2.19 Bearing Pedestal

A bearing support, mounted separately from the machine frame, but not including the bearing.

NEMA Standard 9-17-1981.

1.2.20 Bearing Pedestal Cap

The top part of a bearing pedestal.

NEMA Standard 9-17-1981.

1.2.21 Brush

A conducting member which maintains sliding electrical contact between two relatively moving parts of a machine. It brushes the commutator in such a way as to take off the generated electromotive force.

NEMA Standard 9-17-1981.

1.2.22 Brushholder

A device which holds the brush in position.

NEMA Standard 9-17-1981.

1.2.23 Brushholder Finger

That part of the brushholder which presses against the brush and holds it in contact with the commutator or collector ring.

NEMA Standard 9-17-1981.

1.2.24 Brushholder Spring

That part of the brushholder which provides pressure to hold the brush against the collector ring or commutator.

NEMA Standard 9-17-1981.

1.2.25 Brushholder Stud

An intermediate member between the brushholder and the supporting structure.

NEMA Standard 9-17-1981.

1.2.26 Brushholder Stud Insulation

An assembly of insulation material which insulates the brushholder or stud from the supporting structure.

NEMA Standard 9-17-1981.

1.2.27 Brushholder Yoke

A rocker arm, ring, quadrant or other support for maintaining the brushholders or brushholder studs in their relative positions.

NEMA Standard 9-17-1981.

1.2.28 Capacitor Enclosure

The case in which the capacitor is mounted.

NEMA Standard 9-17-1981.

1.2.29 Capacitor Mounting Strap

A device by means of which the capacitor is affixed to the motor.

NEMA Standard 9-17-1981.

1.2.30 Centrifugal Mechanism (Governor)

An assembly of weights, springs and necessary linkage which operates the starting switch assembly or short-circuiting device at a predetermined motor speed.

NEMA Standard 9-17-1981.

1.2.31 Centrifugal Mechanism Pin (Governor Pin)

A component of the linkage between the centrifugal mechanism weights and the short-circuiting device.

NEMA Standard 9-17-1981.

1.2.32 Centrifugal Mechanism Spring (Governor Spring)

A spring which opposes the centrifugal action of the centrifugal mechanism weights in determining the motor speed at which the switch or short-circuiting device is actuated.

NEMA Standard 9-17-1981.

Copyright National Electrical Manufacturers Association
Provided by IHS under license with NEMA
No reproduction or networking permitted without license from IHS
Not for Resale

1.2.33 Centrifugal Mechanism Weights (Governor Weights)

Moving parts of the centrifugal mechanism assembly that are acted upon by centrifugal force.

NEMA Standard 9-17-1981.

1.2.34 Collector

An assembly of collector rings, individually insulated, on a supporting structure.

NEMA Standard 9-17-1981.

1.2.35 Collector Ring (Slip Ring)

A metal ring suitably mounted on an electric machine which (through stationary brushes bearing thereon) conducts current into or out of the rotating member.

NEMA Standard 9-17-1981.

1.2.36 Commutator

A cylindrical ring or disc assembly of conducting members, individually insulated in a supporting structure, with an exposed surface for contact with current-collecting brushes.

NEMA Standard 9-17-1981.

1.2.37 Commutator Bore

The diameter of the finished hole in the core which accommodates the armature shaft.

NEMA Standard 9-17-1981.

1.2.38 Commutator Brush Track Diameter

That diameter of the commutator segment assembly that after finishing on the armature is in contact with the brushes.

NEMA Standard 9-17-1981.

1.2.39 Commutator Core

The complete assembly of all of the retaining members of a commutator.

NEMA Standard 9-17-1981.

1.2.40 Commutator Extension

That portion of the core which extends beyond the commutator segment assembly.

NEMA Standard 9-17-1981.

1.2.41 Commutator Inspection Cover

A hinged or otherwise attached part which can be moved to provide access to commutator and brush rigging for inspection and adjustment.

NEMA Standard 9-17-1981.

1.2.42 Commutator Insulating Segments

The insulating members between adjacent commutator segments.

NEMA Standard 9-17-1981.

1.2.43 Commutator Insulating Tube

The insulation between the underside of the commutator segment assembly and the core.

NEMA Standard 9-17-1981.

1.2.44 Commutator Nut

The retaining member which is used in combination with a vee ring and threaded shell to clamp the segment assembly.

NEMA Standard 9-17-1981.

1.2.45 Commutator Riser

That portion of the commutator segment assembly which is larger than the brush track diameter.

NEMA Standard 9-17-1981.

1.2.46 Commutator Segments (Commutator Bars)

Metal current-carrying members which are insulated from one another by insulating segments and which make contact with the brushes.

NEMA Standard 9-17-1981.

1.2.47 Commutator Segment Assembly

A cylindrical ring or disc assembly of commutator segments and insulating segments which are bound and ready for installation. The binding consists of wire, temporary assembly ring, shrink rings or other means.

NEMA Standard 9-17-1981.

1.2.48 Commutator Shell

The support on which the component parts of the commutator are mounted. The commutator can be mounted on the shaft, on a commutator spider, integral with a commutator spider or other mounting support.

NEMA Standard 9-17-1981.

1.2.49 Commutator Shell Insulation

The insulation between the under (or in the case of a disc commutator, the back) side of the commutator assembled segments and the commutator shell.

NEMA Standard 9-17-1981.

Copyright National Electrical Manufacturers Association
Provided by IHS under license with NEMA
No reproduction or networking permitted without license from IHS
Not for Resale

1.2.50 Commutator Shrink Ring

A member which holds the commutator segment assembly together and in place by being shrunk on an outer diameter of and insulated from the commutator segment assembly.

NEMA Standard 9-17-1981.

1.2.51 Commutator Vee Ring

The retaining member which, in combination with the commutator shell, clamps or binds the commutator segments together.

NEMA Standard 9-17-1981.

1.2.52 Commutator Vee Ring Insulation

The insulation between the commutator segment assembly and the core.

NEMA Standard 9-17-1981.

1.2.53 Commutator Vee Ring Extension

That portion of the vee ring insulation which extends beyond the commutator segment assembly.

NEMA Standard 9-17-1981.

1.2.54 Conduit Box

A box adapted for connection of conduit to facilitate wiring, making electrical connections and mounting wiring devices.

NEMA Standard 9-17-1981.

1.2.55 Core End Plate (End Plate) (Flange)

A member at each end of the laminations which supports and tends to prevent spreading of the laminations.

NEMA Standard 9-17-1981.

1.2.56 Cover Plate

An essentially flat removable part used as a closure for an opening.

NEMA Standard 9-17-1981.

1.2.57 Cradle Base

A device which supports the machine at the bearing housings.

NEMA Standard 9-17-1981.

1.2.58 Cushion

A resilient device interposed between the motor and the cradle base.

NEMA Standard 9-17-1981.

1.2.59 Cushion Clamp

A device for securing the cushion to the supporting member.

NEMA Standard 9-17-1981.

1.2.60 End Play Washers

Washers of various thicknesses and materials used to control axial position of the shaft.

NEMA Standard 9-17-1981.

1.2.61 End Shield

A shield secured to the frame and adapted to protect the windings and to support the bearing, but including no part thereof.

NEMA Standard 9-17-1981.

1.2.62 Fan

The part which provides an air stream for ventilating the machine.

NEMA Standard 9-17-1981.

1.2.63 Fan Cover

An enclosure for the fan which directs the air of an enclosed, fan-cooled machine.

NEMA Standard 9-17-1981.

1.2.64 Field Coil

A unit of a field winding to be mounted on a field pole to magnetize it. A field coil is a shunt coil, a series coil, a combination of the two, or a commutating coil.

NEMA Standard 9-17-1981.

1.2.65 Field Frame

A stationary supporting structure for field poles and field coils, usually forming a part of the magnetic circuit of a direct-current machine.

NEMA Standard 9-17-1981.

1.2.66 Field Pole

A structure of magnetic material on which a field coil can be mounted. There are two types of field poles: main and commutating.

NEMA Standard 9-17-1981.

1.2.67 Laminations

Steel punchings used to form a magnetic circuit.

NEMA Standard 9-17-1981.

1.2.68 Moving Contact Assembly

That part of the starting switch assembly which is actuated by the centrifugal mechanism.

NEMA Standard 9-17-1981.

Copyright National Electrical Manufacturers Association
Provided by IHS under license with NEMA
No reproduction or networking permitted without license from IHS
Not for Resale

1.2.69 Oil Cup

An attachment to the oil reservoir for adding oil and controlling its upper level.

NEMA Standard 9-17-1981.

1.2.70 Oil-Overflow Plug

An attachment to the oil reservoir which can be opened to allow excess oil to escape, to inspect the oil level, or to add oil.

NEMA Standard 9-17-1981.

1.2.71 Oil Ring

A ring encircling the shaft in such a manner as to bring oil from the oil reservoir to the sleeve bearing and shaft.

NEMA Standard 9-17-1981.

1.2.72 Oil Ring Retainer

A guard to keep the oil ring in position on the shaft.

NEMA Standard 9-17-1981.

1.2.73 Oil Seal

A part or combination of parts for the purpose of retaining the lubricant in the bearing chamber.

NEMA Standard 9-17-1981.

1.2.74 Oil Slinger

A rotating member mounted on the shaft, or integral with it, which expels oil by centrifugal force and tends to prevent it from creeping along adjacent surfaces.

NEMA Standard 9-17-1981.

1.2.75 Oil Well Cover

A cover for the oil reservoir.

NEMA Standard 9-17-1981.

1.2.76 Oil Wick

Wool, cotton or similar material used to bring oil to the journal surface by capillary action.

NEMA Standard 9-17-1981.

1.2.77 Packing Gland

A device, attached to a motor or other apparatus at the point through which the cable enters, so constructed as to prevent entrance or exit of liquids and/or gases.

NEMA Standard 9-17-1981.

1.2.78 Pole Shoe

The portion of a field pole facing the armature, which serves to shape the air gap and control its reluctance. In round rotor fields, the effective pole shoe includes the teeth which hold the field coils and wedges in place.

NEMA Standard 9-17-1981.

1.2.79 Rotor

The rotating member of a machine, with shaft.

NEMA Standard 9-17-1981.

1.2.80 Rotor Spider (Rotor Sleeve) (Rotor Quill)

A support upon which the rotor laminations are mounted and which in turn is mounted on the shaft.

NEMA Standard 9-17-1981.

1.2.81 Shaft

That part which supports the rotating member and is in turn supported by bearings in which it rotates.

NEMA Standard 9-17-1981.

1.2.82 Short Circuiter

A device designed to short circuit the commutator bars when the motor has attained a predetermined speed in some forms of single-phase commutator type motors.

NEMA Standard 9-17-1981.

1.2.83 Slot Wedge

A strip of material for insertion in the top of the armature, rotor or stator slot in such a manner as to lock the coil in place.

NEMA Standard 9-17-1981.

1.2.84 Spring Barrel

The part which retains and locates the short circuiter.

NEMA Standard 9-17-1981.

1.2.85 Starting Switch Assembly

The make-and-break contacts, mechanical linkage and mounting parts necessary for starting or running, or both starting and running, split-phase and capacitor motors. The starting-switch assembly consists of a stationary-contact assembly and a contact that moves the rotor.

NEMA Standard 9-17-1981.

1.2.86 Stationary Contact Assembly

The fixed part of the starting switch assembly.

NEMA Standard 9-17-1981.

Copyright National Electrical Manufacturers Association
Provided by IHS under license with NEMA
No reproduction or networking permitted without license from IHS
Not for Resale

1.2.87 Stator

The portion of a machine which contains the stationary parts of the magnetic circuit with their associated windings.

NEMA Standard 9-17-1981.

1.2.88 Stator Coil

A unit of the stator winding composed of one or more insulated conductors.

NEMA Standard 9-17-1981.

1.2.89 Stator Core

Consists of completely assembled laminations ready for windings.

NEMA Standard 9-17-1981.

1.2.90 Stator Frame

The supporting structure for the stator parts.

NEMA Standard 9-17-1981.

1.2.91 Switch Sleeve

A component of the linkage between the centrifugal mechanism and the starting-switch assembly.

NEMA Standard 9-17-1981.

1.2.92 Terminal Board

An insulating mounting for terminal connection.

NEMA Standard 9-17-1981.

1.2.93 Terminal Board Cover

A closure which permits access to the terminal board and prevents incidental contacts with the terminals.

NEMA Standard 9-17-1981.

1.2.94 Terminal Connector

A connector for attaching a conductor to a lead, terminal block or stud of electrical apparatus.

NEMA Standard 9-17-1981.

1.2.95 Thermal Protector

A protective device for assembly as an integral part of the machine which, when properly applied, protects the machine against dangerous overheating due to overload and, in a motor, failure to start. The thermal protector consists of one or more temperature sensing elements integral with the machine and a control device external to the machine.

NEMA Standard 9-17-1981.

1.2.96 Thermal Protector Enclosure

The enclosure component of a thermal protector.

NEMA Standard 9-17-1981.

1.2.97 Thrust Collar

The part of the shaft or rotor that contacts the thrust bearing and generally limits the axial motion of the shaft.

NEMA Standard 9-17-1981.

1.2.98 Winding Kit

Consists of coils, equalizers if required, and the class of winding supplies specified, but does not include field coils or material for them.

NEMA Standard 9-17-1981.

1.2.99 Winding Shield

A shield secured to the frame to protect the windings but not to support the bearing.

NEMA Standard 9-17-1981.

Copyright National Electrical Manufacturers Association
Provided by IHS under license with NEMA
No reproduction or networking permitted without license from IHS
Not for Resale

Section 2
CLASSIFICATIONS

2.1 HORSEPOWER

2.1.1 Fractional-Horsepower Motor

A fractional-horsepower motor is either:

1. a motor built in a frame which has a 2-digit frame number in accordance with paragraph A of MG 1-11.01; or,
2. a motor built in a frame smaller than that frame of an integral-horsepower motor[1] (see MG 1-1.02) which has a continuous rating of 1 horsepower, open construction, at 1700-1800 rpm.

NEMA Standard 9-17-1981.

2.1.2 Integral-Horsepower Motor

An alternating-current integral-horsepower motor is a motor:

1. built in a frame which has a 3-digit frame number in the 680 and smaller series in accordance with paragraph B of MG 1-11.01; and,
2. built in a frame having an open continuous rating of 1 horsepower at 1700-1800 rpm or in a larger frame but no larger than the frame required for the ratings given in paragraph D of MG 1-10.32 for induction motors.

A direct-current integral-horsepower motor is either:

1. a motor built in a frame which has a 3-digit frame number in the 680 and smaller series in accordance with paragraph B of MG 1-11.01; or,
2. a motor built in a frame having an open continuous rating of 1 horsepower at 1700-1800 rpm or in a larger frame but no larger than the frame required for the ratings given in paragraph B of MG 1-10.62 for direct-current motors.

NEMA Standard 9-17-1981.

2.2 APPLICATIONS

2.2.1 General-Purpose Alternating-Current Motor

A general-purpose alternating-current motor is an induction motor, rated 200 horsepower and less, which incorporates all of the following:

1. Is of open construction;
2. Is continuously rated;
3. Has a service factor in accordance with MG 1-12.47;
4. Has a Class A insulation system with a temperature rise as specified in MG 1-12.41 for fractional-horsepower motors or has a Class B insulation system with a temperature rise as specified in MG 1-12.42 for integral-horsepower motors.

It is designed in standard ratings with standard operating characteristics and mechanical construction for use under usual service conditions without restriction to a particular application or type of application.

NEMA Standard 9-17-1981.

2.2.2 General-Purpose Direct-Current Fractional-Horsepower Motor

A general-purpose direct current fractional-horsepower motor is a fractional-horsepower motor of mechanical construction suitable for general use under usual service conditions and has ratings, constructional and performance characteristics applying to direct-current fractional-horsepower motors as given in Parts 10, 11, 12 and 14 of MG 1-1978.

NEMA Standard 9-17-1981.

2.2.3 Industrial Direct-Current Motor

An industrial direct-current motor is an integral-horsepower motor of mechanical construction suitable for industrial use under usual service conditions.

NEMA Standard 9-17-1981.

2.2.4 Industrial Direct-Current Generator

An industrial direct-current generator is a generator of mechanical construction suitable for industrial use under usual service conditions and has ratings, constructional and performance characteristics applying to direct-current generators as given in the standards in Parts 11 and 15 of MG 1-1978.

NEMA Standard 9-17-1981.

2.2.5 Definite-Purpose Motor

A definite-purpose motor is any motor designed in standard ratings with standard operating characteristics or mechanical construction for use under service conditions other than usual or for use on a particular type of application.

NEMA Standard 9-17-1981.

[1] This paragraph number is contained in NEMA Standards Publication No. MG 1-1978, *Motors and Generators*. Hereinafter, this Standards Publication will cite only the paragraph number contained in MG 1-1978 without repeating the entire title.

Copyright National Electrical Manufacturers Association
Provided by IHS under license with NEMA
No reproduction or networking permitted without license from IHS
Not for Resale

2.2.6 General Industrial Motors (Large Apparatus—DC Motors)

These motors are designed for all general industrial service (excepting metal rolling mill service) and may be designed, when specified, for operation at speeds above base speed by field weakening as indicated in Table 23-3 of MG 1-23.11 and Table 23-5 of MG 1-23.12.

Authorized Engineering Information 9-17-1981.

2.2.7 Metal Rolling Mill Motors (Large Apparatus—DC Motors)

These motors are designed particularly for metal rolling mill service (except for reversing hot-mill service, see MG 1-23.03) and are known as either Class N or Class S metal rolling mill motors. They may be designed for operation with a single direction of rotation (nonreversing) or, if required, they may be designed for either direction of rotation (reversing). These motors differ in design from general industrial motors because of the requirements for this service which are as follows:

1. Heavier mechanical construction;
2. Higher momentary overload (see MG 1-23.41);
3. Closer speed regulation.

A. Class N Metal Rolling Mill Motors

Class N metal rolling mill motors are normally designed for operation at a given base speed but, when specified, may be designed for operation at speeds by field weakening as indicated in Table 23 of MG 1-23.11 and Table 23-5 of MG 1-23.12.

B. Class S Metal Rolling Mill Motors

Still higher speeds than those attained for Class N metal rolling mill motors by field weakening can be obtained, when specified, on metal rolling mill motors by using higher strength material, additional banding and bracing. Such motors are known as Class S metal rolling mill motors. The maximum speeds recommended for operation of these motors are given in Table 23-4 of MG 1-23.11 and Table 23-6 of MG 1-23.12.

Authorized Engineering Information 9-17-1981.

2.2.8 Reversing Hot Mill Motors (Large Apparatus—DC Motors)

These motors are designed particularly for application to reversing hot mills, such as blooming and slabbing mills. They are characterized by:

1. No continuous overload capability;
2. A mechanical construction suitable for rapid reversal and for the sudden application of heavy loads;
3. High momentary overload capacity (see paragraph D of MG 1-23.41).

Authorized Engineering Information 9-17-1981.

2.2.9 Special-Purpose Motor

A special-purpose motor is a motor with special operating characteristics or special mechanical construction, or both, designed for a particular application and not falling within the definition of a general-purpose or definite-purpose motor.

NEMA Standard 9-17-1981.

2.3 ELECTRICAL TYPE

2.3.1 Alternating-Current Motors

Alternating-current motors are of three general types—induction, synchronous, and series—and are defined as follows:

A. Induction Motor

An induction motor is an alternating-current motor in which a primary winding on one member (usually the stator) is connected to the power source and a polyphase secondary winding or a squirrel-cage secondary winding on the other member (usually the rotor) carries induced current.

1. Squirrel-Cage Induction Motor

A squirrel-cage induction motor is one in which the secondary circuit consists of a squirrel-cage winding suitably disposed in slots in the secondary core.

2. Wound-Rotor Induction Motor

A wound-rotor induction motor is an induction motor in which the secondary circuit consists of a polyphase winding or coils whose terminals are either short-circuited or closed through suitable circuits.

B. Synchronous Motor

A synchronous motor is a synchronous machine which transforms electrical power into mechanical power.

C. Part-Winding-Start Motor

A part-winding-start induction or synchronous motor is one arranged for starting by first energizing part of its primary (armature) winding and, subsequently, energizing the remainder of this

Copyright National Electrical Manufacturers Association
Provided by IHS under license with NEMA
No reproduction or networking permitted without license from IHS
Not for Resale

winding in one or more steps. The purpose is to reduce the initial values of the starting current drawn or the starting torque developed by the motor. A standard part-winding-start induction motor is arranged so that one-half of its primary winding can be energized initially and, subsequently, the remaining half can be energized, both halves then carrying the same current.

D. SERIES-WOUND MOTOR

A series-wound motor is a motor in which the field circuit and armature circuit are connected in series.

NEMA Standard 9-17-1981.

2.3.2 Polyphase Motors

Alternating-current polyphase motors are of the squirrel-cage, wound-rotor, or synchronous types.

Design Letters or Polyphase Squirrel-Cage Integral-Horsepower Motors

Polyphase squirrel-cage integral-horsepower induction motors are one of the following:

DESIGN A

A Design A motor is a squirrel-cage motor designed to withstand full-voltage starting and developing locked-rotor torque as shown in MG 1-12.37, pull-up torque as shown in MG 1-12.39, breakdown torque as shown in MG 1-12.38, with locked-rotor current higher than the values shown in MG 1-12.34 for 60 Hertz and MG 1-12.35 for 50 Hertz, and having a slip at rated load of less than 5 percent.*

DESIGN B

A Design B motor is a squirrel-cage motor designed to withstand full-voltage starting, developing locked-rotor, breakdown, and pull-up torques adequate for general application as specified in MG 1-12.37, MG 1-12.38 and MG 1-12.39, drawing locked-rotor current not to exceed the values shown in MG 1-12.34 for 60 Hertz and MG 1-12.35 for 50 Hertz, and having a slip at rated load of less than 5 percent.*

DESIGN C

A Design C motor is a squirrel-cage motor designed to withstand full-voltage starting, developing locked-rotor torque for special high-torque application up to the values shown in MG 1-12.37, pull-torque as shown in MG 1-12.39, breakdown torque up to the values shown in MG 1-12.38, with locked-rotor current not to exceed the values shown in MG 1-12.34 for 60 Hertz and MG 1-12.35 for 50 Hertz, and having a slip at rated load of less than 5 percent.

DESIGN D

A Design D motor is a squirrel-cage motor designed to withstand full-voltage starting, developing high locked-rotor torque as shown in MG 1-12.37, with locked-rotor current not greater than shown in MG 1-12.34 for 60 Hertz and MG 1-12.35 for 50 Hertz, and having a slip at rated load of 5 percent or more.

NEMA Standard 9-17-1981.

2.3.3 Single-Phase Motors

Alternating-current single-phase motors are usually induction or series motors although single-phase synchronous motors are available in the small ratings.

Authorized Engineering Information 9-17-1981.

Design Letters of Single-Phase Fractional-Horsepower Motors

DESIGN N

A Design N motor is a single-phase fractional-horsepower motor designed to withstand full-voltage starting and with a locked-rotor current not to exceed the values shown in MG 1-12.32.

DESIGN O

A Design O motor is a single-phase fractional-horsepower motor designed to withstand full-voltage starting and with a locked-rotor current not to exceed the values shown in MG 1-12.32.

Design Letters of Single-Phase Integral-Horsepower Motors

Single-phase integral-horsepower motors are one of the following:

DESIGN L

A Design L motor is a single-phase integral-horsepower motor designed to withstand full-voltage starting and to develop a breakdown torque as shown in MG 1-10.33 with a locked-rotor current not to exceed the values shown in MG 1-12.33.

* Motors with 10 or more poles may have slip slightly greater than 5 percent.

Authorized Engineering Information 9-17-1981.

Copyright National Electrical Manufacturers Association
Provided by IHS under license with NEMA
No reproduction or networking permitted without license from IHS
Not for Resale

DESIGN M

A Design M motor is a single-phase integral-horsepower motor designed to withstand full-voltage starting and to develop a breakdown torque as shown in MG 1-10.33 with a locked-rotor current not to exceed the values shown in MG 1-12.33.

Single-phase Squirrel-Cage Motors

Single-phase squirrel-cage induction motors are classified and defined as follows:

A. SPLIT-PHASE MOTOR

A split-phase motor is a single-phase induction motor equipped with an auxiliary winding, displaced in magnetic position from, and connected in parallel with, the main winding.

Unless otherwise specified, the auxiliary circuit is assumed to be opened when the motor has attained a predetermined speed. The term "split-phase motor," used without a qualification, describes a motor to be used without impedance other than that offered by the motor windings themselves, other types being separately defined.

(This paragraph is designated Authorized Engineering Information 9-17-1981.)

B. RESISTANCE-START MOTOR

A resistance-start motor is a form of split-phase motor having a resistance connected in series with the auxiliary winding. The auxiliary circuit is opened when the motor has attained a predetermined speed.

C. CAPACITOR MOTOR

A capacitor motor is a single-phase induction motor with a main winding arranged for direct connection to a source of power and an auxiliary winding connected in series with a capacitor. There are three types of capacitor motors, as follows:

1. CAPACITOR-START MOTOR

A capacitor-start motor is a capacitor motor in which the capacitor phase is in the circuit only during the starting period.

2. PERMANENT-SPLIT CAPACITOR MOTOR

A permanent-split capacitor motor is a capacitor motor having the same value of capacitance for both starting and running conditions.

3. TWO-VALUE CAPACITOR MOTOR

A two-value capacitor motor is a capacitor motor using different values of effective capacitance for the starting and running conditions.

D. SHADED-POLE MOTOR

A shaded-pole motor is a single-phase induction motor provided with an auxiliary short-circuited winding or windings displaced in magnetic position from the main winding.

Single-Phase Wound-Rotor Motors

Single-phase wound-rotor motors are defined and classified as follows:

E. REPULSION MOTOR

A repulsion motor is a single-phase motor which has a stator winding arranged for connection to a source of power and a rotor winding connected to a commutator. Brushes on the commutator are short-circuited and are placed so that the magnetic axis of the rotor winding is inclined to the magnetic axis of the stator winding. This type of motor has a varying-speed characteristic.

F. REPULSION-START INDUCTION MOTOR

A repulsion-start induction motor is a single-phase motor having the same windings as a repulsion motor, but at a predetermined speed the rotor winding is short-circuited or otherwise connected to give the equivalent of a squirrel-cage winding. This type of motor starts as a repulsion motor but operates as an induction motor with constant-speed characteristics.

G. REPULSION-INDUCTION MOTOR

A repulsion-induction motor is a form of repulsion motor which has a squirrel-cage winding in the rotor in addition to the repulsion motor winding. A motor of this type has either a constant-speed (see MG 1-1.30) or a varying-speed (see MG 1-1.31) characteristic.

NEMA Standard 9-17-1981.

2.3.4 Universal Motors

A universal motor is a series-wound motor designed to operate at approximately the same speed and output on either direct current or single-phase alternating current of a frequency not greater than 60 Hertz and approximately the same rms voltage.

A. SERIES-WOUND MOTOR

A series-wound motor is a commutator motor in which the field circuit and armature circuit are connected in series.

Copyright National Electrical Manufacturers Association
Provided by IHS under license with NEMA
No reproduction or networking permitted without license from IHS

Not for Resale

B. Compensated Series Motor

A compensated series motor is a series motor with a compensating field winding.

NEMA Standard 9-17-1981.

NOTE: The compensating field winding and the series field winding may be combined into one field winding.

Authorized Engineering Information 9-17-1981.

2.3.5 Direct-Current Motors

Direct-current motors are of three general types—shunt wound, series wound, and compound wound—and are defined as follows:

A. Shunt-Wound Motor

A shunt-wound motor is either a straight shunt-wound motor or a stabilized shunt-wound motor.

1. Straight Shunt-Wound Motor

A straight shunt-wound motor is a direct-current motor in which the field circuit is connected either in parallel with the armature circuit or to a separate source of excitation voltage. The shunt field is the only winding supplying field excitation.

2. Stabilized Shunt-Wound Motor

A stabilized shunt-wound motor is a direct-current motor in which the shunt field circuit is connected either in parallel with the armature circuit or to a separate source of excitation voltage and which also has a light series winding added to prevent a rise in speed or to obtain a slight reduction in speed with increase in load.

B. Series-Wound Motor

A series-wound motor is a motor in which the field circuit and armature circuit are connected in series.

C. Compound-Wound Motor

A compound-wound motor is a direct-current motor which has two separate field windings—one, usually the predominant field, connected as in a straight shunt-wound motor, and the other connected in series with the armature circuit.

D. Permanent Magnet Motor

A permanent magnet motor is a direct-current motor in which the field excitation is supplied by permanent magnets.

NEMA Standard 9-17-1981.

2.3.6 Direct-Current Generators

Direct-current generators are of two general types—shunt-wound and compound-wound—and are defined as follows:

A. Shunt-Wound Generator

A shunt-wound generator is a direct-current generator in which the field circuit is connected either in parallel with the armature circuit or to a separate source of excitation voltage.

B. Compound-Wound Generator

A compound-wound generator is a direct-current generator which has two separate field windings—one, usually the predominating field, connected as in a shunt-wound generator, and the other connected in series with the armature circuit.

NEMA Standard 9-17-1981.

2.4 ENVIRONMENTAL AND COOLING

2.4.1 Open Machine

An open machine is one having ventilating openings which permit passage of external cooling air over and around the windings of the machine. The term "open machine," when applied to large apparatus without qualification, designates a machine having no restriction to ventilation other than that necessitated by mechanical construction.

A. Dripproof Machine

A dripproof machine is an open machine in which the ventilating openings are constructed so that successful operation is not interrupted when drops of liquid or solid particles strike or enter the enclosure at any angle from 0 to 15 degrees downward from the verticle.[2]

B. Splash-Proof Machine

A splash-proof machine is an open machine in which the ventilating openings are so constructed that successful operation is not interfered with when drops of liquid or solid particles strike or enter the enclosure at any angle not greater than 100 degrees downward from the vertical.[2]

[2] A method for demonstrating successful operation is: (1) by exposing the machine, with the motor at rest, to a spray of water at the specified angle and at a rate of no greater than 1 inch per hour for 1 hour; and (2) after exposure, by subjecting the windings to a high-potential test of 50 percent of the normal high-potential test followed by a 15-minute no-load operation at rated voltage.

Authorized Engineering Information 9-17-1981.

Copyright National Electrical Manufacturers Association
Provided by IHS under license with NEMA
No reproduction or networking permitted without license from IHS
Not for Resale

C. SEMI-GUARDED MACHINE

A semi-guarded machine is an open machine in which part of the ventilating openings in the machine, usually in the top half, are guarded as in the case of a "guarded machine" but the others are left open.

D. GUARDED MACHINE

A guarded machine is an open machine in which all openings giving direct access to live metal or rotating parts (except smooth rotating surfaces) are limited in size by the structural parts or by screens, baffles, grilles, expanded metal or other means to prevent accidental contact with hazardous parts. Openings giving direct access to such live or rotating parts shall not permit the passage of a cylindrical rod 0.75 inch in diameter.

The openings in the machine enclosure shall be such that:

1. a probe such as that illustrated in Figure 2-1, when inserted through the openings, will not touch an uninsulated live metal part or a hazardous rotating part; and ,
2. a probe such as that illustrated in Figure 2-2, when inserted through the openings, will not touch enameled insulated wire.

NEMA Standard 9-17-1981.

E. DRIPPROOF GUARDED MACHINE

A dripproof guarded machine is a dripproof machine whose ventilating openings are guarded in accordance with paragraph D.

F. OPEN EXTERNALLY-VENTILATED MACHINE

An open externally-ventilated machine is one which is ventilated by means of a separate motor-driven blower mounted on the machine enclosure. Mechanical protection is defined in paragraphs A to E, inclusive. This machine is sometimes known as a blower-ventilated or a forced-ventilated machine.

G. OPEN PIPE-VENTILATED MACHINE

An open pipe-ventilated machine is an open machine except that openings for the admission of the ventilating air are arranged so that inlet ducts or pipes can be connected to them. Open pipe-ventilated machines are either self-ventilated (air circulated by means of an integral with the machine) or force-ventilated (air circulated by means external to and not a part of the machine). Enclosures are defined in paragraphs A to E, inclusive.

H. WEATHER-PROTECTED MACHINE

TYPE I

A weather-protected Type I machine is an open machine with its ventilating passages constructed to minimize the entrance of rain, snow, and air-borne particles to the electric parts and having its ventilated openings constructed to prevent the passage of a cylindrical rod 0.75 inch in diameter.

TYPE II

A weather-protected Type II machine shall have, in addition to the enclosure defined for a weather-protected Type I machine, its ventilating passages at both intake and discharge arranged so that high-velocity air and air-borne particles blown into the machine by storms or high winds can be discharged without entering the internal ventilating passages leading directly to the electric parts of the machine itself. The normal path of the ventilating air which enters the electric parts of the machine shall be so arranged by baffling or separate housings as to provide at least three abrupt changes in direction, none of which shall be less than 90 degrees. In addition, an area of low velocity not exceeding 600 feet per minute shall be provided in the intake air path to minimize the possibility of moisture or dirt being carried into the electric parts of the machine.

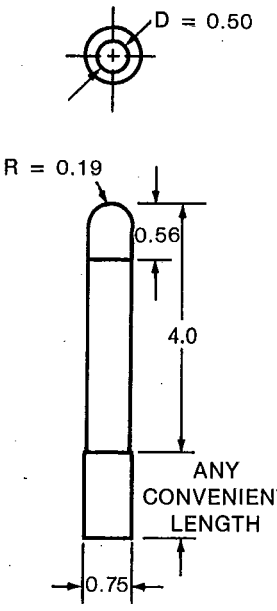

Figure 2-1
PROBE

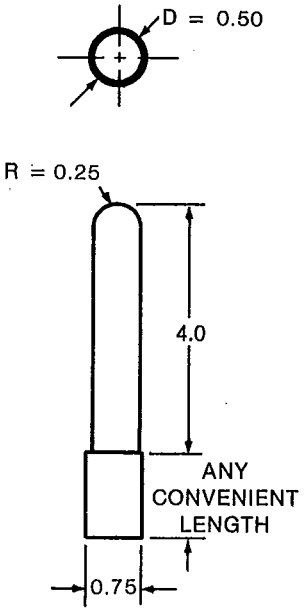

Figure 2-2
PROBE

Copyright National Electrical Manufacturers Association
Provided by IHS under license with NEMA
No reproduction or networking permitted without license from IHS
Not for Resale

2.4.2 Totally-Enclosed Machine

A totally-enclosed machine is one enclosed to prevent the free exchange of air between the inside and outside of the case but not sufficiently enclosed to be termed air-tight.

A. Totally-Enclosed Nonventilated Machine

A totally-enclosed nonventilated machine is a totally-enclosed machine which is not equipped for cooling by means external to the enclosing parts.

B. Totally-Enclosed Fan-Cooled Machine

A totally-enclosed fan-cooled machine is a totally-enclosed machine equipped for exterior cooling by means of a fan or fans integral with the machine but external to the enclosing parts.

C. Explosion-Proof Machine

An explosion-proof machine is a totally-enclosed machine whose enclosure is designed and constructed to withstand an explosion of a specified gas or vapor which can occur within it and to prevent the ignition of the specified gas or vapor surrounding the machine by sparks, flashes, or explosions of the specified gas or vapor which occur within the machine casing.

D. Dust-Ignition-Proof Machine

A dust-ignition-proof machine is a totally-enclosed machine whose enclosure is designed and constructed to exclude ignitable amounts of dust or amounts which might affect performance or rating, and which will not permit arcs, sparks, or heat otherwise generated or liberated inside the enclosure to cause ignition of exterior accumulations or atmospheric suspensions of a specific dust on or in the vicinity of the enclosure.

Successful operation of this type of machine requires avoidance of overheating from such causes as excessive overloads, stalling, or accumulation of excessive quantities of dust on the machine.

E. Waterproof Machine

A waterproof machine is a totally-enclosed machine constructed so that it will exclude water applied in the form of a stream from a hose. Leakage is permitted around the shaft if the water is prevented from entering the oil reservoir and provision is made for automatically draining the machine. The means for automatic draining can be a check valve or a tapped hole at the lowest part of the frame, which will serve for application of a drain pipe.

NOTE: A common form of test for a waterproof machine is to spray on the machine a stream of water from a hose with a 1-inch nozzle delivering at least 65 gallons per minute from a distance of about 10 feet, from various directions, for a period of not less than 5 minutes.

(This paragraph is designated Authorized Engineering Information 9-17-1981.)

F. Totally-Enclosed Pipe-Ventilated Machine

A totally-enclosed pipe-ventilated machine is a machine with openings arranged so that when inlet and outlet ducts or pipes are connected to them, there is no free exchange of the internal air and the air outside the case.

NOTE: Totally-enclosed pipe-ventilated machines may be self-ventilated (air circulated by means integral with the machine) or forced-ventilated (air circulated by means external to and not a part of the machine). See paragraph G of MG 1-1.25 for definition of an open pipe-ventilated machine.

(This paragraph is designated Authorized Engineering Information 9-17-1981.)

G. Totally-Enclosed Water-Cooled Machine

A totally-enclosed water-cooled machine is a totally enclosed machine which is cooled by circulating water, the water or water conductors coming in direct contact with the machine parts.

H. Totally-Enclosed Water-Air-Cooled Machine

A totally-enclosed water-air-cooled machine is a totally-enclosed machine which is cooled by circulating air which, in turn, is cooled by circulating water. It is provided with a water-cooled heater exchanger for cooling the internal air and a fan or fans, integral with the rotor shaft or separate, for circulating the internal air.

I. Totally-Enclosed Air-to-Air-Cooled Machine

A totally-enclosed air-to-air-cooled machine is a totally-enclosed machine which is cooled by circulating the internal air through a heat exchanger which, in turn, is cooled by circulating external air. It is provided with an air-to-air heat exchanger for cooling the internal air and a fan or fans, integral with the rotor shaft or separate, for cir-

Copyright National Electrical Manufacturers Association
Provided by IHS under license with NEMA
No reproduction or networking permitted without license from IHS
Not for Resale

culating the internal air and a separate fan for circulating the external air.

J. TOTALLY-ENCLOSED FAN-COOLED GUARDED MACHINE

A totally-enclosed fan-cooled guarded machine is a totally-enclosed fan-cooled machine in which all openings giving direct access to the fan are limited in size by the design of the structural parts or by screens, grilles, expanded metal, and so forth, to prevent accidental contact with the fan. Such openings shall not permit the passage of a cylindrical rod 0.75 inch in diameter, and a probe such as that shown in Figure 2-1, shall not contact the blades, spokes or other irregular surfaces of the fan.

K. TOTALLY-ENCLOSED AIR-OVER MACHINE

A totally-enclosed air-over machine is a totally-enclosed machine intended for exterior cooling by a ventilating means external to the machine.

NEMA Standard 9-17-1981.

2.4.3 Machine with Encapsulated or Sealed Windings

A. MACHINE WITH ENCAPSULATED WINDINGS

A machine with encapsulated windings is an alternating-current squirrel-cage machine having random windings filled with an insulating resin which also forms a protective coating. This type of machine is intended for exposure to more severe environmental conditions than usual varnish treatments can withstand. Other parts of the machine may require protection against such environmental conditions. (See enclosures described in 2.4.1 and 2.4.2.)

B. MACHINE WITH SEALED WINDINGS

A machine with sealed windings is an alternating-current squirrel-cage machine using form-wound coils and having an insulation system which, through the use of materials, processes, or a combination of materials and processes, results in a sealing of the windings and connections against contaminants. This type of machine is intended for exposure to more severe environmental conditions than the usual insulation system can withstand. (See enclosures described in 2.4.1 and 2.4.2.)

NEMA Standard 9-17-1981.

Other parts of the machine may require protection against such environmental conditions.

(This sentence is designated Authorized Engineering Information 9-17-1981.)

2.5 SPEED

2.5.1 Constant-Speed Motor

A constant-speed motor is one in which the speed of normal operation is constant or practically constant; for example, a synchronous motor, an induction motor with small slip, or a direct-current shunt-wound motor.

NEMA Standard 9-17-1981.

2.5.2 Varying-Speed Motor

A varying-speed motor is one in which the speed varies with the load, ordinarily decreasing when the load increases; for example, a series-wound or repulsion motor.

NEMA Standard 9-17-1981.

2.5.3 Adjustable-Speed Motor

An adjustable-speed motor is one in which the speed can be varied gradually over a considerable range, but when once adjusted remains practically unaffected by the load, such as a direct-current shunt-wound motor with field-resistance control designed for a considerable range of speed adjustment.

NEMA Standard 9-17-1981.

2.5.4 Base Speed for an Adjustable-Speed Motor

The base speed of an adjustable-speed motor is the lowest rated speed obtained at rated load and rated voltage at the temperature rise specified in the rating.

NEMA Standard 9-17-1981.

2.5.5 Adjustable Varying-Speed Motor

An adjustable varying-speed motor is one in which the speed can be adjusted gradually, but when once adjusted for a given load, will vary in considerable degree with change in load; for example, a direct-current compound-wound motor adjusted by field control or a wound-rotor induction motor with rheostatic speed control.

NEMA Standard 9-17-1981.

2.5.6 Multispeed Motor

A multispeed motor is one which can be operated at any one of two or more definite speeds, each being practically independent of the load; for example, a direct-current motor with two armature windings or an induction motor with windings capable of various pole groupings. With multispeed permanent-split capacitor and shaded pole motors, the speeds are dependent upon the load.

NEMA Standard 9-17-1981.

Copyright National Electrical Manufacturers Association
Provided by IHS under license with NEMA
No reproduction or networking permitted without license from IHS
Not for Resale

2.6 RATING, PERFORMANCE, AND TEST

2.6.1 Rating of a Machine

The rating of a machine shall consist of the output power together with any other characteristics, such as speed, voltage, and current assigned to it by the manufacturer. For machines which are designed for absorbing power, the rating shall be the input power.

A. CONTINUOUS RATING

The continuous rating defines the load which can be carried for an indefinite period of time.

B. SHORT-TIME RATING

The short-time rating defines the load which can be carried for a short and definitely specified time.

NEMA Standard 9-17-1981.

2.6.2 Efficiency

The efficiency of a motor or generator is the ratio of its useful power output to its total power input and is usually expressed in percentage.

NEMA Standard 9-17-1981.

2.6.3 Power Factor

The power factor of an alternating-current motor or generator is the ratio of the kilowatt input (or output) to the kVA input (or output) and is usually expressed as a percentage.

NEMA Standard 9-17-1981.

2.6.4 Service Factor—Alternating-Current Motors

The service factor of an alternating-current motor is a multiplier which, when applied to the rated horsepower, indicates the permissible horsepower loading that can be carried under the conditions specified for the service factor (see MG 1-12.47).

NEMA Standard 10-21-1987.

2.6.5 Speed Regulation of Direct-Current Motors

The speed regulation of a direct-current motor is the difference between the steady no-load speed and the steady rated-load speed, expressed in percent of rated-load speed.

NEMA Standard 9-17-1981.

2.6.6 Voltage Regulation of Direct-Current Generators

The voltage regulation of a direct-current generator is the final change in voltage with constant field rheostat setting when the specified load is reduced gradually to zero, expressed as a percent of rated-load voltage, the speed being kept constant.

NEMA Standard 9-17-1981.

In practice it is often desirable to specify the overall regulation of the generator and its driving machine, thus taking into account the speed regulation of the driving machine.

(This sentence is designated Authorized Engineering Information 9-17-1981.)

2.6.7 Secondary Voltage of Wound-Rotor Motors

The secondary voltage of wound-rotor motors is the open-circuit voltage at standstill, measured across the slip rings, with rated voltage applied on the primary winding.

NEMA Standard 9-17-1981.

2.6.8 Full-Load Torque

The full-load torque of a motor is the torque necessary to produce its rated horsepower at full-load speed. In pounds at a 1-foot radius, it is equal to the horsepower times 5252 divided by the full-load speed.

NEMA Standard 9-17-1981.

2.6.9 Locked-Rotor Torque (Static Torque)

The locked-rotor torque of a motor is the minimum torque which it will develop at rest for all angular positions of the rotor, with rated voltage applied at rated frequency.

NEMA Standard 9-17-1981.

2.6.10 Pull-Up Torque

The pull-up torque of an alternating-current motor is the minimum torque developed by the motor during the period of acceleration from rest to the speed at which breakdown torque occurs. For motors which do not have a definite breakdown torque, the pull-up torque is the minimum torque developed up to rated speed.

NEMA Standard 9-17-1981.

2.6.11 Breakdown Torque

The breakdown torque of a motor is the maximum torque which it will develop with rated voltage applied at rated frequency, without an abrupt drop in speed.

NEMA Standard 9-17-1981.

Copyright National Electrical Manufacturers Association
Provided by IHS under license with NEMA
No reproduction or networking permitted without license from IHS
Not for Resale

2.6.12 Pull-Out Torque

The pull-out torque of a synchronous motor is the maximum sustained torque which the motor will develop at synchronous speed with rated voltage applied at rated frequency and with normal excitation.

Authorized Engineering Information 9-17-1981.

2.6.13 Pull-In Torque

The pull-in torque of a synchronous motor is the maximum constant torque under which the motor will pull its connected inertia load into synchronism, at rated voltage and frequency, when its field excitation is applied.

NEMA Standard 9-17-1981.

NOTE: The speed to which a motor will bring its load depends on the power required to drive it and whether the motor can pull the load into step from this speed depends on the inertia of the revolving parts, so that the pull-in torque cannot be determined without having the Wk^2 as well as the torque of the load.

(This sentence is designated Authorized Engineering Information 9-17-1981.)

2.6.14 Locked-Rotor Current

The locked-rotor current of a motor is the steady-state current taken from the line with the rotor locked and with the rated voltage (and rated frequency in the case of alternating-current motors) applied to the motor.

NEMA Standard 9-17-1981.

2.6.15 Temperature Tests

Temperature tests are tests taken to determine the temperature rise of certain parts of the machine above the ambient temperature, when running under a specified load.

NEMA Standard 9-17-1981.

2.6.16 Ambient Temperature

Ambient temperature is the temperature of the surrounding cooling medium, such as gas or liquid, which comes into contact with the heated parts of the apparatus.

NEMA Standard 9-17-1981.

2.6.17 High-Potential Test

High-potential tests are tests which consist of the application of a voltage higher than the rated voltage for a specified time for the purpose of determining the adequacy against breakdown of insulating materials and spacings under normal conditions (see MG 1, Part 3).

NEMA Standard 9-17-1981.

2.6.18 Starting Capacitance for a Capacitor Motor

The starting capacitance for a capacitor motor is the total effective capacitance in series with the starting winding under locked-rotor conditions.

NEMA Standard 9-17-1981.

2.6.19 Radial Magnetic Pull and Axial Centering Force

A. RADIAL MAGNETIC PULL

The radial magnetic pull of a motor or generator is the magnetic force on the rotor resulting from its radial (air gap) displacement from magnetic center.

B. AXIAL CENTERING FORCE

The axial centering force of a motor or generator is the magnetic force on the rotor resulting from its axial displacement from magnetic center.

Unless otherwise specified, the value of radial magnetic pull and axial centering force is at no load, with rated voltage, rated field current, and rated frequency applied, as applicable.

NEMA Standard 9-17-1981.

2.7 COMPLETE MACHINES

2.7.1 Synchronous Generators—Complete

A. BELTED TYPE

A belted-type generator consists of a generator with a shaft extension suitable for the driving pulley or sheave, with either two or three bearings as required, and with rails or with a sliding base which has provision for adjusting belt tension.

B. ENGINE TYPE

An engine-type generator consists of a stator, rotor "without shaft," foundation caps or sole plates, and brush rigging support. No base, bearings, shaft, shaft keys, or foundation bolts are included in generators of this type.

C. COUPLED TYPE

A coupled-type generator consists of a generator with shaft extension for coupling and with one or two bearings.

NEMA Standard 9-17-1981.

2.7.2 Direct-Current Generator—Complete

A. BELTED TYPE

A belted-type generator consists of a generator with a shaft extension suitable for the driving pulley or sheave, with either two or three bearings

Copyright National Electrical Manufacturers Association
Provided by IHS under license with NEMA
No reproduction or networking permitted without license from IHS
Not for Resale

as required, and with rails or with a sliding base which has provision for adjusting belt tension.

B. ENGINE TYPE

An engine-type generator consists of a field frame, armature (without shaft), foundation caps or sole plates (when required), and a brush rigging support. No base, bearings, shaft, shaft keys, or foundation bolts are included in generators of this type.

C. COUPLED TYPE

A coupled-type generator consists of a generator with a shaft extension suitable for coupling, with either one or two bearings as required.

NEMA Standard 9-17-1981.

2.8 INSULATION SYSTEMS

2.8.1 Classification of Insulation Systems

An insulation system is an assembly of insulating materials in association with the conductors and the supporting structural parts of a motor or generator. Insulation systems are divided into classes according to the thermal endurance of the system for temperature rating purposes. Four classes of insulation systems are used in motors and generators, namely, Classes A, B, F, and H. These classes have been established in accordance with IEEE Standard 1-1969, *General Principles for Temperature Limits in the Rating of Electric Equipment.*[3]

Insulation systems shall be classified as follows:

Class A

A Class A insulation system is one which has the thermal endurance to operate at the limiting Class A temperature specified in the temperature rise standard for the machine under consideration.

Class B

A Class B insulation system is one which has the thermal endurance to operate at the limiting Class B temperature specified in the temperature rise standard for the machine under consideration.

Class F

A Class F insulation system is one which has the thermal endurance to operate at the limiting Class F temperature specified in the temperature rise standard for the machine under consideration.

Class H

A Class H insulation system is one which has the thermal endurance to operate at the limiting Class H temperature specified in the temperature rise standard for the machine under consideration.

Tests shall be made in accordance with the following applicable IEEE test procedures:

1. Standard 117-1974 (R 1982), *Test Provisions for Evaluation of Systems of Insulating Materials for Random-Wound AC Electric Machinery.*
2. Standard 275-1981, *Thermal Evaluation of Insulation Systems for AC Electric Machinery Employing Form-Wound Pre-Insulated Stator Coils, Machines Rated 6900V and Below.*
3. Standard 304-1977 (R 1982), *Test Procedures for Evaluation and Classification of Insulation Systems for DC Machines.*

NEMA Standard 10-21-1987.

For other constructions for which tests have not been standardized, similar procedures shall be permitted to be used if it is shown that they properly discriminate between service-proven systems known to be different.

When evaluated by an accepted test, a new or modified insulation system shall be compared to an insulation system on which there has been substantial service experience. If a comparison is made on a system of the same class, the new system shall have equal or longer thermal endurance under the same test conditions; if the comparison is made with a system of a lower temperature class, it shall have equal or longer thermal endurance at an appropriately higher temperature. When comparing systems of different classes, an appropriate higher temperature shall be considered to be 25 °C per class higher than the temperature for the base insulation system class.

NEMA Standard 9-17-1981.

2.9 TERMINALS AND ABBREVIATIONS

2.9.1 Location of Terminal Markings

Terminal markings shall be placed on or directly adjacent to terminals to which connections must be made from outside circuits or from auxiliary devices which must be disconnected for shipment. Wherever specified, color coding can be used instead of the usual letter and numeral marking.

NEMA Standard 9-17-1981.

Terminal Markings

A combination of capital letters or symbols and an arabic numeral shall be used to indicate the character or function of the windings which are brought to the terminal.

The following letters and symbols shall be used for motors and generators and their auxiliary devices when they are included within or mounted on the machine.

[3] Institute of Electrical and Electronics Engineers, 345 East 47th Street, New York, NY 10017.

Copyright National Electrical Manufacturers Association
Provided by IHS under license with NEMA
No reproduction or networking permitted without license from IHS
Not for Resale

Armature—A1, A2, A3, A4, and so forth.

Brake—B1, B2, B3, B4, and so forth.

Alternating-current rotor windings (collector rings)—M1, M2, M3, M4, and so forth.

Capacitor—J1, J2, J3, J4, and so forth.

Control signal lead attached to commutating winding—C.

Dynamic braking resistor—BR1, BR2, BR3, BR4, and so forth.

Field (series)—S1, S2, S3, S4, and so forth.

Field (shunt)—F1, F2, F3, F4, and so forth.

Line—L1, L2, L3, L4, and so forth.

Magnetizing winding (for initial and maintenance magnetization and demagnetization of permanent magnet fields)—E1, E2, E3, E4, and so forth.

NOTE: E1, E3, or other odd-numbered terminals should be attached to the positive terminal of the magnetizing power supply of magnetization and to the negative terminal for demagnetization.

(This note is designated Authorized Engineering Information 9-17-1981.)

Resistance (armature and miscellaneous)—R1, R2, R3, R4, and so forth.

Resistance (shunt field adjusting)—V1, V2, V3, V4, and so forth.

Shunt braking resistor—DR1, DR2, DR3, DR4, and so forth.

Space heaters—H1, H2, H3, H4, and so forth.

Stator (for alternating-current machines only)—T1, T2, T3, T4, and so forth.

Starting switch—K.

Thermal protector—P1, P2, P3, P4, and so forth.

Equalizing lead— = (equality sign).

Neutral connection—Terminal letter with numeral 0.

For significance of the arabic numeral, see MG 1-2.20 for alternating-current machines and MG 1-2.10 for direct-current machines.

NEMA Standard 9-17-1981.

2.9.2 Abbreviations

Abbreviations used for markings which are attached to the motor or generator (rating plates, connections, and so forth) shall consist of capital letters because the conventional marking machines provide only numbers and capital letters and shall be in accordance with Table 2-1.

Table 2-1
ABBREVIATIONS

Abbreviation	Marking Indicated
A	Ampere
AC	Alternating current
AMB	Ambient
AO	Air over
ARM	Armature
BB	Ball bearing
BRG	Bearing
C	Celsius (Centigrade), degrees
CAP	Capacitor
CCW	Counterclockwise
CL	Class or classification
CODE	Code letter
CONN	Connection
CONT	Continuous
CFM	Cubic feet per minute
COMM	Commutating (Interpole)
COMP	Compensating
CPD	Compound
C/S	Cycles per second
CW	Clockwise
DC	Direct current
DIAG	Diagram
EFF	Efficiency
ENCL	Enclosure
EXC	Exciter or Excitation
F	Farenheit, degrees
FF	Form factor
FHP	Fractional horsepower
FLA	Full load amperes
FLD	Field
FR	Frame
FREQ	Frequency
GEN	Generator
GPM	Gallons per minute
GPS	Gallons per second
H	Henry
HI	High
HP	Horsepower

(continued)

Copyright National Electrical Manufacturers Association
Provided by IHS under license with NEMA
No reproduction or networking permitted without license from IHS
Not for Resale

Table 2-1 (continued)

Abbreviation	Marking Indicated
HR	Hour
HZ	Hertz
IND	Inductance or Induction
INS	Insulation System Class
KVA	Kilovolt-ampere
KVAR	Reactive kilovolt-ampere
KW	Kilowatt
L	Line
LB-FT	Pound-feet
LO	Low
LRA	Locked rotor amperes
MAX	Maximum
MFD	Microfarad
MG	Motor-generator
MH	Millihenry
MHP	Millihorsepower
MIN	Minimum
MIN	Minute
MTR	Motor
NEMA or DES	NEMA design letter
NO or #	Number
OZ-FT	Ounce-feet
OZ-IN	Ounce-inch
PF	Power factor
PH	Phase, phase or number phase
RB	Roller bearing
RECT	Rectifier or rectified
RES	Resistance
RHEO	Rheostat
RMS	Root mean square
ROT	Rotation
RPM	Revolutions per minute
RTD	Resistance temperature detector
SB	Sleeve bearing
SEC	Second (time)
SEC	Secondary
SER	Serial or serial no.
SER	Series
SF	Service factor
SFA	Service factor amperes
SH	Shunt
SPL	Special
STAB	Stabilized or stabilizing
STD	Standard
TACH	Tachometer
TC	Thermocouple
TEMP	Temperature
TEMP RISE	Temperature rise
TERM	Terminal
TH	Thermometer
TIME	Time rating
TORQ	Torque
TYPE	Type
V	Volt(s) or Voltage
VA	Volt-ampere
VAR	Reactive volt-ampere
W	Watt
WDG	Winding
WT	Weight

2.10 ROTATION

2.10.1 Rotation of Alternating-Current Machines

A. Alternating Generators

The standard direction for alternating generators shall be clockwise when facing the end of the machine opposite the drive.

NEMA Standard 9-17-1981.

B. Engine-Generator Sets

The direction of rotation of a generator mounted as a part of an engine-generator set is usually counterclockwise when facing the end opposite the drive.

Authorized Engineering Information 9-17-1981.

C. Single-Phase, Synchronous and Universal Motors

The standard direction of all single-phase, synchronous and universal motors shall be counterclockwise when facing the end of the machine opposite the drive.

NEMA Standard 9-17-1981.

2.10.2 Rotation of Direct-Current Machines

A. Direct-Current Motors

The standard direction of shaft rotation for direct-current motors shall be counterclockwise facing the end opposite the drive.

NEMA Standard 9-17-1981.

Copyright National Electrical Manufacturers Association
Provided by IHS under license with NEMA
No reproduction or networking permitted without license from IHS
Not for Resale

B. Reversal of Rotation

The direction of shaft rotation of direct-current motors depends on the relative polarities of the field and armature. Therefore, if the polarities of both are reversed, the direction of rotation will be unchanged. Since the field excitation of direct-current motors is obtained from an external source, residual magnetism has no practical effect on polarity except for those with permanent magnet excitation. Reversal of the shaft rotation of a direct-current motor is obtained by a transposition of the two armature leads or by a transposition of the field leads. With such reversed shaft rotation (clockwise) and when the polarity of the power supply is such that the direction of the current in the armature is from terminal 2 to terminal 1, the current will be flowing in the field windings from terminal 1 to terminal 2, and vice versa.

Authorized Engineering Information 9-17-1981.

C. Direct-Current Generators

The standard direction of shaft rotation for direct-current generators shall be clockwise facing the end opposite the drive.

NEMA Standard 9-17-1981.

D. Engine-Generator Set

The direction of rotation of a generator mounted as a part of an engine-generator set is usually counterclockwise facing the end opposite the drive. Self-excited direct-current generators, with connections properly made for standard direction of shaft rotation (clockwise), will not function if driven clockwise as any small current delivered by the armature tends to demagnetize the fields and thus prevent the armature from delivering current. If the conditions call for reversed direction of shaft rotation, connections should be made with either the armature leads transposed or the field leads transposed. The polarity of a self-excited direct-current generator, with accompanying direction of current flow in the several windings, is determined by the polarity of the residual magnetism. An accidental or unusual manipulation may reverse this magnetic polarity. Though the generator itself will function as well with either polarity, an unforseen change may cause disturbance or damage to other generators or devices when the generator is connected to them.

Authorized Engineering Information 9-17-1981.

E. Reverse Function

A direct-current machine may be used either as a generator or as a motor if the field design is suitable for such operation. (The manufacturer should be consulted regarding this.) For the desired direction of rotation, connection changes may be necessary. The conventions for current flow in combination with the standardization of opposite directions of rotation for direct-current generators and direct-current motors are such that any direct-current machine can be called "generator" or "motor" without a change in terminal markings.

Authorized Engineering Information 9-17-1981.

2.10.3 Rotation of Motor-Generator Sets

When one motor and one generator are coupled together at their drive ends, the standard direction of rotation for both machines shall be as given for that type of machine and will apply to the motor-generator set without a change in connections.

The correct direction of rotation shall be clearly indicated on a motor-generator set.

NEMA Standard 9-17-1981.

When two or more machines are coupled together at other than their drive ends, the standard direction of rotation cannot apply to all machines in the set. Changes in connections will be necessary for those machines operating in the opposite direction of rotation.

(This paragraph is designated Authorized Engineering Information.)

2.11 MISCELLANEOUS

2.11.1 Code Letter

A code letter is a letter which appears on the nameplate of alternating-current motors to show their locked-rotor kVA per horsepower. The letter designations for locked-rotor kVA per horsepower are given in MG 1-10.36.

NEMA Standard 9-17-1981.

2.11.2 Thermally Protected

The words "thermally protected" appearing on the nameplate of a motor indicate that the motor is provided with a thermal protector.

NEMA Standard 9-17-1981.

2.11.3 Overtemperature Protection

For alternating-current integral-horsepower motors, see MG 1-12.53.

For direct-current integral-horsepower motors, see MG 1-12.75.

NEMA Standard 9-17-1981.

Copyright National Electrical Manufacturers Association
Provided by IHS under license with NEMA
No reproduction or networking permitted without license from IHS
Not for Resale

Section 3
MAINTENANCE

3.1 FUNDAMENTALS OF ELECTRICITY

3.1.1 Electric Current

Electric current is movement of free electrons from negative to positive with an electrical conductor caused by a potential difference between the ends of the conductor.

A. DIRECT CURRENT

A direct current is a current which flows in one direction only. A pure direct current has a constant magnitude (value) with respect to time. A varying direct current varies in magnitude with respect to time. When variations in direct current occur at regular intervals, the direct current is called a pulsating direct current. Types of direct current are shown in Figure 3-1.

B. ALTERNATING CURRENT

An alternating current is an electric current which moves first in one direction for a fixed period of time and then in the opposite direction for an equal period of time. Constantly changing in magnitude from a zero value, alternating current builds up to a maximum in a positive direction, then declines to zero where it increases to a maximum in the opposite or negative direction, and then finally returns to zero at which point one cycle has been completed. For this reason, alternating current is further defined as a current which is constantly changing in magnitude (either building up or falling off) and periodically (at set intervals of time) changing direction. The shape of such alternating flow is that of a wave.

The most common wave is the sine wave, named after the trigonometric function whose graphic pattern it follows. Due, however, to the presence of electrical noise (random voltages generated within an electric circuit) the sine wave is often distorted. Consequently, many different kinds of alternating wave shape can occur, and are referred to as complex waves. Types of alternating current are shown in Figure 3-2.

Authorized Engineering Information 9-17-1981.

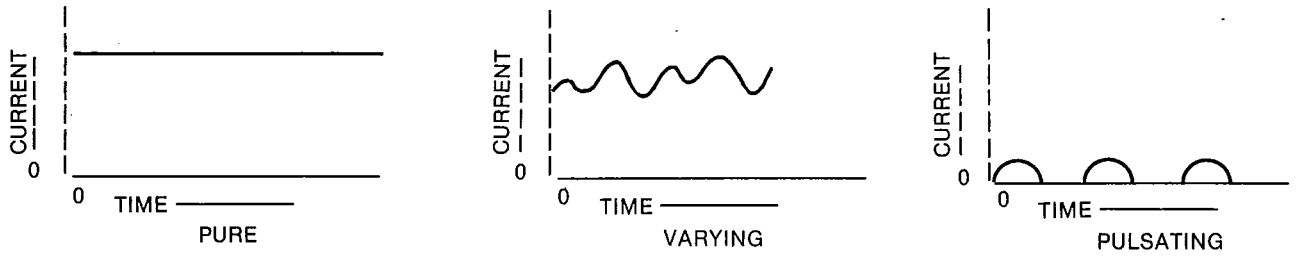

Figure 3-1
TYPES OF DIRECT CURRENT (DC)

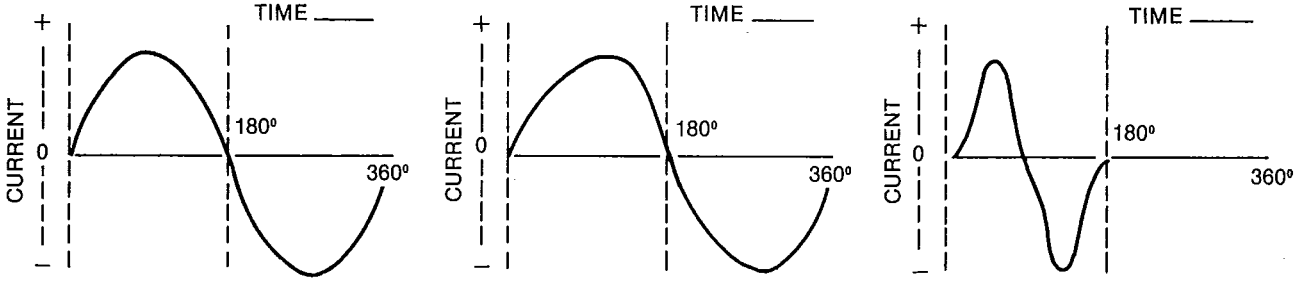

Figure 3-2
TYPES OF ALTERNATING CURRENT (AC)

Copyright National Electrical Manufacturers Association
Provided by IHS under license with NEMA
No reproduction or networking permitted without license from IHS
Not for Resale

3.1.2 Magnetism

Magnetism is a power of attraction or repulsion which can be introduced most pronouncedly in certain metals by means of an electric current. magnetic properties once it has been magnetized by artificial magnets. Magnets are also classified as either permanent magnets or electromagnets, depending upon their ability to retain their magnetic properties.

Permanent magnets are usually made of steel or steel alloys since steel has a tendency to retain its magnetic properties once it has been magnetized by an electric current. Electromagnets are usually made of soft iron or iron alloys since iron tends to lose most of its magnetic properties once the magnetizing influence of an electric current has been removed.

Authorized Engineering Information 9-17-1981.

3.1.3 Electromotive Force (EMF)

An electromotive (emf) is generated by the movement of an electrical conductor across a magnetic field (force). Though an emf is induced in a conductor when it passes through a magnetic field, electric current will flow in the conductor only when it is part of a closed loop. Similarly, movement of the magnetic field so its lines of force cut across a stationary conductor will generate an emf in the conductor.

Authorized Engineering Information 9-17-1981.

3.2 INSPECTION

3.2.1 Inspection Schedule and Records

A definite program of inspection schedules should be organized so that all apparatus is assured of attention at stated periods; these periods should be adjusted to meet the actual need which experience over a number of years has indicated is necessary. To assure adequate inspection, it is essential that an inspection record be kept for each piece of apparatus.

Consistent use of good inspection records is important. Generally, a layout should provide all the necessary information. Whatever form is used, it is essential that provisions be made to record those parts of the apparatus which are known to require correction or special attention.

An inspection record should be kept for each piece of apparatus to provide data regarding the suitability of a given machine and information on new machine purchases.

Authorized Engineering Information 9-17-1981.

3.2.2 Tools

One of the prime requisites of a good inspection crew is a complete set of inspection tools. Particularly important are the meters and other devices which give immediate indication of existing conditions for comparison with the information on the apparatus nameplate or in other material furnished by the manufacturer. The meters may be individual instruments such as a volunteer, ammeter, megohmmeter, thermometer, spring balance for brushholder fingers, speed counter, and so forth; or many of them may be grouped in a case known as a "circuit analyzer."

Authorized Engineering Information 9-17-1981.

3.2.3 Visual Inspection

Electrical tests should be supplemented by visual inspection of all areas which experience has shown to be vulnerable to damage or degradation. Obviously, this necessitates scheduling disassembly of the apparatus at the time the electrical tests are made.

The most significant items to which inspection should be directed, and possible findings are:

A. ARMATURE WINDINGS

1. Deterioriation or degradation of insulation resulting from thermal aging due to cumulative time-temperature effects. Examination of coils might reveal general puffiness, swelling into ventilation ducts, or a lack of firmness of the insulation, suggesting a loss of bond with consequent separation of the insulation layers from themselves or from the winding conductors or turns.

2. Girth cracking or separation of the ground wall of form wound coil is most likely to occur on long stator coils having asphaltic-type bonds. Particular attention should be paid to the areas immediately adjacent to the ends of the slots. Where considerable cracking is observed, it is recommended that the wedges at the ends of the slots be removed because dangerous cracks may also have occurred just within the slots.

3. Contamination of coil and connection surfaces by substances which adversely affect insulation strength, the most common being carbon dust, oil, or moisture contamination.

4. Abrasion or contamination of coil and connection surfaces from other sources, such as chemicals, abrasive, or conducting substances. Such effects are aggravated in the case of motors used in adverse atmospheric industrial applications, such as chemical plants, rubber mills, and paper manufacturing facilities.

Copyright National Electrical Manufacturers Association
Provided by IHS under license with NEMA
No reproduction or networking permitted without license from IHS
Not for Resale

5. Cracking or abrasion of insulation resulting from prolonged or abnormal mechanical stresses. In stator windings, looseness of the bracing structure is a certain guide to such phenomena and can itself cause further mechanical damage if allowed to go unchecked.

6. Eroding effects of foreign substances embedded or lodged against coil insulation surfaces. Particularly damaging are magnetic particles which vibrate with the effects of the magnetic field in the machine.

7. Insulation deterioration due to corona discharges in the body of the machine or end windings. These are evident by white, gray, or red deposits and are particularly noticeable in areas where the insulation is subject to high electrical stresses. Some experience is required to distinguish these effects from powdering which can occur as a result of relative vibratory movement between hard surfaces and which can be caused by loose end-winding structures.

8. Loose slot wedges or slot fillers which, if allowed to go uncorrected, may themselves cause mechanical damage or reduce the effectiveness of stator coil retention against short circuit and other abnormal mechanical forces.

9. The effects of overspeeding may be observed on direct-current armatures by distortion of the windings or commutator risers, looseness, or cracking of the banding of movement of slot wedges, if any.

10. Commutators should be checked for uneven discoloration which can result from short circuiting of bars or for pinholes and burrs resulting from flashover.

11. The risers (connections between commutator bars and coils in slots) may collect carbon deposits to cause electrical leakage and subsequent failure.

B. Field Windings

In addition to insulation degradation from causes similar to those listed in paragraph A on armature windings, close attention should be paid to the following in field windings:

1. Distortion of coils due to the effects of abnormal mechanical, electrical, or thermal forces. Such distortion might cause failure between turns or to ground.

2. Shrinkage or looseness of field-coil washers. This permits coil movement during periods of acceleration and deceleration with the probability of abrading turn insulation and breaking or loosening connections between coils.

3. Breakage or distortion of damper bars (caused by overspeed or abnormal thermal gradients between bars and the connecting end ring). Such breaks are often difficult to observe in machines which have operated in contaminated conditions and usually occur near the end ring or at the end of the pole piece. Low resistance measurements between bar and end ring by means of a "ducter" or similar instrument provides a means of detection.

4. Loose damper bars with related burning of the tips of the pole-piece laminations. Among other causes, this could occur as a result of improper swaging or other means of retention of the bar during manufacture.

5. In cylindrical-pole rotors (round-rotor) evidence of heating of wedges at their contact with the retaining body and "half-mooning" or cracks on the retaining rings can be caused by high circulating currents due to unbalanced operation or sustained single-phase faults close to the generator, such as in the leads or generator bus.

6. The condition and tightness of end-winding blocking, signs of movement of the retaining-ring insulating liner, and any other looseness should be noted.

7. Powdered insulation in air ducts is evidence of coil movement. Red oxide at metallic joints is evidence of movement of metal parts.

8. The tightness of field lead connections and condition of collector lead insulation should be checked.

C. Brush Rigging

1. The brush rigging should be checked for evidence of flashover.

2. Before disassembly, the brush boxes should be checked to ensure that the clearance from the collector or commutator surface is in line with the manufacturer's recommendations. They should be checked to see whether the brushes are free riding and that excessive carbon build-up is not present.

3. The brushes themselves should be checked to see whether any excessive edge chipping, grooving, or double facing is evident.

4. Brush connections should also be checked.

Authorized Engineering Information 9-17-1981.

3.2.4 Insulation Resistance Test

An insulation resistance test should be made to evaluate the effect outside influences have on the equipment. Such a test gives an indication of the condition of the insulation, particularly with regard to moisture and dirt. On most of the larger types

Copyright National Electrical Manufacturers Association
Provided by IHS under license with NEMA
No reproduction or networking permitted without license from IHS
Not for Resale

of machines, the manufacturer runs a test and obtains an insulation resistance curve against which periodic checks can be made. It must be remembered that the atmospheric conditions, including the ambient temperature in which the machine operates, will affect the test results, and corrections should be made. It should also be noted that one set of readings by itself means very little. Readings should be taken periodically and checked against previous readings. These periodic checks indicate trends, which are the principal objectives.

Standards of the Institute of Electrical and Electronics Engineers recommend that the insulation resistance be measured on clean, dry, alternating-current stator and rotor windings. The recommended minimum insulation resistance (Rm) for alternating-current and direct-current machine armature windings and for field windings of alternating-current and direct-current machines can be determined by the formula:

$$RM = kv + 1$$

where:

Rm = recommended minimum insulation resistance in megohms at 40C of the entire machine winding.

kv = rated machine potential in kilovolts.

RM at 40C is in effect one megohm per 1,000 volts plus one megohm.

Insulation resistance measurements should be made at regular intervals.

The time interval scheduled should depend on the operator's own experience and should always consider the importance and service reliability of the equipment concerned.

Insulation resistance can be measured with a self-contained instrument, such as the direct indicating ohmmeter of the generator, battery or electronic type, with a resistance bridge, or with a milliammeter, a voltmeter, and a direct-current supply. As an expedient where no insulation testing device is available but where 500-volt direct-current is available, a high resistance voltmeter will give fairly satisfactory results.

Insulation measurement by the 500-volt testing method may also be made through the use of an instrument which provides its own 500-volt supply.

Insulation resistance will vary inversely with the temperature. As an approximation, the insulation resistance will be halved by a 5 to 15 C rise in the temperature of the apparatus. Clean apparatus will give the best and longest service. Electrical apparatus should not only be protected against dirt and moisture but, also, against oil (which always collects dirt), acids, alkalis, chemical compounds, gases, and so forth, which may cause deterioration of insulation or corrosion of metal parts.

Authorized Engineering Information 9-17-1981.

3.2.5 Operating Temperatures

Due to the inherent characteristics of insulating materials, abnormally high temperatures shorten the operating life of electrical apparatus. The total (or actual) temperature, not the temperature rise, should be the measure of safe operation. A relatively low temperature rise with a very high ambient may result in rapid deterioration of insulation. When the windings of a machine are operating at a temperature higher than that designated for the class of insulation used, the operating conditions should be investigated. The cause of gradually rising temperatures should be determined and abnormal conditions corrected. Sharply rising temperatures generally warrant a shutdown and thorough examination of the apparatus.

Insulating systems are divided into classes according to the thermal endurance. Each of the classes of the various insulation systems are rated from experience or accepted tests which can be shown to have suitable thermal endurance when operating at the limiting class temperature specified in the temperature rise standard for the motor or generator under consideration (see 2.8.1).

The total (or actual) temperature, not just the temperature rise, determines the rate of thermal degradation of the insulation. The total temperature is the sum of the ambient temperature and the temperature rise. Thus, even though the temperature rise is within accepted limits, a high ambient may result in rapid deterioration of the insulation. Furthermore, on large machines, a temperature rise higher than the limits permitted by machine standards may in itself be damaging even though the ambient temperature is below normal so the total temperature is not excessive. Thus, when the windings of a machine are operating at a temperature rise or at a total temperature higher than that permitted by machine standards for the class of insulation used, the operating conditions should be investigated.

Aging of insulation occurs at an accelerated rate at abnormally high temperatures. A general rule for gauging these degrees of rise is that for each 10 °C rise in temperature above the maximum limit for the insulation, the life of the insulation is halved.

Many industries use Fahrenheit thermometers. Fahrenheit-Centigrade temperature conversion formulae are given below:

Copyright National Electrical Manufacturers Association
Provided by IHS under license with NEMA
No reproduction or networking permitted without license from IHS

Not for Resale

Degrees Fahrenheit = 9/5 (Degrees Centigrade + 32)

Degrees Centigrade = 5/9 (Degrees Fahrenheit − 32)

Authorized Engineering Information 9-17-1981.

3.2.6 Effects of Overloading and Single-Phase Operation

Often, a motor of adequate capacity which is properly applied originally is later found to be overloaded or otherwise unsuited for its job due, for example, to:

1. More severe duty imposed on the machine tool, such as a different job in a punch press;
2. Machining of heavier material or material of different machining characteristics; and
3. Changed machine operations.

Measuring instruments, such as a voltmeter, ammeter, or wattmeter, connected in the motor circuit, will assist in detecting the reasons for motor overheating, failure to start the load, or other abnormal symptoms. It is frequently desirable to connect recording instruments in the motor circuit for other purposes to analyze the output of the machine as a check on the operator or to gauge processing operations.

Controllers of many of the older induction motor installations were not equipped with three overload relays, and single-phase operation of polyphase induction motors on such circuits has frequently been responsible for motor burnouts. Usually, this results from the blowing of one of the fuses, providing short-circuit protection for the motor branch circuit while the motor is up to speed and under partial load. Under such conditions, the portion of winding remaining in the circuit may continue to operate as a single-phase winding, producing sufficient overheating to burn out the windings unless the phase current is large enough to blow the second fuse and stop the motor.

The effect of increasing the load on a motor beyond its rated capacity increases the operating temperature. Continued operation at excessive temperature shortens the life of the insulation. Momentary overloads usually do no damage.

Authorized Engineering Information 9-17-1981.

3.2.7 Voltage Checks

Unbalanced voltage or single-phase operation of polyphase machines may cause excessive heating and ultimate failure. A slight unbalance of voltage applied to a polyphase machine may cause large unbalanced currents and resultant overheating. In such cases, the power supply should be checked and rectified if even the slightest unbalance is found.

Single-phase power applied to a three-phase motor may also cause excessive heating from failure to start or from unbalanced currents.

Unbalanced currents may also be caused by attempts to operate machines having one or more coils disconnected or cut out of one or more phases. If the unbalance is applicable, the machine should be rewound.

A variation in voltage not exceeding plus or minus 10 percent is generally permissible, but better performance will result if a voltage closer to the rated voltage is maintained.

In an induction motor of normal characteristics at full rated horsepower load, a 10 percent increase in voltage above that given on the nameplate will usually result in a slight change in efficiency and a decided lowering in power factor. A 10 percent decrease in voltage below that given on the nameplate will usually give a slight decrease in efficiency and an increase in power factor.

Authorized Engineering Information 9-17-1981.

3.3 DIRECT-CURRENT MOTORS AND GENERATORS AND REPULSION-INDUCTION MOTORS

In general, the recommendations given for direct-current motors also apply to repulsion-induction motors used on alternating-current circuits.

3.3.1 Cleanliness

One of the principal causes of malfunction and eventual failure in direct-current and repulsion-induction rotating equipment is dirt, either from an accumulation of day-to-day dust or from contamination by particles from nearby machinery, such as metallic dust, lint, oil vapors, chemicals, and so forth. This is particularly true because this type of electrical apparatus with its commutators, brushes and brush rigging can become fouled with dirt, resulting in unsatisfactory performance, arcing, and subsequent burning.

The electrical conductors in all electrical equipment are separated from the mechanical components by materials which are grouped under the general term "insulation". Insulation is used on coils to isolate individual turns and to separate the coils from the core. Insulation is used in commutators to separate the bars from each other and, on the brush rigging, to isolate it from the frame or end bracket. Here again, the importance of cleanliness must be stressed since electrical insulation materials are nonconducting only when clean and dry. Accumulations of dust and dirt not only contribute to insulation breakdown, but they

Copyright National Electrical Manufacturers Association
Provided by IHS under license with NEMA
No reproduction or networking permitted without license from IHS
Not for Resale

operate to increase temperature through the restriction of ventilation and by blocking the dissipation of heat from the winding and frame surfaces.

Authorized Engineering Information 9-17-1981.

3.3.2 Armature

The armature is the heart of the direct-current motor. Through it flows the line current and, if the machine is overloaded, the armature is the first component to show evidence of damage. If given reasonable attention by scheduled periodic inspection and cleaning, it should give little or no trouble if the unit is operated within its normal rating. Repairs should be entrusted only to a competent person or repair facility.

Authorized Engineering Information 9-17-1981.

3.3.3 Handling of Armatures

When the armature is removed from the frame for either maintenance or repair, the following precautions should be observed in order to insure that the armature is not damaged:

1. Precautions should be taken at all times to protect the commutator and shaft bearing surfaces.
2. The armature should not be rolled about the floor since injury to the coils or banding may result.
3. The armature should be supported or lifted only by its shaft, if possible. Otherwise, a lifting belt should be used under the core.
4. The weight of the armature should never be allowed to rest on the commutator or coil heads.

Authorized Engineering Information 9-17-1981.

3.3.4 Windings

Periodic inspection, varnish treatment, and curing will prolong the life of the winding. Loose slot wedges and banding should be replaced before varnish treatment and curing. Cleaning, varnish treatment, and curing should include the operations in 3.6.

Treatments of this type are definitely recommended for equipment which is subjected to excessive temperatures or contaminants and are desirable even though the equipment is not subject to adverse conditions. Windings dry out and loosen in operation, and loose windings fail rapidly when subjected to centrifugal stresses and vibrations. Varnish treatments fill the pores and crevices. They help to preserve flexibility in the insulation and hold the coils solidly in the slots, thereby keeping failures to a minimum.

Authorized Engineering Information 9-17-1981.

3.3.5 Banding

If the armature is to be rebanded with steel wire, the banding originally furnished by the manufacturer should be duplicated very closely with respect to material, diameter of the banding wire, width, and position of each band. Any change in banding width, position or material could cause heavy current in the bands sufficient to overheat and melt the solder.

Recent developments and tests in the use of resin-filled glass for the banding of armatures have eliminated many of the risks inherent in the use of metal bands. When properly applied, the strength factor of resin-filled glass is equal to that of steel bands; therefore, replacement of the original banding by resin-filled glass bands can be accomplished in the space provided for steel bands if the magnetic field is not disturbed. Since resin-filled glass is a good insulator, additional heavy insulation under the band is not required and eddy currents are nonexistent. It is imperative that resin-filled glass banding be applied under tension by an expert, using the proper equipment.

Authorized Engineering Information 9-17-1981.

3.3.6 Commutation

Commutation is the process of collecting current from a commutator which, at the same time, short circuits those coils in which the current is reversed. Since there is a voltage (even though small) generated in each of these short-circuited coils, a circulating current is present in the face of the carbon brush in addition to the load current. The voltage causing this circulating current is proportional to the load current and the speed and, as the speeds and ratings of modern machines are increased, this becomes a more serious factor. Since this voltage, under some conditions, becomes so high as to cause excessive sparking, it is the designer's problem to control this reactive voltage by designing the machine to minimize the effect of flux generated in the armature circuit and by the judicious use of commutating poles, sometimes called interpoles. Successful commutation also requires a good continuous contact between the brush and the commutator's surface.

Successful commutation is not a function of the brush alone or of the commutator or electrical circuit alone, but results from optimum electrical and mechanical brush-to-commutator conditions.

Commutation is such a complex problem that it is necessary to keep the many adverse variables at a minimum. Commutation may be adversely affected by dust, dirt, gases, oil vapor, and so forth. Varying

Copyright National Electrical Manufacturers Association
Provided by IHS under license with NEMA
No reproduction or networking permitted without license from IHS
Not for Resale

atmospheric conditions such as high temperature or low humidity also affect commutation. When a commutation problem exists due to one or more of these ambient conditions, it is sometimes possible to solve it by altering the unit to offset the condition. If the commutation of a unit is not satisfactory and a change in brush grade is indicated, the manufacturer should be consulted. However, in general, this is not a true solution.

The mechanical condition of the unit can also greatly affect commutation. Commutators should be periodically checked for high bars which will cause flashing and generally poor commutation. Both commutators and slip rings should be smooth, round, and concentric with the axis of rotation. If there is any appreciable vibration, the cause should be determined and corrected.

Assuming a commutator has been designed and manufactured correctly, the causes of commutator problems are usually those brought on by service conditions or improper commutator installation.

A. Service Conditions

Some of the most common service problems and their causes are as follows:

1. High commutator bars generally produce sparking noisy operation, and chipped or broken brushes. The causes are usually a loose commutator, improper undercutting, open or high resistance connections, or electrical shorts.
2. Streaking or threading of the commutator surface causes rough surfaces with associated sparking. Primary faults can be:
   a. Low average current density in brushes due to light machine loading.
   b. Contaminated atmosphere.
   c. Oil on commutator or oil mist in air.
   d. Low humidity.
   e. Lack of film-forming properties in brush.
   f. Brushes too abrasive.
3. Bar etching or burning produces a rough commutator with associated sparking and eventual flashover. Such burning often results from:
   a. High mica.
   b. Operation of machine with brushes off neutral.
   c. Dirty commutator.
   d. Incorrect spring tension.
   e. Machine operating overloaded or under rapid load change such as plugging.
4. Bar marking at pole pitch spacing produces a rough commutator with associated sparking and eventual flashover. This burning is generally caused by electrically shorted commutator bars or coils, open armature or field circuits, severe load conditions, misalignment of the coupling, and vibration. The burning in the early stages is generally evident at one-half the number of poles.
5. Bar marking at slot pitch spacing produces rough bars at regular intervals around a commutator. Since several coils are imbedded in each armature slot, all of the coils may not be equally compensated. The energy unbalance is reflected into the last coil in the slot to undergo commutation and will result in a spark at the brush. Such a spark will cause burned spots on the bars equally spaced according to the bars per slot ratio.
6. Selective commutation can occur on machines with more than one brush per brush stud if the resistance path of one brush is lower than the other brushes on the same stud. Due to higher spring pressure, improper staggering of brushes, or a breakdown of the commutator film in one path, the brush with the low contact drop will have a tendency to carry more than its share of the current.

B. Commutator Installation

The more common causes of problems with commutator installations are:

1. Improper seasoning and tightening of commutator segment assembly to the core.
2. Improper installation of coil leads to commutator, such as:
   a. Improper slot size.
   b. Excessive staking impact.
   c. Improper heat application.
   d. High resistance connections.
3. Improper undercutting operation such as failure to remove mica slivers.

Authorized Engineering Information 9-17-1981.

3.3.7 Commutator Vee Ring Insulation

The exposed portion of the front vee ring insulation is normally the target for moisture, oil and dirt, which may cause flashovers and breakdowns to the ground. It is, therefore, essential that the exposed surface of the mica be kept clean and protected by means of other insulation.

There are various ways to apply extra insulation at this point, depending upon the individual ideas of the machine designer. Generally, however, this consists of a cord or tape of cotton or glass, wound in tight layers over the surface of the exposed section of the mica cone or vee ring. The exposed surface is then treated with several coats of varnish suitable for the operating temperature of the machine.

Copyright National Electrical Manufacturers Association
Provided by IHS under license with NEMA
No reproduction or networking permitted without license from IHS
Not for Resale

These multiple coats of varnish are applied to obtain a smooth, easily cleanable surface. The purpose is to obtain extra insulation which will protect the vee ring insulation and, so far as possible, seal the joint between the commutator bars and the vee ring. An example is shown in Figure 3-3.

Authorized Engineering Information 9-17-1981.

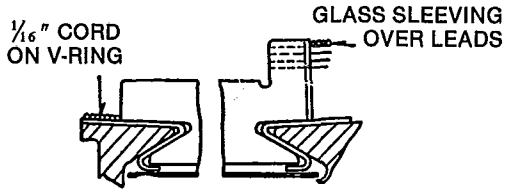

Figure 3-3

SMOOTH HARD FINISH INSULATING COMMUTATOR VEE RINGS

3.3.8 Field Windings

If the field winding of any type of direct-current motor is open circuited, the motor will fail to start or it will operate at excessive speeds at light loads, and serious sparking will occur at the commutator. It should not be concluded that a field is defective until rheostats, switches, and other devices in the motor circuit have been carefully inspected.

To check for grounded fields, a conventional high-potential transformer may be used. If the field circuit is free of grounds and shorted shunt field is suspected, comparative resistance measurements should be made of the individual coils and compared with the resistance of a similar coil which is known to be in good condition. Such a comparative check should preferably be made when the field windings are hot or near their normal operating temperature. A shunt field coil is made of a large number of turns of a relatively small size conductor, and a coil which shows the correct copper resistance when cold may show a lower value when hot. This is due to defective insulation between turns of adjacent conductors, and short circuits may not occur until expansion has taken place because of the increased temperature. If the correct resistance value of good coils is not known, comparative checks made with either a Wheatstone Bridge or by the voltammeter method will usually provide a reliable indication of shunt field resistance. If neither a Bridge nor an ammeter is available, a check of the condition of the coils may be obtained by connecting all shunt coils in series to a source of constant potential and measuring the voltage drop across individual coils.

For shorts in series and commutating field coils, where the resistance is necessarily low, the use of more sensitive instruments may be necessary to detect defects.

A common cause of field coil failure is overheating which may result from:

1. Operation of the machine at low speeds, preventing proper ventilation.
2. Excitation voltage too high.
3. Overloading machine.
4. High ambient temperature.

Faulty performance, indicated by poor commutation, improper speed and overheating, is frequently traceable to defective field coils or to improperly connected field windings.

Authorized Engineering Information 9-17-1981.

3.3.9 Replacing Field Coils

In removing a shunt or series field coil, the coil should be disconnected from the adjacent coils, and the bolts which secure the pole pieces to the frame should be removed. This will make it possible to remove the pole piece and coil, after which the pole piece, with a new or reinsulated coil, can be installed. Particular care should be taken in replacing the pole with its coil to be sure that the same steel or nonmagnetic shims between the frame and the back of the pole are in the same position to insure the same air gap which was present in the machine when it was new.

When reconnecting the coil, the proper polarity must be maintained. A simple way to test the polarity is by the use of a compass, a magnetized needle or a piece of magnetized steel wire suspended from the middle by a string. The polarity should be alternatively north and south around the frame. When the compass needle is brought within the magnetic field of any pole, one end of the needle will point toward this pole and this end should be repelled by the next pole, and so on around the frame. If this reversal of the needle does not occur, there is a faulty connection of one or more of the field coils.

Since there is a possibility of reversing the poles of a compass with a strong field, similar results can be obtained by putting the compass on a work bench, placing a steel scale against the pole of the machine, and then setting the scale against the compass. The readings will, of course, be reversed when compared to the direct reading with a compass.

Authorized Engineering Information 9-17-1981.

Copyright National Electrical Manufacturers Association
Provided by IHS under license with NEMA
No reproduction or networking permitted without license from IHS

Not for Resale

3.4 INDUCTION MOTORS

3.4.1 Types and Design

There are two types of alternating-current induction motor construction: squirrel-cage and wound rotor. Stator design is the same for both; they differ mainly in rotor design. There are no external rotating or secondary connections on a squirrel-cage motor; most wound rotors have a three-phase winding connected through collector rings to an adjustable secondary resistance.

Today's induction motor, especially the squirrel-cage type, is a highly efficient machine whose periods of trouble-free service can be considerably prolonged by systematic care. Correct application and installation will minimize maintenance requirements.

Essentially, maintenance of squirrel-cage induction motors centers about the stator windings and bearings. Rotors require little or no special care in normal service, except to make certain that bolts or other fasteners remain tightly secured. For wound-rotor types, rotor construction with the associated brush rigging requires additional maintenance.

Stator windings differ in induction motors, depending on the size of the stator frame. Smaller motors, generally, are known as mush wound and are sometimes called random or wire wound. Mush-wound coils are made by looping wire in an elliptical form without exact dimensions. Coils are inserted, a few wires at a time, in semiclosed stator slots.

Larger motors use form-wound coils, constructed by winding magnet wire in a loop which is then formed to an exact shape to meet specific dimensions of width, height, and pitch. Coils are fitted in open slots in the stator iron.

Insulations for stator and wound-rotor coils have, for many years, been a combination of organic varnishes and other organic materials. More recently, modern plastics technology has introduced other materials, such as the silicones and epoxies, which promise greatly increased insulation reliablility.

Authorized Engineering Information 9-17-1981.

3.4.2 Service Life

The life of a motor is limited largely by that of its insulation. Proper care can greatly extend its service reliability. Maintenance of winding insulation is mostly a matter of keeping the machine clean and dry, providing it with an adequate supply of cool, dry, ventilating air, and operating the machine within its rating.

Authorized Engineering Information 9-17-1981.

3.4.3 Care of Windings

A regular schedule of inspection can prevent costly shutdowns and repairs by revealing small defects which can be corrected before they develop into serious faults. The operating temperature of the machine should be checked at regular intervals. Open-type machines must be inspected more frequently than closed types, with the machines shut down if possible.

The interior of larger machines is often inaccessible because of the end covers, air baffles, and fans. These obstructions should be removed at regular intervals to permit a closer inspection. Under favorable conditions, a machine with a closed ventilating system may require complete inspection and cleaning not more than once a year. On the other hand, a machine operating under less favorable conditions may require a complete inspection and cleaning more often.

The best indication of the condition of the insulation is a record of the insulation resistance taken at regular intervals when the machine is hot. A sudden decrease in the insulation resistance may indicate an approaching breakdown, which may be avoided if the cause is located and corrected in time.

Authorized Engineering Information 9-17-1981.

3.4.4 Frequency of Starting Motors

Excessive starting of squirrel-cage induction motors sometimes cracks or breaks the rotor bars. The frequency of starting should be as follows:

1. Two starts in succession, coasting to rest between starts, with the motor initially at ambient temperature or of making one start with the motor initially at a temperature not exceeding its rated load operating temperature.
2. No additional starts until all conditions affecting operation have been thoroughly investigated and the apparatus examined for evidence of excessive heating. The number of starts should be kept to a minimum since the life of the motor is affected by the number of starts.

Authorized Engineering Information 9-17-1981.

3.4.5 Air Gap

A small air gap is characteristic of induction motors and has an important bearing on the machine's power factor. Anything which may affect

Copyright National Electrical Manufacturers Association
Provided by IHS under license with NEMA
No reproduction or networking permitted without license from IHS
Not for Resale

the air gap, such as grinding the rotor laminations or filing the stator teeth, may result in increased magnetizing current and lower power factor.

The air gap should be periodically checked with a feeler gauge to insure against a worn bearing which might permit the rotor to rub against the stator core. Even slight rubbing of the rotor against the stator will generate enough heat to destroy the coil insulation.

Measurements should be made on the drive end of the motor. Openings are provided in the end shields and inner air baffles of some machines for the insertion of feeler gauges for this purpose. This check is needed particularly for sleeve bearing motors. A change in air gap seldom occurs in antifriction bearing motors unless the bearing fails.

For small sleeve bearing motors without feeler gauge openings, a check of bearing wear using a dial indicator on the shaft extension should be considered.

A record of air gap checks should be kept especially on larger machines. Four measurements should be taken approximately 90 degrees apart. One point of measurement should be made in the direction of load. A comparison of periodic measurements will permit early detection of bearing wear.

Authorized Engineering Information 9-17-1981.

3.4.6 Maintenance of Rotor Windings

Rotor windings of wound-rotor motors have many features in common with stator windings, and the same comments apply to their care and maintenance. However, the rotor requires additional consideration because it is a rotating element.

Most wound rotors have a three-phase winding and are susceptible to trouble from single-phase operation and open circuits. The first symptoms of these faults are lack of torque, slowing down in speed, growling noise, or perhaps failure to start the load.

The first place to look for an open secondary circuit is in the resistance or the control circuit external to the rotor. Short-circuiting the rotor circuit at the slip rings and then operating the motor will usually determine that the trouble is in the control circuit or in the rotor itself.

Some rotors are wave wound, with windings made up of copper strap coils with clips connecting the top and bottom halves of the coil. These end connections should be inspected for possible signs of heating which could be an indication of a partial open circuit. Faulty end connections are a common source of open circuits in rotor windings. The open circuit may be at one of the stud connections of the collector rings.

A ground in a rotor circuit will not affect motor performance except that, in combination with another ground, it might cause the equivalent of a short circuit. This would have the effect of unbalancing the rotor electrically. Reduced torque is a symptom; others might be excessive vibration of the motor, sparking, or uneven wear of the collector rings. A test for this condition can be made with a 500-volt megohmeter.

Another fairly successful method of checking for short circuits in the rotor windings is to raise the brushes off the collector rings and energize the stator. A rotor winding which is free from short circuits should have little or no tendency to rotate, even when disconnected from the load. If it evidences considerable torque or a tendency to come up to speed, the rotor should be removed and the winding opened and examined for the fault. In making this test, it should be noted that some rotors having a wide tooth design may show a tendency to rotate even though the windings are in good condition.

With the rotor in place, the stator energized, and the brushes raised, the voltages across the collector rings should be checked to see if they are balanced. These voltages bear no particular relation to the line voltage and may be considerably higher. For example, they may be as high as 500 volts for a 200-volt stator. To ensure that any inequality in voltage measurements is not due to the relative positions of the rotor and stator phases, the rotor should be moved to several positions in taking these voltage measurements.

Authorized Engineering Information 9-17-1981.

3.4.7 Maintenance of Brushes and Rings

Brushes and collector rings on wound rotors need special care. Although a certain amount of wear is inevitable, conditions which lead to "grooving" of rings (concentration of wear in narrow rings or ruts) should be prevented, and abrasive dust should be wiped off rings at regular intervals.

Rough or uneven ring surfaces should be remedied as soon as possible, before sparking, pitting, and accelerated brush wear result. Allowing the rotor to oscillate axially will distribute wear more evenly. Unevenly worn brushes should be replaced to assure best operation.

Authorized Engineering Information 9-17-1981.

Copyright National Electrical Manufacturers Association
Provided by IHS under license with NEMA
No reproduction or networking permitted without license from IHS

Not for Resale

3.4.8 Centrifugal Switches

Basically, all single-phase motors are designed with a special arrangement of winding for starting. To accomplish this, some method is used to automatically change the electrical connections of a motor. This may be:

1. Starting and running windings, with centrifugally operated switches to disconnect the starting winding.
2. Centrifugal switch to disconnect or change capacitor circuits.
3. Potential relay (occasionally used instead of centrifugal switches).
4. Repulsion-induction-type motor with wound rotor and commutator, which utilizes a centrifugally operated switch to short circuit the commutator at a predetermined speed.
5. Repulsion-induction-type motor with wound rotor and commutator and a squirrel-cage rotor winding which automatically comes into use near full speed needs no transfer device.

It is usually more practical to replace defective centrifugal switches than to repair them.

Authorized Engineering Information 9-17-1981.

3.4.9 Squirrel-Cage Rotors

Squirrel-cage rotors are more rugged and, in general, require less maintenance than wound rotors. Open circuits or high-resistance joints between the end rings and the rotor bars may give trouble. The symptoms of such conditions are generally the same as with wound-rotor motors; that is, slowing down under load and reduced starting torque. A check should be made for evidence of heating at the end ring connections, particularly when shutting down after operating under load.

Fractures in the rotor bars usually occur between the point of connection to the end ring and the point where the bar leaves the laminations. Discolored rotor bars are evidence of excessive heating.

Brazing or replacing broken bars requires considerable skill. Unless a capable serviceman is available, the manufacturer's nearest office or an experienced service shop should be consulted before attempting such repairs at the plant.

Authorized Engineering Information 9-17-1981.

3.5 SYNCHRONOUS MOTORS AND GENERATORS

3.5.1 Stator

Maintenance of the stator of a synchronous machine involves keeping the machine clean and dry, providing an adequate supply of cool, dry, ventilating air and operating the machine within its rating. In larger size synchronous machines the windings are more accessible for cleaning.

Authorized Engineering Information 9-17-1981.

3.5.2 Rotor Field Coils

The rotor field coils of a synchronous machine should be cleaned in the same manner as the field coils on a direct-current machine. Slow-speed synchronous machines have rotor poles held to the spider with studs and nuts while on high-speed synchronous machines a dovetail construction is used with tapered wedges securing the poles. Some four-pole and some low-speed rotors use a one-piece pole and spider punching.

Other synchronous machines have the poles bolted to the shaft using bolts through the poles. Some 400-cycle synchronous generators use a laminated field structure with coils placed in slots, each tooth representing a pole.

During any general overhaul, the nuts on the studs or the wedges for the dovetail poles should be checked for looseness. The amortisseur winding should be checked for loose or cracked connections.

Authorized Engineering Information 9-17-1981.

3.5.3 Collector Rings and Brushholders

In dusty installations where collector ring enclosures are not used, the collector rings and brushholders should be blown off weekly with clean dry air. When oil deposits form on the collector ring or brushholder insulation, it should be cleaned while the unit is at rest by wiping with a lintless cloth moistened with a suitable solvent and coated with a high gloss insulating varnish. When cleaning the brushholders, the brushes should be removed to prevent their absorbing the solvent.

All insulated surfaces of the brushholders should be coated with a high gloss insulating varnish, but the slip rings should not be coated.

If the collector rings become eccentric, grooved, pitted, or deeply scratched, they can be corrected by grinding the rings with a rotating-type grinder with the machine running at rated speed in its own bearings. Fine emery cloth or sandpaper can be used for light scratches on *iron* or *steel* rings, but emery cloth should never be used on bronze rings.

Whatever method used, rings should be polished to a high gloss with crocus cloth and oil. After polishing, the rings should be thoroughly cleaned with a solvent to remove all abrasives and foreign materials.

Authorized Engineering Information 9-17-1981.

Copyright National Electrical Manufacturers Association
Provided by IHS under license with NEMA
No reproduction or networking permitted without license from IHS
Not for Resale

3.5.4 Electro-Chemical Action

Since the electro-chemical action is not the same on both the positive and negative collector rings, it is suggested that the polarity be reversed about every three months of operation to compensate for this condition.

Authorized Engineering Information 9-17-1981.

3.5.5 Field Current

On all 1.0 power factor synchronous motors the field current on the nameplate is for rated load. If the motor is overloaded, the field excitation should be increased as required to maintain 1.0 power factor.

Authorized Engineering Information 9-17-1981.

3.6 CLEANING AND VARNISHING WINDINGS

3.6.1 Life

The life of a winding depends upon keeping it in its original conditon as long as possible. In a new machine, the winding is snug in the slots and the insulation is fresh and flexible and has been treated to be resistant to the deteriorating effects of moisture and other foreign matter.

A. Moisture

Moisture is one of the most subtle enemies of the insulation on rotating electrical machinery. Insulation should be kept dry. Certain modern types of insulation are inherently moisture proof and require infrequent varnish treatment, but the great majority, if exposed to a damp atmospheric place, should be given special moisture-resisting treatment.

B. Vibration

One condition which frequently hastens winding failure is movement of the coils caused by vibration during operation. After insulation dries out, it loses its flexibility. Mechanical stresses caused by starting and plugging, as well as natural stresses in operation under load, sometimes precipitate short circuits in the coils and possibly failures from coil to ground, usually at the point where the coil leaves the slot.

C. Varnish Treatments

Periodic varnish treatment and curing, properly done to fill all air spaces caused by drying and shrinkage of the insulation, provides an effective seal against moisture and should be a matter of routine electrical maintenance. Varnish treatment and curing of rotating electrical equipment should follow a logical procedure.

Authorized Engineering Information 9-17-1981.

3.6.2 Cleaning

Some machines are exposed to accumulations of such materials as talc, lint, or cement dust which, although harmless in themselves, may obstruct the ventilation. The machine will then operate at a higher temperature than normal, and the life of the insulation will be decreased. Such materials can sometimes be blown out with compressed dry air, but the pressure should not exceed 35 psig. Care should be exercised not to blow the contaminants into even more inaccesible areas of the machine. Thus, a vacuum or suction is preferable for cleaning.

The most harmful types of foreign materials include carbon black, metallic dust and chips, and similar substances which not only impair the ventilation, but also form a conductive film over the insulation and increase the possibility of insulation failure. Metallic chips may also work themselves into the insulation because of the vibration and magnetic fields. When windings are cleaned, an inspection should be made for any signs of deterioration.

Epoxy-encapsulated windings are sealed against contaminants. They need little attention other than removing dirt accumulations. The common practice when such windings are damaged is replacement with a new winding.

It is extremely important that all wound stators and rotors be perfectly clean before varnish treatment and curing. Unless all conducting dirt and grease is removed, the varnish treatment will not be fully effective. Also, after varnish treatment, the leakage path caused by conducting materials will be difficult to uncover and remove.

Proper cleaning involves the following steps:

1. Dirt should be removed from all coil surfaces and mechanical parts. Air vent ducts should be clear. As an alternate, clean dry air at a pressure of not more than 50 pounds per square inch may be used. Higher air pressure may damage windings. Air should not be used if dust from the machine can damage critical equipment nearby.
2. All possible oil, grease, and dirt should be removed by wiping the windings with clean dry cloths and then with clean cloths which have been moistened with a solvent recommended by the coil manufacturer. If the original varnish on the windings is cracked, a brush should be dipped in solvent and used to clean all conducting particles from the cracks.

Copyright National Electrical Manufacturers Association
Provided by IHS under license with NEMA
No reproduction or networking permitted without license from IHS

Not for Resale

3. For cleaning, armatures, or wound rotors should be placed in a vertical position with the commutator or collector ring end up. A pressure spray gun with solvent should be used to clean under the collecting device and through vent holes. The same procedure should be repeated with the opposite end up and then repeated with the commutator or collector ring end up.

Most large direct-current armatures are ventilated through open commutator risers at the front end. With special precautions, machines may be cleaned by experienced personnel using water and detergent applied under low pressure at a moderate temperature. When using this method, the recommendations of the coil manufacturer should be followed.

4. Silicone insulated equipment can be cleaned by the same methods used with other insulation systems. If a liquid cleaner is found to be necessary, the recommendations of the coil manufacturer should be followed.

5. For windings other than silicone, there are a number of good commercial cleaners on the market. The manufacturer can recommend the one most suitable for the conditions. The plant safety rules concerning the use of flammable and toxic solvents should be observed and followed.

6. Caution should be exercised to remove all liquid cleaners.

Authorized Engineering Information 9-17-1981.

3.6.3 Drying for Varnish Treatment

The wound apparatus should be dried in an oven held at a temperature of 115 °C to 125 °C (239 °F to 257 °F) for 6 to 12 hours or until the insulation resistance becomes practically constant. If a vacuum is used, the drying time may be reduced.

The apparatus should be brought up to temperature slowly because excessive moisture may be present in the windings. If heated rapidly, this moisture may vaporize quickly enough to rupture the insulation.

Before treatment, the apparatus should be cooled to within 10 °C (50 °F) above room temperature, but never to a temperature lower than 25 °C (77 °F). If the apparatus is cooled to room temperature and allowed to stand, it will take up moisture quickly. If placed in the varnish at a temperature higher than that specified, the varnish will tend to harden.

Authorized Engineering Information 9-17-1981.

3.6.4 Varnish

A. Selection

The selection of varnish is dependent upon the operating conditions to which the motor is subjected. The type of atmosphere, that is, moisture, corrosion, chemical, abrasion, and so forth, should also be considered.

A varnish must be compatible with the insulation system with which it is to be used. If it is incompatible, it may not adhere and may not give the desired protection.

For most applications, the selection of a general-purpose high-bonding, yet resilient, synthetic resin varnish is recommended. The varnish can be either Class A, Class B, or Class F, depending upon insulation system rating.

On large alternating-current stators using Class A insulation, the use of a flexible asphalt or oleoresinous varnish is suggested; then if it becomes necessary to lift a coil, the coil will not be destroyed.

The types of varnishes available include:

1. acrylics;
2. asphalt;
3. oleoresins;
4. modified phenolics;
5. modified polyesters;
6. epoxies;
7. silicones (on machines without brushes).

B. Viscosity

The actual viscosity of a varnish is the measure of its rate of flow when compared to that of distilled water. Viscosity varies with the type of thinner, type of solvent, percent of nonvolatile matter, and temperature. The instrument for measuring viscosity is a consistency cup, which can be obtained from any chemical supply house or varnish manufacturer, by which the number of seconds required for the varnish to flow through an orifice is taken as a measure of this characteristic. Another is the thermo hydrometer. If viscosity is increasing rapidly and specific gravity remains constant, this change should be brought to the attention of the supplier at once.

When new varnish is added to the tank, the varnish should be thoroughly stirred until the mixture is uniform. The varnish may be mixed by a suitable motor-driven stirrer or by pumping it back and forth between the storage tank and the impregnated tank.

C. Application

In applying the insulating varnish, the recommendation of the manufacturer should be followed with respect to specific gravity, viscosity, and curing cycle for the particular varnish in question. After the varnish has been adjusted to give the desired film build and drainage characteristics, the specific gravity and viscosity readings should be recorded;

Copyright National Electrical Manufacturers Association
Provided by IHS under license with NEMA
No reproduction or networking permitted without license from IHS
Not for Resale

then, at periodic intervals the varnish should be examined for either specific gravity or viscosity, or both, and adjustments should be made to bring it within the original limits.

D. Coats and Curing

The units should be cured in a forced air circulating oven, properly ventilated, to remove the solvent vapors. The oven can be either gas fired or electrically heated. Infrared heat can be used if desired. A baking oven is illustrated in Figure 3-4.

Usually, the time and temperature of the cure should follow the varnish manufacturer's recommendations. The time of cure will vary from short bakes of several hours through 16 to 24 hours, based on the physical dimensions and makeup of the units, and considering the particular characteristics of the type varnish which has been applied to the equipment.

Curing temperatures will vary from 75 °C to 125 °C (167 °F to 257 °F) for oleoresinous-type varnishes to 135 °C to 155 °C (275 °F to 311 °F) for Class B and Class F varnishes. Silicone varnishes usually require a cure temperature range of 185 °C to 200 °C (365 °F to 392 °F) or higher.

Complete rewinding jobs should receive at least two coats of varnish. Baking time can usually be reduced on the first or impregnated coat, with an extended period of time used on the final coat. The use of additional coats is based on what is expected of the unit after it is in operation. If severe conditions are to be encountered, multiple-coat systems are recommended. Also, apparatus such as high-speed armatures should receive multiple coats for the maximum bonding of the conductors.

Only one coat is necessary on older units which have been cleaned up and on which no rewind work has been done.

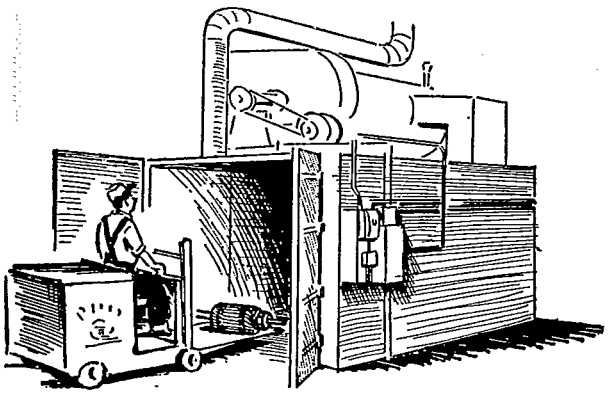

Figure 3-4
BAKING OVEN

In the case of large stators or rotors where dipping is not possible due to size, the varnish may be sprayed, flooded, or brushed on the windings. Old winding surfaces must be completely coated.

For most applications, conventional dip methods are recommended. Other accepted methods are brushing and flooding. However, if the length or depth of the slots is great and the windings tightly packed, it may be necessary to use a vacuum impregnation system.

Authorized Engineering Information 9-17-1981.

3.7 LUBRICATION

3.7.1 General

Of all the important items of maintenance, lubrication ranks as one of the highest. Improper oiling or greasing will produce as disastrous results as any other type of motor mistreatment.

Excess oil may get into the windings where it will collect dust and other foreign matter. Too much grease in antifriction bearings causes heat and sometimes failure of bearings and may also coat the windings. Most manufacturers furnish data on proper oiling and greasing, and numerous articles have been written on the subject. The important point is to set up a definite lubrication schedule and follow it.

Years of experience have demonstrated that it is as bad to use too much as too little oil and grease.

Of equal importance is the type of oil or grease used. In general, the recommendations of the manufacturer or experienced oil companies should be followed. For design reasons, manufacturers occasionally insist on the use of particular lubricants which have been adopted after exhaustive tests by their engineers. It will pay to follow these recommendations.

Authorized Engineering Information 9-17-1981.

3.7.2 Sleeve Bearings

Some oil-lubricated machines are shipped without oil and, in the case of large machines, the journals are often packed and treated for protection during shipment. The rotating elements may also be blocked to prevent damage to the bearings and journals during shipment. Where lubrication is required, the bearing must be opened, the packing removed, and the journal cleaned and flushed before filling the housing with oil. All motor and generator bearings should be checked for oil before starting up. Oil levels during standstill and operation are shown in Figure 3-5. Another sleeve bearing illustration is shown in Figure 3-6.

Copyright National Electrical Manufacturers Association
Provided by IHS under license with NEMA
No reproduction or networking permitted without license from IHS
Not for Resale

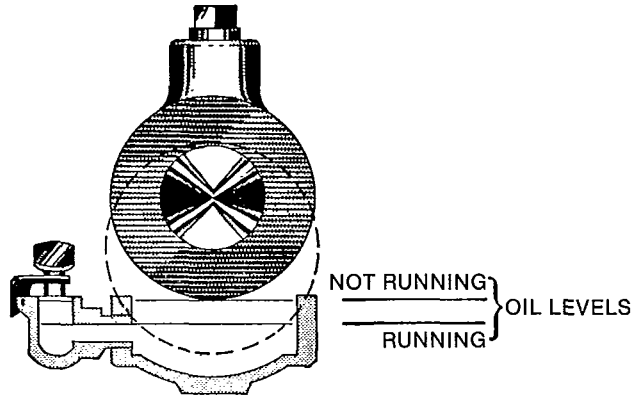

Figure 3-5
OIL LEVELS AT STANDSTILL AND AT OPERATION

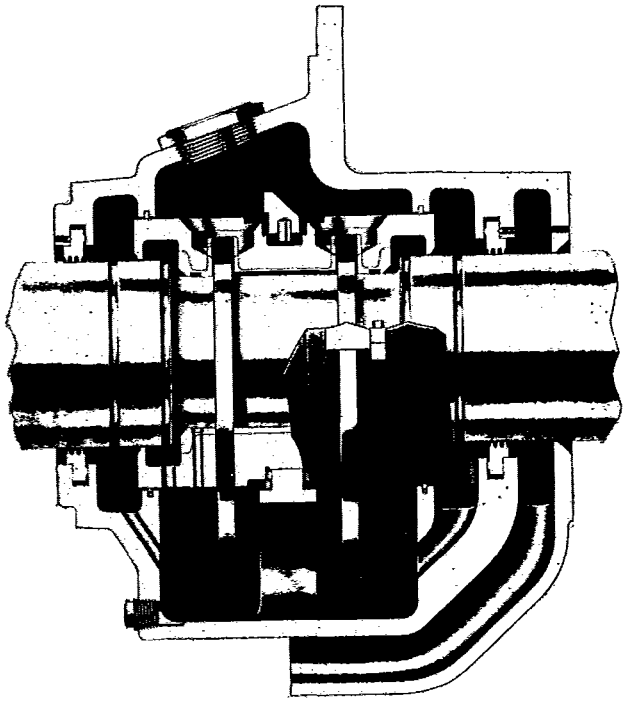

Figure 3-6
SLEEVE BEARING

The bearings of all electrical equipment should be carefully inspected at scheduled periodic intervals in order to obtain maximum life. It is recommended that oil be checked approximately every six months, depending upon such conditions as cleanliness and severity of service or continuity of service, and the oil reconditioned or changed when the neutralization value approaches a value of 1.0 for dry oil (0.5 for wet oil). When oil is changed, the system should be thoroughly cleaned and flushed. Should it ever become necessary to add excessive amounts of make-up oil, an investigation for oil leaks should be started immediately.

More modern types of sleeve-bearing housings are relatively dust and oil tight and require very little attention, since the oil does not become contaminated and oil leakage is negligible. Maintenance of the correct oil level is frequently the only upkeep required for years of service with this type of bearing.

Older types of sleeve bearings require more frequent inspection and checking for wear, and oil changes should be made more often. *Never add oil to bearings when the machine is running.*

In most cases, the safe temperature rise for a bearing is considered to be within 40-50°C above the room ambient.

Small sleeve bearing motors use either wool packing or fluid-wick for transferring the lubricant to sleeve bearings instead of oil ring lubrication. Some of these small motors have provision for relubrication.

When electrical equipment must operate under extreme differences in air temperatures, the use of a lighter oil may be found desirable during cold weather.

Care should always be exercised in the use of reclaimed lubricating oils. The filtering operation should be positive and should remove all foreign and injurious matter.

A hot bearing is usually due to one of the following causes:

1. No oil;
2. A poor grade of oil, or dirty oil;
3. Failure of the oil rings to revolve with the shaft;
4. Excessive belt tension;
5. Rough bearing surface;
6. Improper fitting of the bearing;
7. Bent shaft;
8. Misalignment of shaft and bearing;
9. Loose bolts in the bearing cap;
10. Excessive end thrust, due to improper leveling; a bearing may become warm because of excessive pressure exerted by the shoulder of the shaft against the end of the bearing.
11. Excessive end thrust due to magnetic pull, with the rotating part being "sucked" into the stator or field because it extends beyond the magnetic structure or field poles further at one end than at the other end;
12. Excessive side pull because the rotating part is out of balance.

Copyright National Electrical Manufacturers Association
Provided by IHS under license with NEMA
No reproduction or networking permitted without license from IHS
Not for Resale

If a bearing becomes hot, the load should be reduced if possible and lubricants fed freely, loosening the nuts on the bearing cap. If the machine is belt connected, the belt should be slackened. In case relief is not afforded, the load should be removed and the machine kept running slowly, where possible, until the shaft is cool in order that the bearing will not "freeze". The oil supply should be renewed before starting the machine again.

A new machine should always be run unloaded or at slow speed for an hour or so to make sure that it operates properly. The bearings should be carefully watched to observe that the oil rings revolve and carry a plentiful supply of oil to the shaft.

Generators with automatic voltage regulators should not be run below normal speed limits with the field energized so that possible field overheating be avoided. The field should be open when this run is made.

Authorized Engineering Information 9-17-1981.

3.7.3 Antifriction Bearings

Ball or roller bearings carry the load by direct contact, as opposed to sleeve bearings which carry the load on lubricating film. Lubrication is necessary to minimize the friction and generation of heat caused by the balls rubbing on the outer race as they roll over the top.

On some heavily loaded machines, a so-called free-fit type of bearing must be used. This is nothing more than a standard ball or roller bearing with increased clearance. This point should be watched in replacing bearings, since for many years there was no marking on the bearing to indicate that it was a free fit. Bearing manufacturers usually add a designation, such as C3 after the number to indicate clearance.

Antifriction bearings require considerable care to prevent loss of end clearance, distortion of balls, and marking of races. If too much force is used in pressing the bearing on the shaft, the clearance may be destroyed. It is recommended that antifriction bearings be heated in a hot bath of clean oil rather than by the use of dry heat. When the bearing is pulled off with all of the stress on the outer race, both races may be damaged, with resultant failure when put back in service. The bearing manufacturer's recommendations should be followed when removing and reapplying this type of bearing.

Bearing manufacturers produce a bearing known as the prelubricated shielded bearing. Several years' use of this bearing has demonstrated that, for many applications, no further lubrication is needed. Such bearing construction is usually indicated on the nameplate.

Generally, to obtain maximum service, ball-bearing motors should be relubricated at intervals determined by the type, size, and service of the bearing. Many motor manufacturers offer as a guide a table suggesting the intervals between lubrication. These show time intervals between greasings which range from three months or so for motors operating in very severe service, such as those involving dirty, vibrating applications or those where the end of the shaft is hot, high ambient, and so forth, to three years for easy service where motors operate for short periods or infrequently.

The bearing housing is usually arranged to introduce new grease and purge the bearing of old grease, allowing it to discharge through a partially restricted escape port or relief hole. This will, in general, allow filling to the desired degree, which is one-third to one-half full, leaving some space in the housing to allow for expansion of the grease.

It is again stressed that overgreasing can be just as harmful as undergreasing. Overgreasing causes churning and internal friction which results in heating, separation of the oil and soap, oxidation of the grease, and possible leakage through the retaining seals.

Authorized Engineering Information 9-17-1981.

3.7.4 Installation of Oil Seals

The importance of properly installing an oil seal cannot be overemphasized. Failure to observe correct installation procedures probably accounts for more cases of the improper functioning of the oil seals than any other single cause. To secure the ultimate satisfactory service, it is recommended that the following precautions be observed:

A. Correct Seal

It is essential that the seal be the correct size for the installation. Oil seals are made for a specified shaft size. When they are installed on one of a larger diameter, there will be drag, frictional heat, and excessive wear on sealing element and shaft. When installed on a shaft having a smaller diameter, immediate leakage can occur.

B. Fluid Contact

The seal should be assembled with the toe or wiping edge of the sealing element pointing toward the fluid to be retained. (See A in Figure 3-7.) For

Copyright National Electrical Manufacturers Association
Provided by IHS under license with NEMA
No reproduction or networking permitted without license from IHS
Not for Resale

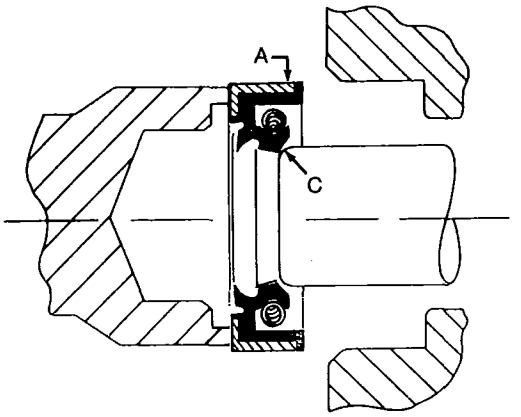

Figure 3-7
OIL SEAL

unusual applications refer to specifications in manuals or instructions furnished with the assembly.

C. Bore

The bore should be checked for adequate chamfer (30 degree angle to a minimum depth of 1/16 inch). The bore should be inspected for scratches and all sharp edges removed. The seal's outside diameter should be correct for the bore in the assembly. When a leak at the outer edge of either metal- or rubber-covered seals is caused by abrasion of the oil seal, it may be directly related to improper chamfer on the bore or the use of improper installation tools.

D. Shaft

The surface of the shaft should be uniform and free from burrs, nicks, scratches, and grooves. The surface finish should be between 15-20 microinches for two-pole machines and 30-35 microinches for machines with 4 or more poles. A repair job should be buffed to this finish with crocus cloth.

E. Lubrication

In all cases a lubricant should be applied to the shaft or to the sealing element of the oil seal. This aids installation and reduces heat build-up during the first few minutes of run. The application of a lubricant to the outer periphery of a synthetic rubber-covered seal will reduce the possibility of shearing or bruising.

F. Pressing Tools

In pressing the seal into the bore, it is imperative that the proper size pressing tool be used to localize the pressure on the face of the seal and in direct line with the side walls of the seal case (see Letter A, Figure 3-7) to prevent damage and distortion to the seal cases during the installation. When a seal must penetrate the bore below the surface, the proper pressing tool should be 1/32 inch smaller than the bore diameter (see Figure 3-7). On installations where the seal is flush with the housing, the proper pressing tool should be at least 1/8 inch larger in diameter and more if room permits (see Letter B, Figure 3-8). Care should be taken to avoid hammer blows, uneven pressure on seal surfaces, and cocking of the seal during this operation.

When an oil seal of open channel construction is pressed-fit heel first into the bore, an installation tool will be helpful (see Figure 3-9). The tool is designed to have contact with the inside diameter of the seal case.

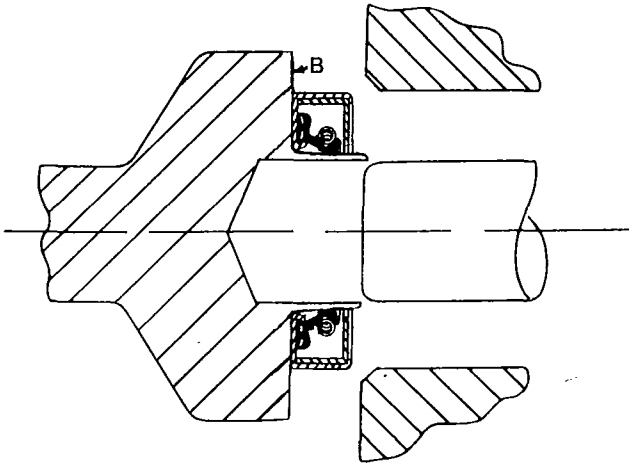

Figure 3-8
OIL SEAL

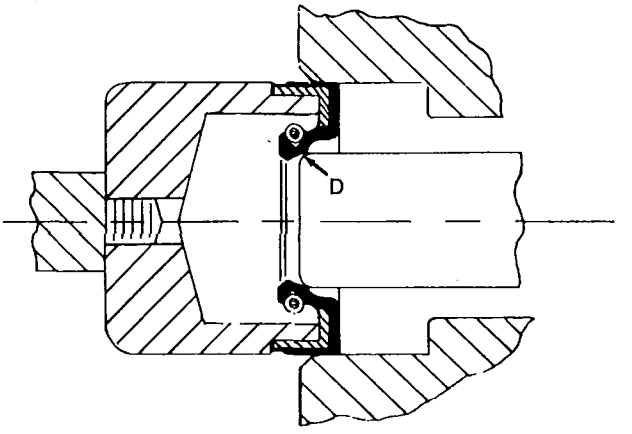

Figure 3-9
OIL SEAL

Copyright National Electrical Manufacturers Association
Provided by IHS under license with NEMA
No reproduction or networking permitted without license from IHS
Not for Resale

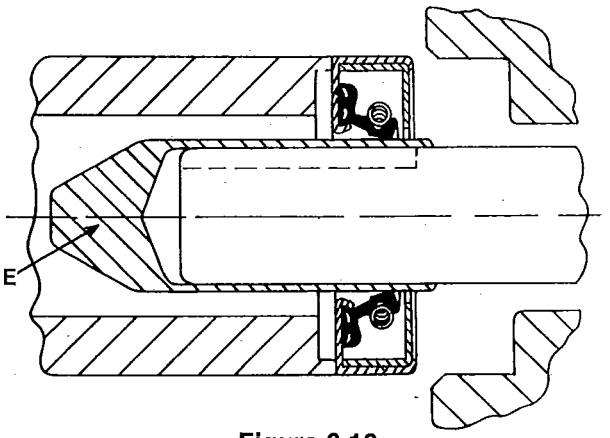

Figure 3-10
OIL SEAL

G. Shaft End

If the seal is to be installed toe first, the end of the shaft should have a 30 degrees × 3/16 inch taper (see Letter C, Figure 3-7), or an installation tool should be used. If the seal is to be installed heel first, no special precautions are necessary other than to remove burrs or sharp edges from the end of the shaft (see Letter D, Figure 3-9).

H. Shafts With Keyways, and So Forth

When an oil seal is installed over the keyway, splines, and so forth, an installation thimble (see Letter E, Figure 3-10) should be used with the outside diameter not more than 1/32 inch over shaft (see Figure 3-10).

I. Pressure Lubricated Bearings

Because of speeds and bearing loading, it is necessary to pressure lubricate the bearings on some larger motors and generators. Pressure gage readings may not show the amount of oil flowing but machines have a slight oil flow detector where oil flow may be checked. Orifices in the feed lines may clog and oil flow detection devices will protect the bearings.

J. Bearing Insulation

If the bearing is insulated, care should be taken so that the insulated bearing is not grounded by bearing temperature detectors or relays.

Authorized Engineering Information 9-17-1981.

3.8 BRUSHES

3.8.1 General

Proper care of brushes, brush rigging, and current collecting parts is a fundamental necessity if satisfactory performance is to be obtained. Adequate inspection is essential to the maintenance of this equipment, and the following points should be observed:

1. The brushholder box should be adjusted between 1/16 and 1/8 inch from the face of the commutator.
2. Care should be taken to see that dirt and particles broken from the edges of brushes or the commutator have not lodged in the face of the brush.
3. The brushes should be correctly aligned and the commutator brushes properly staggered, pairs of arms (+ and −) being set alternately.
4. A brush is affected by such adverse conditions as sparking, glowing, rough commutator, severe chattering, no-load running, overload running, improper spring pressure, and selective action.
5. A brush on a machine that sparks or glows due to load conditions, off-neutral operation, or an electrical fault in the machine will be burned and pitted near the sparking edge.
6. Severe chattering of the brush is caused by a high-friction film on the surface of the commutator or by improper spring pressure.
7. Brush chattering due to a high-friction film occurs on machines where there is considerable no-load or light-load running. The characteristic curve of friction versus load current is of such a shape that minimum friction can be obtained at approximately 55 amperes per square inch, and as load current is either reduced or increased, the brush friction is increased. Accordingly, it is sometimes good practice, when a machine is running at very light loads for a considerable period of time, to lift one or more brushes per arm to bring the brush friction into the desirable range. Cases where the load current is above the normal values are more serious because the higher currents simultaneously produce sparking, overheating of the machine, and brush chatter.
8. The spring pressure has a direct effect on the riding characteristics of a brush. A common error is to reduce spring pressure for brush wear or marking of the commutator. This permits the brush to bounce on the commutator which, in turn, causes sparking and selective action and produces a rough commutator. On the other hand, excessive spring pressure causes brush wear, and commutator wear, and usually lowers the electrical contact voltage drop to the point where satisfactory commutation is not obtained. Correct spring pressure should be 2½ to 5½ pounds per square inch for industrial service and 5 to 10 pounds per square inch for traction service. The lower range on trac-

Copyright National Electrical Manufacturers Association
Provided by IHS under license with NEMA
No reproduction or networking permitted without license from IHS
Not for Resale

tion work will be found where spring-supported motors are used: axle-hung motors use the higher range.

9. When checking spring pressure, the action of the brush in the box should be free. Dirt or gummy oil on the brush or in the brush box sometimes causes the brush to stick and occasionally to completely break the contact between the brush and the commutator.

10. Commutator wear in various forms is frequently attributed to a brush which is too hard. Actually, the abrasiveness of a brush does not result from its hardness. Some of the most abrasive brushes are soft to the touch or low when measured for scleroscopic hardness. The property in a brush of given grade which causes abrasiveness is controlled by the brush manufacturer, and he should be consulted for information as to the relative cleaning properties of the various grades.

Authorized Engineering Information 9-17-1981.

3.8.2 Brush Adjustment

The brushes of a new machine are generally adjusted at the factory to the electrically neutral position, and it should not be necessary to change the adjustment. An exception may occur on large machines where an off-neutral setting is sometimes used to improve commutation. In any case, the method for identifying the proper brush position can usually be found in the manufacturer's instruction book. Various methods may be used for determining the neutral position. The "kick method" is commonly used and is outlined here.

With all brushes raised from the commutator and the machine standing still, voltages will be induced in the armature by transformer action if the shunt field is excited to about one-half of its normal strength and the field current suddenly broken. It will be found that the induced voltages in conductors located at equal distances to the right and left of the main pole centers will be equal in magnitude and opposite in direction.

Hence, if the terminals of a low-reading voltmeter (5 volts) are connected to two commutator bars on the opposite side of a main pole and exactly halfway between the centerlines of two main poles, the voltmeter will show no deflection when the field current is broken. The spacing of these commutator bars is, therefore, the correct distance between brushes on adjacent brush arms.

The most practical method of making this check is to make two pilot brushes of wood or fiber to fit the regular brushholder, each brush carrying in its center a piece of copper fitted for line contact with the commutator bar. With a lead for the connection of adjacent brush arms, the brush rigging may then be shifted slightly forward or backward, as necessary, until breaking the field current produces no deflection on the voltmeter.

By noting the position at which no deflection is obtained for each pair of brush arms, the average of the positions of neutral thus obtained will give the correct running location for the brushes.

A quick and convenient method of locating the neutral position on a direct-current motor with shunt fields is to check the speed of the motor in either direction with the same impressed line voltage. The position of the brushes which produces the same speed in either direction under the same voltage conditions is the correct neutral position.

Another short cut is to take a piece of lamp cord and bend it in the middle bringing the two ends together. The insulation should be removed for ½ inch on each each end and the bare wires twisted together, fanning out to form a brush. When this brush is held so that it spans two bars at the outer end of the commutator and is moved with and against the direction of rotation, the point of least sparking at the ends of the wires is the proper location for the centerline of the brushes.

Authorized Engineering Information 9-17-1981.

3.9 BALANCING

3.9.1 General

Electrical failures are often ascribed to deteriorated insulation, open circuit, short circuit, and so forth; but in many cases, failure of insulation results from mechanical distrubances.

Unusual noises in electrical apparatus may be the result of grounds, short-circuited coils, changes in voltage or frequency, rubbing or looseness of parts, vibration, defective bearings, and many other causes.

Any unusual amount of vibration or an increase in machine vibration should be investigated immediately. Common causes of undue vibration, other than imbalance, are bearing wear, dirt accumulation, misalignment, an improper or a settled foundation, uneven air gap, parts rubbing the rotating element, sprung shafting, a short-circuited field coil, or imbalanced stator currents in the case of alternating-current machines. These should be investigated before balance weights are added or shifted. If at any time it should be necessary to remove the balance weights, they should be replaced in the same position.

Before disassembling a pole on high-speed machines, the axial position of that pole should be

Copyright National Electrical Manufacturers Association
Provided by IHS under license with NEMA
No reproduction or networking permitted without license from IHS
Not for Resale

accurately marked so that it can be replaced in the same position.

If it becomes necessary to replace a field coil, or a complete pole, the balance must be checked.

Authorized Engineering Information 9-17-1981.

3.9.2 Dynamic Balancing

Balancing is a process in which the distribution of mass in a rotating body is altered to eliminate vibrations at the bearings supporting the body. Figure 3-11 illustrates dynamic balancing.

Authorized Engineering Information 9-17-1981.

3.9.3 Need for Balancing

The vibrations produced by rotating parts which are not balanced can result in the following:

1. Excessive bearing wear;
2. Noisy operation of the equipment;
3. Failure of structural parts;
4. Reduced overall mechanical efficiency;
5. Vibration of machine parts or the supporting structure.

Authorized Engineering Information 9-17-1981.

3.9.4 Unit of Balance Measurement

Ounce-inches is generally the measurement used. An imbalance of 1 ounce-inch in a rotating body will produce a centrifugal force equivalent to that produced by 1 ounce of weight 1 inch from the rotational axis. A rotor weighing 62.5 pounds (1000 ounces) whose mass center is displaced 0.001 from the rotational axis is 1 ounce-inch out of balance.

Authorized Engineering Information 9-17-1981.

3.9.5 Methods for Measuring Imbalance

Only force imbalance is measured by static balancing which is a single-plane correction. The part being balanced is not rotated. Dynamic balancing of a part by rotation is required when there is appreciable axle length because, by this method, force imbalance, moment imbalance or a combination of both may be measured.

Authorized Engineering Information 9-17-1981.

3.9.6 Correcting Imbalance

The balancing process is not complete until corrections have been applied of the size and at the

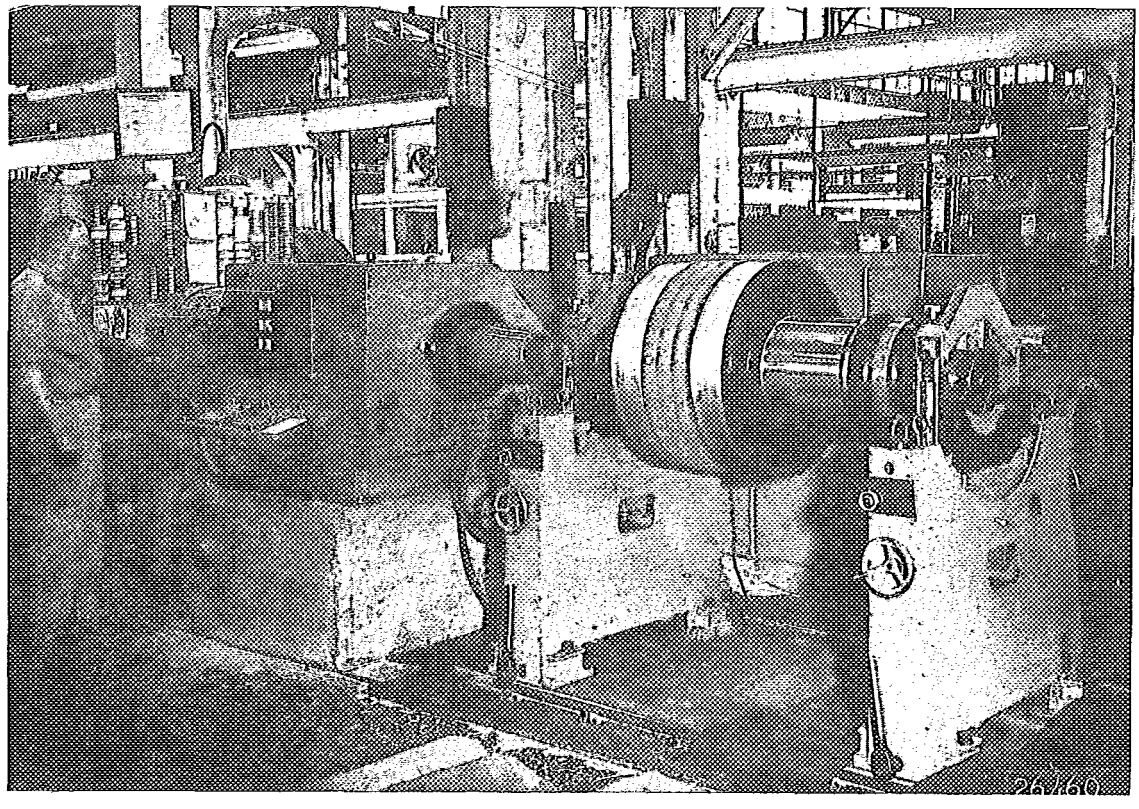

Figure 3-11
DYNAMIC BALANCING

Copyright National Electrical Manufacturers Association
Provided by IHS under license with NEMA
No reproduction or networking permitted without license from IHS

Not for Resale

exact location indicated by the balancing machine. Corrections for balance may be made by the addition or removal of metal.

Authorized Engineering Information 9-17-1981.

3.9.7 Accuracy of Correction for Balance

Machine speed determines the necessity for the accuracy of correction for balance. When in doubt, the original manufacturer should be asked for his balancing specifications to determine the following:

1. Points where material may be added or removed.
2. Limitations on the amount of correction to meet requirements for strength, clearance, and the like.

Authorized Engineering Information 9-17-1981.

3.10 BELTS, GEARS AND PINIONS

3.10.1 Belts

In most industrial organizations, installation, adjustment, inspection and care of belts is the responsibility of a specially trained individual or group. The application of belts involves alignment and belt tension which affect bearing operation. It is necessary for the maintenance inspector to report belt alignments which seem inaccurate, tensions which appear excessive and splices which look doubtful. He may question drives having upward belt tension. Bearing loads on sleeve bearing motors should not be against that portion of the bearing where the oil is fed into the bearing. Action should be taken to protect the electrical apparatus when there is evidence of belt-produced static.

Authorized Engineering Information 9-17-1981.

3.10.2 Gears and Pinions

Gears and gear trains are among the principal sources of noise and vibration. In designing such mechanisms, the manufacturer strives for the best tooth form to give the least amount of whip and backlash, with the gear center located so that the teeth mesh at the proper pressure points.

It is essential, therefore, that the bearings be maintained so that these gear center distances do not change. Proper lubrication of gears is essential to reduce teeth wear. A gear with worn teeth, even though it appears to have considerable life left in it, should be replaced to minimize vibration and noise.

Authorized Engineering Information 9-17-1981.

Copyright National Electrical Manufacturers Association
Provided by IHS under license with NEMA
No reproduction or networking permitted without license from IHS
Not for Resale

Section 4
PERFORMANCE

4.1 COILS

4.1.1 Classification

The index described in the following paragraphs groups the insulation classifications by letters as contained in IEEE Standard No. 1 (1969) and shall be used in combination with additional letters "N", "X", and "V", the letter having been assigned by the Renewal Parts Section of NEMA.

The first letter of the index is the IEEE Classification Symbol for the conductor insulation, the second the ground insulation, and the third the outside binding tape. The substitution of "n" indicates the absence of that particular insulation. The fourth letter, if present and if "X", indicates slot size or, if "V", indicates vacuum and pressure impregnation. The fifth letter "V", if present, is used when there are already four letters and indicates vacuum and pressure impregnation.

Example—ABAX means Class A conductor insulation, Class B ground insulation, Class A outside binding tape. The X indicates that the coil is slot size and normally does not require a slot cell.

NEMA Standard 9-17-1981.

4.1.2 Tests

Coils shall be manufactured so they will pass the following tests:

A. STATOR COILS

1. Coils—550 volts maximum operating voltage—including both random and form wound coils. Turn-to-turn should be checked by placing coils on a 60-cycle or higher frequency growler or by the use of any other acceptable method. With a growler, defective coils will get hot.

2. Coils operating at 2300 volts and higher. The turn-to-turn test voltage shall be a function of the coil construction. The thickness and type of insulation between turns determines the value of the test voltage. Each coil shall be high-frequency tested in accordance with the following:

a. Varnished fibrous wire insulation—40 volts per mil of insulation.

b. Enamel or film-type insulation—80 volts per mil of insulation.

c. Mica tape—50 volts per mil of insulation.

3. Coils with a crossover such that more than one turn exists between adjacent wires shall have 1500 volts high frequency applied at the leads.

4. Coils for special applications or with unusual configurations shall be tested in accordance with the principles outlined for standard coils and at voltages which will search out weak or damaged insulation.

B. ARMATURE COILS

1. Single turn strap coils.

a. Coils of this type using varnished fibrous insulation, enamel, or film insulation shall be tested at 50 volts alternating current between individual conductors.

b. Coils of this type using single, double or triple varnished fibrous insulation over enamel or film shall be tested at 750 volts alternating current between individual conductors.

c. Coils of this type using mica tape shall be tested at 1000 volts alternating current between individual conductors.

2. Multi-turn random, or form wound coils shall be tested in a 60-cycle or higher frequency growler or other acceptable method.

C. FIELD COILS

1. Shunt field coils shall pass one or more of the following tests:

a. Resistance shall not vary more than ± 5 percent;

b. Direct-current voltage drop across individual coils shall not vary more than ± 5 percent;

c. Any other acceptable method of obtaining an accurate measure of resistance and voltage drop with ± 5 percent.

2. Series filed coils shall pass one or more of the following tests:

a. Resistance shall not vary more than ± 5 percent;

b. Coils shall pass a 60- or 400-cycle growler test;

c. In some cases, an alternating-current impedance test shall be applied; the reading shall not vary more than ± 5 percent.

3. Commutating field coils shall be tested in the same manner as series field coils.

4. Synchronous motor field coils shall pass one or more of the tests outlined for shunt or series field coils. Resistance of individual coils shall not vary more than ± 5 percent. Voltage drop and/or the application of a growler test at 60- to 400-cycles alternating current shall depend on the number of turns.

Copyright National Electrical Manufacturers Association
Provided by IHS under license with NEMA
No reproduction or networking permitted without license from IHS
Not for Resale

5. All turn-to-turn testing of filed coils shall be nondestructive, yet capable of searching weak or defective insulation. Generally, a high-frequency growler may be used for coils up to approximately 100 turns. With more turns, a low-frequency (60-cycle) growler is used. Coils must be individually evaluated for adequate testing.

NEMA Standard 9-17-1981.

4.2 COMMUTATORS AND ASSEMBLED SEGMENTS

4.2.1 Material

A. COPPER

The copper bars shall be made from cold-drawn silver bearing copper, minimum of 8 ounces of silver per ton, in accordance with Table 4-1:

B. CONDITION OF BARS

All copper segments shall be carefully straightened and free from fins and burrs. Limitations on the thickness of segments shall coincide with the limits placed thereon by the manufacturer of the original equipment. Rockwell Hardness (B) shall be a minimum of 41B for bars which are 0.125 inch and less at the thick edge, a minimum of 34B for thicknesses over 0.125 up to and including 0.250 inch, and a minimum of 26B for thicknesses over 0.250.

C. MICA

Mica conforming with the current applicable NEMA Standards Publication for *Manufactured Electrical Mica,* shall be used for separation and insulation between the copper segments. Only those micas having a minimum of bonding material shall be employed. This precaution is taken to insure that maximum tightness may be retained under operating conditions.

NEMA Standard 9-17-1981.

4.2.2 Machining, Assembly, and Testing

A. BRUSH SURFACE

The brush surface of the commutator or assembled segments shall be concentric with the machined vees. Assembled segments shall be bound over the brush surface with banding wire for shipment.

B. UNDERCUTTING

Commutators and assembled segments are generally supplied with flush mica. In such cases, undercutting shall be done at the time the commutator is finish-turned on the armature.

C. SLOTTING

Copper segments shall be slotted to permit the proper ingress of the armature coil leads. Centerline shall be as close as practical to the centerline of the bar.

D. MACHINING THE VEES

The vees of the assembled segments shall be machined so that, when assembled with the steel parts and insulation, a tight commutator will result.

E. SEASONING

Commutators shall be seasoned at time of manufacture.

Commutator segment assemblies can be partially seasoned before shipment and seasoning completed after assembly on the commutator core. A commutator segment assembly should not be used until complete seasoning is achieved.

(This paragraph is designated Authorized Engineering Information 9-17-1981.)

F. PAINTING

Mica vee ring extensions on commutators shall be painted with a suitable protective coating for insulation purposes, or banded with insulated tape or string or both.

G. TEST

Commutators shall be given a complete electrical test. The ground test shall be in accordance with IEEE Standard No. 113 *Test Code for Direct-Current Machines* (1973) or the manufacturer's instruction.

NEMA Standard 9-17-1981.

4.2.3 Replacement of Commutator Segments

It is difficult to align individual commutator segments and achieve a tight commutator. To facilitate the replacement operation, copper and mica segments are combined into complete sets.

Authorized Engineering Information 9-17-1981.

Table 4-1
COPPER BAR SPECIFICATIONS

Tensile Strength, PSI	Reduction of Area, Percent	Elongation in 2 Inches, Percent	Rockwell Hardness	Minimum Conductivity, -- Percent
33,000-43,000	50 to 30	35 to 20	25 to 45(B)	98

Copyright National Electrical Manufacturers Association
Provided by IHS under license with NEMA
No reproduction or networking permitted without license from IHS
Not for Resale

Section 5
WINDING SUPPLIES FOR ALTERNATING- AND DIRECT-CURRENT MOTORS AND GENERATORS

5.1 INTRODUCTION

Section 5 has been prepared to assist purchasers in ordering winding supplies for the repair of alternating- and direct-current electric motors and generators of sizes from 1 to 200 horsepower and 150 kilowatts, which are used in various industrial applications, on mining and industrial locomotives, rail cars, and trolley coaches.

Authorized Engineering Information 9-17-1981.

5.2 CLASSES OF WINDING SUPPLIES

Winding supplies consist of the necessary insulation and other materials, except coils, required to wind direct-current armatures, alternating-current stators and wound rotors. It has been found from experience that certain groups of winding supplies are usually needed for various degrees of repair work, and that these groups generally fall into one of the following four classes:

Class 1 Winding Supplies

Class 1 winding supplies consist of the following as required:

1. Slot cells.
2. Slot fillers.
3. Slot U pieces.
4. Slot wedges.
5. Phase insulation.

Class 2 Winding Supplies

Class 2 winding supplies are cut or formed to shape ready for use. Some pieces require trimming during assembly. This class of winding supplies should be ordered when the customer has supplies of bulk materials, such as tapes, banding wire, solders, varnish, and so forth.

Class 2 winding supplies consist of the following as required:

1. Class 1 winding supplies;
2. Insulation strips between coil layers;
3. Coil support insulation for both front and rear;
4. Equalizer assembly insulation and connecting rivets;
5. Wedges for commutator risers;
6. Spacers between coil ends;
7. Insulation caps for commutator risers;
8. Copper fillers between armature leads in commutator risers;
9. Coil lead connectors;
10. Insulation caps for coil lead connectors;
11. Banding insulation;
12. Banding clips.

Class 3 Winding Supplies

Class 3 winding supplies consist of the following, as required:

1. Class 2 winding supplies;
2. Tape;
3. Twine;
4. Solder and flux or brazing alloys where required;
5. Banding wire (if resin-filled glass is provided, in place of banding wire, the banding insulation and banding clips are not necessary);
6. Cable for internal connections;
7. Cement;
8. Varnishes.

Class 4 Winding Supplies

Class 4 winding supplies consist of the following, as required:

1. Class 3 winding supplies;
2. Terminals;
3. Lead cables;
4. Terminal blocks;
5. Cleats or any special hardware or supports needed;
6. Segmental bands with keys and wedges.

Authorized Engineering Information 9-17-1981.

5.3 PARTIAL SETS OF WINDING SUPPLIES

When partial sets of winding supplies are needed, the order should include only the items necessary to install the number of coils involved. This should include enough slot wedges, slot fillers, and wedges for commutator risers for an extra 1½ throw of coils. If partial sets of Classes 2, 3, or 4 winding supplies are ordered, a complete set of cut banding insulation and banding clips should be included because these are needed to finish the job regardless of the number of coils to be replaced.

Authorized Engineering Information 9-17-1981.

5.4 INFORMATION NEEDED ON ORDERS

Class of winding supplies desired should be stated clearly.

Copyright National Electrical Manufacturers Association
Provided by IHS under license with NEMA
No reproduction or networking permitted without license from IHS

Not for Resale

Complete nameplate reading of the machine to be repaired should always be given.

Since coils, temperature indicating coils, equalizers, and supporting rings are not included in any of the classes of winding supplies, they should be specified separately.

Authorized Engineering Information 9-17-1981.

5.5 GLOSSARY

Some of the terms used in 4.1 through 4.3 are defined as follows:

Cement—Filling compound.

Coil lead connectors—Sleeve connectors, figure 8 connectors or clips.

Coil support insulation for both front and rear—Flange insulation or shelf insulation.

Equalizer—Equalizer coil, cross connector, cross connector coil.

Equalizer assembly insulation—Cross connector assembly insulation.

Insulation strip between coil layers—Used to give support between top and bottom layers of coils, outside of slot.

Slot cell—Slot trough or feed paper.

Slot filler—Middle stick or bottom stick.

Slot U piece—Insulation used at end of slot to provide additional creepage distance and cushion for coil.

Slot wedge—Top stick, bridge.

Supporting ring—Bracing ring, tie ring, bracing arm, supporting arm.

Authorized Engineering Information 9-17-1981.

Copyright National Electrical Manufacturers Association
Provided by IHS under license with NEMA
No reproduction or networking permitted without license from IHS
Not for Resale

Section 6
GUIDES OF RECOMMENDED RENEWAL PARTS FOR MAINTAINING CONTINUOUS OPERATION OF MOTORS AND GENERATORS

6.1 INTRODUCTION

Guides 1 through 4 are intended for users of motors and generators who may not keep complete stocks of renewal parts and for those who desire to obtain a minimum quantity of parts when buying new equipment. It is desirable to forecast requirements as accurately as possible in order to assure that the necessary parts or material may be available when needed to keep equipment in efficient operating condition.

The recommendations are the result of experience over long periods of time with maintenance of continuous operation of machines. It is recognized that operating conditions vary, and the recommendations may require modification accordingly. Under especially severe operating conditions, additional stock quantities may be desirable.

The importance of minimizing shut-downs due to breakdowns, together with the distance from the source of supply and transportation facilities, and severity of service, such as damp or acid atmospheres, overloads, frequent starting, and so forth, should be taken into consideration by users. It is believed that the Guides will assist in maintaining continuous operation with a minimum of interruption.

Authorized Engineering Information 9-17-1981.

6.2 GUIDE NO. 1 FOR DIRECT-CURRENT MOTORS AND GENERATORS

Recommended Renewal Parts for Maintaining Continuous Operation

(In addition to auxiliary items such as tachometers, brakes, plugging switches, zero speed switches, temperature relays, and so forth.)

Item	Description of Part	Recommended Minimum Stock Number of Units in Operation			
		1 to 4	5 to 9	10 to 20*	10 to 20
1	Complete motor	0	0	0	1
2	Armature†	0	1	1	0
3	Armature coils with winding supplies	1 Set‡	1 Set	1 Set	1 Set
4	Main field coil	1	1 Set	1 Set	1 Set
5	Shunt field coil (may only be available as a "wound on the pole" construction	1	1 Set	1 Set	1 Set
6	Series field coil	1	1 Set	1 Set	1 Set
7	Commutating field coil	1	1 Set	1 Set	1 Set
8	Brushholder	1	1	4	2
9	Brushholder springs	2	4	8	2
10	Brushholder stud insulation‡	1 Set	2 Sets	2 Sets	1 Set
11	Brushes	1 Set	2 Sets	4 Sets	4 Sets
12	Bearings	1 Set	2 Sets	2 Sets	1 Set
13	Oil rings (where used)	1 Set	1 Set	2 Sets	1 Set

* This column to be used when complete motor is not stocked.

† Some manufacturers may recommend that "armature" for split-frame motors includes frame heads and bearings.

‡ One set—sufficient insulation for one stud. In some cases this item will cover an insulating yoke.

Authorized Engineering Information 9-17-1981.

Copyright National Electrical Manufacturers Association
Provided by IHS under license with NEMA
No reproduction or networking permitted without license from IHS
Not for Resale

6.3 GUIDE NO. 2 FOR ALTERNATING-CURRENT SQUIRREL-CAGE MOTORS

Recommended Renewal Parts for Maintaining Continuous Operation

Item	Description of Part	Recommended Minimum Stock Number of Units in Operation			
		1 to 4	5 to 9	10 to 20*	10 to 20
1	Motor complete	0	0	0	1
2	Stator coils (with winding supplies)	1 Set	1 Set	2 Sets	1 Set
3	Bearings	1 Set	2 Sets	2 Sets	1 Set
4	Oil rings (where used)	1 Set	1 Set	2 Sets	1 Set
5	Retainer rings (antifriction bearings)	1 Set	1 Set	2 Sets	1 Set

* This column to be used when complete motor is not stocked.

Authorized Engineering Information 9-17-1981.

6.4 GUIDE NO. 3 FOR ALTERNATING-CURRENT WOUND-ROTOR MOTORS

Recommended Renewal Parts for Maintaining Continuous Operation

Item	Description of Part	Recommended Minimum Stock Number of Units in Operation			
		1 to 4	5 to 9	10 to 20*	10 to 20
1	Motor complete	0	0	0	1
2	Wound rotor complete	0	1	1	0
3	Rotor coils with winding supplies	1 Set†	1 Set	2 Sets	1 Set
4	Stator coils with winding supplies	1 Set	1 Set	2 Sets	1 Set
5	Brushholders	1	2	4	1
6	Brushholder springs	2	4	8	2
7	Brushholder stud insulation†	1 Set	2 Sets	2 Sets	1 Set
8	Brushes	1 Set	2 Sets	4 Sets	4 Sets
9	Bearings	1 Set	2 Sets	2 Sets	1 Set
10	Oil rings (when used)	1 Set	1 Set	2 Sets	1 Set
11	Retainer rings (antifriction bearings)	1 Set	2 Sets	2 Sets	1 Set

* This column to be used when complete motor is not stocked.

† One set—sufficient insulation for one stud.

Authorized Engineering Information 9-17-1981.

6.5 GUIDE NO. 5 FOR SYNCHRONOUS MOTORS AND GENERATORS

Recommended Renewal Parts for Maintaining Continuous Operation

Item	Description of Part	Recommended Minimum Stock Number of Units in Operation			
		1 to 4	5 to 9	10 to 20*	10 to 20
1	Motor complete	0	0	0	1
2	Rotor complete	0	0	1	0
3	Stator coils with winding supplies	⅓ Set	1 Set‡	2 Sets	1 Set
4	Rotor field coil† (may only be available as a "wound on the pole" construction	2	1 Set	2 Sets	1 Set
5	Brushholders	1	2	4	1
6	Brushholder springs	2	4	8	2
7	Brushholder stud insulation‡	1 Set	2 Sets	2 Sets	1 Set
8	Brush	1 Set	2 Sets	4 Sets	4 Sets
9	Bearings	1 Set	2 Sets	2 Sets	1 Set
10	Oil rings (when used)	1 Set	1 Set	2 Sets	1 Set
11	Retainer rings (antifriction bearings)	1 Set	2 Sets	2 Sets	1 Set

* This column to be used when complete motor is not stocked.

† The recommended quantity for each kind of coil used—closed, open or universal.

‡ One set—sufficient insulation for one stud.

Authorized Engineering Information 9-17-1981.

Copyright National Electrical Manufacturers Association
Provided by IHS under license with NEMA
No reproduction or networking permitted without license from IHS
Not for Resale

Section 7
PRESERVATION OF RENEWAL PARTS FOR ELECTRICAL ROTATING APPARATUS

7.1 PURPOSE

Manufacturers customarily package renewal parts to ensure safe delivery and to maintain the original condition of parts for a reasonable period. There are cases, however, where storage beyond such a period is necessary.

The information contained in this Section defines methods of preservation packaging of all renewal parts for electrical rotating apparatus for periods beyond that provided by the normal commercial packaging.

When preservation packaging is needed, it should be specifically requested.

Authorized Engineering Information 9-17-1981.

7.2 STORAGE CONDITIONS

The user should provide storage conditions which are reasonably clean, cool and dry. When extraordinary conditions (such as continued high temperature and/or high humidity, rapid temperature changes, smoke, exhaust and chemical gases, salt air, and vibration) are known to exist, the manufacturer should be notified of the existing conditions at the time of purchase so steps can be taken to assure proper preservation.

Authorized Engineering Information 9-17-1981.

7.3 FERROUS AND NONFERROUS PARTS

After machined surfaces on ferrous parts are cleaned of foreign matter, a protective coating should be applied or other preservative means used. Critical surfaces, such as bearing fits, taper fits, journal surfaces on shafts, and bores on oil slingers should not be fingered after cleaning.

Nonferrous parts and those made from stainless steel do not require preservation treatment. This also applies to parts which have plated or tinned surfaces, or surfaces coated with noncorrosive film, varnish, or paint.

When ferrous parts are assembled with nonferrous parts, such as armatures, brushholders, and so forth, care should be taken that the ferrous parts are suitably protected.

Parts which have been coated with a grease-like compound may require overwrapping with a suitable greaseproof material.

Authorized Engineering Information 9-17-1981.

7.4 COPPER OR BRASS PARTS

Copper or brass parts which will later become soldered joints, such as milled commutator risers and terminal lugs, can be protected by a coating of resin flux, tin, lead, an alloy of tin and lead, silver solder, or other suitable protective materials.

Authorized Engineering Information 9-17-1981.

7.5 PARTS WITH ELECTRICAL INSULATION

Parts with electrical insulation, such as coils, should be kept clean and dry before packaging. To provide dimensional stability of windings, it may be necessary to apply mechanical reinforcement.

Authorized Engineering Information 9-17-1981.

7.6 BARRIERS

Water vapor and oxygen are the principal causes of corrosion of ferrous parts and aging of insulating materials; it is, therefore, recommended that a barrier be provided. Dip coatings, sealed wraps and sealed containers can be used for this purpose. The air in the package should be kept to a minimum. Desiccants can be incorporated in the package to absorb entrapped moisture or moisture which may pass the barrier, or corrosion inhibitors may be used.

Authorized Engineering Information 9-17-1981.

7.7 PACKING

Renewal parts should be given proper unit protection and packed securely. Any cushioning material utilized should be of non-water-absorbing type.

For ready identification packages, cases, etc., should be identified on the outside as to the manufacturer's catalog number, the quantity, and other pertinent information.

Each package should be clearly marked:

"PRESERVATION PACKAGED. DO NOT OPEN UNTIL READY TO USE."

Authorized Engineering Information 9-17-1981.

Copyright National Electrical Manufacturers Association
Provided by IHS under license with NEMA
No reproduction or networking permitted without license from IHS
Not for Resale

Section 8
RENEWAL PARTS BULLETINS

8.1 PURPOSE

The purpose of Renewal Parts Bulletins is to improve renewal parts listings of the manufacturers in order to save time and effort of users in identifying parts for motors and generators.

Authorized Engineering Information 9-17-1981.

8.2 RENEWAL PARTS BULLETIN

Renewal Parts Bulletins should be in accordance with the following:

A. Name

Information for identifying renewal parts for any specific type of apparatus should be designated as a "Renewal Parts Bulletin," plus any additional nomenclature which the manufacturer may desire.

B. Size

The size of all Renewal Parts Bulletins will nominally be 8½ × 11 inches, with provision for binding on the long side.

C. Format

The first page of each Renewal Parts Bulletin should include a format, containing the following information:

1. Name of manufacturer;
2. Model or type number of apparatus;
3. Serial number (if any);
4. Renewal Parts Bulletin number;
5. Date of issue;
6. "Supersedes issue dated _____ ."

D. Nomenclature

The nomenclature should be consistent with Section 1, Definitions.

E. Contents

The following specific information should be included as part of the contents.

1. Reference number (referring to illustration);
2. Identification number (Part No., Catalog No., Piece No., or Style No.);
3. Quantity required per unit;
4. Description of part (use definition given in Publication);
5. Where feasible, suitable illustrations for use in identifying parts listed.

Authorized Engineering Information 9-17-1981.

Copyright National Electrical Manufacturers Association
Provided by IHS under license with NEMA
No reproduction or networking permitted without license from IHS
Not for Resale

NEMA STANDARDIZATION

The purpose of NEMA Standards, their classification and status, are set forth in certain clauses of the NEMA *Standardization Policies and Procedures* manual and are referenced below.

Purpose of Standards

National Electrical Manufacturers Association Standards are adopted in the public interest and are designed to eliminate misunderstandings between the manufacturer and the purchaser and to assist the purchaser in selecting and obtaining the proper product for its particular need. Existence of a National Electrical Manufacturers Association Standard does not in any respect preclude any member or nonmember from manufacturing or selling products not conforming to the standard. *(Standardization Policies and Procedures, p. 1)*

Definition of a Standard

A standard of the National Electrical Manufacturers Association defines a product, process, or procedure with reference to one or more of the following: nomenclature, composition, construction, dimensions, tolerances, safety, operating characteristics, performance, rating, testing, and the service for which they are designed.

(Standardization Policies and Procedures, p. 2)

Dimensions

Where dimensions are given for interchangeability purposes, alternate dimensions satisfying the other provisions of the standards publication may be capable of otherwise equivalent performance.

(Standardization Policies and Procedures, p. 9)

Classes of Standards

National Electrical Manufacturers Association Standards are of two classes:

1. NEMA Standard, which relates to a product commercially standardized and subject to repetitive manufacture, which standard has been approved by at least 90 percent of the members of the Subdivision eligible to vote thereon;
2. Suggested Standard for Future Design, which may not have been regularly applied to a commercial product, but which suggests a sound engineering approach to future development, which standard has been approved by at least two-thirds of the members of the Subdivision eligible to vote thereon.

(Standardization Policies and Procedures, pp. 8 & 17)

Authorized Engineering Information

Authorized Engineering Information consists of explanatory data and other engineering information of an informative character not falling within the classification of NEMA Standard or Suggested Standard for Future Design, which standard has been approved by at least two-thirds of the members of the Subdivision eligible to vote on the standard.

(Standardization Policies and Procedures, pp. 8 & 17)

Official Standards Proposal

An Official Standards Proposal is an official draft of a proposed standard which is formally recommended to an outside organization(s) for consideration, comment, and/or approval, and which has been approved by at least 90 percent of the members of the Subdivision eligible to vote thereon.

(Standardization Policies and Procedures, pp. 8 & 17)

Identification of Status

Standards in NEMA Standards Publications are identified in the foreword or following each standard as "NEMA Standard" or "Suggested Standard for Future Design." These indicate the status of the standard. These words are followed by a date which indicates when the standard was adopted in its present form by the Association.

The material identified as "Authorized Engineering Information" and "Official Standards Proposal" is designated similarly.

Copyright National Electrical Manufacturers Association
Provided by IHS under license with NEMA
No reproduction or networking permitted without license from IHS
Not for Resale

RENEWAL PARTS SECTION
OF THE
NATIONAL ELECTRICAL MANUFACTURERS ASSOCIATION

MEMBER COMPANIES

Abex—Chandeysson Division
Railroad Products Group
St. Louis, MO 63116

Eureka Electrical Products, Inc.
North East, PA 16428

The Imperial Electric Company
Akron, OH 44309

Kirkwood Industries, Inc.
Cleveland, OH 44135

Leeson Electric Corporation
Grafton, WI 53024

National Electric Coil
Columbus, OH 43221

Reliance Electric Company
Cleveland, OH 44117

Southern Electric Company
Sub Whittaker Electric Company
Hammond, IN 46320

Stimple and Ward Company
Pittsburgh, PA 15237

Tec Tran Corporation
Mahwah, NJ 07430

Westinghouse Electric Corporation
Pittsburgh, PA 15220

Copyright National Electrical Manufacturers Association
Provided by IHS under license with NEMA
No reproduction or networking permitted without license from IHS
Not for Resale