RE 2-87 6470247 0003586 6
H-11-18

NEMA STANDARDS PUBLICATION NO. RE 2

nema

Electrical Insulating Varnish

NEMA

Copyright National Electrical Manufacturers Association
Provided by IHS under license with NEMA
No reproduction or networking permitted without license from IHS
Not for Resale

NATIONAL ELECTRICAL MANUFACTURERS ASSOCIATION 2101 L STREET, N.W., WASHINGTON, D.C. 20037

NEMA Standards Publication No. RE 2-1987 (R1993)

INSULATING VARNISHES

Reaffirmed with No Text Changes, December 1993

Published by:

National Electrical Manufacturers Association
2101 L Street, N.W., Suite 300
Washington, D.C. 20037

©1994 National Electrical Manufacturers Association

--`,,`,`,-`-`,,`,,`,`,,`---

Copyright National Electrical Manufacturers Association
Provided by IHS under license with NEMA
No reproduction or networking permitted without license from IHS

Not for Resale

FOREWORD

This Standards Publication is intended to assist those responsible for the design of new and the repair of existing electrical equipment. This Standards Publication was developed by the Electrical Insulating Resins Section of the National Electrical Manufacturers Association. In the preparation of this Standards Publication input of users and other interested parties has been sought and evaluated. Inquiries, comments, and proposed or recommended revisions should be submitted to the concerned NEMA product subdivision by contacting the:

Manager, Engineering Department
National Electrical Manufacturers Association
2101 L Street, N.W.
Washington, D.C. 20037

Copyright National Electrical Manufacturers Association
Provided by IHS under license with NEMA
No reproduction or networking permitted without license from IHS
Not for Resale

SCOPE

This Standards Publication is intended to present in concise and convenient form all standards for electrical insulating varnishes.

This Standards Publication includes definitions, constructions, and methods for determining the mechanical, thermal, and electrical performance characteristics of electrical insulating varnishes.

Copyright National Electrical Manufacturers Association
Provided by IHS under license with NEMA
No reproduction or networking permitted without license from IHS
Not for Resale

ELECTRICAL INSULATING VARNISH

Section 1

REFERENCED STANDARDS AND DEFINITIONS

1.1 REFERENCED STANDARDS

The following publications are adopted, in whole or in part as indicated, by reference in this Standards Publication:

American Society for Testing and Materials
1916 Race Street
Philadelphia, PA 19103

ASTM D 56-82	*Test Method for Flash Point by Tag Closed Tester*
ASTM D 93-80	*Test Methods for Flash Point by Pensky-Martens Closed Tester*
ASTM D 115-82	*Methods of Testing Varnishes Used for Electrical Insulation*
ASTM D 2307-86	*Test Method for Thermal Endurance of Film Insulated Round Magnet Wire*
ASTM D 2519-83	*Test Method for Bond Strength of Electrical Insulating Varnishes by the Helical Coil Test*
ASTM D 3278-82	*Test Method for Flash Point of Liquids by Setaflash Closed-Cup Apparatus*
ASTM D 3312-85	*Test Method for Percent Reactive Monomer in Solventless Varnishes*

International Electrotechnical Commission
1, rue de Varembe
Geneva, Switzerland

IEC Publication 216-1(1986) *Guide for the Determination of Thermal Endurance Properties of Electrical Insulating Materials*

Institute of Electrical and Electronics Engineers
345 East 47th Street
New York, NY 10017

ANSI/IEEE 4-1978 *Techniques for High-Voltage Testing*

National Electrical Manufacturers Association
2101 L Street, N.W.
Washington, D.C. 20037

MW 1000-1987 *Magnet Wire*

Copyright National Electrical Manufacturers Association
Provided by IHS under license with NEMA
No reproduction or networking permitted without license from IHS
Not for Resale

1.2 DEFINITIONS

1.2.1 Cure Time

The time required at a predetermined temperature to complete the technical conversion of a liquid varnish to a solid cross-linked polymer.

1.2.2 Dielectric Breakdown Voltage

The minimum voltage which will produce a rupture in an insulation.

1.2.3 Dielectric Strength

The breakdown voltage divided by the thickness of the varnish.

1.2.4 Dissipation Factor

The ratio of the dielectric loss to its relative permittivity. The dissipation factor of a finished unit is dependent on the total insulation system.

1.2.5 Gel

A gel is a semi-solid or jelly-like condition of a material.

1.2.6 Gel Time

The time required for a varnish to be transformed from a liquid state to a gel.

1.2.7 Monomer Content (Reactive Diluent)

That portion of a varnish which copolymerizes with the resinous component during cure.

1.2.8 Non-Volatile Matter

That portion of varnish that is not volatilized under specified conditions of heating.

1.2.9 Permittivity (Dielectric Constant)

That property of a varnish which determines the electrostatic energy stored per unit volume per unit potential gradient. It is the ratio of the capacitance of a given configuration of electrodes, with the varnish as the dielectric, to the capacitance of the same configuration of electrodes, with vacuum as the dielectric.

1.2.10 Pot Life

The time span during which a varnish will continue to be useable under specified processing conditions.

1.2.11 Power Factor

The number of watts (active power) indicated by a wattmeter in an alternating current circuit divided by the volt-amperes (apparent power) as measured by a volt-ampere meter.

1.2.12 Shelf Life

The time span during which a varnish will continue to be useable under specified storage conditions.

1.2.13 Temperature Index

The number corresponding to the temperature in degrees C derived from the thermal endurance relationship at a given time, normally 20,000 hours.

1.2.14 Thermal Class

The grouping of Temperature Index values into the following specific categories:

Thermal Class	Temperature Index Range
105 (A)	105 and up to but less than 130 °C
130 (B)	130 and up to but less than 155 °C
155 (F)	155 and up to but less than 180 °C
180 (H)	180 and up to but less than 200 °C
200 (N)	200 and up to but less than 220 °C
220 ( )	220 °C and above

1.2.15 Thixotropic Index

A measure of the thixotropy of a material expressed as the ratio of viscosities measured at two different rates.

1.2.16 Thixotropy

Describes materials that are gel-like at rest, but fluid when sheared.

1.2.17 Varnish Mix Compatibility

The mixing of two or more varnishes without resulting in curdling, precipitation, or separation.

1.2.18 Viscosity

The property of resistance to flow or shear.

Copyright National Electrical Manufacturers Association
Provided by IHS under license with NEMA
No reproduction or networking permitted without license from IHS
Not for Resale

Section 2
GENERAL

2.1 GENERAL INFORMATION

This Standards Publication gives thermal classes of electrical insulating varnishes when used in conjunction with magnet wire, glass cloth, or other substrates.

NEMA Standard 5-27-1987.

2.1.1 Nomenclature

The nomenclature shall be EV XXX/YY where EV indicates electrical insulating varnish and XXX indicates thermal classification and YY indicates substrate.

NEMA Standard 5-27-1987.

The following are examples of nomenclature:

EV 180/35—Describes an electrical insulating varnish which has thermal classification of 180 when applied over MW 35 as described in NEMA Standards Publication MW 1000.

EV 180/GC—Describes an electrical insulating varnish which has a thermal classification of 180 when applied over glass cloth.

Authorized Engineering Information 5-27-1987.

2.1.2 Materials

This Standards Publication covers solvent and solventless electrical insulation varnishes where:

1. "Solvent varnish" describes a resin dissolved in a volatile nonreactive liquid component.
2. "Solventless varnish" describes a resin in a reactive liquid component.
3. "Magnet Wire" is as described by NEMA Standards Publication MW 1000.
4. "Other Substrates" include fibrous and non-fibrous material used in electrical applications.

NEMA Standard 5-27-1987.

2.1.3 Performance Characteristics

The performance characteristics of a proven electrical insulation system may vary depending upon the source of the specific components. Therefore, the user of this Standards Publication should verify the performance of the candidate component(s) in the system before use.

Authorized Engineering Information 5-27-1987.

2.2 SAFETY PRECAUTIONS

This Standards Publication may include discussion of the use of hazardous materials, operations and equipment. It is the responsibility of whoever uses this Standards Publication to establish appropriate safety practices and to determine the applicability of regulatory limitations prior to use. Varnish should not be used at temperatures above the flash point when inadequate ventilation and the possibility of flames or sparks exist. Varnish should be stored in sealed containers. Precautions should also apply to the handling of reagents and solvents called for herein.

Anytime a heated or boiling solvent is used for test purposes, a hazard exists. The recommended procedure is to control the solvent by fitting the solvent containing vessel with a reflux condensor.

Authorized Engineering Information 5-27-1987.

Copyright National Electrical Manufacturers Association
Provided by IHS under license with NEMA
No reproduction or networking permitted without license from IHS
Not for Resale

Section 3
VARNISH ADJUSTMENT PROCEDURE

3.1 GENERAL

This varnish adjustment procedure is intended to ensure uniform film build for testing of solvent type varnishes.

Authorized Engineering Information 5-27-1987.

3.2 PREPARATION OF TEST SPECIMENS

3.2.1 Solvent Varnish

Copper strips having the dimensions of 1.5 inches in width, 8 inches in length, and 0.005+ or− 0.0003 inches in thickness shall be cleaned with a suitable solvent such as acetone. These are polished thoroughly with No. 000 steel wool and wiped free of any fingerprints or metal particles with a solvent such as acetone and a dust free cloth.

The varnish to be tested shall be adjusted so that two coats, by reverse dipping at a withdrawal rate of 4 inches per minute, give a cured film thickness per side of 0.0018 to 0.0022 inches. The varnish is cured after each dip in a forced air oven at a time and temperature specified by the manufacturer.

NEMA Standard 5-27-1987.

3.2.2 Solventless Varnishes (Filled or Unfilled)

Solventless varnishes shall not be adjusted. They shall be processed in accordance with manufacturer's instructions.

NEMA Standard 5-27-1987.

Copyright National Electrical Manufacturers Association
Provided by IHS under license with NEMA
No reproduction or networking permitted without license from IHS

Not for Resale

Section 4
PRODUCT PROPERTIES

4.1 REQUIRED PRODUCT PROPERTIES

The product properties shall be as described by their type, product description, general requirements, and dielectric breakdown voltage as shown in the product properties specification sheet of this Section.

NEMA Standard 5-27-1987.

4.2 ADDITIONAL PROPERTIES

Additional properties may also be specified as shown in the product property specification sheets of this Section.

Authorized Engineering Information 5-27-1987

Copyright National Electrical Manufacturers Association
Provided by IHS under license with NEMA
No reproduction or networking permitted without license from IHS

Not for Resale

TYPE: EV 105/2

PRODUCT DESCRIPTION: An electrical insulating varnish which has a thermal class of 105 when tested over MW 2 magnet wire shall meet the general requirements listed below.

GENERAL REQUIREMENTS: Thermal Aging Test

Electrical:
Twisted Pair—Min 105 °C

Mechanical:
Helical Coil—Min 105 °C
or Twisted Coil—Min 105 °C

DIELECTRIC BREAKDOWN VOLTAGE

AWG SIZE	DIELECTRIC STRENGTH MIN BREAKDOWN VOLTAGE	AWG SIZE	DIELECTRIC STRENGTH MIN BREAKDOWN VOLTAGE
25	3675	35	1855
26	3570	36	1680
27	3500	37	1505
28	3395	38	1330
29	3325	39	1190
30	3220	40	1085
31	2905	41	980
32	2590	42	875
33	2345	43	770
34	2100	44	700

NEMA Standard 5-27-1987.

ADDITIONAL PROPERTIES WHICH MAY BE SPECIFIED

SOLVENTLESS VARNISHES

Bond Strength
Chemical Resistance
Dielectric Strength
Flash Point
Refrigerant Resistance/Extractibles
Gel Time
Mix Compatibility
Percent Monomer (Reactive Diluent)
Permittivity (Dielectric Constant) and Dissipation Factor
Specific Gravity
Thixotropic Index
Viscosity

SOLVENT VARNISHES

Bond Strength
Chemical Resistance
Dielectric Strength
Flash Point
Refrigerant Resistance/Extractibles
Mix Compatibility
Non-Volatile Matter
Permittivity (Dielectric Constant) and Dissipation Factor
Specific Gravity
Viscosity

The performance characteristics of a proven electrical insulation system may vary depending upon the source of the specific components. Therefore, the user of this standard should verify the performance of the candidate component(s) before use.

Authorized Engineering Information 5-27-1987.

Copyright National Electrical Manufacturers Association
Provided by IHS under license with NEMA
No reproduction or networking permitted without license from IHS
Not for Resale

TYPE: EV 105/75

PRODUCT DESCRIPTION: An electrical insulating varnish which has a thermal class of 105 when tested over MW 75 magnet wire shall meet the general requirements listed below.

GENERAL REQUIREMENTS: Thermal Aging Test

Electrical:
Twisted Pair—Min 105 °C

Mechanical:
Helical Coil—Min 150 °C
or Twisted Coil—Min 105 °C

DIELECTRIC BREAKDOWN VOLTAGE

AWG SIZE	DIELECTRIC STRENGTH MIN BREAKDOWN VOLTAGE	AWG SIZE	DIELECTRIC STRENGTH MIN BREAKDOWN VOLTAGE
25	3675	35	1855
26	3570	36	1680
27	3500	37	1505
28	3395	38	1330
29	3325	39	1190
30	3220	40	1085
31	2905	41	980
32	2590	42	875
33	2345	43	770
34	2100	44	700

NEMA Standard 5-27-1987.

ADDITIONAL PROPERTIES WHICH MAY BE SPECIFIED

SOLVENTLESS VARNISHES

Chemical Resistance
Dielectric Strength
Flash Point
Refrigerant Resistance/Extractibles
Gel Time
Mix Compatibility
Percent Monomer (Reactive Diluent)
Permittivity (Dielectric Constant) and Dissipation Factor
Specific Gravity
Thixotropic Index
Viscosity

SOLVENT VARNISHES

Chemical Resistance
Dielectric Strength
Flash Point
Refrigerant Resistance/Extractibles
Mix Compatibility
Non-Volatile Matter
Permittivity (Dielectric Constant) and Dissipation Factor
Specific Gravity
Viscosity

The performance characteristics of a proven electrical insulation system may vary depending upon the source of the specific components. Therefore, the user of this standard should verify the performance of the candidate component(s) before use.

Authorized Engineering Information 5-27-1987.

Copyright National Electrical Manufacturers Association
Provided by IHS under license with NEMA
No reproduction or networking permitted without license from IHS
Not for Resale

TYPE: EV 130/2

PRODUCT DESCRIPTION: An electrical insulating varnish which has a thermal class of 130 when tested over MW 2 magnet wire shall meet the general requirements listed below.

GENERAL REQUIREMENTS: Thermal Aging Test

Electrical:
Twisted Pair—Min 130°C

Mechanical:
Helical Coil—Min 130°C
or Twisted Coil—Min 130°C

DIELECTRIC BREAKDOWN VOLTAGE

AWG SIZE	DIELECTRIC STRENGTH MIN BREAKDOWN VOLTAGE	AWG SIZE	DIELECTRIC STRENGTH MIN BREAKDOWN VOLTAGE
25	3675	35	1855
26	3570	36	1680
27	3500	37	1505
28	3395	38	1330
29	3325	39	1190
30	3220	40	1085
31	2905	41	980
32	2590	42	875
33	2345	43	770
34	2100	44	700

NEMA Standard 5-27-1987.

ADDITIONAL PROPERTIES WHICH MAY BE SPECIFIED

SOLVENTLESS VARNISHES

Chemical Resistance
Dielectric Strength
Flash Point
Refrigerant Resistance/Extractibles
Gel Time
Mix Compatibility
Percent Monomer (Reactive Diluent)
Permittivity (Dielectric Constant) and DissipationFactor
Specific Gravity
Thixotropic Index
Viscosity

SOLVENT VARNISHES

Chemical Resistance
Dielectric Strength
Flash Point
Refrigerant Resistance/Extractibles
Mix Compatibility
Non-Volatile Matter
Permittivity (Dielectric Constant) and Dissipation Factor
Specific Gravity
Viscosity

The performance characteristics of a proven electrical insulationsystem may vary depending upon the source of the specific components. Therefore, the user of this standard should verify the performance of the candidate component(s) before use.

Authorized Engineering Information 5-27-1987.

Copyright National Electrical Manufacturers Association
Provided by IHS under license with NEMA
No reproduction or networking permitted without license from IHS
Not for Resale

TYPE: EV 130/5

PRODUCT DESCRIPTION: An electrical insulating varnish which has a thermal class of 130 when tested over MW 5 magnet wire shall meet the general requirements listed below.

GENERAL REQUIREMENTS: Thermal Aging Test

Electrical:
Twisted Pair—Min 130°C

Mechanical:
Helical Coil—Min 130°C
or Twisted Coil—Min 130°C

DIELECTRIC BREAKDOWN VOLTAGE

AWG SIZE	DIELECTRIC STRENGTH MIN BREAKDOWN VOLTAGE	AWG SIZE	DIELECTRIC STRENGTH MIN BREAKDOWN VOLTAGE
14	4975	30	3220
15	4795	31	2905
16	4655	32	2590
17	4550	33	2345
18	4445	34	2100
19	4305	35	1885
20	4200	36	1680
21	4095	37	1505
22	3990	38	1330
23	3885	39	1190
24	3780	40	1085
25	3675	41	980
26	3570	42	875
27	3500	43	770
28	3395	44	700
29	3325		

NEMA Standard 5-27-1987.

ADDITIONAL PROPERTIES WHICH MAY BE SPECIFIED

Chemical Resistance
Dielectric Strength
Flash Point
Refrigerant Resistance/Extractibles
Gel Time
Mix Compatibility
Percent Monomer (Reactive Diluent)
Permittivity (Dielectric Constant) and Dissipation Factor
Specific Gravity
Thixotropic Index
Viscosity

Chemical Resistance
Dielectric Strength
Flash Point
Refrigerant Resistance/Extractibles
Mix Compatibility
Non-Volatile Matter
Permittivity (Dielectric Constant) and Dissipation Factor
Specific Gravity
Viscosity

The performance characteristics of a proven electrical insulation system may vary depending upon the source of the specific components. Therefore, the user of this standard should verify the performance of the candidate component(s) before use.

Copyright National Electrical Manufacturers Association
Provided by IHS under license with NEMA
No reproduction or networking permitted without license from IHS
Not for Resale

TYPE: EV 130/24

PRODUCT DESCRIPTION: An electrical insulating varnish which has a thermal class of 130 when tested over MW 24 magnet wire shall meet the general requirements listed below.

GENERAL REQUIREMENTS: Thermal Aging Test

Electrical:
Twisted Pair—Min 130°C

Mechanical:
Helical Coil—Min 130°C
or Twisted Coil—Min 130°C

DIELECTRIC BREAKDOWN VOLTAGE

AWG SIZE	DIELECTRIC STRENGTH MIN BREAKDOWN VOLTAGE	AWG SIZE	DIELECTRIC STRENGTH MIN BREAKDOWN VOLTAGE
14	4445	23	3500
15	4305	24	3395
16	4200	25	3325
17	4095	26	3220
18	3990	27	3150
19	3885	28	3045
20	3780	29	3010
21	3675	30	2905
22	3605		

NEMA Standard 5-27-1987.

ADDITIONAL PROPERTIES WHICH MAY BE SPECIFIED

SOLVENTLESS VARNISHES

Chemical Resistance
Dielectric Strength
Flash Point
Refrigerant Resistance/Extractibles
Gel Time
Mix Compatibility
Percent Monomer (Reactive Diluent)
Permittivity (Dielectric Constant) and Dissipation Factor
Specific Gravity
Thixotropic Index
Viscosity

SOLVENT VARNISHES

Chemical Resistance
Dielectric Strength
Flash Point
Refrigerant Resistance/Extractibles
Mix Compatibility
Non-Volatile Matter
Permittivity (Dielectric Constant) and Dissipation Factor
Specific Gravity
Viscosity

The performance characteristics of a proven electrical insulation system may vary depending upon the source of the specific components. Therefore, the user of this standard should verify the performance of the candidate component(s) before use.

Authorized Engineering Information 5-27-1987.

Copyright National Electrical Manufacturers Association
Provided by IHS under license with NEMA
No reproduction or networking permitted without license from IHS
Not for Resale

TYPE: EV 130/26

PRODUCT DESCRIPTION: An electrical insulating varnish which has a thermal class of 130 when tested over MW 26 magnet wire shall meet the general requirements listed below.

GENERAL REQUIREMENTS: Thermal Aging Test

Electrical:
Twisted Pair—Min 130°C

Mechanical:
Helical Coil—Min 130°C
or Twisted Coil—Min 130°C

DIELECTRIC BREAKDOWN VOLTAGE

AWG SIZE	DIELECTRIC STRENGTH MIN BREAKDOWN VOLTAGE	AWG SIZE	DIELECTRIC STRENGTH MIN BREAKDOWN VOLTAGE
25	3675	35	1855
26	3570	36	1680
27	3500	37	1505
28	3395	38	1330
29	3325	39	1190
30	3220	40	1085
31	2905	41	980
32	2590	42	875
33	2345	43	770
34	2100	44	700

NEMA Standard 5-27-1987.

ADDITIONAL PROPERTIES WHICH MAY BE SPECIFIED

SOLVENTLESS VARNISHES

Chemical Resistance
Dielectric Strength
Flash Point
Refrigerant Resistance/Extractibles
Gel Time
Mix Compatibility
Percent Monomer (Reactive Diluent)
Permittivity (Dielectric Constant) and Dissipation Factor
Specific Gravity
Thixotropic Index
Viscosity

SOLVENT VARNISHES

Chemical Resistance
Dielectric Strength
Flash Point
Refrigerant Resistance/Extractibles
Mix Compatibility
Non-Volatile Matter
Permittivity (Dielectric Constant) and Dissipation Factor
Specific Gravity
Viscosity

The performance characteristics of a proven electrical insulation system may vary depending upon the source of the specific components. Therefore, the user of this standard should verify the performance of the candidate component(s) before use.

Authorized Engineering Information 5-27-1987.

Copyright National Electrical Manufacturers Association
Provided by IHS under license with NEMA
No reproduction or networking permitted without license from IHS
Not for Resale

TYPE: EV130/28

PRODUCT DESCRIPTION: An electrical insulating varnish which has a thermal class of 130 when tested over MW 28 magnet wire shall meet the general requirements listed below.

GENERAL REQUIREMENTS: Thermal Aging Test

Electrical:
Twisted Pair—Min 130°C

Mechanical:
Helical Coil—Min 130°C
or Twisted Coil—Min 130°C

DIELECTRIC BREAKDOWN VOLTAGE

AWG SIZE	DIELECTRIC STRENGTH MIN BREAKDOWN VOLTAGE	AWG SIZE	DIELECTRIC STRENGTH MIN BREAKDOWN VOLTAGE
14	4445	30	2905
15	4305	31	2635
16	4200	32	2345
17	4095	33	2100
18	3990	34	1890
19	3858	35	1680
20	3780	36	1505
21	3675	37	1365
22	3605	38	1190
23	3500	39	1085
24	3395	40	980
25	3325	41	875
26	3220	42	805
27	3150	43	700
28	3045	44	630
29	3010		

NEMA Standard 5-27-1987.

ADDITIONAL PROPERTIES WHICH MAY BE SPECIFIED

SOLVENTLESS VARNISHES

Chemical Resistance
Dielectric Strength
Flash Point
Refrigerant Resistance/Extractibles
Gel Time
Mix Compatibility
Percent Monomer (Reactive Diluent)
Permittivity (Dielectric Constant) and Dissipation Factor
Specific Gravity
Thixotropic Index
Viscosity

SOLVENT VARNISHES

Chemical Resistance
Dielectric Strength
Flash Point
Refrigerant Resistance/Extractibles
Mix Compatibility
Non-Volatile Matter
Permittivity (Dielectric Constant) and Dissipation Factor
Specific Gravity
Viscosity

The performance characteristics of a proven electrical insulation system may vary depending upon the source of the specific components. Therefore, the user of this standard should verify the performance of the candidate component(s) before use.

Copyright National Electrical Manufacturers Association
Provided by IHS under license with NEMA
No reproduction or networking permitted without license from IHS
Not for Resale

TYPE: EV 130/30

PRODUCT DESCRIPTION: An electrical insulating varnish which has a thermal class of 130 when tested over MW 30 magnet wire shall meet the general requirements listed below.

GENERAL REQUIREMENTS: Thermal Aging Test

Electrical:
Twisted Pair—Min 130°C

Mechanical:
Helical Coil—Min 130°C
or Twisted Coil—Min 130°C

DIELECTRIC BREAKDOWN VOLTAGE

AWG SIZE	DIELECTRIC STRENGTH MIN BREAKDOWN VOLTAGE	AWG SIZE	DIELECTRIC STRENGTH MIN BREAKDOWN VOLTAGE
14	4935	30	3220
15	4795	31	2905
16	4655	32	2590
17	4550	33	2345
18	4445	34	2100
19	4305	35	1855
20	4200	36	1680
21	4095	37	1505
22	3990	38	1330
23	3885	39	1190
24	3780	40	1085
25	3675	41	980
26	3570	42	875
27	3500	43	770
28	3395	44	700
29	3325		

NEMA Standard 5-27-1987.

ADDITIONAL PROPERTIES WHICH MAY BE SPECIFIED

SOLVENTLESS VARNISHES

Chemical Resistance
Dielectric Strength
Flash Point
Refrigerant Resistance/Extractibles
Gel Time
Mix Compatibility
Percent Monomer (Reactive Diluent)
Permittivity (Dielectric Constant) and Dissipation Factor
Specific Gravity
Thixotropic Index
Viscosity

SOLVENT VARNISHES

Chemical Resistance
Dielectric Strength
Flash Point
Refrigerant Resistance/Extractibles
Mix Compatibility
Non-Volatile Matter
Permittivity (Dielectric Constant) and Dissipation Factor
Specific Gravity
Viscosity

The performance characteristics of a proven electrical insulation system may vary depending upon the source of the specific components. Therefore, the user of this standard should verify the performance of the candidate component(s) before use.

Copyright National Electrical Manufacturers Association
Provided by IHS under license with NEMA
No reproduction or networking permitted without license from IHS
Not for Resale

TYPE: EV 130/35

PRODUCT DESCRIPTION: An electrical insulating varnish which has a thermal class of 130 when tested over MW 35 magnet wire shall meet the general requirements listed below.

GENERAL REQUIREMENTS: Thermal Aging Test

Electrical:
Twisted Pair—Min 130°C

Mechanical:
Helical Coil—Min 130°C
or Twisted Coil—Min 130°C

DIELECTRIC BREAKDOWN VOLTAGE

AWG SIZE	DIELECTRIC STRENGTH MIN BREAKDOWN VOLTAGE	AWG SIZE	DIELECTRIC STRENGTH MIN BREAKDOWN VOLTAGE
14	4935	30	3220
15	4795	31	2905
16	4655	32	2590
17	4550	33	2345
18	4445	34	2100
19	4305	35	1855
20	4200	36	1680
21	4095	37	1505
22	3990	38	1330
23	3885	39	1190
24	3780	40	1085
25	3675	41	980
26	3570	42	875
27	3500	43	770
28	3395	44	700
29	3325		

NEMA Standard 5-27-1987.

ADDITIONAL PROPERTIES WHICH MAY BE SPECIFIED

SOLVENTLESS VARNISHES

Chemical Resistance
Dielectric Strength
Flash Point
Refrigerant Resistance/Extractibles
Gel Time
Mix Compatibility
Percent Monomer (Reactive Diluent)
Permittivity (Dielectric Constant) and Dissipation Factor
Specific Gravity
Thixotropic Index
Viscosity

SOLVENT VARNISHES

Chemical Resistance
Dielectric Strength
Flash Point
Refrigerant Resistance/Extractibles
Mix Compatibility
Non-Volatile Matter
Permittivity (Dielectric Constant) and Dissipation Factor
Specific Gravity
Viscosity

The performance characteristics of a proven electrical insulation system may vary depending upon the source of the specific components. Therefore, the user of this standard should verify the performance of the candidate component(s) before use.

Authorized Engineering Information 5-27-1987.

Copyright National Electrical Manufacturers Association
Provided by IHS under license with NEMA
No reproduction or networking permitted without license from IHS
Not for Resale

TYPE: EV 130/73

PRODUCT DESCRIPTION: An electrical insulating varnish which has a thermal class of 130 when tested over MW 73 magnet wire shall meet the general requirements listed below.

GENERAL REQUIREMENTS: Thermal Aging Test

Electrical:
Twisted Pair—Min 130°C

Mechanical:
Helical Coil—Min 130°C
or Twisted Coil—Min 130°C

DIELECTRIC BREAKDOWN VOLTAGE

AWG SIZE	DIELECTRIC STRENGTH MIN BREAKDOWN VOLTAGE	AWG SIZE	DIELECTRIC STRENGTH MIN BREAKDOWN VOLTAGE
14	8850	23	7000
15	8650	24	6790
16	8400	25	6620
17	8190	26	6440
18	7980	27	6300
19	7770	28	6125
20	7560	29	5950
21	7350	30	5800
22	7170		

Refrigerant Resistance/Extractibles	Maximum value shall be agreed to between buyer and seller.

NEMA Standard 5-27-1987.

ADDITIONAL PROPERTIES WHICH MAY BE SPECIFIED

SOLVENTLESS VARNISHES

Chemical Resistance
Dielectric Strength
Flash Point
Gel Time
Mix Compatibility
Percent Monomer (Reactive Diluent)
Permittivity (Dielectric Constant) and Dissipation Factor
Specific Gravity
Thixotropic Index
Viscosity

SOLVENT VARNISHES

Chemical Resistance
Dielectric Strength
Flash Point
Mix Compatibility
Non-Volatile Matter
Permittivity (Dielectric Constant) and Dissipation Factor
Specific Gravity
Viscosity

The performance characteristics of a proven electrical insulation system may vary depending upon the source of the specific components. Therefore, the user of this standard should verify the performance of the candidate component(s) before use.

Authorized Engineering Information 5-27-1987.

Copyright National Electrical Manufacturers Association
Provided by IHS under license with NEMA
No reproduction or networking permitted without license from IHS
Not for Resale

TYPE: EV 130/74

PRODUCT DESCRIPTION: An electrical insulating varnish which has a thermal class of 130 when tested over MW 74 magnet wire shall meet the general requirements listed below.

GENERAL REQUIREMENTS: Thermal Aging Test

Electrical:
Twisted Pair—Min 130°C

Mechanical:
Helical Coil—Min 130°C
or Twisted Coil—Min 130°C

DIELECTRIC BREAKDOWN VOLTAGE

AWG SIZE	DIELECTRIC STRENGTH MIN BREAKDOWN VOLTAGE	AWG SIZE	DIELECTRIC STRENGTH MIN BREAKDOWN VOLTAGE
14	4935	30	3220
15	4795	31	2905
16	4655	32	2590
17	4550	33	2345
18	4445	34	2100
19	4305	35	1855
20	4200	36	1680
21	4095	37	1505
22	3990	38	1330
23	3885	39	1190
24	3780	40	1085
25	3675	41	980
26	3570	42	875
27	3500	43	770
28	3395	44	700
29	3325		

NEMA Standard 5-27-1987.

ADDITIONAL PROPERTIES WHICH MAY BE SPECIFIED

SOLVENTLESS VARNISHES

Chemical Resistance
Dielectric Strength
Flash Point
Refrigerant Resistance/Extractibles
Gel Time
Mix Compatibility
Percent Monomer (Reactive Diluent)
Permittivity (Dielectric Constant) and Dissipation Factor
Specific Gravity
Thixotropic Index
Viscosity

SOLVENT VARNISHES

Chemical Resistance
Dielectric Strength
Flash Point
Refrigerant Resistance/Extractibles
Mix Compatibility
Non-Volatile Matter
Permittivity (Dielectric Constant) and Dissipation Factor
Specific Gravity
Viscosity

The performance characteristics of a proven electrical insulation system may vary depending upon the source of the specific components. Therefore, the user of this standard should verify the performance of the candidate component(s) before use.

Authorized Engineering Information 5-27-1987.

Copyright National Electrical Manufacturers Association
Provided by IHS under license with NEMA
No reproduction or networking permitted without license from IHS
Not for Resale

TYPE: EV 130/75

PRODUCT DESCRIPTION: An electrical insulating varnish which has a thermal class of 130 when tested over MW 75 magnet wire shall meet the general requirements listed below.

GENERAL REQUIREMENTS: Thermal Aging Test

Electrical:
Twisted Pair—Min 130°C

Mechanical:
Helical Coil—Min 130°C
or Twisted Coil—Min 130°C

DIELECTRIC BREAKDOWN VOLTAGE

AWG SIZE	DIELECTRIC STRENGTH MIN BREAKDOWN VOLTAGE	AWG SIZE	DIELECTRIC STRENGTH MIN BREAKDOWN VOLTAGE
25	3675	35	1855
26	3570	36	1680
27	3500	37	1505
28	3395	38	1330
29	3325	39	1190
30	3220	40	1085
31	2905	41	980
32	2590	42	875
33	2345	43	770
34	2100	44	700

NEMA Standard 5-27-1987.

ADDITIONAL PROPERTIES WHICH MAY BE SPECIFIED

SOLVENTLESS VARNISHES

Chemical Resistance
Dielectric Strength
Flash Point
Refrigerant Resistance/Extractibles
Gel Time
Mix Compatibility
Percent Monomer (Reactive Diluent)
Permittivity (Dielectric Constant) and Dissipation Factor
Specific Gravity
Thixotropic Index
Viscosity

SOLVENT VARNISHES

Chemical Resistance
Dielectric Strength
Flash Point
Refrigerant Resistance/Extractibles
Mix Compatibility
Non-Volatile Matter
Permittivity (Dielectric Constant) and Dissipation Factor
Specific Gravity
Viscosity

The performance characteristics of a proven electrical insulation system may vary depending upon the source of the specific components. Therefore, the user of this standard should verify the performance of the candidate component(s) before use.

Authorized Engineering Information 5-27-1987.

Copyright National Electrical Manufacturers Association
Provided by IHS under license with NEMA
No reproduction or networking permitted without license from IHS
Not for Resale

TYPE: EV 155/5

PRODUCT DESCRIPTION: An electrical insulating varnish which has a thermal class of 155 when tested over MW 5 magnet wire shall meet the general requirements listed below.

GENERAL REQUIREMENTS: Thermal Aging Test

Electrical:
Twisted Pair—Min 155 °C

Mechanical:
Helical Coil—Min 155 °C
or Twisted Coil—Min 155 °C

DIELECTRIC BREAKDOWN VOLTAGE

AWG SIZE	DIELECTRIC STRENGTH MIN BREAKDOWN VOLTAGE	AWG SIZE	DIELECTRIC STRENGTH MIN BREAKDOWN VOLTAGE
14	4935	30	3220
15	4795	31	2905
16	4655	32	2590
17	4550	33	2345
18	4445	34	2100
19	4305	35	1855
20	4200	36	1680
21	4095	37	1505
22	3990	38	1330
23	3885	39	1190
24	3780	40	1085
25	3675	41	980
26	3570	42	875
27	3500	43	770
28	3395	44	700
29	3325		

NEMA Standard 5-27-1987.

ADDITIONAL PROPERTIES WHICH MAY BE SPECIFIED

SOLVENTLESS VARNISHES

Chemical Resistance
Dielectric Strength
Flash Point
Refrigerant Resistance/Extractibles
Gel Time
Mix Compatibility
Percent Monomer (Reactive Diluent)
Permittivity (Dielectric Constant) and Dissipation Factor
Specific Gravity
Thixotropic Index
Viscosity

SOLVENT VARNISHES

Chemical Resistance
Dielectric Strength
Flash Point
Refrigerant Resistance/Extractibles
Mix Compatibility
Non-Volatile Matter
Permittivity (Dielectric Constant) and Dissipation Factor
Specific Gravity
Viscosity

The performance characteristics of a proven electrical insulation system may vary depending upon the source of the specific components. Therefore, the user of this standard should verify the performance of the candidate component(s) before use.

Authorized Engineering Information 5-27-1987.

Copyright National Electrical Manufacturers Association
Provided by IHS under license with NEMA
No reproduction or networking permitted without license from IHS
Not for Resale

TYPE: EV 155/16

PRODUCT DESCRIPTION: An electrical insulating varnish which has a thermal class of 155 when tested over MW 16 magnet wire shall meet the general requirements listed below.

GENERAL REQUIREMENTS: Thermal Aging Test

Electrical:
Twisted Pair—Min 155 °C

Mechanical:
Helical Coil—Min 155 °C
or Twisted Coil—Min 155 °C

DIELECTRIC BREAKDOWN VOLTAGE

AWG SIZE	DIELECTRIC STRENGTH MIN BREAKDOWN VOLTAGE	AWG SIZE	DIELECTRIC STRENGTH MIN BREAKDOWN VOLTAGE
14	4935	30	3220
15	4795	31	2905
16	4655	32	2590
17	4550	33	2345
18	4445	34	2100
19	4305	35	1855
20	4200	36	1680
21	4095	37	1505
22	3990	38	1330
23	3885	39	1190
24	3780	40	1085
25	3675	41	980
26	3570	42	875
27	3500	43	770
28	3395	44	700
29	3325		

NEMA Standard 5-27-1987.

ADDITIONAL PROPERTIES WHICH MAY BE SPECIFIED

SOLVENTLESS VARNISHES

Chemical Resistance
Dielectric Strength
Flash Point
Refrigerant Resistance/Extractibles
Gel Time
Mix Compatibility
Percent Monomer (Reactive Diluent)
Permittivity (Dielectric Constant) and Dissipation Factor
Specific Gravity
Thixotropic Index
Viscosity

SOLVENT VARNISHES

Chemical Resistance
Dielectric Strength
Flash Point
Refrigerant Resistance/Extractibles
Mix Compatibility
Non-Volatile Matter
Permittivity (Dielectric Constant) and Dissipation Factor
Specific Gravity
Viscosity

The performance characteristics of a proven electrical insulation system may vary depending upon the source of the specific components. Therefore, the user of this standard should verify the performance of the candidate component(s) before use.

Authorized Engineering Information 5-27-1987.

Copyright National Electrical Manufacturers Association
Provided by IHS under license with NEMA
No reproduction or networking permitted without license from IHS
Not for Resale

TYPE: EV 155/24

PRODUCT DESCRIPTION: An electrical insulating varnish which has a thermal class of 155 when tested over MW 24 magnet wire shall meet the general requirements listed below.

GENERAL REQUIREMENTS: Thermal Aging Test

Electrical:
Twisted Pair—Min 155 °C

Mechanical:
Helical Coil—Min 155 °C
or Twisted Coil—Min 155 °C

DIELECTRIC BREAKDOWN VOLTAGE

AWG SIZE	DIELECTRIC STRENGTH MIN BREAKDOWN VOLTAGE	AWG SIZE	DIELECTRIC STRENGTH MIN BREAKDOWN VOLTAGE
14	4445	23	3500
15	4305	24	3395
16	4200	25	3325
17	4095	26	3220
18	3990	27	3150
19	3885	28	3045
20	3780	29	3010
21	3675	30	2905
22	3605		

NEMA Standard 5-27-1987.

ADDITIONAL PROPERTIES WHICH MAY BE SPECIFIED

SOLVENTLESS VARNISHES

Chemical Resistance
Dielectric Strength
Flash Point
Refrigerant Resistance/Extractibles
Gel Time
Mix Compatibility
Percent Monomer (Reactive Diluent)
Permittivity (Dielectric Constant) and Dissipation Factor
Specific Gravity
Thixotropic Index
Viscosity

SOLVENT VARNISHES

Chemical Resistance
Dielectric Strength
Flash Point
Refrigerant Resistance/Extractibles
Mix Compatibility
Non-Volatile Matter
Permittivity (Dielectric Constant) and Dissipation Factor
Specific Gravity
Viscosity

The performance characteristics of a proven electrical insulation system may vary depending upon the source of the specific components. Therefore, the user of this standard should verify the performance of the candidate component(s) before use.

Authorized Engineering Information 5-27-1987.

Copyright National Electrical Manufacturers Association
Provided by IHS under license with NEMA
No reproduction or networking permitted without license from IHS
Not for Resale

TYPE: EV 155/26

PRODUCT DESCRIPTION: An electrical insulating varnish which has a thermal class of 155 when tested over MW 26 magnet wire shall meet the general requirements listed below.

GENERAL REQUIREMENTS: Thermal Aging Test

Electrical:
Twisted Pair—Min 155 °C

Mechanical:
Helical Coil—Min 155 °C
or Twisted Coil—Min 155 °C

DIELECTRIC BREAKDOWN VOLTAGE

AWG SIZE	DIELECTRIC STRENGTH MIN BREAKDOWN VOLTAGE	AWG SIZE	DIELECTRIC STRENGTH MIN BREAKDOWN VOLTAGE
25	3675	35	1855
26	3570	36	1680
27	3500	37	1505
28	3395	38	1330
29	3325	39	1190
30	3220	40	1085
31	2905	41	980
32	2590	42	875
33	2345	43	770
34	2100	44	700

NEMA Standard 5-27-1987.

ADDITIONAL PROPERTIES WHICH MAY BE SPECIFIED

SOLVENTLESS VARNISHES

Chemical Resistance
Dielectric Strength
Flash Point
Refrigerant Resistance/Extractibles
Gel Time
Mix Compatibility
Percent Monomer (Reactive Diluent)
Permittivity (Dielectric Constant) and Dissipation Factor
Specific Gravity
Thixotropic Index
Viscosity

SOLVENT VARNISHES

Chemical Resistance
Dielectric Strength
Flash Point
Refrigerant Resistance/Extractibles
Mix Compatibility
Non-Volatile Matter
Permittivity (Dielectric Constant) and Dissipation Factor
Specific Gravity
Viscosity

The performance characteristics of a proven electrical insulation system may vary depending upon the source of the specific components. Therefore, the user of this standard should verify the performance of the candidate component(s) before use.

Authorized Engineering Information 5-27-1987.

Copyright National Electrical Manufacturers Association
Provided by IHS under license with NEMA
No reproduction or networking permitted without license from IHS
Not for Resale

TYPE: EV 155/28

PRODUCT DESCRIPTION: An electrical insulating varnish which has a thermal class of 155 when tested over MW 28 magnet wire shall meet the general requirements listed below.

GENERAL REQUIREMENTS: Thermal Aging Test

Electrical:
Twisted Pair—Min 155 °C

Mechanical:
Helical Coil—Min 155 °C
or Twisted Coil—Min 155 °C

DIELECTRIC BREAKDOWN VOLTAGE

AWG SIZE	DIELECTRIC STRENGTH MIN BREAKDOWN VOLTAGE	AWG SIZE	DIELECTRIC STRENGTH MIN BREAKDOWN VOLTAGE
14	4445	30	2905
15	4305	31	2625
16	4200	32	2345
17	4095	33	2100
18	3990	34	2890
19	3885	35	1890
20	3780	36	1680
21	3675	37	1505
22	3505	38	1365
23	3500	39	1190
24	3395	40	1085
25	3325	41	980
26	3220	42	875
27	3150	43	700
28	3045	44	630
29	3010		

NEMA Standard 5-27-1987.

ADDITIONAL PROPERTIES WHICH MAY BE SPECIFIED

SOLVENTLESS VARNISHES

Chemical Resistance
Dielectric Strength
Flash Point
Refrigerant Resistance/Extractibles
Gel Time
Mix Compatibility
Percent Monomer (Reactive Diluent)
Permittivity (Dielectric Constant) and Dissipation Factor
Specific Gravity
Thixotropic Index
Viscosity

SOLVENT VARNISHES

Chemical Resistance
Dielectric Strength
Flash Point
Refrigerant Resistance/Extractibles
Mix Compatibility
Non-Volatile Matter
Permittivity (Dielectric Constant) and Dissipation Factor
Specific Gravity
Viscosity

The performance characteristics of a proven electrical insulation system may vary depending upon the source of the specific components. Therefore, the user of this standard should verify the performance of the candidate component(s) before use.

Authorized Engineering Information 5-27-1987.

Copyright National Electrical Manufacturers Association
Provided by IHS under license with NEMA
No reproduction or networking permitted without license from IHS
Not for Resale

TYPE: EV 155/30

PRODUCT DESCRIPTION: An electrical insulating varnish which has a thermal class of 155 when tested over MW 30 magnet wire shall meet the general requirements listed below.

GENERAL REQUIREMENTS: Thermal Aging Test

Electrical:
Twisted Pair—Min 155 °C

Mechanical:
Helical Coil—Min 155 °C
or Twisted Coil—Min 155 °C

DIELECTRIC BREAKDOWN VOLTAGE

AWG SIZE	DIELECTRIC STRENGTH MIN BREAKDOWN VOLTAGE	AWG SIZE	DIELECTRIC STRENGTH MIN BREAKDOWN VOLTAGE
14	4935	30	3220
15	4795	31	2905
16	4655	32	2590
17	4550	33	2345
18	4445	34	2100
19	4305	35	1855
20	4200	36	1680
21	4095	37	1505
22	3990	38	1330
23	3885	39	1190
24	3780	40	1085
25	3675	41	980
26	3570	42	875
27	3500	43	770
28	3395	44	700
29	3325		

NEMA Standard 5-27-1987.

ADDITIONAL PROPERTIES WHICH MAY BE SPECIFIED

SOLVENTELSS VARNISHES

Chemical Resistance
Dielectric Strength
Flash Point
Refrigerant Resistance/Extractibles
Gel Time
Mix Compatibility
Percent Monomer (Reactive Diluent)
Permittivity (Dielectric Constant) and Dissipation Factor
Specific Gravity
Thixotropic Index
Viscosity

SOLVENT VARNISHES

Chemical Resistance
Dielectric Strength
Flash Point
Refrigerant Resistance/Extractibles
Mix Compatibility
Non-Volatile Matter
Permittivity (Dielectric Constant) and Dissipation Factor
Specific Gravity
Viscosity

The performance characteristics of a proven electrical insulation system may vary depending upon the source of the specific components. Therefore, the user of this standard should verify the performance of the candidate component(s) before use.

Authorized Engineering Information 5-27-1987.

Copyright National Electrical Manufacturers Association
Provided by IHS under license with NEMA
No reproduction or networking permitted without license from IHS
Not for Resale

TYPE: EV 155/35

PRODUCT DESCRIPTION: An electrical insulating varnish which has a thermal class of 155 when tested over MW 35 magnet wire shall meet the general requirements listed below.

GENERAL REQUIREMENTS: Thermal Aging Test

Electrical:
Twisted Pair—Min 155 °C

Mechanical:
Helical Coil—Min 155 °C
or Twisted Coil—Min 155 °C

DIELECTRIC BREAKDOWN VOLTAGE

AWG SIZE	DIELECTRIC STRENGTH MIN BREAKDOWN VOLTAGE	AWG SIZE	DIELECTRIC STRENGTH MIN BREAKDOWN VOLTAGE
14	4935	30	3220
15	4795	31	2905
16	4655	32	2590
17	4550	33	2345
18	4445	34	2100
19	4305	35	1855
20	4200	36	1680
21	4095	37	1505
22	3990	38	1330
23	3885	39	1190
24	3780	40	1085
25	3675	41	980
26	3570	42	875
27	3500	43	770
28	3395	44	700
29	3325		

NEMA Standard 5-27-1987.

ADDITIONAL PROPERTIES WHICH MAY BE SPECIFIED

SOLVENTLESS VARNISHES

Chemical Resistance
Dielectric Strength
Flash Point
Refrigerant Resistance/Extractibles
Gel Time
Mix Compatibility
Percent Monomer (Reactive Diluent)
Permittivity (Dielectric Constant) and Dissipation Factor
Specific Gravity
Thixotropic Index
Viscosity

SOLVENT VARNISHES

Chemical Resistance
Dielectric Strength
Flash Point
Refrigerant Resistance/Extractibles
Mix Compatibility
Non-Volatile Matter
Permittivity (Dielectric Constant) and Dissipation Factor
Specific Gravity
Viscosity

The performance characteristics of a proven electrical insulation system may vary depending upon the source of the specific components. Therefore, the user of this standard should verify the performance of the candidate component(s) before use.

Authorized Engineering Information 5-27-1987.

Copyright National Electrical Manufacturers Association
Provided by IHS under license with NEMA
No reproduction or networking permitted without license from IHS
Not for Resale

TYPE: EV 155/73

PRODUCT DESCRIPTION: An electrical insulating varnish which has a thermal class of 155 when tested over MW 73 magnet wire shall meet the general requirements listed below.

GENERAL REQUIREMENTS: Thermal Aging Test

Electrical:
Twisted Pair—Min 155 °C

Mechanical:
Helical Coil—Min 155 °C
or Twisted Coil—Min 155 °C

DIELECTRIC BREAKDOWN VOLTAGE

AWG SIZE	DIELECTRIC STRENGTH MIN BREAKDOWN VOLTAGE	AWG SIZE	DIELECTRIC STRENGTH MIN BREAKDOWN VOLTAGE
14	8850	23	7000
15	8650	24	6790
16	8400	25	6620
17	8190	26	6440
18	7980	27	6300
19	7770	28	6125
20	7560	29	5950
21	7350	30	5800
22	7170		

Refrigerant Resistance/Extractibles — Maximum value shall be agreed to between buyer and seller.

NEMA Standard 5-27-1987.

ADDITIONAL PROPERTIES WHICH MAY BE SPECIFIED

SOLVENTLESS VARNISHES

Chemical Resistance
Dielectric Strength
Flash Point
Gel Time
Mix Compatibility
Percent Monomer (Reactive Diluent)
Permittivity (Dielectric Constant) and Dissipation Factor
Specific Gravity
Thixotropic Index
Viscosity

SOLVENT VARNISHES

Chemical Resistance
Dielectric Strength
Flash Point
Mix Compatibility
Non-Volatile Matter
Permittivity (Dielectric Constant) and Dissipation Factor
Specific Gravity
Viscosity

The performance characteristics of a proven electrical insulation system may vary depending upon the source of the specific components. Therefore, the user of this standard should verify the performance of the candidate component(s) before use.

Authorized Engineering Information 5-27-1987.

Copyright National Electrical Manufacturers Association
Provided by IHS under license with NEMA
No reproduction or networking permitted without license from IHS
Not for Resale

TYPE: EV 155/74

PRODUCT DESCRIPTION: An electrical insulating varnish which has a thermal class of 155 when tested over MW 74 magnet wire testing shall meet the general requirements listed below.

GENERAL REQUIREMENTS: Thermal Aging Test

Electrical:
Twisted Pair—Min 155 °C

Mechanical:
Helical Coil—Min 155 °C
or Twisted Coil—Min 155 °C

DIELECTRIC BREAKDOWN VOLTAGE

AWG SIZE	DIELECTRIC STRENGTH MIN BREAKDOWN VOLTAGE	AWG SIZE	DIELECTRIC STRENGTH MIN BREAKDOWN VOLTAGE
14	4935	30	3220
15	4795	31	2905
16	4655	32	2590
17	4550	33	2345
18	4445	34	2100
19	4305	35	1855
20	4200	36	1680
21	4095	37	1505
22	3990	38	1330
23	3885	39	1190
24	3780	40	1085
25	3675	41	980
26	3570	42	875
27	3500	43	770
28	3395	44	700
29	3325		

NEMA Standard 5-27-1987.

ADDITIONAL PROPERTIES WHICH MAY BE SPECIFIED

SOLVENTLESS VARNISHES

Chemical Resistance
Dielectric Strength
Flash Point
Refrigerant Resistance/Extractibles
Gel Time
Mix Compatibility
Percent Monomer (Reactive Diluent)
Permittivity (Dielectric Constant) and Dissipation Factor
Specific Gravity
Thixotropic Index
Viscosity

SOLVENT VARNISHES

Chemical Resistance
Dielectric Strength
Flash Point
Refrigerant Resistance/Extractibles
Mix Compatibility
Non-Volatile Matter
Permittivity (Dielectric Constant) and Dissipation Factor
Specific Gravity
Viscosity

The performance characteristics of a proven electrical insulation system may vary depending upon the source of the specific components. Therefore, the user of this standard should verify the performance of the candidate component(s) before use.

Authorized Engineering Information 5-27-1987.

Copyright National Electrical Manufacturers Association
Provided by IHS under license with NEMA
No reproduction or networking permitted without license from IHS
Not for Resale

TYPE: EV 155/75

PRODUCT DESCRIPTION: An electrical insulating varnish which has a thermal class of 155 when tested over MW 75 magnet wire shall meet the general requirements listed below.

GENERAL REQUIREMENTS: Thermal Aging Test

Electrical:
Twisted Pair—Min 155 °C

Mechanical:
Helical Coil—Min 155 °C
or Twisted Coil—Min 155 °C

DIELECTRIC BREAKDOWN VOLTAGE

AWG SIZE	DIELECTRIC STRENGTH MIN BREAKDOWN VOLTAGE	AWG SIZE	DIELECTRIC STRENGTH MIN BREAKDOWN VOLTAGE
25	3675	35	1855
26	3570	36	1680
27	2500	37	1505
28	3395	38	1330
29	3325	39	1190
30	3220	40	1085
31	2905	41	980
32	2590	42	875
33	2345	43	770
34	2100	44	700

NEMA Standard 5-27-1987.

ADDITIONAL PROPERTIES WHICH MAY BE SPECIFIED

SOLVENTLESS VARNISHES

Chemical Resistance
Dielectric Strength
Flash Point
Refrigerant Resistance/Extractibles
Gel Time
Mix Compatibility
Percent Monomer (Reactive Diluent)
Permittivity (Dielectric Constant) and Dissipation Factor
Specific Gravity
Thixotropic Index
Viscosity

SOLVENT VARNISHES

Chemical Resistance
Dielectric Strength
Flash Point
Refrigerant Resistance/Extractibles
Mix Compatibility
Non-Volatile Matter
Permittivity (Dielectric Constant) and Dissipation Factor
Specific Gravity
Viscosity

The performance characteristics of a proven electrical insulation system may vary depending upon the source of the specific components. Therefore, the user of this standard should verify the performance of the candidate component(s) before use.

Authorized Engineering Information 5-27-1987.

Copyright National Electrical Manufacturers Association
Provided by IHS under license with NEMA
No reproduction or networking permitted without license from IHS
Not for Resale

TYPE: EV 155/GC

PRODUCT DESCRIPTION: An electrical insulating varnish which has a thermal class of 155 when tested over glass cloth shall meet the general requirements listed below.

GENERAL REQUIREMENTS: Thermal Aging Test

Curved Electrodes—Min 155 °C

DIELECTRIC BREAKDOWN VOLTAGE

Values shall be agreed to between buyer and seller.

NEMA Standard 5-27-1987.

ADDITIONAL PROPERTIES WHICH MAY BE SPECIFIED

SOLVENTLESS VARNISHES

Chemical Resistance
Dielectric Strength
Flash Point
Refrigerant Resistance/Extractibles
Gel Time
Mix Compatibility
Percent Monomer (Reactive Diluent)
Permittivity (Dielectric Constant) and Dissipation Factor
Specific Gravity
Thixotropic Index
Viscosity

SOLVENT VARNISHES

Chemical Resistance
Dielectric Strength
Flash Point
Refrigerant Resistance/Extractibles
Mix Compatibility
Non-Volatile Matter
Permittivity (Dielectric Constant) and Dissipation Factor
Specific Gravity
Viscosity

The performance characteristics of a proven electrical insulation system may vary depending upon the source of the specific components. Therefore, the user of this standard should verify the performance of the candidate component(s) before use.

The thermal class obtained may be used to classify a flexible insulating varnish where helical coil or twisted coil tests are not applicable.

Authorized Engineering Information 5-27-1987.

Copyright National Electrical Manufacturers Association
Provided by IHS under license with NEMA
No reproduction or networking permitted without license from IHS
Not for Resale

TYPE: EV 180/16

PRODUCT DESCRIPTION: An electrical insulating varnish which has a thermal class of 180 when tested over MW 16 magnet wire shall meet the general requirements listed below.

GENERAL REQUIREMENTS: Thermal Aging Test

Electrical:
Twisted Pair—Min 180°C

Mechanical:
Helical Coil—Min 180°C
or Twisted Coil—Min 180°C

DIELECTRIC BREAKDOWN VOLTAGE

AWG SIZE	DIELECTRIC STRENGTH MIN BREAKDOWN VOLTAGE	AWG SIZE	DIELECTRIC STRENGTH MIN BREAKDOWN VOLTAGE
14	4935	30	3220
15	4795	31	2905
16	4655	32	2590
17	4550	33	2345
18	4445	34	2100
19	4305	35	1855
20	4200	36	1680
21	4095	37	1505
22	3990	38	1330
23	3885	39	1190
24	3780	40	1085
25	3675	41	980
26	3570	42	875
27	3500	43	770
28	3395	44	700
29	3325		

NEMA Standard 5-27-1987.

ADDITIONAL PROPERTIES WHICH MAY BE SPECIFIED

SOLVENTLESS VARNISHES

Bond Strength
Chemical Resistance
Dielectric Strength
Flash Point
Refrigerant Resistance/Extractibles
Gel Time
Mix Compatibility
Percent Monomer (Reactive Diluent)
Permittivity (Dielectric Constant) and Dissipation Factor
Specific Gravity
Thixotropic Index
Viscosity

SOLVENT VARNISHES

Bond Strength
Chemical Resistance
Dielectric Strength
Flash Point
Refrigerant Resistance/Extractibles
Mix Compatibility
Non-Volatile Matter
Permittivity (Dielectric Constant) and Dissipation Factor
Specific Gravity
Viscosity

The performance characteristics of a proven electrical insulation system may vary depending upon the source of the specific components. Therefore, the user of this standard should verify the performance of the candidate component(s) before use.

Authorized Engineering Information 5-27-1987.

Copyright National Electrical Manufacturers Association
Provided by IHS under license with NEMA
No reproduction or networking permitted without license from IHS
Not for Resale

TYPE: EV 180/24

PRODUCT DESCRIPTION: An electrical insulating varnish which has a thermal class of 180 when tested over MW 24 magnet wire shall meet the general requirements listed below.

GENERAL REQUIREMENTS: Thermal Aging Test

Electrical:
Twisted Pair—Min 180°C

Mechanical:
Helical Coil—Min 180°C
or Twisted Coil—Min 180°C

DIELECTRIC BREAKDOWN VOLTAGE

AWG SIZE	DIELECTRIC STRENGTH MIN BREAKDOWN VOLTAGE	AWG SIZE	DIELECTRIC STRENGTH MIN BREAKDOWN VOLTAGE
14	4445	23	3500
15	4305	24	3395
16	4200	25	3325
17	4095	26	3220
18	3990	27	3150
19	3885	28	3045
20	3780	29	3010
21	3675	30	2905
22	3605		

NEMA Standard 5-27-1987.

ADDITIONAL PROPERTIES WHICH MAY BE SPECIFIED

SOLVENTLESS VARNISHES

Bond Strength
Chemical Resistance
Dielectric Strength
Flash Point
Refrigerant Resistance/Extractibles
Gel Time
Mix Compatibility
Percent Monomer (Reactive Diluent)
Permittivity (Dielectric Constant) and Dissipation Factor
Specific Gravity
Thixotropic Index
Viscosity

SOLVENT VARNISHES

Bond Strength
Chemical Resistance
Dielectric Strength
Flash Point
Refrigerant Resistance/Extractibles
Mix Compatibility
Non-Volatile Matter
Permittivity (Dielectric Constant) and Dissipation Factor
Specific Gravity
Viscosity

The performance characteristics of a proven electrical insulation system may vary depending upon the source of the specific components. Therefore, the user of this standard should verify the performance of the candidate component(s) before use.

Authorized Engineering Information 5-27-1987.

Copyright National Electrical Manufacturers Association
Provided by IHS under license with NEMA
No reproduction or networking permitted without license from IHS
Not for Resale

TYPE: EV 180/26

PRODUCT DESCRIPTION: An electrical insulating varnish which has a thermal class of 180 when tested over MW 26 magnet wire shall meet the general requirements listed below.

GENERAL REQUIREMENTS: Thermal Aging Test

Electrical:
Twisted Pair—Min 180°C

Mechanical:
Helical Coil—Min 180°C
or Twisted Coil—Min 180°C

DIELECTRIC BREAKDOWN VOLTAGE

AWG SIZE	DIELECTRIC STRENGTH MIN BREAKDOWN VOLTAGE	AWG SIZE	DIELECTRIC STRENGTH MIN BREAKDOWN VOLTAGE
25	3675	35	1855
26	3570	36	1680
27	2500	37	1505
28	3395	38	1330
29	3325	39	1190
30	3220	40	1085
31	2905	41	980
32	2590	42	875
33	2345	43	770
34	2100	44	700

NEMA Standard 5-27-1987.

ADDITIONAL PROPERTIES WHICH MAY BE SPECIFIED

SOLVENTLESS VARNISHES

Bond Strength
Chemical Resistance
Dielectric Strength
Flash Point
Refrigerant Resistance/Extractibles
Gel Time
Mix Compatibility
Percent Monomer (Reactive Diluent)
Permittivity (Dielectric Constant) and Dissipation Factor
Specific Gravity
Thixotropic Index
Viscosity

SOLVENT VARNISHES

Bond Strength
Chemical Resistance
Dielectric Strength
Flash Point
Refrigerant Resistance/Extractibles
Mix Compatibility
Non-Volatile Matter
Permittivity (Dielectric Constant) and Dissipation Factor
Specific Gravity
Viscosity

The performance characteristics of a proven electrical insulation system may vary depending upon the source of the specific components. Therefore, the user of this standard should verify the performance of the candidate component(s) before use.

Authorized Engineering Information 5-27-1987.

Copyright National Electrical Manufacturers Association
Provided by IHS under license with NEMA
No reproduction or networking permitted without license from IHS
Not for Resale

TYPE: EV 180/30

PRODUCT DESCRIPTION: An electrical insulating varnish which has a thermal class of 180 when tested over MW 30 magnet wire shall meet the general requirements listed below.

GENERAL REQUIREMENTS: Thermal Aging Test

Electrical:
Twisted Pair—Min 180°C

Mechanical:
Helical Coil—Min 180°C
or Twisted Coil—Min 180°C

DIELECTRIC BREAKDOWN VOLTAGE

AWG SIZE	DIELECTRIC STRENGTH MIN BREAKDOWN VOLTAGE	AWG SIZE	DIELECTRIC STRENGTH MIN BREAKDOWN VOLTAGE
14	4935	30	3220
15	4795	31	2905
16	4655	32	2590
17	4550	33	2345
18	4445	34	2100
19	4305	35	1855
20	4200	36	1680
21	4095	37	1505
22	3990	38	1330
23	3885	39	1190
24	3780	40	1085
25	3675	41	980
26	3570	42	875
27	3500	43	770
28	3395	44	700
29	3325		

NEMA Standard 5-27-1987.

ADDITIONAL PROPERTIES WHICH MAY BE SPECIFIED

SOLVENTLESS VARNISHES

Bond Strength
Chemical Resistance
Dielectric Strength
Flash Point
Refrigerant Resistance/Extractibles
Gel Time
Mix Compatibility
Percent Monomer (Reactive Diluent)
Permittivity (Dielectric Constant) and Dissipation Factor
Specific Gravity
Thixotropic Index
Viscosity

SOLVENT VARNISHES

Bond Strength
Chemical Resistance
Dielectric Strength
Flash Point
Refrigerant Resistance/Extractibles
Mix Compatibility
Non-Volatile Matter
Permittivity (Dielectric Constant) and Dissipation Factor
Specific Gravity
Viscosity

The performance characteristics of a proven electrical insulation system may vary depending upon the source of the specific components. Therefore, the user of this standard should verify the performance of the candidate component(s) before use.

Authorized Engineering Information 5-27-1987.

Copyright National Electrical Manufacturers Association
Provided by IHS under license with NEMA
No reproduction or networking permitted without license from IHS
Not for Resale

TYPE: EV 180/35

PRODUCT DESCRIPTION: An electrical insulating varnish which has a thermal class of 180 when tested over MW 35 magnet wire shall meet the general requirements listed below.

GENERAL REQUIREMENTS: Thermal Aging Test

Electrical:
Twisted Pair—Min 180°C

Mechanical:
Helical Coil—Min 180°C
or Twisted Coil—Min 180°C

DIELECTRIC BREAKDOWN VOLTAGE

AWG SIZE	DIELECTRIC STRENGTH MIN BREAKDOWN VOLTAGE	AWG SIZE	DIELECTRIC STRENGTH MIN BREAKDOWN VOLTAGE
14	4935	30	3220
15	4795	31	2905
16	4655	32	2590
17	4550	33	2345
18	4445	34	2100
19	4305	35	1855
20	4200	36	1680
21	4095	37	1505
22	3990	38	1330
23	3885	39	1190
24	3780	40	1085
25	3675	41	980
26	3570	42	875
27	3500	43	770
28	3395	44	700
29	3325		

NEMA Standard 5-27-1987.

ADDITIONAL PROPERTIES WHICH MAY BE SPECIFIED

SOLVENTLESS VARNISHES

Bond Strength
Chemical Resistance
Dielectric Strength
Flash Point
Refrigerant Resistance/Extractibles
Gel Time
Mix Compatibility
Percent Monomer (Reactive Diluent)
Permittivity (Dielectric Constant) and Dissipation Factor
Specific Gravity
Thixotropic Index
Viscosity

SOLVENT VARNISHES

Bond Strength
Chemical Resistance
Dielectric Strength
Flash Point
Refrigerant Resistance/Extractibles
Mix Compatibility
Non-Volatile Matter
Permittivity (Dielectric Constant) and Dissipation Factor
Specific Gravity
Viscosity

The performance characteristics of a proven electrical insulation system may vary depending upon the source of the specific components. Therefore, the user of this standard should verify the performance of the candidate component(s) before use.

Authorized Engineering Information 5-27-1987.

Copyright National Electrical Manufacturers Association
Provided by IHS under license with NEMA
No reproduction or networking permitted without license from IHS
Not for Resale

TYPE: EV 180/73

PRODUCT DESCRIPTION: An electrical insulating varnish which has a thermal class of 180 when tested over MW 73 magnet wire shall meet the general requirements listed below.

GENERAL REQUIREMENTS: Thermal Aging Test

Electrical:
Twisted Pair—Min 180°C

Mechanical:
Helical Coil—Min 180°C
or Twisted Coil—Min 180°C

DIELECTRIC BREAKDOWN VOLTAGE

AWG SIZE	DIELECTRIC STRENGTH MIN BREAKDOWN VOLTAGE	AWG SIZE	DIELECTRIC STRENGTH MIN BREAKDOWN VOLTAGE
14	8850	23	7000
15	8650	24	6790
16	8400	25	6620
17	8190	26	6440
18	7980	27	6300
19	7770	28	6125
20	7560	29	5950
21	7350	30	5800
22	7170		

Refrigerant Resistance/Extractibles — Maximum value shall be agreed to between buyer and seller.

NEMA Standard 5-27-1987.

ADDITIONAL PROPERTIES WHICH MAY BE SPECIFIED

SOLVENTLESS VARNISHES

Bond Strength
Chemical Resistance
Dielectric Strength
Flash Point
Gel Time
Mix Compatibility
Percent Monomer (Reactive Diluent)
Permittivity (Dielectric Constant) and Dissipation Factor
Specific Gravity
Thixotropic Index
Viscosity

SOLVENT VARNISHES

Bond Strength
Chemical Resistance
Dielectric Strength
Flash Point
Mix Compatibility
Non-Volatile Matter
Permittivity (Dielectric Constant) and Dissipation Factor
Specific Gravity
Viscosity

The performance characteristics of a proven electrical insulation system may vary depending upon the source of the specific components. Therefore, the user of this standard should verify the performance of the candidate component(s) before use.

Authorized Engineering Information 5-27-1987.

Copyright National Electrical Manufacturers Association
Provided by IHS under license with NEMA
No reproduction or networking permitted without license from IHS
Not for Resale

TYPE: EV 180/74

PRODUCT DESCRIPTION: An electrical insulating varnish which has a thermal class of 180 when tested over MW 74 magnet wire shall meet the general requirements listed below.

GENERAL REQUIREMENTS: Thermal Aging Test

Electrical:
Twisted Pair—Min 180°C

Mechanical:
Helical Coil—Min 180°C
or Twisted Coil—Min 180°C

DIELECTRIC BREAKDOWN VOLTAGE

AWG SIZE	DIELECTRIC STRENGTH MIN BREAKDOWN VOLTAGE	AWG SIZE	DIELECTRIC STRENGTH MIN BREAKDOWN VOLTAGE
14	4935	30	3220
15	4795	31	2905
16	4655	32	2590
17	4550	33	2345
18	4445	34	2100
19	4305	35	1855
20	4200	36	1680
21	4095	37	1505
22	3990	38	1330
23	3885	39	1190
24	3780	40	1085
25	3675	41	980
26	3570	42	875
27	3500	43	770
28	3395	44	700
29	3325		

NEMA Standard 5-27-1987.

ADDITIONAL PROPERTIES WHICH MAY BE SPECIFIED

SOLVENTLESS VARNISHES

Bond Strength
Chemical Resistance
Dielectric Strength
Flash Point
Refrigerant Resistance/Extractibles
Gel Time
Mix Compatibility
Percent Monomer (Reactive Diluent)
Permittivity (Dielectric Constant) and Dissipation Factor
Specific Gravity
Thixotropic Index
Viscosity

SOLVENT VARNISHES

Bond Strength
Chemical Resistance
Dielectric Strength
Flash Point
Refrigerant Resistance/Extractibles
Mix Compatibility
Non-Volatile Matter
Permittivity (Dielectric Constant) and Dissipation Factor
Specific Gravity
Viscosity

The performance characteristics of a proven electrical insulation system may vary depending upon the source of the specific components. Therefore, the user of this standard should verify the performance of the candidate component(s) before use.

Authorized Engineering Information 5-27-1987.

Copyright National Electrical Manufacturers Association
Provided by IHS under license with NEMA
No reproduction or networking permitted without license from IHS
Not for Resale

TYPE: EV 180/GC

PRODUCT DESCRIPTION: An electrical insulating varnish which has a thermal class of 180 when tested over glass cloth shall meet the general requirements listed below.

GENERAL REQUIREMENTS: Thermal Aging Test

Curved Electrodes—Min 180°C

DIELECTRIC BREAKDOWN VOLTAGE

Value shall be agreed to between buyer and seller.

NEMA Standard 5-27-1987.

ADDITIONAL PROPERTIES WHICH MAY BE SPECIFIED

SOLVENTLESS VARNISHES

Chemical Resistance
Dielectric Strength
Flash Point
Refrigerant Resistance/Extractibles
Gel Time
Mix Compatibility
Percent Monomer (Reactive Diluent)
Permittivity (Dielectric Constant) and Dissipation Factor
Specific Gravity
Thixotropic Index
Viscosity

SOLVENT VARNISHES

Chemical Resistance
Dielectric Strength
Flash Point
Refrigerant Resistance/Extractibles
Mix Compatibility
Non-Volatile Matter
Permittivity (Dielectric Constant) and Dissipation Factor
Specific Gravity
Viscosity

The performance characteristics of a proven electrical insulation system may vary depending upon the source of the specific components. Therefore, the user of this standard should verify the performance of the candidate component(s) before use.

The thermal class obtained may be used to classify a flexible insulating varnish where helical coil or twisted coil tests are not applicable.

Authorized Engineering Information 5-27-1987.

Copyright National Electrical Manufacturers Association
Provided by IHS under license with NEMA
No reproduction or networking permitted without license from IHS
Not for Resale

TYPE: EV 200/16

PRODUCT DESCRIPTION: An electrical insulating varnish which has a thermal class of 200 when tested over MW 16 magnet wire shall meet the general requirements listed below.

GENERAL REQUIREMENTS: Thermal Aging Test

Electrical:
Twisted Pair—Min 200°C

Mechanical:
Helical Coil—Min 200°C
or Twisted Coil—Min 200°C

DIELECTRIC BREAKDOWN VOLTAGE

AWG SIZE	DIELECTRIC STRENGTH MIN BREAKDOWN VOLTAGE	AWG SIZE	DIELECTRIC STRENGTH MIN BREAKDOWN VOLTAGE
14	4935	30	3220
15	4795	31	2905
16	4655	32	2590
17	4550	33	2345
18	4445	34	2100
19	4305	35	1855
20	4200	36	1680
21	4095	37	1505
22	3990	38	1330
23	3885	39	1190
24	3780	40	1085
25	3675	41	980
26	3570	42	875
27	3500	43	770
28	3395	44	700
29	3325		

NEMA Standard 5-27-1987.

ADDITIONAL PROPERTIES WHICH MAY BE SPECIFIED

SOLVENTLESS VARNISHES

Bond Strength
Chemical Resistance
Dielectric Strength
Flash Point
Refrigerant Resistance/Extractibles
Gel Time
Mix Compatibility
Percent Monomer (Reactive Diluent)
Permittivity (Dielectric Constant) and Dissipation Factor
Specific Gravity
Thixotropic Index
Viscosity

SOLVENT VARNISHES

Bond Strength
Chemical Resistance
Dielectric Strength
Flash Point
Refrigerant Resistance/Extractibles
Mix Compatibility
Non-Volatile Matter
Permittivity (Dielectric Constant) and Dissipation Factor
Specific Gravity
Viscosity

The performance characteristics of a proven electrical insulation system may vary depending upon the source of the specific components. Therefore, the user of this standard should verify the performance of the candidate component(s) before use.

Authorized Engineering Information 5-27-1987.

Copyright National Electrical Manufacturers Association
Provided by IHS under license with NEMA
No reproduction or networking permitted without license from IHS
Not for Resale

TYPE: EV 220/30

PRODUCT DESCRIPTION: An electrical insulating varnish which has a thermal class of 220 when tested over MW 30 magnet wire shall meet the general requirements listed below.

GENERAL REQUIREMENTS: Thermal Aging Test

Electrical:
Twisted Pair—Min 200°C

Mechanical:
Helical Coil—Min 200°C
or Twisted Coil—Min 200°C

DIELECTRIC BREAKDOWN VOLTAGE

AWG SIZE	DIELECTRIC STRENGTH MIN BREAKDOWN VOLTAGE	AWG SIZE	DIELECTRIC STRENGTH MIN BREAKDOWN VOLTAGE
14	4935	30	3220
15	4795	31	2905
16	4655	32	2590
17	4550	33	2345
18	4445	34	2100
19	4305	35	1855
20	4200	36	1680
21	4095	37	1505
22	3990	38	1330
23	3885	39	1190
24	3780	40	1085
25	3675	41	980
26	3570	42	875
27	3500	43	770
28	3395	44	700
29	3325		

NEMA Standard 5-27-1987.

ADDITIONAL PROPERTIES WHICH MAY BE SPECIFIED

SOLVENTLESS VARNISHES

Bond Strength
Chemical Resistance
Dielectric Strength
Flash Point
Refrigerant Resistance/Extractibles
Gel Time
Mix Compatibility
Percent Monomer (Reactive Diluent)
Permittivity (Dielectric Constant) and Dissipation Factor
Specific Gravity
Thixotropic Index
Viscosity

SOLVENT VARNISHES

Bond Strength
Chemical Resistance
Dielectric Strength
Flash Point
Refrigerant Resistance/Extractibles
Mix Compatibility
Non-Volatile Matter
Permittivity (Dielectric Constant) and Dissipation Factor
Specific Gravity
Viscosity

The performance characteristics of a proven electrical insulation system may vary depending upon the source of the specific components. Therefore, the user of this standard should verify the performance of the candidate component(s) before use.

Authorized Engineering Information 5-27-1987.

Copyright National Electrical Manufacturers Association
Provided by IHS under license with NEMA
No reproduction or networking permitted without license from IHS
Not for Resale

TYPE: EV 200/35

PRODUCT DESCRIPTION: An electrical insulating varnish which has a thermal class of 200 when tested over MW 35 magnet wire shall meet the general requirements listed below.

GENERAL REQUIREMENTS: Thermal Aging Test

Electrical:
Twisted Pair—Min 200°C

Mechanical:
Helical Coil—Min 200°C
or Twisted Coil—Min 200°C

DIELECTRIC BREAKDOWN VOLTAGE

AWG SIZE	DIELECTRIC STRENGTH MIN BREAKDOWN VOLTAGE	AWG SIZE	DIELECTRIC STRENGTH MIN BREAKDOWN VOLTAGE
14	4935	30	3220
15	4795	31	2905
16	4655	32	2590
17	4550	33	2345
18	4445	34	2100
19	4305	35	1855
20	4200	36	1680
21	4095	37	1505
22	3990	38	1330
23	3885	39	1190
24	3780	40	1085
25	3675	41	980
26	3570	42	875
27	3500	43	770
28	3395	44	700
29	3325		

NEMA Standard 5-27-1987.

ADDITIONAL PROPERTIES WHICH MAY BE SPECIFIED

SOLVENTLESS VARNISHES

Bond Strength
Chemical Resistance
Dielectric Strength
Flash Point
Refrigerant Resistance/Extractibles
Gel Time
Mix Compatibility
Percent Monomer (Reactive Diluent)
Permittivity (Dielectric Constant) and Dissipation Factor
Specific Gravity
Thixotropic Index
Viscosity

SOLVENT VARNISHES

Bond Strength
Chemical Resistance
Dielectric Strength
Flash Point
Refrigerant Resistance/Extractibles
Mix Compatibility
Non-Volatile Matter
Permittivity (Dielectric Constant) and Dissipation Factor
Specific Gravity
Viscosity

The performance characteristics of a proven electrical insulation system may vary depending upon the source of the specific components. Therefore, the user of this standard should verify the performance of the candidate component(s) before use.

Authorized Engineering Information 5-27-1987.

Copyright National Electrical Manufacturers Association
Provided by IHS under license with NEMA
No reproduction or networking permitted without license from IHS
Not for Resale

TYPE: EV 200/73

PRODUCT DESCRIPTION: An electrical insulating varnish which has a thermal class of 200 when tested over MW 73 magnet wire shall meet the general requirements listed below.

GENERAL REQUIREMENTS: Thermal Aging Test

Electrical:
Twisted Pair—Min 200°C

Mechanical:
Helical Coil—Min 200°C
or Twisted Coil—Min 200°C

DIELECTRIC BREAKDOWN VOLTAGE

AWG SIZE	DIELECTRIC STRENGTH MIN BREAKDOWN VOLTAGE	AWG SIZE	DIELECTRIC STRENGTH MIN BREAKDOWN VOLTAGE
14	8850	23	7000
15	8650	24	6790
16	8400	25	6620
17	8190	26	6440
18	7980	27	6300
19	7770	28	6125
20	7560	29	5950
21	7350	30	5800
22	7170		

Refrigerant Resistance/Extractibles — Maximum value shall be agreed to between buyer and seller.

NEMA Standard 5-27-1987.

ADDITIONAL PROPERTIES WHICH MAY BE SPECIFIED

SOLVENTLESS VARNISHES

Bond Strength
Chemical Resistance
Dielectric Strength
Flash Point
Gel Time
Mix Compatibility
Percent Monomer (Reactive Diluent)
Permittivity (Dielectric Constant) and Dissipation Factor
Specific Gravity
Thixotropic Index
Viscosity

SOLVENT VARNISHES

Bond Strength
Chemical Resistance
Dielectric Strength
Flash Point
Mix Compatibility
Non-Volatile Matter
Permittivity (Dielectric Constant) and Dissipation Factor
Specific Gravity
Viscosity

The performance characteristics of a proven electrical insulation system may vary depending upon the source of the specific components. Therefore, the user of this standard should verify the performance of the candidate component(s) before use.

Authorized Engineering Information 5-27-1987.

Copyright National Electrical Manufacturers Association
Provided by IHS under license with NEMA
No reproduction or networking permitted without license from IHS
Not for Resale

TYPE: EV 200/74

PRODUCT DESCRIPTION: An electrical insulating varnish which has a thermal class of 200 when tested over MW 74 magnet wire shall meet the general requirements listed below.

GENERAL REQUIREMENTS: Thermal Aging Test

Electrical:
Twisted Pair—Min 200°C

Mechanical:
Helical Coil—Min 200°C
or Twisted Coil—Min 200°C

DIELECTRIC BREAKDOWN VOLTAGE

AWG SIZE	DIELECTRIC STRENGTH MIN BREAKDOWN VOLTAGE	AWG SIZE	DIELECTRIC STRENGTH MIN BREAKDOWN VOLTAGE
14	4935	30	3220
15	4795	31	2905
16	4655	32	2590
17	4550	33	2345
18	4445	34	2100
19	4305	35	1855
20	4200	36	1680
21	4095	37	1505
22	3990	38	1330
23	3885	39	1190
24	3780	40	1085
25	3675	41	980
26	3570	42	875
27	3500	43	770
28	3395	44	700
29	3325		

NEMA Standard 5-27-1987.

ADDITIONAL PROPERTIES WHICH MAY BE SPECIFIED

SOLVENTLESS VARNISHES

Bond Strength
Chemical Resistance
Dielectric Strength
Flash Point
Refrigerant Resistance/Extractibles
Gel Time
Mix Compatibility
Percent Monomer (Reactive Diluent)
Permittivity (Dielectric Constant) and Dissipation Factor
Specific Gravity
Thixotropic Index
Viscosity

SOLVENT VARNISHES

Bond Strength
Chemical Resistance
Dielectric Strength
Flash Point
Refrigerant Resistance/Extractibles
Mix Compatibility
Non-Volatile Matter
Permittivity (Dielectric Constant) and Dissipation Factor
Specific Gravity
Viscosity

The performance characteristics of a proven electrical insulation system may vary depending upon the source of the specific components. Therefore, the user of this standard should verify the performance of the candidate component(s) before use.

Authorized Engineering Information 5-27-1987.

Copyright National Electrical Manufacturers Association
Provided by IHS under license with NEMA
No reproduction or networking permitted without license from IHS
Not for Resale

TYPE: EV 200/GC

PRODUCT DESCRIPTION: An electrical insulating varnish which has a thermal class of 200 when tested over glass cloth shall meet the general requirements listed below.

GENERAL REQUIREMENTS: Thermal Aging Test

Curved Electrodes—Min 200°C

DIELECTRIC BREAKDOWN VOLTAGE

Values shall be agreed to between buyer and seller.

NEMA Standard 5-27-1987.

ADDITIONAL PROPERTIES WHICH MAY BE SPECIFIED

SOLVENTLESS VARNISHES

Chemical Resistance
Dielectric Strength
Flash Point
Refrigerant Resistance/Extractibles
Gel Time
Mix Compatibility
Percent Monomer (Reactive Diluent)
Permittivity (Dielectric Constant) and Dissipation Factor
Specific Gravity
Thixotropic Index
Viscosity

SOLVENT VARNISHES

Chemical Resistance
Dielectric Strength
Flash Point
Refrigerant Resistance/Extractibles
Mix Compatibility
Non-Volatile Matter
Permittivity (Dielectric Constant) and Dissipation Factor
Specific Gravity
Viscosity

The performance characteristics of a proven electrical insulation system may vary depending upon the source of the specific components. Therefore, the user of this standard should verify the performance of the candidate component(s) before use.

The thermal class obtained may be used to classify a flexible insulating varnish where helical coil or twisted coil tests are not applicable.

Authorized Engineering Information 5-27-1987.

Copyright National Electrical Manufacturers Association
Provided by IHS under license with NEMA
No reproduction or networking permitted without license from IHS
Not for Resale

TYPE: EV 220/16

PRODUCT DESCRIPTION: An electrical insulating varnish which has a thermal class of 220 when tested over MW 16 magnet wire shall meet the general requirements listed below.

GENERAL REQUIREMENTS: Thermal Aging Test

Electrical:
Twisted Pair—Min 220°C

Mechanical:
Helical Coil—Min 220°C
or Twisted Coil—Min 220°C

DIELECTRIC BREAKDOWN VOLTAGE

AWG SIZE	DIELECTRIC STRENGTH MIN BREAKDOWN VOLTAGE	AWG SIZE	DIELECTRIC STRENGTH MIN BREAKDOWN VOLTAGE
14	4935	30	3220
15	4795	31	2905
16	4655	32	2590
17	4550	33	2345
18	4445	34	2100
19	4305	35	1855
20	4200	36	1680
21	4095	37	1505
22	3990	38	1330
23	3885	39	1190
24	3780	40	1085
25	3675	41	980
26	3570	42	875
27	3500	43	770
28	3395	44	700
29	3325		

NEMA Standard 5-27-1987.

ADDITIONAL PROPERTIES WHICH MAY BE SPECIFIED

SOLVENTLESS VARNISHES

Bond Strength
Chemical Resistance
Dielectric Strength
Flash Point
Refrigerant Resistance/Extractibles
Gel Time
Mix Compatibility
Percent Monomer (Reactive Diluent)
Permittivity (Dielectric Constant) and Dissipation Factor
Specific Gravity
Thixotropic Index
Viscosity

SOLVENT VARNISHES

Bond Strength
Chemical Resistance
Dielectric Strength
Flash Point
Refrigerant Resistance/Extractibles
Mix Compatibility
Non-Volatile Matter
Permittivity (Dielectric Constant) and Dissipation Factor
Specific Gravity
Viscosity

The performance characteristics of a proven electrical insulation system may vary depending upon the source of the specific components. Therefore, the user of this standard should verify the performance of the candidate component(s) before use.

Authorized Engineering Information 5-27-1987.

Copyright National Electrical Manufacturers Association
Provided by IHS under license with NEMA
No reproduction or networking permitted without license from IHS
Not for Resale

TYPE: EV 240/16

PRODUCT DESCRIPTION: An electrical insulating varnish which has a thermal class of 240 when tested over MW 16 magnet wire shall meet the general requirements listed below.

GENERAL REQUIREMENTS: Thermal Aging Test

Electrical:
Twisted Pair—Min 240°C

Mechanical:
Helical Coil—Min 240°C
or Twisted Coil—Min 240°C

DIELECTRIC BREAKDOWN VOLTAGE

AWG SIZE	DIELECTRIC STRENGTH MIN BREAKDOWN VOLTAGE	AWG SIZE	DIELECTRIC STRENGTH MIN BREAKDOWN VOLTAGE
14	4935	30	3220
15	4795	31	2905
16	4655	32	2590
17	4550	33	2345
18	4445	34	2100
19	4305	35	1855
20	4200	36	1680
21	4095	37	1505
22	3990	38	1330
23	3885	39	1190
24	3780	40	1085
25	3675	41	980
26	3570	42	875
27	3500	43	770
28	3395	44	700
29	3325		

NEMA Standard 5-27-1987.

ADDITIONAL PROPERTIES WHICH MAY BE SPECIFIED

SOLVENTLESS VARNISHES

Bond Strength
Chemical Resistance
Dielectric Strength
Flash Point
Refrigerant Resistance/Extractibles
Gel Time
Mix Compatibility
Percent Monomer (Reactive Diluent)
Permittivity (Dielectric Constant) and Dissipation Factor
Specific Gravity
Thixotropic Index
Viscosity

SOLVENT VARNISHES

Bond Strength
Chemical Resistance
Dielectric Strength
Flash Point
Refrigerant Resistance/Extractibles
Mix Compatibility
Non-Volatile Matter
Permittivity (Dielectric Constant) and Dissipation Factor
Specific Gravity
Viscosity

The performance characteristics of a proven electrical insulation system may vary depending upon the source of the specific components. Therefore, the user of this standard should verify the performance of the candidate component(s) before use.

Authorized Engineering Information 5-27-1987.

Copyright National Electrical Manufacturers Association
Provided by IHS under license with NEMA
No reproduction or networking permitted without license from IHS
Not for Resale

Section 5
TEST METHODS

5.1 BOND STRENGTH—HELICAL COIL METHOD

5.1.1 General

This method is used to evaluate the bond strength of solvent or solventless varnishes using a mechanical test.

NEMA Standard 5-27-1987.

5.1.2 Required Apparatus and/or Materials

The following apparatus shall be used:

1. Varnish to be tested,
2. Enameled wire, 18 AWG heavy build,
3. One quarter inch mandrel,
4. Dipping apparatus "Dip Coater"—Fisher Payne or equivalent,
5. Oven, forced draft,
6. Test fixture and machine; environmental chamber for elevated temperature.

NEMA Standard 5-27-1987.

5.1.3 Required Specimen

The test specimens shall consist of helical coils which have been dipped and cured with the varnish being tested.

NEMA Standard 5-27-1987.

5.1.4 Required Procedure

The following procedures shall be followed:

1. Five coils, 3 inches in length, are prepared by winding 18 AWG magnet wire on a 0.250 inch mandrel.
2. The coils are dipped in solventless, or solvent type varnish which has been previously adjusted in accordance with 3.0. The coils are withdrawn from the varnish at a rate of 4 inches per minute, drained for 10 minutes and then baked according to the manufacturer's recommendation. The coils treated with solvent varnish are then reversed, dipped and baked, using the above procedure. Coils treated with solventless varnish are only single dipped.
3. The 3 inch helical coil shall be placed in the test fixture (see Figure 5-1) with regard to all dimensions shown). The fixture shall be attached to a machine equipped with a drive which has a crosshead speed of 2 inches per minute and a suitable instrument for measuring the force used in breaking the specimen.
4. Bond strengths shall be determined at any temperature mutually agreed upon between buyer and seller.

NEMA Standard 5-27-1987.

5.1.5 Elevated Temperature Bond Strength

When bond strengths are measured at elevated temperatures, the environmental chamber shall enclose the test fixture without inhibiting the movement of the measuring device. The temperature in the chamber shall be maintained within $\pm$ 2°C of the desired temperature. The specimens shall be exposed for 6 minutes ($\pm$ 1 minute) at the desired temperature prior to breaking, in accordance with the procedures in 5.1.4.

NEMA Standard 5-27-1987.

5.1.6 Required Report

The following shall be reported:

1. Varnish,
2. Magnet wire type and manufacturer,
3. Cure time and temperature,
4. Test temperature,
5. Average bond strength.

NEMA Standard 5-27-1987.

Copyright National Electrical Manufacturers Association
Provided by IHS under license with NEMA
No reproduction or networking permitted without license from IHS
Not for Resale

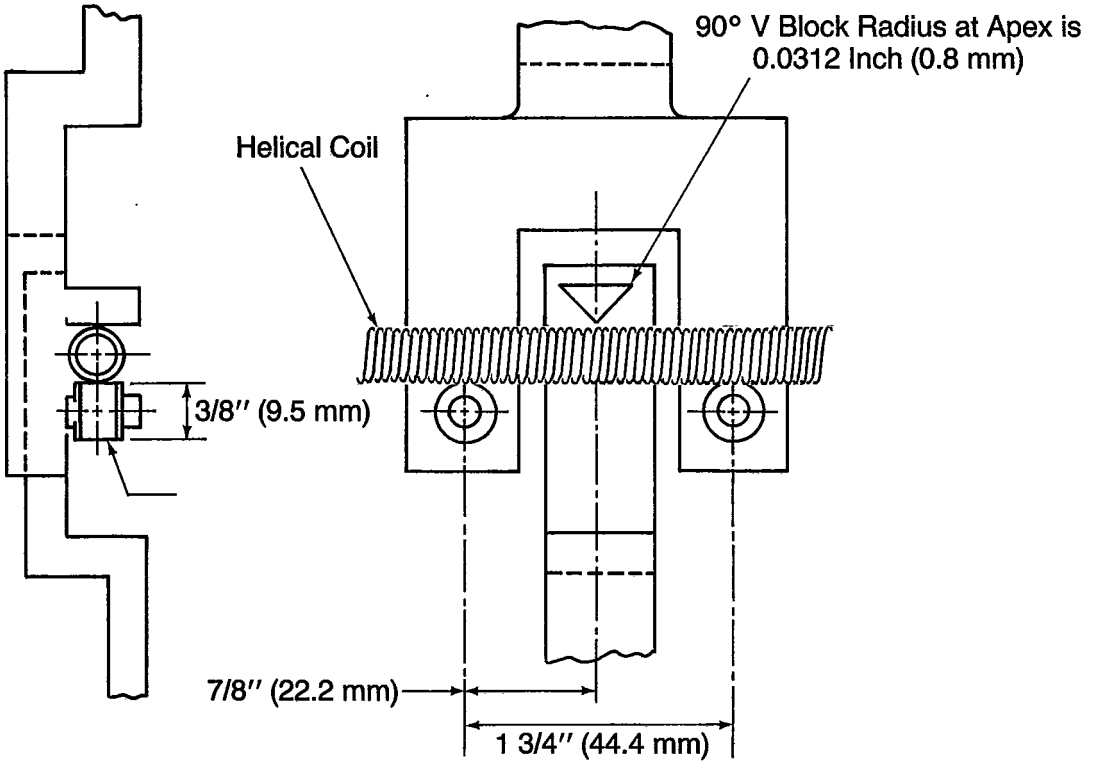

Figure 5-1
TEST FIXTURES FOR BOND STRENGTH TEST

Copyright National Electrical Manufacturers Association
Provided by IHS under license with NEMA
No reproduction or networking permitted without license from IHS
Not for Resale

5.2 BOND STRENGTH—TWISTED COIL METHOD

5.2.1 General

The Twisted Coil Method is used in evaluating bond strength of solventless insulating varnishes.

NEMA Standard 5-27-1987.

5.2.2 Required Apparatus

The following apparatus shall be used:

1. Varnish to be tested,
2. Enameled wire, 28 AWG heavy build,
3. Coil winding jig, as shown in Figure 5-2,
4. Coil twister, as shown in Figure 5-3,
5. Dipping apparatus "Dip Coater"—Fisher Payne or equivalent,
6. Forced draft oven,
7. Test fixture and machine, environmental chamber for elevated temperature.

NEMA Standard 5-27-1987.

5.2.3 Required Specimen

The test specimens shall consist of five twisted coils which have been dipped and cured with the varnish being tested.

NEMA Standard 5-27-1987.

5.2.4 Required Procedure

The following procedure shall be followed:

1. Individual twisted coils are formed using 100 loops of 28 AWG enameled wire. The 100 loops are made by using wire from two spools wrapped 50 times or one spool wrapped 100 times around the mandrel as shown in Figure 5-2.
2. Pull the double strands of wire from the center mandrel through one of the slots and secure the ends around one of the wing nuts on the front plate.
3. Wind 100 turns of wire around the mandrel.
4. After winding, cut the strands leaving about 6 inches of unwound wire. Use this extra length to secure one side of the coil by making four or five loops around the coil.
5. Use the strands from the wing nut to secure the opposite side of the coil by making four or five loops around the coil.
6. Remove the front plate and then remove the coil.
7. By hand, elongate the coil until an elliptical shaped coil is formed.
8. Using a coil twister, as shown in Figure 5-3, twist the elliptical coil two and one half complete turns to produce a tight twisted coil. If the loops are loose do not use the coil.

NEMA Standard 5-27-1987.

5.2.5 Required Dipping and Curing

Single dip the coils as follows:

Submerge the coil horizontally and hold until bubbling stops. Withdraw at a rate of 4 inches per minute. Let the coil drain for 10 minutes in the horizontal position and then cure in accordance with the manufacturer's instructions. Vacuum Pressure Impregnation (VPI) treatment shall be permitted for some products.

NEMA Standard 5-27-1987.

5.2.6 Testing Bond Strength

Test the coil in the same manner and on the same test assembly as prescribed in 5.1 (see Figure 5-1).

NEMA Standard 5-27-1987.

5.2.7 Required Report

The following factors shall be reported:

1. Varnish,
2. Magnet wire type and manufacturer,
3. Cure time and temperature; VPI processing conditions (if used),
4. Test temperature,
5. Average bond strength.

NEMA Standard 5-27-1987.

Copyright National Electrical Manufacturers Association
Provided by IHS under license with NEMA
No reproduction or networking permitted without license from IHS
Not for Resale

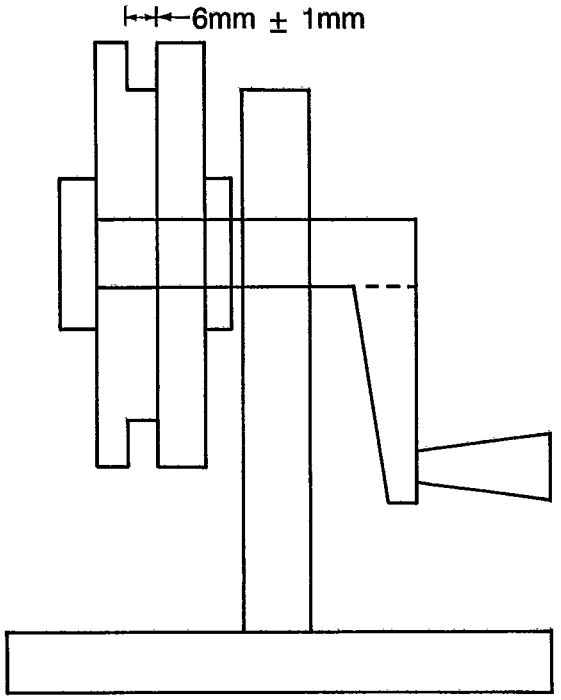

Figure 5-2a
COIL WINDER—SIDE VIEW

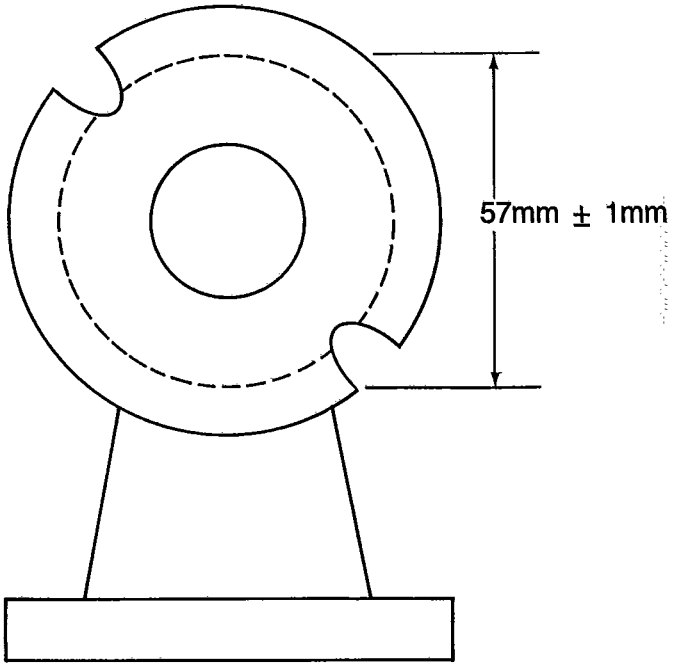

Figure 5-2b
COIL WINDER—FRONT VIEW

Figure 5-2
COIL WINDER

Copyright National Electrical Manufacturers Association
Provided by IHS under license with NEMA
No reproduction or networking permitted without license from IHS
Not for Resale

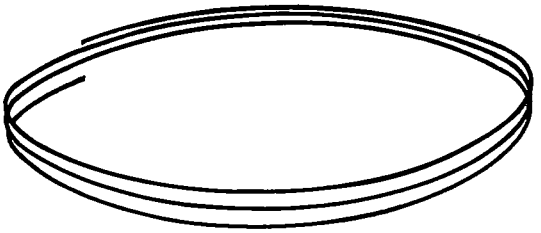

Figure 5-3a
OVAL SHAPED COIL

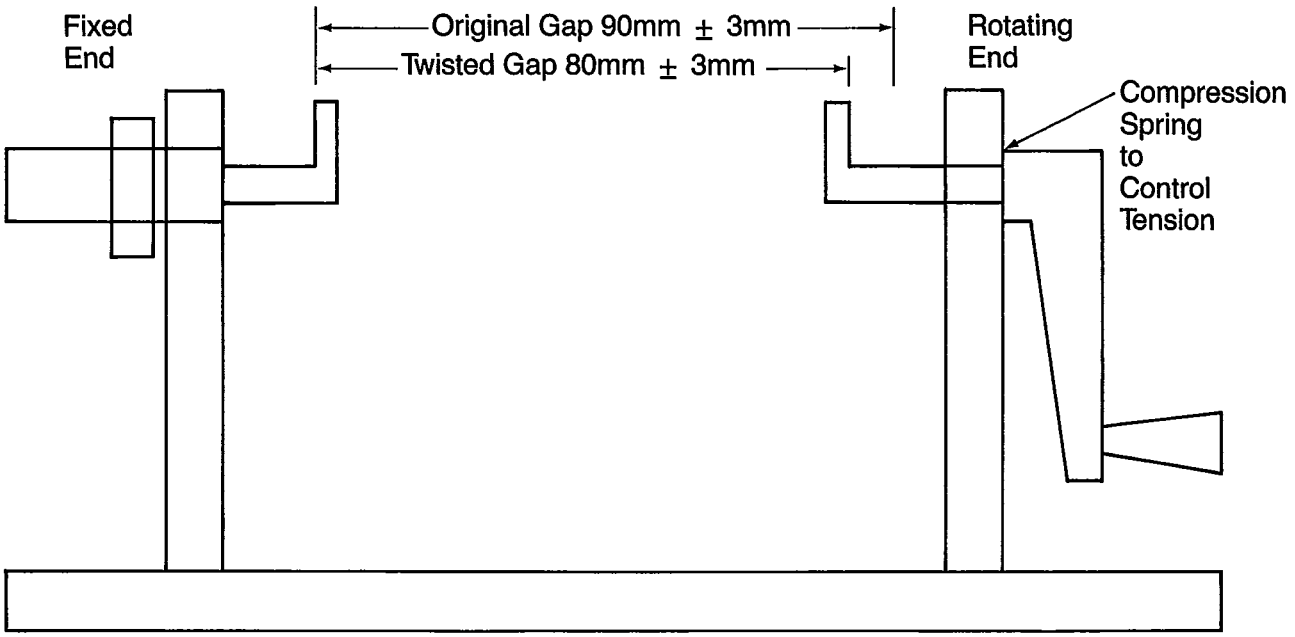

Figure 5-3b
COIL TWISTER

Copyright National Electrical Manufacturers Association
Provided by IHS under license with NEMA
No reproduction or networking permitted without license from IHS
Not for Resale

5.3 CHEMICAL RESISTANCE OF ELECTRICAL INSULATING VARNISH

5.3.1 General

This method evaluates effects of chemicals on the bond strength of cured varnish films.

NEMA Standard 5-27-1987.

5.3.2 Required Apparatus

The following apparatus shall be used:

1. Varnish to be tested,
2. Enameled wire, 18 AWG heavy build,
3. Dipping apparatus "Dip Coater"—Fisher Payne or equivalent,
4. 800 cc heat resistant glass beaker and 150 mm widewatch glass,
5. Forced draft oven,
6. Apparatus for testing bond strength as described in the Helical Coil Method, 5.1 and as shown in Figure 5-1.

NEMA Standard 5-27-1987.

5.3.3 Required Test Specimen

Test specimens shall consist of 10 helical coils, as prescribed in 5.1, which have been dipped and cured with the varnish being tested and prepared in the following manner:

1. Adjust solvent varnish to be tested to give a double film thickness of 2 mils. Use solventless varnish as received.
2. Immerse helical coil in varnish and hold until bubbling stops. Withdraw at a rate of 4 inches per minute and drain for 10 minutes. In the case of thixotropic, solventless varnishes, the drain time shall be in accordance with the manufacturer's recommendations. Prepare 10 coils for each test. Cure according to manufacturer's recommendations.
3. For solvent varnish reverse the coil and repeat step 2.

NEMA Standard 5-27-1987.

5.3.4 Required Procedure

The procedure shall be as follows:

1. Suspend 5 helical coils in the 800 cc beaker and cover the coils with the specified chemical.
2. Cover the beaker with a watch glass and age at the required temperature for 168 hours.
3. Remove coils and blot residual liquid with absorbent material. Test bond strength immediately using the apparatus and procedure in Helical Coil Method. Also test the five remaining coils which were unaged in the same manner.

NEMA Standard 5-27-1987.

5.3.5 Required Report

The following shall be reported:

1. Varnish,
2. Type of wire and manufacturer,
3. Cure time and temperature,
4. Chemical and concentration of chemical used,
5. Exposure temperature and bond strength test temperature,
6. Average bond strength readings of aged and unaged coils.

NEMA Standard 5-27-1987.

Copyright National Electrical Manufacturers Association
Provided by IHS under license with NEMA
No reproduction or networking permitted without license from IHS
Not for Resale

5.4 DIELECTRIC BREAKDOWN VOLTAGE

5.4.1 General

This method determines the dielectric breakdown voltage of twisted pairs of magnet wire coated with a cured varnish film.

NEMA Standard 5-27-1987.

5.4.2 Required Apparatus

The following apparatus shall be used:

1. Varnish to be tested,
2. Enameled wire, 18 AWG heavy build,
3. Apparatus to form the twisted pairs according to NEMA MW 1000,
4. Dipping apparatus "Dip Coater"—Fisher Payne or equivalent,
5. Forced draft oven,
6. Voltage source and meter.

NEMA Standard 5-27-1987.

5.4.3 Required Procedure

The procedure shall be as follows:

1. A specimen of wire shall be formed into a U shape and the two legs shall be twisted together for a distance of approximately 4.75 inches. The total tension on the two legs while being twisted and the number of twists shall be as shown in Table 5-1. The loop shall be cut and the ends shall be carefully and adequately separated. There shall be no sharp bends in the specimen or damage to the insulation.
2. Prepare 10 twisted pairs of specimens as follows: five specimens are dipped in solventless varnish or solvent type varnish, which has been adjusted, according to 3.0. They shall be withdrawn from the varnished at the rate of 4 inches per minute, drained for 10 minutes and then baked according the manufacturer's instructions.

   Solvent varnish specimens are then reverse dipped and baked using the above procedure.

   Carefully snip the ends of one pair of the legs which will then become the electrical contacts.
3. Apply a 60 Hertz variable voltage source between the legs.

   The test transformer shall have a rating of 20 kVA or more and shall provide an essentially undistorted wave form under test conditions.

   The voltage shall start at zero and increase uniformly at the rate of approximately 500 volts per second until breakdown occurs. In the event that breakdown occurs in less than 5 seconds, the rate of increase in voltage shall be reduced to approximately 100 volts per second.

   The trip current of the circuit breaker shall be between 15 and 50 milliamps. The breakdown voltage shall be measured with a meter calibrated in rms (root mean square) volts in accordance with one of the methods described in ANSI/IEEE No. 4.

NEMA Standard 5-27-1987.

5.4.4 Required Report

The following shall be reported:

1. Varnish,
2. Magnet wire type and manufacturer,
3. Cure time and temperature,
4. Average dielectric strength of the varnished and unvarnished magnet wire tested.

NEMA Standard 5-27-1987.

Table 5-1
WIRE TENSION REQUIREMENTS

AWG SIZE	TOTAL TENSION ON SPECIMEN	TOTAL NUMBER TWISTS
8-9*	24 Pounds (107N)	3
10-11	24 Pounds (107N)	3
12-14	12 Pounds (53N)	4
15-17	6 Pounds (27N)	6
18-20	3 Pounds (13N)	8
21-23	1.5 Pounds (7N)	12
24-26	340 Grams (3.3N)	16
27-29	170 Grams (1.7N)	20
30-32	85 Grams (0.8N)	25
33-35	40 Grams (0.4N)	31
36-38	20 Grams (0.2N)	36
39-41	10 Grams (0.1N)	41
42-44	5 Grams (0.05N)	46

*Aluminum only.

Copyright National Electrical Manufacturers Association
Provided by IHS under license with NEMA
No reproduction or networking permitted without license from IHS
Not for Resale

5.5 DIELECTRIC STRENGTH OF SOLVENT OR SOLVENTLESS VARNISHES

5.5.1 General

This method is used to determine the dielectric strength of a cured varnish film that is coated on a metallic substrate.

NEMA Standard 5-27-1987.

5.5.2 Required Apparatus

The following apparatus shall be used:

1. Varnish to be tested,
2. 8 inch × 4 inch metal panels,
3. Dipping apparatus "Dip Coater"—Fisher Payne or equivalent,
4. Forced draft oven,
5. Voltage source, meter, and electrodes.

NEMA Standard 5-27-1987.

5.5.3 Required Procedure

The procedure shall be as follows:

1. Solvent varnishes shall be adjusted in accordance with 3.0. Solventless varnishes shall be tested as received.
2. Using a suitable micrometer, at 10 points, measure the thickness of the metal substrate to determine the average thickness of the metal. Where variations are noted, mark the reverse side of the panel. The test specimens shall be prepared by placing two 8 inch × 4 inch metal panels together and sealing the edges so that a varnish film is obtained on one side of the panel only. The specimens are then dipped in the varnish. They shall be withdrawn at the rate of 4 inches per minute, allowed to drain in a vertical position for 10 minutes and cured in accordance with the manufacturer's recommendations. Solvent varnishes shall be reverse dipped and cured. Solventless varnishes shall be single dipped and cured.
3. After the proper cure cycle, the strips shall be separated without bending and conditioned as follows:

   24 Hours at ambient conditions
   24 Hours immersion in distilled water
   Other conditions as specified
4. Breakdown voltage measurements shall be made using an electrode 0.25 inch in diameter with edges rounded to a radius of 0.032 inch. Circular gaskets shall be permitted to be placed over the end of each electrode to prevent flashover.

   After carefully placing the test specimens between the electrodes connected to a suitable test apparatus, increase the voltage from zero to breakdown at a rate of 500 volts per second. Make a minimum of ten voltage breakdown determinations.
5. Using a suitable micrometer, measure the thickness at ten test points. Subtract the thickness of the metal to determine the thickness of the film. Divide the breakdown voltage by the film thickness and record as the dielectric strength.

NEMA Standard 5-27-1987.

5.5.4 Required Report

The following shall be reported:

1. Varnish,
2. Substrate type and thickness,
3. Cure time and temperature,
4. Conditioning method,
5. Average film thickness,
6. Average dielectric strength.

NEMA Standard 5-27-1987.

Copyright National Electrical Manufacturers Association
Provided by IHS under license with NEMA
No reproduction or networking permitted without license from IHS
Not for Resale

5.6 PERMITTIVITY (DIELECTRIC CONSTANT) AND DISSIPATION FACTOR

5.6.1 General

This method is used to determine the permittivity and dissipation factor of cured varnish.

NEMA Standard 5-27-1987.

5.6.2 Required Apparatus

The following apparatus shall be used:

1. Varnish to be tested,
2. 3.5 inch diameter ointment tin,
3. Forced draft oven,
4. Silver paint or foil for electrodes,
5. Voltage source, capacitance bridge, and electrodes.

NEMA Standard 5-27-1987.

5.6.3 Test Sample Preparation

The test sample preparation shall be as follows:

1. A 3.5 inch diameter ointment tin or equivalent shall be used. It shall be cleaned, then sprayed with a suitable release agent. Use sufficient varnish to produce a cure specimen thickness of approximately 0.030 inches. Solvent varnishes shall be cured slowly to preclude voids.

   Remove cured disk specimen from tin and apply a 2 inch diameter electrode on one side using silver paint or any conformable conductor as an electrode. Electrode to resin disk surface must have intimate contact.
2. If the test electrodes are not fixed with a guard ring, apply a 2.5 inch diameter silver paint electrode to opposite side of resin disk. Larger electrode must extend beyond 2 inch diameter electrode all the way around. Dry silver paint in low temperature (50-75 °C) oven 1 hour or air dry for 4 hours. Care must be taken in applying silver paint so as not to splatter or smear paint to preclude affecting the values measured.

NEMA Standard 5-27-1987.

5.6.4 Required Procedure

The procedure shall be as follows:

1. Measure thickness of the cured resin disk and record this value.
2. Place varnish disk into test fixture. Connect the 2 inch diameter electrode to the measure lead and the 2.5 inch diameter electrode to the high voltage lead.
3. Apply approximately ten volts per mil to test sample.
4. The permittivity and dissipation factor shall be permitted to be determined at any mutually agreed upon temperatures and frequencies.

NEMA Standard 5-27-1987.

5.6.5 Required Report

The following shall be reported:

1. Varnish,
2. Cure time and temperature,
3. Specimen thickness,
4. Dissipation factor at test temperature and frequency,
5. Permittivity at test temperature and frequency.

NEMA Standard 5-27-1987.

Copyright National Electrical Manufacturers Association
Provided by IHS under license with NEMA
No reproduction or networking permitted without license from IHS
Not for Resale

5.7 DISSIPATION FACTOR—VARNISH MAGNET WIRE

5.7.1 General

This method is used to make a comparison of dissipation factor values of varnishes applied over enameled wire. These values are for comparison only and should be referenced to unvarnished enameled wire as well as to other varnishes.

Authorized Engineering Information 5-27-1987.

5.7.2 Required Apparatus

The following apparatus shall be used:

1. Varnish to be tested,
2. Enameled wire, 18 AWG heavy build,
3. Capacitance bridge,
4. Solder pot with Wood's metal,
5. Thermocouple or thermometer.

NEMA Standard 5-27-1987.

5.7.3 Sample Preparation

The test specimen shall consist of a 1 foot length of enameled wire bent at the center around a 0.250 inch to 0.50 inch mandrel. The bent wire shall have a "U" shape. The specimens are varnished after being bent. Strip one end of the specimen for contact with lead wires from the capacitance bridge.

NEMA Standard 5-27-1987.

5.7.4 Required Procedure

The procedure shall be as follows:

1. Prepare three or more specimens for each temperature of interest.
2. Using the thermocouple or thermometer, bring the Wood's metal to temperature. Allow 15 minutes for the metal to stabilize.
3. Dry the specimen for 90 seconds at 150 °C and test within 30 seconds of removing from the oven.
4. Place the specimen to be tested into the Wood's metal bath such that approximately 3 inches of enameled wire are submerged. Connect the leads from the capacitance bridge. Wait one full minute after placing the specimens in the bath before taking a reading.

NEMA Standard 5-27-1987.

5.7.5 Required Report

The following shall be reported:

1. Varnish and the type of magnet wire,
2. Cure conditions,
3. The average of the three or more separate values,
4. Dissipation factor at temperature and frequency.

NEMA Standard 5-27-1987.

Copyright National Electrical Manufacturers Association
Provided by IHS under license with NEMA
No reproduction or networking permitted without license from IHS
Not for Resale

5.8 FLASH POINT

5.8.1 General

This method is used to determine the temperature at which the vapors of a varnish will ignite when exposed to an ignition source.

NEMA Standard 5-27-1987.

5.8.2 Required Apparatus

The following apparatus shall be used:

1. Varnish to be tested,
2. The apparatus shall be as prescribed in the appropriate ASTM method listed in 5.8.4.

NEMA Standard 5-27-1987.

5.8.3 Sample Preparation

The specimens shall be as prescribed in the appropriate ASTM test method listed in 5.8.4.

NEMA Standard 5-27-1987.

5.8.4 Required Procedure

Determine the flash point according to ASTM method ASTM D56, ASTM D93, or ASTM D3278 depending on viscosity type of material and anticipated flash point.

5.8.5 Required Report

The following shall be reported:

1. Varnish,
2. Method used,
3. Flash point (Centigrade and Fahrenheit).

NEMA Standard 5-27-1987.

Copyright National Electrical Manufacturers Association
Provided by IHS under license with NEMA
No reproduction or networking permitted without license from IHS
Not for Resale

5.9 REFRIGERANT RESISTANCE/EXTRACTIBLES

5.9.1 General

The method is used to determine the amount of extracted residue from varnished magnet wire which has been exposed to a Refrigerant 22 environment.

NEMA Standard 5-27-1987.

5.9.2 Required Apparatus

The following apparatus shall be used:

1. Varnish to be tested,
2. Enameled wire, 18 AWG heavy build (MW 73),
3. Parr Bomb, or equivalent with siphon cup and heating mantle,
4. Refrigerant 113,
5. Refrigerant 22,
6. Helical coils (see 5.1.4),
7. Analytical balance,
8. Scale,
9. Tongs.

NEMA Standard 5-27-1987.

5.9.3 Test Sample Preparation

The test sample preparation shall be as follows:

1. Wind five standard helical coils of MW 73.
2. Wash coils with Refrigerant 113 and bake 15 minutes at 150°C.

   IMPORTANT: Do not touch coils with hands after this.

3. Weigh coils as one group. The 5 coils give a total weight called WEIGHT OF COILS.
4. Single dip coils and cure per manufacturer's recommendations.
5. Weigh coils again. Record this weight as WEIGHT OF COILS AND VARNISH.
6. Subtract WEIGHT OF COILS from WEIGHT OF COILS WITH VARNISH to get DIFFERENCE (1).

NEMA Standard 5-27-1987.

5.9.4 Required Procedure

The refrigerant cycling shall be as follows:

1. Without touching with hands, place the varnished coils in siphon cup.
2. Hang siphon cup in upper assembly.
3. Place upper assembly on top of bomb and assemble.
4. Weigh bomb and charge it with the appropriate amount of Refrigerant 22 to allow cycling to occur.
5. Place bomb in heating assembly.
6. Connect water and drain lines as well as thermocouple.

NEMA Standard 5-27-1987.

CAUTION: The autoclave pressure should be kept at least 60 psi (413.7 kpa) below the critical pressure of the refrigerant used. For example, 680 psi is the critical pressure of R-22.

7. Prior to use, the "over-pressure" control switch should be checked to ensure it is functioning properly.
8. It is recommended that the heating system be equipped with a device designed to deactivate the system when the pressure inside the pressure vessel reaches a prescribed value.

   Also for additional protection, a device designed to deactivate the heating system when the water flow through the condenser coil is interrupted deserves consideration.

   Authorized Engineering Information 5-27-1987.

9. Turn heat on and set at approximately 83°C.
10. When pressure reaches 500 psi turn water on. This point is START TIME.

Copyright National Electrical Manufacturers Association
Provided by IHS under license with NEMA
No reproduction or networking permitted without license from IHS
Not for Resale

11. Adjust water and heat until cycling is between 500 and 580 psi. Also, cycle length shall be between 2.5 and 3.0 minutes.
12. Record the PRESSURE RANGE. The PRESSURE RANGE shall be the lowest pressure and the highest pressure observed during one cycle.
13. The test shall continue until 6 hours after the start time. This is the STOP TIME.
14. At the STOP TIME remove bomb from heating assembly with lines still attached and running.
15. When the bomb cools, place in freezer overnight.
16. Other pressure ranges, cycle times, and temperatures are extremely useful and shall be permitted to be tested in accordance with this test procedure. The test temperatures, pressures, and cycles must be reported.

NEMA Standard 5-27-1987.

5.9.5 Opening the Bomb

The opening of the bomb shall be as follows:

1. Relieve pressure from bomb by opening valve.
2. When pressure is relieved, disassemble bomb and remove upper assembly. Place bottom half on hot plate set at approximately 175 °C.
3. If there is refrigerant in siphon cup, it shall be poured into bomb. Handle cup with tongs, not gloves or hands.
4. Allow refrigerant to boil within ¼ inch of the bottom of the bomb. Roll remaining refrigerant to wash sides of bomb.
5. Pour remaining refrigerant into a preweighed dish. When all refrigerant evaporates from dish, allow it to stand on the hot plate an additional 15 minutes. Remove from hot plate and weigh. This will be the WEIGHT OF DISH AND RESIDUE.
6. Determine DIFFERENCE (2) and percent extractibles.

DIFFERENCE (2) =
WEIGHT OF DISH AND RESIDUE − WEIGHT OF DISH

$$\text{PERCENT EXTRACTIBLES} = \frac{\text{DIFFERENCE (2)}}{\text{DIFFERENCE (1)}} \times 100$$

NEMA Standard 5-27-1987.

5.9.6 Required Report

The following shall be reported:

1. Varnish,
2. Magnet wire type and manufacturer,
3. Test temperature range,
4. Test pressure range,
5. Cycle time,
6. Total length of test time,
7. Percent extractibles.

NEMA Standard 5-27-1987.

Copyright National Electrical Manufacturers Association
Provided by IHS under license with NEMA
No reproduction or networking permitted without license from IHS
Not for Resale

5.10 GEL TIME

5.10.1 General

This method is used to determine the gel time of catalyzed solventless varnish.

NEMA Standard 5-27-1987.

5.10.2 Required Apparatus

The apparatus shall be as follows:

1. Varnish to be tested,
2. Sunshine Gel Tester or equivalent,
3. 18 × 50 mm test tubes.

NEMA Standard 5-27-1987.

5.10.3 Required Procedure

The procedure shall be as follows:

1. Fill the bath with enough heating medium to completely immerse the test specimen of solventless varnish when the test tube is placed in bath. If the heating medium is a non-boiling material at the test temperature, agitation of the medium is necessary for proper heat transfer.
2. If necessary, adjust the bath temperature or put cooling water on the condenser.
3. Weigh from 9.5 to 10.5 grams of varnish into an 18 mm by 150 mm test tube and insert the glass spindle.
4. Place the test tube in the heating medium, start the timer and attach the spindle to the magnetic clamp.
5. When the varnish gels, the spindle will cease rotating and the contacts will meet, setting off the buzzer.

NEMA Standard 5-27-1987.

5.10.4 Required Report

The following shall be reported:

1. Varnish,
2. Test temperature and heating medium,
3. Time to gel,
4. Type and percent of catalyst, if used.

NEMA Standard 5-27-1987.

Copyright National Electrical Manufacturers Association
Provided by IHS under license with NEMA
No reproduction or networking permitted without license from IHS
Not for Resale

5.11 MONOMER CONTENT

5.11.1 General

This method is used to determine the percent of reactive monomer in uncatalyzed solventless varnishes. The monomer must have a volatility of at least 0.1 mm of Hg at 25 °C to be accurately measured by this method.

NEMA Standard 5-27-1987.

5.11.2 Required Apparatus

The following apparatus shall be used:

1. Varnish to be tested,
2. Aluminum weighing dishes (51 mm diameter × 16 mm height),
3. Analytical balance,
4. Forced draft oven,
5. Stoppered weighing bottle,
6. Desiccator,
7. Methyl isobutyl ketone,
8. Thermometer.

NEMA Standard 5-27-1987.

5.11.3 Required Procedure

The procedure shall be as follows:

1. Dry two weighing dishes at 150 °C (± 2 °C) for 30 minutes and then cool to room temperature in a desiccator. Weigh the dishes to the nearest 0.1 mg and return to the desiccator until ready for use.
2. Place a portion of the varnish in a stoppered weighing bottle and weigh to the nearest 0.1 mg. Transfer about 0.25 gm of varnish from the bottle to one of the weighing dishes. Re-weigh the bottle to the nearest 0.1 mg to determine the exact weight of varnish transferred to the weighing dish. Prepare a second sample in the same manner using the second weighing dish.
3. Add 5 ml of methyl isobutyl ketone to each dish and gently swirl the dishes to mix the varnish into the solvent. Take care to avoid any spillage.
4. Place the dishes in 150 °C (± 2 °C) oven for 15 minutes to volatilize the solvent and monomer. Then place the dishes in a desiccator and cool to room temperature.
5. Weigh each dish to the nearest 0.1 mg. Calculate the percent monomer.

$$\text{Percent Monomer} = \frac{\text{Sample weight} - \text{residue weight}}{\text{Sample weight}} \times 100$$

NEMA Standard 5-27-1987.

5.11.5 Required Report

The following shall be reported:

1. Varnish,
2. Average percent monomer.

NEMA Standard 5-27-1987.

Copyright National Electrical Manufacturers Association
Provided by IHS under license with NEMA
No reproduction or networking permitted without license from IHS
Not for Resale

5.12 NONVOLATILE MATTER—SOLVENT VARNISHES

5.12.1 General

This method is used to determine that portion of a solvent varnish that does not volatilize when it is exposed to specified conditions of time and temperature.

NEMA Standard 5-27-1987.

5.12.2 Required Apparatus

The following apparatus shall be used:

1. Varnish to be tested,
2. Aluminum weighing dishes (51 mm diameter × 16 mm height),
3. Analytical balance,
4. Forced draft oven,
5. Desiccator.

NEMA Standard 5-27-1987.

5.12.3 Required Procedure

The procedure shall be as follows:

1. Dry two round weighing dishes by heating for 30 minutes in a 150°C oven and then cooling in a desiccator to room temperature.
2. Weigh the dishes to the nearest 0.1 mg.
3. Weigh about 1.5 gm of varnish in each of the two dishes to the nearest 0.1 mg.
4. Heat the dishes for 3 hours at 135°C in a forced draft oven.
5. Cool the dishes in a desiccator to room temperature, then weigh to the nearest 0.1 mg. Calculate the percent non-volatile matter.

$$\text{Percent Non-Volatile Matter} = \frac{\text{Weight after baking} - \text{weight of dish}}{\text{Original weight} - \text{weight of dish}} \times 100$$

NEMA Standard 5-27-1987.

5.12.4 Required Report

The following shall be reported:

1. Varnish,
2. Percent Non-Volatile matter.

NEMA Standard 5-27-1987.

Copyright National Electrical Manufacturers Association
Provided by IHS under license with NEMA
No reproduction or networking permitted without license from IHS
Not for Resale

5.13 SPECIFIC GRAVITY

5.13.1 General

This method is used to determine the specific gravity of an electrical insulating varnish.

NEMA Standard 5-27-1987.

5.13.2 Required Apparatus

The following apparatus shall be used:

1. Varnish to be tested,
2. Balance,
3. 25 ml Pycnometer,
4. Constant temperature bath.

NEMA Standard 5-27-1987.

5.13.3 Required Procedure

The procedure shall be as follows:

Using a 25 ml minimum capacity pycnometer, determine the specific gravity of the varnish by calculating the ratio of the weight of the sample to an equal volume of distilled water at the same temperature.

A hydrometer shall be permitted to be used to determine specific gravity for non-thixotropic varnishes.

NEMA Standard 5-27-1987.

5.13.4 Required Report

The following shall be reported:

1. Varnish,
2. Specific Gravity,
3. Test temperature.

NEMA Standard 5-27-1987.

Copyright National Electrical Manufacturers Association
Provided by IHS under license with NEMA
No reproduction or networking permitted without license from IHS
Not for Resale

5.14 THERMAL AGING—CURVED ELECTRODE

5.14.1 General

This method is used to determine the temperature index of flexible varnishes applied to glass cloth.

NEMA Standard 5-27-1987.

5.14.2 Required Apparatus

The following apparatus shall be used:

1. Varnish to be tested,
2. Glass Cloth—Type 116,
3. 14 AWG NiChrome or other heat stable wire frames with brass fasteners,
4. Forced draft oven,
5. Voltage source with meter,
6. Curved electrode fixture,
7. Dipping apparatus "Dip Coater" — Fisher Payne or equivalent,
8. Micrometer.

NEMA Standard 5-27-1987.

5.14.3 Required Procedure

The procedure shall be as follows:

1. Prepare 6 inch × 12 inch panels from heat cleaned glass cloth, Type 116 (having a thickness of 0.004 inch with 80 ends and 60 picks per inch). A set of 12 or more specimens for each test temperature shall be required.
2. Attach each panel to a rectangular wire frame (6.5 inch × 12.5 inch) using brass fasteners. The sheets shall hang wrinkle free in the frames.
3. Adjust the consistency of a solvent varnish until the cured varnished cloth has an overall thickness of 0.007 ± 0.0005 inches after being double dipped and cured after each dip in accordance with manufacturer's recommendations.

   The panels shall remain in the varnish until bubbling stops, then withdrawn at a rate of 4 inches per minute, and drained, in the same vertical position as dipped, for 30 minutes. The curing of each coat shall be in accordance with the manufacturer's instructions.

   The second coat shall be permitted to be made in the reverse direction of the first coat.
4. The coated panels are exposed in a vertical position at three or four different aging temperatures. The temperatures selected must have failure time of more than 100 hours at the highest temperature and at least 5000 hours at the lowest temperature. Refer to Table 5-2 for the recommended exposure temperature range and cycles.
5. Periodically, remove one panel at the highest temperature under test and condition for 4 hours at room temperature. Insert the specimen in the curved electrode fixture (Figure 5-4) having a 4 pound dead weight pressure applied to the upper electrode. The electrodes are connected to a dielectric tester which increases voltage from zero at a rate of 500 volts per second until breakdown occurs.
6. When dielectric breakdown voltage drops below 300 volts per mil based upon original sample thickness, the failure hours are calculated by using the last two or more test values to determine when the 300 volts/mil intercept occurred.
7. When testing at all temperatures is completed, the failure hours are plotted as the ordinate on a logarithmic time scale and the reciprocal of the absolute temperature as the abscissa. Calculate the "best-fit" line drawn through points plotted and extrapolate to 25,000 hours to determine the thermal index.

NEMA Standard 5-27-1987.

5.14.4 Required Report

The following shall be reported:

1. Varnish,
2. Temperature index,
3. Correlation Coefficient.

NEMA Standard 5-27-1987.

Copyright National Electrical Manufacturers Association
Provided by IHS under license with NEMA
No reproduction or networking permitted without license from IHS
Not for Resale

Table 5-2
RECOMMENDED EXPOSURE IN DAYS PER CYCLE

EXPOSURE OR AGING TEMPERATURE °C		ESTIMATED TEMPERATURE VALUE, 105	130	155	180	200	220	240
310								1
300								2
290							1	4
280							2	7
270						1	4	14
260						2	7	28
	± 3							
250					1	4	14	49
240					2	7	28	
230					4	14	49	
220				1	7	28		
210				2	14	49		
200			1	4	28			
190			2	7	49			
180		1	4	14				
170		2	7	28				
160		4	14	49				
	± 2							
150		7	28					
140		14	49					
130		28						
120		49						

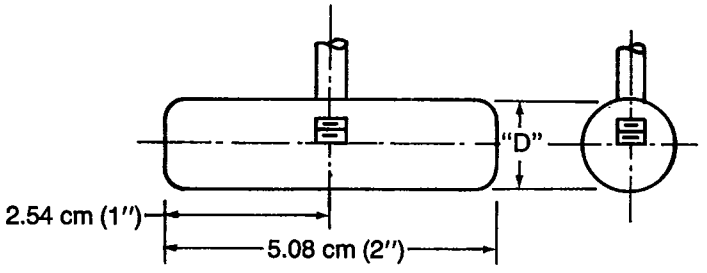

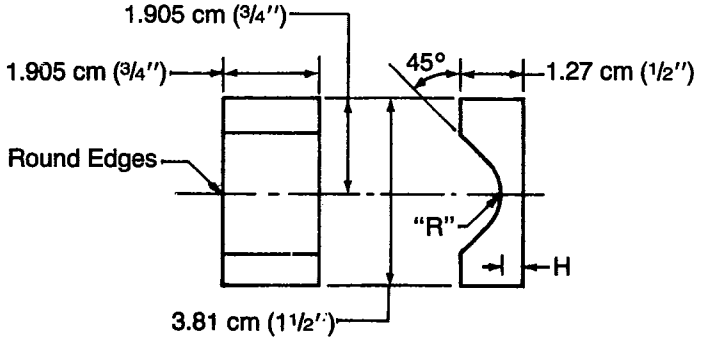

Insulation Thickness		Dimension *R*		Dimension *H*		Dimension *D*	
cm	in.	cm	in.	cm	in.	cm	in.
0.018	0.007	0.455	0.179	0.815	0.321	0.871	0.344

Tolerance for *R* and *D* = 0.003 cm (0.001 in.)
Tolerance for *H* = 0.005 cm (0.002 in.)

Figure 5-4
SINGLE-SHOT CURVED ELECTRODE DETAILS

Copyright National Electrical Manufacturers Association
Provided by IHS under license with NEMA
No reproduction or networking permitted without license from IHS
Not for Resale

5.15 THERMAL AGING—NON-ENAMELLED RECTANGULAR INSULATED MAGNET WIRE

5.15.1 General

This test method is used to determine the temperature index of insulating varnishes on non-enameled rectangular insulated magnet wire.

NEMA Standard 5-27-1987.

5.15.2 Required Apparatus

The following apparatus shall be used:

1. Varnish to be tested,
2. Non-enameled rectangular insulated magnet wire,
3. Dipping apparatus, "Dip Coater," — Fisher Payne or equivalent,
4. Forced draft ovens,
5. Fixture to form specimens,
6. Glass tie cord,
7. Voltage source with meter.

NEMA Standard 5-27-1987

5.15.3 Test Specimen Preparation

The preparation of test specimen shall be as follows:

1. Cut two 10 inch lengths of wire from supply reel for each specimen.
2. Form each length in a fixture shown in Figure 5-5.
3. Make a test specimen by placing the two formed wires together back to back and wrap tightly with glass yarn over the middle 6 inch section. There must be close contact of the two wires.
4. Prepare ten specimens for each test temperature.

NEMA Standard 5-27-1987.

5.15.4 Varnish Impregnation

The varnish impregnation shall be as follows:

1. Adjust solvent varnish to give proper build in accordance with 3.0. Use solventless varnish as supplied.
2. Immerse test specimen in varnish vertically until varnish ceases to bubble. Solventless varnishes shall be applied per manufacturer's recommendations.
3. Withdraw vertically at 4 inches per minute.
4. Allow to drain vertically for 10 minutes.
5. Cure to manufacturer's recommendations.
6. Reverse dip solvent type varnishes and follow Steps 2 through 5.

NEMA Standard 5-27-1987.

5.15.5 Required Procedure

The procedure shall be as follows:

1. Proof test with 1000 volt AC,
2. Select three or four aging temperatures and test cycles from Table 5-2,
3. Begin thermal aging,
4. Select the test voltage from Table 5-3,
5. Periodically remove specimen from ovens and allow to cool to room temperature for 2 hours before testing,
6. Specimen failure occurs when the 15-50 ma circuit breaker is tripped. The failure hours are calculated by using total test time before failure plus 1/2 the time of the last cycle.

NEMA Standard 5-27-1987.

Table 5-3
TEST VOLTAGES

DIFFERENCE BETWEEN BARE AND INSULATED WIRE THICKNESS—Inch	TEST VOLTAGE ALTERNATING, rms
0.0015-0.0020	300
0.0021-0.0025	375
0.0026-0.0030	450
0.0031-0.0035	550
0.0036-0.0040	650
0.0041-0.0045	700
0.0046-0.0050	750
0.0051-0.0055	800
0.0056-0.0060	850
0.0061 and above	1000

5.15.6 Calculations

Calculate the thermal index as follows:

When testing at all temperatures is completed, the average of the failure hours at each temperature is the ordinate on logarithmic time scale, and the reciprocal of the absolute temperature is the abscissa. Calculate the "best-fit" drawn through the three to four points plotted and extrapolated to 20,000 hours to determine the thermal index.

The average is either the logarithmic average of all samples or the median value (see ASTM 2307).

NEMA Standard 5-27-1987.

5.15.7 Required Report

The following shall be reported:

1. Varnish and construction of wire,
2. Temperature index,
3. Correlation Coefficient.

NEMA Standard 5-27-1987.

Copyright National Electrical Manufacturers Association
Provided by IHS under license with NEMA
No reproduction or networking permitted without license from IHS
Not for Resale

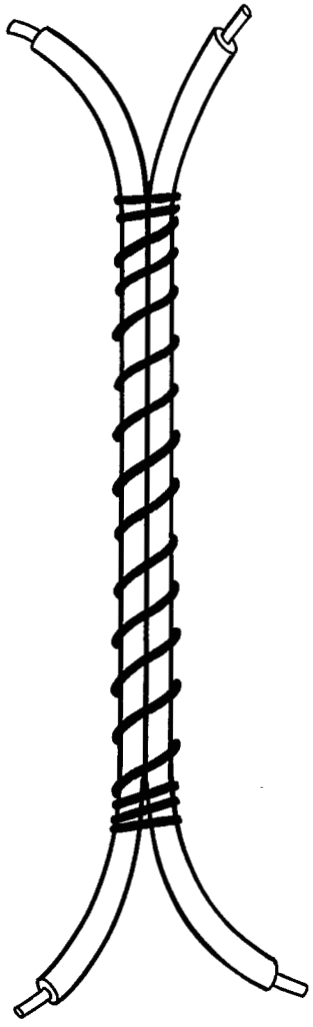

Figure 5-5
TEST SPECIMEN FOR THERMAL AGING SHAPED WIRE

Copyright National Electrical Manufacturers Association
Provided by IHS under license with NEMA
No reproduction or networking permitted without license from IHS
Not for Resale

5.16 THERMAL AGING—HELICAL COIL

5.16.1 General

This method is used to determine the temperature index of solvent or solventless varnishes using a mechanical test.

NEMA Standard 5-27-1987.

5.16.2 Required Apparatus

The following apparatus shall be used:

1. Varnish to be tested,
2. 0.25 inch mandrel,
3. Dipping apparatus, ''Dip Coater'' — Fisher Payne or equivalent,
4. Forced draft ovens,
5. Tensile tester,
6. Test fixture, Figure 5-1,
7. Enameled wire, 18 AWG heavy build.

NEMA Standard 5-27-1987.

5.16.3 Required Procedure

The following procedure shall be used:

1. Coils 3 inches in length are prepared by winding heavy build 18 AWG magnet wire on 0.25 inch mandrel.
2. The coils are dipped in solvent type varnish which has been previously adjusted or solventless varnish as received, in accordance with 3.0. The coils shall be withdrawn from the varnish at a rate of 4 inches per minute, drained for 10 minutes, and then cured according to the manufacturer's recommendation. The coils treated with solvent varnish are then reversed, dipped and baked, using the above procedure.
3. The cured coils are exposed at three or four different aging temperatures. Refer to Table 5-2 for the recommended exposure temperature range and cycles. Periodically, remove sets of coils from the ovens and cool to room temperature. Test according to 5.1.4 step 3 (Bond strength).
4. End of life has occurred when the average breakload falls below 5 pounds. A calculation is made using the last two or more test values to determine the hours at which 5 pound intercept occurred.
5. The temperatures selected must have a failure time of more than 100 hours at the highest temperature and at least 5000 hours at the lowest temperature. The average of the failure hours at each temperature is the ordinate on a logarithmic time scale, and the reciprocal of the absolute temperature is the abscissa. The 'best-fit'' line is drawn through the three to four points plotted and extrapolated to 20,000 hours to determine the thermal index.

NEMA Standard 5-27-1987.

5.16.4 Required Report

The following shall be reported:

1. Varnish and construction of wire,
2. Magnet wire type and manufacturer,
3. Temperature index,
4. Correlation Coefficient.

NEMA Standard 5-27-1987.

Copyright National Electrical Manufacturers Association
Provided by IHS under license with NEMA
No reproduction or networking permitted without license from IHS
Not for Resale

5.17 THERMAL AGING—TWISTED COIL

5.17.1 General

This method is used to determine the temperature index of solventless varnishes using a mechanical test.

NEMA Standard 5-27-1987.

5.17.2 Required Apparatus and/or Material

The following apparatus shall be used:

1. Varnish to be tested,
2. Enameled wire, 28 AWG heavy build,
3. Coil winding jig as shown in Figure 5-2,
4. Coil twister as shown in Figure 5-3,
5. Dipping apparatus, "Dip Coater" — Fisher Payne or equivalent,
6. Forced draft oven,
7. Text fixture (Figure 5-1), and tensile tester.

NEMA Standard 5-27-1987.

5.17.3 Required Specimens

1. Prepare 60 twisted coils for each aging temperature in accordance with procedure in 5.2.4.
2. Dip and cure in accordance with 5.2.5.
3. Establish initial bond strength. This is done by aging a set of 5 twisted coils for 48 hours at the lowest aging temperature to be used in the study. Test in accordance with 5.1.4, step 3.

NEMA Standard 5-27-1987.

5.17.4 Required Procedure

The procedure shall be as follows:

1. Age according to 5.16.3, step 3.

NEMA Standard 5-27-1987.

5.17.5 Calculations

End of life has occurred when the average breakload falls below 50 °C of the initial bond strength.

NEMA Standard 5-27-1987.

This value is being validated by a round robin test. A calculation using test values is being developed.

Authorized Engineering Information 5-27-1987.

5.17.6 Required Report

The following shall be reported:

1. Varnish and construction of wire,
2. Magnet wire type and manufacturer,
3. Temperature index,
4. Correlation Coefficient.

NEMA Standard 5-27-1987.

Copyright National Electrical Manufacturers Association
Provided by IHS under license with NEMA
No reproduction or networking permitted without license from IHS

Not for Resale

5.18 THERMAL AGING—TWISTED PAIRS

5.18.1 General

This method is used to determine the temperature index of a varnish/magnet wire combination by an electrical test.

NEMA Standard 5-27-1987

5.18.2 Required Apparatus

The following apparatus shall be used:

1. Varnish to be tested,
2. Enameled wire, 18 AWG heavy build,
3. Apparatus necessary to form the twisted pairs,
4. Dipping apparatus, "Dip Coater" — Fisher Payne or equivalent,
5. Forced draft oven,
6. Voltage source and meter.

NEMA Standard 5-27-1987.

5.18.3 Required Procedure

The procedure shall be as follows:

1. Prepare 20 twisted pairs of 18 AWG heavy build enameled wire for each test temperature.
2. Varnish ten of the twisted pairs per each test temperature. The specimens are dipped in a solventless varnish or in solvent type varnish which has been previously adjusted in accordance with 3.0. They shall be withdrawn from the varnish at a rate of 4 inches per minute then baked according to the manufacturer's recommendations.

   Specimens with solvent varnishes are then reversed dipped and baked using the above procedures.

   Carefully snip the ends of one pair of legs which will then become the electrical contacts.

   Proof test each twisted pair per Table 5-4.
3. Age ten varnished and ten unvarnished twisted pairs at each of three or four test temperatures. The temperatures selected must have a failure time of more than 100 hours at the highest temperature and at least 5000 hours at the lowest temperature.
4. Periodically remove the specimens from the ovens, allow to cool to room temperature, and proof test.

The recommended times between tests are shown in Table 5-2.

Specimen failure occurs when the 15-50 ma circuit breaker is tripped. The failure hours are calculated by using total test time before failure plus ½ the time of the last cycle.

NEMA Standard 5-27-1987.

5.18.4 Calculations

The calculation of the thermal index shall be as follows:

The average of the failure hours at each temperature is the ordinate on a logarithmic time scale, and the reciprocal of the absolute temperature is the abscissa. The "best-fit" line is drawn through the points plotted and extrapolated to 20,000 hours to determine the thermal index.

The average is either the logarithmic average of all samples or the median value (see ASTM 2307).

NEMA Standard 5-27-1987.

5.18.5 Required Report

The following shall be reported:

1. Varnish and construction of wire,
2. Magnet wire type and manufacturer,
3. Temperature index,
4. Correlation Coefficient.

NEMA Standard 5-27-1987.

Table 5-4
PROOF VOLTAGE TEST

DIFFERENCE BETWEEN MINIMAL BARE AND INSULATED WIRE DIAMETERS		TEST VOLTAGE V
mm	in	
0.015 to 0.024	0.0005 to 0.0009	300
0.025 to 0.035	0.0010 to 0.0014	400
0.036 to 0.050	0.0015 to 0.0020	500
0.051 to 0.007	0.0021 to 0.0027	700
0.071 to 0.090	0.0028 to 0.0035	1000
0.091 to 0.130	0.0036 to 0.0051	1200

Test voltages are rms values at a nominal frequency of 50 or 60 Hz.

Copyright National Electrical Manufacturers Association
Provided by IHS under license with NEMA
No reproduction or networking permitted without license from IHS
Not for Resale

5.19 VARNISH COMPATIBILITY

5.19.1 General

This method is intended to show compatibility of two different varnishes. It is not intended to show long-term performance characteristics.

Authorized Engineering Information 5-27-1987.

5.19.2 Required Apparatus

The following apparatus shall be used:

1. Varnish to be tested,
2. Analytical balance,
3. Forced draft oven,
4. Sunshine gel tester,
5. Gel time tester tubes,
6. Beakers,
7. Aluminum weighing dishes.

NEMA Standard 5-27-1987.

5.19.3 Required Procedure

The procedure shall be as follows:

1. All varnishes shall be used as received.
2. The compatibility of two varnishes is determined by making five mixes of the two varnishes in the following weight ratios: 9:1, 3:1, 1:1, 1:3, and 1:9. The liquid mixtures shall be thoroughly stirred and then checked for curdling, precipitation, clarity, and separation. If not homogeneous, stop test and report observations.
3. If the mixtures are homogeneous, place 20 grams of each in five separate weighing dishes and cure at the recommended temperature and time. Remove from the oven and visually check for cure. Cool to room temperature and check samples for clarity.

NEMA Standard 5-27-1987.

4. Gel time of solventless varnish mixtures should be between the gel times of the individual varnishes.

Authorized Engineering Information 5-27-1987.

5.19.4 Required Report

The following shall be reported:

1. Combinations of varnishes tested,
2. Observation of clarity, curdling, precipitation, clarity, and separation,
3. Gel times,
4. Visual observations of degrees of cure.

NEMA Standard 5-27-1987.

Copyright National Electrical Manufacturers Association
Provided by IHS under license with NEMA
No reproduction or networking permitted without license from IHS
Not for Resale

5.20 VISCOSITY, BROOKFIELD

5.20.1 General

The method is used to determine the viscosity and the rheological properties of varnishes.

NEMA Standard 5-27-1987.

5.20.2 Required Apparatus

The following apparatus shall be used:

1. Brookfield Viscometer,
2. Round quart metal can,
3. Water bath,
4. Thermometer,
5. Mixer,
6. Spatula, ½ inch wide blade.

NEMA Standard 5-27-1987.

5.20.3 Required Procedure—Non-Thixotropic Varnishes

The procedure for non-thixotropic varnishes shall be as follows:

1. Clean the apparatus,
2. Pour the varnish into a clean container until it is within approximately 1 inch of the top.

NEMA Standard 5-27-1987.

A one quart metal can was chosen for uniformity. Other sizes can give different results.

Authorized Engineering Information 5-27-1987.

3. Using the water bath, adjust the temperature of the sample to 25 °C unless otherwise specified. Immerse the spindle in the sample and adjust the speed of spindle to obtain a reading in the middle 50 percent of the scale. If spindle size or motor speed are not specified, select the suitable combination.

NEMA Standard 5-27-1987.

5.20.5 Required Report

The following shall be reported:

1. Identification of the varnish,
2. Viscosity in centipoise (cps) and the temperature,
3. Model of viscometer, spindle size, and speed used.

NEMA Standard 5-27-1987.

5.20.6 Required Procedure—Thixotropic Varnishes

The procedure for thixotropic varnishes shall be as follows:

1. Clean the apparatus,
2. Pour the varnish into a clean container until it is within approximately 1 inch of the top,
3. De-aerate the varnish by using a vacuum, if necessary,
4. Using the water bath adjust the temperature of the sample to 25 °C unless otherwise specified,
5. Gently hand mix the varnish with spatuala for 30 seconds,
6. Allow the varnish to sit for 90 minutes in a sealed can,
7. Set the viscometer on one or two RPM depending on the model,
8. Gently insert the spindle without trapping air,
9. Start the test. Record the reading on the dial after a minimum of 10 rotations,
10. Increase the speed to 10 or 20 RPM and record the reading after a minimum of 10 rotations at the higher speed,
11. Calculate the thixotropic index (T.I.)

$$\text{T.I.} = \frac{\text{Viscosity at the lower RPM rate}}{\text{Viscosity at the higher RPM rate}}$$

NEMA Standard 5-27-1987.

In this method, shear rates can be correlated to spindle RPM.

Authorized Engineering Information 5-27-1987.

5.20.7 Required Report

The following shall be reported:

1. Varnish,
2. Model of the viscometer and the spindle size used,
3. The temperature,
4. The viscosity and speed at each measurement,
5. Thixotropic index.

NEMA Standard 5-27-1987.

Copyright National Electrical Manufacturers Association
Provided by IHS under license with NEMA
No reproduction or networking permitted without license from IHS
Not for Resale

ELECTRICAL INSULATING RESINS SECTION
OF THE
NATIONAL ELECTRICAL MANUFACTURERS ASSOCIATION

MEMBER COMPANIES

John C. Dolph Company
Monmouth Junction, NJ 08852

Freeman Chemical Corporation
Port Washington, WI 53074

General Electric Company
Schenectady, NY 12306

The P.D. George Company
St. Louis, MO 63147

Ripley Resin Engineering Co., Inc.
Addison, IL 60101

Schenectady Chemicals Inc.
Schenectady, NY 12301

Sterling Division of Reichhold Chemicals, Inc.
Sewickly, PA 15143

3M
St. Paul, MN 55144

Westinghouse Electric Corporation
Manor, PA 15665

Copyright National Electrical Manufacturers Association
Provided by IHS under license with NEMA
No reproduction or networking permitted without license from IHS
Not for Resale

NEMA STANDARDIZATION

The purpose of NEMA Standards, their classification and status are set forth in certain clauses of the NEMA Bylaws, which are quoted below:

Purpose of Standards

National Electrical Manufacturers Association Standards are adopted in the public interest and are designed to eliminate misunderstandings between the manufacturer and the purchaser and to assist the purchaser in selecting and obtaining the proper product for its particular need. Existence of a National Electrical Manufacturers Association Standard does not in any respect preclude any member or nonmember from manufacturing or selling products not conforming to the standard.

(Bylaw—Art. V, Sec. 1)

Definition of a Standard

A standard of the National Electrical Manufacturers Association defines a product, process or procedure with reference to one or more of the following: nomenclature, composition, construction, dimensions, tolerances, safety, operating characteristics, performance, rating, testing, and the service for which they are designed.

(Bylaw—Art. V, Sec. 2, Subsection A)

Dimensions

Where dimensions are given for interchangeability purposes, alternate dimensions satisfying the other provisions of the standards publication may be capable of otherwise equivalent performance.

(NEMA Policy Memorandum 84-2, dated June 7, 1984)

Classes of Standards

National Electrical Manufacturers Association Standards are of two classes:

1. NEMA Standard, which relates to a product commercially standardized and subject to repetitive manufacture, which standard has been approved by at least 90 percent of the members of the Subdivision eligible to vote thereon;
2. Suggested Standard for Future Design, which may not have been regularly applied to a commercial product, but which suggests a sound engineering approach to future development, which standard has been approved by at least two-thirds of the members of the Subdivision eligible to vote thereon.

(Bylaw—Art. V, Sec. 6, 1st Sentence)

Official Standards Proposal

An Official Standards Proposal is an official draft of a proposed standard which is formally recommended to an outside organization(s) for consideration, comment and/or approval.

(Bylaw—Art. V, Sec. 4, Subsection A)

Identification of Status

Standards in NEMA Standards Publications are identified in the foreword or following each standard as "NEMA Standard" or "Suggested Standard for Future Design." These indicate the status of the standard. These words are followed by a date which indicates when the standard was adopted in its present form by the Association.

The material identified as "Authorized Engineering Information" and "Official Standards Proposal" is designated similarly.

Copyright National Electrical Manufacturers Association
Provided by IHS under license with NEMA
No reproduction or networking permitted without license from IHS
Not for Resale