DICOM

Part 5

Data Structures and Encoding

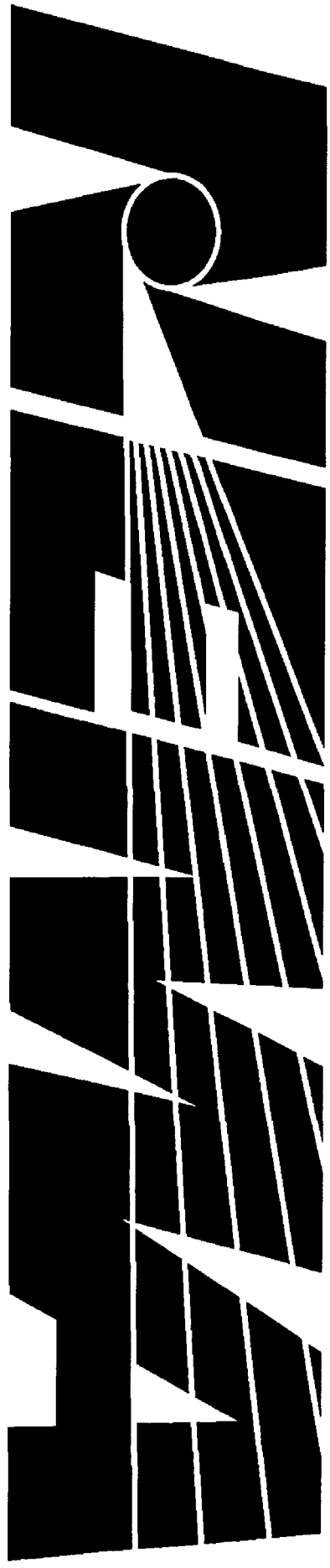

DICOM®
Digital Imaging and Communications in Medicine

Copyright National Electrical Manufacturers Association
Provided by IHS under license with NEMA
No reproduction or networking permitted without license from IHS
Not for Resale

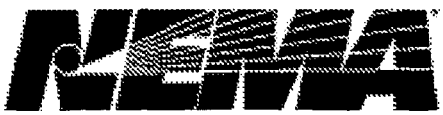

NATIONAL ELECTRICAL MANUAFACTURERS ASSOCIATION
1300 NORTH 17TH STREET, SUITE 1847, ROSSLYN, VIRGINIA 22209

Copyright National Electrical Manufacturers Association
Provided by IHS under license with NEMA
No reproduction or networking permitted without license from IHS
Not for Resale

PS 3.5-2001

Digital Imaging and Communications in Medicine (DICOM)

Part 5: Data Structures and Encoding

Published by

National Electrical Manufacturers Association
1300 N. 17th Street
Rosslyn, Virginia 22209 USA

© Copyright 2001 by the National Electrical Manufacturers Association. All rights including translation into other languages, reserved under the Universal Copyright Convention, the Berne Convention or the Protection of Literacy and Artistic Works, and the International and Pan American Copyright Conventions.

- Standard -

Copyright National Electrical Manufacturers Association
Provided by IHS under license with NEMA
No reproduction or networking permitted without license from IHS

Not for Resale

NOTICE AND DISCLAIMER

The information in this publication was considered technically sound by the consensus of persons engaged in the development and approval of the document at the time it was developed. Consensus does not necessarily mean that there is unanimous agreement among every person participating in the development of this document.

The National Electrical Manufacturers Association (NEMA) standards and guideline publications, of which the document contained herein is one, are developed through a voluntary consensus standards development process. This process brings together volunteers and/or seeks out the views of persons who have an interest in the topic covered by this publication. While NEMA administers the process and establishes rules to promote fairness in the development of consensus, it does not write the document and it does not independently test, evaluate, or verify the accuracy or completeness of any information or the soundness of any judgments contained in its standards and guideline publications.

NEMA disclaims liability for any personal injury, property, or other damages of any nature whatsoever, whether special, indirect, consequential, or compensatory, directly or indirectly resulting from the publication, use of, application, or reliance on this document. NEMA disclaims and makes no guaranty or warranty, expressed or implied, as to the accuracy or completeness of any information published herein, and disclaims and makes no warranty that the information in this document will fulfill any of your particular purposes or needs. NEMA does not undertake to guarantee the performance of any individual manufacturer or seller's products or services by virtue of this standard or guide.

In publishing and making this document available, NEMA is not undertaking to render professional or other services for or on behalf of any person or entity, nor is NEMA undertaking to perform any duty owed by any person or entity to someone else. Anyone using this document should rely on his or her own independent judgment or, as appropriate, seek the advice of a competent professional in determining the exercise of reasonable care in any given circumstances. Information and other standards on the topic covered by this publication may be available from other sources, which the user may wish to consult for additional views or information not covered by this publication.

NEMA has no power, nor does it undertake to police or enforce compliance with the contents of this document. NEMA does not certify, test, or inspect products, designs, or installations for safety or health purposes. Any certification or other statement of compliance with any health or safety–related information in this document shall not be attributable to NEMA and is solely the responsibility of the certifier or maker of the statement.

Copyright National Electrical Manufacturers Association
Provided by IHS under license with NEMA
No reproduction or networking permitted without license from IHS
Not for Resale

CONTENTS

CONTENTS i
FOREWORD iv
Section 1 Scope and Field of Application 1
Section 2 Normative references 2
Section 3 Definitions 5
3.1 REFERENCE MODEL DEFINITIONS 5
3.2 ACSE SERVICE DEFINITIONS 5
3.3 PRESENTATION SERVICE DEFINITIONS 5
3.4 OBJECT IDENTIFICATION DEFINITIONS 5
3.5 DICOM INTRODUCTION AND OVERVIEW DEFINITIONS 5
3.6 DICOM CONFORMANCE DEFINITIONS 5
3.7 DICOM INFORMATION OBJECT DEFINITIONS 5
3.8 DICOM SERVICE CLASS SPECIFICATIONS DEFINITIONS 6
3.9 DICOM NETWORK COMMUNICATION SUPPORT FOR MESSAGE EXCHANGE DEFINITIONS 6
3.10 DICOM DATA STRUCTURES AND ENCODING DEFINITIONS 6
3.11 CHARACTER HANDLING DEFINITIONS 8
Section 4 Symbols and abbreviations 9
Section 5 Conventions 10
Section 6 Value Encoding 10
6.1 SUPPORT OF CHARACTER REPERTOIRES 10
6.1.1 .... REPRESENTATION OF ENCODED CHARACTER VALUES 10
6.1.2 .... GRAPHIC CHARACTERS 11
6.1.2.1 Default character repertoire 11
6.1.2.2 Extension or replacement of the default character repertoire 11
6.1.2.3 Encoding of character repertoires 11
6.1.2.4 Code Extension Techniques 13
6.1.2.5 Usage of Code Extension 13
6.1.2.5.1 Assumed Initial States 13
6.1.2.5.2 Restrictions for Code Extension 13
6.1.2.5.3 Requirements 13
6.1.2.5.4 Levels of Implementation and Initial Designation 14
6.1.3 .... CONTROL CHARACTERS 14
6.2 VALUE REPRESENTATION (VR) 15
6.2.1 Ideographic and phonetic characters in Data Elements with VR of PN 22
6.2.2 Unknown (UN) Value Representation 23
6.3 ENUMERATED VALUES AND DEFINED TERMS 23
6.4 VALUE MULTIPLICITY (VM) AND DELIMITATION 23
Section 7 The Data Set 25
7.1 DATA ELEMENTS 25
7.1.1 .... DATA ELEMENT FIELDS 26
7.1.2 .... DATA ELEMENT STRUCTURE WITH EXPLICIT VR 27

Copyright National Electrical Manufacturers Association
Provided by IHS under license with NEMA
No reproduction or networking permitted without license from IHS
Not for Resale

7.1.3.... DATA ELEMENT STRUCTURE WITH IMPLICIT VR 28
7.2 GROUP LENGTH 28
7.3 BIG ENDIAN VERSUS LITTLE ENDIAN BYTE ORDERING 28
7.4 DATA ELEMENT TYPE 29
7.4.1.... TYPE 1 REQUIRED DATA ELEMENTS 29
7.4.2.... TYPE 1C CONDITIONAL DATA ELEMENTS 30
7.4.3.... TYPE 2 REQUIRED DATA ELEMENTS 30
7.4.4.... TYPE 2C CONDITIONAL DATA ELEMENTS 30
7.4.5.... TYPE 3 OPTIONAL DATA ELEMENTS 30
7.5 NESTING OF DATA SETS 30
7.5.1.... ITEM ENCODING RULES 31
7.5.2.... DELIMITATION OF THE SEQUENCE OF ITEMS 31
7.5.3 SEQUENCE INHERITANCE 33
7.6 REPEATING GROUPS 33
7.7 RETIRED DATA ELEMENTS 34
7.8 PRIVATE DATA ELEMENTS 34
7.8.1.... PRIVATE DATA ELEMENT TAGS 34
7.8.2.... VR RULES FOR PRIVATE ELEMENTS 35
Section 8 Encoding of Pixel, Overlay and Waveform Data 36
8.1 PIXEL AND OVERLAY DATA, AND RELATED DATA ELEMENTS 36
8.1.1.... Pixel data encoding of related data elements 36
8.1.2.... Overlay data encoding of related data elements 37
8.2 NATIVE OR ENCAPSULATED FORMAT ENCODING 37
8.2.1.... JPEG IMAGE COMPRESSION 38
8.2.2.... Run Length Encoding Compression 39
8.2.3.... JPEG-LS IMAGE COMPRESSION 40
8.3 WAVEFORM DATA AND RELATED DATA ELEMENTS 40
Section 9 Unique Identifiers (UIDs) 41
9.1 UID ENCODING RULES 41
9.2 UNIQUE IDENTIFIER REGISTRATION 42
9.2.1.... DICOM DEFINED AND REGISTERED UNIQUE IDENTIFIERS 42
9.2.2.... PRIVATELY DEFINED UNIQUE IDENTIFIERS 42
Section 10 Transfer Syntax 43
10.1 DICOM DEFAULT TRANSFER SYNTAX 43
10.2 TRANSFER SYNTAX FOR A DICOM DEFAULT OF LOSSLESS JPEG COMPRESSION ... 43
10.3 TRANSFER SYNTAXES FOR A DICOM DEFAULTS OF LOSSY JPEG COMPRESSION ... 44
10.4 TRANSFER SYNTAX FOR DICOM RLE COMPRESSION 44
10.5 TRANSFER SYNTAX FOR A DICOM DEFAULT OF LOSSLESS AND LOSSY (NEAR-LOSSLESS) JPEG-LS COMPRESSION 44
Annex A (Normative) Transfer Syntax Specifications 45
A.1 DICOM IMPLICIT VR LITTLE ENDIAN TRANSFER SYNTAX 45
A.2 DICOM LITTLE ENDIAN TRANSFER SYNTAX (EXPLICIT VR) 46
A.3 DICOM BIG ENDIAN TRANSFER SYNTAX (EXPLICIT VR) 47
A.4 TRANSFER SYNTAXES FOR ENCAPSULATION OF ENCODED PIXEL DATA 49
A.4.1 JPEG IMAGE COMPRESSION 53
A.4.2 RLE COMPRESSION 54
A.4.3 JPEG-LS IMAGE COMPRESSION 54

Copyright National Electrical Manufacturers Association
Provided by IHS under license with NEMA
No reproduction or networking permitted without license from IHS
Not for Resale

A.5 DICOM DEFLATED LITTLE ENDIAN TRANSFER SYNTAX (EXPLICIT VR) 55
Annex B (Informative) Creating a privately defined unique identifier 56
Annex C (Informative) DICOM unique identifier registration process 57
Annex D (Informative) Examples of various pixel data and overlay encoding schemes 60
D.1 DETAILED EXAMPLE OF PIXEL DATA ENCODING 60
D.2 VARIOUS ADDITIONAL EXAMPLES OF PIXEL AND OVERLAY DATA CELLS 67
Annex E (Normative) DICOM default character repertoire 69
Annex F (Informative) Encapsulated images as part of a DICOM message 70
F.1 ENCAPSULATED JPEG ENCODED IMAGES 70
F.2 ENCAPSULATED JPEG-LS ENCODED IMAGES 74
Annex G (Normative) Encapsulated RLE Compressed Images 77
G.1 SUMMARY 77
G.2 BYTE SEGMENTS 77
G.3 THE RLE ALGORITHM 77
G.3.1 The RLE encoder 77
G.3.2 ... The RLE decoder 78
G.4 ORGANIZATION OF RLE COMPRESSED FRAME 78
G.5 RLE HEADER FORMAT 78
G.6 EXAMPLE OF ELEMENTS FOR AN ENCODED YC_BC_R RLE THREE-FRAME IMAGE WITH BASIC OFFSET TABLE 80
Annex H (Informative) Character sets and person name value representation in the Japanese Language 82
H.1 CHARACTER SETS FOR THE JAPANESE LANGUAGE 82
H.1.1 JIS X 0201 82
H.1.2 JIS X 0208 82
H.1.3 JIS X 0212 82
H.2 INTERNET PRACTICE 83
H.3 EXAMPLE OF PERSON NAME VALUE REPRESENTATION IN THE JAPANESE LANGUAGE 84
H.3.1 Example 1: Value 1 of Attribute Specific Character Set (0008,0005) is not present. 84
H.3.2 Example 2: Value 1 of Attribute Specific Character Set (0008,0005) is ISO 2022 IR 13 85
Annex I (Informative) Character sets and person name value representation In the Korean Language 87
I.1 CHARACTER SETS FOR THE KOREAN LANGUAGE IN DICOM 87
I.2 EXAMPLE OF PERSON NAME VALUE REPRESENTATION IN THE KOREAN LANGUAGE 87
I.3 EXAMPLE OF LONG TEXT VALUE REPRESENTATION IN THE KOREAN LANGUAGE WITHOUT EXPLICIT ESCAPE SEQUENCES BETWEEN CHARACTER SETS 88
Annex J (Informative) Index to Data Element Tags and UIDs 90

Copyright National Electrical Manufacturers Association
Provided by IHS under license with NEMA
No reproduction or networking permitted without license from IHS
Not for Resale

FOREWORD

The American College of Radiology (ACR) and the National Electrical Manufacturers Association (NEMA) formed a joint committee to develop a standard for Digital Imaging and Communications in Medicine (DICOM). This DICOM Standard was developed according to the NEMA procedures.

This standard is developed in liaison with other standardization organizations including CEN TC251 in Europe and JIRA in Japan, with review also by other organizations including IEEE, HL7 and ANSI in the USA.

The DICOM Standard is structured as a multi-part document using the guidelines established in the following document:

-ISO/IEC Directives, 1989 Part 3: Drafting and Presentation of International Standards.

This document is one part of the DICOM Standard which consists of the following parts:

PS 3.1: Introduction and Overview

PS 3.2: Conformance

PS 3.3: Information Object Definitions

PS 3.4: Service Class Specifications

PS 3.5: Data Structures and Encoding

PS 3.6: Data Dictionary

PS 3.7: Message Exchange

PS 3.8: Network Communication Support for Message Exchange

PS 3.9: Point-to-Point Communication Support for Message Exchange

PS 3.10: Media Storage and File Format

PS 3.11: Media Storage Application Profiles

PS 3.12: Media Format and Physical Media for Media Interchange

PS 3.13: Print Management and Point-to-Point Communication Support

PS 3.14: Grayscale Standard Display Function

PS 3.15: Security Profiles

PS 3.16: Content Mapping Resource

These parts are related but independent documents. Their development level and approval status may differ. Additional parts may be added to this multi-part standard. Part PS 3.1 should be used as the base reference for the current parts of this Standard.

Copyright National Electrical Manufacturers Association
Provided by IHS under license with NEMA
No reproduction or networking permitted without license from IHS
Not for Resale

Section 1 Scope and Field of Application

This part of the DICOM Standard is Part 5 (PS 3.5) of a multi-part standard produced to facilitate the interchange of information between digital imaging computer systems in medical environments. This interchange will enhance diagnostic imaging and potentially other clinical applications. The multi-part DICOM Standard covers the protocols and data that shall be supplied to achieve this interchange of information.

In this part of the standard the structure and encoding of the Data Set is specified. In the context of Application Entities communicating over a network (see PS 3.7), a Data Set is that portion of a DICOM Message that conveys information about real world objects being managed over the network. A Data Set may have other contexts in other applications of this standard; e.g., in media exchange the Data Set translates to file content structure.

This part of the DICOM Standard specifies:

a) the encoding of Values
b) the structure and usage of a Data Set
c) Data Element usage and relationships to other elements
d) the construction and usage of Nested Data Sets
e) the construction and usage of Data Sets containing Pixel Data
f) how to uniquely identify information
g) the specification of the standard DICOM Transfer Syntaxes

This part of the DICOM Standard does not specify:

a) the structure and syntax of a message (this is specified in PS 3.7)
b) the structure and usage of a command set (this is specified in PS 3.7)
c) how an application service functions or is classified (this is specified in PS 3.3 and PS 3.4)
d) how data sets relate to network communication, media storage, or other services

Copyright National Electrical Manufacturers Association
Provided by IHS under license with NEMA
No reproduction or networking permitted without license from IHS
Not for Resale

Section 2 Normative references

The following standards contain provisions that, through references in this text, constitute provisions of this standard. At the time of publication, the editions indicated were valid. All standards are subject to revision, and parties to agreements based on this standard are encouraged to investigate the possibilities of applying the most recent editions of the standards indicated below.

ANSI MSDS	Message Standard Developers Subcommittee PROPOSAL on Data Types
ANSI X3.4 - 1986	Coded Character Set - 7-Bit American National Standard Code for Information Interchange
ANSI X3.9 - 1978	Programming Language FORTRAN
ASTM E-1238-91	Standard Specification for Transferring Clinical Observations Between Independent Computer Systems; Draft Revision 4.2.1
IEEE 754:1985	32-bit and 64-bit Floating Point Number Representations
ISO 646:1990	Information Processing—ISO 7-bit coded character set for information interchange
ISO 2375:1986	Data Processing—Procedure for the registration of escape sequences
ISO 6429:1990	Information Processing—Control functions for 7-bit and 8-bit coded character sets
ISO 6523:1984	Data interchange—Structures for identification of organizations
ISO 7498:1984	Information processing systems—Open System Interconnection—Basic Reference Model
ISO 7498-4:1989	Information processing systems—Open Systems Interconnection—Part 4: Management Framework
ISO 8649:1988	Information processing systems—Open Systems Interconnection—Service definition for the Association Control Service Element (ACSE)
ISO 8822:1988	Information processing systems -- Open Systems Interconnection - Connection oriented presentation service definition
ISO/IEC 8824:1990	Information processing systems—Open Systems Interconnection—Specification of Abstract Syntax Notation One (ASN.1)
ISO 8859-1:1987	Information processing—8-bit single-byte coded graphic character sets— Part 1: Latin alphabet No. 1
ISO 8859-2:1987	Information processing—8-bit single-byte coded graphic character sets— Part 2: Latin alphabet No. 2

Copyright National Electrical Manufacturers Association
Provided by IHS under license with NEMA
No reproduction or networking permitted without license from IHS
Not for Resale

ISO 8859-3:1988	Information processing—8-bit single-byte coded graphic character sets— Part 3: Latin alphabet No. 3
ISO 8859-4:1988	Information processing—8-bit single-byte coded graphic character sets— Part 4: Latin alphabet No. 4
ISO 8859-5:1988	Information processing—8-bit single-byte coded graphic character sets— Part 5: Latin/Cyrillic alphabet
ISO 8859-6:1987	Information processing—8-bit single-byte coded graphic character sets— Part 6: Latin/Arabic alphabet
ISO 8859-7:1987	Information processing—8-bit single-byte coded graphic character sets— Part 7: Latin/Greek alphabet
ISO 8859-8:1988	Information processing—8-bit single-byte coded graphic character sets— Part 8: Latin/Hebrew alphabet
ISO 8859-9:1989	Information processing—8-bit single-byte coded graphic character sets— Part 9: Latin alphabet No. 5
ISO/IS 10918-1	JPEG Standard for digital compression and encoding of continuous-tone still images. Part 1—Requirements and implementation guidelines
ISO/IS 10918-2	JPEG Standard for digital compression and encoding of continuous-tone still images. Part 2—Testing
ISO/IS 14495-1	Lossless and near-lossless coding of continuous tone still images (JPEG-LS)
ENV 41 503:1990	Information systems interconnection—European graphic character repertoires and their coding
ENV 41 508:1990	Information systems interconnection—East European graphic character repertoires and their coding
ISO 9834-3:1990	Part 3: Procedures for the Assignment of Object Identifier Component Values for Joint ISO-CCITT Use ISO/IEC Directives, 1989 Part 3 - Drafting and presentation of International Standards
ISO/IEC 2022:1994	Information technology - Character code structure and extension techniques
JIS X 0201-1976	Code for Information Interchange
JIS X 0208-1990	Code for the Japanese Graphic Character set for information interchange
JIS X 0212-1990	Code of the supplementary Japanese Graphic Character set for information interchange
KS X 1001-1997	Code for Information Interchange (Hangul and Hanja)
RFC 1951	DEFLATE Compressed Data Format Specification version 1.3

Copyright National Electrical Manufacturers Association
Provided by IHS under license with NEMA
No reproduction or networking permitted without license from IHS
Not for Resale

Note: RFC 1951 is available from "http://www.faqs.org/rfcs/rfc1951.html".

Copyright National Electrical Manufacturers Association
Provided by IHS under license with NEMA
No reproduction or networking permitted without license from IHS
Not for Resale

Section 3 Definitions

For the purposes of this standard, the following definitions apply.

3.1 REFERENCE MODEL DEFINITIONS

This part of the standard makes use of the following terms defined in ISO 7498:

a) Application Entities
b) OSI Presentation Protocol

3.2 ACSE SERVICE DEFINITIONS

This part of the standard makes use of the following terms defined in ISO 8649:

a) Association

3.3 PRESENTATION SERVICE DEFINITIONS

This part of the standard makes use of the following terms defined in ISO 8822:

a) Presentation Context
b) Presentation Data Value (PDV)
c)Transfer Syntax
d) Transfer Syntax Name

3.4 OBJECT IDENTIFICATION DEFINITIONS

This part of the standard makes use of the following terms defined in ISO 8824:

a) OSI Object Identification

3.5 DICOM INTRODUCTION AND OVERVIEW DEFINITIONS

This part of the standard makes use of the following terms defined in PS 3.1:

a) Attribute
b) Command Element
c)Data Dictionary

3.6 DICOM CONFORMANCE DEFINITIONS

This part of the standard makes use of the following terms defined in PS 3.2:

a) Conformance Statement

3.7 DICOM INFORMATION OBJECT DEFINITIONS

This part of the standard makes use of the following terms defined in PS 3.3:

a) Attribute Tag

Copyright National Electrical Manufacturers Association
Provided by IHS under license with NEMA
No reproduction or networking permitted without license from IHS
Not for Resale

b) Information Entity

c)Information Object Definition (IOD)

d) Multi-Frame Image

3.8 DICOM SERVICE CLASS SPECIFICATIONS DEFINITIONS

This part of the standard makes use of the following terms defined in PS 3.4:

a) Service-Object Pair (SOP) Class

3.9 DICOM NETWORK COMMUNICATION SUPPORT FOR MESSAGE EXCHANGE DEFINITIONS

This part of the standard makes use of the following terms defined in PS 3.8:

a) DICOM Upper Layer Service

3.10 DICOM DATA STRUCTURES AND ENCODING DEFINITIONS

The following definitions are commonly used in this Standard:

BASIC OFFSET TABLE: A table of pointers to individual frames of an encapsulated multi-frame image.

BIG ENDIAN: A form of byte ordering where multiple byte binary values are encoded with the most significant byte encoded first, and the remaining bytes encoded in decreasing order of significance.

CHARACTER REPERTOIRE: A finite set of different characters that is considered to be complete for a given purpose and is specified independently of their encoding (also referred to as a character set).

DATA ELEMENT: A unit of information as defined by a single entry in the data dictionary. An encoded Information Object Definition (IOD) Attribute that is composed of, at a minimum, three fields: a Data Element Tag, a Value Length, and a Value Field. For some specific Transfer Syntaxes, a Data Element also contains a VR Field where the Value Representation of that Data Element is specified explicitly.

DATA ELEMENT TAG: A unique identifier for a Data Element composed of an ordered pair of numbers (a Group Number followed by an Element Number).

DATA ELEMENT TYPE: Used to specify whether an Attribute of an Information Object Definition or an Attribute of a SOP Class Definition is mandatory, mandatory only under certain conditions, or optional. This translates to whether a Data Element of a Data Set is mandatory, mandatory only under certain conditions, or optional.

DATA SET: Exchanged information consisting of a structured set of Attribute values directly or indirectly related to Information Objects. The value of each Attribute in a Data Set is expressed as a Data Element. A collection of Data Elements ordered by increasing Data Element Tag number that is an encoding of the values of Attributes of a real world object.

DEFINED TERM: The Value of a Data Element is a Defined Term when the Value of the element may be one of an explicitly specified set of standard values, and these values may be extended by implementors.

ELEMENT NUMBER: The second number in the ordered pair of numbers that makes up a Data Element Tag.

ENUMERATED VALUE: The Value of a Data Element is an Enumerated Value when the value of the element must be one of an explicitly specified set of standard values, and these values shall not be extended by implementors.

Copyright National Electrical Manufacturers Association
Provided by IHS under license with NEMA
No reproduction or networking permitted without license from IHS
Not for Resale

GROUP NUMBER: The first number in the ordered pair of numbers that makes up a Data Element Tag.

ITEM: A component of the Value of a Data Element that is of Value Representation Sequence of Items. An Item contains a Data Set.

ITEM DELIMITATION DATA ELEMENT: Used to mark the end of an Item of Undefined Length in a Sequence of Items. This is the last Data Element in an Item of Undefined Length.

LITTLE ENDIAN: A form of byte ordering where multiple byte binary values are encoded with the least significant byte encoded first; and the remaining bytes encoded in increasing order of significance.

NESTED DATA SET: A Data Set contained within a Data Element of another Data Set. Data Sets can be nested recursively. Only Data Elements with Value Representation Sequence of Items may, themselves, contain Data Sets.

PIXEL CELL: The container for a single Pixel Sample Value that may include unused bits or bits for data other than the Pixel Sample Value (e.g. overlay planes). The size of a Pixel Cell shall be specified by the Bits Allocated (0028, 0100) Data Element.

PIXEL DATA: Graphical data (e.g., images or overlays) of variable pixel-depth encoded in the Pixel Data Element, with Value Representation OW or OB. Additional descriptor Data Elements are often used to describe the contents of the Pixel Data element.

PIXEL SAMPLE VALUE: A value associated with an individual pixel. An individual pixel consists of one or more Pixel Sample Values (e.g. color images).

PRIVATE DATA ELEMENT: Additional Data Element, defined by an implementor, to communicate information that is not contained in Standard Data Elements. Private Data elements have odd Group Numbers.

REPEATING GROUP: Standard Data Elements within a particular range of Group Numbers where elements that have identical Element Numbers have the same meaning within each Group (and the same VR, VM, and Data Element Type). Repeating Groups shall only exist for Curves and Overlay Planes (Group Numbers (50xx,eeee) and (60xx,eeee), respectively) and are a remnant of versions of this standard prior to V3.0.

RETIRED DATA ELEMENT: A Data Element that is unsupported beginning with Version 3.0 of this standard. Implementations may continue to support Retired Data Elements for the purpose of backward compatibility with versions prior to V3.0, but this is not a requirement of this version of the standard.

SEQUENCE DELIMITATION ITEM: Item used to mark the end of a Sequence of Items of Undefined Length. This Item is the last Item in a Sequence of Items of Undefined Length.

SEQUENCE OF ITEMS (VALUE REPRESENTATION SQ): A Value Representation for Data Elements that contain a sequence of Data Sets. Sequence of Items allows for Nested Data Sets.

STANDARD DATA ELEMENT: A Data Element defined in the DICOM Standard, and therefore listed in the DICOM Data Element Dictionary in PS 3.6.

TRANSFER SYNTAX (Standard and Private): A set of encoding rules that allow Application Entities to unambiguously negotiate the encoding techniques (e.g., Data Element structure, byte ordering, compression) they are able to support, thereby allowing these Application Entities to communicate.

UNDEFINED LENGTH: The ability to specify an unknown length for a Data Element Value (of Value Representation SQ, OW, or OB) or Item. Data Elements and Items of Undefined Length are delimited with Sequence Delimitation Items and Item Delimiter Data Elements, respectively.

Copyright National Electrical Manufacturers Association
Provided by IHS under license with NEMA
No reproduction or networking permitted without license from IHS
Not for Resale

UNIQUE IDENTIFIER (UID): A string of characters that uniquely identifies a wide variety of items; guaranteeing uniqueness across multiple countries, sites, vendors and equipment.

VALUE: A component of a Value Field. A Value Field may consist of one or more of these components.

VALUE FIELD: The field within a Data Element that contains the Value(s) of that Data Element.

VALUE LENGTH: The field within a Data Element that contains the length of the Value Field of the Data Element.

VALUE MULTIPLICITY (VM): Specifies the number of Values contained in the Value Field of a Data Element.

VALUE REPRESENTATION (VR): Specifies the data type and format of the Value(s) contained in the Value Field of a Data Element.

VALUE REPRESENTATION FIELD: The field where the Value Representation of a Data Element is stored in the encoding of a Data Element structure with explicit VR.

3.11 CHARACTER HANDLING DEFINITIONS

This part of the standard makes use of the following terms defined in ISO/IEC 2022:1994

a) Coded Character Set; Code
b) Code Extension
c)Control Character
d) To Designate
e) Escape Sequence
f) Graphic Character
g) To Invoke

Copyright National Electrical Manufacturers Association
Provided by IHS under license with NEMA
No reproduction or networking permitted without license from IHS
Not for Resale

Section 4 Symbols and abbreviations

The following symbols and abbreviations are used in this part of the Standard.

ACR: American College of Radiology

AE: Application Entity

ANSI: American National Standards Institute

CEN TC251: Comite Europeen de Normalisation - Technical Committee 251 - Healthcare Informatics

DICOM: Digital Imaging and Communications in Medicine

HISPP: Healthcare Information Standards Planning Panel

HL7: Healthcare Industry Level 7 Interface Standards

IEEE: Institute of Electrical and Electronics Engineers

IOD: Information Object Definition

ISO: International Standards Organization

JIRA: Japan Industries Association of Radiation Apparatus

MSDS: Healthcare Message Standard Developers Sub-Committee

NEMA: National Electrical Manufacturers Association

OSI: Open Systems Interconnection

RLE: Run Length Encoding

TCP/IP: Transmission Control Protocol/Internet Protocol

UID: Unique Identifier

SOP: Service-Object Pair

VM: Value Multiplicity

VR: Value Representation

Copyright National Electrical Manufacturers Association
Provided by IHS under license with NEMA
No reproduction or networking permitted without license from IHS
Not for Resale

Section 5 Conventions

Word(s) are capitalized in this document (not headings) to help the reader understand that these word(s) have been previously defined in Section 3 of this document and are to be interpreted with that meaning.

The Data Element Tag is represented as (gggg,eeee), where gggg equates to the Group Number and eeee equates to the Element Number within that Group. The Data Element Tag is represented in hexadecimal notation as specified for each Data Element in PS 3.6.

The notation XXXXH, where XXXX is one or more hexadecimal digits, and "H" is used to signify a hexadecimal number.

Section 6 Value Encoding

A Data Set is constructed by encoding the values of Attributes specified in the Information Object Definition (IOD) of a Real-World Object. The specific content and semantics of these Attributes are specified in Information Object Definitions (see PS 3.3). The range of possible data types of these values and their encoding are specified in this section. The structure of a Data Set, which is composed of Data Elements containing these values, is specified in Section 7.

Throughout this part, as well as other parts of the DICOM Standard, Tags are used to identify both specific Attributes and their corresponding Data Elements.

6.1 SUPPORT OF CHARACTER REPERTOIRES

Values that are text or character strings can be composed of Graphic and Control Characters. The Graphic Character set, independent of its encoding, is referred to as a Character Repertoire. Depending on the native language context in which Application Entities wish to exchange data using the DICOM Standard, different Character Repertoires will be used. The Character Repertoires supported by DICOM are defined in ISO 8859.

In addition, DICOM supports the following Character Repertoires for the Japanese language:

JIS X 0201-1976 Code for Information Interchange

JIS X 0208-1990 Code for the Japanese Graphic Character set for information interchange

JIS X 0212-1990 Code of the supplementary Japanese Graphic Character set for information interchange

6.1.1 REPRESENTATION OF ENCODED CHARACTER VALUES

As defined in the ISO Standards referenced in this section, byte values used for encoded representations of characters are represented in this section as two decimal numbers in the form column/row.

This means that the value can be calculated as (column * 16) + row, e.g., 01/11 corresponds to the value 27 (1BH).

Note: Two digit hex notation will be used throughout the remainder of this standard to represent character encoding. The column/row notation is used only within Section 6.1 to simplify any cross referencing with applicable ISO standards.

The byte encoding space is divided into four ranges of values:

Copyright National Electrical Manufacturers Association
Provided by IHS under license with NEMA
No reproduction or networking permitted without license from IHS
Not for Resale

CL bytes from 00/00 to 01/15

GL bytes from 02/00 to 07/15

CR bytes from 08/00 to 09/15

GR bytes from 10/00 to 15/15

Note: ISO 8859 does not differentiate between a code element, e.g. G0, and the area in the code table, e.g. GL, where it is invoked. The term "G0" specifies the code element as well as the area in the code table. In ISO/IEC 2022 there is a clear distinction between the code elements (G0, G1, G2, and G3) and the areas in which the code elements are invoked (GL or GR). In this Standard the nomenclature of ISO/IEC 2022 is used.

The Control Character set C0 shall be invoked in CL and the Graphic Character sets G0 and G1 in GL and GR respectively. Only some Control Characters from the C0 set are used in DICOM (see Section 6.1.3), and characters from the C1 set shall not be used.

6.1.2 GRAPHIC CHARACTERS

A Character Repertoire, or character set, is a collection of Graphic Characters specified independently of their encoding. In DICOM all references to Character Repertoires are made via the ISO registration number specified in ISO 2375 and are of the form `ISO-IR xxx.`

Many standards, including ISO 8859 (Parts 1-9), specify Coded Character Sets. Coded Character Sets are Graphic Character sets along with the one to one relationship between each character of the set and its coded representation.

6.1.2.1 Default character repertoire

The default repertoire for character strings in DICOM shall be the Basic G0 Set of the International Reference Version of ISO 646:1990 (ISO-IR 6). See Annex E for a table of the DICOM default repertoire and its encoding.

Note: This Basic G0 Set is identical with the common character set of ISO 8859.

6.1.2.2 Extension or replacement of the default character repertoire

DICOM Application Entities (AEs) that extend or replace the default repertoire convey this information in the Specific Character Set (0008,0005) Attribute.

Note: The Attribute Specific Character Set (0008,0005) is encoded using a subset of characters from ISO-IR 6. See the definition for the Value Representation (VR) of Code String (CS) in Table 6.2.1.

For Data Elements with Value Representations of SH (Short String), LO (Long String), ST (Short Text), LT (Long Text), PN (Person Name) or UT (Unlimited Text) the default character repertoire may be extended or replaced (these Value Representations are described in more detail in Section 6.2). If such an extension or replacement is used, the relevant "Specific Character Set" shall be defined as an attribute of the SOP Common Module (0008,0005) (see PS 3.3) and shall be stated in the Conformance Statement. PS 3.2 gives conformance guidelines.

Note: 1. Preferred repertoires as defined in ENV 41 503 and ENV 41 508 for the use in Western and Eastern Europe, respectively, are: ISO-IR 100, ISO-IR 101, ISO-IR 144, ISO-IR 126. See Section 6.1.2.3.

2. Information Object Definitions using different character sets cannot rely—per se— on lexical ordering or string comparison of data elements represented as character strings. These operations can only be carried out within a given character repertoire and not across repertoire boundaries.

6.1.2.3 Encoding of character repertoires

The 7-bit default character repertoire can be replaced for use in Value Representations SH, LO, ST, LT, PN and UT with one of the single-byte codes defined in PS3.3.

Copyright National Electrical Manufacturers Association
Provided by IHS under license with NEMA
No reproduction or networking permitted without license from IHS
Not for Resale

Note: This replacement character repertoire does not apply to other textual Value Representations (AE and CS).

The replacement character repertoire shall be specified in value 1 of the Attribute Specific Character Set (0008,0005). Defined Terms for the Attribute Specific Character Set are specified in PS3.3.

Note: 1. The code table is split into the GL area which supports a 94 character set only (bit combinations 02/01 to 07/14) plus SPACE in 02/00 and the GR area which supports either a 94 or 96 character set (bit combinations 10/01 to 15/14 or 10/00 to 15/15). The default character set (ISO-IR 6) is always invoked in the GL area.

2. All character sets specified in ISO 8859 include ISO-IR 6. This set will always be invoked in the GL area of the code table and is the equivalent of ASCII (ANSI X3.4:1986), whereas the various extension repertoires are mapped onto the GR area of the code table.

3. The 8-bit code table of JIS X 0201 includes ISO-IR 14 (romaji alphanumeric characters) as the G0 code element and ISO-IR 13 (katakana phonetic characters) as the G1 code element. ISO-IR 14 is identical to ISO-IR 6, except that bit combination 05/12 represents a "¥"(YEN SIGN) and bit combination 07/14 represents an over-line.

Two character codes of the single-byte character sets invoked in the GL area of the code table, 02/00 and 05/12, have special significance in the DICOM Standard. The character SPACE, represented by bit combination 02/00, shall be used for the padding of Data Element Values that are character strings. The Graphic Character represented by the bit combination 05/12, "\" (BACKSLASH) in the repertoire ISO-IR 6, shall only be used in character strings with Value Representations of UT, ST and LT (see Section 6.2). Otherwise the character code 05/12 is used as a separator for multiple valued Data Elements (see Section 6.4).

Note: When the value of the Attribute Specific Character Set (0008,0005) is either "ISO_IR 13" or "ISO 2022 IR 13", the graphic character represented by the bit combination 05/12 is a "¥" (YEN SIGN) in the character set of ISO-IR 14.

The character DELETE (bit combination 07/15) shall not be used in DICOM character strings.

The replacement Character Repertoire specified in value 1 of the Attribute Specific Character Set (0008,0005) (or the default Character Repertoire if value 1 is empty) may be further extended with additional Coded Character Sets, if needed. The additional Coded Character Sets and extension mechanism shall be specified in additional values of the Attribute Specific Character Set. If Attribute Specific Character Set (0008,0005) has a single value, the DICOM SOP Instance supports only one single-byte code table and no Code Extension techniques. If Attribute Specific Character Set (0008,0005) has multiple values, the DICOM SOP Instance supports Code Extension techniques as described in ISO/IEC 2022:1994.

Note: Considerations on the Handling of Unsupported Character Sets:

In DICOM, character sets are not negotiated between Application Entities but are indicated by a conditional attribute of the SOP Common Module. Therefore, implementations may be confronted with character sets that are unknown to them. The machine should print or display such characters by replacing all unknown characters with the four characters "\nnn", where "nnn" is the three digit octal representation of each byte.

An example of this for an ASCII based machine would be as follows:

Character String:	Günther
Encoded representation:	04/07 15/12 06/14 07/04 06/08 06/05 07/02
ASCII based machine:	G\374nther

Implementations may also encounter Control Characters which they have no means to print or display. The machine may print or display such Control Characters by replacing the Control Character with the four characters "\nnn", where "nnn" is the three digit octal representation of each byte.

Copyright National Electrical Manufacturers Association
Provided by IHS under license with NEMA
No reproduction or networking permitted without license from IHS
Not for Resale

6.1.2.4 Code Extension Techniques

For Data Elements with Value Representations of SH (Short String), LO (Long String), ST (Short Text), LT (Long Text), UT (Unlimited Text) or PN (Person Name), the default character repertoire or the character repertoire specified by value 1 of Attribute Specific Character Set (0008,0005), may be extended using the Code Extension techniques specified by ISO/IEC 2022:1994.

If such Code Extension techniques are used, the related Specific Character Set or Sets shall be specified by value 2 to value n of the Attribute Specific Character Set (0008,0005) of the SOP Common Module (see PS 3.3), and shall be stated in the Conformance Statement.

Note: 1. Defined Terms for Specific Character Set (0008,0005) are defined in PS 3.3.
2. Support for Japanese kanji (ideographic), hiragana (phonetic), katakana (phonetic), and Korean (Hangul phonetic and Hanja ideographic) characters is defined in PS3.3. Definition of Chinese and other multi-byte character sets awaits consideration by the appropriate standards organizations.

6.1.2.5 Usage of Code Extension

DICOM supports Code Extension techniques if the Attribute Specific Character Set (0008,0005) is multi-valued. The method employed for Code Extension in DICOM is as described in ISO/IEC 2022:1994. The following assumptions shall be made and the following restrictions shall apply:

6.1.2.5.1 Assumed Initial States

- Code element G0 and code element G1 (in 8-bit mode only) are always invoked in the GL and GR areas of the code table respectively. Designated character sets for these code elements are immediately in use. Code elements G2 and G3 are not used.
- The primary set of Control Characters shall always be designated as the C0 code element and this shall be invoked in the CL area of the code table. The C1 code element shall not be used.

6.1.2.5.2 Restrictions for Code Extension

- As code elements G0 and G1 always have shift status, Locking Shifts (SI, SO) are not required and shall not be used.
- As code elements G2 and G3 are not used, Single Shifts (SS2 and SS3) cannot be used.
- Only the ESC sequences specified in PS 3.3 shall be used to activate Code Elements.

6.1.2.5.3 Requirements

The character set specified by value 1 of the Attribute Specific Character Set (0008,0005), or the default character repertoire if value 1 is missing, shall be active at the beginning of each textual Data Element value, and at the beginning of each line (i.e., after a CR and/or LF) or page (i.e., after an FF).

If within a textual value a character set other than the one specified in value 1 of the Attribute Specific Character Set (0008,0005), or the default character repertoire if value 1 is missing, has been invoked, the character set specified in the value 1, or the default character repertoire if value 1 is missing, shall be active in the following instances:

- before the end of line (i.e., before the CR and/or LF)
- before the end of a page (i.e. before the FF)
- before the end of a Data Element value (e.g. before the 05/12 character code which separates multiple textual Data Element Values — 05/12 corresponds to "\" (BACKSLASH) in the case of default repertoire IR-6 or "¥" (YEN SIGN) in the case of IR-14).
- before the "^" and "=" delimiters separating name components and name component groups in Data Elements with a VR of PN.

Copyright National Electrical Manufacturers Association
Provided by IHS under license with NEMA
No reproduction or networking permitted without license from IHS
Not for Resale

If within a textual value a character set other than the one specified in value 1 of the Attribute Specific Character Set (0008,0005), or the default character repertoire if value 1 is missing, is used, the Escape Sequence of this character set must be inserted explicitly in the following instances:

— before the first use of the character set in the line

— before the first use of the character set in the page

— before the first use of the character set in the Data Element value

— before the first use of the character set in the name component and name component group in Data Element with a VR of PN

Note: These requirements allow an application to skip lines, values, or components in a textual data element and start the new line with a defined character set without the need to track the character set changes in the text skipped. A similar restriction appears in the RFCs describing the use of multi-byte character sets over the Internet. An Escape Sequence switching to the value 1 or default Specific Character Set is not needed within a line, value, or component if no Code Extensions are present. Nor is a switch needed to the value 1 or default Specific Character Set if this character set has only the G0 Code Element defined, and the G0 Code Element is still active.

6.1.2.5.4 Levels of Implementation and Initial Designation

a) Attribute Specific Character Set (0008,0005) not present:

7-bit code

Implementation level: ISO 2022 Level 1 - Elementary 7-bit code (code-level identifier 1)

Initial designation: ISO-IR 6 (ASCII) as G0.

Code Extension shall not be used.

b) Attribute Specific Character Set (0008,0005) single value:

8-bit code

Implementation level: ISO 2022 Level 1 - Elementary 8-bit code (code-level identifier 11)

Initial designation: One of the ISO 8859-defined character sets, or the 8-bit code table of JIS X 0201 specified by value 1 of the Attribute Specific Character Set (0008,0005), as G0 and G1.

Code Extension shall not be used.

c)Attribute Specific Character Set (0008,0005) multi-valued:

8-bit code

Implementation level: ISO 2022 Level 4 - Redesignation of Graphic Character Sets within a Code (code-level identifier 14)

Initial designation: One of the ISO 8859-defined character sets, or the 8-bit code table of JIS X 0201 specified by value 1 of the Attribute Specific Character Set (0008,0005), as G0 and G1. If value 1 of the Attribute Specific Character Set (0008,0005) is empty, ISO-IR 6 (ASCII) is assumed as G0, and G1 is undefined.

All character sets specified in the various values of Attribute Specific Character Set (0008,0005), including value 1, may participate in Code Extension.

6.1.3 CONTROL CHARACTERS

Textual data that is interchanged may require some formatting information. Control Characters are used to indicate formatting, but their use in DICOM is kept to a minimum since some machines may handle them inappropriately. ISO 646:1990 and ISO 6429:1990 define Control Characters. As shown in Table 6.1-1 below, only a subset of four Control Characters from the C0 set shall be used in DICOM for the encoding of Control Characters in text strings.

Copyright National Electrical Manufacturers Association
Provided by IHS under license with NEMA
No reproduction or networking permitted without license from IHS
Not for Resale

Table 6.1-1
DICOM CONTROL CHARACTERS AND THEIR ENCODING

Acronym	Name	Coded Value
LF	Line Feed	00/10
FF	Form Feed	00/12
CR	Carriage Return	00/13
ESC	Escape	01/11

In text strings a new line shall be represented as CR LF.

Note: Some machines (such as UNIX based machines) may interpret LF (00/10) as a new line. In such cases, it is expected that the DICOM format is converted to the correct internal representation for that machine.

6.2 VALUE REPRESENTATION (VR)

The Value Representation of a Data Element describes the data type and format of that Data Element's Value(s). PS 3.6 lists the VR of each Data Element by Data Element Tag.

Values with VRs constructed of character strings, except in the case of the VR UI, shall be padded with SPACE characters (20H, in the Default Character Repertoire) when necessary to achieve even length. Values with a VR of UI shall be padded with a single trailing NULL (00H) character when necessary to achieve even length. Values with a VR of OB shall be padded with a single trailing NULL byte value (00H) when necessary to achieve even length.

All new VRs defined in future versions of DICOM shall be of the same Data Element Structure as defined in Section 7.1.2 (i.e. following the format for VRs such as OB, OW, SQ and UN).

Note: Since all new VRs will be defined as specified in section 7.1.2, an implementation may choose to ignore VRs not recognized by applying the rules stated in Section 7.1.2.

An individual Value, including padding, shall not exceed the Length of Value, except in the case of the last Value of a multi-valued field as specified in Section 6.4.

Note: The length of Value Representations for which the Character Repertoire can be extended or replaced are expressly specified in characters rather than bytes in Table 6.2-1. This is because the mapping from a character to the number of bytes used for that character's encoding may be dependent on the character set used.

Escape Sequences used for Code Extension shall not be included in the count of characters.

Copyright National Electrical Manufacturers Association
Provided by IHS under license with NEMA
No reproduction or networking permitted without license from IHS
Not for Resale

Table 6.2-1
DICOM VALUE REPRESENTATIONS

VR Name	Definition	Character Repertoire	Length of Value
AE Application Entity	A string of characters with leading and trailing spaces (20H) being non-significant. The value made of 16 spaces, meaning "no application name specified", shall not be used.	Default Character Repertoire excluding control characters LF, FF, CR and ESC.	16 bytes maximum
AS Age String	A string of characters with one of the following formats -- nnnD, nnnW, nnnM, nnnY; where nnn shall contain the number of days for D, weeks for W, months for M, or years for Y. Example: "018M" would represent an age of 18 months.	"0"-"9", "D", "W", "M", "Y" of Default Character Repertoire	4 bytes fixed
AT Attribute Tag	Ordered pair of 16-bit unsigned integers that is the value of a Data Element Tag. Example: A Data Element Tag of (0018,00FF) would be encoded as a series of 4 bytes in a Little-Endian Transfer Syntax as 18H,00H,FFH,00H and in a Big-Endian Transfer Syntax as 00H,18H,00H,FFH. Note: The encoding of an AT value is exactly the same as the encoding of a Data Element Tag as defined in Section 7.	not applicable	4 bytes fixed
CS Code String	A string of characters with leading or trailing spaces (20H) being non-significant.	Uppercase characters, "0"-"9", the SPACE character, and underscore "_", of the Default Character Repertoire	16 bytes maximum
DA Date	A string of characters of the format yyyymmdd; where yyyy shall contain year, mm shall contain the month, and dd shall contain the day. This conforms to the ANSI HISPP MSDS Date common data type. Example: "19930822" would represent August 22, 1993. Notes: 1. For reasons of backward compatibility with versions of this standard prior to V3.0, it is recommended that implementations also support a string of characters of the format yyyy.mm.dd for this VR. 2. See also DT VR in this table.	"0"-"9" of Default Character Repertoire Note: For reasons specified in the previous column, implementations may wish to support the "." character as well.	8 bytes fixed Note: For reasons specified in the previous columns, implementations may also wish to support a 10 byte fixed length as well.

Copyright National Electrical Manufacturers Association
Provided by IHS under license with NEMA
No reproduction or networking permitted without license from IHS
Not for Resale

DS Decimal String	A string of characters representing either a fixed point number or a floating point number. A fixed point number shall contain only the characters 0-9 with an optional leading "+" or "-" and an optional "." to mark the decimal point. A floating point number shall be conveyed as defined in ANSI X3.9, with an "E" or "e" to indicate the start of the exponent. Decimal Strings may be padded with leading or trailing spaces. Embedded spaces are not allowed.	"0"-"9", "+", "-", "E", "e", "." of Default Character Repertoire	16 bytes maximum
DT Date Time	The Date Time common data type. Indicates a concatenated date-time ASCII string in the format: YYYYMMDDHHMMSS.FFFFFF&ZZZZ The components of this string, from left to right, are YYYY = Year, MM = Month, DD = Day, HH = Hour, MM = Minute, SS = Second, FFFFFF = Fractional Second, & = "+" or "-", and ZZZZ = Hours and Minutes of offset. &ZZZZ is an optional suffix for plus/minus offset from Coordinated Universal Time. A component that is omitted from the string is termed a null component. Trailing null components of Date Time are ignored. Non-trailing null components are prohibited, given that the optional suffix is not considered as a component. Note: For reasons of backward compatibility with versions of this standard prior to V3.0, many existing DICOM Data Elements use the separate DA and TM VRs. Standard and Private Data Elements defined in the future should use DT, when appropriate, to be more compliant with ANSI HISPP MSDS.	"0"-"9", "+", "-", "." of Default Character Repertoire	26 bytes maximum
FL Floating Point Single	Single precision binary floating point number represented in IEEE 754:1985 32-bit Floating Point Number Format.	not applicable	4 bytes fixed
FD Floating Point Double	Double precision binary floating point number represented in IEEE 754:1985 64-bit Floating Point Number Format.	not applicable	8 bytes fixed
IS Integer String	A string of characters representing an Integer in base-10 (decimal), shall contain only the characters 0 - 9, with an optional leading "+" or "-". It may be padded with leading and/or trailing spaces. Embedded spaces are not allowed. The integer, n, represented shall be in the range: $-2^{31} <= n <= (2^{31} - 1)$.	"0"-"9", "+", "-" of Default Character Repertoire	12 bytes maximum
LO Long String	A character string that may be padded with leading and/or trailing spaces. The character code 5CH (the BACKSLASH "\" in ISO-IR 6) shall not be present, as it is used as the delimiter between values in multiple valued	Default Character Repertoire and/or as defined by (0008,0005).	64 chars maximum (see NOTE in 6.2)

Copyright National Electrical Manufacturers Association
Provided by IHS under license with NEMA
No reproduction or networking permitted without license from IHS
Not for Resale

	data elements. The string shall not have Control Characters except for ESC.		
LT Long Text	A character string that may contain one or more paragraphs. It may contain the Graphic Character set and the Control Characters, CR, LF, FF, and ESC. It may be padded with trailing spaces, which may be ignored, but leading spaces are considered to be significant. Data Elements with this VR shall not be multi-valued and therefore character code 5CH (the BACKSLASH "\" in ISO-IR 6) may be used.	Default Character Repertoire and/or as defined by (0008,0005).	10240 chars maximum (see NOTE in 6.2)
OB Other Byte String	A string of bytes where the encoding of the contents is specified by the negotiated Transfer Syntax. OB is a VR which is insensitive to Little/Big Endian byte ordering (see Section 7.3). The string of bytes shall be padded with a single trailing NULL byte value (00H) when necessary to achieve even length.	not applicable	see Transfer Syntax definition
OW Other Word String	A string of 16-bit words where the encoding of the contents is specified by the negotiated Transfer Syntax. OW is a VR which requires byte swapping within each word when changing between Little Endian and Big Endian byte ordering (see Section 7.3).	not applicable	see Transfer Syntax definition
PN Person Name	A character string encoded using a 5 component convention. The character code 5CH (the BACKSLASH "\" in ISO-IR 6) shall not be present, as it is used as the delimiter between values in multiple valued data elements. The string may be padded with trailing spaces. The five components in their order of occurrence are: family name complex, given name complex, middle name, name prefix, name suffix. Any of the five components may be an empty string. The component delimiter shall be the caret "^" character (5EH). Delimiters are required for interior null components. Trailing null components and their delimiters may be omitted. Multiple entries are permitted in each component and are encoded as natural text strings, in the format preferred by the named person. This conforms to the ANSI HISPP MSDS Person Name common data type. This group of five components is referred to as a Person Name component group. For the purpose of writing names in ideographic characters and in phonetic characters, up to 3 groups of components (see Annex H examples 1 and 2) may be used. The delimiter for component groups shall be the equals character "=" (3DH). The three component groups of components in their order of occurrence are: a single-byte character	Default Character Repertoire and/or as defined by (0008,0005) excluding Control Characters LF, FF, and CR but allowing Control Character ESC.	64 chars maximum per component group (see NOTE in 6.2)

Copyright National Electrical Manufacturers Association
Provided by IHS under license with NEMA
No reproduction or networking permitted without license from IHS
Not for Resale

	representation, an ideographic representation, and a phonetic representation. Any component group may be absent, including the first component group. In this case, the person name may start with one or more "=" delimiters. Delimiters are required for interior null component groups. Trailing null component groups and their delimiters may be omitted. Precise semantics are defined for each component group. See section 6.2.1. Examples: Rev. John Robert Quincy Adams, B.A. M.Div. "Adams^John Robert Quincy^^Rev.^B.A. M.Div." [One family name; three given names; no middle name; one prefix; two suffixes.] Susan Morrison-Jones, Ph.D., Chief Executive Officer "Morrison-Jones^Susan^^^Ph.D., Chief Executive Officer" [Two family names; one given name; no middle name; no prefix; two suffixes.] John Doe "Doe^John" [One family name; one given name; no middle name, prefix, or suffix. Delimiters have been omitted for the three trailing null components.] (for examples of the encoding of Person Names using multi-byte character sets see Annex H) Notes: 1. This five component convention is also used by HL7 as defined in ASTM E-1238-91 and further specialized by the ANSI MSDS. 2. In typical American and European usage the first occurrence of "given name" would represent the "first name". The second and subsequent occurrences of the "given name" would typically be treated as a middle name(s). The "middle name" component is retained for the purpose of backward compatibility with existing standards. 3. The "Degree" component present in ASTM E-1238-91 is absorbed into the "Suffix" component. 4. The implementor should remain mindful of earlier usage forms which represented "given names" as "first" and "middle" and that translations to and from this previous typical usage may be required. 5. For reasons of backward		

Copyright National Electrical Manufacturers Association
Provided by IHS under license with NEMA
No reproduction or networking permitted without license from IHS
Not for Resale

	compatibility with versions of this standard prior to V3.0, person names might be considered a single family name complex (single component without "^" delimiters).		
SH Short String	A character string that may be padded with leading and/or trailing spaces. The character code 05CH (the BACKSLASH "\" in ISO-IR 6) shall not be present, as it is used as the delimiter between values for multiple data elements. The string shall not have Control Characters except ESC.	Default Character Repertoire and/or as defined by (0008,0005).	16 chars maximum (see NOTE in 6.2)
SL Signed Long	Signed binary integer 32 bits long in 2's complement form. Represents an integer, n, in the range: $-2^{31} <= n <= (2^{31} - 1)$.	not applicable	4 bytes fixed
SQ Sequence of Items	Value is a Sequence of zero or more Items, as defined in Section 7.5.	not applicable (see Section 7.5)	not applicable (see Section 7.5)
SS Signed Short	Signed binary integer 16 bits long in 2's complement form. Represents an integer n in the range: $-2^{15} <= n <= (2^{15} - 1)$.	not applicable	2 bytes fixed
ST Short Text	A character string that may contain one or more paragraphs. It may contain the Graphic Character set and the Control Characters, CR, LF, FF, and ESC. It may be padded with trailing spaces, which may be ignored, but leading spaces are considered to be significant. Data Elements with this VR shall not be multi-valued and therefore character code 5CH (the BACKSLASH "\" in ISO-IR 6) may be used.	Default Character Repertoire and/or as defined by (0008,0005).	1024 chars maximum (see NOTE in 6.2)

Copyright National Electrical Manufacturers Association
Provided by IHS under license with NEMA
No reproduction or networking permitted without license from IHS
Not for Resale

TM Time	A string of characters of the format hhmmss.frac; where hh contains hours (range "00" - "23"), mm contains minutes (range "00" - "59"), ss contains seconds (range "00" - "59"), and frac contains a fractional part of a second as small as 1 millionth of a second (range "000000" - "999999"). A 24 hour clock is assumed. Midnight can be represented by only "0000" since "2400" would violate the hour range. The string may be padded with trailing spaces. Leading and embedded spaces are not allowed. One or more of the components mm, ss, or frac may be unspecified as long as every component to the right of an unspecified component is also unspecified. If frac is unspecified the preceding "." may not be included. Frac shall be held to six decimal places or less to ensure its format conforms to the ANSI HISPP MSDS Time common data type. Examples: 1. "070907.0705 " represents a time of 7 hours, 9 minutes and 7.0705 seconds. 2. "1010" represents a time of 10 hours, and 10 minutes. 3. "021 " is an invalid value. Notes: 1. For reasons of backward compatibility with versions of this standard prior to V3.0, it is recommended that implementations also support a string of characters of the format hh:mm:ss.frac for this VR. 2. See also DT VR in this table.	"0"-"9", "." of Default Character Repertoire	16 bytes maximum
UI Unique Identifier (UID)	A character string containing a UID that is used to uniquely identify a wide variety of items. The UID is a series of numeric components separated by the period "." character. If a Value Field containing one or more UIDs is an odd number of bytes in length, the Value Field shall be padded with a single trailing NULL (00H) character to ensure that the Value Field is an even number of bytes in length. See Section 9 and Annex B for a complete specification and examples.	"0"-"9", "." of Default Character Repertoire	64 bytes maximum
UL Unsigned Long	Unsigned binary integer 32 bits long. Represents an integer n in the range: $0 <= n < 2^{32}$.	not applicable	4 bytes fixed
UN Unknown	A string of bytes where the encoding of the contents is unknown (see Section 6.2.2).	not applicable	Any length valid for any of the other DICOM Value Representations

Copyright National Electrical Manufacturers Association
Provided by IHS under license with NEMA
No reproduction or networking permitted without license from IHS
Not for Resale

US Unsigned Short	Unsigned binary integer 16 bits long. Represents integer n in the range: $0 <= n < 2^{16}$.	not applicable	2 bytes fixed
UT Unlimited Text	A character string that may contain one or more paragraphs. It may contain the Graphic Character set and the Control Characters, CR, LF, FF, and ESC. It may be padded with trailing spaces, which may be ignored, but leading spaces are considered to be significant. Data Elements with this VR shall not be multi-valued and therefore character code 5CH (the BACKSLASH "\" in ISO-IR 6) may be used.	Default Character Repertoire and/or as defined by (0008,0005).	$2^{32}-2$ Note: limited only by the size of the maximum unsigned integer representable in a 32 bit VL field minus one, since FFFFFFFFH is reserved.

6.2.1 Ideographic and phonetic characters in Data Elements with VR of PN

Character strings representing person names are encoded using a convention for PN value representations based on component groups with 5 components.

For the purpose of writing names in ideographic characters and in phonetic characters, up to 3 component groups may be used. The delimiter of the component group shall be the equals character "=" (3DH). The three component groups in their order of occurrence are: a single-byte representation, an ideographic representation, and a phonetic representation.

Any component group may be absent, including the first component group. In this case, the person name may start with one or more "=" delimiters. Delimiters are also required for interior null component groups. Trailing null component groups and their delimiters may be omitted.

The first component group shall be encoded using a single-byte character set with no Code Extensions. The character set shall be the one specified by the Attribute Specific Character Set (0008,0005), value 1. If Attribute Specific Character Set (0008,0005) is not present, the default Character Repertoire ISO-IR 6 shall be used.

The second group shall be used for ideographic characters. The character sets used will usually be those from Attribute Specific Character Set (0008,0005), value 2 through n, and may use ISO 2022 escapes.

The third group shall be used for phonetic characters. The character sets used shall be those from Attribute Specific Character Set (0008,0005), value 1 through n, and may use ISO 2022 escapes.

Delimiter characters "^" and "=" are taken from the character set specified by value 1 of the Attribute Specific Character Set (0008,0005). If Attribute Specific Character Set (0008,0005), value 1 is not present, the default Character Repertoire ISO-IR 6 shall be used.

At the beginning of the value of the Person Name data element, the following initial condition is assumed: if Attribute Specific Character Set (0008,0005), value 1 is not present, the default Character Repertoire ISO-IR 6 is invoked, and if the Attribute Specific Character Set (0008,0005), value 1 is present, the character set specified by value 1 of the Attribute is invoked.

At the end of the value of the Person Name data element, and before the component delimiters "^" and "=", the character set shall be switched to the default character repertoire ISO-IR 6, if value 1 of the Attribute Specific Character Set (0008,0005) is not present. If value 1 of the Attribute Specific Character Set (0008,0005) is present, the character set shall be switched to that specified by value 1 of the Attribute.

The length of value of each component group is 64 characters maximum, including the delimiter for the component group.

Copyright National Electrical Manufacturers Association
Provided by IHS under license with NEMA
No reproduction or networking permitted without license from IHS
Not for Resale

6.2.2 Unknown (UN) Value Representation

The Unknown (UN) VR shall only be used for Private Attribute Data Elements and Standard Data Elements previously encoded as some DICOM VR other than UN using the DICOM Default Transfer Syntax (Implicit VR Little Endian), and whose Value Representation is currently unknown. As long as the VR is unknown the Value Field is insensitive to Little/Big Endian byte ordering and shall not be 'byte-swapped' (see section 7.3). See section 7.8 for a description of Private Data Attribute Elements and section 10 and Annex A for a discussion of Transfer Syntaxes.

The UN VR shall not be used for Private Creator Data Elements (i.e. the VR is equal to LO, see section 7.8.1).

Notes: 1. All other (non-default) DICOM Transfer Syntaxes employ explicit VR in their encoding, and therefore any Private and/or Standard Data Element Value Field Attribute value encoded and decoded using any Transfer Syntax other than the default, and not having been translated to the DICOM Default Transfer Syntax default in the interim, will have a known VR.

2. If at some point an application knows the actual VR for an Attribute of VR UN (e.g. has its own applicable data dictionary), it can assume that the Value Field of the Attribute is encoded in Little Endian byte ordering, irrespective of the current Transfer Syntax.

3. This VR of UN is needed when an explicit VR must be given to a Data Element whose Value Representation is unknown (e.g. store and forward). UN is a means to explicitly indicate that the Value Representation of a Data Element is unknown.

4. The length field of the Value Representation of UN may contain the value of "unknown length". See section 7.5.1 to determine how to parse Data Elements with an unknown length.

5. An example of a Standard Data Element using a UN VR is a Type 3 or Type U Standard Attribute added to an SOP Class definition. An existing application which does not support that new Attribute (and encounters it) could convert the VR to UN.

6.3 ENUMERATED VALUES AND DEFINED TERMS

The value of certain Data Elements may be chosen among a set of explicit Values satisfying its VR. These explicit Values are either Enumerated Values or Defined Terms and are specified in PS 3.3 and PS 3.4.

Enumerated Values are used when the specified explicit Values are the only Values allowed for a Data Element. A Data Element with Enumerated Values that does not have a Value equivalent to one of the Values specified in this standard has an invalid value within the scope of a specific Information Object/SOP Class definition.

Note: 1. Patient Sex (0010, 0040) is an example of a Data Element having Enumerated Values. It is defined to have a Value that is either "M", "F", or "O" (see PS 3.3). No other Value shall be given to this Data Element.
2. Future modifications of this standard may add to the set of allowed values for Data Elements with Enumerated Values. Such additions by themselves may or may not require a change in SOP Class UIDs, depending on the semantics of the Data Element.

Defined Terms are used when the specified explicit Values may be extended by implementors to include additional new Values. These new Values shall be specified in the Conformance Statement (see PS 3.2) and shall not have the same meaning as currently defined Values in this standard. A Data Element with Defined Terms that does not contain a Value equivalent to one of the Values currently specified in this standard shall not be considered to have an invalid value.

Note: Interpretation Type ID (4008,0210) is an example of a Data Element having Defined Terms. It is defined to have a Value that may be one of the set of standard Values; "REPORT" or "AMENDMENT" (see PS 3.3). Because this Data Element has Defined Terms other Interpretation Type IDs may be defined by the implementor.

6.4 VALUE MULTIPLICITY (VM) AND DELIMITATION

The Value Multiplicity of a Data Element specifies the number of Values that can be encoded in the Value Field of that Data Element. The VM of each Data Element is specified explicitly in PS 3.6. If the number of

Copyright National Electrical Manufacturers Association
Provided by IHS under license with NEMA
No reproduction or networking permitted without license from IHS
Not for Resale

Values that may be encoded in an element is variable, it shall be represented by two numbers separated by a dash; e.g., "1-10" means that there may be 1 to 10 Values in the element.

Note: Elements having a multiplicity of "S", which represented "single", in versions of this standard preceding V3.0, will have a multiplicity of "1" in this version of this standard.

When a Data Element has multiple Values, those Values shall be delimited as follows:

— For character strings, the character 5CH (BACKSLASH "\" in the case of the repertoire ISO IR-6) shall be used as a delimiter between Values.

Note: BACKSLASH ("\") is used as a delimiter between character string Values that are of fixed length as well as variable length.

— Multiple binary Values of fixed length shall be a series of concatenated Values without any delimiter.

Each string Value in a multiple valued character string may be of even or odd length, but the length of the entire Value Field (including "\" delimiters) shall be of even length. If padding is required to make the Value Field of even length, a single padding character shall be applied to the end of the Value Field (to the last Value), in which case the length of the last Value may exceed the Length of Value by 1..

Note: A padding character may need to be appended to a fixed length character string value in the above case.

Only the last UID Value in a multiple valued Data Element with a VR of UI shall be padded with a single trailing NULL (00H) character when necessary to ensure that the entire Value Field (including "\" delimiters) is of even length.

Data Elements with a VR of SQ, OW, OB or UN shall always have a Value Multiplicity of one.

Copyright National Electrical Manufacturers Association
Provided by IHS under license with NEMA
No reproduction or networking permitted without license from IHS
Not for Resale

Section 7 The Data Set

A Data Set represents an instance of a real world Information Object. A Data Set is constructed of Data Elements. Data Elements contain the encoded Values of Attributes of that object. The specific content and semantics of these Attributes are specified in Information Object Definitions (see PS 3.3).

The construction, characteristics, and encoding of a Data Set and its Data Elements are discussed in this section. Pixel Data, Overlays, and Curves are Data Elements whose interpretation depends on other related elements.

7.1 DATA ELEMENTS

A Data Element is uniquely identified by a Data Element Tag. The Data Elements in a Data Set shall be ordered by increasing Data Element Tag Number and shall occur at most once in a Data Set.

Note: A Data Element Tag may occur again within Nested Data Sets (see Section 7.5).

Two types of Data Elements are defined:

— Standard Data Elements have an even Group Number that is not (0000,eeee), (0002,eeee), (0004,eeee), or (0006,eeee).

Note: Usage of these groups is reserved for DIMSE Commands (see PS 3.7) and DICOM File Formats.

— Private Data Elements have an odd Group Number that is not (0001,eeee), (0003,eeee), (0005,eeee), (0007,eeee), or (FFFF,eeee). Private Data Elements are discussed further in Section 7.8.

Note: Although similar or related Data Elements often have the same Group Number; a Data Group does not convey any semantic meaning beginning with DICOM Version 3.0.

A Data Element shall have one of three structures. Two of these structures contain the VR of the Data Element (Explicit VR) but differ in the way their lengths are expressed, while the other structure does not contain the VR (Implicit VR). All three structures contain the Data Element Tag, Value Length and Value for the Data Element. See Figure 7.1-1.

Implicit and Explicit VR Data Elements shall not coexist in a Data Set and Data Sets nested within it (see Section 7.5). Whether a Data Set uses Explicit or Implicit VR, among other characteristics, is determined by the negotiated Transfer Syntax (see Section 10 and Annex A).

Note: VRs are not contained in Data Elements when using DICOM Default Transfer Syntax (DICOM Implicit VR Little Endian Transfer Syntax).

Copyright National Electrical Manufacturers Association
Provided by IHS under license with NEMA
No reproduction or networking permitted without license from IHS
Not for Resale

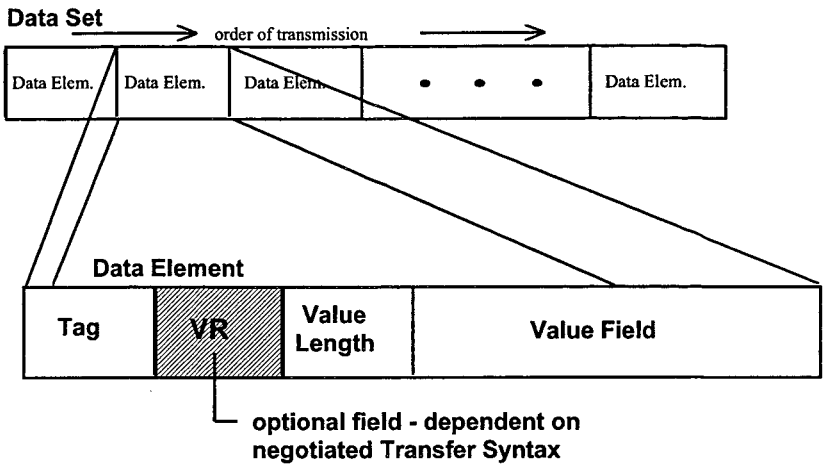

Figure 7.1-1
DICOM DATA SET AND DATA ELEMENT STRUCTURES

7.1.1 DATA ELEMENT FIELDS

A Data Element is made up of fields. Three fields are common to all three Data Element structures; these are the Data Element Tag, Value Length, and Value Field. A fourth field, Value Representation, is only present in the two Explicit VR Data Element structures. The Data Element structures are defined in Sections 7.1.2. and 7.1.3. The definitions of the fields are:

Data Element Tag: An ordered pair of 16-bit unsigned integers representing the Group Number followed by Element Number.

Value Representation: A two-byte character string containing the VR of the Data Element. The VR for a given Data Element Tag shall be as defined by the Data Dictionary as specified in PS 3.6. The two character VR shall be encoded using characters from the DICOM default character set.

Value Length: Either:

— a 16 or 32-bit (dependent on VR and whether VR is explicit or implicit) unsigned integer containing the Explicit Length of the Value Field as the number of bytes (even) that make up the Value. It does not include the length of the Data Element Tag, Value Representation, and Value Length Fields.

— a 32-bit Length Field set to Undefined Length (FFFFFFFFH). Undefined Lengths may be used for Data Elements having the Value Representation (VR) Sequence of Items (SQ) and Unknown (UN). For Data Elements with Value Representation OW or OB Undefined Length may be used depending on the negotiated Transfer Syntax (see Section 10 and Annex A).

Note: The decoder of a Data Set should support both Explicit and Undefined Lengths for VRs of SQ and UN and, when applicable, for VRs of OW and OB.

Copyright National Electrical Manufacturers Association
Provided by IHS under license with NEMA
No reproduction or networking permitted without license from IHS
Not for Resale

Value Field: An even number of bytes containing the Value(s) of the Data Element.

The data type of Value(s) stored in this field is specified by the Data Element's VR. The VR for a given Data Element Tag can be determined using the Data Dictionary in PS 3.6, or using the VR Field if it is contained explicitly within the Data Element. The VR of Standard Data Elements shall agree with those specified in the Data Dictionary.

The Value Multiplicity specifies how many Values with this VR can be placed in the Value Field. If the VM is greater than one, multiple values shall be delimited within the Value Field as defined previously in Section 6.4. The VMs of Standard Data Elements are specified in the Data Dictionary in PS 3.6.

Value Fields with Undefined Length are delimited through the use of Sequence Delimitation Items and Item Delimitation Data Elements which are described further in Section 7.5.

7.1.2 DATA ELEMENT STRUCTURE WITH EXPLICIT VR

When using the Explicit VR structures, the Data Element shall be constructed of four consecutive fields: Data Element Tag, VR, Value Length, and Value. Depending on the VR of the Data Element, the Data Element will be structured in one of two ways:

— for VRs of OB, OW, SQ and UN the 16 bits following the two character VR Field are reserved for use by later versions of the DICOM Standard. These reserved bytes shall be set to 0000H and shall not be used or decoded (Table 7.1-1). The Value Length Field is a 32-bit unsigned integer. If the Value Field has an Explicit Length, then the Value Length Field shall contain a value equal to the length (in bytes) of the Value Field. Otherwise, the Value Field has an Undefined Length and a Sequence Delimitation Item marks the end of the Value Field.

— for VRs of UT the 16 bits following the two character VR Field are reserved for use by later versions of the DICOM Standard. These reserved bytes shall be set to 0000H and shall not be used or decoded. The Value Length Field is a 32-bit unsigned integer. The Value Field is required to have an Explicit Length, that is the Value Length Field shall contain a value equal to the length (in bytes) of the Value Field.

Note: VRs of UT may not have an Undefined Length, ie. a Value Length of FFFFFFFFH.

— for all other VRs the Value Length Field is the 16-bit unsigned integer following the two character VR Field (Table 7.1-2). The value of the Value Length Field shall equal the length of the Value Field.

Table 7.1-1
DATA ELEMENT WITH EXPLICIT VR OF OB, OW, SQ OR UN

Tag		VR		Value Length	Value
Group Number (16-bit unsigned integer)	Element Number (16-bit unsigned integer)	VR (2 byte character string) of "OB", "OW", "SQ" or "UN"	Reserved (2 bytes) set to a value of 0000H	32-bit unsigned integer	Even number of bytes containing the Data Element Value(s) encoded according to the VR and negotiated Transfer Syntax. Delimited with Sequence Delimitation Item if of Undefined Length.
2 bytes	2 bytes	2 bytes	2 bytes	4 bytes	'Value Length' bytes if of Explicit Length

Copyright National Electrical Manufacturers Association
Provided by IHS under license with NEMA
No reproduction or networking permitted without license from IHS
Not for Resale

Table 7.1-2
DATA ELEMENT WITH EXPLICIT VR OTHER THAN OB, OW, SQ OR UN

Tag		VR	Value Length	Value
Group Number (16-bit unsigned integer)	Element Number (16-bit unsigned integer)	VR (2 byte character string)	(16-bit unsigned integer)	Even number of bytes containing the Data Element Value(s) encoded according to the VR and negotiated Transfer Syntax.
2 bytes	2 bytes	2 bytes	2 bytes	'Value Length' bytes

7.1.3 DATA ELEMENT STRUCTURE WITH IMPLICIT VR

When using the Implicit VR structure the Data Element shall be constructed of three consecutive fields: Data Element Tag, Value Length, and Value (see Table 7.1-3). If the Value Field has an Explicit Length then the Value Length Field shall contain a value equal to the length (in bytes) of the Value Field. Otherwise, the Value Field has an Undefined Length and a Sequence Delimitation Item marks the end of the Value Field.

Table 7.1-3
Data element with implicit VR

Tag		Value Length	Value
Group Number (16-bit unsigned integer)	Element Number (16-bit unsigned integer)	32-bit unsigned integer	Even number of bytes containing the Data Elements Value encoded according to the VR specified in PS 3.6 and the negotiated Transfer Syntax. Delimited with Sequence Delimitation Item if of Undefined Length.
2 bytes	2 bytes	4 bytes	'Value Length' bytes or Undefined Length

7.2 GROUP LENGTH

The Group Length (gggg,0000) Standard Data Element shall be implicitly defined for all Data Element groups with a Value Representation of UL and a Value Multiplicity of 1. It shall be an optional (Type 3 Data Element Type) Data Element in DICOM V3.0 (see Section 7.4 for a description of Data Element Types). It provides an optional optimization scheme in partial parsing of Data Sets by allowing the skipping of entire groups of Data Elements. Implementations may or may not choose to encode explicit Group Length in a Data Set. All implementations shall be able to accept or ignore such elements.

Note: Elements in groups 0, 2, 4 and 6 are not Standard Data Elements. Mandatory requirements for Group Length for groups 0 and 2 are specified elsewhere in the standard.

7.3 BIG ENDIAN VERSUS LITTLE ENDIAN BYTE ORDERING

Another component of the encoding of a Data Set that shall be agreed upon by communicating Application Entities is the Byte Ordering.

Copyright National Electrical Manufacturers Association
Provided by IHS under license with NEMA
No reproduction or networking permitted without license from IHS
Not for Resale

Little Endian byte ordering is defined as follows:

— In a binary number consisting of multiple bytes (e.g. a 32-bit unsigned integer value, the Group Number, the Element Number, etc.), the least significant byte shall be encoded first; with the remaining bytes encoded in increasing order of significance.

— In a character string consisting of multiple 8-bit single byte codes, the characters will be encoded in the order of occurrence in the string (left to right).

Big Endian byte ordering is defined as follows:

— In a binary number consisting of multiple bytes, the most significant byte shall be encoded first; with the remaining bytes encoded in decreasing order of significance.

— In a character string consisting of multiple 8-bit single byte codes, the characters will be encoded in the order of occurrence in the string (left to right).

Note: The packing of bits within values of OB or OW Value representation for Pixel Data and Overlay Data is described in Section 8.

Byte ordering is a component of an agreed upon Transfer Syntax (see Section 10). The default DICOM Transfer Syntax, which shall be supported by all AEs, uses Little Endian encoding and is specified in Annex A.1. Alternate Transfer Syntaxes, some of which use Big Endian encoding, are also specified in Annex A.

Note: The Command Set structure as specified in PS 3.7 is encoded using the Little Endian Implicit VR Transfer Syntax.

In the default case of Little Endian encoding, Big Endian Machines interpreting Data Sets shall do 'byte swapping' before interpreting or operating on certain Data Elements. The Data Elements affected are all those having VRs that are multiple byte Values and that are not a character string of 8-bit single byte codes. VRs constructed of a string of characters of 8-bit single byte codes are really constructed of a string of individual bytes, and are therefore not affected by byte ordering. The VRs that are not a string of characters and consist of multiple bytes are:

— 2-byte US, SS, OW and each component of AT

— 4-byte UL, SL, and FL

— 8 byte FD

Note: For the above VRs, the multiple bytes are presented in increasing order of significance when in Little Endian format. For example, an 8-byte Data Element with VR of FD, might be written in hexadecimal as 68AF4B2CH, but encoded in Little Endian would be 2C4BAF68H.

7.4 DATA ELEMENT TYPE

An attribute, encoded as a Data Element, may or may not be required in a Data Set, depending on that Attribute's Data Element Type.

The Data Element Type of an Attribute of an Information Object Definition or an Attribute of a SOP Class Definition is used to specify whether that Attribute is mandatory or optional. The Data Element Type also indicates if an Attribute is conditional (only mandatory under certain conditions). The Data Element Types of Attributes of Composite IODs are specified in PS 3.3. The Data Element Types of Attributes of Normalized IODs are specified as Attributes of SOP Classes in PS 3.4.

7.4.1 TYPE 1 REQUIRED DATA ELEMENTS

IODs and SOP Classes define Type 1 Data Elements that shall be included and are mandatory elements. The Value Field shall contain valid data as defined by the elements VR and VM as specified in PS 3.6. The Length of the Value Field shall not be zero. Absence of a valid Value in a Type 1 Data Element is a protocol violation.

Copyright National Electrical Manufacturers Association
Provided by IHS under license with NEMA
No reproduction or networking permitted without license from IHS Not for Resale

7.4.2 TYPE 1C CONDITIONAL DATA ELEMENTS

IODs and SOP Classes define Data Elements that shall be included under certain specified conditions. Type 1C elements have the same requirements as Type 1 elements under these conditions. It is a protocol violation if the specified conditions are met and the Data Element is not included.

When the specified conditions are not met, Type 1C elements shall not be included in the Data Set.

7.4.3 TYPE 2 REQUIRED DATA ELEMENTS

IODs and SOP Classes define Type 2 Data Elements that shall be included and are mandatory Data Elements. However, it is permissible that if a Value for a Type 2 element is unknown it can be encoded with zero Value Length and no Value. If the Value is known the Value Field shall contain that value as defined by the elements VR and VM as specified in PS 3.6. These Data Elements shall be included in the Data Set and their absence is a protocol violation.

Note: The intent of Type 2 Data Elements is to allow a zero length to be conveyed when the operator or application does not know its value or has a specific reason for not specifying its value. It is the intent that the device should support these Data Elements.

7.4.4 TYPE 2C CONDITIONAL DATA ELEMENTS

IODs and SOP Classes define Type 2C elements that have the same requirements as Type 2 elements under certain specified conditions. It is a protocol violation if the specified conditions are met and the Data Element is not included.

When the specified conditions are not met, Type 2C elements shall not be included in the Data Set.

Note: An example of a Type 2C Data Element is Inversion Time (0018,0082). For several SOP Class Definitions, this Data Element is required only if the Scanning Sequence (0018,0020) has the Value "IR." It is not required otherwise. See PS 3.3.

7.4.5 TYPE 3 OPTIONAL DATA ELEMENTS

IODs and SOP Classes define Type 3 Data Elements that are optional Data Elements. Absence of a Type 3 element from a Data Set does not convey any significance and is not a protocol violation. Type 3 elements may also be encoded with zero length and no Value. The meaning of a zero length Type 3 Data Element shall be precisely the same as that element being absent from the Data Set.

7.5 NESTING OF DATA SETS

The VR identified "SQ" shall be used for Data Elements with a Value consisting of a Sequence of zero or more Items, where each Item contains a set of Data Elements. SQ provides a flexible encoding scheme that may be used for simple structures of repeating sets of Data Elements, or the encoding of more complex Information Object Definitions often called folders. SQ Data Elements can also be used recursively to contain multi-level nested structures.

Items present in an SQ Data Element shall be an ordered set where each Item may be referenced by its ordinal position. Each Item shall be implicitly assigned an ordinal position starting with the value 1 for the first Item in the Sequence, and incremented by 1 with each subsequent Item. The last Item in the Sequence shall have an ordinal position equal to the number of Items in the Sequence.

Notes: 1. This clause implies that item ordering is preserved during transfer and storage.

2. An IOD or Module Definition may choose to not use this ordering property of a Data Element with VR of SQ. This is simply done by not specifying any specific semantics to the ordering of Items, or by not specifying usage of the referencing of Items by ordering position.

The definition of the Data Elements encapsulated in each Item is provided by the specification of the Data Element (or associated Attribute) of Value Representation SQ. Items in a sequence of Items may or may not contain the same set of Data Elements. Data Elements with a VR of SQ may contain multiple Items but shall always have a Value Multiplicity of one (ie. a single Sequence).

Copyright National Electrical Manufacturers Association
Provided by IHS under license with NEMA
No reproduction or networking permitted without license from IHS
Not for Resale

There are three special SQ related Data Elements that are not ruled by the VR encoding rules conveyed by the Transfer Syntax. They shall be encoded as Implicit VR. These special Data Elements are Item (FFFE,E000), Item Delimitation Item (FFFE,E00D), and Sequence Delimitation Item (FFFE,E0DD). However, the Data Set within the Value Field of the Data Element Item (FFFE,E000) shall be encoded according to the rules conveyed by the Transfer Syntax.

7.5.1 ITEM ENCODING RULES

Each Item of a Data Element of Value Representation SQ shall be encoded as a DICOM Standard Data Element with a specific Data Element Tag of Value (FFFE,E000). The Item Tag is followed by a 4 byte Item Length field encoded in one of the following two ways:

a) Explicit Length: The number of bytes (even) contained in the Sequence Item Value (following but not including the Item Length Field) is encoded as a 32-bit unsigned integer value (see Section 7.1). This length shall include the total length of all Data Elements conveyed by this Item. This Item Length shall be equal to 00000000H if the Item contains no Data Set.

b) Undefined Length: The Item Length Field shall contain the value FFFFFFFFH to indicate an undefined Item length. It shall be used in conjunction with an Item Delimitation Data Element. This Item Delimitation Data Element has a Data Element Tag of (FFFE,E00D) and shall follow the Data Elements encapsulated in the Item. No Value shall be present in the Item Delimitation Data Element and its Length shall be 00000000H.

The encoder of a Data Set may choose either one of the two ways of encoding. Both ways of encoding shall be supported by decoders of Data Sets. Data Element Tags (FFFF,eeee) are reserved by this standard and shall not be used.

Each Item Value shall contain a DICOM Data Set composed of Data Elements. Within the context of each Item, these Data Elements shall be ordered by increasing Data Element Tag value and appear only once (as Data Set is defined in Section 7.1). There is no relationship between the ordering of the Data Elements contained within an Item and the ordering of the Data Element Tag of SQ Value Representation that contains that Item. One or more Data Elements in an Item may be of Value Representation SQ, thus allowing for recursion.

Section 7.8 specifies rules for incorporating Private Data Elements into Sequence Items.

7.5.2 DELIMITATION OF THE SEQUENCE OF ITEMS

Delimitation of the last Item of a Sequence of Items, encapsulated in a Data Element of Value Representation SQ, shall be in one of the two following ways:

a) Explicit Length: The number of bytes (even) contained in the Data Element Value (following but not including the Data Element Length Field) is encoded as a 32-bit unsigned integer value (see Section 7.1). This length shall include the total length resulting from the sequence of zero or more items conveyed by this Data Element. This Data Element Length shall be equal to 00000000H if the sequence of Items contains zero Items.

b) Undefined Length: The Data Element Length Field shall contain a Value FFFFFFFFH to indicate an Undefined Sequence length. It shall be used in conjunction with a Sequence Delimitation Item. A Sequence Delimitation Item shall be included after the last Item in the sequence. Its Item Tag shall be (FFFE,E0DD) with an Item Length of 00000000H. No Value shall be present.

The encoder of a Sequence of Items may choose either one of the two ways of encoding. Both ways of encoding shall be supported by decoders of the Sequence of Items.

Note: The Sequence Delimitation Item Tag (FFFE,E0DD) is different from the Item Delimitation Tag (FFFE,E00D) introduced above in that it indicates the end of a Sequence of Items whose Length was left undefined. If an undefined length Item is the last Item of a Sequence of Items of undefined length, then an Item Delimitation Tag will be followed by a Sequence Delimitation Tag.

Copyright National Electrical Manufacturers Association
Provided by IHS under license with NEMA
No reproduction or networking permitted without license from IHS
Not for Resale

For an example of an SQ Data Element of Explicit Length encapsulating Items of Explicit Length see Table 7.5-1.

For an example of an SQ Data Element of Undefined Length encapsulating Items of Explicit Length see Table 7.5-2.

For an example of an SQ Data Element of Undefined Length encapsulating Items of both Explicit and Undefined Length see Table 7.5-3.

Table 7.5-1
EXAMPLE OF A DATA ELEMENT WITH IMPLICIT VR DEFINED AS A SEQUENCE OF ITEMS (VR = SQ) WITH THREE ITEMS OF EXPLICIT LENGTH

Data Element Tag	**Data Element Length**	**Data Element Value**								
(gggg, eeee) with VR of SQ	00000F00H	**First Item**			**Second Item**			**Third Item**		
		Item Tag (FFFE, E000)	Item Length 0000 04F8H	Item Value Data Set	Item Tag (FFFE, E000)	Item Length 0000 04F8H	Item Value Data Set	Item Tag (FFFE, E000)	Item Length 0000 04F8H	Item Value Data Set
4 bytes	4 bytes	4 bytes	4 bytes	04F8H bytes	4 bytes	4 bytes	04F8H bytes	4 bytes	4 bytes	04F8H bytes

Table 7.5-2
EXAMPLE OF A DATA ELEMENT WITH EXPLICIT VR DEFINED AS A SEQUENCE OF ITEMS (VR = SQ) OF UNDEFINED LENGTH, CONTAINING TWO ITEMS OF EXPLICIT LENGTH

Data Element Tag	**Value Representation**		**Data Element Length**	**Data Element Value**							
(gggg, eeee) with VR of SQ	SQ	0000H Reserved	FFFF FFFFH un-defined length	**First Item**			**Second Item**			**Sequence Delimitation Item**	
				Item Tag (FFFE, E000)	Item Length 98A5 2C68H	Item Value Data Set	Item Tag (FFFE, E000)	Item Length B321 762CH	Item Value Data Set	Seq. Delim. Tag (FFFE, E0DD)	Item Length 0000 0000H
4 bytes	2 bytes	2 bytes	4 bytes	4 bytes	4 bytes	98A5 2C68H bytes	4 bytes	4 bytes	B321 762CH bytes	4 bytes	4 bytes

Note: The Data Set within the Item Values in Table 7.5-2 have VRs Explicitly defined.

Copyright National Electrical Manufacturers Association
Provided by IHS under license with NEMA
No reproduction or networking permitted without license from IHS
Not for Resale

Table 7.5-3
EXAMPLE OF A DATA ELEMENT WITH IMPLICIT VR DEFINED AS A SEQUENCE OF ITEMS (VR = SQ) OF UNDEFINED LENGTH, CONTAINING TWO ITEMS WHERE ONE ITEM IS OF EXPLICIT LENGTH AND THE OTHER ITEM IS OF UNDEFINED LENGTH

Data Element Tag	Data Element Length	Data Element Value									
		First Item			Second Item					Sequence Delimitation Item	
(gggg, eeee) with VR of SQ	FFFF FFFFH un-defined length	Item Tag (FFFE, E000	Item Length 0000 17B6H	Item Value Data Set	Item Tag (FFFE, E000)	Item Length FFFF FFFFH un-defined length	Item Value Data Set	Item Delim. Tag (FFFE, E00D)	Length 0000 0000H	Seq. Delim. Tag (FFFE, E0DD)	Item Length 0000 0000H
4 bytes	4 bytes	4 bytes	4 bytes	17B6H bytes	4 bytes	4 bytes	un-defined length	4 bytes	4 bytes	4 bytes	4 bytes

7.5.3 SEQUENCE INHERITANCE

An encapsulated Data Set shall only include the Specific Character Set (0008,0005) data element if the Attribute Specific Character Set is defined in the IOD for that sequence of items.

Note: An encapsulated Data Set does not include the Specific Character Set data element unless the Specific Character Set Attribute is defined as part of the IOD for that sequence.

If an encapsulated Data Set includes the Specific Character Set Attribute, it shall apply only to the encapsulated Data Set. If the Attribute Specific Character Set is not explicitly included in an encapsulated Data Set, then the Specific Character Set value of the encapsulating Data Set applies.

7.6 REPEATING GROUPS

Multiple Overlay Planes and Curves are often associated with a single Image (see PS 3.3). Standard Data Elements with even Group Numbers (5000-501E,eeee) represent Curves, while elements with even Group Numbers (6000-601E,eeee) represent Overlay Planes. Both of these ranges of Group numbers are known as Repeating Groups. This use of group numbers is a remnant of versions of this standard prior to V3.0 that associated a semantic meaning with particular Groups.

In each of these ranges of Group Numbers, Standard Data Elements that have identical Element Numbers have the same meaning within each Group (and the same VR, VM, and Data Element Type). The notation (50xx,eeee) and (60xx,eeee) are used for the Group Number in Data Element Tags when referring to a common Data Element across these groups (see PS 3.6). Groups (50xx,eeee) and (60xx,eeee) are called Repeating Groups because of these characteristics.

Repeating Groups shall only be allowed in the even Groups (6000-601E,eeee) and even Groups (5000-501E,eeee) cases. In the future, Data Elements with VRs of SQ shall be used to serve a similar purpose.

Note: Private Groups in the odd Groups (5001-501F,eeee) and (6001-601F,eeee) may still be used, but there is no implication of repeating semantics, nor any implied shadowing of the standard repeating groups.

Copyright National Electrical Manufacturers Association
Provided by IHS under license with NEMA
No reproduction or networking permitted without license from IHS
Not for Resale

7.7 RETIRED DATA ELEMENTS

Certain Data Elements are no longer supported beginning with Version 3.0 of this standard. These Data Elements are retired and are denoted as such (RET) in the VR column in PS 3.6. Implementations may continue to support these Data Elements for the purpose of backward compatibility with versions of this standard prior to V3.0, but this is not a requirement of this standard. If a retired Data Element is used it must contain valid data as specified in versions of this standard prior to V3.0. Any other use of a retired Data Element, and its associated Data Element Tag, is reserved by this standard. Retired Data Element Tags shall not be redefined in later versions of this standard.

7.8 PRIVATE DATA ELEMENTS

Implementations may require communication of information that cannot be contained in Standard Data Elements. Private Data Elements are intended to be used to contain such information.

Private Data Elements have the same structure as Standard Data Elements specified earlier in Section 7.1 (i.e., Data Element Tag field, optional VR field, length field, and value field). The Group Number used in the Element Tag of Private Data Elements shall be an odd number. Private Data Elements shall be contained in the Data Set in increasing numeric order of Data Element Tag. The Value Field of a Private data element shall have one of the VRs specified by this standard in Section 6.2.

For each Information Object Definition or SOP Class Definition, certain Data Elements are required (Data Element Type 1, 1C, 2, or 2C) as specified in PS 3.3 and PS 3.4. Private Data Elements shall not be used in place of required Standard Data Elements.

7.8.1 PRIVATE DATA ELEMENT TAGS

It is possible that multiple implementors may define Private Elements with the same (odd) group number. To avoid conflicts, Private Elements shall be assigned Private Data Element Tags according to the following rules.

a) Private Creator Data Elements numbered (gggg,0010-00FF) (gggg is odd) shall be used to reserve a block of Elements with Group Number gggg for use by an individual implementor. The implementor shall insert an identification code in the first unused (unassigned) Element in this series to reserve a block of Private Elements. The VR of the private identification code shall be LO (Long String) and the VM shall be equal to 1.

b) Private Creator Data Element (gggg,0010), is a Type 1 Data Element that identifies the implementor reserving element (gggg,1000-10FF), Private Creator Data Element (gggg,0011) identifies the implementor reserving elements (gggg,1100-11FF), and so on, until Private Creator Data Element (gggg,00FF) identifies the implementor reserving elements (gggg,FF00-FFFF).

c)Encoders of Private Data Elements shall be able to dynamically assign private data to any available (unreserved) block(s) within the Private group, and specify this assignment through the blocks corresponding Private Creator Data Element(s). Decoders of Private Data shall be able to accept reserved blocks with a given Private Creator identification code at any position within the Private group specified by the blocks corresponding Private Creator Data Element.

Note: 1. The versions of this standard prior to V3.0 described shadow groups. These were groups with a group number one greater than the standard groups. Elimination of conflicts in Private Data Element Tags have made this distinction obsolete and this terminology has been retired.
2. The versions of this standard prior to V3.0 specified private group element numbers (gggg,10FF-7FFF) reserved for manufacturers and private group element numbers (gggg, 8100-FFFF) reserved for users. Elimination of conflicts in Private Data Element Tags has made this distinction obsolete and this specification has been retired.

Since each Item within a sequence is a self contained Data Set (see Section 7.5 on the nesting of Data Sets via Sequences of Items), any Item which contains Private Data Elements shall also have Private Creator Data Elements reserving blocks of Elements for those Private Data Elements. The scope of the

Copyright National Electrical Manufacturers Association
Provided by IHS under license with NEMA
No reproduction or networking permitted without license from IHS
Not for Resale

reservation is just within the Item. Items do not inherit the Private Data Element reservations made by Private Creator Data Elements in the Data Set in which the Item is nested.

Note: 1. If a sequence is itself a Private Data Element and the Items within the sequence also have Private Data Elements, then there will be Private Creator Data Elements both outside the sequence and within the sequence Items.
2. Different Items may reserve the same block of Private Data Elements for different private creators. This is necessary to allow the nesting of Data Sets collected from multiple sources into folders.

7.8.2 VR RULES FOR PRIVATE ELEMENTS

The Value Representations used for Private Data Elements shall be the same as those VRs specified for Standard Data Elements in Section 6.2.

Copyright National Electrical Manufacturers Association
Provided by IHS under license with NEMA
No reproduction or networking permitted without license from IHS
Not for Resale

Section 8 Encoding of Pixel, Overlay and Waveform Data

8.1 PIXEL AND OVERLAY DATA, AND RELATED DATA ELEMENTS

The Pixel Data Element (7FE0,0010) and Overlay Data Element (60xx,3000) shall be used for the exchange of encoded graphical image data. These elements along with additional Data Elements, specified as Attributes of the Image Information Entities defined in PS 3.3, shall be used to describe the way in which the Pixel Data and Overlay Data are encoded and shall be interpreted. Finally, depending on the negotiated Transfer Syntax (see Section 10 and Annex A), Pixel Data may be compressed.

The Pixel Data Element (7FE0,0010) and Overlay Data Element (60xx,3000) have a VR of OW or OB, depending on the negotiated Transfer Syntax (see Annex A). The only difference between OW and OB being that OB, a string of bytes, shall be unaffected by Byte Ordering (see Section 7.3).

8.1.1 Pixel data encoding of related data elements

Encoded Pixel Data of various bit depths shall be accommodated. The following three Data Elements shall define the Pixel structure:

- Bits Allocated (0028,0100)
- Bits Stored (0028,0101)
- High Bit (0028,0102)

Each Pixel Cell shall contain a single Pixel Sample Value. The size of the Pixel Cell shall be specified by Bits Allocated (0028,0100). Bits Stored (0028,0101) defines the total number of these allocated bits that will be used to represent a Pixel Sample Value. Bits Stored (0028,0101) shall never be larger than Bits Allocated (0028,0100). High Bit (0028,0102) specifies where the high order bit of the Bits Stored (0028,0101) is to be placed with respect to the Bits Allocated (0028,0100) specification. Bits not used for Pixel Sample Values can be used for overlay planes described further in PS3.3.

Note: For example, in Pixel Data with 16 bits (2 bytes) allocated, 12 bits stored, and bit 15 specified as the high bit, one pixel sample is encoded in each 16-bit word, with the 4 least significant bits of each word not containing Pixel Data. See Annex D for other examples of the basic encoding schemes.

Restrictions are placed on acceptable Values for Bits Allocated (0028,0100), Bits Stored (0028,0101), and High Bit (0028,0102) and are specified in the Information Object Definitions in PS3.3. Also, the Value Field containing Pixel Data, like all other Value Fields in DICOM, shall be an even number of bytes in length. This means that the Value Field may need to be padded with data that is not part of the image and shall not be considered significant. If needed, the padding bits shall be appended to the end of the Value Field, and shall be used only to extend the data to the next even byte increment of length.

In a multi-frame object that is transmitted in Native Format, the individual frames are not padded. The individual frames shall be concatenated and padding bits (if necessary) apply to the complete Value Field.

Note: Receiving applications should be aware that some older applications may send Pixel Data with excess padding, which was not explicitly prohibited in earlier versions of the Standard. Applications should be prepared to accept such Pixel Data elements, but may delete the excess padding. In no case should a sending application place private data in the padding data.

The field of bits representing the value of a Pixel Sample shall be a binary 2's complement integer or an unsigned integer, as specified by the Data Element Pixel Representation (0028,0103). The sign bit shall be the High Bit in a Pixel Sample Value that is a 2's complement integer. The minimum actual Pixel

Copyright National Electrical Manufacturers Association
Provided by IHS under license with NEMA
No reproduction or networking permitted without license from IHS
Not for Resale

Sample Value encountered in the Pixel Data is specified by Smallest Image Pixel Value (0028,0106) while the maximum value is specified by Largest Image Pixel Value (0028,0107).

8.1.2 Overlay data encoding of related data elements

Encoded Overlay Planes always have a bit depth of 1, but may be encoded in bits not used for Pixel Sample Values in the Pixel Data (7FE0,0010), or separate from the Pixel Data in Overlay Data (60xx,3000). The following two Data Elements shall define the Overlay Plane structure:

— Overlay Bits Allocated (60xx,0100)

— Overlay Bit Position (60xx,0102)

Notes: 1. There is no Data Element analogous to Bits Stored (0028,0101) since Overlay Planes always have a bit depth of 1.

2. Restrictions on the allowed values for these Data Elements are defined in PS 3.3.

3. For example, in Pixel Data with 16 bits (2 bytes) allocated, 12 bits stored, and bit 11 specified as the high bit, one pixel sample is encoded in each 16-bit word, with the 4 most significant bits of each word not containing Pixel Data. These 4 most significant bits can be used to store Overlay Planes. For example, a single plane can be stored in bit 15 by specifying 15 for Overlay Bit Position. Overlay Bits Allocated would be 16, since it is always equal to Bits Allocated for the case of overlays embedded in the Pixel Data, as defined in PS 3.3. See Annex D for other examples of the basic encoding schemes.

If Overlay Planes are sent in the Overlay Data Element (60xx,3000), the Value Representation OW is most often required. The Value Representation OB may also be used for Overlay Data in cases where the Value Representation is explicitly conveyed (see Annex A).

Note: The DICOM default Transfer Syntax (Implicit VR Little Endian) does not explicitly convey Value Representation and therefore the VR of OB may not be used for Pixel Data when using the default Transfer Syntax.

Overlay Data is encoded as the direct concatenation of the bits of a single Overlay Plane, where the first bit of an Overlay Plane is encoded in the least significant bit, immediately followed by the next bit of the Overlay Plane in the next most significant bit. When the Overlay Data crosses a word boundary in the OW case, or a byte boundary in the OB case, it shall continue to be encoded, least significant bit to most significant bit, in the next word, or byte, respectively (see Annex D). For Pixel Data encoded with the Value Representation OW, the byte ordering of the resulting 2-byte words is defined by the Little Endian or Big Endian Transfer Syntaxes negotiated at the Association Establishment (see Annex A).

Note: For Overlay Data encoded with the Value Representation OB, the Overlay Data encoding is unaffected by Little Endian or Big Endian byte ordering.

8.2 NATIVE OR ENCAPSULATED FORMAT ENCODING

Pixel data conveyed in the Pixel Data Element (7FE0,0010) may be sent either in a Native (uncompressed) Format or in an Encapsulated Format (e.g. compressed) defined outside the DICOM standard.

If Pixel Data is sent in a Native Format, the Value Representation OW is most often required. The Value Representation OB may also be used for Pixel Data in cases where Bits Allocated has a value less than or equal to 8, but only with Transfer Syntaxes where the Value Representation is explicitly conveyed (see Annex A).

Note: The DICOM default Transfer Syntax (Implicit VR Little Endian) does not explicitly convey Value Representation and therefore the VR of OB may not be used for Pixel Data when using the default Transfer Syntax.

Native format Pixel Cells are encoded as the direct concatenation of the bits of each Pixel Cell, where the most significant bit of a Pixel Cell is immediately followed by the least significant bit of the next Pixel Cell.

--`,,`-`-`,,`,,`,`,,`---

Copyright National Electrical Manufacturers Association
Provided by IHS under license with NEMA
No reproduction or networking permitted without license from IHS
Not for Resale

The number of bits of each Pixel Cell is defined by the Bits Allocated (0028,0100) Data Element Value. When a Pixel Cell crosses a word boundary in the OW case, or a byte boundary in the OB case, it shall continue to be encoded, least significant bit to most significant bit, in the next word, or byte, respectively (see Annex D). For Pixel Data encoded with the Value Representation OW, the byte ordering of the resulting 2-byte words is defined by the Little Endian or Big Endian Transfer Syntaxes negotiated at the Association Establishment (see Annex A).

Notes: 1. For Pixel Data encoded with the Value Representation OB, the Pixel Data encoding is unaffected by Little Endian or Big Endian byte ordering.

2. If encoding Pixel Data with a Value for Bits Allocated (0028,0100) not equal to 16 be sure to read and understand Annex D.

If sent in an Encapsulated Format (i.e. other than the Native Format) the Value Representation OB is used. The Pixel Cells are encoded according to the encoding process defined by one of the negotiated Transfer Syntaxes (see Annex A). The encapsulated pixel stream of encoded pixel data is segmented in one or more Fragments which convey their explicit length. The sequence of Fragments of the encapsulated pixel stream is terminated by a delimiter, thus allowing the support of encoding processes where the resulting length of the entire pixel stream is not known until it is entirely encoded. This Encapsulated Format supports both Single-Frame and Multi-Frame images (as defined in PS 3.3).

8.2.1 JPEG IMAGE COMPRESSION

DICOM provides a mechanism for supporting the use of JPEG Image Compression through the Encapsulated Format (see PS 3.3). Annex A defines a number of Transfer Syntaxes which reference the JPEG Standard and provide a number of lossless (bit preserving) and lossy compression schemes.

Note: The context where the usage of lossy compression of medical images is clinically acceptable is beyond the scope of the DICOM Standard. The policies associated with the selection of appropriate compression parameters (e.g. compression ratio) for JPEG lossy compression is also beyond the scope of this standard.

In order to facilitate interoperability of implementations conforming to the DICOM Standard which elect to use one or more of the Transfer Syntaxes for JPEG Image Compression, the following policy is specified:

— Any implementation which conforms to the DICOM Standard and has elected to support any one of the Transfer Syntaxes for lossless JPEG Image Compression, shall support the following lossless compression: The subset (first-order horizontal prediction [Selection Value 1) of JPEG Process 14 (DPCM, non-hierarchical with Huffman coding) (see Annex F).

— Any implementation which conforms to the DICOM Standard and has elected to support any one of the Transfer Syntaxes for 8-bit lossy JPEG Image Compression, shall support the JPEG Baseline Compression (coding Process 1).

— Any implementation which conforms to the DICOM Standard and has elected to support any one of the Transfer Syntaxes for 12-bit lossy JPEG Image Compression, shall support the JPEG Compression Process 4.

Note: The DICOM conformance statement shall differentiate whether or not the implementation is capable of simply receiving or receiving and processing JPEG encoded images (see PS 3.2).

The use of the DICOM Encapsulated Format to support JPEG Compressed Pixel Data requires that the Data Elements which are related to the Pixel Data encoding (e.g. Photometric Interpretation, Samples per Pixel, Planar Configuration, Bits Allocated, Bits Stored, High Bit, Pixel Representation, Rows, Columns, etc.) shall contain values which are consistent with the characteristics of the compressed data stream . The Pixel Data characteristics included in the JPEG Interchange Format shall be used to decode the compressed data stream.

Copyright National Electrical Manufacturers Association
Provided by IHS under license with NEMA
No reproduction or networking permitted without license from IHS
Not for Resale

Notes: 1. These requirements were formerly specified in terms of the "uncompressed pixel data from which the compressed data stream was derived". However, since the form of the "original" uncompressed data stream could vary between different implementations, this requirement is now specified in terms of consistency with what is encapsulated.

When decompressing, should the characteristics explicitly specified in the compressed data stream (e.g. spatial subsampling or number of components or planar configuration) be inconsistent with those specified in the DICOM Data Elements, those explicitly specified in the compressed data stream should be used to control the decompression. The DICOM data elements, if inconsistent, can be regarded as suggestions as to the form in which an uncompressed data set might be encoded.

2. Those characteristics not explicitly specified in the compressed data stream (e.g. color space which is not specified in the JPEG Interchange Format), or implied by the definition of the compression scheme (e.g. always unsigned in JPEG), can therefore be determined from the DICOM Data Element in the enclosing data set. For example a Photometric Intepretation of "YBR FULL 422" would describe the color space that is commonly used to lossy compress images using JPEG. It is unusual to use an RGB color space for lossy compression, since no advantage is taken of correlation between the red, green and blue components (e.g. of luminance), and poor compression is achieved.

3. Should the compression process be incapable of encoding a particular form of pixel data representation (e.g. JPEG cannot encode signed integers, only unsigned integers), then ideally only the appropriate form should be "fed" into the compression process. However, for certain characteristics described in DICOM Data Elements but not explicitly described in the compressed data stream (such as Pixel Representation), then the DICOM Data Element should be considered to describe what has been compressed (e.g. the pixel data really is to be interpreted as signed if Pixel Representation so specifies).

4. DICOM Data Elements should not describe characteristics that are beyond the capability of the compression scheme used. For example, JPEG lossy processes are limited to 12 bits, hence the value of Bits Stored should be 12 or less. Bits Allocated is irrelevant, and is likely to be constrained by the Information Object Definition in PS 3.3 to values of 8 or 16. Also, JPEG compressed data streams are always color-by-pixel and should be specified as such (a decoder can essentially ignore this element however as the value for JPEG compressed data is already known).

8.2.2 Run Length Encoding Compression

DICOM provides a mechanism for supporting the use of Run Length Encoding (RLE) Compression which is a byte oriented lossless compression scheme through the encapsulated Format (see PS 3.3 of this Standard). Annex G defines RLE Compression and its Transfer Syntax.

Note: The RLE Compression algorithm described in Annex G is the compression used in the TIFF 6.0 specification known as the "PackBits" scheme.

The use of the DICOM Encapsulated Format to support RLE Compressed Pixel Data requires that the Data Elements which are related to the Pixel Data encoding (e.g. Photometric Interpretation, Samples per Pixel, Planar Configuration, Bits Allocated, Bits Stored, High Bit, Pixel Representation, Rows, Columns, etc.) shall contain values which are consistent with the compressed data.

Notes: 1. These requirements were formerly specified in terms of the "uncompressed pixel data from which the compressed data was derived". However, since the form of the "original" uncompressed data stream could vary between different implementations, this requirement is now specified in terms of consistency with what is encapsulated.

2. Those characteristics not implied by the definition of the compression scheme (e.g. always color-by-plane in RLE), can therefore be determined from the DICOM Data Element in the enclosing data set. For example a Photometric Intepretation of "YBR FULL" would describe the color space that is commonly used to losslessly compress images using RLE. It is unusual to use an RGB color space for RLE compression, since no advantage is taken of correlation between the red, green and blue components (e.g. of luminance), and poor compression is achieved (note however that the conversion from RGB to YBR FULL is itself lossy. A new photometric interpretation may be proposed in the future which allows lossless conversion from RGB and also results in better RLE compression ratios).

3. DICOM Data Elements should not describe characteristics that are beyond the capability of the compression scheme used. For example, RLE compressed data streams (using the algorithm mandated in the DICOM Standard) are always color-by-plane.

Copyright National Electrical Manufacturers Association
Provided by IHS under license with NEMA
No reproduction or networking permitted without license from IHS
Not for Resale

8.2.3 JPEG-LS IMAGE COMPRESSION

DICOM provides a mechanism for supporting the use of JPEG-LS Image Compression through the Encapsulated Format (see PS 3.3). Annex A defines a number of Transfer Syntaxes which reference the JPEG-LS Standard and provide a number of lossless (bit preserving) and lossy (near-lossless) compression schemes.

Note: The context where the usage of lossy (near-lossless) compression of medical images is clinically acceptable is beyond the scope of the DICOM Standard. The policies associated with the selection of appropriate compression parameters (e.g. compression ratio) for JPEG-LS lossy (near-lossless) compression is also beyond the scope of this standard.

The use of the DICOM Encapsulated Format to support JPEG-LS Compressed Pixel Data requires that the Data Elements which are related to the Pixel Data encoding (e.g. Photometric Interpretation, Samples per Pixel, Planar Configuration, Bits Allocated, Bits Stored, High Bit, Pixel Representation, Rows, Columns, etc.) shall contain values which are consistent with the characteristics of the compressed data stream. The Pixel Data characteristics included in the JPEG-LS Interchange Format shall be used to decode the compressed data stream.

Note: See also the notes in section 8.2.1.

8.3 WAVEFORM DATA AND RELATED DATA ELEMENTS

The DICOM protocol provides for the exchange of encoded time-based signals, or waveforms, encoded in the Waveform Data Element (5400,1010).

Note: Per Section 7.6, an IOD supporting multiple sets of Waveform Data will encapsulate Data Element (5400,1010) within a Sequence.

Encoded Waveform Data of various bit depths is accommodated through the Waveform Bits Allocated (5400,1004) Data Element. This element defines the size of each waveform data sample within the Waveform Data (5400,1010). Allowed values are 8 and 16 bits.

The Value Representation of the Waveform Data (5400,1010) shall be OW; OB shall be used in cases where Waveform Bits Allocated has a value of 8, but only with Transfer Syntaxes where the Value Representation is explicitly conveyed.

Notes: 1. Under the Default Transfer Syntax, OB and OW VRs have the identical byte transfer order.

2. Conversion of a SOP Instance from the Default Transfer Syntax to an Explicit VR Transfer Syntax (uncompressed) requires the interpretation of the Waveform Bits Allocated (5400,1004) Data Element, to determine the proper VR of the Waveform Data.

The following data elements related to Waveform Data shall be encoded with the same VR as Waveform Data: Channel Minimum Value (5400,0110), Channel Maximum Value (5400,0112), Waveform Padding Value (5400,100A).

Copyright National Electrical Manufacturers Association
Provided by IHS under license with NEMA
No reproduction or networking permitted without license from IHS
Not for Resale

Section 9 Unique Identifiers (UIDs)

Unique Identifiers (UIDs) provide the capability to uniquely identify a wide variety of items. They guarantee uniqueness across multiple countries, sites, vendors and equipment. Different classes of objects, instance of objects and information entities can be distinguished from one another across the DICOM universe of discourse irrespective of any semantic context.

Note: For example the same UID value cannot be used to identify both a study instance (Study Instance UID) and a series instance (Series Instance UID) within that study or a different study. Implementers also need to be cautioned against building new UID values by derivation (for example by adding a suffix) from a UID assigned by another implementation.

The UID identification scheme is based on the OSI Object Identification (numeric form) as defined by the ISO 8824 standard. All Unique Identifiers, used within the context of the DICOM Standard, are registered values as defined by ISO 9834-3 to ensure global uniqueness. The uses of such UIDs are defined in the various Parts of the DICOM Standard.

Each UID is composed of two parts, an <org root> and a <suffix>:

UID = <org root>.<suffix>

The <org root> portion of the UID uniquely identifies an organization, (i.e., manufacturer, research organization, NEMA, etc.), and is composed of a number of numeric components as defined by ISO 8824. The <suffix> portion of the UID is also composed of a number of numeric components, and shall be unique within the scope of the <org root>. This implies that the organization identified in the <org root> is responsible for guaranteeing <suffix> uniqueness by providing registration policies. These policies shall guarantee <suffix> uniqueness for all UID's created by that organization. Unlike the <org root>, which may be common for UID's in an organization, the <suffix> shall take different unique values between different UID's that identify different objects.

The <org root> "1.2.840.10008" is reserved for DICOM defined items (such as DICOM Transfer Syntaxes) and shall not be used for privately defined items (such as an Image Instance).

Although a specific implementation may choose some particular structure for its generated UIDs, it should never assume that a UID carries any semantics. Thus, a UID shall not be "parsed" to find a particular value or component. Component definition (for the suffix) is implementation specific and may change as long as uniqueness is maintained. Parsing UID's may jeopardize the ability to inter-operate as implementations evolve.

Example of UID structure is given in Annex C.

9.1 UID ENCODING RULES

The DICOM UID encoding rules are defined as follows:

— Each component of a UID is a number and shall consist of one or more digits. The first digit of each component shall not be zero unless the component is a single digit.

Note: Registration authorities may distribute components with non-significant leading zeroes. The leading zeroes should be ignored when being encoded (ie. "00029" would be encoded "29").

— Each component numeric value shall be encoded using the characters 0-9 of the Basic G0 Set of the International Reference Version of ISO 646:1990 (the DICOM default character repertoire).

— Components shall be separated by the character "." (2EH).

Copyright National Electrical Manufacturers Association
Provided by IHS under license with NEMA
No reproduction or networking permitted without license from IHS
Not for Resale

— If ending on an odd byte boundary, except when used for network negotiation (See PS 3.8), one trailing NULL (00H), as a padding character, shall follow the last component in order to align the UID on an even byte boundary.

— UID's, shall not exceed 64 total characters, including the digits of each component, separators between components, and the NULL (00H) padding character if needed.

9.2 UNIQUE IDENTIFIER REGISTRATION

Each UID used in DICOM shall be defined and registered in one of the following two ways:

— DICOM defined and registered UID's

— Privately defined and registered UID's

Both UIDs use the same encoding rules as defined in Section 9.1. See Annex C for a more detailed description of the UID registration process.

9.2.1 DICOM DEFINED AND REGISTERED UNIQUE IDENTIFIERS

A limited number of registered DICOM Defined UIDs are used within the DICOM Standard. The organization responsible for the definition and registration of such DICOM UIDs is NEMA.

The registration process will rely on the publication of the DICOM Registered UIDs in PS 3.6.

9.2.2 PRIVATELY DEFINED UNIQUE IDENTIFIERS

Privately Defined UIDs are commonly used within DICOM. However, such UIDs will not be registered by NEMA. Organizations that define private UIDs are responsible for properly registering their UIDs (at least obtain a registered <Org Root>) as defined for OSI Object Identifiers (ISO 9834-3). The private organization defining the UID shall accept the responsibility of ensuring its uniqueness.

Copyright National Electrical Manufacturers Association
Provided by IHS under license with NEMA
No reproduction or networking permitted without license from IHS
Not for Resale

Section 10 Transfer Syntax

A Transfer Syntax is a set of encoding rules able to unambiguously represent one or more Abstract Syntaxes. In particular, it allows communicating Application Entities to negotiate common encoding techniques they both support (e.g., byte ordering, compression, etc.). A Transfer Syntax is an attribute of a Presentation Context, one or more of which are negotiated at the establishment of an Association between DICOM Application Entities. This Association negotiation is specified in PS 3.8 and discussed in PS 3.7.

The selection of a Transfer Syntax applies to the encoding rules for the Data Set portion of a DICOM Message only. All DICOM Standard and Private Transfer Syntaxes implicitly specify a fixed encoding for the Command Set portion of a DICOM Message as Specified in PS 3.7.

This part of the DICOM Standard defines standard DICOM Transfer Syntaxes and assigns a unique Transfer Syntax Name to each one. The standard DICOM Transfer Syntaxes are specified in Annex A. The DICOM notation for Transfer Syntax names is the notation used for UIDs (see Section 9).

The organization responsible for the definition and registration of DICOM Transfer Syntaxes is NEMA. NEMA guarantees uniqueness for all DICOM Transfer Syntax Names.

Privately defined Transfer Syntax Names may also be used; however, they will not be registered by NEMA. Organizations that define private Transfer Syntax Names shall follow the registration process defined in Section 9.2.

10.1 DICOM DEFAULT TRANSFER SYNTAX

DICOM defines a default Transfer Syntax, the DICOM Implicit VR Little Endian Transfer Syntax (UID = "1.2.840.10008.1.2"), that shall be supported by every conformant DICOM Implementation. This implies that:

a) If an Application Entity issues an A-ASSOCIATE request, it shall offer the DICOM Implicit VR Little Endian Transfer Syntax in at least one of the Presentation Contexts associated with each offered Abstract Syntax.

Note: Offering Abstract Syntax (AS1) in two Presentation Contexts with Transfer Syntaxes (TS1) and (TS2) is not valid, but offering AS1-TS1, AS1-TS2 and AS1-TSD is valid because the DICOM Default Little Endian Transfer Syntax (TSD) is present in at least one of the Presentation Contexts which are based on Abstract Syntax (AS1).

b) If an Application Entity receives an A-ASSOCIATE indication corresponding to a request which follows the requirements specified in Section 10.1 a), every Presentation Context related to a given Abstract Syntax cannot be rejected in an A-ASSOCIATE response for the reason that none of the Transfer Syntaxes are supported.

Both of these requirements, a) and b), are waived when the Application Entity sending the pixel data has only access to the pixel data in lossy compressed form.

10.2 TRANSFER SYNTAX FOR A DICOM DEFAULT OF LOSSLESS JPEG COMPRESSION

DICOM defines a default for lossless JPEG Image Compression, which uses a subset of coding Process 14 with a first-order prediction (Selection Value 1). It is identified by Transfer Syntax UID = "1.2.840.10008.1.2.4.70" and shall be supported by every DICOM implementation that chooses to support one or more of the lossless JPEG compression processes. This implies that:

a) If an Application Entity issues an A-ASSOCIATE request where any offered Abstract Syntaxes is associated in one or more Presentation Context with a JPEG lossless compression Transfer Syntax, at least one of the Presentation Contexts which include this Abstract Syntax, shall

Copyright National Electrical Manufacturers Association
Provided by IHS under license with NEMA
No reproduction or networking permitted without license from IHS
Not for Resale

include the DICOM Default Lossless JPEG Compression Transfer Syntax and the DICOM Default Transfer Syntax (uncompressed).

Note: Offering Abstract Syntax (AS1) in two Presentation Contexts with Transfer Syntaxes JPEG lossless (JL1) and (JL2) is not valid, but offering AS1-JL1, AS1-JL2, AS1-TSD, and AS1-JLD is valid because the DICOM Default JPEG Lossless Transfer Syntax (JLD) and the DICOM Default Transfer Syntax (TSD) are present in at least one of the Presentation Contexts which are based on Abstract Syntax (AS1).

b) If an Application Entity that supports one or more lossless JPEG Transfer Syntax receives an A-ASSOCIATE indication corresponding to a request which follows the requirements specified in Section 10.2 a), every Presentation Context related to a given Abstract Syntax cannot be rejected in an A-ASSOCIATE response for the reason that the DICOM Default lossless JPEG Transfer Syntax is not supported.

10.3 TRANSFER SYNTAXES FOR A DICOM DEFAULTS OF LOSSY JPEG COMPRESSION

DICOM defines defaults for Lossy JPEG Image Compression, one for 8-bit images and the other for 12-bit images. JPEG coding Process 1 (identified by Transfer Syntax UID = "1.2.840.10008.1.2.4.50") is used for 8-bit images. JPEG coding Process 4 (identified by Transfer Syntax UID = "1.2.840.10008.1.2.4.51") is used for 12-bit images. This implies that:

a) If an Application Entity issues an A-ASSOCIATE request where any offered Abstract Syntaxes is associated in one or more Presentation Context(s) with a JPEG lossy compression Transfer Syntax, at least one of the Presentation Contexts which include this Abstract Syntax, shall include the appropriate DICOM Default Lossy JPEG Compression Transfer Syntax.

Note: 1. Offering Abstract Syntax (AS1) in two Presentation Contexts with Transfer Syntaxes JPEG lossy (JL1) and (JL2) is not valid, but offering AS1-JL1, AS1-JL2 and AS1-JLD is valid because the DICOM Default JPEG Lossy Transfer Syntax (JLD) is present in at least one of the Presentation Contexts which are based on Abstract Syntax (AS1).
2. The DICOM Default Transfer Syntax (uncompressed) may be offered if the sender has access to the original pixel data in an uncompressed or lossless compressed form.

b) If an Application Entity that supports one or more Lossy JPEG Transfer Syntaxes receives an A-ASSOCIATE indication corresponding to a request which follows the requirements specified in Section 10.3 a), every Presentation Context related to a given Abstract Syntax cannot be rejected in an A-ASSOCIATE response for the reason that the DICOM Default lossy JPEG Transfer Syntax is not supported.

10.4 TRANSFER SYNTAX FOR DICOM RLE COMPRESSION

DICOM defines the RLE Compression (see Annex G). This implies that:

a) If an Application Entity issues an A-ASSOCIATE request where any offered Abstract Syntaxes is associated in one or more Presentation Contexts(s) with RLE compression Transfer Syntax, at least one of the Presentation Contexts which include this Abstract Syntax, shall include the DICOM Default Transfer Syntax (uncompressed).

10.5 TRANSFER SYNTAX FOR A DICOM DEFAULT OF LOSSLESS AND LOSSY (NEAR-LOSSLESS) JPEG-LS COMPRESSION

One Transfer Syntax is specified for JPEG-LS Lossless Image Compression, and one Transfer Syntax is specified for JPEG-LS Lossy (Near-Lossless) Image Compression. The JPEG-LS Lossless Transfer Syntax shall be supported as a baseline if the JPEG-LS Lossy (Near-Lossless) Transfer Syntax is supported.

Copyright National Electrical Manufacturers Association
Provided by IHS under license with NEMA
No reproduction or networking permitted without license from IHS
Not for Resale

Annex A
(Normative)
Transfer Syntax Specifications

A.1 DICOM IMPLICIT VR LITTLE ENDIAN TRANSFER SYNTAX

This Transfer Syntax applies to the encoding of the entire DICOM Data Set. This implies that when a DICOM Data Set is being encoded with the DICOM Implicit VR Little Endian Transfer Syntax the following requirements shall be met:

a) The Data Elements contained in the Data Set structure shall be encoded with Implicit VR (without a VR Field) as specified in Section 7.1.3.

b) The encoding of the overall Data Set structure (Data Element Tags, Value Length, and Value) shall be in Little Endian as specified in Section 7.3.

c)The encoding of the Data Elements of the Data Set shall be as follows according to their Value Representations:

- For all Value Representations defined in this part, except for the Value Representations OB and OW, the encoding shall be in Little Endian as specified in Section 7.3.
- For the Value Representations OB and OW, the encoding shall meet the following specification depending on the Data Element Tag:
  - Data Element (7FE0,0010) Pixel Data has the Value Representation OW and shall be encoded in Little Endian.
  - Data Element (60xx,3000) Overlay Data has the Value Representation OW and shall be encoded in Little Endian.
  - Data Element (50xx,3000) Curve Data has the Value Representation OB with its component points (n-tuples) having the Value Representation specified in Data Value Representation (50xx,0103). The component points shall be encoded in Little Endian.
  - Data Element (5400,1010) Waveform Data shall have Value Representation OW and shall be encoded in Little Endian.
  - Data Element (50xx,200C) Audio Sample Data has the Value Representation OB when Audio Sample Format (50xx,2002) specifies 8-bit values, and OW encoded in Little Endian when 16 bit values are specified. See the specification of the Audio Module in PS 3.3.
  - Data Elements (0028,1201), (0028,1202),(0028,1203) Red, Green, Blue Palette Lookup Table Data have the Value Representation OW and shall be encoded in Little Endian.

    Note: Previous versions of the Standard either did not specify the encoding of these Data Elements in this Part, but specified a VR of US or SS in PS 3.6 (1993), or specified OW in this Part but a VR of US, SS or OW in PS 3.6 (1996). The actual encoding of the values and their byte order would be identical in each case.
  - Data Elements (0028,1101), (0028,1102),(0028,1103) Red, Green, Blue Palette Lookup Table Descriptor have the Value Representation SS or US (depending on rules specified in the IOD in PS 3.3), and shall be encoded in Little Endian. The first and third values are always interpreted as unsigned, regardless of the Value Representation.
  - Data Elements (0028,1221),(0028,1222),(0028,1223) Segmented Red, Green, Blue Palette Color Lookup table Data have the Value Representation OW and shall be encoded in Little Endian.

Copyright National Electrical Manufacturers Association
Provided by IHS under license with NEMA
No reproduction or networking permitted without license from IHS
Not for Resale

- Data Element (0028,3006) Lookup Table Data has the Value Representation US, SS or OW and shall be encoded in Little Endian.

  Note: Previous versions of the Standard did not specify the encoding of these Data Elements in this Part, but specified a VR of US or SS in PS 3.6 (1998). A VR of OW has been added to support explicit VR transfer syntaxes. The actual encoding of the values and their byte order would be identical in each case.

- Data Element (0028,3002) Lookup Table Descriptor has the Value Representation SS or US (depending on rules specified in the IOD in PS 3.3), and shall be encoded in Little Endian. The first and third values are always interpreted as unsigned, regardless of the Value Representation.

This DICOM Implicit VR Little Endian Transfer Syntax shall be identified by a UID of Value "1.2.840.10008.1.2."

A.2 DICOM LITTLE ENDIAN TRANSFER SYNTAX (EXPLICIT VR)

This Transfer Syntax applies to the encoding of the entire DICOM Data Set. This implies that when a DICOM Data Set is being encoded with the DICOM Little Endian Transfer Syntax the following requirements shall be met:

a) The Data Elements contained in the Data Set structure shall be encoded with Explicit VR (with a VR Field) as specified in Section 7.1.2.

b) The encoding of the overall Data Set structure (Data Element Tags, Value Length, and Value) shall be in Little Endian as specified in Section 7.3.

c)The encoding of the Data Elements of the Data Set shall be as follows according to their Value Representations:

- For all Value Representations defined in this part, except for the Value Representations OB and OW, the encoding shall be in Little Endian as specified in Section 7.3.
- For the Value Representations OB and OW, the encoding shall meet the following specification depending on the Data Element Tag:
  - Data Element (7FE0,0010) Pixel Data
    - where Bits Allocated (0028,0100) has a value greater than 8 shall have Value Representation OW and shall be encoded in Little Endian;
    - where Bits Allocated (0028,0100) has a value less than or equal to 8 shall have the Value Representation OB or OW and shall be encoded in Little Endian.
  - Data Element (60xx,3000) Overlay Data
    - shall have the Value Representation OB or OW and shall be encoded in Little Endian.

      Note: Previous versions of the Standard specified that the choice of OB or OW VR was based on whether or not Overlay Bits Allocated (60xx,0100) was greater than, or less than or equal to, 8. However, since only one bit plane can be encoded in each Overlay Data Element (60xx,3000), no value of Overlay Bits Allocated other than 1 makes sense. Such a restriction is now present in PS 3.3.

  - Data Element (50xx,3000) Curve Data has the Value Representation specified in its Explicit VR Field. See the specification of the Curve Data Module in PS 3.3 for the enumerated list of allowable VRs. The component points shall be encoded in Little Endian.
  - Data Element (5400,1010) Waveform Data has the Value Representation specified in its Explicit VR Field. The component points shall be encoded in Little Endian.
  - Data Element (50xx,200C) Audio Sample Data has the Value Representation OB when Audio Sample Format (50xx,2002) specifies 8-bit values, and OW encoded in Little

Copyright National Electrical Manufacturers Association
Provided by IHS under license with NEMA
No reproduction or networking permitted without license from IHS
Not for Resale

Endian when 16 bit values are specified. See the specification of the Audio Module in PS 3.3.

— Data Elements (0028,1201), (0028,1202), (0028,1203) Red, Green, Blue Palette Lookup Table Data have the Value Representation OW and shall be encoded in Little Endian.

Note: Previous versions of the Standard either did not specify the encoding of these Data Elements in this Part, but specified a VR of US or SS in PS 3.6 (1993), or specified OW in this Part but a VR of US, SS or OW in PS 3.6 (1996). The actual encoding of the values and their byte order would be identical in each case, though the explicitly encoded VR field would be different. However, an explicit VR of US or SS cannot be used to encode a table of 2^{16} elements, since the Value Length is restricted to 16 bits.

— Data Elements (0028,1101), (0028,1102),(0028,1103) Red, Green, Blue Palette Lookup Table Descriptor have the Value Representation SS or US (depending on rules specified in the IOD in PS 3.3), and shall be encoded in Little Endian. The first and third values are always interpreted as unsigned, regardless of the Value Representation.

— Data Elements (0028,1221), (0028,1222), (0028,1223) Segmented Red, Green, Blue Palette Color Lookup table Data have the Value Representation OW and shall be encoded in Little Endian.

— Data Element (0028,3006) Lookup Table Data has the Value Representation US, SS or OW and shall be encoded in Little Endian.

Note: Previous versions of the Standard did not specify the encoding of these Data Elements in this Part, but specified a VR of US or SS in PS 3.6 (1998). However, an explicit VR of US or SS cannot be used to encode a table of 2^{16} elements, since the Value Length is restricted to 16 bits. Hence a VR of OW has been added. The actual encoding of the values and their byte order would be identical in each case, though the explicitly encoded VR field would be different.

— Data Element (0028,3002) Lookup Table Descriptor has the Value Representation SS or US (depending on rules specified in the IOD in PS 3.3), and shall be encoded in Little Endian. The first and third values are always interpreted as unsigned, regardless of the Value Representation.

Note: For Data encoded with the Value Representation OB, the Data encoding is unaffected by Little Endian or Big Endian byte ordering.

This DICOM Explicit VR Little Endian Transfer Syntax shall be identified by a UID of Value "1.2.840.10008.1.2.1."

A.3 DICOM BIG ENDIAN TRANSFER SYNTAX (EXPLICIT VR)

This Transfer Syntax applies to the encoding of the entire DICOM Data Set. This implies that when a DICOM Data Set is being encoded with the DICOM Big Endian Transfer Syntax the following requirements shall be met:

a) The Data Elements contained in the Data Set structure shall be encoded with Explicit VR (with a VR Field) as specified in Section 7.1.2.

b) The encoding of the overall Data Set structure (Data Element Tags, Value Length, and Value) shall be in Big Endian as specified in Section 7.3.

c)The encoding of the Data Elements of the Data Set shall be as follows according to their Value Representations:

— For all Value Representations defined in this part, except for the Value Representations OB and OW, the encoding shall be in Big Endian as specified in Section 7.3.

— For the Value Representations OB and OW, the encoding shall meet the following specification depending on the Data Element Tag:

Copyright National Electrical Manufacturers Association
Provided by IHS under license with NEMA
No reproduction or networking permitted without license from IHS
Not for Resale

- Data Element (7FE0,0010) Pixel Data
  - where Bits Allocated (0028,0100) has a value greater than 8 shall have Value Representation OW and shall be encoded in Big Endian;
  - where Bits Allocated (0028,0100) has a value less than or equal to 8 shall have the Value Representation OB or OW and shall be encoded in Big Endian.
- Data Element (60xx,3000) Overlay Data
  - shall have the Value Representation OB or OW and shall be encoded in Big Endian.

    Note: Previous versions of the Standard specified that the choice of OB or OW VR was based on whether or not Overlay Bits Allocated (60xx,0100) was greater than, or less than or equal to, 8. However, since only one bit plane can be encoded in each Overlay Data Element (60xx,3000), no value of Overlay Bits Allocated other than 1 makes sense. Such a restriction is now present in PS 3.3.

- Data Element (50xx,3000) Curve Data has the Value Representation specified in its Explicit VR Field. See the specification of the Curve Data Module in PS 3.3 for the enumerated list of allowable VRs. The component points shall be encoded in Big Endian.
- Data Element (5400,1010) Waveform Data has the Value Representation specified in its Explicit VR Field. The component points shall be encoded in Big Endian.
- Data Element (50xx,200C) Audio Sample Data has the Value Representation OB when Audio Sample Format (50xx,2002) specifies 8-bit values, and OW encoded in Big Endian when 16 bit values are specified. See the specification of the Audio Module in PS 3.3.
- Data Elements (0028,1201), (0028,1202), (0028,1203) Red, Green, Blue Palette Lookup Table Data have the Value Representation OW and shall be encoded in Big Endian.

  Note: Previous versions of the Standard either did not specify the encoding of these Data Elements in this Part, but specified a VR of US or SS in PS 3.6 (1993), or specified OW in this Part but a VR of US, SS or OW in PS 3.6 (1996). The actual encoding of the values and their byte order would be identical in each case, though the explicitly encoded VR field would be different. However, an explicit VR of US or SS cannot be used to encode a table of 2^{16} elements, since the Value Length is restricted to 16 bits.
- Data Elements (0028,1101), (0028,1102),(0028,1103) Red, Green, Blue Palette Lookup Table Descriptor have the Value Representation SS or US (depending on rules specified in the IOD in PS 3.3), and shall be encoded in Big Endian. The first and third values are always interpreted as unsigned, regardless of the Value Representation.
- Data Elements (0028,1221), (0028,1222), (0028,1223) Segmented Red, Green, Blue Palette Color Lookup table Data have the Value Representation OW and shall be encoded in Big Endian.
- Data Element (0028,3006) Lookup Table Data has the Value Representation US, SS or OW and shall be encoded in Big Endian.

  Note: Previous versions of the Standard did not specify the encoding of these Data Elements in this Part, but specified a VR of US or SS in PS 3.6 (1998). However, an explicit VR of US or SS cannot be used to encode a table of 2^{16} elements, since the Value Length is restricted to 16 bits. Hence a VR of OW has been added. The actual encoding of the values and their byte order would be identical in each case, though the explicitly encoded VR field would be different.
- Data Element (0028,3002) Lookup Table Descriptor has the Value Representation SS or US (depending on rules specified in the IOD in PS 3.3), and shall be encoded in Big Endian. The first and third values are always interpreted as unsigned, regardless of the Value Representation.

Note: For Data encoded with the Value Representation OB, the Data encoding is unaffected by Little Endian or Big Endian byte ordering.

Copyright National Electrical Manufacturers Association
Provided by IHS under license with NEMA
No reproduction or networking permitted without license from IHS
Not for Resale

This DICOM Explicit VR Big Endian Transfer Syntax shall be identified by a UID of Value "1.2.840.10008.1.2.2."

A.4 TRANSFER SYNTAXES FOR ENCAPSULATION OF ENCODED PIXEL DATA

These Transfer Syntaxes apply to the encoding of the entire DICOM Data Set, even though the image Pixel Data (7FE0,0010) portion of the DICOM Data Set is the only portion that is encoded by an encapsulated format. This implies that when a DICOM Message is being encoded according to an encapsulation Transfer Syntax the following requirements shall be met:

a) The Data Elements contained in the Data Set structure shall be encoded with Explicit VR (with a VR Field) as specified in Section 7.1.2.

b) The encoding of the overall Data Set structure (Data Element Tags, Value Length, etc.) shall be in Little Endian as specified in Section 7.3.

c)The encoding of the Data Elements of the Data Set shall be as follows according to their Value Representations:

— For all Value Representations defined in this part of the DICOM Standard, except for the Value Representations OB and OW, the encoding shall be in Little Endian as specified in Section 7.3.

— For the Value Representations OB and OW, the encoding shall meet the following specification depending on the Data Element Tag:

  — Data Element (7FE0,0010) Pixel Data may be encapsulated or native.

    It shall be encapsulated if present in the top-level Data Set (i.e. not nested within a Sequence Data Element).

    Note: The distinction between fixed value length (native) and undefined value length (encapsulated) is present so that the top level data set Pixel Data can be compressed (and hence encapsulated), but the Pixel Data within an Icon Image Sequence may or may not be compressed.

    If native, it shall have a defined Value Length, and be encoded as follows:

    — where Bits Allocated (0028,0100) has a value greater than 8 shall have Value Representation OW and shall be encoded in Little Endian;

    — where Bits Allocated (0028,0100) has a value less than or equal to 8 shall have the Value Representation OB or OW and shall be encoded in Little Endian.

    Note: That is, as if the transfer syntax were Explicit VR Little Endian.

    If encapsulated, it has the Value Representation OB and is a sequence of bytes resulting from one of the encoding processes. It contains the encoded pixel data stream fragmented into one or more Item(s). This Pixel Data Stream may represent a Single or Multi-frame Image. See Tables A.4-1 and A.4-2:

    — The Length of the Data Element (7FE0,0010) shall be set to the Value for Undefined Length (FFFFFFFFH).

    — Each Data Stream Fragment encoded according to the specific encoding process shall be encapsulated as a DICOM Item with a specific Data Element Tag of Value (FFFE,E000). The Item Tag is followed by a 4 byte Item Length field encoding the explicit number of bytes of the Item.

    — All items containing an encoded fragment shall be made of an even number of bytes greater or equal to two. The last fragment of a frame may be padded, if necessary, to meet the sequence item format requirements of the DICOM Standard.

Notes: 1. Any necessary padding may be added in the JPEG or JPEG-LS compressed data stream as per ISO 10918-1 and ISO 14495-1 such that the End of Image (EOI) marker ends on an even byte boundary, or may be appended after the EOI marker, depending on the implementation.

Copyright National Electrical Manufacturers Association
Provided by IHS under license with NEMA
No reproduction or networking permitted without license from IHS
Not for Resale

2. ISO 10918-1 and ISO 14495-1 define the ability to add any number of padding bytes FFH before any marker (all of which also begin with FFH). It is strongly recommended that FFH padding bytes not be added before the Start of Image (SOI) marker.

- The first Item in the Sequence of Items before the encoded Pixel Data Stream shall be a Basic Offset Table item. The Basic Offset Table Item Value, however, is not required to be present:
  - When the Item Value is not present, the Item Length shall be zero (00000000H) (see Table A.4-1).
  - When the Item Value is present, the Basic Offset Table Item Value shall contain concatenated 32-bit unsigned integer values that are byte offsets to the first byte of the Item Tag of the first fragment for each frame in the Sequence of Items. These offsets are measured from the first byte of the first Item Tag following the Basic Offset Table item (See Table A.4-2).

Note: For a Multi-Frame Image containing only one frame or a Single Frame Image, the Basic Offset Table Item Value may be present or not. If present it will contain a single 00000000H value.

- This Sequence of Items is terminated by a Sequence Delimiter Item with the Tag (FFFE,E0DD) and an Item Length Field of Value (00000000H) (i.e., no Value Field shall be present).

- Data Element (60xx,3000) Overlay Data
  - shall have the Value Representation OB or OW and shall be encoded in Little Endian.
- Data Element (50xx,3000) for Curve Data has the Value Representation specified in its Explicit VR Field. See the specification of the Curve Data Module in PS 3.3 for the enumerated list of allowable VRs. The component points shall be encoded in Little Endian.
- Data Element (5400,1010) Waveform Data has the Value Representation specified in its Explicit VR Field. The component points shall be encoded in Little Endian.
- Data Element (50xx,200C) Audio Sample Data has the Value Representation OB when Audio Sample Format (50xx,2002) specifies 8-bit values, and OW encoded in Little Endian when 16 bit values are specified. See the specification of the Audio Module in PS 3.3.
- Data Elements (0028,1201), (0028,1202), (0028,1203) Red, Green, Blue Palette Lookup Table Data have the Value Representation OW and shall be encoded in Little Endian.

  Note: Previous versions of the Standard either did not specify the encoding of these Data Elements in this Part, but specified a VR of US or SS in PS 3.6 (1993), or specified OW in this Part but a VR of US, SS or OW in PS 3.6 (1996). The actual encoding of the values and their byte order would be identical in each case, though the explicitly encoded VR field would be different. However, an explicit VR of US or SS cannot be used to encode a table of 2^{16} elements, since the Value Length is restricted to 16 bits.
- Data Elements (0028,1101), (0028,1102),(0028,1103) Red, Green, Blue Palette Lookup Table Descriptor have the Value Representation SS or US (depending on rules specified in the IOD in PS 3.3), and shall be encoded in Little Endian. The first and third values are always interpreted as unsigned, regardless of the Value Representation.
- Data Elements (0028,1221), (0028,1222), (0028,1223) Segmented Red, Green, Blue Palette Color Lookup table Data have the Value Representation OW and shall be encoded in Little Endian.

Copyright National Electrical Manufacturers Association
Provided by IHS under license with NEMA
No reproduction or networking permitted without license from IHS
Not for Resale

— Data Element (0028,3006) Lookup Table Data has the Value Representation US, SS or OW and shall be encoded in Little Endian.

Note: Previous versions of the Standard did not specify the encoding of these Data Elements in this Part, but specified a VR of US or SS in PS 3.6 (1998). However, an explicit VR of US or SS cannot be used to encode a table of 2^{16} elements, since the Value Length is restricted to 16 bits. Hence a VR of OW has been added. The actual encoding of the values and their byte order would be identical in each case, though the explicitly encoded VR field would be different.

— Data Element (0028,3002) Lookup Table Descriptor has the Value Representation SS or US (depending on rules specified in the IOD in PS 3.3), and shall be encoded in Little Endian. The first and third values are always interpreted as unsigned, regardless of the Value Representation.

Note: For Data encoded with the Value Representation OB, the Data encoding is unaffected by Little Endian or Big Endian byte ordering.

Copyright National Electrical Manufacturers Association
Provided by IHS under license with NEMA
No reproduction or networking permitted without license from IHS
Not for Resale

Table A.4-1
EXAMPLE FOR ELEMENTS OF AN ENCODED SINGLE-FRAME IMAGE DEFINED AS A SEQUENCE OF THREE FRAGMENTS WITHOUT BASIC OFFSET TABLE ITEM VALUE

Pixel Data Element Tag	**Value Representation**		**Data Element Length**	**Data Element**				
				Basic Offset Table with NO Item Value		First Fragment (Single Frame) of Pixel Data		
				Item Tag	Item Length	Item Tag	Item Length	Item Value
(7FE0, 0010) with VR of OB	OB	0000H Reserved	FFFF FFFFH undefined length	(FFFE, E000)	0000 0000H	(FFFE, E000)	0000 04C6H	Compressed Fragment
4 bytes	2 bytes	2 bytes	4 bytes	4 bytes	4 bytes	4 bytes	4 bytes	04C6H bytes

Data Element Continued							
Second Fragment (Single Frame) of Pixel Data			Third Fragment (Single Frame) of Pixel Data			Sequence Delimiter Item	
Item Tag	Item Length	Item Value	Item Tag	Item Length	Item Value	Sequence Delim. Tag	Item Length
(FFFE, E000)	0000 024AH	Compressed Fragment	(FFFE, E000)	0000 0628H	Compressed Fragment	(FFFE, E0DD)	0000 000H
4 bytes	4 bytes	024AH bytes	4 bytes	4 bytes	0628H bytes	4 bytes	4 bytes

Copyright National Electrical Manufacturers Association
Provided by IHS under license with NEMA
No reproduction or networking permitted without license from IHS
Not for Resale

Table A.4-2
EXAMPLES OF ELEMENTS FOR AN ENCODED TWO-FRAME IMAGE DEFINED AS A SEQUENCE OF THREE FRAGMENTS WITH BASIC TABLE ITEM VALUES

Pixel Data Element Tag	Value Representation		Data Element Length	Data Element					
				Basic Offset Table with Item Value			First Fragment (Frame 1) of Pixel Data		
				Item Tag	Item Length	Item Value	Item Tag	Item Length	Item Value
(7FE0, 0010) with VR of OB	OB	0000H Reserved	FFFF FFFFH undefined length	(FFFE, E000)	0000 0008H	0000 0000H 0000 0646H	(FFFE, E000)	0000 02C8H	Compressed *Fragment*
4 bytes	2 bytes	2 bytes	4 bytes	4 bytes	4 bytes	0008H bytes	4 bytes	4 bytes	02C8H bytes

Data Element Continued							
Second Fragment (Frame 1) of Pixel Data			Third Fragment (Frame 2) of Pixel Data			Sequence Delimiter Item	
Item Tag	Item Length	Item Value	Item Tag	Item Length	Item Value	Sequence Delimiter Tag	Item Length
(FFFE, E000)	0000 036EH	Compressed Fragment	(FFFE, E000)	0000 0BC8H	Compressed Fragment	(FFFE, E0DD)	0000 0000H
4 bytes	4 bytes	036EH bytes	4 bytes	4 bytes	0BC8H bytes	4 bytes	4 bytes

A.4.1 JPEG IMAGE COMPRESSION

The International Standards Organization ISO/IEC JTC1 has developed an International Standard, ISO/IS-10918-1 (JPEG Part 1) and an International Draft Standard, ISO/IS-10918-2 (JPEG Part 2), known as the JPEG Standard, for digital compression and coding of continuous-tone still images. (See Annex F for further details.)

A DICOM Transfer Syntax for JPEG Image Compression shall be identified by a UID value, appropriate to its JPEG coding process, chosen from Table A.4-3.

Copyright National Electrical Manufacturers Association
Provided by IHS under license with NEMA
No reproduction or networking permitted without license from IHS
Not for Resale

Table A.4-3
DICOM TRANSFER SYNTAX UIDS FOR JPEG

DICOM Transfer Syntax UID	JPEG coding process	JPEG description
1.2.840.10008.1.2.4.50	1	baseline
1.2.840.10008.1.2.4.51	2(8-bit),4(12-bit)	extended
1.2.840.10008.1.2.4.52	3(8-bit),5(12-bit)	extended
1.2.840.10008.1.2.4.53	6(8-bit),8(12-bit)	spectral selection, non-hierarchical
1.2.840.10008.1.2.4.54	7(8-bit),9(12-bit)	spectral selection, non-hierarchical
1.2.840.10008.1.2.4.55	10(8-bit),12(12-bit)	full progression, non-hierarchical
1.2.840.10008.1.2.4.56	11(8-bit),13(12-bit)	full progression, non-hierarchical
1.2.840.10008.1.2.4.57	14	lossless, non-hierarchical
1.2.840.10008.1.2.4.58	15	lossless, non-hierarchical
1.2.840.10008.1.2.4.59	16(8-bit),18(12-bit)	extended, hierarchical
1.2.840.10008.1.2.4.60	17(8-bit),19(12-bit)	extended, hierarchical
1.2.840.10008.1.2.4.61	20(8-bit),22(12-bit)	spectral selection, hierarchical
1.2.840.10008.1.2.4.62	21(8-bit),23(12-bit)	spectral selection, hierarchical
1.2.840.10008.1.2.4.63	24(8-bit),26(12-bit)	full progression, hierarchical
1.2.840.10008.1.2.4.64	25(8-bit),27(12-bit)	full progression, hierarchical
1.2.840.10008.1.2.4.65	28	lossless, hierarchical
1.2.840.10008.1.2.4.66	29	lossless, hierarchical
1.2.840.10008.1.2.4.70	14 (Selection Value 1)	lossless, non-hierarchical, first-order prediction

Note: DICOM identifies, to increase the likelihood of successful association, three Transfer Syntaxes for Default JPEG Compression Image processes (see Sections 8.2.1 and 10).

If the object allows multi-frame images in the pixel data field, then each frame shall be encoded separately. Each fragment shall contain encoded data from a single-frame image.

For all images, including all frames of a multi-frame image, the JPEG Interchange Format shall be used (the table specification shall be included).

If images with Photometric Interpretation (0028,0004) YBR_FULL_422 or YBR_PARTIAL_422, are encoded with JPEG coding Process 1 (non hierarchical with Huffman coding), identified by DICOM Transfer Syntax UID 1.2.840.10008.1.2.4.50 the minimum compressible unit is YYC_BC_R, where Y, C_B, and C_R are 8 by 8 blocks of pixel values. The data stream encodes two Y blocks followed by the corresponding C_B and C_R blocks.

A.4.2 RLE COMPRESSION

Annex G defines a RLE Compression Transfer Syntax. This transfer Syntax is identified by the UID value 1.2.840.10008.1.2.5. If the object allows multi-frame images in the pixel data field, then each frame shall be encoded separately. Each frame shall be encoded in one and only one Fragment (see PS 3.5.8.2).

A.4.3 JPEG-LS IMAGE COMPRESSION

The International Standards Organization ISO/IEC JTC1 has developed an International Standard, ISO/IS-14495-1 (JPEG-LS Part 1), for digital compression and coding of continuous-tone still images. (See Annex F for further details.)

A DICOM Transfer Syntax for JPEG-LS Image Compression shall be identified by a UID value, appropriate to its JPEG-LS coding process.

Two Transfer Syntaxes are specified for JPEG-LS:

Copyright National Electrical Manufacturers Association
Provided by IHS under license with NEMA
No reproduction or networking permitted without license from IHS
Not for Resale

1. A Transfer Syntax with a UID of1.2.840.10008.1.2.4.80, which specifies the use of the lossless mode of JPEG-LS. In this mode the absolute error between the source and reconstructed images will be zero.
2. A Transfer Syntax with a UID of1.2.840.10008.1.2.4.81, which specifies the use of the near-lossless mode of JPEG-LS. In this mode, the absolute error between the source and reconstructed images will be constrained to a finite value that is conveyed in the compressed bit stream. Note that this process can, at the discretion of the encoder, be used to compress images with an error constrained to a value of zero, resulting in no loss of information.

If the object allows multi-frame images in the pixel data field, then each frame shall be encoded separately. Each fragment shall contain encoded data from a single-frame image.

For all images, including all frames of a multi-frame image, the JPEG-LS Interchange Format shall be used (all parameter specifications shall be included).

A.5 DICOM DEFLATED LITTLE ENDIAN TRANSFER SYNTAX (EXPLICIT VR)

This Transfer Syntax applies to the encoding of the entire DICOM Data Set.

The entire Data Set is first encoded according to the rules specified in Section A.2 DICOM Little Endian Transfer Syntax (Explicit VR).

The entire byte stream is then compressed using the "Deflate" algorithm defined in Internet RFC 1951.

Notes: 1. The Pixel Data (7FE0,0010) is not handled in any special manner. The pixel data is first encoded as sequential uncompressed frames without encapsulation, and then is handled as part of the byte stream fed to the "defalte" compressor in the same manner as the value of any other attribute.

2. This transfer syntax is particularly useful for compression of objects without pixel data, such as structured reports. It is not particularly effective at image compression, since any benefit obtained from compressing the non-pixel data is offset by less effective compression of the much larger pixel data.

3. A freely available reference implementation of the "deflate" compressor may be found in the zlib package which may be downloaded from ftp://ftp.uu.net/pub/archiving/zip/zlib/.

In order to facilitate interoperability of implementations conforming to the DICOM Standard which elect to use this Transfer Syntax, the following policy is specified:

— Any implementation which has elected to support the Deflated Explicit VR Little Endian Transfer Syntax for any Abstract Syntax, shall also support the Explicit VR Little Endian Transfer for that Abstract Syntax

Notes: 1.This requirement to support the (uncompressed) Explicit VR Little Endian Transfer Syntax is in order to ensure full-fidelity exchange of VR information in the case that the Association Acceptor does not support the Deflated Explicit VR Little Endian Transfer Syntax. The requirement specified in Section 10.1 of this part, that the Default Implicit VR Little Endian Transfer Syntax be supported by all implementations except those that only have access to lossy compressed pixel data, is not waived. In otherwords, an implementation must support all three transfer syntaxes.

2. There are no such "baseline" requirements on media, since such requirements are at the discretion of the Media Application Profile. Furthermore, sufficient object "management" information should be present in the DICOMDIR even if an individual application cannot decompress an instance encoded with the deflated transfer syntax.

This DICOM Deflated Explicit VR Little Endian Transfer Syntax shall be identified by a UID of Value "1.2.840.10008.1.2.1.99"

Copyright National Electrical Manufacturers Association
Provided by IHS under license with NEMA
No reproduction or networking permitted without license from IHS
Not for Resale

Annex B
(Informative)
Creating a privately defined unique identifier

Privately defined Unique Identifiers (UIDs) are used in DICOM to uniquely identify items such as Specialized or Private SOP Classes, Image SOP Instances , Study SOP Instances, etc.

A UID is formed using a registered root (see Annex C) and an organization specific suffix. The manner in which the suffix of a Privately Defined UID is defined is not constrained by the DICOM Standard. Only the guarantee of its uniqueness by the defining organization is required by DICOM. This example presents a particular choice made by a specific organization in defining its suffix to guarantee uniqueness. A variant is discussed.

"1.2.840.xxxxx.3.152.235.2.12.187636473"

root. suffix

In this example, the root is:

1	Identifies ISO
2	Identifies ANSI Member Body
840	Country code of a specific Member Body (U.S. for ANSI)
xxxxx	Identifies a specific Organization.(provided by ANSI)

In this example the first two components of the suffix relate to the identification of the device:

3	Manufacturer or user defined device type
152	Manufacturer or user defined serial number

The remaining four components of the suffix relate to the identification of the image:

235	Study number
2	Series number
12	Image number
187636473	Encoded date and time stamp of image acquisition

In this example, the organization has chosen these components to guarantee uniqueness. Other organizations may choose an entirely different series of components to uniquely identify its images. In this example, the organization has chosen these components to guarantee uniqueness. Other organizations may choose an entirely different series of components to uniquely identify its images. For example it may have been perfectly valid to omit the Study Number, Series Number and Image Number if the time stamp had a sufficient precision to ensure that no two images might have the same date and time stamp.

Because of the flexibility allowed by the DICOM Standard in creating Privately Defined UIDs, implementations should not depend on any assumed structure of UIDs and should not attempt to parse UIDs to extract the semantics of some of its components.

Copyright National Electrical Manufacturers Association
Provided by IHS under license with NEMA
No reproduction or networking permitted without license from IHS
Not for Resale

Annex C
(Informative)
DICOM unique identifier registration process

This registration process applies to a number of unique identifiers that share the same properties, structure and registration process. It applies to the following identifiers:

- The Values assigned to DICOM Data Elements of Value Representation VR = UID (See Table 6.2-1). Such Data Elements are defined in PS 3.3, PS 3.4, PS 3.6, and PS 3.7.
- The DICOM Abstract Syntaxes Names. Abstract Syntax Names are defined in PS 3.4.
- The DICOM Transfer Syntax Names. Transfer Syntax Names are defined in Annex A.
- The DICOM Application Context Names. Application Context Names are defined in PS 3.7

UID structure is based on the numeric form of the OSI Object Identifier as defined by ISO 8824. Values shall be registered as defined by ISO 9834-3 to ensure global uniqueness.

The DICOM Standard assigns Values to a number of such unique identifiers. The organization responsible for their registration is NEMA which guarantees uniqueness.

For privately registered identifiers, NEMA will not act as registration authority. Related organizations shall obtain their proper registration as defined for OSI Object Identifiers by ISO 9834-3 to ensure global uniqueness. National Standards Organizations representing a number of countries (e.g., UK, France, Japan, USA, etc.) for the International Standards Organization act as a registration authority by delegation from ISO, as defined by ISO 9834-3.

Note: 1. For example, in the USA ANSI assigns, for a fee, Organization Identifiers to any requesting organization. Such an identifier may be used by the identified organization as a root to which it may add a suffix made of one or more components. The identified organization accepts the responsibility to properly register these suffixes to ensure uniqueness.

2. Following are two typical examples of obtaining a UID <org root>. These examples are not intended to illustrate all the possible methods for obtaining a UID <org root>, see ISO 8824 and ISO 9843-3 for complete specifications. Organization identifiers may be obtained from various ISO member bodies (e.g., IBN in Belgium, ANSI in the United States, AFNOR in France, BSI in Great Britain, DIN in Germany, COSIRA in Canada).

The first example shows the case of an <org root> issued by an ISO Member Body (ANSI in the USA in this example). The <org root> is composed of an identifier for ISO, a member body branch identifier, a country code and an organization ID.

Note that there is no requirement that an implementation using an ANSI issued <org root> be made or located in the USA.

The <org root> is made up of the following components: 1.2.840.xxxxx

- 1 identifies ISO
- 2 identifies the ISO member body branch
- 840 identifies the country code of a specific ISO member body (U.S. for ANSI)
- xxxxx identifies a specific organization as registered by the ISO member body ANSI.

The second example shows the case of an <org root> issued by ISO (is delegated to BSI) to an international organization. It is composed of an identifier for ISO, an international organization branch identifier, and an International Code Designator. The value of the<org root> is assigned by an international registration authority that may be used by many different UID's defined by the same international organization.

Copyright National Electrical Manufacturers Association
Provided by IHS under license with NEMA
No reproduction or networking permitted without license from IHS
Not for Resale

The <org root> is made up of the following components: 1.3.yyyy

- 1 identifies ISO
- 3 identifies the international organization branch
- yyyy identifies a specific organization as registered by an International Code Designator registration authority (see ISO 6523).

3. Example components of a <suffix> for unique identification of an image could include:
   - product
   - system identifier
   - study, series and image numbers
   - study, series and image date & times.

Copyright National Electrical Manufacturers Association
Provided by IHS under license with NEMA
No reproduction or networking permitted without license from IHS
Not for Resale

Copyright National Electrical Manufacturers Association
Provided by IHS under license with NEMA
No reproduction or networking permitted without license from IHS

Not for Resale

Annex D
(Informative)
Examples of various pixel data and overlay encoding schemes

D.1 DETAILED EXAMPLE OF PIXEL DATA ENCODING

As specified in PS3.3, Image Pixel Data is stored within the Value of the Pixel Data Element (7FE0,0010). The order in which Pixel Data for an image plane is encoded is from left to right and top to bottom, a row at a time (see Figure D-1).

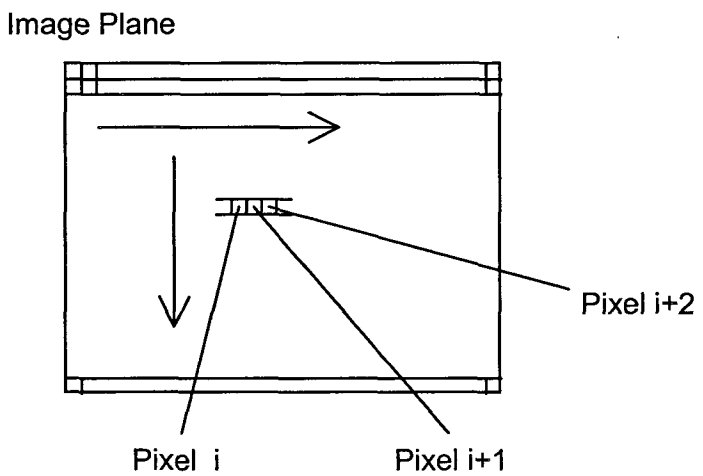

Figure D-1: An Image Pixel Plane

An individual pixel may consist of one or more Pixel Sample Values (e.g. color or multi-planar images). Each Pixel Sample Value can be expressed as either a binary 2's complement integer or a binary unsigned integer, as specified by the Pixel Representation Data Element (0028, 0103). The number of bits in each Pixel Sample Value is specified by Bits Stored (0028,0101). For 2's complement integer Pixel Samples the sign bit is the most significant bit of the Pixel Sample Value.

A Pixel Cell is the container for a Pixel Sample Value and optionally additional bits. These additional bits can be used for overlay planes, or to place Pixels on certain boundaries (byte, word, etc.). A Pixel Cell exists for every individual Pixel Sample Value in the Pixel Data. The size of the Pixel Cells is specified by Bits Allocated (0028,0100) and is greater than or equal to the Bits Stored (0028,0101). The placement of the Pixel Sample Values within the Pixel Cells is specified by High Bit (0028,0102).

Any restrictions on the characteristics of a Pixel Cell and the Pixel Sample Value contained therein is specific to the Information Object Definition (e.g. Image Object) containing the Pixel Data Element (see PS3.3).

The Pixel Data Element, as specified by the DICOM default Transfer Syntax in PS3.5, has a Value Representation of OW (Other Word String). The Pixel Data in DICOM 3.0, as it was in ACR-NEMA 2.0, is packed (see Figure D-2). One way to visualize this packed encoding is to imagine encoding the Pixel Cells as a concatenated stream of bits from the least significant bit of the first Pixel Cell up through the

Copyright National Electrical Manufacturers Association
Provided by IHS under license with NEMA
No reproduction or networking permitted without license from IHS
Not for Resale

most significant bit of the last Pixel Cell. Within this stream, the most significant bit of any Pixel Cell is followed by the least significant bit of the next Pixel Cell. The Pixel Data can then be broken up into a stream of physical 16-bit words, each of which is subject to the byte ordering constraints of the Transfer Syntax.

All other (non-default) DICOM Transfer Syntaxes make use of explicit VR encoding. For these Transfer Syntaxes, all Pixel Data where Bits Allocated is less than or equal to 8 may be encoded with an explicit VR of OB (see Annex A). As in the OW case, Pixel Cells are packed together, but in this case the Pixel Data is broken up into a stream of physical 8-bit words.

Note: For Pixel Data encoded with an explicit VR of OB, the encoding of the Pixel Data is unaffected by Little Endian or Big Endian byte ordering.

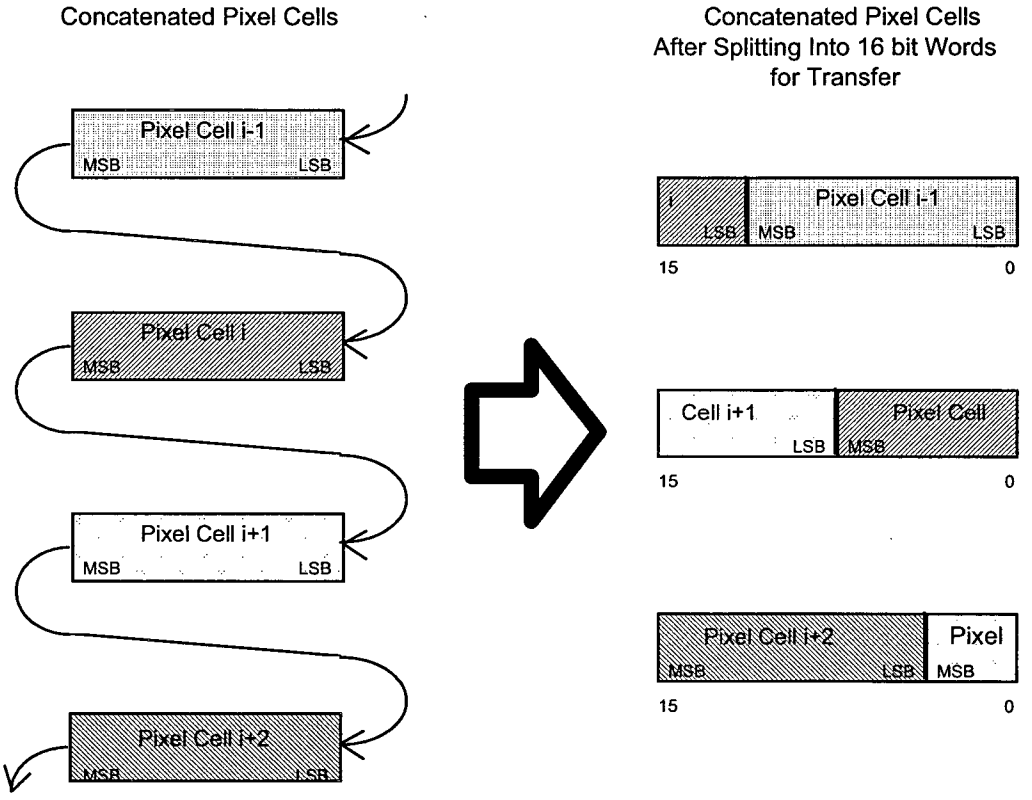

Figure D-2: Encoding (Packing) of Arbitrary Pixel Data with a VR of OW

IODs tend to specify Pixel Cells so that they begin and end on byte or word boundaries and such that the Pixel Sample Value contained within also fits 'neatly' within a cell. However, this does not have to be the case.

We now carry forward two examples of Pixel Data encoding using the Value representation of OW for the purposes of clarification. Example 1 will be a valid example for a CT Image Information Object, while Example 2 will be for a hypothetical information object (see Figure D-3).

Copyright National Electrical Manufacturers Association
Provided by IHS under license with NEMA
No reproduction or networking permitted without license from IHS
Not for Resale

Example 1: CT Pixel Cell

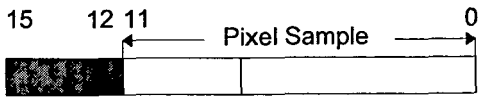

Bits Allocated = 16
Bits Stored = 12
High Bit = 11

Example 2: Hypothetical Pixel Cell

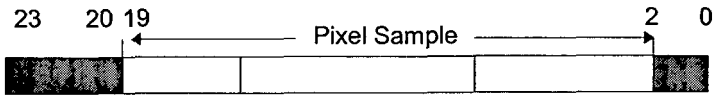

Bits Allocated = 24
Bits Stored = 18
High Bit = 19

Figure D-3: Example Pixel Cells

Copyright National Electrical Manufacturers Association
Provided by IHS under license with NEMA
No reproduction or networking permitted without license from IHS
Not for Resale

Figure D-4 shows Pixel Data constructed of these example Pixel Cells as they are packed into a stream of 16-bit words.

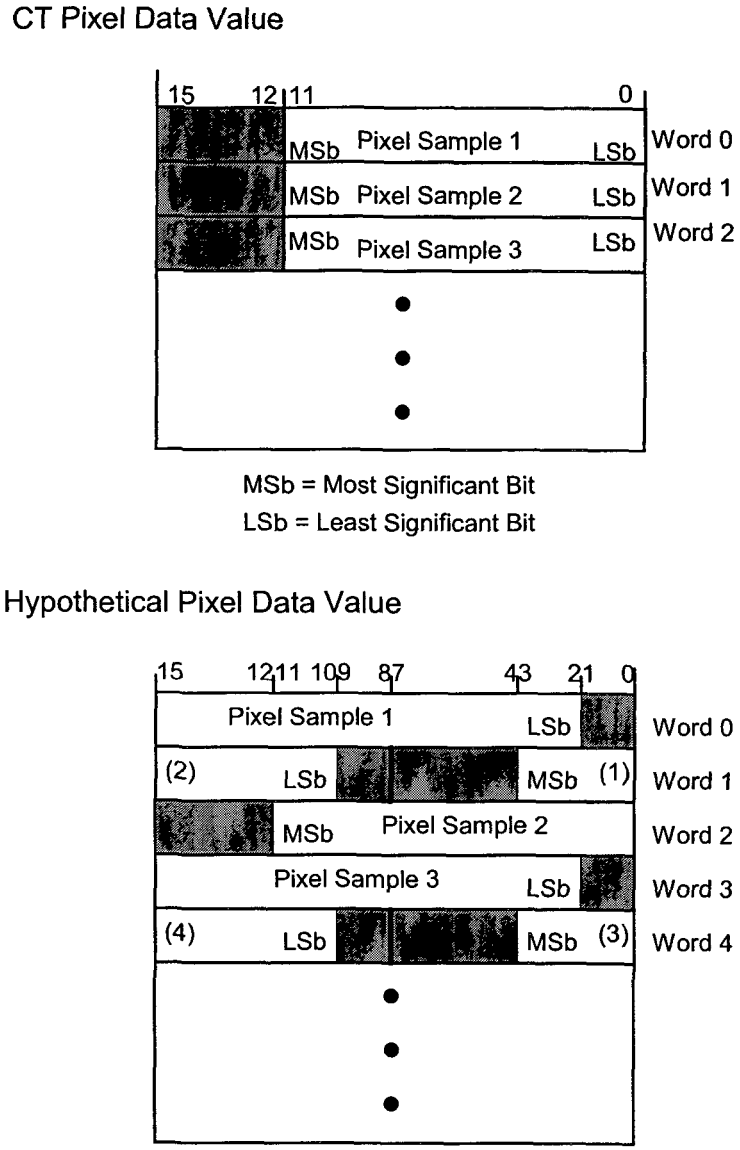

Figure D-4: Example Pixel Cells Packed into 16-bit Words (VR = OW)

Copyright National Electrical Manufacturers Association
Provided by IHS under license with NEMA
No reproduction or networking permitted without license from IHS
Not for Resale

Byte ordering becomes a consideration when we represent the Pixel Data physically, in memory, a file, or on a network.

In the memory of a byte-addressable Big Endian machine, the highest order byte (bits 8 - 15) in each 16-bit word has a binary address of x...x0. While in a byte-addressable Little Endian machine, the lowest order byte (bits 0 - 7) in each 16-bit word has a binary address of x...x0. Figure D-5 pictures our example Pixel Data streams as they would be addressed in the memory of both a Big Endian and a Little Endian machine.

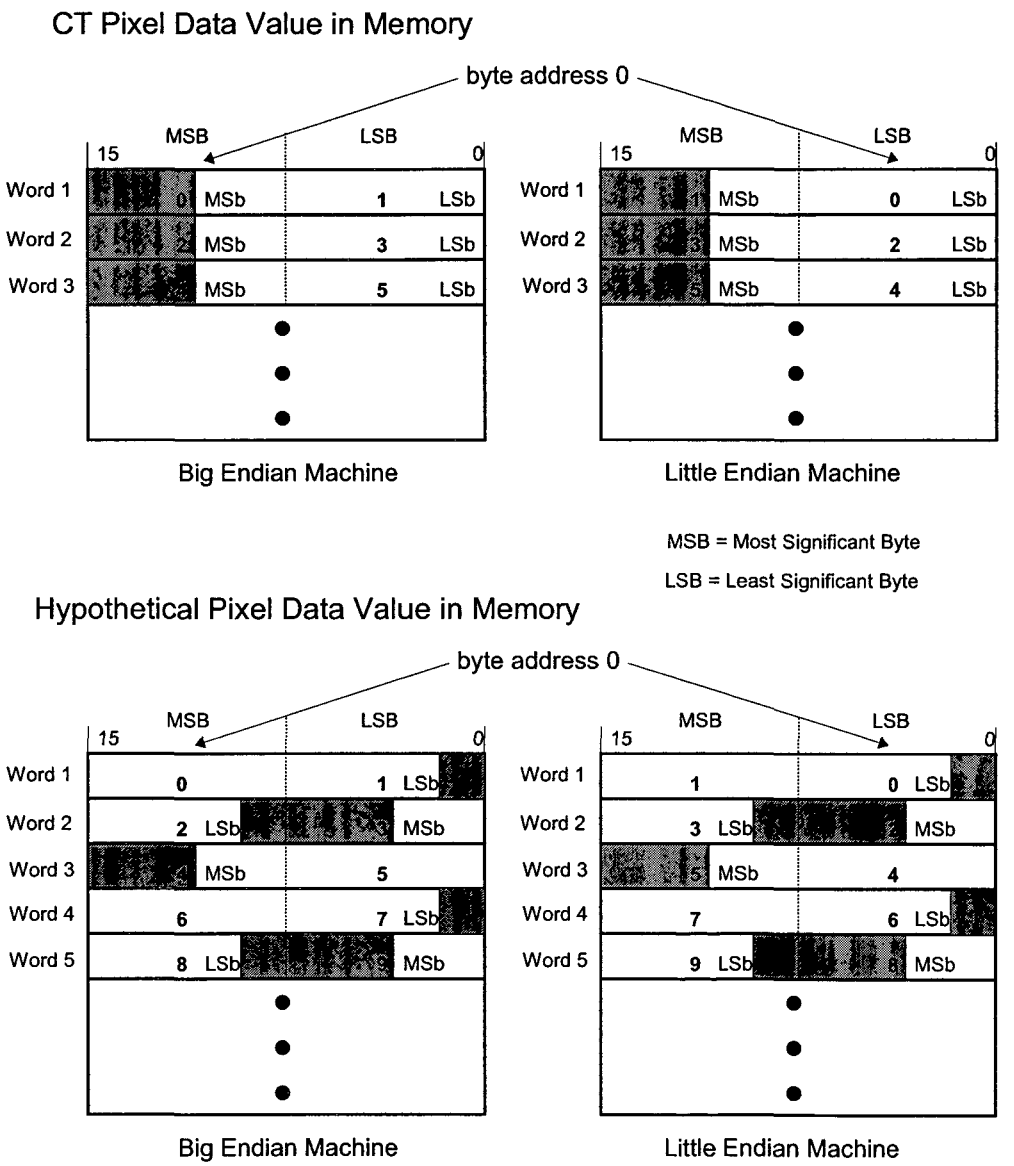

Figure D-5: Example Pixel Cells Byte Ordered in Memory (VR = OW)

Copyright National Electrical Manufacturers Association
Provided by IHS under license with NEMA
No reproduction or networking permitted without license from IHS
Not for Resale

Byte ordering is also specified as part of the negotiated Transfer Syntax used in the exchange of a DICOM message. Sixteen bit words are transmitted across the network (a byte at a time) least significant byte first in the case of a Little Endian Transfer Syntax and most significant byte first when using a Big Endian Transfer Syntax (see Figure D-6).

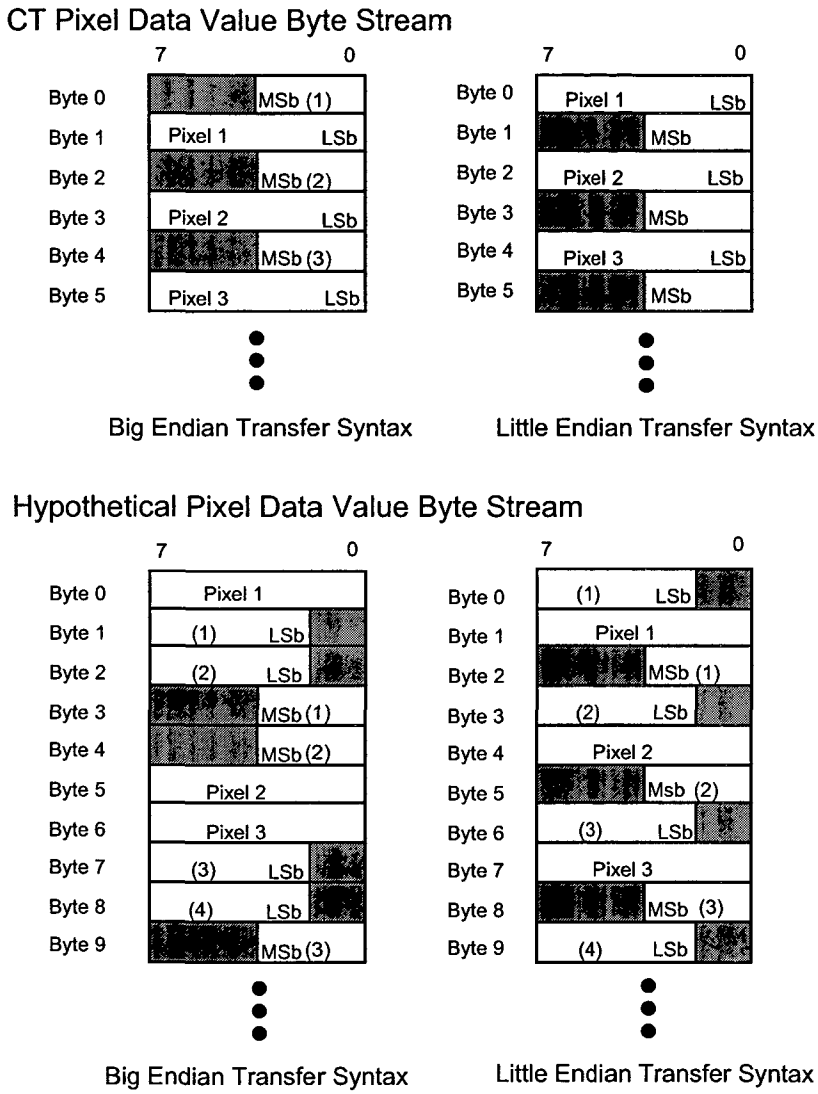

Figure D-6: Sample Pixel Data Byte Streams (VR = OW)

Copyright National Electrical Manufacturers Association
Provided by IHS under license with NEMA
No reproduction or networking permitted without license from IHS
Not for Resale

As a last pair of examples, for Pixel Data having the Value Representation OW and the following attributes: 8 bits allocated, 8 bits stored, and a high bit of 7; the resulting byte streams pictured in Figure D-7 are as they would be transmitted across a network and/or stored on media. For Pixel Data having the same attributes, but having the explicit Value Representation OB; the resulting byte streams are unaffected by byte ordering and are pictured in Figure D-8.

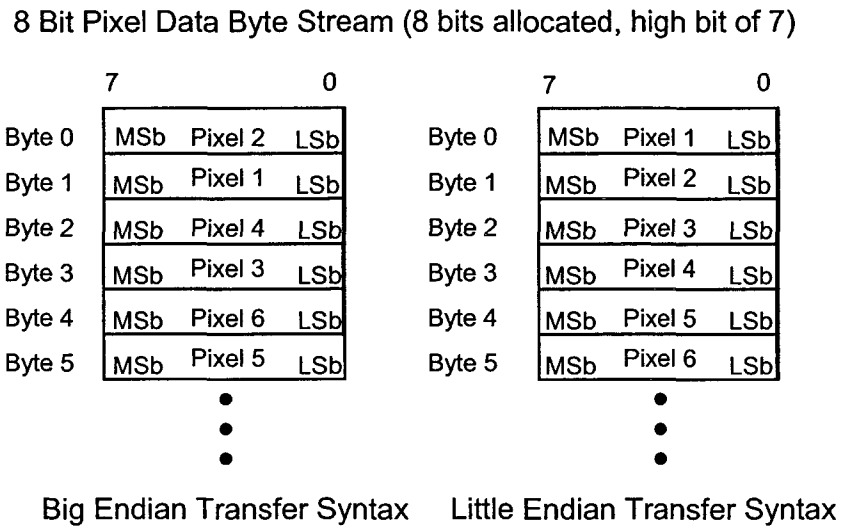

Figure D-7: Sample Pixel Data Byte Streams for 8-bits Allocated and 8-bits Stored (VR = OW)

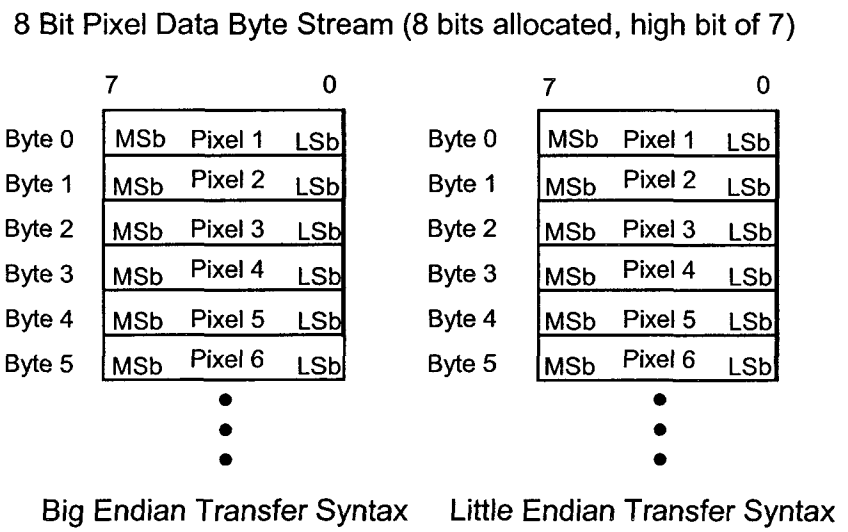

Figure D-8: Sample Pixel Data Byte Streams for 8-bits Allocated and 8-bits Stored (Explicit VR = OB)

Copyright National Electrical Manufacturers Association
Provided by IHS under license with NEMA
No reproduction or networking permitted without license from IHS
Not for Resale

D.2 VARIOUS ADDITIONAL EXAMPLES OF PIXEL AND OVERLAY DATA CELLS

The following examples further illustrate the use of the data elements for Bits Allocated (0028,0100), Bits Stored (0028,0101) and High Bit (0028,0102) in the encoding of Pixel and Overlay Data. All examples show sample Pixel Cells before being encoded in byte streams (and before being affected by a particular Transfer Syntax).

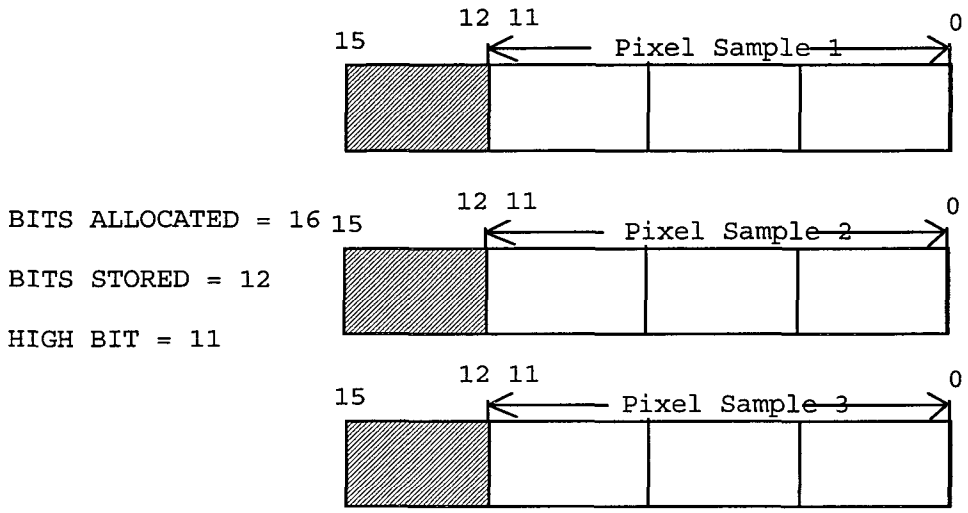

Figure D.2-1: Example 1 of Pixel and Overlay Data Cells

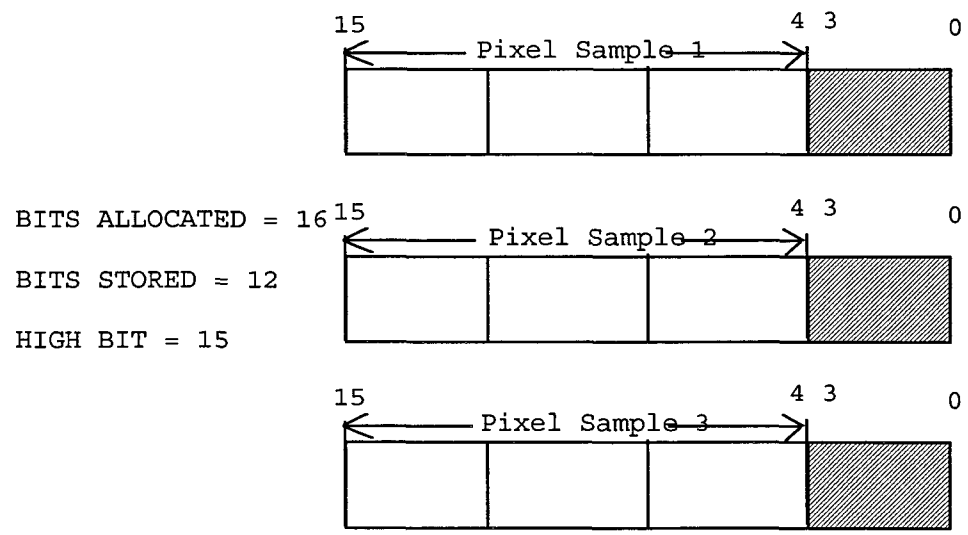

Figure D.2-2: Example 2 of Pixel and Overlay Data Cells

Copyright National Electrical Manufacturers Association
Provided by IHS under license with NEMA
No reproduction or networking permitted without license from IHS
Not for Resale

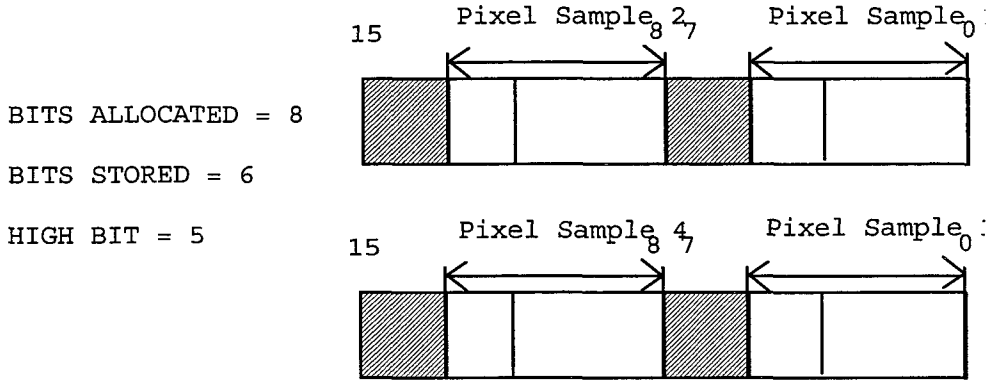

Figure D.2-3: Example 3 of Pixel and Overlay Data Cells

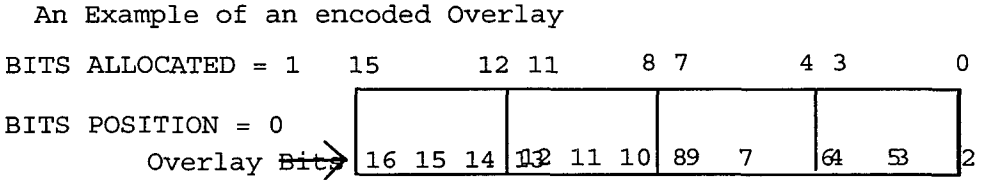

Figure D.2-4: Example 4 of Overlay Data Cells

Note: In this example, the Overlay Bits are numbered in the same manner that Pixel Cells are numbered in the other examples in this Annex. That is Overlay Bit 1 is the first bit of the Overlay Plane, encoded from left to right and top to bottom, a row at a time.

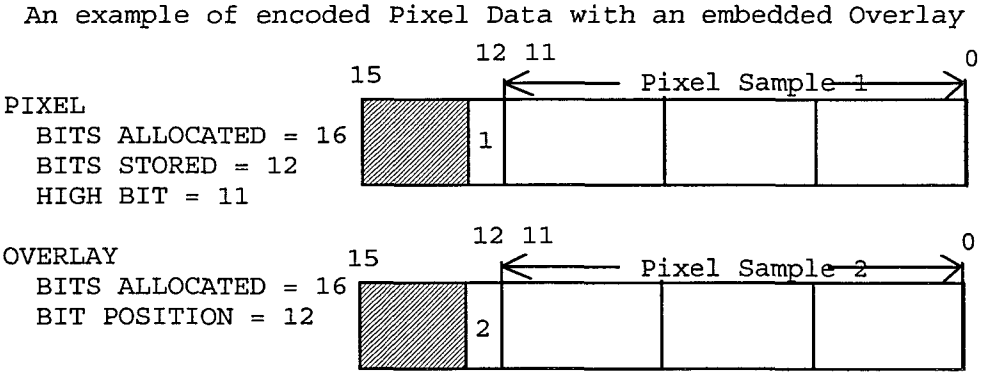

Figure D.2-5: Example 5 of Pixel and Overlay Data Cells

Copyright National Electrical Manufacturers Association
Provided by IHS under license with NEMA
No reproduction or networking permitted without license from IHS
Not for Resale

Annex E
(Normative)
DICOM default character repertoire

The default repertoire for character strings in DICOM is the Basic G0 Set of the International Reference Version of ISO 646:1990 (ISO IR-6). In addition, the four Control Characters LF, FF, CR, and ESC are supported. These control characters are a subset of the C0 set defined in ISO 646:1990 and ISO 6429:1990.

The byte encoding of the default character repertoire is pictured in Table E-1. This table can be used to derive both ISO column/row byte values and hex values for encoded representations (see Section 6.1.1).

Table E-1
DICOM DEFAULT CHARACTER REPERTOIRE ENCODING

				b_8	0	0	0	0	0	0	0	0
				b_7	0	0	0	0	1	1	1	1
				b_6	0	0	1	1	0	0	1	1
				b_5	0	1	0	1	0	1	0	1
b_4	b_3	b_2	b_1		00	01	02	03	04	05	06	07
0	0	0	0	00			SP	0	@	P	`	p
0	0	0	1	01			!	1	A	Q	a	q
0	0	1	0	02			"	2	B	R	b	r
0	0	1	1	03			#	3	C	S	c	s
0	1	0	0	04			$	4	D	T	d	t
0	1	0	1	05			%	5	E	U	e	u
0	1	1	0	06			&	6	F	V	f	v
0	1	1	1	07			'	7	G	W	g	w
1	0	0	0	08			(	8	H	X	h	x
1	0	0	1	09			)	9	I	Y	i	y
1	0	1	0	10	LF		*	:	J	Z	j	z
1	0	1	1	11		ESC	+	;	K	[	k	{
1	1	0	0	12	FF		,	<	L	\	l	|
1	1	0	1	13	CR		-	=	M	]	m	}
1	1	1	0	14			.	>	N	^	n	~
1	1	1	1	15			/	?	O	_	o	

Copyright National Electrical Manufacturers Association
Provided by IHS under license with NEMA
No reproduction or networking permitted without license from IHS
Not for Resale

Annex F
(Informative)
Encapsulated images as part of a DICOM message

The following remarks apply generally to communicating an encoded image within a message structure according to the DICOM Standard:

a) In the course of including an encoded image in a DICOM message, the encoding is not changed. The encoded data stream is merely segmented and encapsulated according to the protocols of the DICOM Standard. After unpacking the DICOM message, the encoded data stream can be fully reconstructed at the receiving node.

b) The object definition of the DICOM Standard is always determining format and other choices that a specific encoding implementation may offer. The encoded image must be consistent with the definition of the object of which the encoded image is part. For example:

   1) If the object is defined to contain 10-bit pixel data, it is assumed that the encoding process is one that accepts at least 10-bit data. Hence, there is no need for defining separate Transfer Syntaxes, e.g. for 8-bit or 12-bit implementations. Any 12-bit implementation is assumed to operate in an 8-bit process if the object is defined to contain 8-bit data.

   2) If the image of an object is interleaved, the encoding process must reproduce the interleaving.

c) Specifications in the encoding file header must be consistent with the DICOM Message header, e.g. regarding the number of rows and columns.

d) The byte order specification of an encoded file is not altered in the course of encapsulating it in a DICOM message.

F.1 ENCAPSULATED JPEG ENCODED IMAGES

The International Standards Organization (ISO/IEC JTC1/SC2/WG10) has prepared an International Standard, ISO/IS-10918-1 (JPEG Part 1) and International Draft Standard ISO/IS-10918-2 (JPEG Part 2), for the digital compression and coding of continuous-tone still images. This standard is collectively known as the JPEG Standard.

Part 1 of the JPEG Standard sets out requirements and implementation guidelines for the coded representation of compressed image data to be interchanged between applications. The processes and representations are intended to be generic in order to support the broad range of applications for color and grayscale still images for the purpose of communications and storage within computer systems. Part 2 of the JPEG Standard defines tests for determining whether implementations comply with the requirements of the various encoding and decoding processes specified in Part 1 of the JPEG Standard.

The JPEG Standard specifies lossy and lossless code processes. The lossy coding is based on the discrete cosine transform (DCT), permitting data compression with an adjustable compression ratio. The lossless coding employs differential pulse code modulation (DPCM).

The JPEG Standard permits a variety of coding processes for the coder and decoder. These processes differ in coding schemes for the quantified data and in sample precision. The coding processes are consecutively numbered as defined in the International Draft Standard ISO/IS-10918-2 (JPEG Part 2), and are summarized in Table F.1-1. The simplest DCT-based coding process is referred to as Baseline Sequential with Huffman Coding for 8-bit Samples.

Copyright National Electrical Manufacturers Association
Provided by IHS under license with NEMA
No reproduction or networking permitted without license from IHS
Not for Resale

Table F.1-1
JPEG MODES OF IMAGE CODING

No.	Description	Lossy LY Lossless LL	Non-Hierarchical NH Hierarchical H	Sequential S Progressive P	Transform	Coding	Accepted Bits
1	Baseline	LY	NH	S	DCT	Huffman	8
2	Extended	LY	NH	S	DCT	Huffman	8
3	Extended	LY	NH	S	DCT	Arithmetic	8
4	Extended	LY	NH	S	DCT	Huffman	12
5	Extended	LY	NH	S	DCT	Arithmetic	12
6	Spectral selection only	LY	NH	P	DCT	Huffman	8
7	Spectral selection only	LY	NH	P	DCT	Arithmetic	8
8	Spectral selection only	LY	NH	P	DCT	Huffman	12
9	Spectral selection only	LY	NH	P	DCT	Arithmetic	12
10	Full progression	LY	NH	P	DCT	Huffman	8
11	Full progression	LY	NH	P	DCT	Arithmetic	8
12	Full progression	LY	NH	P	DCT	Huffman	12
13	Full progression	LY	NH	P	DCT	Arithmetic	12
14	Lossless	LL	NH	S	DPCM	Huffman	2-16
15	Lossless	LL	NH	S	DPCM	Arithmetic	2-16
16	Extended sequential	LY	H	S	DCT	Huffman	8
17	Extended sequential	LY	H	S	DCT	Arithmetic	8
18	Extended sequential	LY	H	S	DCT	Huffman	12
19	Extended sequential	LY	H	S	DCT	Arithmetic	12
20	Spectral selection only	LY	H	P	DCT	Huffman	8
21	Spectral selection only	LY	H	P	DCT	Arithmetic	8
22	Spectral selection only	LY	H	P	DCT	Huffman	12
23	Spectral selection only	LY	H	P	DCT	Arithmetic	12
24	Full progression	LY	H	P	DCT	Huffman	8
25	Full progression	LY	H	P	DCT	Arithmetic	8
26	Full progression	LY	H	P	DCT	Huffman	12
27	Full progression	LY	H	P	DCT	Arithmetic	12
28	Lossless	LL	H	S	DPCM	Huffman	2-16
29	Lossless	LL	H	S	DPCM	Arithmetic	2-16

The different coding processes specified in the JPEG Standard are closely related. By extending the capability of an implementation, increasingly more 'lower level' processes can also be executed by the implementation. This is shown in Tables F.1-2 and F.1-3 for Huffman and Arithmetic Coding, respectively. Table F.1-4 presents the capabilities for lossless implementations.

It is worth recognizing that implementations using arithmetic coding have the capability of performing Huffman coded operations with two Huffman tables since they must be able to execute the baseline process. Hence, by increasing the capability of operating with two additional Huffman tables, the odd-numbered coding processes with arithmetic coding (Table F.1-1) can also execute all corresponding even-numbered processes with Huffman coding (Table F.1-5).

Inclusion of a JPEG-coded image in a DICOM message is facilitated by the use of specific Transfer Syntaxes which are defined in Annex A. Independent of the JPEG coding processes, the same syntax

Copyright National Electrical Manufacturers Association
Provided by IHS under license with NEMA
No reproduction or networking permitted without license from IHS
Not for Resale

applies. The only distinction for different processes in the syntax is the UID value. Table F.1-5 lists the UID values in the Transfer Syntax for the various JPEG coding processes for reference.

Table F.1-2
RELATIONSHIP BETWEEN THE LOSSY JPEG HUFFMAN CODING PROCESSES
* Coding process of column can execute coding process of row

Process	1	2	4	6	8	10	12	16	18	20	22	24	26
1	*	*	*	*	*	*	*	*	*	*	*	*	*
2		*	*	*	*	*	*	*	*	*	*	*	*
4			*		*		*		*		*		*
6				*	*	*	*			*	*	*	*
8					*		*				*		*
10						*	*					*	*
12							*						*
16								*	*	*	*	*	*
18									*		*		*
20										*	*	*	*
22											*		*
24												*	*
26													*

Copyright National Electrical Manufacturers Association
Provided by IHS under license with NEMA
No reproduction or networking permitted without license from IHS
Not for Resale

Table F.1-3
RELATIONSHIP BETWEEN THE LOSSY JPEG ARITHMETIC CODING PROCESSES
* Coding process of column can execute coding process of row

Process	1	3	5	7	9	11	13	17	19	21	23	25	27
1+	*	*	*	*	*	*	*	*	*	*	*	*	*
3		*	*	*	*	*	*	*	*	*	*	*	*
5			*		*		*		*		*		*
7				*	*	*	*			*	*	*	*
9					*		*				*		*
11						*	*					*	*
13							*						*
17								*	*	*	*	*	*
19									*		*		*
21										*	*	*	*
23											*		*
25												*	*
27													*

+ The Baseline Coding Process, which uses Huffman encoding, is required by all lossy coding processes.

Table F.1-4
RELATIONSHIP BETWEEN THE LOSSLESS JPEG PROCESSES
* Coding process of column can execute coding process of row

Process	14	15	28	29
14	*		*	
15		*		*
28			*	
29				*

Copyright National Electrical Manufacturers Association
Provided by IHS under license with NEMA
No reproduction or networking permitted without license from IHS
Not for Resale

Table F.1-5
IDENTIFICATION OF JPEG CODING PROCESSES IN DICOM

DICOM Transfer Syntax UID	JPEG process	JPEG description	capable of performing	
				lossy arithmetic coding w/opt. 4 Huffman tables
1.2.840.10008.1.2.4.50	1	baseline	1	
1.2.840.10008.1.2.4.51	2,4	extended	1,2,4	
1.2.840.10008.1.2.4.52	3,5	extended	1,3,5	ALL ≤ 5
1.2.840.10008.1.2.4.53	6,8	spect. select. NH	1,2,4,6,8	
1.2.840.10008.1.2.4.54	7,9	spect. select. NH	1,3,5,7,9	ALL ≤ 9
1.2.840.10008.1.2.4.55	10,12	full progression NH	1,2,4,6,8,10,12	
1.2.840.10008.1.2.4.56	11,13	full progression NH	1,3,5,7,9,11,13	ALL ≤ 13
1.2.840.10008.1.2.4.57	14	lossless NH	14	
1.2.840.10008.1.2.4.58	15	lossless NH	15	
1.2.840.10008.1.2.4.59	16,18	extended H	1,2,4,16,18	
1.2.840.10008.1.2.4.60	17,19	extended H	1,3,5,17,19	1,2,3,4,5,16,17,18,19
1.2.840.10008.1.2.4.61	20,22	spect. select.H	1,2,4,6,8,16,18,20,22	
1.2.840.10008.1.2.4.62	21,23	spect. select. H	1,3,5,7,9,17,19,21,23	1,2,3,4,5,6,7,8,9,16,17, 18,19,20,21,22,23
1.2.840.10008.1.2.4.63	24,26	full progression H	1,2,4,6,8,10,12,16,18, 20,22,24,26	
1.2.840.10008.1.2.4.64	25,27	full progression H	1,3,5,7,9,11,13,17,19, 21,23,25,27	ALL ≤ 27, EXCEPT 14,15
1.2.840.10008.1.2.4.65	28	lossless H	14,28	
1.2.840.10008.1.2.4.66	29	lossless H	15,29	
1.2.840.10008.1.2.4.70	14 Selection Value 1	lossless NH, first-order prediction		

F.2 ENCAPSULATED JPEG-LS ENCODED IMAGES

The International Standards Organization (ISO/IEC JTC1/SC2/WG10) has prepared an International Standard, ISO/IS-14495-1 (JPEG-LS Part 1), for the digital compression and coding of continuous-tone still images. This standard is known as the JPEG-LS Standard.

Part 1 of the JPEG-LS Standard sets out requirements and implementation guidelines for the coded representation of compressed image data to be interchanged between applications. The processes and representations are intended to be generic in order to support the broad range of applications for color and grayscale still images for the purpose of communications and storage within computer systems.

The JPEG-LS Standard specifies a single lossy (near-lossless) code process that can achieve lossless compression by constraining the absolute error value during encoding to zero. The lossless and lossy (near-lossless) coding is based on a predictive scheme with statistical modeling, in which differences between pixels and their surround are computed and their context modeled prior to coding, with a run-length escape mechanism. This scheme achieves consistently better compression in lossless mode than the lossless processes of JPEG defined in ISO 10918-1, with less complexity.

Though a different coding process from those specified in ISO 10918-1 is used, the syntax of the encoded bit stream is closely related.

Copyright National Electrical Manufacturers Association
Provided by IHS under license with NEMA
No reproduction or networking permitted without license from IHS
Not for Resale

A single JPEG-LS process is used for bit depths up to 16 bits.

Inclusion of a JPEG-LS coded image in a DICOM message is facilitated by the use of specific Transfer Syntaxes that are defined in Annex A.

--`,,`,,`-`-`,,`,,`,`,,`---

Copyright National Electrical Manufacturers Association
Provided by IHS under license with NEMA
No reproduction or networking permitted without license from IHS

Not for Resale

Annex G
(Normative)
Encapsulated RLE Compressed Images

G.1 SUMMARY

This annex describes how to apply RLE Compression to an image or an individual frame of a multi-frame image. This method can be used for any image, independent of the values of the data elements that describe the image (i.e: Photometric Interpretation (0028,0004) and Bits Stored (0028,0101)).

RLE Compression consists of the following steps:

1. The image is converted to a sequence of Composite Pixel Codes (see PS 3.3).
2. The Composite Pixel Codes are used to generate a set of Byte Segments (see section G.2)
3. Each Byte Segment is RLE compressed to produce a RLE Segment (see section G.4)
4. The RLE Header is appended in front of the concatenated RLE Segments (see section G.5)

G.2 BYTE SEGMENTS

A Byte Segment is a series of bytes generated by decomposing the Composite Pixel Code (see PS 3.3).

If the Composite Pixel Code is not an integral number of bytes in size, sufficient Most Significant zero bits are added to make it an integral byte size. This is known as the Padded Composite Pixel Code.

The first Segment is generated by stripping off the most significant byte of each Padded Composite Pixel Code and ordering these bytes sequentially. The second Segment is generated by repeating this process on the stripped Padded Composite Pixel Code continuing until the last Pixel Segment is generated by ordering the least significant byte of each Padded Component Pixel Code sequentially.

Note: If Photometric Interpretation (0028, 0004) equals RGB and Bits Stored equals 8, then three Segments are generated. The first one holds all the Red values, the second all the Green values, and the third all the Blue values.

G.3 THE RLE ALGORITHM

The RLE algorithm described in this section is used to compress Byte Segments into RLE Segments. There is a one-to-one correspondence between Byte Segments and RLE Segments. Each RLE segment must be an even number of bytes or padded at its end with zero to make it even.

G.3.1 The RLE encoder

A sequence of identical bytes (Replicate Run) is encoded as a two-byte code:

< -count + 1 > <byte value>, where

count = the number of bytes in the run, and

2 <= count <= 128

and a non-repetitive sequence of bytes (Literal Run) is encoded as:

< count - 1 > <literal sequence of bytes>, where

count = number of bytes in the sequence, and

1 <= count <= 128.

Copyright National Electrical Manufacturers Association
Provided by IHS under license with NEMA
No reproduction or networking permitted without license from IHS
Not for Resale

The value of -128 may not be used to prefix a byte value.

Note: It is common to encode a 2-byte repeat run as a Replicate Run except when preceded and followed by a Literal Run, in which case it's best to merge the three runs into a Literal Run.

Three-byte repeats shall be encoded as Replicate Runs. Each row of the image shall be encoded separately and not cross a row boundary.

G.3.2 The RLE decoder

Pseudo code for the RLE decoder is shown below:

```
Loop until the number of output bytes equals the uncompressed segment size
    Read the next source byte into n
    If n> =0 and n <= 127 then
        output the next n+1 bytes literally
    Elseif n <= - 1 and n >= -127 then
        output the next byte -n+1 times
    Elseif n = - 128 then
        output nothing
    Endif
Endloop
```

G.4 ORGANIZATION OF RLE COMPRESSED FRAME

The RLE Segments are ordered as described in section G.2. They are preceded by the RLE Header which contains offsets to the start of each RLE Segment. The RLE Header is described in G.5.

The first RLE Segment immediately follows the RLE Header and the remaining RLE Segments immediately follow each other. This is illustrated in the diagram below.

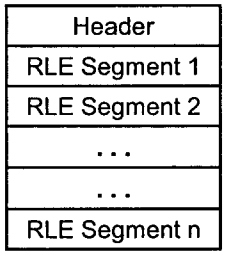

G.5 RLE HEADER FORMAT

The RLE Header contains the number of RLE Segments for the image, and the starting offset of each of the RLE Segments. Each of these numbers is represented by a UL (unsigned long) value stored in little-endian format. The RLE Header is 16 long words in length. This allows it to describe a compressed image with up to 15 RLE Segments. All unused segments offsets shall be set to zero.

Each of the starting locations for the RLE Segments are byte offsets relative to the beginning of the RLE Header. Since the RLE Header is 16 unsigned longs or 64 bytes, the offset of RLE Segment One is 64.

The following diagram illustrates the ordering of the offsets within the RLE Header.

Copyright National Electrical Manufacturers Association
Provided by IHS under license with NEMA
No reproduction or networking permitted without license from IHS
Not for Resale

number of RLE Segments
offset of RLE Segment 1 = 64
offset of RLE Segment 2
. . .
. . .
offset of RLE Segment n
0
0
0

Copyright National Electrical Manufacturers Association
Provided by IHS under license with NEMA
No reproduction or networking permitted without license from IHS

Not for Resale

G.6 EXAMPLE OF ELEMENTS FOR AN ENCODED YC_BC_R RLE THREE-FRAME IMAGE WITH BASIC OFFSET TABLE

Figure G.6.1 is an example of encoding of RLE Compressed Frames (described in Section G.4) with the basic offset table. Figure G.6.2 is an example of Item Value data for one frame.

Figure G.6.1
EXAMPLE OF ELEMENTS FOR AN ENCODED YC_BC_R RLE THREE-FRAME IMAGE WITH BASIC OFFSET TABLE

Pixel Data Element Tag	**Value Representation**		**Data Element Length**	**Data Element**					
				Basic Offset Table with Item Value			*First Fragment (Frame 1) of Pixel Data*		
				Item Tag	Item Length	Item Value	Item Tag	Item Length	Item Value
(7FE0, 0010) with VR of OB	OB	0000H	FFFF FFFFH undefined length	(FFFE, E000)	0000 000CH	0000 0000H 0000 02D0H 0000 0642H	(FFFE, E000)	0000 02C8H	RLE Compressed Frame
4 bytes	2 bytes	2 bytes	4 bytes	4 bytes	4 bytes	000CH bytes	4 bytes	4 bytes	02C8H bytes

Data Element Continued							
Second Fragment (Frame 2) of Pixel Data			Third Fragment (Frame 3) of Pixel Data			Sequence Delimiter Item	
Item Tag	Item Length	Item Value	Item Tag	Item Length	Item Value	Sequence Delimiter Tag	Item Length
(FFFE, E000)	0000 036AH	RLE Compressed Frame	(FFFE, E000)	0000 0BC8H	RLE Compressed Frame	(FFFE, E0DD)	0000 0000H
4 bytes	2 bytes	036AH bytes	4 bytes	4 bytes	0BC8H bytes	4 bytes	4 bytes

Copyright National Electrical Manufacturers Association
Provided by IHS under license with NEMA
No reproduction or networking permitted without license from IHS
Not for Resale

Figure G.6.2
EXAMPLE OF ENCODED YC_BC_R RLE COMPRESSED FRAME ITEM VALUE

Offset	Data	Description of Data	
0000 0000H	0000 0003H	number of RLE Segments	(Header)
	0000 0040H	location of RLE Segment 1 (Y component)	
	0000 0140H	location of RLE Segment 2 (C_B component)	
	0000 01C0H	location of RLE Segment 3 (C_R component)	
	0000 0000H		
	.....		
	.....		
	0000 0000H		
0000 0040H	Y - RLE Segment Data		(DATA)
0000 0140H	C_B - RLE Segment Data		(DATA)
0000 01C0H	C_R - RLE Segment Data		(DATA)

Copyright National Electrical Manufacturers Association
Provided by IHS under license with NEMA
No reproduction or networking permitted without license from IHS
Not for Resale

Annex H
(Informative)
Character sets and person name value representation in the Japanese Language

H.1 CHARACTER SETS FOR THE JAPANESE LANGUAGE

The purpose of this section is to explain the character sets for the Japanese language.

H.1.1 JIS X 0201

JIS X 0201 has the following code elements:

ISO-IR 13	Japanese katakana (phonetic) characters (94 characters)
ISO-IR 14	Japanese romaji (alphanumeric) characters (94 characters)

JIS X 0201 defines a 7-bit romaji code table (ISO-IR 14), a 7-bit katakana code table (ISO-IR 13), and the combination of romaji and katakana as an 8-bit code table (ISO-IR 14 as G0, ISO-IR 13 as G1).

The 7-bit romaji (ISO-IR 14) is identical to ASCII (ISO-IR 6) except that bit combination 05/12 represents a yen sign and bit combination 07/14 represents an over-line. These are national Graphic Character allocations in ISO 646.

Escape Sequence for ISO/IEC 2022 (for reference) (For the Defined Terms, see PS 3.3)

	ISO-IR 14	**ISO-IR 13**
G0 set	***ESC 02/08 04/10***	ESC 02/08 04/09
G1 set	ESC 02/09 04/10	***ESC 02/09 04/09***

Notes: 1. The table does not include the G2 and G3 sets that are not used in DICOM. See Section 6.1.2.5.1.

2. Defined Terms ISO_IR 13 and ISO 2022 IR 13 for the value of the Specific Character Set (0008,0005) support the G0 set for ISO-IR 14 and G1 set for ISO-IR 13. See PS 3.3.

H.1.2 JIS X 0208

JIS X 0208 has the following code element:

ISO-IR 87: Japanese kanji (ideographic), hiragana (phonetic), and katakana (phonetic) characters (94^2 characters, 2-byte).

H.1.3 JIS X 0212

JIS X 0212 has the following code element:

ISO-IR 159: Supplementary Japanese kanji (ideographic) characters (94^2 characters, 2-byte)

Escape Sequence for ISO/IEC 2022 (for reference) (For the Defined Terms, see PS 3.3)

	ISO-IR 87	**ISO-IR 159**
G0 set	***ESC 02/04 04/02***	***ESC 02/04 02/08 04/04***
G1 set	ESC 02/04 02/09 04/02	ESC 02/04 02/09 04/04

Copyright National Electrical Manufacturers Association
Provided by IHS under license with NEMA
No reproduction or networking permitted without license from IHS
Not for Resale

Notes: 1. The Escape Sequence for the designation function G0-DESIGNATE 94-SET, has first I byte 02/04 and second I byte 02/08. There is an exception to this: The second I byte 02/08 is omitted if the Final Byte is 04/00, 04/01 or 04/02. See ISO/IEC 2022.

2. The table does not include the G2 and G3 sets that are not used in DICOM. See Section 6.1.2.5.1.

3. Defined Term ISO 2022 IR 87 for the value of the Specific Character Set (0008,0005) supports the G0 set for ISO-IR 87, and Defined Term ISO 2022 IR 159 supports the G0 set for ISO-IR 159. See PS 3.3.

H.2 INTERNET PRACTICE

DICOM has adopted an encoding method for Japanese character sets that is similar to the method for Internet practice.

The major protocols for the Internet such as SMTP, NNTP and HTTP adopt the encoding method for Japanese characters called "ISO-2022-JP" as described in RFC 1468, Japanese Character Encoding for Internet Messages. The method of encoding Japanese character sets in DICOM is almost the same as ISO-2022-JP, except for the following.

Character sets supported for the Japanese language:

DICOM	**ISO-2022-JP**
ASCII (ISO-IR 6)	ASCII (ISO-IR 6)
JIS X 0201 Katakana (ISO-IR 13)	JIS-X 0201 Romaji (ISO-IR 14)
JIS X 0201 Romaji (ISO-IR 14)	JIS-X 0208 Kanji (ISO-IR 87)
JIS X 0208 Kanji (ISO-IR 87)	
JIS X 0212 Kanji (ISO-IR 159)	

Control Character set supported:

DICOM		**ISO-2022-JP**	
LF	(00/10)	LF	(00/10)
FF	(00/12)	CR	(00/13)
CR	(00/13)	SO	(00/14)
ESC	(01/11)	SI	(00/15)
		ESC	(01/11)

Copyright National Electrical Manufacturers Association
Provided by IHS under license with NEMA
No reproduction or networking permitted without license from IHS
Not for Resale

H.3 EXAMPLE OF PERSON NAME VALUE REPRESENTATION IN THE JAPANESE LANGUAGE

Character strings representing person names are encoded using a convention for PN value representations based on component groups with 5 components.

For languages which use ideographic characters, it is sometimes necessary to write names both in ideographic characters and in phonetic characters. Ideographic characters may be required for official purposes, while phonetic characters may be needed for pronunciation and data processing purposes.

For the purpose of writing names in ideographic characters and in phonetic characters, up to 3 component groups may be used. The delimiter of the component group shall be the equals character "=" (3DH). The three component groups in their order of occurrence are: a single byte representation, an ideographic representation, and a phonetic representation.

H.3.1 Example 1: Value 1 of Attribute Specific Character Set (0008,0005) is not present.

In this case, ISO-IR 6 is used by default.

(0008,0005) \ISO 2022 IR 87

Character String:

Yamada^Tarou=山田^太郎=やまだ^たろう Yamada^Tarou= ESC 02/04 04/02 山田 ESC 02/08 04/02 ^ ESC 02/04 04/02 太郎 ESC 02/08 04/02 = ESC 02/04 04/02 やまだ ESC 02/08 04/02 ^ ESC 02/04 04/02 たろう ESC 02/08 04/02

Encoded representation:

05/09 06/01 06/13 06/01 06/04 06/01 5/14 05/04 06/01 07/02 06/15 07/05 03/13 01/11 02/04 04/02 03/11 03/03 04/05 04/04 01/11 02/08 04/02 05/14 01/11 02/04 04/02 04/02 04/00 04/15 03/10 01/11 02/08 04/02 03/13 01/11 02/04 04/02 02/04 06/04 02/04 05/14 02/04 04/00 01/11 02/08 04/02 05/14 01/11 02/04 04/02 02/04 03/15 02/04 06/13 02/04 02/06 01/11 02/08 04/02

An example of what might be displayed or printed by an ASCII based machine that displays or prints the Control Character ESC (01/11) using \033:

Yamada^Tarou=\033$B;3ED\033(B^\033$BB@O:\033(B=\033Bd$^$@\033(B^\033B?m&\033(B

Copyright National Electrical Manufacturers Association
Provided by IHS under license with NEMA
No reproduction or networking permitted without license from IHS
Not for Resale

Table H-1
CHARACTER SETS AND ESCAPE SEQUENCES USED IN EXAMPLE 1

Character Set Description	Component Group	Value of (0008,0005) Defined Term	ISO Registration Number	Standard for Code Extension	ESC Sequence		Character Set: Purpose of Use
Japanese	First: Single-byte	Value 1: none	ISO-IR 6			GL	ISO 646:
	Second: Ideographic	Value 2: ISO 2022 IR 87	ISO-IR 87	ISO 2022	ESC 02/04 04/02	GL	JIS X 0208: Japanese kanji, hiragana, katakana
		Value 1: none	ISO-IR 6	ISO 2022	ESC 02/08 04/02	GL	ISO 646: for delimiters
	Third: Phonetic	Value 2: ISO 2022 IR 87	ISO-IR 87	ISO 2022	ESC 02/04 04/02	GL	JIS X 0208: Japanese hiragana, and katakana
		Value 1: none	ISO-IR 6	ISO 2022	ESC 02/08 04/02	GL	ISO 646: for delimiters

H.3.2 Example 2: Value 1 of Attribute Specific Character Set (0008,0005) is ISO 2022 IR 13.

(0008,0005) ISO 2022 IR 13\ISO 2022 IR 87

Character String:

ﾔﾏﾀﾞ^ﾀﾛｳ=山田^太郎=やまだ^たろう

ﾔﾏﾀﾞ^ﾀﾛｳ= ESC 02/04 04/02 山田 ESC 02/08 04/10 ^ ESC 02/04 04/02 太郎 ESC 02/08 04/10 = ESC 02/04 04/02 やまだ ESC 02/08 04/10 ^ ESC 02/04 04/02 たろう ESC 02/08 04/10

Encoded representation:

13/04 12/15 12/00 13/14 05/14 12/00 13/11 11/03 03/13 01/11 02/04 04/02 03/11 03/03 04/05 04/04 01/11 02/08 04/10 05/14 01/11 02/04 04/02 04/02 04/00 04/15 03/10 01/11 02/08 04/10 03/13 01/11 02/04 04/02 02/04 06/04 02/04 05/14 02/04 04/00 01/11 02/08 04/10 05/14 01/11 02/04 04/02 02/04 03/15 02/04 06/13 02/04 02/06 01/11 02/08 04/10

An example of what might be displayed or printed by an ASCII based machine that displays or prints the Control Character ESC (01/11) using \033:

\324\3I7\300\336^\300\333\263=\033$B;3ED\033(J^\033$BB@O:\033(J=\033Bd$^$@\033(J^\033B?m&\033(J

Copyright National Electrical Manufacturers Association
Provided by IHS under license with NEMA
No reproduction or networking permitted without license from IHS
Not for Resale

Table H-2
CHARACTER SETS AND ESCAPE SEQUENCES USED IN EXAMPLE 2

Character Set Description	Component Group	Value of (0008,0005) Defined Term	ISO Registration Number	Standard for Code Extension	ESC Sequence		Character Set: Purpose of Use
Japanese	First: Single-byte	Value 1: ISO 2022 IR 13	ISO-IR 13	ISO 2022	ESC 02/09 04/09	GR	JIS X 0201: Japanese katakana
			ISO-IR 14	ISO 2022	ESC 02/08 04/10	GL	JIS X 0201: Japanese romaji for delimiters
	Second: Ideographic	Value 2: ISO 2022 IR 87	ISO-IR 87	ISO 2022	ESC 02/04 04/02	GL	JIS X 0208: Japanese kanji, hiragana, katakana
		Value 1: ISO 2022 IR 13	ISO-IR 14	ISO 2022	ESC 02/08 04/10	GL	JIS X 0201: Japanese romaji for delimiters
	Third: Phonetic	Value 2: ISO 2022 IR 87	ISO-IR 87	ISO 2022	ESC 02/04 04/02	GL	JIS X 0208: Japanese hiragana, and katakana
		Value 1: ISO 2022 IR 13	ISO-IR 14	ISO 2022	ESC 02/08 04/10	GL	JIS X 0201: Japanese romaji for delimiters

Copyright National Electrical Manufacturers Association
Provided by IHS under license with NEMA
No reproduction or networking permitted without license from IHS
Not for Resale

Annex I
(Informative)
Character sets and person name value representation In the Korean Language

I.1 CHARACTER SETS FOR THE KOREAN LANGUAGE IN DICOM

KS X 1001 (registered as ISO-IR 149) is used as a Korean character set in DICOM. This character set is the one most broadly used for the representation of Korean characters. It can be encoded by ISO 2022 code extension techniques, and is registered in ISO 2375.

Escape Sequence (for reference) (see PS 3.3)

	ISO-IR 149
G0 set	ESC 02/04 02/08 04/03
G1 set	***ESC 02/04 02/09 04/03***

Notes: 1. ISO-IR 149 is only used as a G1 set in DICOM.

2. The Korean character set (ISO IR 149) is invoked to the G1 area. This is different from the Japanese multi-byte character sets (ISO 2022 IR 87 and ISO 2022 IR 159) which use the G0 code area. Japan's choice of G0 is due to the adoption of an encoding method based on "ISO-2022-JP". ISO-2022-JP, the most familiar encoding method in Japan, and uses only the G0 code area. In Korea, most operating systems adopt an encoding method that invokes the Hangul character set (KS X 1001) in the G1 code area. So, the difference between code areas of Korean and Japanese character originates in convention, not a technical problem. Invocation of multi-byte character sets to the G1 area does not change the current DICOM normative requirements.

I.2 EXAMPLE OF PERSON NAME VALUE REPRESENTATION IN THE KOREAN LANGUAGE

Person names in the Korean language may be written in Hangul (phonetic characters), Hanja (ideographic characters), or English (single-byte characters). The three component groups should be written in the order of single-byte, ideographic, and phonetic (see Table 6.2-1).

(0008,0005) \ISO 2022 IR 149

Hong^Gildong=洪^吉洞=홍^길동

Hong^Gildong= ESC 02/04 02/09 04/03 洪^ ESC 02/04 02/09 04/03 吉洞= ESC 02/04 02/09 04/03 홍^ ESC 02/04 02/09 04/03 길동

Character String:

Encoded representation:

04/08 06/15 06/14 06/07 05/14 04/07 06/09 06/12 06/04 06/15 06/14 06/07 03/13

01/11 02/04 02/09 04/03 15/11 15/03 05/14 01/11 02/04 02/09 04/03 13/01 12/14

13/04 13/07 03/13 01/11 02/04 02/09 04/03 12/08 10/11 05/14 01/11 02/04 02/09

Copyright National Electrical Manufacturers Association
Provided by IHS under license with NEMA
No reproduction or networking permitted without license from IHS
Not for Resale

04/03 11/01 14/06 11/05 11/15

An example of what might be displayed or printed by an ASCII based machine that displays or prints the Control Character ESC (01/11) using \033:

Hong^Gildong=\033$)C\373\363^\033$)C\321\316\324\327=\033$)C\310\253^\033$)C\261\346\265\277

Notes: 1. The multi-byte character set (ISO-IR 149) and single-byte character set (ISO 646) can be used intermixed without any explicit escape sequence after the initial escape sequence. Once ISO 646 has been designated to the GL area and ISO-IR 149 to the GR area, each character set has different code area, thus can be used intermixed. The decoder will check the most significant bit of a character to know whether it is a two byte character in the GR area (high bit one) or a one byte character in the GL area (high bit zero).

2. In the above example of person name representation, explicit escape sequences precede each Hangul and Hanja string. These escape sequences are to meet the requirements of the code extension technique that specifies a switch to the default character repertoire before delimiters. In the previous example, it is assumed that the default character repertoire (ISO-646) is invoked to G0 code area and no character set to G1 area after delimiters ("^" and "=" signs). See 6.1.2.5.3 of PS 3.5.

I.3 EXAMPLE OF LONG TEXT VALUE REPRESENTATION IN THE KOREAN LANGUAGE WITHOUT EXPLICIT ESCAPE SEQUENCES BETWEEN CHARACTER SETS

Hangul (ISO IR 149) and ASCII (ISO 646) character sets can be used intermingled without explicit escape sequences between them. The Hangul character set ISO IR 149 is invoked to the G1 area, so this invocation doesn't affect the G0 area to which the ASCII character set has been invoked. The following is an example of a Long Text value representation which includes ASCII and Hangul character set.

(0008,0005) \ISO 2022 IR 149

The 1st line includes 한글. The 2nd line includes 한글, too. The 3rd line. Encoded String: **ESC 02/04 02/09 04/03** The 1st line includes 한글. **ESC 02/04 02/09 04/03** The 2nd line includes 한글, too. The 3rd line.

Once having invoked the ISO IR 149 character set to G1 area by the escape sequence in the head of line, one can use Hangul and ASCII intermixed in that line.

Copyright National Electrical Manufacturers Association
Provided by IHS under license with NEMA
No reproduction or networking permitted without license from IHS
Not for Resale

Table I-1.
CHARACTER SETS AND ESCAPE SEQUENCES USED IN THE EXAMPLES

Character Set *Description*	Component Group	Value of (0008,0005) *Defined Term*	ISO Registration *Number*	Standard for Code *Extension*	ESC Sequence		Character Set: Purpose of Use
Korean	First: Single-byte	Value 1: none	ISO-IR 6			GL	ISO 646:
	Second: Ideographic	Value 1: none	ISO-IR 6			GL	ISO 646: For delimiters
		Value 2: ISO 2022 IR 149	ISO-IR 149	ISO 2022	ESC 02/04 02/09 04/03	GR	KS X 1001: Hangul and Hanja
	Third: Phonetic	Value 1: none	ISO-IR 6			GL	ISO 646: For delimiters
		Value 2: ISO 2022 IR 149	ISO-IR 149	ISO 2022	ESC 02/04 02/09 04/03	GR	KS X 1001: Hangul and Hanja

Copyright National Electrical Manufacturers Association
Provided by IHS under license with NEMA
No reproduction or networking permitted without license from IHS
Not for Resale

Annex J
(Informative)
Index to Data Element Tags and UIDs

Tag	Document Pages
(0008,0005)	11, 12, 13, 14, 17, 18, 20, 22, 33, 84, 85, 86, 89
(0018,0020)	30
(0018,0082)	30
(0018,00FF)	16
(0028,0004)	54, 77
(0028,0100)	36, 38, 46, 48, 49, 61, 68
(0028,0101)	36, 37, 61, 68, 77
(0028,0102)	36, 61, 68
(0028,0103)	37
(0028,0106)	37
(0028,0107)	37
(0028,1101)	45, 47, 48, 50
(0028,1102)	45, 47, 48, 50
(0028,1103)	45, 47, 48, 50
(0028,1201)	45, 47, 48, 50
(0028,1202)	45, 47, 48, 50
(0028,1203)	45, 47, 48, 50
(0028,1221)	45, 47, 48, 50
(0028,1222)	45, 47, 48, 50
(0028,1223)	45, 47, 48, 50
(0028,3002)	46, 47, 48, 51
(0028,3006)	46, 47, 48, 51
(4008,0212)	23
(50xx,0103)	45
(50xx,2002)	45, 46, 48, 50
(50xx,200C)	45, 46, 48, 50
(50xx,3000)	45, 46, 48, 50
(5400,0110)	40
(5400,0112)	40
(5400,1004)	40
(5400,100A)	40
(5400,1010)	40, 45, 46, 48, 50
(60xx,0100)	37, 46, 48
(60xx,0102)	37
(60xx,3000)	36, 37, 45, 46, 48, 50
(7FE0,0010)	36, 37, 45, 46, 47, 49, 61
(FFFE,E000)	31, 49
(FFFE,E00D)	31
(FFFE,E0DD)	31, 50
1.2.840.10008.1.2	43
1.2.840.10008.1.2.4.50	44, 54, 75
1.2.840.10008.1.2.4.51	44, 54, 75
1.2.840.10008.1.2.4.52	54, 75
1.2.840.10008.1.2.4.53	54, 75
1.2.840.10008.1.2.4.54	54, 75
1.2.840.10008.1.2.4.55	54, 75
1.2.840.10008.1.2.4.56	54, 75
1.2.840.10008.1.2.4.57	54, 75
1.2.840.10008.1.2.4.58	54, 75
1.2.840.10008.1.2.4.59	54, 75
1.2.840.10008.1.2.4.60	54, 75
1.2.840.10008.1.2.4.61	54, 75

Copyright National Electrical Manufacturers Association
Provided by IHS under license with NEMA
No reproduction or networking permitted without license from IHS
Not for Resale

1.2.840.10008.1.2.4.62 ..... 54, 75
1.2.840.10008.1.2.4.63 ..... 54, 75
1.2.840.10008.1.2.4.64 ..... 54, 75
1.2.840.10008.1.2.4.65 ..... 54, 75
1.2.840.10008.1.2.4.66 ..... 54, 75
1.2.840.10008.1.2.4.70 ..... 43, 54, 75

Copyright National Electrical Manufacturers Association
Provided by IHS under license with NEMA
No reproduction or networking permitted without license from IHS
Not for Resale