# DICOM

## *Part 2*

# Conformance

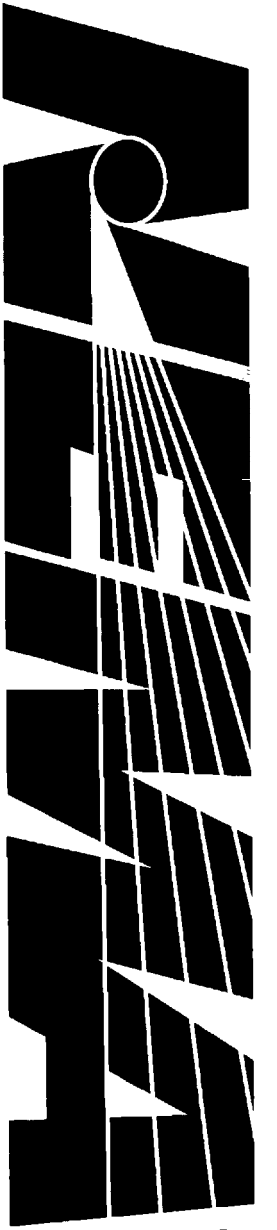

DICOM®

*Digital Imaging and Communications in Medicine*

**Reproduced by**

GLOBAL ENGINEERING DOCUMENTS™
An *IHS GROUP* Company

with the Permission of NEMA Under Royalty Agreement

Copyright National Electrical Manufacturers Association
Provided by IHS under license with NEMA
No reproduction or networking permitted without license from IHS Not for Resale

# Digital Imaging and Communications in Medicine (DICOM)

## Part 2: Conformance

*Published by*

**National Electrical Manufacturers Association**
1300 N. 17th Street
Rosslyn, Virginia 22209 USA

© Copyright 2000 by the National Electrical Manufacturers Association. All rights including translation into other languages, reserved under the Universal Copyright Convention, the Berne Convention or the Protection of Literacy and Artistic Works, and the International and Pan American Copyright Conventions.

- Official Standard -

Copyright National Electrical Manufacturers Association
Provided by IHS under license with NEMA
No reproduction or networking permitted without license from IHS Not for Resale

Table of Contents

Foreword ..... vi
1 Scope and Field of Application ..... 1
2 Normative References ..... 1
3 Definitions ..... 1
3.1 REFERENCE MODEL DEFINITIONS ..... 2
3.2 ACSE SERVICE DEFINITIONS ..... 2
3.3 PRESENTATION SERVICE DEFINITIONS ..... 2
3.4 DICOM INTRODUCTION AND OVERVIEW DEFINITIONS ..... 2
3.5 DICOM INFORMATION OBJECT DEFINITIONS ..... 2
3.6 DICOM SERVICE CLASS SPECIFICATION DEFINITIONS ..... 2
3.7 DICOM DATA STRUCTURE AND ENCODING DEFINITIONS ..... 3
3.8 DICOM MESSAGE EXCHANGE DEFINITIONS ..... 3
3.9 DICOM UPPER LAYER SERVICE DEFINITIONS ..... 3
3.10 MEDIA STORAGE AND FILE FORMAT FOR DATA INTERCHANGE ..... 3
3.11 DICOM CONFORMANCE ..... 3
4 Symbols and Abbreviations ..... 5
5 Conventions ..... 6
5.1 APPLICATION DATA FLOW DIAGRAM ..... 6
5.1.1 Application Entity ..... 6
5.1.2 Real-World Activity ..... 6
5.1.3 Local Relationships ..... 6
5.1.4 Network Associations ..... 7
5.1.5 Media Storage File-set Access ..... 7
6 Purpose of a Conformance Statement ..... 8
6.1 OVERVIEW OF NETWORKING SECTION FOR CONFORMANCE STATEMENTS ..... 9
6.2 OVERVIEW OF MEDIA STORAGE SECTION FOR CONFORMANCE STATEMENTS ..... 9
7 Conformance Requirements ..... 10
7.1 DICOM NETWORK CONFORMANCE REQUIREMENTS ..... 10
7.2 DICOM MEDIA INTERCHANGE CONFORMANCE REQUIREMENTS ..... 10
7.3 RULES GOVERNING TYPES OF SOP CLASSES ..... 11
7.4 RULES GOVERNING TYPES OF APPLICATION PROFILES ..... 13
7.4.1 Standard Application Profile ..... 13
7.4.2 Augmented Application Profile ..... 13
7.4.3 Private Application Profile ..... 14
7.4 CONFORMANCE OF DICOM MEDIA ..... 14
7.5 SECURITY PROFILES ..... 15
Annex A (Normative) DICOM Conformance Statement Template ..... 16
A.0 INTRODUCTION ..... 16
A.1 IMPLEMENTATION MODEL ..... 16
A.1.1 Application Data Flow Diagram ..... 16

Copyright National Electrical Manufacturers Association
Provided by IHS under license with NEMA
No reproduction or networking permitted without license from IHS



Not for Resale

STD-NEMA PS 3.2-ENGL 2000 6470247 0525087 9T0

A.1.2 Functional Definitions of AE's ..... 17
A.1.3 Sequencing of Real-World Activities ..... 17
A.2 AE SPECIFICATIONS ..... 17
A.2.x AEx - Specification ..... 17
A.2.x.1 Association Establishment Policies ..... 18
A.2.x.1.1 General ..... 18
A.2.x.1.2 Number of Associations ..... 18
A.2.x.1.3 Asynchronous Nature ..... 18
A.2.x.1.4 Implementation Identifying Information ..... 18
A.2.x.2 Association Initiation by Real-World Activity ..... 18
A.2.x.2.i Real-World Activity i ..... 18
A.2.x.2.i.1 Associated Real-World Activity ..... 18
A.2.x.2.i.2 Proposed Presentation Contexts ..... 18
A.2.x.2.i.2.j SOP Specific Conformance Statement for SOP Class j ..... 19
A.2.x.3 Association Acceptance Policy ..... 19
A.2.x.3.i Real-World Activity i ..... 20
A.2.x.3.i.1 Associated Real-World Activity ..... 20
A.2.x.3.i.2 Presentation Context table ..... 20
A.2.x.3.i.2.j SOP Specific Conformance for SOP Class j ..... 21
A.2.x.3.i.3 Presentation Context Acceptance Criterion ..... 21
A.2.x.3.i.4 Transfer Syntax Selection Policies ..... 21
A.3 COMMUNICATION PROFILES ..... 21
A.3.1 Supported Communication Stacks (Parts 8,9) ..... 21
A.3.x OSI Stack ..... 21
A.3.x.1 International Standardized Profile (ISP) ..... 21
A.3.x.y API ..... 21
A.3.x.z Physical Media Support ..... 21
A.3.x TCP/IP Stack ..... 21
A.3.x.y API ..... 21
A.3.x.z Physical Media Support ..... 21
A.3.x Point-to-Point Stack ..... 21
A.4 EXTENSIONS/SPECIALIZATIONS/PRIVATIZATIONS ..... 22
A.4.1 Standard Extended/Specialized/Private SOPs ..... 22
A.4.1.i Standard Extended/Specialized/Private SOP i ..... 22
A.4.2 Private Transfer Syntaxes ..... 22
A.4.2.i Private Transfer Syntax i ..... 22
A.5 CONFIGURATION ..... 22
A.5.1 AE Title/Presentation Address Mapping ..... 22
A.5.2 Configurable Parameters ..... 22
A.6 SUPPORT OF EXTENDED CHARACTER SETS ..... 22
A.7 CODES AND CONTROLLED TERMINOLOGY ..... 23
A.8 SECURITY PROFILES ..... 23
Annex B (Informative) DICOM Conformance Statement Sample ..... 24
B.0 INTRODUCTION ..... 24
B.1 IMPLEMENTATION MODEL ..... 24
B.1.1 Application Data Flow Diagram ..... 24
B.1.2 Functional Definitions of AE's ..... 25
B.1.3 Sequencing of Real-World Activities ..... 25
B.2 AE SPECIFICATIONS ..... 25

Copyright National Electrical Manufacturers Association
Provided by IHS under license with NEMA
No reproduction or networking permitted without license from IHS



NGL 2000 Not for Resale 6470247 0525088 837

B.2.1 DIS and DAT - Specification ..... 25
B.2.1.1 Association Establishment Policies ..... 25
B.2.1.1.1 General ..... 25
B.2.1.1.2 Number of Associations ..... 26
B.2.1.1.3 Asynchronous Nature ..... 26
B.2.1.1.4 Implementation Identifying Information ..... 26
B.2.1.2 Association Initiation Policy ..... 26
B.2.1.2.1 Transfer of Image Encoded with Implicit VR ..... 26
B.2.1.2.1.1 Associated Real-World Activity ..... 26
B.2.1.2.1.2 Proposed Presentation Contexts ..... 26
B.2.1.2.2 Transfer of Image Encoded with Explicit VR and "-d" Specified ..... 27
B.2.1.2.2.1 Associated Real-World Activity ..... 27
B.2.1.2.2.2 Proposed Presentation Contexts ..... 27
B.2.1.2.3 Transfer of Image Encoded with Explicit VR and "-d" Not Specified ..... 27
B.2.1.2.3.1 Associated Real-World Activity ..... 27
B.2.1.2.3.2 Proposed Presentation Contexts ..... 28
B.2.1.2.4 SOP Specific Conformance ..... 28
B.2.1.3 Association Acceptance Policy ..... 29
B.2.1.3.1 Associated Real-World Activity ..... 29
B.2.1.3.2 Presentation Context Table ..... 29
B.2.1.3.3 SOP Specific Conformance ..... 30
B.2.1.3.3.1 SOP Specific Conformance to Verification SOP Class ..... 30
B.2.1.3.3.2 SOP Specific Conformance to Storage SOP Classes ..... 30
B.2.1.3.4 Presentation Context Acceptance Criterion ..... 31
B.2.1.3.5 Transfer Syntax Selection Policies ..... 31
B.3 COMMUNICATION PROFILES ..... 32
B.3.1 Supported Communications Stacks (parts 8,9) ..... 32
B.3.2 TCP/IP Stack ..... 32
B.3.2.1 Physical Media Support ..... 32
B.4 EXTENSIONS/SPECIALIZATIONS/PRIVATIZATIONS ..... 32
B.5 CONFIGURATION ..... 32
B.5.1 AE Title/Presentation Address Mapping ..... 32
B.5.2 Configurable Parameters ..... 32
B.5.2.1 disconfig ..... 32
B.5.2.2 datconfig ..... 33
B.6 SUPPORT OF EXTENDED CHARACTER SETS ..... 33
B.7 CODES AND CONTROLLED TERMINOLOGY ..... 33
Annex C (Normative) DICOM Conformance Statement Template for Media Storage Application Profiles ..... 35
C.0 INTRODUCTION ..... 35
C.1 IMPLEMENTATION MODEL ..... 35
C.1.1 Application Data Flow Diagram ..... 35
C.1.2 Functional definitions of AE's ..... 36
C.1.3 Sequencing of Real World Activities ..... 36
C.1.4 FILE META INFORMATION FOR IMPLEMENTATION CLASS AND VERSION ..... 36
C.2 AE SPECIFICATIONS ..... 37
C.2.x AEx - Specification ..... 37
C.2.x.1 File Meta Information for the Application Entity x ..... 37
C.2.x.2 Real-World Activities ..... 37
C.2.x.2.i Real-World Activity i ..... 37
C.2.x.2.i.1 Media Storage Application Profile ..... 37



Copyright National Electrical Manufacturers Association
Provided by IHS under license with NEMA
No reproduction or networking permitted without license from IHS
Not for Resale

C.2.x.2.i.1.y Options ..... 38
C.3 AUGMENTED AND PRIVATE APPLICATION PROFILES ..... 38
C.3.1 Augmented Application Profiles ..... 38
C.3.1.x Augmented Application Profile x ..... 38
C.3.1.x.1 SOP Class Augmentations ..... 38
C.3.1.x.2 Directory Augmentations ..... 38
C.3.1.x.3 Other Augmentations ..... 38
C.3.2 Private Application Profiles ..... 38
C.4 EXTENSIONS, SPECIALIZATIONS, AND PRIVATIZATIONS OF SOP CLASSES AND TRANSFER SYNTAXES ..... 38
C.4.1 Extensions, Specializations, and Privatizations of SOP Classes ..... 38
C.4.1.x SOP Specific Conformance Statement for SOP Class x ..... 38
C.4.2 Private Transfer Syntax Specification ..... 39
C.5 CONFIGURATION ..... 39
C.6 SUPPORT OF EXTENDED CHARACTER SETS ..... 39
C.7 CODES AND CONTROLLED TERMINOLOGY ..... 39
C.8 SECURITY PROFILES ..... 39
Annex D: (Informative) Example of a DICOM Conformance Statement for a DICOM Media Storage Implementation ..... 40
D.0 INTRODUCTION ..... 40
D.1 IMPLEMENTATION MODEL: MOD UPDATE DEVICE ..... 40
D.1.1 Application Data Flow Diagram: MOD Update Device Real-World relationship ..... 40
D.1.2 Functional Definition of Application Entities ..... 41
D.1.3 Sequencing Requirements ..... 41
D.1.4 File Meta Information Options (see PS 3.10) ..... 41
D.2 AE SPECIFICATIONS ..... 41
D.2.1 MOD Update Specification ..... 41
D.2.1.1 File Meta Information for the Application Entity ..... 42
D.2.1.2 Real-World Activities for this Application Entity ..... 42
D.2.1.2.1 Real-World Activity: Create MOD Request ..... 42
D.2.1.2.1.1 Application Profiles for the RWA: Create MOD ..... 42
D.2.1.2.2 Real-World Activity: Display Directory ..... 42
D.2.1.2.2.1 Application Profiles for the RWA: MOD Directory Listing ..... 42
D.2.1.2.3 Real-World Activity: Copy to Local Storage ..... 42
D.2.1.2.3.1 Application Profiles for the RWA: Copy to Local Storage ..... 42
D.2.1.2.4 Real-World Activity: Update MOD ..... 42
D.2.1.2.4.1 Application Profiles for the RWA: Update Media Request ..... 43
D.3 AUGMENTED AND PRIVATE PROFILES ..... 43
D.3.1 Augmented Profiles ..... 43
D.3.1.1 AUG-MODUP-MOD650 ..... 43
D.3.1.1.1 SOP Class Augmentations ..... 43
D.3.1.1.2 Directory Augmentations ..... 44
D.3.1.1.3 Other Augmentations ..... 44
D.3.1.2 AUG-MODUP-MOD12 Application Profile ..... 44
D.3.1.2.1 SOP Class Augmentations ..... 44
D.3.1.2.2 Directory Augmentations ..... 44
D.3.1.2.3 Other Augmentations ..... 44
D.3.2 Private Profiles ..... 44



Copyright National Electrical Manufacturers Association
Provided by IHS under license with NEMA
No reproduction or networking permitted without license from IHS
3-2-ENGL 2000 6470247 0525090 495
Not for Resale

D.4 EXTENSIONS, SPECIALIZATIONS, PRIVATIZATIONS OF SOP CLASSES AND TRANSFER SYNTAXES ..... 45
D.5 CONFIGURATION ..... 45
D.6 CHARACTER SETS ..... 45
D.7 CODES AND CONTROLLED TERMINOLOGY ..... 45



Copyright National Electrical Manufacturers Association
Provided by IHS under license with NEMA
No reproduction or networking permitted without license from IHS
Not for Resale

PS 3 2 ENGL 2000 1470247 0525091 321

## Foreword

The American College of Radiology (ACR) and the National Electrical Manufacturers Association (NEMA) formed a joint committee to develop a standard for Digital Imaging and Communications in Medicine (DICOM). This DICOM Standard was developed according to the NEMA procedures.

This standard is developed in liaison with other standardization organizations including CEN TC251 in Europe and JIRA in Japan, with review also by other organizations including IEEE, HL7 and ANSI in the USA.

The DICOM Standard is structured as a multi-part document using the guidelines established in the following document:

- ISO/IEC Directives, 1989 Part 3: Drafting and Presentation of International Standards.

This document is one part of the DICOM Standard which consists of the following parts:

PS 3.1: Introduction and Overview

PS 3.2: Conformance

PS 3.3: Information Object Definitions

PS 3.4: Service Class Specifications

PS 3.5: Data Structures and Encoding

PS 3.6: Data Dictionary

PS 3.7: Message Exchange

PS 3.8: Network Communication Support for Message Exchange

PS 3.9: Point-to-Point Communication Support for Message Exchange

PS 3.10: Media Storage and File Format for Data Interchange

PS 3.11: Media Storage Application Profiles

PS 3.12: Storage Functions and Media Formats for Data Interchange

PS 3.13: Print Management Point-to-Point Communication Support

PS 3.14: Grayscale Display Function

PS 3.15: Security Profiles

These parts are related but independent documents. Their development level and approval status may differ. Additional parts may be added to this multi-part standard. PS 3.1 should be used as the base reference for the current parts of this standard.



Copyright National Electrical Manufacturers Association
Provided by IHS under license with NEMA
No reproduction or networking permitted without license from IHS
3-2-ENGL 2000 ■ 6470247 0525092 268 ■
Not for Resale

# 1 Scope and Field of Application

PS 3.2 defines principles that implementations claiming conformance to the Standard shall follow. PS 3.2 specifies:

- the minimum general conformance requirements that must be met by any implementation claiming conformance to the DICOM Standard. Additional conformance requirements for particular features, Service Classes, Information Objects, and communications protocols may be found in the conformance sections of other Parts of the DICOM Standard;
- the purpose and structure of a Conformance Statement. PS 3.2 provides a framework by which conformance information can be placed into a Conformance Statement as dictated by the conformance sections of other Parts of the DICOM Standard.

The DICOM Standard does not specify:

- testing or validation procedures to assess an implementation's conformance to the Standard;
- testing or validation procedures to assess whether an implementation matches to its Conformance Statement;
- what optional features, Service Classes, or Information Objects should be supported for a given type of device.

# 2 Normative References

The following standards contain provisions which, through reference in this text, constitute provisions of this Standard. At the time of publication, the editions indicated were valid. All standards are subject to revision, and parties to agreements based on this Standard are encouraged to investigate the possibilities of applying the most recent editions of the standards indicated below.

ISO/IEC Directives 1989 Part 3 - Drafting and presentation of International Standards.

ISO 7498-1 Information Processing Systems - Open Systems Interconnection - Basic Reference Model.

ISO 8649:1988 Information Processing Systems -- Open Systems Interconnection - Service definition for the Association Control Service Element (ACSE).

ISO 8822:1988 Information Processing Systems -- Open Systems Interconnection - Connection oriented presentation service definition.

# 3 Definitions

For the purposes of this Standard the following definitions apply.



Copyright National Electrical Manufacturers Association
Provided by IHS under license with NEMA
No reproduction or networking permitted without license from IHS
Not for Resale
3 3-ENGL 2000 LH70247 0525093 1T4

### 3.1 REFERENCE MODEL DEFINITIONS

This Part makes use of the following terms defined in ISO 7498-1:

a) Application Entity
b) Application Entity Title
c) Protocol Data Unit
d) Transfer Syntax.

### 3.2 ACSE SERVICE DEFINITIONS

This Part makes use of the following terms defined in ISO 8649:

a) Association or Application Association
b) Association Initiator.

### 3.3 PRESENTATION SERVICE DEFINITIONS

This Part makes use of the following terms defined in ISO 8822:

a) Abstract Syntax
b) Abstract Syntax Name
c) Presentation Context
d) Transfer Syntax
e) Transfer Syntax Name.

### 3.4 DICOM INTRODUCTION AND OVERVIEW DEFINITIONS

This Part makes use of the following terms defined in PS 3.1:

a) Information Object

### 3.5 DICOM INFORMATION OBJECT DEFINITIONS

This Part makes use of the following terms defined in PS 3.3:

a) Information Object Definition (IOD).

### 3.6 DICOM SERVICE CLASS SPECIFICATION DEFINITIONS

This Part makes use of the following terms defined in PS 3.4:

a) Real-World Activity
b) Service Class.
c) Service Class User (SCU)
d) Service Class Provider (SCP)
e) Service-Object Pair (SOP) Class
f) Meta SOP Class.



Copyright National Electrical Manufacturers Association
Provided by IHS under license with NEMA
No reproduction or networking permitted without license from IHS
Not for Resale

PS•2-ENGL 2000 6470247 0525094 030

### 3.7 DICOM DATA STRUCTURE AND ENCODING DEFINITIONS

This Part makes use of the following terms defined in PS 3.5:

a) DICOM Defined UID
b) Privately Defined UID
c) Transfer Syntax: (Standard and Private)
d) Unique Identifier (UID).

### 3.8 DICOM MESSAGE EXCHANGE DEFINITIONS

This Part makes use of the following terms defined in PS 3.7:

a) Extended Negotiation
b) Implementation Class UID.

### 3.9 DICOM UPPER LAYER SERVICE DEFINITIONS

This Part makes use of the following terms defined in PS 3.8:

a) Unique Identifier (UID)
b) DICOM Upper Layer Service
c) Presentation Address.

### 3.10 MEDIA STORAGE AND FILE FORMAT FOR DATA INTERCHANGE

This Part makes use of the following terms defined in PS 3.10:

a) File-set
b) File-set Creator (FSC)
c) File-set Reader (FSR)
d) File-set Updater (FSU)
e) Application Profile

### 3.11 DICOM CONFORMANCE

This Part uses the following definitions:

**3.11.1 Conformance Statement:** A formal statement associated with a specific implementation of the DICOM Standard. It specifies the Service Classes, Information Objects, Communications Protocols and Media Storage Application Profiles supported by the implementation.

**3.11.2 Standard SOP Class:** A SOP Class defined in the DICOM Standard that is used in an implementation with no modifications.

**3.11.3 Standard Extended SOP Class:** A SOP Class defined in the DICOM Standard extended in an implementation with additional Type 3 Attributes. The additional Attributes may either be drawn from the Data Dictionary in PS 3.6, or may be Private Attributes. The semantics of the related Standard SOP Class shall not be modified by the additional Type 3 Attributes when absent. Therefore, the Standard Extended SOP Class utilizes the same UID as the related Standard SOP Class.



Copyright National Electrical Manufacturers Association
Provided by IHS under license with NEMA
No reproduction or networking permitted without license from IHS
2000 Not for Resale 70247 0525095 T77

Note: IODs from a Standard Extended SOP Class may be freely exchanged between DICOM implementations since implementations unfamiliar with the additional Type 3 Attributes would simply ignore them.

**3.11.4 Specialized SOP Class:** A SOP Class derived from a Standard SOP Class that has been specialized in an implementation by additional Type 1, 1C, 2, 2C, or 3 Attributes. The additional Attributes may either be drawn from the Data Dictionary in PS 3.6, or may be Private Attributes. Since the semantics of the related Standard SOP Class may be modified by the additional Attributes, a Specialized SOP Class utilizes a Privately Defined UID which differs from the UID for the related Standard SOP Class.

Note: Since a Specialized SOP Class has a different UID than a Standard or Standard Extended SOP Class, other DICOM implementations may not recognize the Specialized SOP Class. Because of this limitation, a Specialized SOP Class should only be used when a Standard or Standard Extended SOP Class would not be appropriate. Before different implementations can exchange IODs in a Specialized SOP Class, the implementations must agree on the UID, content (in particular the additional Type 1, 1C, 2, and 2C Attributes), and semantics of the Specialized SOP Class. A Specialized SOP Class may be used to create a new or experimental SOP Class that is closely related to a Standard SOP Class. An implementation publishes a Specialized SOP Class with the hope that other implementations might use it.

**3.11.5 Private SOP Class:** A SOP Class that is not defined in the DICOM Standard, but is published in an implementation's Conformance Statement.

Note: Since a Private SOP Class is not defined in the DICOM Standard, other DICOM implementations may not recognize the Private SOP Class. Because of this limitation, a Private SOP Class should only be used when a Standard or Standard Extended SOP Class would not be appropriate. In order for different implementations to exchange IODs in a Private SOP Class the implementations must agree on the UID, content (in particular the Type 1, 1C, 2, and 2C Attributes), and semantics of the Private SOP Class. A Private SOP class may be used to create a totally new or experimental SOP Class. An implementation publishes a Private SOP Class with the hope that other implementations might use it.

**3.11.6 Standard Attribute:** An Attribute defined in the Data Dictionary in PS 3.6.

**3.11.7 Private Attribute:** An Attribute that is not defined in the DICOM Standard.

**3.11.8 Standard Application Profile:** An Application Profile defined in the DICOM Standard that is used in an implementation with no modifications.

**3.11.9 Augmented Application Profile:** An Application Profile derived from a Standard Application Profile by incorporating support for additional Standard or Standard Extended SOP Classes.

**3.11.10 Private Application Profile:** An Application Profile that is not defined in the DICOM Standard, but is published in an implementation's Conformance Statement.

**3.11.11 Security Profile:** a mechanism for selecting an appropriate set of choices from the Parts of DICOM along with corresponding security mechanisms (e.g. encryption algorithms) for the support of security facilities.



Copyright National Electrical Manufacturers Association
Provided by IHS under license with NEMA
No reproduction or networking permitted without license from IHS
3.2-ENGL 2000 4470247 0525096 903
Not for Resale

# 4 Symbols and Abbreviations

The following symbols and abbreviations are used in this Part.

| | |
|---|---|
| ACR | American College of Radiology |
| ACSE | Association Control Service Element |
| AE | Application Entity |
| ANSI | American National Standards Institute |
| AP | Application Profile |
| API | Application Programming Interface |
| ASCII | American Standard Code for Information Interchange |
| CEN TC251 | Comite Europeen de Normalisation - Technical Committee 251 - Medical Informatics |
| DICOM | Digital Imaging and Communications in Medicine |
| DIMSE | DICOM Message Service Element |
| DIMSE-C | DICOM Message Service Element-Composite |
| DIMSE-N | DICOM Message Service Element-Normalized |
| FSC | File-set Creator |
| FSR | File-set Reader |
| FSU | File-set Updater |
| HISPP | Healthcare Informatics Standards Planning Panel |
| HL7 | Health Level 7 |
| IE | Information Entity |
| IEEE | Institute of Electrical and Electronics Engineers |
| IOD | Information Object Definition |
| ISO | International Standards Organization |
| ISP | International Standardized Profile |
| JIRA | Japanese Industry Radiology Apparatus |
| MSDS | Healthcare Message Standard Developers Sub-Committee |
| NEMA | National Electrical Manufacturers Association |
| OSI | Open Systems Interconnection |
| PDU | Protocol Data Unit |
| RWA | Real-World Activity |
| SCP | Service Class Provider |
| SCU | Service Class User |
| SOP | Service-Object Pair |
| TCP/IP | Transmission Control Protocol/Internet Protocol |
| UID | Unique Identifier |



Copyright National Electrical Manufacturers Association
Provided by IHS under license with NEMA
No reproduction or networking permitted without license from IHS

PS 3.2-ENGL 2000 Not for Resale 5470247 0525097 84T

# 5 Conventions

## 5.1 APPLICATION DATA FLOW DIAGRAM

In a Conformance Statement, the relationships between Real-World Activities and Application Entities are illustrated by an Application Data Flow Diagram.

### 5.1.1 Application Entity

An Application Entity is depicted as a box within an Application Data Flow Diagram as shown in Figure 5.1-1.




**Figure 5.1-1 - Application Entity Convention**

### 5.1.2 Real-World Activity

A Real-World Activity is depicted as a circle within an Application Data Flow Diagram as shown in Figure 5.1-2.




**Figure 5.1-2 - Real-World Activity Convention**

Circles representing multiple Real-World Activities may overlap, indicating a degree of overlap in the Real-World Activities.

### 5.1.3 Local Relationships

A relationship between a local Real-World Activity and an Application Entity is depicted within an Application Data Flow Diagram by placing the local Real-World Activity to the left of the related Application Entity with a double headed arrow drawn between them as shown in Figure 5.1-3.

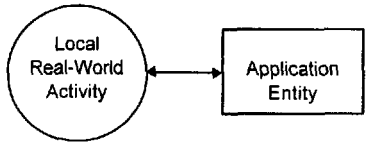


**Figure 5.1-3 - Local Relationship Convention**

An Application Entity may be associated with multiple Real-World Activities.

A Real-World Activity may be associated with multiple Application Entities.



Copyright National Electrical Manufacturers Association
Provided by IHS under license with NEMA
No reproduction or networking permitted without license from IHS
Not for Resale

### 5.1.4 Network Associations

An association between a local Application Entity and a remote Application Entity over a network supporting a remote Real-World Activity is depicted within an Application Data Flow Diagram by placing the remote Real-World Activity to the right of the related local Application Entity with one or two arrows drawn between them as shown in Figure 5.1-4. The dashed line represents the DICOM Standard Interface between the local Application Entities, and whatever remote Application Entities that handle the remote Real-World Activities. An arrow from the local Application Entity to the remote Real-World Activity indicates that an occurrence of the local Real-World Activity will cause the local Application Entity to initiate an association for the purpose of causing the remote Real-World Activity to occur. An arrow from the remote Real-World Activity to the local Application Entity indicates that the local Application Entity expects to receive an association request when the remote Real-World Activity occurs, causing the local Application Entity to perform the local Real-World Activity.

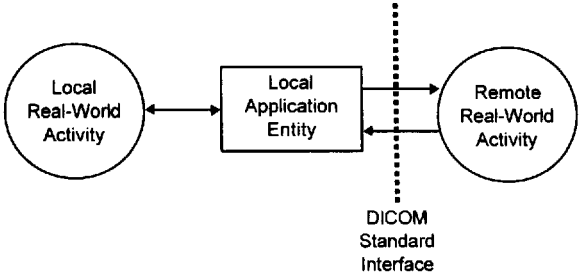


**Figure 5.1-4 - Associations Convention**

### 5.1.5 Media Storage File-set Access

Application Entities exchanging information on media use the DICOM File Service as specified in PS 3.10 for access to, or creation of, File-sets. This File Service provides operations that support three basic roles, which are File-set Creator (FSC), File-set Reader (FSR), and File-set Updater (FSU).

These roles are depicted on an Application Data Flow diagram by directional arrows placed between the local Application Entities and the DICOM Storage Media on which the roles are applied.

- File-set Creator (FSC), denoted by →;
- File-set Reader (FSR), denoted by ←;
- File-set Updater (FSU), denoted by ↔;
- Physical movement of the medium, denoted by — — ► (with or without arrowhead)

Figure 5.1-5 illustrates the three basic roles.

Copyright National Electrical Manufacturers Association
Provided by IHS under license with NEMA
No reproduction or networking permitted without license from IHS



Not for Resale

S1A•NEMA PS 3•E-ENGL 2000 ■ 6470247 0525099 612 ■

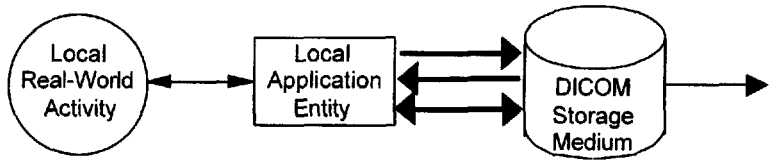


**Figure 5.1-5 - File-set Access**

The local interactions shown on the left between a local Real-World activity and a local Application Entity are depicted by a bi-directional arrow. The arrows on the right represent access by the local Application Entity to a File-set on the DICOM Storage Medium. When an Application Entity supports several roles, this combination is depicted with multiple arrows corresponding to each of the roles. The dotted arrow symbolizes the removable nature of media for an interchange application.

Note: The use of two arrows relative to an FSC and an FSR should be distinguished from the case where a double arrow relative to an FSU is used. For example, an FSU may update a File-set without creating a new File-set, whereas a combined FSC and FSR may be used to create and verify a File-set.

## 6 Purpose of a Conformance Statement

An implementation need not employ all the optional components of the DICOM Standard. After meeting the minimum general requirements, a conformant DICOM implementation may utilize whatever SOP Classes, communications protocols, Media Storage Application Profiles, optional (Type 3) Attributes, codes and controlled terminology, etc., needed to accomplish its designed task.

Note: In fact, it is expected that an implementation might only support the SOP Classes related to its Real World Activities. For example, a simple film digitizer may not support the SOP Classes for other imaging modalities since such support may not be required. On the other hand, a complex storage server might be required to support SOP Classes from multiple modalities in order to adequately function as a storage server. The choice of which components of the DICOM Standard are utilized by an implementation depends heavily on the intended application and is beyond the scope of this Standard.

In addition, the DICOM Standard allows an implementation to extend or specialize the DICOM defined SOP Classes, as well as define Private SOP classes.

A Conformance Statement allows a user to determine which optional components of the DICOM Standard are supported by a particular implementation, and what additional extensions or specializations an implementation adds. By comparing the Conformance Statements from two different implementations, a knowledgeable user should be able to determine whether and to what extent communications might be supported between the two implementations.

Different structures are used for the content of Conformance Statements depending on whether the implementation supports a DICOM network interface, a DICOM Media Storage interface, or both. In the latter case, a single Conformance Statement shall be provided which consists of a section for networking and a section for media storage.

Copyright National Electrical Manufacturers Association
Provided by IHS under license with NEMA
No reproduction or networking permitted without license from IHS



Not for Resale

STD•NEMA PS 3•2 ENGL 2000 ■ 3470247 0525100 164 ■

## 6.1 OVERVIEW OF NETWORKING SECTION FOR CONFORMANCE STATEMENTS

The networking section of a Conformance Statements consists of the following major parts:

- an Implementation Model which describes the Application Entities in the implementation with networking capability and how they relate to both local and remote Real-World Activities;
- a more detailed specification of each Application Entity, listing the SOP Classes supported and outlining the policies with which it initiates or accepts associations;
- for each Application Entity and Real-World Activity combination, a description of proposed (for Association Initiation) and acceptable (for Association Acceptance) Presentation Contexts;

Note: A Presentation Context consists of an Abstract Syntax plus a list of acceptable Transfer Syntaxes. The Abstract Syntax identifies one SOP Class or Meta SOP Class (a collection of related SOP Classes identified by a single Abstract Syntax UID). By listing the Application Entities with their proposed and accepted Presentation Contexts, the Conformance Statement is identifying the set of Information Objects and Service Classes which are recognized by this implementation;

- for each SOP Class related to an Abstract Syntax, a list of any SOP options supported;
- a set of communications protocols which this implementation supports;
- a description of any extensions, specializations, and publicly disclosed privatizations in this implementation;
- a section describing DICOM related configuration details;
- a description of any implementation details which may be related to DICOM conformance or interoperability;
- a description of what codes and controlled terminology mechanisms are used.

## 6.2 OVERVIEW OF MEDIA STORAGE SECTION FOR CONFORMANCE STATEMENTS

The media storage section of a Conformance Statements consists of the following major parts:

- an Implementation Model which describes the Application Entities in the implementation with media storage capability and how they relate to both local and remote Real-World Activities;
- a more detailed specification of each Application Entity listing the Media Storage Application Profiles supported (this defines SOP Classes supported and media selected), which outlines the policies with which it creates, reads, or updates File-sets on the media;
- a list of optional SOP Classes supported;
- for each Media Storage SOP Class related to a media storage Application Profile, a list of any SOP options supported;
- for each Media Storage SOP Class related to a media storage Application Profile, a list of optional Transfer Syntaxes supported;
- a description of any extensions, specializations, and publicly disclosed privatizations in this implementation such as Augmented or Private Application Profiles;
- a section describing DICOM related configuration details;
- a description of any implementation details which may be related to DICOM conformance or interoperability;
- a description of what codes and controlled terminology mechanisms are used.



Copyright National Electrical Manufacturers Association
Provided by IHS under license with NEMA
No reproduction or networking permitted without license from IHS IGL 2000 Not for Resale 470247 0525101 0T0

# 7 Conformance Requirements

An implementation claiming DICOM conformance may choose to support one of the following:

1) network conformance according to Section 7.1 (DICOM Network Conformance Requirements);

2) media storage conformance according to Section 7.2 (DICOM Media Storage Conformance Requirements);

3) both of the above.

## 7.1 DICOM NETWORK CONFORMANCE REQUIREMENTS

An implementation claiming DICOM network conformance shall:

- conform to the minimum conformance requirements defined in this section;
- provide with the implementation a Conformance Statement structured according to the rules and policies in this Part including Annex A;
- conform to at least one Standard or Standard Extended SOP class as defined in PS 3.4;

Note: Conformance to a Standard or Standard Extended SOP class implies conformance to the related IOD outlined in PS 3.3, the Data Elements defined in PS 3.6, and the operations and notifications defined in PS 3.7.

- comply with the rules governing SOP Class types outlined in Section 7.3;
- accept a Presentation Context for the Verification SOP Class as an SCP if the implementation accepts any DICOM association requests;
- produce and/or process Data Sets as defined in PS 3.5;

Note: Conformance to PS 3.5 also implies conformance to PS 3.6.

- obtain legitimate right to a registered <org id> for creating UIDs (see PS 3.5) if an implementation utilizes Privately Defined UIDs (i.e., UIDs not defined in the DICOM Standard);
- support one or more of the following communications modes:
  a) TCP/IP (See PS 3.8),
  b) OSI (See PS 3.8),
  c) Point to Point (See PS 3.9).

## 7.2 DICOM MEDIA INTERCHANGE CONFORMANCE REQUIREMENTS

An implementation claiming DICOM Media Interchange conformance shall:

- conform to the minimum conformance requirements defined in this section;
- provide with the implementation a Conformance Statement structured according to the rules and policies in this Part including Annex C;



Copyright National Electrical Manufacturers Association
Provided by IHS under license with NEMA
No reproduction or networking permitted without license from IHS
PS 3.2-ENGL 2000 Not for Resale 5470247 0525102 T37

- conform to at least one Standard Application Profile as defined in PS 3.11;
- support one of the Physical Media and associated Media Format, as specified by PS 3.12;
- comply with the rules governing SOP Class types outlined in Section 7.3;
- comply with the specific rules governing media storage Application Profile according to their types as specfified in Section 7.4. No other types of Application Profiles may be used;
- read as an FSR or FSU all SOP Classes defined as mandatory by each of the supported Application Profiles encoded in any of the mandatory Transfer Syntaxes.
- write as an FSC or FSU all SOP Classes defined as mandatory by each of the supported Application Profiles in one of the mandatory Transfer Syntaxes;
- be able to gracefully ignore any Standard, Standard Extended, specialized or Private SOP Classes which may be present on the Storage Medium but are not defined in any of the Application Profiles to which conformance is claimed.

Note: There may be more than one Application Profile used to create or read a File-set on a single physical medium (e.g., a medium may have a File-set created with Standard and Augmented Application Profiles).

- be able to gracefully ignore Directory Records in the DICOMDIR file which do not correspond to Directory Records defined in any of the Application Profiles to which conformance is claimed.
- access the File-set(s) on media using the standard roles defined in PS 3.10;
- produce and/or process Data Sets as defined in PS 3.5 encapsulated in DICOM Files;

Note: Conformance to PS 3.5 also implies conformance to PS 3.6

- obtain legitimate right to a registered <org id> for creating UIDs (see PS 3.5) if an implementation utilizes Privately Defined UIDs (i.e., UIDs not defined in the DICOM Standard).

An implementation which does not meet all the above requirements shall not claim conformance to DICOM for Media Storage Interchange.

### 7.3 RULES GOVERNING TYPES OF SOP CLASSES

Each SOP Class published in a Conformance Statement is one of four basic types. Each SOP Class in an implementation claiming conformance to the DICOM Standard shall be handled in accordance with the following rules, as dictated by the type of SOP Class.

Standard SOP Classes conform to all relevant Parts of the DICOM Standard with no additions or changes.

To claim conformance to a Standard SOP Class, an implementation shall make a declaration of this fact in its Conformance Statement, and identify its selected options, roles, and behavior.

Standard Extended SOP Classes shall:

a) be a proper super set of one Standard SOP Class;
b) not change the semantics of any Standard Attribute of that Standard SOP Class;
c) not contain any Private Type 1, 1C, 2, or 2C Attributes, nor add additional Standard Type 1, 1C, 2 or 2C Attributes;
d) not change any Standard Type 3 Attributes to Type 1, 1C, 2, or 2C;
e) use the same UID as the Standard SOP Class on which it is based.



Copyright National Electrical Manufacturers Association
Provided by IHS under license with NEMA
No reproduction or networking permitted without license from IHS NGL 2000 Not for Resale 6470247 0525103 973

A Standard Extended SOP Class may include Standard and/or Private Type 3 Attributes beyond those defined in the IOD on which it is based as long as the Conformance Statement identifies the added Attributes and defines their relationship with the PS 3.3 information model.

An implementation claiming conformance with a Standard Extended SOP Class shall identify in its Conformance Statement the Standard SOP Class being extended, the options, roles, and behavior selected, and describe the Attributes being added with the Standard SOP Class's IOD Model and Modules.

Specialized SOP Classes shall:

a) be completely conformant to relevant Parts of the DICOM Standard;

b) be based on a Standard SOP Class, i.e.:

- contain all the Type 1, 1C, 2, and 2C Attributes of Standard SOP Class on which it is based;
- not change the semantics of any Standard Attribute;

c) use a Privately Defined UID for its SOP Class (i.e., shall not be identified with a DICOM Defined UID);

d) be based on the DICOM Information Model in PS 3.3 and PS 3.4.

Specialized SOP Classes may:

a) contain additional Standard and/or Private Type 1, 1C, 2, or 2C Attributes;

b) add Private and Standard Type 3 Attributes which may or may not be published in the Conformance Statement.

Note: The usage of any unpublished Attributes may be ignored by other users and providers of the Specialized SOP Class.

An implementation claiming conformance with a Specialized SOP Class shall include in its Conformance Statement the identity of the Standard SOP Class being specialized, a description of usage of all Standard and Private Type 1, 1C, 2, and 2C Attributes in the Specialized SOP Class, and the associated Privately Defined UIDs.

Private SOP Classes shall:

a) be completely conformant to relevant Parts of the DICOM Standard with the possible exception that support of the DICOM Default Transfer Syntax or a Transfer Syntax mandated by a media storage Application Profile is not required;

b) not change the PS 3.6 specification of any Standard Attributes;

c) use a Privately Defined UID for its SOP Class (i.e., shall not be identified with a DICOM Defined UID);

d) not change existing DIMSE Services or create new ones;

e) not change existing DICOM File Services defined in PS 3.10 or extend them in a manner which jeopardizes interoperability.

Private SOP Classes may:

a) use or apply DIMSE Services to privately defined or altered IODs (i.e., not necessarily be based on a Standard SOP Class);



Copyright National Electrical Manufacturers Association
Provided by IHS under license with NEMA
No reproduction or networking permitted without license from IHS
2000 Not for Resale 70247 0525104 80T

b) use or apply Media Storage Operations to privately defined or altered IODs (i.e., not necessarily be based on a Standard SOP Class);

b) designate any Standard Attribute as Type 1, 1C, 2, or 2C regardless of the Type of the Attribute in other IODs;

c) define Private Attributes as Type 1, 1C, 2, or 2C;

d) include Private and Standard Type 3 Attributes which may or may not be published in the Conformance Statement.

An implementation claiming conformance with a Private SOP Class shall provide a PS 3.3, PS 3.4, and PS 3.6-like description of the Private SOP Class in the implementation's Conformance Statement, including descriptions of the usage of all Standard and Private Type 1, 1C, 2, or 2C Attributes in the SOP Class, the DICOM Information Model, and the Privately Defined UIDs.

Note: Unpublished SOP Classes (i.e., SOP Classes that are not defined in the DICOM Standard and are not defined in the Conformance Statement) are permitted in order to allow an implementation to support other abstract syntaxes within the DICOM Application Context. Such unpublished SOP Classes would utilize Privately Defined UIDs. The presence of an unpublished SOP Class does not prevent the implementation from being DICOM conformant but would have no meaning to other implementations and may be ignored.

## 7.4 RULES GOVERNING TYPES OF APPLICATION PROFILES

Application Profile used in a Conformance Statement shall be of one of three basic types. Each Application Profile in an implementation claiming conformance to the DICOM Standard shall be handled in accordance with the following rules, as dictated by the type of Application Profile.

### 7.4.1 Standard Application Profile

A Standard Application Profile shall:

a) conform to all relevant Parts of DICOM with no changes;

b) support only one of the Physical Media and associated Media Format, as specified by PS 3.12.

To claim conformance to a Standard Application Profile, an implementation shall make a declaration of this fact in its Conformance Statement, and identify its selected options, roles, and behavior.

An implementation of a Standard Application Profile may extend Standard SOP Classes of this Standard application profile. Such Standard Extended SOP Classes shall meet the requirements specified in Section 7.3.

### 7.4.2 Augmented Application Profile

An Augmented Application Profile shall:

a) be a proper super set of the Standard Application Profile. It adds the support of additional Standard or Standard Extended SOP Classes;

b) use the same Physical Media and its associated Media Format specified in the corresponding Standard Application Profile;

c) not include Specialized or Private SOP Classes.

An Augmented Application Profile may:

Copyright National Electrical Manufacturers Association
Provided by IHS under license with NEMA
No reproduction or networking permitted without license from IHS
- Officia Standard -
Not for Resale

a) include one or more Standard or Standard Extended SOP Classes in addition to those of the corresponding Standard Application Profile. These additional SOP Classes may be mandatory or optional;

b) include the extensions (e.g. additional required keys, additional directory records) to the Basic Directory Information Object corresponding to the SOP Classes defined in a);

c) add one or more new roles (FSC, FSR, FSU).

To claim conformance to an Augmented Application Profile, an implementation shall make a declaration of this fact in its Conformance Statement, and shall identify the Standard Application Profile from which it is derived and specify the augmentations. The implementation shall also identify its selected options, roles, and behavior.

An implementation of a Augmented Application Profile may:

a) extend Standard SOP Classes of the corresponding Standard application profile. Such Standard Extended SOP Classes shall meet the requirements specified in Section 7.3;

b) also claim conformance to the Standard Application Profile on which this Augmented Profile is based. In this case, FSC and FSU implementations shall be able to restrict their behavior to the Standard Application Profile (i.e., provide a means to write only the Standard or Standard Extended SOP Classes defined in the corresponding Standard Application Profile).

### 7.4.3 Private Application Profile

A Private Application Profile:

- conforms to PS 3.10 and to the Media Storage Service Class specified in PS 3.4;
- support only one of the Physical Media and associated Media Format, as specified by PS 3.12;

Note: The intent of these two conditions is to ensure that at least the DICOMDIR is readable by other APs.

- complies with the rules governing SOP Classes in section 7.3.

To claim conformance to a Private Application Profile, an implementation shall make a declaration of this fact in its Conformance Statement, and shall provide a description of the Application Profile patterned after the descriptions in PS 3.11. The implementation shall also identify its selected options, roles, and behavior.

Note: An implementation that does not meet the provisions of Section 7, including the types of Application Profile, is not conformant to DICOM and so is outside the scope of DICOM conformance. Such an implementation is not an Application Profile in DICOM terminology. For example, if an implementation chooses to write DICOM files onto media that is not in PS 3.12, or use a file system not defined for a specific media type in PS 3.12, then that implementation cannot claim that it conforms to the DICOM Standard using that media or file system.

## 7.4 CONFORMANCE OF DICOM MEDIA

DICOM does not define conformance of a piece of medium in a generic sense. DICOM conformance of a piece of medium can only be evaluated within the scope of one or more media storage Application Profiles which define specific contexts for interoperability.

Note: One may accept the statement "this is a DICOM CD-R" when pointing to a storage medium. However, one should not state "this CD-R is DICOM conformant", but rather "this CD-R conforms to the Basic Cardiac X-ray Angiographic DICOM Application Profile".

Copyright National Electrical Manufacturers Association
Provided by IHS under license with NEMA
No reproduction or networking permitted without license from IHS
- Official Standard -
Not for Resale
STD•NEMA PS 3•2-ENGL 2000 6470247 0525106 6A2

## 7.5 SECURITY PROFILES

DICOM specifies methods for providing security at different levels of the ISO OSI Basic Reference Model through the use of mechanisms specific to a particular layer. The methods for applying these mechanisms are described in the various parts of the DICOM Standard. The mechanisms and algorithms used by those mechanisms are specified in PS 3.15 as Security Profiles. An implementation's Conformance Statement describes which Security Profiles can be used by that application.

Note: For example, the Basic TLS Secure Transport Connection Profile defines a mechanism for authenticating entities participating in the exchange of data, and for protecting the integrity and confidentiality of information during interchange.

An implementation shall list in its Conformance Statement any Security Profiles that it supports, how it selects which Security Profiles it uses, and how it uses features of that Security Profile.



Copyright National Electrical Manufacturers Association
Provided by IHS under license with NEMA
No reproduction or networking permitted without license from IHS
NGL 2000 Not for Resale 6470247 0525107 519

# Annex A (Normative) DICOM Conformance Statement Template

## A.0 INTRODUCTION

This Annex is a template which shall be used to generate a DICOM Conformance Statement. A DICOM Conformance Statement shall begin with an introduction which sets the framework. The introduction shall describe the implementation, and how, in general terms, it uses DICOM to achieve its purposes.

Note: The numbering scheme for numbering paragraphs in this document is to be used as a guideline in preparing the outline of the Conformance Statement. The Conformance Statement is not required to have exactly the same paragraph numbers. In fact, any particular Conformance Statement will have special considerations which will cause the outline to differ in certain details from the outline of this document.

## A.1 IMPLEMENTATION MODEL

After the introduction, the first section of the Conformance Statement is a description of the Implementation Model. The Implementation Model consists of an Application Data Flow Diagram, functional definitions of the Application Entities and their related Real-World Activities, and if applicable, a description of the sequencing of Real-World Activities.

### A.1.1 Application Data Flow Diagram

As part of the Implementation Model, an Application Data Flow Diagram shall be included. This diagram represents all of the Application Entities present in an implementation, and graphically depicts the relationship of the AE's use of DICOM to Real-World Activities. Figure A.1.1-1 is a template for such a Data Flow Diagram.

Accompanying the Application Data Flow Diagram shall be a discussion of the Application Data Flow represented. In this illustration, according to figure A.1.1-1, an occurrence of local Real-World Activity A will cause local Application Entity 1 to initiate an association for the purpose of causing Real-World Activity X to occur remotely. It also shows that Real-World Activities B and Y are interactively related via Application Entity 2, with B being local and Y Remote, and that local Application Entity 3 expects to receive an association request when remote Real-World Activity Z occurs so that it can perform Real-World Activity C and/or D. Figure A.1.1-1 also suggests a degree of overlap in some of the Real-World Activities. Any such overlap shall be discussed in this section of a Conformance Statement.



Copyright National Electrical Manufacturers Association
Provided by IHS under license with NEMA
No reproduction or networking permitted without license from IHS
PS 3.2-ENGL 2000 Not for Resale 6470247 0525108 455

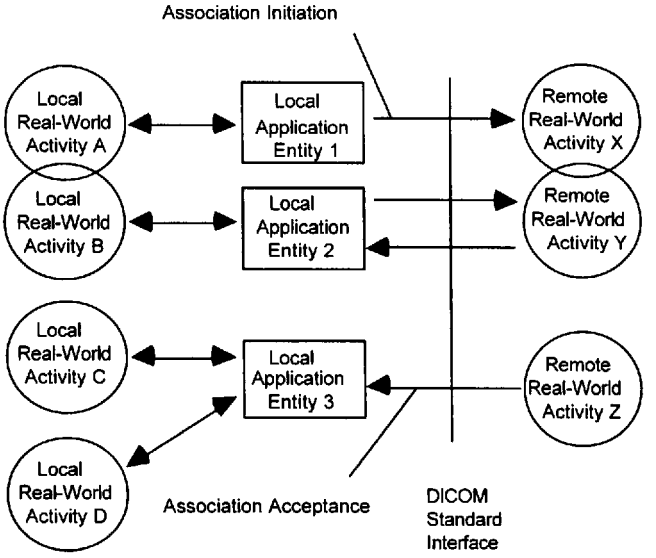


**Figure A.1.1-1. Implementation Model**

### A.1.2 Functional Definitions of AE's

The next part of the Implementation Model shall contain a functional definition for each local Application Entity. This shall describe in general terms the functions to be performed by the AE, and the DICOM services used to accomplish these functions. In this sense, "DICOM services" refers not only to DICOM Service Classes, but also to lower level DICOM services, such as Association Services.

### A.1.3 Sequencing of Real-World Activities

If applicable, this section shall contain a description of sequencing of Real-World Activities which the AE's require.

Note: A example of a situation in which such a description is required is an AE which supported both SOP's of the Storage Service Class, and SOP's of the Study Content Notification Service Class. Some implementations would require that the images be stored before the Study Content Notification is sent, some after, some might be insensitive to such sequencing.

## A.2 AE SPECIFICATIONS

The next section in the DICOM Conformance Statement is a set of Application Entity Specifications. There shall be one such specification for each Application Entity type.

### A.2.x AEx - Specification

Each individual AE Specification has a subsection, A.2.x. There are as many of these subsections as there are different AE's in the implementation. That is, if there are two distinct AE's, then there will be two subsections, A.2.1, and A.2.2.

The specification for an Application Entity shall contain a statement of the form:



Copyright National Electrical Manufacturers Association
Provided by IHS under license with NEMA
No reproduction or networking permitted without license from IHS
SL 2000 Not for Resale 70247 0525109 391

"This Application Entity provides Standard Conformance to the following DICOM V3.0 SOP Class(es) as an SCU: [include list of SOP Classes], and to the following DICOM V3.0 SOP Class(es)as an SCP: [include list of SOP Classes]."

#### A.2.x.1 Association Establishment Policies

Each AE Specification shall contain a description of the Association Establishment policies of the AE. This describes the conditions under which the AE will either initiate or accept an association.

#### A.2.x.1.1 General

This section describes any general rules governing the initiation of associations. It shall include the maximum PDU size which will be offered/accepted.

#### A.2.x.1.2 Number of Associations

The number of simultaneous associations which an Application Entity may support shall be specified. Any rules governing simultaneity of associations shall be defined here.

Note: For example an AE may have the capability to have up to 10 simultaneous associations, but may limit itself to have no more that 2 with any particular other AE. There may also be simultaneity policies based upon combinations of simultaneous Real-World Activities.

#### A.2.x.1.3 Asynchronous Nature

If the implementation supports negotiation of multiple outstanding transactions, this shall be stated here, along with the maximum number of outstanding transactions supported.

#### A.2.x.1.4 Implementation Identifying Information

The value supplied for Implementation Class UID shall be documented here. If a version name is supplied, this fact shall be documented here. Policies defining the values supplied for version name may be stated here.

#### A.2.x.2 Association Initiation by Real-World Activity

If an AE initiates Associations, the conditions under which it will initiate an Association shall be enumerated here. If the AE never initiates Associations, the section A.2.x.2 shall consist of a single sentence stating this fact, with no subsections. Otherwise, section A.2.x.2 shall contain a subsection A.2.x.2.i for each case of a Real-World Activity which will cause an association to be initiated.

#### A.2.x.2.i Real-World Activity i

#### A.2.x.2.i.1 Associated Real-World Activity

Subsection A.2.x.2.i.1 shall describe the part of the Real-World Activity which has caused the AE to initiate a DICOM association.

#### A.2.x.2.i.2 Proposed Presentation Contexts

Each time an association is initiated, the Association Initiator proposes a number of Presentation Contexts to be used on that association. In this subsection, the Presentation Contexts proposed by Application Entity <x> for Real-World Activity <i> shall be defined in a table with the following format:



Copyright National Electrical Manufacturers Association
Provided by IHS under license with NEMA
No reproduction or networking permitted without license from IHS
NEMA PS 3.2 2000 Not for Resale 1470247 0525110 003

**Table A.2.x.2.i.2-1**
**Proposed Presentation Contexts for Application Entity <x> and Real-World Activity <i>**

| Presentation Context Table | | | | | |
|---|---|---|---|---|---|
| **Abstract Syntax** | | **Transfer Syntax** | | **Role** | **Extended** |
| **Name** | **UID** | **Name List** | **UID List** | | **Negotiation** |
| name_a | AS_UID_a | XS_Name_1, ..., XS_Name_n | XS_UID_1, _, XS_UID_n | SCP \| SCU \| BOTH | None \| See Note \| See table A.2.x.2.i.2-j |
| ... | ... | ... | ... | ... | ... |

Note: Describes the content of any extended negotiation done for the SOP Classes of this Presentation Context. One note may serve multiple Presentation Contexts, as a single Abstract Syntax often corresponds to a single SOP class which may appear in different Presentation Contexts.

In figure A.2.x.2.i.2, the following meanings are assigned to the fields:

<name_a> This is the name of the Abstract Syntax to be used with this Presentation Context.

<AS_UID_a> This is the UID of the Abstract Syntax to be used for this Presentation Context.

<XS_Name_n> This is the name of a transfer syntax which may be used for this Presentation Context.

<XS_UID_n> The UID of the corresponding transfer syntax

In the event that the Abstract Syntax of the Presentation Context represents a Meta-SOP Class (that is, it includes many SOP Classes) and extended negotiation is supported for some of these SOP Classes, the following table is required to define this extended negotiation. This table is referenced in table A.2.x.2.i.2-1:

| SOP Class Name | SOP Class UID | Extended Negotiation |
|---|---|---|
| Name_i | SOP_UID_i | None \| See Note |
| ... | ... | ... |

Note: Describes the content of any extended negotiation done for this SOP Class. One note may serve multiple Presentation Contexts, as a SOP class which may appear in different Presentation Contexts and/or Meta SOP Classes.

### A.2.x.2.i.2.j SOP Specific Conformance Statement for SOP Class j

Here is where the SOP Specific Conformance for each particular SOP Class j (for real world event i, by AE x) is stated. This statement shall be as described in the SOP specific conformance statement section of PS 3.4 (or relevant private SOP definition). It shall include the content of any extended negotiation.

### A.2.x.3 Association Acceptance Policy

If an AE accepts Associations, the conditions under which it will accept an association shall be enumerated here. If the AE never accepts associations, the section A.2.x.2 shall consist of a single sentence stating this fact, with no subsections. Otherwise, section A.2.x.2 shall contain a subsection A.2.x.2.i for each case of a Real-World Activity under which an association will be accepted.

Copyright National Electrical Manufacturers Association
Provided by IHS under license with NEMA
No reproduction or networking permitted without license from IHS



Not for Resale

### A.2.x.3.i Real-World Activity i

The title of the section shall reflect the condition under which the association is accepted. This section shall contain a brief description of this condition.

### A.2.x.3.i.1 Associated Real-World Activity

The section shall include a description of the Real-World Activity which is associated with this association.

### A.2.x.3.i.2 Presentation Context table

**Table A.2.x.3.i.2-1**
**Acceptable Presentation Contexts for Application Entity <x> and Real-World Activity <i>**

| Presentation Context Table | | | | | |
|---|---|---|---|---|---|
| Abstract Syntax | | Transfer Syntax | | Role | Extended |
| Name | UID | Name | UID | | Negotiation |
| name_a | AS_UID_a | XS_Name_a | XS_UID_a | SCP \| SCU \| Both | None \| See Note \| See table A.2.x.3.i.2-j |
| ... | ... | ... | ... | ... | ... |

Note: Describes the content of any extended negotiation done for the SOP Classes of this Presentation Context. One note may serve multiple Presentation Contexts, as a single Abstract Syntax often corresponds to a single SOP class which may appear in different Presentation Contexts.

In figure A.2.x.3.i.2, the following meanings are assigned to the fields:

<name_a> This is the name of the Abstract Syntax to be used with this Presentation Context.

<AS_UID_a> This is the UID of the Abstract Syntax to be used for this Presentation Context.

<XS_Name_a> This is the name of a Transfer Syntax which may be used for this Presentation Context.

<XS_UID_a> The UID of the corresponding transfer syntax.

In the event that the Abstract Syntax of the Presentation Context represents a Meta-SOP Class (that is, it includes many SOP Classes) and extended negotiation is supported for some of these SOP Classes, the following table is required to define this extended negotiation. This table is referenced in table A.2.x.3.i.2-1:

| SOP Class name | SOP Class UID | Extended Negotiation |
|---|---|---|
| Name_i | SOP_UID_i | None \| See Note |
| ... | ... | ... |

Note: Describes the content of any extended negotiation done for this SOP Class. One note may serve multiple Presentation Contexts, as a SOP class which may appear in different Presentation Contexts and/or Meta SOP Classes.



Copyright National Electrical Manufacturers Association
Provided by IHS under license with NEMA
No reproduction or networking permitted without license from IHS GL 2000 Not for Resale 170247 0525112 986

#### A.2.x.3.i.2.j SOP Specific Conformance for SOP Class j

Here is SOP Specific Conformance for each particular SOP Class j (for real world event i, by AE x) is stated. This statement shall be as described in the SOP specific conformance section of PS 3.4 (or relevant private SOP definition). It shall include the content of any extended negotiation.

#### A.2.x.3.i.3 Presentation Context Acceptance Criterion

Any rules which govern the acceptance of presentation contexts for this AE shall be stated here. This includes rules for which combinations of Abstract/Transfer Syntaxes are acceptable, and rules for prioritization of presentation contexts.

#### A.2.x.3.i.4 Transfer Syntax Selection Policies

Rules which govern selection of transfer syntax within a presentation context shall be stated here.

### A.3 COMMUNICATION PROFILES

#### A.3.1 Supported Communication Stacks (Parts 8,9)

#### A.3.x OSI Stack

If the OSI communication stack is supported, then this section shall contain a description of the conformance to ISO profiles.

#### A.3.x.1 International Standardized Profile (ISP)

This sections states the ISP's which are supported.

Note: This concept of a "Profile" is defined by the ISO TR 10000 and called an ISO International Standardized Profile or ISP. This same concept is defined as a "Functional Standard" by CEN and the European Workshop on Open Systems (EWOS). In the USA, the National Institute for Standards and Technology (NIST) is hosting an OSI Implementors Workshop which defines such profiles as "Implementor Agreements". These profiles are used as the basis of Government Procurement Profiles (e.g. US or UK GOSIP) or Industry Procurement Profiles (e.g. MAP or TOP).

#### A.3.x.y API

If applicable, this section shall state the application programming interface to an OSI Stack which is used for this implementation. This is only applicable if the implementation is a software package intended to be integrated into different environments.

#### A.3.x.z Physical Media Support

If applicable, this section describes the physical media supported.

#### A.3.x TCP/IP Stack

#### A.3.x.y API

If applicable, this section shall state the application programming interface to a TCP/IP Stack (e.g. Berkeley Sockets, XLI, TLI) which is used for this implementation. This is only applicable if the implementation is a software package intended to be integrated into different environments.

#### A.3.x.z Physical Media Support

If applicable, this section describes the physical media supported by the TCP/IP Stack.

#### A.3.x Point-to-Point Stack

If the Point-to-Point interface is supported, this is stated here.

Copyright National Electrical Manufacturers Association
Provided by IHS under license with NEMA
No reproduction or networking permitted without license from IHS



Not for Resale

6470247 0525113 812

## A.4 EXTENSIONS/SPECIALIZATIONS/PRIVATIZATIONS

### A.4.1 Standard Extended/Specialized/Private SOPs

This section describes Standard Extended SOP Class, Specialized SOP Class, or Private SOP Class which are used. It shall follow the guidelines specified in PS 3.4.

### A.4.1.i Standard Extended/Specialized/Private SOP i

This section describes a particular Standard Extended SOP Class, Specialized SOP Class, or Private SOP Class. It shall follow the guidelines specified in PS 3.4.

### A.4.2 Private Transfer Syntaxes

This section describes any private Transfer Syntaxes which are listed in Table A.2.x.2.i.2 or A.2.x.3.i.2.

### A.4.2.i Private Transfer Syntax i

This section describes a particular private transfer syntax. It shall follow the guidelines specified in PS 3.5.

## A.5 CONFIGURATION

Any implementation's DICOM conformance may be dependent upon configuration which takes place at the time of installation. Issues concerning configuration shall be addressed in this section.

### A.5.1 AE Title/Presentation Address Mapping

One of the most important installation issues is the translation from AE title to Presentation Address. How this is to be performed shall be described in this section.

### A.5.2 Configurable Parameters

Another important issue is the specification of certain operational parameters, which may be based upon configuration information. These include the following.

- Number of simultaneous associations
- Maximum PDU size
- Time out

Any operational parameters which may influence conformance and are based upon configurations shall be described here.

## A.6 SUPPORT OF EXTENDED CHARACTER SETS

Any support for Extended Character Sets shall be described here.

Note: The previous DICOM standard did not specify a method of encoding multi-byte characters, such as Japanese characters. However, the present DICOM standard now allows Code Extension Techniques for multi-byte characters.

Therefore every DICOM implementation should take into account this enhancement. It is an implementation choice whether or not an Application Entity supports multi-byte characters. But, when an Application Entity which does not support Code Extension Techniques receives a Data Set which includes multi-byte characters from another Application Entity, misrepresentation of characters may occur.

It is the responsibility of the Application Entity which receives the Data Sets to take whatever action is considered necessary to minimize the effect of misrepresented characters. It is not the responsibility of the sending Application Entity to take such action.



Copyright National Electrical Manufacturers Association
Provided by IHS under license with NEMA 3-3-ENGL 2000 Not for Resale 70247 0525114 759
No reproduction or networking permitted without license from IHS

### A.7 CODES AND CONTROLLED TERMINOLOGY

Any support for Codes and Controlled Terminology, such as the use of the SNOMED DICOM Microglossary as a Mapping Resource, shall be described here. In particular, this section shall specify whether or not the Baseline Context Groups defined in DICOM PS 3.3 are used, or what alternative Context Groups or Coding Schemes, include private ones, are used and where their contents are defined.

### A.8 SECURITY PROFILES

Any support for Security profiles shall be described here.

- Official Standard -

Copyright National Electrical Manufacturers Association
Provided by IHS under license with NEMA
No reproduction or networking permitted without license from IHS
Not for Resale

# Annex B (Informative) DICOM Conformance Statement Sample

## B.0 INTRODUCTION

This Annex is a sample DICOM Conformance Statement for a fictitious DICOM Implementation. It is presented as an example only. The viability of such an implementation should not be assumed as the purpose of this Annex is only to guide the writer of DICOM Conformance Statements by providing a Conformance Statement example.

## B.1 IMPLEMENTATION MODEL

The application chosen for this example is simple transfer of images using the DICOM Storage Service Class. The application presented accomplishes movement of images using a simple, UNIX command line interface.

### B.1.1 Application Data Flow Diagram

DIS (for DICOM Image Store) and DAT (for DICOM Automated Transfer) are UNIX applications for the transfer of DICOM images. DIS is invoked by entering the "dis" command. The "dis" command is used to store an image (which must be contained in a local file) on a remote system. The format of the "dis" command is as follows:

dis [-v] [-d] [-p] <destination> <file_list>

The destination specifies the Application Entity title of the destination of the C-STORE operation. The <file_list> specifies the list of files to be sent. The "-v" option specifies that the file is to be checked for validity before being stored. The "-d" option specifies that the file is to be transferred in the format preferred by the destination (i.e. the set of presentation contexts will be structured to allow the destination to choose only its "preferred" transfer syntax). The "-p" option indicates that the file is to be purged after a successful transfer.

DAT is invoked by use of the "dat" command. The "dat" command has the following format:

dat [-v]

DAT is a daemon; it will detach itself from the terminal and run continuously until killed. The "-v" option specifies that the file formats are to be verified. See Figure B.1-1.

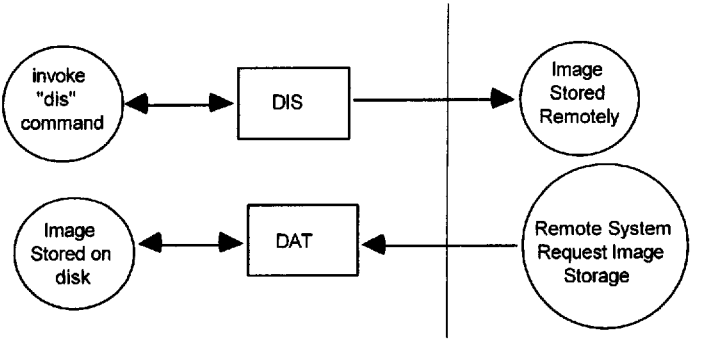


**Figure B.1-1. DIS and DAT Implementation Model**



Copyright National Electrical Manufacturers Association
Provided by IHS under license with NEMA
No reproduction or networking permitted without license from IHS
Not for Resale
15 3 3-ENGL 2000 6470247 0525116 521

### B.1.2 Functional Definitions of AE's

When DIS is invoked, it will go through all of the files in its file list. It expects these files to be in the file format specified by PS 3.10. For each file in the list, DIS determines the appropriate Presentation Contexts from the headers of these files and proposes an appropriate association for the transfer of this image to the destination. It writes a single line to standard out with the file name and completion status of the transfer of the file.

DAT waits for another application to connect at the presentation address configured for its Application Entity Title. When another application connects, DAT expects it to be a DICOM application. DAT will accept associations with Presentation Contexts for SOP Classes of the Storage Service Class. It will receive images on these Presentation Contexts and write them to files in the format specified in PS 3.10. It can be configured to invoke a UNIX command upon successful receipt of an image.

### B.1.3 Sequencing of Real-World Activities

Not Applicable.

### B.2 AE SPECIFICATIONS

Since DIS only initiates associations and DAT only accepts associations, the DIS application and the DAT daemon can be configured either to act as different Application Entities, or to act as a single Application Entity. In order to simplify this description, they are described as a single Application Entity. Since the operational parameters (including AE title) of DIS and DAT are each derived from configuration files in the /etc/dicom directory, although multiple instances of DIS may be running simultaneously, each represents the same Application Entity. DAT will spawn a new copy of itself for each new connection, each representing the same Application Entity.

### B.2.1 DIS and DAT - Specification

DIS and DAT provide Standard Conformance to the following DICOM V3.0 SOP Classes as both an SCU and an SCP:

| SOP Class Name | SOP Class UID |
|---|---|
| Computed Radiography Image Information Object | 1.2.840.10008.5.1.4.1.1.1 |
| CT Image Information Object | 1.2.840.10008.5.1.4.1.1.2 |
| MR Image Information Object | 1.2.840.10008.5.1.4.1.1.4 |
| Nuclear Medicine Image Information Object | 1.2.840.10008.5.1.4.1.1.5 |
| Ultrasound Image Information Object | 1.2.840.10008.5.1.4.1.1.6 |
| Secondary Capture Image Information Object | 1.2.840.10008.5.1.4.1.1.7 |

#### B.2.1.1 Association Establishment Policies

##### B.2.1.1.1 General

DIS will attempt to establish an association whenever it is invoked with valid parameters (including a known destination and valid DICOM format files). It will only attempt to establish associations if it determines that the file has a valid group 0002 header and that the Abstract Syntax and Transfer Syntax specified in the file header are valid. If the "-v" option is specified, then DIS will validate the contents of the file against the IOD for the SOP Class.

The maximum PDU size which DIS will use is configurable, with a minimum of 2K.

Copyright National Electrical Manufacturers Association
Provided by IHS under license with NEMA
No reproduction or networking permitted without license from IHS



Not for Resale

#### B.2.1.1.2 Number of Associations

DIS will attempt only one association establishment at a time. However, multiple copies of DIS may be invoked simultaneously. There is no synchronization attempted between multiple copies of DIS, so the DIS AE may attempt a number of simultaneous associations limited only by the resources of the computer systems upon which it is run, and by policies external to DIS which place limits on the number of times it may be invoked simultaneously.

The number of simultaneous associations which will be accepted by DAT are limited only by the kernel parameters of the underlying TCP/IP implementation. DAT will spawn a new process for each connection request it receives. Therefore, DAT can have multiple simultaneous connections, and there are no inherent limitations on the total number of simultaneous associations which the Application Entity represented by DIS and DAT can maintain.

#### B.2.1.1.3 Asynchronous Nature

DIS will only send a single image on an association. DAT will only allow a single outstanding operation on an Association. Therefore, neither DIS nor DAT will perform asynchronous operations window negotiation.

#### B.2.1.1.4 Implementation Identifying Information

Both DIS and DAT will provide a single Implementation Class UID which is "1.840.xxxxxxx.yyy.etc.ad.inf.usw". DIS will provide an implementation version name of "DIS v1.0" and DAT will provide an implementation version name of "DAT v1.0".

### B.2.1.2 Association Initiation Policy

DIS attempts to initiate a new association for each file it attempts to transfer. There are three cases of this Real-World Activity (image transfer) to consider:

1) the image is encoded with Implicit VR,

2) the image is encoded with Explicit VR and the "-d" option is specified,

3) the image is encoded with Explicit VR and the "-d" option is not specified.

#### B.2.1.2.1 Transfer of Image Encoded with Implicit VR

##### B.2.1.2.1.1 Associated Real-World Activity

The associated Real-World Activity is the attempt to transfer a file which is encoded with implicit VR. DIS is unable to translate the file into any other transfer syntax. Therefore it only offers a single Transfer Syntax for the transfer of the file.

##### B.2.1.2.1.2 Proposed Presentation Contexts

In this case, DIS will only propose a single Presentation Context, as shown in Table B.2 -1. This Presentation Context will use the SOP Class UID specified in the header of the file as the proposed Abstract Syntax, and the Transfer Syntax specified in the header of the file (which in this case is "DICOM Implicit VR") as the proposed Transfer Syntax.



Copyright National Electrical Manufacturers Association
Provided by IHS under license with NEMA
No reproduction or networking permitted without license from IHS NGL 2000 Not for Resale 6470247 0525118 3T4

**Table B.2-1**
**Proposed Presentation Contexts for DIS, file encoded with Implicit VR**

| Presentation Context Table | | | | | |
|---|---|---|---|---|---|
| Abstract Syntax | | Transfer Syntax | | Role | Extended |
| Name | UID | Name List | UID List | | Negotiation |
| See Note | See Note | DICOM Implicit VR Little Endian Transfer Syntax | 1.2.840.10008.1.2 | SCU | None |

Note: The Abstract Syntax Corresponds to the SOP Class UID specified in the header of the image file to be transferred.

#### B.2.1.2.2 Transfer of Image Encoded with Explicit VR and "-d" Specified

##### B.2.1.2.2.1 Associated Real-World Activity

The associated Real-World Activity is the request to transfer a file encoded with explicit VR, with the "-d" option specified. DIS is able to translate the file into any other native Transfer Syntax. Since the "-d" option is specified, then it will propose all of these Transfer Syntaxes in a single Presentation Context to allow the destination to choose the preferred Transfer Syntax.

##### B.2.1.2.2.2 Proposed Presentation Contexts

In this case, DIS will only propose a single Presentation Context, as shown in Table B.2-2. This Presentation Context will use the SOP Class UID specified in the header of the file as the proposed Abstract Syntax, and the list of all native Transfer Syntaxes specified in PS 3.5 as the proposed Transfer Syntaxes.

**Table B.2-2**
**Proposed Presentation Contexts for DIS, file encoded with Explicit VR, with "-d" Option Specified**

| Presentation Context Table | | | | | |
|---|---|---|---|---|---|
| Abstract Syntax | | Transfer Syntax | | Role | Extended |
| Name | UID | Name List | UID List | | Negotiation |
| See Note | See Note | DICOM Implicit VR Little Endian Transfer Syntax, | 1.2.840.10008.1.2 | SCU | None |
| | | DICOM Explicit VR Big Endian Transfer Syntax, | 1.2.840.10008.1.2.2 | | |
| | | DICOM Explicit VR Little Endian Transfer Syntax | 1.2.840.10008.1.2.1 | | |

Note: The Abstract Syntax Corresponds to the SOP Class UID specified in the header of the image file to be transferred.

#### B.2.1.2.3 Transfer of Image Encoded with Explicit VR and "-d" Not Specified

##### B.2.1.2.3.1 Associated Real-World Activity

The associated Real-World Activity is the request to transfer a file encoded with explicit VR, with the "-d" option not specified. DIS is able to translate the file into any other native Transfer Syntax. Since the "-d" option is not specified, then it will propose these Transfer Syntaxes in a three different Presentation Contexts. DIS expects the destination to accept all Presentation Contexts which it is capable of supporting. Thus, the choice of Transfer Syntax for the transfer of the image (if more than one is supported by both AE's) is left to DIS.

Copyright National Electrical Manufacturers Association
Provided by IHS under license with NEMA
No reproduction or networking permitted without license from IHS
- Official Standard -
Not for Resale

#### B.2.1.2.3.2 Proposed Presentation Contexts

In this case, DIS will only propose three Presentation Contexts, as shown in Table B.2-3. These Presentation Contexts will use the SOP Class UID specified in the header of the file as the proposed Abstract Syntax, and the list of all native Transfer Syntaxes specified in PS 3.5 as the proposed Transfer Syntaxes.

**Table B.2-3**
**Proposed Presentation Contexts for DIS, File Encoded with Explicit VR, with "-d" Option Not Specified**

| Presentation Context Table | | | | | |
|---|---|---|---|---|---|
| Abstract Syntax | | Transfer Syntax | | Role | Extended |
| Name | UID | Name List | UID List | | Negotiation |
| See Note | See Note | DICOM Implicit VR Little Endian Transfer Syntax | 1.2.840.10008.1.2 | SCU | None |
| See Note | See Note | DICOM Explicit VR Big Endian Transfer Syntax | 1.2.840.10008.1.2.2 | SCU | None |
| See Note | See Note | DICOM Explicit VR Little Endian Transfer Syntax | 1.2.840.10008.1.2.1 | SCU | None |

Note: The Abstract Syntax Corresponds to the SOP Class UID specified in the header of the image file to be transferred.

#### B.2.1.2.4 SOP Specific Conformance

If DIS is unable to determine the appropriate Abstract and Transfer Syntax for a file, or if the Abstract and Transfer Syntax are not supported by DIS, or if the "-v" option is specified and the image does not fulfill the requirements of the IOD for the SOP Class, DIS will print a single line of the following form to stdout:

<date><time> <file name> bad image format.

And then it continues with the next file. If DIS is unable to open an association for a particular file, it will print a single line of the following form to stdout:

<date><time> <file name> association to <destination> failed.

And then it continues with the next file.

When a successful response to a C-STORE operation is received, the file will be deleted if the "-p" option was specified. A single line of the following form is written to stdout:

<date> <time> <file name> stored on <destination> [and purged].

The "and purged" will be printed only if the "-p" option was specified and DIS was able to successfully delete the file. DIS will then continue with the next file.

When a failed, refused or warning response to a C-STORE operation is received, the file will not be deleted (even if the "-p" option was specified). A single line of the following form is written to stdout:

<date> <time> <file name> transfer to <destination> bad status <status code>.

DIS will then continue with the next file.

Copyright National Electrical Manufacturers Association
Provided by IHS under license with NEMA
No reproduction or networking permitted without license from IHS

Not for Resale

DIS will not attempt any extended negotiation.

DIS does not delete any elements from the files it transfers. Therefore the set of optional elements depends entirely on the contents of the files specified for transfer.

### B.2.1.3 Association Acceptance Policy

When DAT accepts an association, it will receive any images transmitted on that association and store the images on disk in the UNIX file system in the format specified by PS 3.10. DAT places no limitations on who may connect to it, nor on the number of simultaneous connects it will support.

#### B.2.1.3.1 Associated Real-World Activity

The associated Real-World Activity associated with the C-STORE operation is the storage of the image on the disk of the system upon which DAT is running. DAT will issue a failure status if it is unable to store the image on disk, or if the "-v" option was specified when DAT was invoked and the image transferred does not conform to the IOD of the SOP class under which it was transmitted.

DAT can also be configured to invoke a UNIX application (via an exec operation) for each image received. The full path name of the image file will be passed to the application as a command line parameter. If such an application is specified, DAT will not respond to the C-STORE-REQ until the application has completed. The status returned by the application will be used as the status of the C-STORE-RSP.

#### B.2.1.3.2 Presentation Context Table

Any of the Presentation Contexts shown in Table B.2-4 are acceptable for DAT to receive images.

**Table B.2-4**
**Acceptable Presentation Contexts for DAT**

| Presentation Context Table | | | | | |
|---|---|---|---|---|---|
| Abstract Syntax | | Transfer Syntax | | Role | Extended |
| Name | UID | Name | UID | | Negotiation |
| Verification | 1.2.840.10008.1.1 | DICOM Implicit VR Little Endian | 1.2.840.10008.1.2 | SCP | None |
| Computed Radiography Image | 1.2.840.10008.5.1.4.1.1.1 | DICOM Implicit VR Little Endian | 1.2.840.10008.1.2 | SCP | None |
| Computed Radiography Image | 1.2.840.10008.5.1.4.1.1.1 | DICOM Explicit VR Big Endian | 1.2.840.10008.1.2.2 | SCP | None |
| Computed Radiography Image | 1.2.840.10008.5.1.4.1.1.1 | DICOM Explicit VR Little Endian | 1.2.840.10008.1.2.1 | SCP | None |
| CT Image | 1.2.840.10008.5.1.4.1.1.2 | DICOM Implicit VR Little Endian | 1.2.840.10008.1.2 | SCP | None |
| CT Image | 1.2.840.10008.5.1.4.1.1.2 | DICOM Explicit VR Big Endian | 1.2.840.10008.1.2.2 | SCP | None |
| CT Image | 1.2.840.10008.5.1.4.1.1.2 | DICOM Explicit VR Little Endian | 1.2.840.10008.1.2.1 | SCP | None |
| MR Image | 1.2.840.10008.5.1.4.1.1.4 | DICOM Implicit VR Little Endian | 1.2.840.10008.1.2 | SCP | None |



Copyright National Electrical Manufacturers Association
Provided by IHS under license with NEMA
No reproduction or networking permitted without license from IHS
Not for Resale
-ENGL 2000 6470247 0525121 999

| | | | | | |
|---|---|---|---|---|---|
| MR Image | 1.2.840.10008.5.1.4.1.1.4 | DICOM Explicit VR Big Endian | 1.2.840.10008.1.2.2 | SCP | None |
| MR Image | 1.2.840.10008.5.1.4.1.1.4 | DICOM Explicit VR Little Endian | 1.2.840.10008.1.2.1 | SCP | None |
| Nuclear Medicine Image | 1.2.840.10008.5.1.4.1.1.5 | DICOM Implicit VR Little Endian | 1.2.840.10008.1.2 | SCP | None |
| Nuclear Medicine Image | 1.2.840.10008.5.1.4.1.1.5 | DICOM Explicit VR Big Endian | 1.2.840.10008.1.2.2 | SCP | None |
| Nuclear Medicine Image | 1.2.840.10008.5.1.4.1.1.5 | DICOM Explicit VR Little Endian | 1.2.840.10008.1.2.1 | SCP | None |
| Ultrasound Image | 1.2.840.10008.5.1.4.1.1.6 | DICOM Implicit VR Little Endian | 1.2.840.10008.1.2 | SCP | None |
| Ultrasound Image | 1.2.840.10008.5.1.4.1.1.6 | DICOM Explicit VR Big Endian | 1.2.840.10008.1.2.2 | SCP | None |
| Ultrasound | 1.2.840.10008.5.1.4.1.1.6 | DICOM Explicit VR Little Endian | 1.2.840.10008.1.2.1 | SCP | None |
| Secondary Capture Image | 1.2.840.10008.5.1.4.1.1.7 | DICOM Implicit VR Little Endian | 1.2.840.10008.1.2 | SCP | None |
| Secondary Capture Image | 1.2.840.10008.5.1.4.1.1.7 | DICOM Explicit VR Big Endian | 1.2.840.10008.1.2.2 | SCP | None |
| Secondary Capture Image | 1.2.840.10008.5.1.4.1.1.7 | DICOM Explicit VR Little Endian | 1.2.840.10008.1.2.1 | SCP | None |

#### B.2.1.3.3 SOP Specific Conformance

##### B.2.1.3.3.1 SOP Specific Conformance to Verification SOP Class

DAT provides standard conformance to the DICOM Verification Service Class.

##### B.2.1.3.3.2 SOP Specific Conformance to Storage SOP Classes

DAT conforms to the SOP's of the Storage Service Class at Level 2 (Full). No elements are discarded or coerced by DAT. In the event of a successful C-STORE operation, the Image has successfully been written to disk as a standard UNIX file. As such, it may be accessed in the same manner as any other UNIX file. DAT will never delete a file which it has received; the duration of the storage of the image is determined by other users of the UNIX system.

Unless the "-v" option is specified, a successful C-STORE response does not mean that DAT has stored a valid DICOM Composite Information Object. Unless the "-v" option is enabled, DAT does not perform any validation of the data beyond the DICOM Command. DAT is a "trusting" application.

This behavior can be extended by configuration. DAT can be configured to invoke a UNIX application for each file received. This application can provide additional semantics to a successful C-STORE operation. Any such semantics are beyond the scope of this Conformance Statement, but should be documented in



Copyright National Electrical Manufacturers Association
Provided by IHS under license with NEMA
No reproduction or networking permitted without license from IHS
Not for Resale

the Conformance Statement of any system in which DAT is used as a building block. DAT will not invoke such an application unless the file has been successfully stored. Any such application is expected to return a DICOM status code. DAT provides no validation of any return codes, but will return this status to the SCU.

**Caution should be exercised when extending the semantics of the C-STORE, to insure that a valid DICOM status is returned, as configuration of an improper application could render DAT non-conformant to DICOM.**

If DAT returns one of the following status codes, then the C-STORE was unsuccessful:

- A700 (Out of Resources) - Indicates that there was not enough disk space to store the image. Recovery from this condition is left to the user of DAT.

- A800 (SOP Class Not Supported) - Indicates that the SOP Class of the Image in the C-STORE operation did not match the Abstract Syntax negotiated for the Presentation Context. This indicates a problem with the SCU of the Service Class.

- A900 (Data Set does not match SOP Class) - Indicates that the Data Set does not encode a instance of the SOP Class specified. This indicates a problem with SCU of the Service Class. This status will only be returned by DAT if the "-v" option is enabled.

- C000 (Cannot understand) - Indicates that the Data Set cannot be parsed into elements by DAT. This indicates a problem with the SCU. This status will only be returned by DAT if the "-v" option is enabled.

If the "-v" option is enabled, then DAT will recognize a "warning" condition in certain cases in which the Data Set does not match the IOD of the SOP Class. In this case, the Image is stored to Disk as if the C-STORE was successful. If no UNIX application is configured to be invoked, then DAT will return the following Status:

- B007 (Data Set does not match SOP Class)

If a UNIX application to invoke is configured, the warning status will be passed to it as a command line parameter. The status returned to the SCU depends upon the status returned by the application.

#### B.2.1.3.4 Presentation Context Acceptance Criterion

DAT will always accept a Presentation Context for the Verification SOP Class with the DICOM Default Transfer Syntax. In addition to this, DAT will accept up to three Presentation Contexts on an association, provided that all of these Presentation Contexts specify the same Abstract Syntax. The acceptable Presentation Contexts which DAT may accept are specified in table B.2-4. DAT will examine proposed Presentation Contexts in the order proposed. The first acceptable Presentation Context (other than Verification) determines the Abstract Syntax which will be used for the association. Later Proposed Presentation Contexts may be accepted if they have the same Abstract Syntax and allow a different Transfer Syntax.

#### B.2.1.3.5 Transfer Syntax Selection Policies

DAT prefers to receive images encoded using an explicit transfer syntax. It may be configured to prefer either explicit big endian or explicit little endian. If offered a choice of Transfer Syntaxes in a Presentation Context, it will apply the following priority to the choice of Transfer Syntax:

a) configured explicit Transfer Syntax,
b) other explicit Transfer Syntax,



Copyright National Electrical Manufacturers Association
Provided by IHS under license with NEMA
No reproduction or networking permitted without license from IHS IGL 2000 Not for Resale 470247 0525123 761

c) default Transfer Syntax.

DAT will not accept duplicate Presentation Contexts, that is, if it is offered three identical Presentation Contexts, each of which offers any of the three acceptable Transfer Syntaxes, it will accept all Presentation Contexts, but with different Transfer Syntaxes in each.

### B.3 COMMUNICATION PROFILES

#### B.3.1 Supported Communications Stacks (parts 8,9)

Both DIS and DAT provide DICOM V3.0 TCP/IP Network Communication Support as defined in PS 3.8.

#### B.3.2 TCP/IP Stack

DIS and DAT inherit their TCP/IP stack from the UNIX system upon which they execute. DIS and DAT have been implemented on a number of different UNIX systems.

#### B.3.2.1 Physical Media Support

DIS and DAT are indifferent to the physical medium over which TCP/IP executes; they inherit this from the UNIX system upon which they execute.

### B.4 EXTENSIONS/SPECIALIZATIONS/PRIVATIZATIONS

Not Applicable.

### B.5 CONFIGURATION

DIS and DAT obtain their configuration information from three files in the directory /etc/dicom:

- entities - provides mapping from Application Entity Title to Presentation Address,
- disconfig - provides configuration information for DIS, and
- datconfig - provides configuration information for DAT.

#### B.5.1 AE Title/Presentation Address Mapping

Each line in the file provides a mapping of an Application Entity Title to a Presentation Address. A Presentation Address consists of a host name and port number. Each line has the following format:

<AE title> <host name> <port number>

The /etc/dicom/entities file is used by DIS to establish associations to remote Application Entities. It is used by DAT to determine the socket number upon which it will wait for connections.

#### B.5.2 Configurable Parameters

#### B.5.2.1 disconfig

The file /etc/dicom/disconfig specifies the configuration parameters for DIS. The following parameters may be configured for DIS:

- Application Entity Title
- PDU size

Each configuration item is configured with a single line in the configuration file. The format for the Application Entity Title configuration line is:

AE <application title>



Copyright National Electrical Manufacturers Association
Provided by IHS under license with NEMA
No reproduction or networking permitted without license from IHS
3.2-ENGL 2000 Not for Resale 4470247 0525124 6T8

Where "AE" is a keyword, and <application title> is an Application Entity Title which must occur in the /etc/dicom/entities file. Only one such line may appear in disconfig.

The format for the PDU size configuration line is:

PDU <size>

Where "PDU" is a keyword, and <size> is the maximum number of bytes DIS can accept in a PDU. Only one such line may appear in disconfig.

#### B.5.2.2 datconfig

The file /etc/dicom/datconfig specifies the configuration parameters for DAT. The following parameters may be configured for DAT:

- Application Entity Title
- PDU size
- Preferred byte order
- Directory for Storage of images
- UNIX Application to be invoked for images

The format of the Application Entity Title and PDU size configuration lines are the same as for the disconfig file.

The format of the preferred byte order configuration line is :

BO <BIG | LITTLE>

Where "BO", "BIG", and "LITTLE" are keywords.

The format for the Directory for Storage of images configuration line is:

STORE <SOP Class UID> <directory path>

Where "STORE" is a keyword. This specifies a directory in which all images of the specified SOP Class should be stored. One such configuration line is required for each SOP Class.

The format for the Directory for Storage of images configuration line is:

INVOKE <SOP Class UID> <UNIX command>

Where "INVOKE" is a keyword. This specifies a UNIX command to be invoked when an image of the specified SOP Class is received. One such configuration line may be supplied for each SOP Class. This configuration item is optional.

### B.6 SUPPORT OF EXTENDED CHARACTER SETS

Both DIS and DAT are indifferent to Extended Character Sets, as neither application relies on the information contained within the Data Elements.

### B.7 CODES AND CONTROLLED TERMINOLOGY

This implementation makes use of the Baseline Context Groups as specified in the IODs for the SOP Classes supported, and uses the SNOMED DICOM Microglossary Version XXX as a Mapping Resource.

Copyright National Electrical Manufacturers Association
Provided by IHS under license with NEMA
No reproduction or networking permitted without license from IHS



-ENGL 200 Not for Resale 6470247 0525125 534

No Private Mapping Resources or Coding Schemes are used.

The SCU implementation selects codes from a Pick List presented to the operator.

The SCP implementation annotates the display with meanings derived from the specified Coding Schemes, *or uses the specified Code Meaning if not found.*.



Copyright National Electrical Manufacturers Association
Provided by IHS under license with NEMA
No reproduction or networking permitted without license from IHS
Not for Resale

PX 3.2-ENGL 2000 6470247 0525126 470

# Annex C (Normative) DICOM Conformance Statement Template for Media Storage Application Profiles

## C.0 INTRODUCTION

This Annex is a template which shall be used to generate a DICOM Conformance Statement. A DICOM Conformance Statement shall begin with an introduction which sets the framework. The introduction shall describe the implementation, and how, in general terms, it uses DICOM to achieve its purposes.

Note: The numbering scheme for numbering paragraphs in this document is to be used as a guideline in preparing the outline of the Conformance Statement. The Conformance Statement is not required to have exactly the same paragraph numbers. In fact, any particular Conformance Statement will have special considerations which will cause the outline to differ in certain details from the outline of this document.

## C.1 IMPLEMENTATION MODEL

After the introduction, the first section of the Conformance Statement is a description of the Implementation Model. The Implementation Model shall identify the DICOM Application Entities in a specific implementation, and relate the Application Entities to Real-World Activities.

### C.1.1 Application Data Flow Diagram

As part of the Implementation Model, an Application Data Flow Diagram shall be included. This diagram represents all of the Application Entities present in an implementation, and graphically depicts the relationship of the AE's use of DICOM to real world activities. Figure C.1-1 is a template for such a Data Flow Diagram. Accompanying the Application Data Flow Diagram shall be a discussion of the Application Data Flow represented.

In this illustration, according to figure C.1-1, an occurrence of local Real-World Activity A or B will cause the local Application Entity 1 to initiate either creation of a File-set on a medium (FSC) for the purpose of interchange with a remote Real-World Activity X or to access a File-set on a medium for reading (FSR). The remote Real-World Activity X accesses the medium physically transferred from Real-World Activity A or B.

An occurrence of Real-World Activity C will cause the local Application Entity 2 to update a File-set (FSU) on a mounted medium.

Copyright National Electrical Manufacturers Association
Provided by IHS under license with NEMA
No reproduction or networking permitted without license from IHS
- Offic al Standard -
Not for Resale

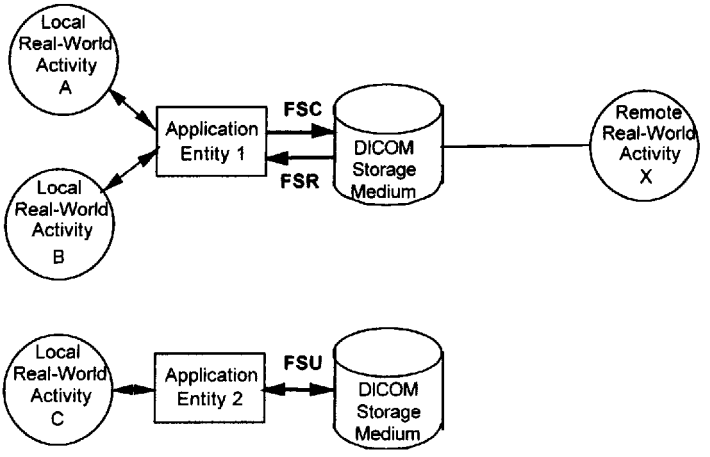


**Figure C.1-1.**
**Application Data Flow Diagram**

Note: If the AE expects a remote Real-World Activity to access the media for a specific purpose, this should be shown in the Application Data Flow Diagram as well as described in Section C.1.1.

### C.1.2 Functional definitions of AE's

The next part of the Conformance Statement shall contain a functional definition for each local Application Entity. This shall describe in general terms the functions to be performed by the AE, and the DICOM services used to accomplish these functions. In this sense, "DICOM services" refers not only to DICOM Service Classes, but also to lower level DICOM services, such as the Media File System and mapping to particular Media Formats.

### C.1.3 Sequencing of Real World Activities

If applicable, this section shall contain a description of sequencing of Real World Activities which the AE's require.

Note: A example of a situation in which a such a description is required is an AE which supports roles as a File-set Updater and File-set Reader. In some instances, the File-set will be updated then read (e.g., for verification), and in other instances, may be read first to determine if the File-set needs to be updated.

### C.1.4 FILE META INFORMATION FOR IMPLEMENTATION CLASS AND VERSION

This section shall be used to list the values assigned to the File Meta Information attributes (see PS 3.10) that pertain to the Implementation Class and Version. These are:

- File Meta Information Version
- Implementation Class UID
- Implementation Version Name

Copyright National Electrical Manufacturers Association
Provided by IHS under license with NEMA
No reproduction or networking permitted without license from IHS



Not for Resale

## C.2 AE SPECIFICATIONS

The next section in the DICOM Conformance Statement is a set of Application Entity Specifications. There shall be one such specification for each Application Entity type.

### C.2.x AEx - Specification

Each individual AE Specification has a subsection, C.2.x. There are as many of these subsections as there are different AE's in the implementation. That is, if there are two distinct AE's, then there will be two subsections, C.2.1, and C.2.2.

The following table, Table C.2.x-1, shows that for one or more APs in the first column, there are a number of Real-World Activities in the second column, the roles required for each of these Real-World Activities in the third column, and the Service Class Option (Interchange or Print) is listed in the fourth column.

**Table C.2.x-1**
**AE Related Application Profiles, Real-World Activities, and Roles**

| Supported APs | Real-World Activity | Roles | SC Option |
|---|---|---|---|
| STD-AP1 | RWA A | FSR | Interchange |
| | RWA B | FSR, FSC | Interchange |
| STD-AP1, AUG-AP2, etc. | RWA C | FSU | Print |
| | RWA D | FSC | Interchange |

This section shall also contain any general policies that apply to all of the AEs described in subsequent section.

### C.2.x.1 File Meta Information for the Application Entity x

This section shall contain the values of the File Meta Information that pertain to the Application Entity (see PS 3.10). These are:

- Source Application Entity Title

If Private Information is used in the Application Profile File Meta Information, the following two File Meta Information attributes may be documented:

- Private Information Creator UID
- Private Information

### C.2.x.2 Real-World Activities

The first sentence in this section shall state the Roles and Media Storage Service Class Options supported by the AEx.

### C.2.x.2.i Real-World Activity i

The AE Specification shall contain a description of the Real-World Activities which invoke the particular AE. There will be one section, C.2.x.2.i where i increments for each RWA, per Real-World Activity.

### C.2.x.2.i.1 Media Storage Application Profile

The Application Profile that is used by the AE described in C.2.x is specified in this section.

Copyright National Electrical Manufacturers Association
Provided by IHS under license with NEMA
No reproduction or networking permitted without license from IHS



NGL 2000 Not for Resale 1470247 0525129 18T

#### C.2.x.2.l.1.y Options

The options used in the Application Profile specified in C.2.x.1.i.1 shall be detailed in this section. There will be separate sections for each option specified for the AP. If there are no options used in the AP specified in C.2.x, this section may be omitted.

### C.3 AUGMENTED AND PRIVATE APPLICATION PROFILES

This Section shall be used for the description of Augmented and Private Application Profiles.

#### C.3.1 Augmented Application Profiles

Any Augmented Application Profiles used by an AE shall be described in these sections. The rules governing the structure of an Augmented AP are described in Section 7.4.2.

#### C.3.1.x Augmented Application Profile x

Each Augmented Application Profile shall have a section C3.1.x that describes the specific features of the Application Profile that make it Augmented. These shall be described in the three repeating sections that follow.

#### C.3.1.x.1 SOP Class Augmentations

The additional SOP Classes beyond those specified in the Standard AP on which this Augmented AP is based shall be detailed in this section.

#### C.3.1.x.2 Directory Augmentations

Any additions to the Directory IOD that augment this AP shall be described in this section.

#### C.3.1.x.3 Other Augmentations

Any additions to, or extensions of the Application Profile shall be described in this section. An example of such an other augmentation is addition of a role (FSR, FSC, FSU) to the Standard Application Profile set of defined roles.

#### C.3.2 Private Application Profiles

The rules that govern construction of a Private Application Profile are described in Section 7.4.3. This section shall be used to describe the details of the Private AP.

Notes: 1. Refer to PS 3.11 for a description of constructing a Private Application Profile.

2. If the AP deviates from the rules governing a Private AP in Section 7.4.3 in any manner, it is non-conformant and is outside the scope of this Standard.

### C.4 EXTENSIONS, SPECIALIZATIONS, AND PRIVATIZATIONS OF SOP CLASSES AND TRANSFER SYNTAXES.

This section shall be used to describe the Standard Extended, Specialized, or Privatized SOP Classes and any Private Transfer Syntaxes used by an Application Profile

#### C.4.1 Extensions, Specializations, and Privatizations of SOP Classes

This Section shall be used for the description of any extensions, specializations, or privatizations of any of the SOP Classes used in an Application Profile.

#### C.4.1.x SOP Specific Conformance Statement for SOP Class x

For each SOP Class x specified by the Application Profile, this section shall be used to provide details of any extension, specialization, or privatization that changes the SOP Class from its Standard specification.

Note: This section has a parallel in the DICOM Network Conformance Template



Copyright National Electrical Manufacturers Association
Provided by IHS under license with NEMA
No reproduction or networking permitted without license from IHS
3-2-ENGL 2000 6470247 0525130 9T1
Not for Resale

### C.4.2 Private Transfer Syntax Specification

Any Private Transfer Syntaxes are described in this section.

Note: This section has a parallel in the DICOM Network Conformance Template

## C.5 CONFIGURATION

Any implementation's DICOM conformance may be dependent upon configuration which takes place at the time of installation. Issues concerning configuration shall be addressed in this section (e.g. the configuration of the Source AE Title in File Meta Information).

## C.6 SUPPORT OF EXTENDED CHARACTER SETS

Any support for Extended Character Sets shall be described here.

Note: The previous DICOM standard did not specify a method of encoding multi-byte characters, such as Japanese characters. However, the present DICOM standard now allows Code Extension Techniques for multi-byte characters.

Therefore every DICOM implementation should take into account this enhancement. It is an implementation choice whether or not an Application Entity supports multi-byte characters. But, when an Application Entity which does not support Code Extension Techniques receives a Data Set which includes multi-byte characters from another Application Entity, misrepresentation of characters may occur.

It is the responsibility of the Application Entity which receives the Data Sets to take whatever action is considered necessary to minimize the effect of misrepresented characters. It is not the responsibility of the sending Application Entity to take such action.

## C.7 CODES AND CONTROLLED TERMINOLOGY

Any support for Codes and Controlled Terminology, such as the use of the SNOMED DICOM Microglossary as a Mapping Resource, shall be described here. In particular, this section shall specify whether or not the Baseline Context Groups defined in DICOM PS 3.3 are used, or what alternative Context Groups or Coding Schemes, include private ones, are used and where their contents are defined.

## C.8 SECURITY PROFILES

Any support for Security profiles shall be described here.

Copyright National Electrical Manufacturers Association
Provided by IHS under license with NEMA
No reproduction or networking permitted without license from IHS



NEMA PS 3.2 2000 Not for Resale 1470247 0525131 838

# Annex D: (Informative) Example of a DICOM Conformance Statement for a DICOM Media Storage Implementation

## D.0 INTRODUCTION

This Annex is a sample DICOM Conformance Statement for a fictitious DICOM Media Storage Implementation. It is presented as an example only. The viability of such an implementation should not be assumed as the purpose of this Annex is only to guide the writer of DICOM Conformance Statements by providing a Conformance Statement example.

## D.1 IMPLEMENTATION MODEL: MOD UPDATE DEVICE

The MOD Update Device creates and/or updates 5 1/4 inch MOD media with various DICOM SOP instances. It can process Ultrasound, CT, MR, and selected other IODs.

### D.1.1 Application Data Flow Diagram: MOD Update Device Real-World relationship

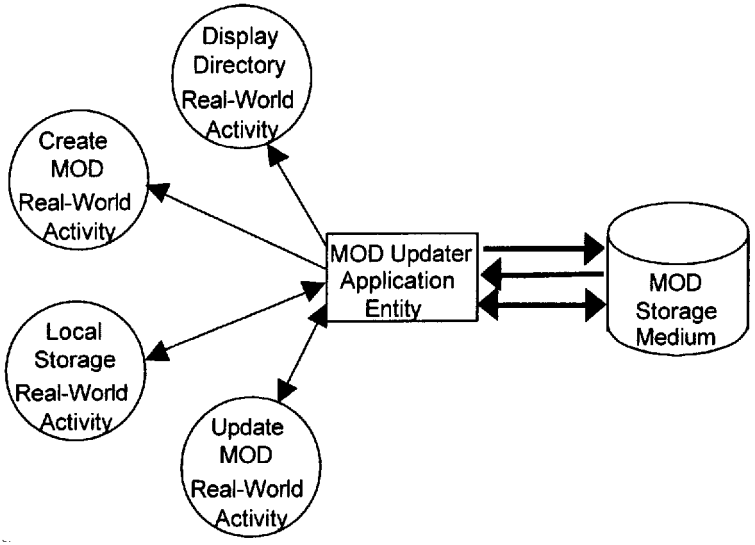


The MOD Update device has a local storage that may contain various SOP instances. These may have been obtained by network or by removable media using other application entities. These instances are external to this conformance claim and the origin of the SOP instances is outside the scope of this claim.

The MOD Update Application can initialize Media by acting as an FSC to create a new DICOM File-set on either 630MB MOD or 1.2GB MOD media. It initializes the DICOM File-set and writes the specified SOP instances onto the MOD. The SOP instances written will be limited to instances that match the criteria of one of the Application Profiles that is supported. When updating media, a pre-existing File-set will be updated with the selected SOP instances that match one of the supported Application Profiles.



Copyright National Electrical Manufacturers Association
Provided by IHS under license with NEMA
No reproduction or networking permitted without license from IHS
Not for Resale

### D.1.2 Functional Definition of Application Entities

This device has only one Application Entity: the MOD Update Application.

The MOD Update Application can perform these functions:

- it can initialize a piece of media, writing a new DICOM File-set onto the media;
- it can update a piece of media by adding new SOP instances to an already existing DICOM File-set;
- it can display a directory listing of the File-set on a piece of media;
- it can copy SOP instances from the MOD onto local storage.

### D.1.3 Sequencing Requirements

The updating function can only be performed on a piece of media that has already had a DICOM File-set created. There are no other sequencing requirements.

### D.1.4 File Meta Information Options (see PS 3.10)

Implementation Class UID = "a.bbb.cccccc.ddd.eee.fff.ggg"

Implementation Version Name = "DICOM_Media_UPDT"

Note: The Implementation Class UID is part of the File Meta Information written into every file and therefore necessary for any device that acts as an FSC or FSU. One could in theory have a device that is purely an FSR without setting an Implementation Class UID.

## D.2 AE SPECIFICATIONS

### D.2.1 MOD Update Specification

The MOD Update provides standard conformance to DICOM Interchange Option of the Media Storage Service Class. The Application Profiles and roles are listed in Table D.2-1

**Table D.2-1 Application Profiles, Activities, and Roles for MOD Update**

| Application Profiles Supported | Real World Activity | Role | SC Option |
|---|---|---|---|
| STD-US-ID-SF-MOD650,<br>STD-US-ID-SF-MOD12,<br>STD-US-ID-MF-MOD650,<br>STD-US-ID-MF-MOD12,<br>AUG-MODUP-MOD650,<br>AUG-MODUP-MOD12 | Create MOD | FSC | Interchange |
| | Update MOD | FSU | Interchange |
| | Display Directory | FSR | Interchange |
| | Copy to Local Storage | FSR | Interchange |

Note: For MOD Update, the Service Class Option (SC Option) in Table D.2-1 is Interchange. Had the Print option been supported for any of the Application Profiles, this would have been shown in the SC Option column.

The MOD Update Application will query the user before initializing media when a File-set is found on media and an initialize operation has been requested.



Copyright National Electrical Manufacturers Association
Provided by IHS under license with NEMA
No reproduction or networking permitted without license from IHS IGL 2000 Not for Resale 470247 0525133 600

#### D.2.1.1 File Meta Information for the Application Entity

The Source Application Entity Title is set by the user in the configuration file.

#### D.2.1.2 Real-World Activities for this Application Entity

##### D.2.1.2.1 Real-World Activity: Create MOD Request

The MOD Update Application acts as an FSC using the Interchange option when requested to initialize media.

The MOD Update Application will take the user provided list of SOP instances (which may be empty), and eliminate any SOP Instance on that list that does not correspond to one of the Application Profiles in Table D.2-1. These SOP Instances are written to the media and a corresponding DICOMDIR is created. The determination of the potentially applicable Application Profile is dependent on the type of media. This is determined by the drive and associated software on which the AE has been invoked.

If the selection list is empty, the FSC action results in the creation of an empty File-set.

Note: The empty File-set is compatable with any Standard Application Profile and does not require a special profile definition.

###### D.2.1.2.1.1 Application Profiles for the RWA: Create MOD

For the list of Application Profiles that invoke this AE for the Create MOD RWA, see Table D.2-1. There are no extensions or specializations.

##### D.2.1.2.2 Real-World Activity: Display Directory

The MOD Update Application acts as an FSR using the Interchange option when requested to provide a directory listing.

When the MOD Update Application is requested to provide a directory listing it will read the File-set and display the DICOMDIR directory entries for those SOP Instances in the File-set that correspond to the user selected Application Profile. If no profile has been selected, the application will display Directory Records corresponding to either the AUG-MODUP-MOD650 or the AUG-MODUP-MOD12 AP, depending upon the type of media that has been inserted.

###### D.2.1.2.2.1 Application Profiles for the RWA: MOD Directory Listing

For the list of Application Profiles that invoke this AE for the Create MOD RWA, see Table D.2-1. There are no extensions or specializations.

##### D.2.1.2.3 Real-World Activity: Copy to Local Storage

The MOD Update Application acts as an FSR when copying from the MOD to local storage.

The MOD Update Application will copy any SOP Instance selected from an MOD Directory list from the MOD to the local storage upon command. The MOD Directory listing Real-World Application will filter out the SOP Instances that do not match the Application Profile.

###### D.2.1.2.3.1 Application Profiles for the RWA: Copy to Local Storage

For the list of Application Profiles that invoke this AE for the Create MOD RWA, see Table D.2-1. There are no extensions or specializations.

##### D.2.1.2.4 Real-World Activity: Update MOD

The MOD Update Application acts as an FSU using the Interchange option when requested to update an MOD.



Copyright National Electrical Manufacturers Association
Provided by IHS under license with NEMA
No reproduction or networking permitted without license from IHS
Not for Resale

3 2-ENCL 2000 ■■ L470247 0525134 547 ■■

The MOD Update Application will take the selected list of SOP instances (which may be empty), and eliminate any SOP instance that does not correspond of a permissible SOP instance listed in one of the Applications Profiles in Table D.2-1. The remaining SOP Instances are then written to the media that is found in the MOD Update Application disk drive. The determination of the potentially applicable Application Profile is dependent on the type of media. This is determined by the drive and associated software on which the AE has been invoked.

The MOD must have a pre-existing File-set present or an error will be reported.

Note: The MOD Update Device cannot place constraints on the contents of the pre-existing File-set. It need not correspond to any known Application Profile. This is a result of the rules defining Standard, Augmented, and Private Application Profiles. An FSU must be able to update any proper DICOM File-set.

#### D.2.1.2.4.1 Application Profiles for the RWA: Update Media Request

For the list of Application Profiles that invoke this AE for the Create MOD RWA, see Table D.2-1. There are no extensions or specializations.

### D.3 AUGMENTED AND PRIVATE PROFILES

### D.3.1 Augmented Profiles

The MOD Update Device supports two augmented Application Profiles: AUG-MODUP-MOD650 and AUG-MODUP-MOD12.

Note The only difference between these two profiles is the choice of type of media. This nonetheless requires the definition of two augmented profiles. Notice also that the augmentation does not specify media or media format. The PS 3.11 Annex that describes the Standard Application Profile specifies the selection of a single PS 3.12 Annex for media and media format. An augmentation is not allowed to change this.

#### D.3.1.1 AUG-MODUP-MOD650

This Application Profile is an augmentation of the STD-US-ID-MF-MOD650 Standard Application profile defined in PS 3.11. The augmentations add support for CR, CT, MR, and SC SOP Classes.

#### D.3.1.1.1 SOP Class Augmentations

The following IODs are part of the AUG-MODUP-MOD650. There are no requirements or restrictions on SOP options for these IODs beyond those in their standard definitions.

**Table D.3-1 - IODs and Transfer Syntaxes for AUG-MODUP-MOD650**

| Information Object Definition | SOP Class UID | Transfer Syntax | Transfer Syntax UID |
|---|---|---|---|
| Computed Radiography Image Storage | 1.2.840.10008.5.1.4.1.1.1 | Explicit VR Little Endian Uncompressed | 1.2.840.10008.1.2.1 |
| CT Image Storage | 1.2.840.10008.5.1.4.1.1.2 | Explicit VR Little Endian Uncompressed | 1.2.840.10008.1.2.1 |
| MR Image Storage | 1.2.840.10008.5.1.4.1.1.4 | Explicit VR Little Endian Uncompressed | 1.2.840.10008.1.2.1 |
| Secondary Capture Image Storage | 1.2.840.10008.5.1.4.1.1.7 | Explicit VR Little Endian Uncompressed | 1.2.840.10008.1.2.1 |



Copyright National Electrical Manufacturers Association
Provided by IHS under license with NEMA
No reproduction or networking permitted without license from IHS
Not for Resale
NEMA PS 3.2 2000 1470247 0525135 483

This Application Profile does not place any further restrictions on options or extensions for any of these SOP classes. Any otherwise permissible SOP instance is acceptable for the AUG-MODUP-MOD650 profile.

Note: There are no columns or sections of constraints or removal of features because an augmentation must accept anything acceptable as part of the underlying Standard Application Profile. Only additions are allowed.

#### D.3.1.1.2 Directory Augmentations

There are no additional directory keys, records, or options as part of this profile. None are required to be written using either FSU or FSC.

#### D.3.1.1.3 Other Augmentations

None

### D.3.1.2 AUG-MODUP-MOD12 Application Profile

This application profile is an augmentation of the STD-US-ID-MF-MOD12 Standard Application profile defined in PS 3.11. The augmentations add support for CT, MR, and other objects.

#### D.3.1.2.1 SOP Class Augmentations

The following IODs are part of the AUG-MODUP-MOD12. There are no requirements or restrictions on SOP options for these IODs beyond those in their standard definitions.

**Table D.3-2 - IODs and Transfer Syntaxes for AUG-MODUP-MOD12**

| Information Object Definition | SOP Class UID | Transfer Syntax | Transfer Syntax UID |
|---|---|---|---|
| Computed Radiography Image Storage | 1.2.840.10008.5.1.4.1.1.1 | Explicit VR Little Endian Uncompressed | 1.2.840.10008.1.2.1 |
| CT Image Storage | 1.2.840.10008.5.1.4.1.1.2 | Explicit VR Little Endian Uncompressed | 1.2.840.10008.1.2.1 |
| MR Image Storage | 1.2.840.10008.5.1.4.1.1.4 | Explicit VR Little Endian Uncompressed | 1.2.840.10008.1.2.1 |
| Secondary Capture Image Storage | 1.2.840.10008.5.1.4.1.1.7 | Explicit VR Little Endian Uncompressed | 1.2.840.10008.1.2.1 |

*This Application Profile does not place any further restrictions on options or extensions for any of these* SOP classes. Any otherwise permissible SOP instance is acceptable for the AUG-MODUP-MOD12 profile.

#### D.3.1.2.2 Directory Augmentations

There are no additional directory keys, records, or options as part of this profile. None will be written as either FSU or FSC.

#### D.3.1.2.3 Other Augmentations

None.

### D.3.2 Private Profiles

None.



Copyright National Electrical Manufacturers Association
Provided by IHS under license with NEMA
No reproduction or networking permitted without license from IHS
Not for Resale

3.2-ENGL 2000 6470247 0525136 31T

Note If the devices supported profile cannot be described as Standard or Augmented Application Profiles, then a Private Profile would be defined here. All of the information contained in a PS 3.11 Annex would be included here. See PS 3.11 for more details and examples of profile definitions.

## D.4 EXTENSIONS, SPECIALIZATIONS, PRIVATIZATIONS OF SOP CLASSES AND TRANSFER SYNTAXES

None.

## D.5 CONFIGURATION

The MOD Update Device has three possible MOD drive configurations. If the 630MB-only drive is installed, the support for 1.2GB Profiles is eliminated. If the 1.2GB only drive is installed, the support for 630MB profiles is eliminated. If the dual mode drive is installed, all profiles are supported.

**Table D.5-1**
**Supported Profiles for various Drive Configurations**

| Disk Drive Installed | Profiles Supported |
|---|---|
| Dual-mode Drive | STD-US-ID-SF-MOD650,<br>STD-US-ID-SF-MOD12,<br>STD-US-ID-MF-MOD650,<br>STD-US-ID-MF-MOD12,<br>AUG-MODUP-MOD650,<br>AUG-MODUP-MOD12 |
| 630MB-only Drive | STD-US-ID-SF-MOD650,<br>STD-US-ID-MF-MOD650,<br>AUG-MODUP-MOD650 |
| 1.2GB-only Drive | STD-US-ID-SF-MOD12,<br>STD-US-ID-MF-MOD12,<br>AUG-MODUP-MOD12 |

## D.6 CHARACTER SETS

The MOD Update Device will only support copy of SOP Instances containing the DICOM default character set as defined in PS 3.5.

## D.7 CODES AND CONTROLLED TERMINOLOGY

The SOP Classes supported by this implementation do not support the use of Codes and Controlled Terminology.



Copyright National Electrical Manufacturers Association
Provided by IHS under license with NEMA
No reproduction or networking permitted without license from IHS
Not for Resale
70247 0525137 256



**NATIONAL ELECTRICAL MANUFACTURERS ASSOCIATION**
1300 NORTH 17TH STREET, SUITE 1847, ROSSLYN, VIRGINIA 22209

Copyright National Electrical Manufacturers Association
Provided by IHS under license with NEMA
No reproduction or networking permitted without license from IHS
Not for Resale