NEMA STANDARDS PUBLICATION NO. PS 3.11

nema

Digital Imaging and Communications in Medicine (DICOM)

Part 11: Media Storage Application Profiles

NEMA

NATIONAL ELECTRICAL MANUFACTURERS ASSOCIATION ■ 1300 N. 17th Street, Rosslyn, VA 22209

Copyright National Electrical Manufacturers Association
Provided by IHS under license with NEMA
No reproduction or networking permitted without license from IHS
Not for Resale

NEMA Standards Publication PS 3.11-1995

Digital Imaging and Communications in Medicine (DICOM)
Part 11: Media Storage Application Profiles

Approved by:
The American College of Radiology
The American College of Cardiology

Published by:

National Electrical Manufacturers Association
1300 N. 17th Street, Suite 1847
Rosslyn, Virginia 22209

© 1995 by National Electrical Manufacturers Association

Copyright National Electrical Manufacturers Association
Provided by IHS under license with NEMA
No reproduction or networking permitted without license from IHS
Not for Resale

CONTENTS

Page

Foreword 2

Clause

1 Scope and Field of Application 3
2 Normative references 4
3 Definitions 4
3.1 Reference Model Definitions 4
3.2 DICOM Introduction and Overview Definitions 4
3.3 DICOM Conformance 4
3.4 DICOM Information Object Definitions 4
3.5 DICOM Data Structure and Encoding Definitions 5
3.6 DICOM Message Exchange Definition 5
3.7 DICOM Media Storage and File Format Definitions 5
3.8 Media Storage Application Profiles 5
3.8.1 Application Profile Class 5
4 Symbols and Abbreviations 5
5 Conventions 6
6 Purpose of an Application Profile 6
7 Conformance Requirements 6
8 Structure of Application Profile 7
Class and Profile Identification – Section X.1 8
Clinical Context – Section X.2 8
Roles and Service Class Options – Section X.2.1 8
General Class Profile – Section X.3 8
SOP Classes and Transfer Syntaxes – Section X.3.1 8
Physical Media and Media Formats – Section X.3.2 8
Directory Information in DICOMDIR – Section X.3.3 9
Other Parameters – Section X.3.4 9
Specific Application Profiles – Section X.4 and following 9
Annex A (Normative) – Basic Cardiac X-ray Angiographic Application Profiles 10
A.1 Class and Profile Identification 10
A.2 Clinical Context 10
A.2.1 Roles and Service Class Options 11
A.2.1.1 File Set Creator 11
A.2.1.2 File Set Reader 11
A.2.1.3 File Set Updater 11
A.3 STD-XABC-CD Basic Cardiac Profile 11
A.3.1 SOP Classes and Transfer Syntaxes 12
A.3.2 Physical Media and Media Formats 12
A.3.3 Directory Information in DICOMDIR 12
A.3.3.1 Additional Keys 12
A.3.3.2 Icon Images 13
A.3.4 Other Parameters 13
A.3.4.1 Image Attribute Values 13
A.3.4.1.1 Attribute Value Precedence 14

Copyright National Electrical Manufacturers Association
Provided by IHS under license with NEMA
No reproduction or networking permitted without license from IHS Not for Resale

ACR-NEMA

Digital Imaging and Communications in Medicine
Part 11: Media Storage Application Profiles

FOREWORD

The American College of Radiology (ACR) and the National Electrical Manufacturers Association (NEMA) formed a joint committee to develop a Standard for Digital Imaging and Communications in Medicine. The ACC (American College of Cardiology) joined this standardization effort with a particular interest in the definition of Digital Media Storage Standards. This DICOM Standard was developed according to NEMA procedures.

This standard is developed in liaison with other standard organizations including CEN TC251 in Europe and JIRA in Japan, with review also by other organizations including IEEE, HL7 and ANSI in the USA.

The DICOM Standard is structured as a multi-part document using the guidelines established in the following document:

– ISO/IEC Directives, 1989 part 3 - Drafting and Presentation of International Standards.

This document is part of the DICOM Standard which consists of the following parts:

PS 3.1: Introduction and Overview
PS 3.2: Conformance
PS 3.3: Information Object Definitions
PS 3.4: Service Class Specifications
PS 3.5: Data Structures and Encoding
PS 3.6: Data Dictionary
PS 3.7: Message Exchange
PS 3.8: Network Communication Support for Message Exchange
PS 3.9: Point-to-Point Communication Support for Message Exchange
PS 3.10: Media Storage and File Formats for Media Interchange
PS 3.11: Media Storage Application Profiles
PS 3.12: Media Formats and Physical Media for Media Interchange
PS 3.13: Print Management Point-to-Point Communication Support

These parts are independent but related documents. Their development level and approval status may differ.

PS 3.7, PS 3.8, and PS 3.9 focus on the communication of digital image data across point-to-point and network interfaces. PS 3.10, PS 3.11, and PS 3.12 address the open interchange of digital image data on removable storage media. Their development takes into account past and current related efforts:

– The ACR-NEMA Standard for Magnetic Tape (PS1) has defined a generic means to store on a 9 track magnetic tape one or more Data Sets formatted per the ACR-NEMA V2.0 Standard

– A Japanese effort called IS&C (Image Save and Carry) has also used an ACR-NEMA V2.0-based format to store images on a 130 millimeter (5 1/4 inch) Magneto-Optical Disk with an IS&C specific media organization format

Copyright National Electrical Manufacturers Association
Provided by IHS under license with NEMA
No reproduction or networking permitted without license from IHS Not for Resale

– A European effort initiated by the University of Geneva in Switzerland has defined PAPYRUS, an ACR-NEMA V2.0-based format to store one or more images grouped as folders in files irrespective of the physical media and its file organization format. The new PAPYRUS V3.0 is intended to be a specific Application Profile compatible with this part

As both network communication and media interchange share a number of common characteristics, the following parts of DICOM developed for network communication are leveraged for media interchange:

– PS 3.2: Conformance
– PS 3.3: Information Object Definitions
– PS 3.4: Service Class Specifications
– PS 3.5: Data Set Structures and Encoding
– PS 3.6: Data Dictionary

PS 3.10, *Media Storage and File Formats for Media Interchange*, lays a foundation for two other parts of the DICOM Standard by specifying a general model for the storage of medical imaging information on removable media. PS 3.12, *Media Formats and Physical Media,* defines a number of standard Physical Media and corresponding Media Formats suitable for medical image information exchange. This part, PS 3.11, *Media Storage Application Profiles,* enables interoperability by specifying standard sets of elements from the various other parts of the DICOM Standard related to a specific clinical need. Conformance to DICOM in the area of media interchange is defined by PS 3.2 and is based on the Application Profiles defined by this part.

PS 3.11 and PS 3.12 will be expanded through the addition of Application Profile and media definition annexes as clinical needs and physical media technologies evolve.

1 Scope and field of application

This part of the DICOM Standard specifies application specific subsets of the DICOM Standard to which an implementation may claim conformance. Such a conformance statement applies to the interoperable interchange of medical images and related information on storage media for specific clinical uses. It follows the framework, defined in PS 3.10, for the interchange of various types of information on storage media.

This part is related to other parts of the DICOM Standard in that:

– PS 3.2, *Conformance*, specifies the general rules for assuring interoperability, which are applied for media interchange through the Application Profiles of this part
– PS 3.3, *Information Object Definitions*, specifies a number of Information Object Definitions (e.g., various types of images) which may be used in conjunction with this part. It also defines a medical Directory structure to facilitate access to the objects stored on media
– PS 3.4, *Service Class Specifications*, specifies the Media Storage Service Class upon which Application Profiles are built
– PS 3.5, *Data Structure and Encoding*, addresses the encoding rules necessary to construct a Data Set which is encapsulated in a file as specified in PS 3.10
– PS 3.6, *Data Dictionary*, contains an index by Tag of all Data Elements related to the Attributes of Information Objects defined in PS3.3. This index includes the Value Representation and Value Multiplicity for each Data Element
– PS 3.10, *Media Storage and File Formats for Media Interchange,* standardizes the overall open Storage Media architecture used by this part, including the definition of a generic File Format, a Basic File Service and a Directory concept
– PS 3.12, *Media Formats and Physical Media*, defines a number of standard Physical Media and corresponding Media Formats. These Media Formats and Physical Media selections are

Copyright National Electrical Manufacturers Association
Provided by IHS under license with NEMA
No reproduction or networking permitted without license from IHS Not for Resale

referenced by one or more of the Application Profiles of this part. PS 3.12 is intended to be extended as the technologies related to Physical Medium evolve

2 References

The following standards contain provisions which, through reference in this text, constitute provisions of this Standard. At the time of publication, the editions indicated were valid. All standards are subject to revision, and parties to agreements based on this Standard are encouraged to investigate the possibilities of applying the most recent editions of the standards indicated below.

ISO/IEC Directives, 1989 part 3 Drafting and presentation of international standards.
ISO 7498-1, Information Processing Systems – Open Systems Interconnection – Basic Reference Model.
ISO 8859, Information Processing – 8-bit single-byte coded graphic character sets – part 1: Latin Alphabet No. 1.

3 Definitions

For the purposes of this standard the following definitions apply.

3.1 *Reference model definitions*

This part of the Standard is based on the concepts developed in ISO 7498-1 and makes use of the following terms defined in it:

a) Application Entity
b) Service or Layer Service
c) Transfer Syntax

3.2 *DICOM introduction and overview definitions*

This part of the Standard makes use of the following terms defined in PS 3.1 of the DICOM Standard:

a) Attribute

3.3 *DICOM conformance*

This part of the Standard makes use of the following terms defined in PS 3.2 of the DICOM Standard:

a) Conformance Statement
b) Standard SOP Class
c) Standard Extended SOP Class
d) Specialized SOP Class
e) Private SOP Class
f) Standard Application Profile
g) Augmented Application Profile
h) Private Application Profile

3.4 *DICOM information object definitions*

This part of the Standard makes use of the following terms defined in PS 3.3 of the DICOM Standard:

a) Information Object Definition
b) Basic Directory IOD
c) Basic Directory Information Model

Copyright National Electrical Manufacturers Association
Provided by IHS under license with NEMA
No reproduction or networking permitted without license from IHS Not for Resale

3.5 *DICOM data structure and encoding definitions*

This part of the standard makes use of the following terms defined in PS 3.5 of the DICOM Standard:

a) Data Element
b) Data Set

3.6 *DICOM message exchange definitions*

This part of the Standard makes use of the following terms defined in PS 3.7 of the DICOM Standard:

a) Service Object Pair (SOP) Class
b) Service Object Pair (SOP) Instance
c) Implementation Class UID

3.7 *DICOM media storage and file format definitions*

This part of the standard makes use of the following terms defined in PS 3.10 of the DICOM Standard:

a) Application Profile
b) DICOM File Format
c) DICOM File Service
d) DICOM File
e) DICOMDIR File
f) File
g) File ID
h) File Meta Information
i) File-set
j) Media Storage Model

3.8 *Media storage application profiles*

This part of the DICOM Standard uses the following definitions:

3.8.1 APPLICATION PROFILE CLASS

A group of related Application Profiles defined in a single annex to this part.

4 Symbols and abbreviations

The following symbols and abbreviations are used in this part of the standard.

ACC American College of Cardiology
ACR American College of Radiology
AP Application Profile
ASCII American Standard Code for Information Interchange
AE Application Entity
ANSI American National Standards Institute
CEN TC 251 Comite Europeen de Normalisation – Technical Committee 251 – Medical Informatics
DICOM Digital Imaging and Communications in Medicine
FSC File-set Creator
FSR File-set Reader
FSU File-set Updater
HL7 Health Level 7
IEEE Institute of Electrical and Electronics Engineers

Copyright National Electrical Manufacturers Association
Provided by IHS under license with NEMA
No reproduction or networking permitted without license from IHS Not for Resale

IS&C Image Save and Carry
ISO International Standards Organization
ID Identifier
IOD Information Object Definition
JIRA Japan Industries Association of Radiation Apparatus
NEMA National Electrical Manufacturers Association
OSI Open Systems Interconnection
SOP Service-Object Pair
TCP/IP Transmission Control Protocol/Internet Protocol
UID Unique Identifier
VR Value Representation

5 Conventions

Words are capitalized in this document to help the reader understand that these words have been previously defined in Section 3 of this document and are to be interpreted with that meaning.

6 Purpose of an Application Profile

An Application Profile is a mechanism for selecting an appropriate set of choices from the parts of DICOM for the support of a particular media interchange application. Application Profiles for commonly used interchange scenarios, such as inter-institutional exchange of x-ray cardiac angiographic examinations, or printing ultrasound studies from recordable media, are meant to use the flexibility offered by DICOM without resulting in so many media and format choices that interchange is compromised.

Media interchange applications claim conformance to one or more Media Storage Application Profiles. Two implementations that conform to identical Application Profiles and support complementary File-set roles (e.g. an FSC interchanging media with an FSR) are able to exchange SOP Instances (pieces of DICOM information) on recorded media within the context of those Application Profiles.

A DICOM Application Profile specifies:

- which SOP Classes and options must be supported, including any required extensions, specializations, or privatizations
- for each SOP Class, which Transfer Syntaxes may be used
- what information should be included in the Basic Directory IOD
- which Media Storage Service Class options may be utilized
- which roles an application may take: File-set Creator, File-set Reader, and/or File-set Updater
- which physical media and corresponding media formats must be supported

and any additional conformance requirements.

The result of making the necessary choices means that the Application Profile can be thought of as a vertical path through the various parts of DICOM that begins with choices of information to be exchanged and ends at the physical medium. Figure 6-1 shows the relationship between the concepts used in an Application Profile and the parts of DICOM.

Copyright National Electrical Manufacturers Association
Provided by IHS under license with NEMA
No reproduction or networking permitted without license from IHS Not for Resale

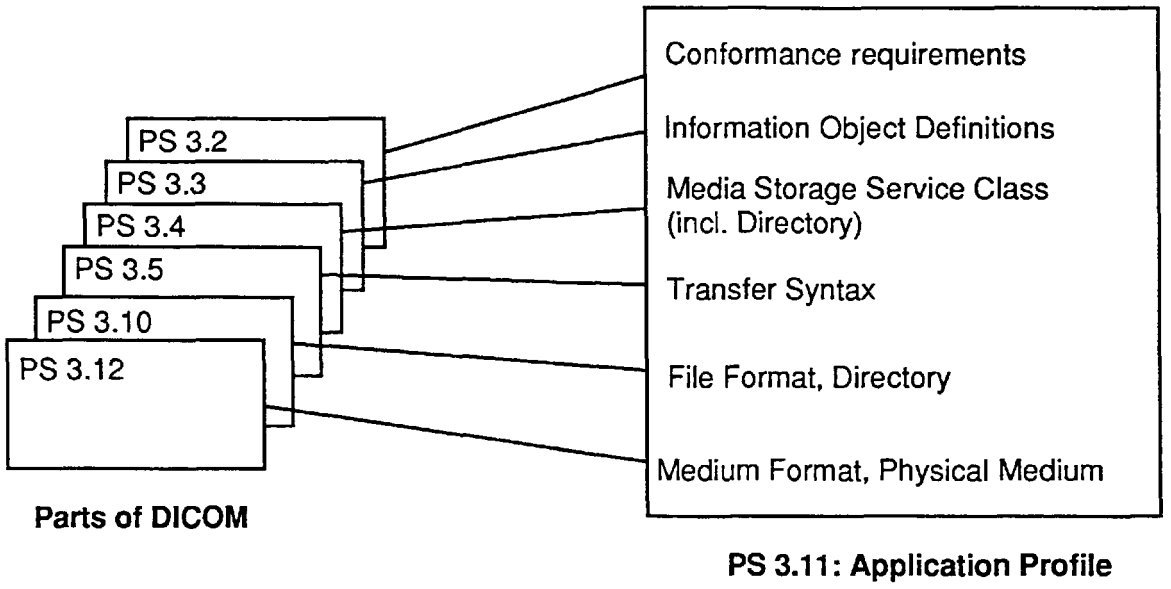

Figure 6-1 — Relationship between an Application Profile and parts of DICOM

An Application Profile is organized into the following major parts:

- The name of the Application Profile, or the list of Application Profiles grouped in a related class
- A description of the clinical context of the Application Profile
- The definition of the Media Storage Service Class with the device Roles for the Application Profile and associated options
- An informative section describing the operational requirements of the Application Profile
- Specification of the SOP Classes and associated IODs supported and the Transfer Syntaxes to be used
- The selection of Media Format and Physical Media to be used
- If the Directory Information Module is used, the description of the minimum subset of the Information Model required
- Other parameters which need to be specified to ensure interoperable media interchange

The structure of DICOM and the design of the Application Profile mechanism is such that extension to additional SOP Classes and new exchange media is straightforward.

7 Conformance requirements

Implementations may claim conformance to one or more PS 3.11 Application Profiles in a Conformance Statement as outlined in PS 3.2.

NOTE—Additional specific conformance requirements for an Application Profile may be listed in the Application Profile definition.

Copyright National Electrical Manufacturers Association
Provided by IHS under license with NEMA
No reproduction or networking permitted without license from IHS Not for Resale

8 Structure of application profile

Application Profiles specific to various clinical areas are defined in the annexes to this part. Each Annex defines an Application Profile Class related to a single area of medical practice, e.g., cardiology, or to a single functional context, e.g., image transfer to a printer system. Several specific Application Profiles may be defined in each Application Profile class, and an identification scheme is established to label each specific Application Profile.

An example of an Application Profile structure is provided in below. The section identifier "X" should be replaced by the identifier of the annex.

Class and Profile Identification – Section X.1

Section X.1 of the Application Profile defines the class and specific Application Profiles in that class. This section assigns an identifier to each Application Profile of the form ttt-x...x-y...y, where "ttt" indicates the type of Application Profile, "x...x" is an abbreviation of a significant term for the clinical context and "y...y" is a significant term for a distinguishing feature of the specific Application Profile. The "ttt" type term shall be one of STD, AUG, or PRI, indicating whether the Application Profile is a Standard, Augmented, or Private Application Profile respectively (see PS 3.2). Neither "x...x" nor "y...y" is restricted in length or content.

Clinical Context – Section X.2

Section X.2 of the Application Profile shall describe the clinical need for the interchange of medical images and related information on storage media, and its context of application. This section shall not require any specific functionality of the Application Entities exchanging information using media interchange beyond their capabilities in the roles of File-set Creator, File-set Reader, and File-set Updater.

NOTE—This Section does not, for example, place any graphical presentation or performance requirements on workstations which read DICOM interchange media. Such requirements are beyond the scope of a DICOM Media Storage Application Profile. The requirements which fall within the scope of an Application Profile are the specific functional storage media interchange capabilities associated with the defined roles.

Roles and Service Class Options – Section X.2.1

Section X.2.1 describes the Service Class Options used and the contextual application of the roles of File-set Creator, File-set Reader, and File-set Updater.

General Class Profile – Section X.3

Section X.3 defines characteristics of the Application Profile Class that are constant across all specific Application Profiles in the class.

SOP Classes and Transfer Syntaxes – Section X.3.1

Section X.3.1 lists the SOP Classes and Transfer Syntaxes common to all specific Application Profiles in the class, if any. This section specifies which SOP Classes are mandatory and optional for the roles of FSC, FSR, and FSU, including any required groupings or SOP options.

Physical Media And Media Formats – Section X.3.2

Section X.3.2 defines the physical media and corresponding media formats common to all specific Application Profiles in the class, if any.

This section also specifies any file service functionality beyond the DICOM File Service required by the clinical application to be supplied by the Media Format Layer.

Copyright National Electrical Manufacturers Association
Provided by IHS under license with NEMA
No reproduction or networking permitted without license from IHS Not for Resale

Directory Information in DICOMDIR – Section X.3.3

Section X.3.3 specifies the type of Directory Records that shall be supported and any additional associated keys. It also defines any extensions to or specializations of the Basic Directory Information Object Definition, if any.

Other Parameters – Section X.3.4

Section X.3.4 is optional; if present, it should define any other parameters common to all specific Application Profiles in the class which may need to be specified in order to ensure interoperable media interchange.

Specific Application Profiles – Section X.4 and following

Sections X.4.and following, each define the unique characteristics of a specific Application Profile. If there are any Application Profile specific changes to IODs, Transfer Syntax, DICOMDIR, or other general class requirements, they should be described for each Application Profile that specifies such changes.

Copyright National Electrical Manufacturers Association
Provided by IHS under license with NEMA
No reproduction or networking permitted without license from IHS Not for Resale

Annex A
(Normative)
Basic Cardiac X-ray Angiographic Application Profile

A.1 Class and profile identification

This Annex defines an Application Profile Class for Basic Cardiac X-ray Angiographic clinical applications.

The identifier for this class shall be STD-XABC. This annex is concerned only with cardiac angiography.

The specific Application Profile in this class is shown in the Table A.1-1.

NOTE—This table contains only a single Application Profile. It is expected that additional Application Profiles may be added to PS 3.11.

Table A.1-1 — Basic Cardiac XA Profile

Application Profile	Identifier	Description
Basic Cardiac X-Ray Angiographic Studies on CD-R Media	STD-XABC-CD	It handles single frame or multi-frame digital images up to 512x512x8 bits; biplane acquisitions are encoded as two single plane information objects.

A.2 Clinical context

This Application Profile Class facilitates the interchange of primary digital X-ray cine runs, typically acquired as part of cardiac catheterization procedures. Typical media interchanges would be from in-lab acquisition equipment to either a display workstation or to a data archive system, or between a display workstation and a data archive system (in both directions). This context is shown in figure A.2-1 below.

Figure A.2-1 — Clinical Context Diagram

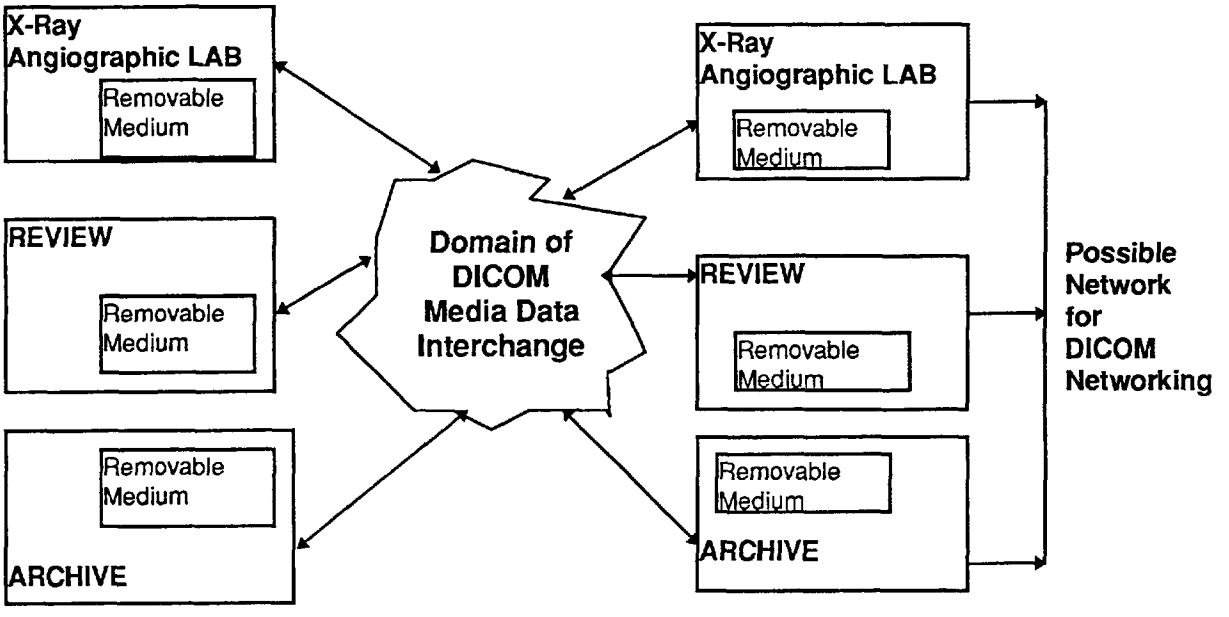

Copyright National Electrical Manufacturers Association
Provided by IHS under license with NEMA
No reproduction or networking permitted without license from IHS Not for Resale

The operational use of media interchange is potentially both intra-institutional and inter-institutional.

A.2.1 *Roles and service class options*

This Application Profile Class uses the Media Storage Service Class defined in PS 3.4 with the Interchange Option.

The Application Entity shall support one or more of the roles of File-set Creator, File-set Reader, and File-set Updater, defined in PS 3.10.

A.2.1.1 FILE SET CREATOR

The Application entity acting as a File-Set Creator generates a File Set under the STD-XABC Application Profile Class. Typical entities using this role would include X-ray angiographic lab equipment, and archive systems which generate a patient record for transfer to another institution. File Set Creators shall be able to generate the Basic Directory SOP Class in the DICOMDIR File with all types of Directory Records related to the SOP Classes stored in the File-set.

FSC shall offer the ability to either finalize the disc at the completion of the most recent write session (no additional information can be subsequently added to the disc) or to allow multi-session (additional information may be subsequently added to the disk).

NOTE—A multiple volume (a logical volume that can cross multiple physical media) is not supported by this Application Profile Class. If a set of Files, e.g., a Study, cannot be written entirely on one CD-R, the FSC will create multiple independent DICOM File-sets such that each File-set can reside on a single CD-R media controlled by its individual DICOMDIR file. The user of the FSC can opt to use written labels on the discs to indicate that there is more than one disc for this set of files (e.g., a study).

A.2.1.2 FILE SET READER

The role of File Set Reader is used by Application Entities which receive a transferred File Set. Typical entities using this role would include display workstations, and archive systems which receive a patient record transferred from another institution. File Set Readers shall be able to read all the SOP Classes defined for the specific Application Profile for which a Conformance Statement is made, using all the defined Transfer Syntaxes.

A.2.1.3 FILE SET UPDATER

The role of File Set Updater is used by Application Entities which receive a transferred File Set and update it by the addition of information. Typical entities using this role would include analytic workstations, which, for instance, may add to the File-set an information object containing a processed (e.g., edge-enhanced) image. Stations which update patient information objects would also use this role. File-set Updaters do not have to read the images. File-set Updaters shall be able to generate one or more of the SOP Instances defined for the specific Application Profile for which a conformance statement is made, and to read and update the DICOMDIR file.

FSU shall offer the ability to either finalize the disc at the completion of the most recent write session (no additional information can be subsequently added to the disc) or to allow multi-session (additional information may be subsequently added to the disk).

NOTE—If the disc has not been closed out, the File-set Updater shall be able to update information assuming there is enough space on the disc to write a new DICOMDIR file, the information, and the fundamental CD-R control structures. CD-R control structures are the structures that are inherent to the CD-R standards, see PS 3.12.

Copyright National Electrical Manufacturers Association
Provided by IHS under license with NEMA
No reproduction or networking permitted without license from IHS Not for Resale

A.3 STD-XABC-CD basic cardiac profile

A.3.1 *SOP classes and transfer syntaxes*

This Application Profile is based on the Media Storage Service Class with the Interchange Option (see PS 3.4).

SOP Classes and corresponding Transfer Syntaxes supported by this Application Profile are specified in the Table A.3-1.

Table A.3-1 — STD-XABC-CD SOP Classes and Transfer Syntaxes

Information Object Definition	Service Object Pair Class UID	Transfer Syntax and UID	FSC Requirement	FSR Requirement	FSU Requirement
Basic Directory	1.2.840.10008.1.3.10	Explicit VR Little Endian Uncompressed 1.2.840.10008.1.2.1	Mandatory	Mandatory	Mandatory
X-Ray Angiographic Image	1.2.840.10008.5.1.4.1.1.12.1	JPEG Lossless Process 14 (selection value 1) 1.2.840.10008.1.2.4.70	Mandatory	Mandatory	Optional
Detached Patient Management	1.2.840.10008.3.1.2.1.1	Explicit VR Little Endian Uncompressed 1.2.840.10008.1.2.1	Optional	Optional	Optional

NOTES

1 This application profile does not allow the use of the X-Ray Angiographic BiPlane Image Object. Biplane acquisitions must therefore be transferred as two single plane SOP instances. A future Application Profile that permits X-Ray Angiographic BiPlane Image Object transfer is under development.

2 This Applicaton Profile includes only the XA Image and Detached Patient Management SOP Instances. It does not include Standalone Curve, Modality LUT, VOI LUT, or Overlay SOP Instances.

A.3.2 *Physical media and media formats*

Basic Cardiac Application Profiles in the STD-XABC class require the 120 mm CD-R physical media with the ISO/IEC 9660 Media Format, as defined in PS3.12.

A.3.3 *Directory information in DICOMDIR*

Conformant Application Entities shall include in the DICOMDIR File a Basic Directory IOD containing Directory Records at the Patient and subsidiary levels appropriate to the SOP Classes in the File-set.

NOTE—DICOMDIRs with no directory information are not allowed by this Application Profile.

A.3.3.1 ADDITIONAL KEYS

Table A.3-2 specifies the type of Directory Records that shall be supported and the additional associated keys. Refer to the Basic Directory IOD in PS 3.3.

Copyright National Electrical Manufacturers Association
Provided by IHS under license with NEMA
No reproduction or networking permitted without license from IHS Not for Resale

Table A.3-2 — APL-XA-BCCD additional DICOMDIR keys

Key Attribute	Tag	Directory Record Type	Type	Notes
Date of Birth	(0010,0030)	PATIENT	2	
Sex	(0010,0040)	PATIENT	2	
Institution Name	(0008,0080)	SERIES	2	
Institution Address	(0008,0081)	SERIES	2	
Performing Physician	(0008,1050)	SERIES	2	
Icon Image Sequence	(0088,0200)	IMAGE	1	
Image Type	(0008,0008)	IMAGE	1	
Calibration Image	(0050,0004)	IMAGE	2	
Referenced Image Sequence	(0008,1140)	IMAGE	1C	Required if the SOP Instance referenced by the Directory Record has an Image Type (0008,0008) of BIPLANE A or BIPLANE B.
>Referenced SOP Class UID	(0008,1150)	IMAGE	1C	Required if Referenced Image Sequence (0008,1140) is present
>Referenced SOP Instance UID	(0008,1155)	IMAGE	1C	Required if Referenced Image Sequence (0008,1140) is present

A.3.3.2 ICON IMAGES

Directory Records of type IMAGE shall include Icon Images. The icon pixel data shall be supported with Bits Allocated (0028,0100) equal to 8 and Row (0028,0010) and Column (0028,0011) attribute values of 128.

NOTES

1 This icon size is larger than that recommended in PS 3.10 because the 64x64 icon would not be clinically useful for identifying and selecting x-ray angiographic images.

2 For multi-frame images, it is recommended that the icon image be derived from the frame identified in the Directory Frame Number attribute (0028,6010), if defined for the image SOP Instance. If the Directory Frame Number is not present, a frame approximately one-third of the way through the multi-frame image should be selected. The process to reduce a 512x512 image to a 128x128 image is beyond the scope of this standard.

A.3.4 *Other parameters*

This section defines other parameters common to all specific Application Profiles in the STD-XABC class which need to be specified in order to ensure interoperable media interchange.

A.3.4.1 IMAGE ATTRIBUTE VALUES

The attributes listed in Table A.3-3 used within the X-Ray Angiographic Image files shall take the values specified.

Copyright National Electrical Manufacturers Association
Provided by IHS under license with NEMA
No reproduction or networking permitted without license from IHS Not for Resale

Table A.3-3 — STD-XABC-CD- Required Image Attribute Values

Attribute	Tag	Value
Modality	(0008,0060)	XA
Rows	(0028,0010)	512 (see below)
Columns	(0028,0011)	512 (see below)
Bits Allocated	(0028,0100)	8
Bits Stored	(0028,0101)	8

When creating or updating a File-set, Rows or Columns shall not exceed a value of 512. When reading a File-set, an FSR or FSU shall accept a value of at least 512 for Rows or Columns.

Overlay data, if present, shall be encoded in Overlay Data (60XX,3000).

A.3.4.1.1 ATTRIBUTE VALUE PRECEDENCE

The values of attributes contained in a Detached Patient Management SOP Instance referenced by a Directory Record of type PATIENT shall take precedence over the values of those attributes contained in a SOP Instance referenced by a subsidiary Directory Record. The DICOMDIR Directory Records of type PATIENT shall have key attribute values in accordance with this precedence.

NOTE—This allows patient identification and demographic information to be updated without changing the composite Image IOD files. The DICOMDIR file is critical in establishing the link between the updated information and the image. As an example, at the time an Image file was written, the patient's name was incorrect, or inconsistent with the Hospital Information System records. Subsequently, a Detached Patient Management file with the corrected name is added to the File-set. If the FSR supports the Detached Patient Management SOP Class, then the FSR should use the information from this SOP Class rather than the information in the Image file.

Copyright National Electrical Manufacturers Association
Provided by IHS under license with NEMA
No reproduction or networking permitted without license from IHS Not for Resale

NEMA STANDARDIZATION BACKGROUND

The purpose of NEMA standards, their classification, and status are set forth in certain clauses of the NEMA *Standardization Policies and Procedures* manual and are referenced below:

Purpose of Standards

National Electrical Manufacturers Association Standards are adopted in the public interest and are designed to eliminate misunderstandings between the manufacturer and the purchaser and to assist the purchaser in selecting and obtaining the proper product for their particular needs. Existence of a National Electrical Manufacturers Association Standard does not in any respect preclude any member or nonmember from manufacturing or selling products not conforming to the standard.

Definition of a Standard

A standard of the National Electrical Manufacturers Association defines a product, process, or procedure with reference to one or more of the following: nomenclature, composition, dimensions, tolerances, safety, operating characteristics, performance, rating, testing, and the service for which they are designed.

(Standardization Policies and Procedures, p. 1)

Dimensions

Where dimensions are given for interchangeability purposes, alternate dimensions satisfying the other provisions of the Standards Publication may be capable of otherwise equivalent performance.

(Standardization Policies and Procedures, p. 6)

Categories of Standards

National Electrical Manufacturers Association Standards are of three classes, which have received the affirmative vote of at least two-thirds of the Subdivision votes cast in the affirmative or negative:

1. NEMA Standard, which relates to a product, process, or procedure commercially standardized and subject to repetitive manufacture.
2. Suggested Standard for Future Design, which may not have been regularly applied to a commercial product, but which suggests a sound engineering approach to future development.
3. Adoptive Standard, which is adopted in whole or in part from the standards of another organization, either domestic, regional, or international.

(Standardization Policies and Procedures, pp. 5)

Authorized Engineering Information

Authorized Engineering Information consists of explanatory data and other engineering information of an informative character not falling within the classification of NEMA Standard or Suggested Standard for Future Design, which standard has received the affirmative vote of at least two-thirds of the Subdivision votes cast in the affirmative or negative.

(Standardization Policies and Procedures, pp. 5)

Identification of Status

Standards in NEMA Standards Publications are identified as "NEMA Standard," "Suggested Standard for Future Design," or "Adoptive Standard." These indicate the status of the standard. A statement incorporating the auxiliary verb "shall" indicates that compliance with a requirement is mandatory for compliance with the standard. These classes of standards are identified in the foreword or throughout the text.

The material identified as "Authorized Engineering Information" is designated similarly. Statements incorporating other auxiliary verbs such as "should," "may," etc. refer to the authorized engineering information and not to procedures required for compliance with the standard.

Copyright National Electrical Manufacturers Association
Provided by IHS under license with NEMA
No reproduction or networking permitted without license from IHS
Not for Resale

MEDICAL PICTURE ARCHIVING AND COMMUNICATIONS SYSTEMS SECTION OF THE NATIONAL ELECTRICAL MANUFACTURERS ASSOCIATION

MEMBER COMPANIES

Acuson
Mountain View, CA

AGFA Division of Miles, Inc.
Torrence, CA

ATL
Allendale, NJ

Camtronics Ltd. Medical Systems
Hartland, WI

CEMAX, Inc.
Fremont, CA

Dejarnette Research Systems
Towson, MD

Digitec Corporation
Orlando, FL

E. I. DuPont de Nemours & Company
Wilmington, DE

Kodak Health Imaging Systems
Richardson, TX

Eigen
Nevada City, CA

GE Medical Systems
Milwaukee, WI

InfiMed, Inc.
Liverpool, NY

Loral Medical Systems
San Jose, CA

Merge Technologies, Inc.
Milwaukee, WI

Oldelft Corporation of America
Fairfax, VA

Philips Medical Systems,
North America Company
Shelton, CT

Picker International, Inc.
Highland Heights, OH

Polaroid Corporation
Cambridge, MA

Siemens Medical Systems, Inc.
Iselin, NJ

S M S
Malvern, PA

Sony Medical Systems Division
Montvale, NJ

3M
St. Paul, MN

Tomtec Imaging Systems
Boulder, CO

Toshiba America Medical Systems, Inc.
Tustin, CA

Witt Biomedical, Inc.
Melbourne, FL

Copyright National Electrical Manufacturers Association
Provided by IHS under license with NEMA
No reproduction or networking permitted without license from IHS
Not for Resale