DICOM

Part 1

Introduction and Overview

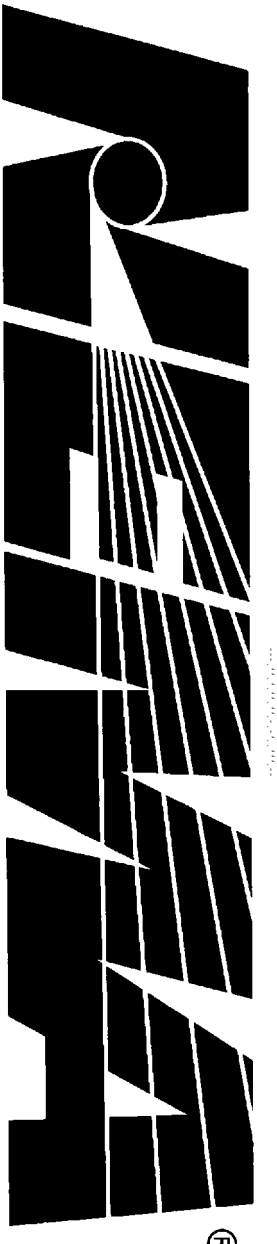

DICOM®

Digital Imaging and Communications in Medicine

Reproduced by

GLOBAL ENGINEERING DOCUMENTS™
An *IHS GROUP* Company

with the Permission of NEMA Under Royalty Agreement

Copyright National Electrical Manufacturers Association
Provided by IHS under license with NEMA
No reproduction or networking permitted without license from IHS Not for Resale

Digital Imaging and Communications in Medicine (DICOM)

Part 1: Introduction and Overview

Published by

National Electrical Manufacturers Association
1300 N. 17th Street
Rosslyn, Virginia 22209 USA

© Copyright 2000 by the National Electrical Manufacturers Association. All rights including translation into other languages, reserved under the Universal Copyright Convention, the Berne Convention or the Protection of Literacy and Artistic Works, and the International and Pan American Copyright Conventions.

Copyright National Electrical Manufacturers Association
Provided by IHS under license with NEMA
No reproduction or networking permitted without license from IHS
Not for Resale

CONTENTS

Clause Page

FOREWORD ii
1 Scope and field of application 1
2 Normative references 2
3 Definitions 3
4 Symbols and abbreviations 4
5 Goals of the DICOM standard 4
6 Overview of the Content of the DICOM Standard 5
6.1 DOCUMENT STRUCTURE 5
6.2 PS 3.2: CONFORMANCE 5
6.3 PS 3.3: INFORMATION OBJECT DEFINITIONS 6
6.4 PS 3.4: SERVICE CLASS SPECIFICATIONS 7
6.5 PS 3.5: DATA STRUCTURE AND SEMANTICS 7
6.6 PS 3.6: DATA DICTIONARY 8
6.7 PS 3.7: MESSAGE EXCHANGE 8
6.8 PS 3.8: NETWORK COMMUNICATION SUPPORT FOR MESSAGE EXCHANGE 8
6.9 PS 3.9: POINT-TO-POINT COMMUNICATION SUPPORT FOR MESSAGE EXCHANGE 10
7 Relationships of parts of the standard 12

Copyright National Electrical Manufacturers Association
Provided by IHS under license with NEMA
No reproduction or networking permitted without license from IHS

Not for Resale

STD-NEMA PS 3.1-ENGL 2000 6470247 0525042 732

FOREWORD

ACR (the American College of Radiology) and NEMA (the National Electrical Manufacturers Association) formed a joint committee to develop a Standard for Digital Imaging and Communications in Medicine. This DICOM Standard was developed according to the NEMA Procedures.

This Standard is developed in liaison with other Standardization Organizations including CEN TC251 in Europe and JIRA in Japan, with review also by other organizations including IEEE, HL7 and ANSI in the USA.

The DICOM Standard is structured as a multi-part document using the guidelines established in the following document:

— ISO/IEC Directives, 1989 Part 3: Drafting and Presentation of International Standards.

This document is one part of the DICOM Standard which consists of the following parts:

PS 3.1: Introduction and Overview

PS 3.2: Conformance

PS 3.3: Information Object Definitions

PS 3.4: Service Class Specifications

PS 3.5: Data Structure and Encoding

PS 3.6: Data Dictionary

PS 3.7: Message Exchange

PS 3.8: Network Communication Support for Message Exchange

PS 3.9: Point-to-Point Communication Support for Message Exchange

PS 3.10: Media Storage and File Format for Data Interchange

PS 3.11: Media Storage Application Profiles

PS 3.12: Storage Functions and Media Formats for Data Interchange

PS 3.13: Print Management Point-to-Point Communication Support

PS 3.14: Grayscale Standard Display Function

PS 3.15: Security Profiles

These Parts are related but independent documents. Their development level and approval status may differ.

Copyright National Electrical Manufacturers Association
Provided by IHS under license with NEMA
No reproduction or networking permitted without license from IHS

Not for Resale

INTRODUCTION

History

With the introduction of computed tomography (CT) followed by other digital diagnostic imaging modalities in the 1970's, and the increasing use of computers in clinical applications, the American College of Radiology (ACR) and the National Electrical Manufacturers Association (NEMA) recognized the emerging need for a standard method for transferring images and associated information between devices manufactured by various vendors. These devices produce a variety of digital image formats.

The American College of Radiology (ACR) and the National Electrical Manufacturers Association (NEMA) formed a joint committee in 1983 to develop a standard to:

- Promote communication of digital image information, regardless of device manufacturer
- Facilitate the development and expansion of picture archiving and communication systems (PACS) that can also interface with other systems of hospital information
- Allow the creation of diagnostic information data bases that can be interrogated by a wide variety of devices distributed geographically.

ACR-NEMA Standards Publication No. 300-1985, published in 1985 was designated version 1.0. The Standard was followed by two revisions: No. 1, dated October 1986 and No. 2, dated January 1988.

ACR-NEMA Standards Publication No. 300-1988, published in 1988 was designated version 2.0. It included version 1.0, the published revisions, and additional revisions. It also included new material to provide command support for display devices, to introduce a new hierarchy scheme to identify an image, and to add data elements for increased specificity when describing an image.

These Standards Publications specified a hardware interface, a minimum set of software commands, and a consistent set of data formats.

The DICOM Standard

This Standard, now designated Digital Imaging and Communications in Medicine (DICOM) Version 3.0, embodies a number of major enhancements to previous versions of the Standard:

a. It is applicable to a networked environment. The previous versions were applicable in a point-to-point environment only; for operation in a networked environment a Network Interface Unit (NIU) was required. DICOM Version 3.0 supports operation in a networked environment using industry standard networking protocols such as OSI and TCP/IP.

b. It specifies how devices claiming conformance to the Standard react to commands and data being exchanged. Previous versions were confined to the transfer of data, but DICOM Version 3.0 specifies, through the concept of Service Classes, the semantics of commands and associated data.

c. It specifies levels of conformance. Previous versions specified a minimum level of conformance. DICOM Version 3.0 explicitly describes how an implementor must structure a Conformance Statement to select specific options.

d. It is structured as a multi-part document. This facilitates evolution of the Standard in a rapidly evolving environment by simplifying the addition of new features. ISO directives which define how to structure multi-part documents have been followed in the construction of the DICOM Standard.

e. It introduces explicit Information Objects not only for images and graphics but also for studies, reports, etc.

Copyright National Electrical Manufacturers Association
Provided by IHS under license with NEMA
No reproduction or networking permitted without license from IHS

- Official Standard -
Not for Resale

STD-NEMA PS 3.1 ENGL 2000 ■ 4470247 0525044 505 ■

f. It specifies an established technique for uniquely identifying any Information Object. This facilitates unambiguous definitions of relationships between Information Objects as they are acted upon across the network.

Future directions

It is anticipated that the DICOM Standard will be an evolving standard and that proposals for enhancements will be forthcoming from the member organizations based on input from users of the Standard. These proposals will be considered for future versions of the Standard. A requirement in updating the Standard is to maintain effective compatibility with previous versions.

In the preparation of this Standard, suggestions and comments from users, vendors, and other interested parties have been sought, evaluated, and included. Inquiries, comments, and proposed or recommended revisions should be submitted to the Diagnostic Imaging and Therapy Systems Division of NEMA by contacting:

Vice-President, Engineering Department
National Electrical Manufacturers Association
2101 L Street, N.W. Suite 300
Washington, D.C. 20037 USA

Copyright National Electrical Manufacturers Association
Provided by IHS under license with NEMA
No reproduction or networking permitted without license from IHS

Not for Resale

1 Scope and field of application

PS 3.1 provides an overview of the entire Digital Imaging and Communications in Medicine (DICOM) Standard. It describes the history, scope, goals, and structure of the Standard. In particular, it contains a brief description of the contents of each part of the Standard.

The DICOM Standard facilitates interoperability of medical imaging equipment by specifying:

- A set of protocols to be followed by devices claiming conformance to the Standard.
- The syntax and semantics of Commands and associated information which can be exchanged using these protocols.
- Information that must be supplied with an implementation for which conformance to the Standard is claimed.

The DICOM Standard does not specify:

- The implementation details of any features of the Standard on a device claiming conformance.
- The overall set of features and functions to be expected from a system implemented by integrating a group of devices each claiming DICOM conformance.
- A testing/validation procedure to assess an implementation's conformance to the Standard.

The DICOM Standard pertains to the field of Medical Informatics. Within that field, it addresses the exchange of digital information between medical imaging equipment. Because medical imaging equipment may interoperate with other medical devices, the scope of this Standard needs to overlap with other areas of medical informatics, as shown in figure 1-1. However, the DICOM Standard does not address the breadth of this field.

Copyright National Electrical Manufacturers Association
Provided by IHS under license with NEMA
No reproduction or networking permitted without license from IHS

Not for Resale

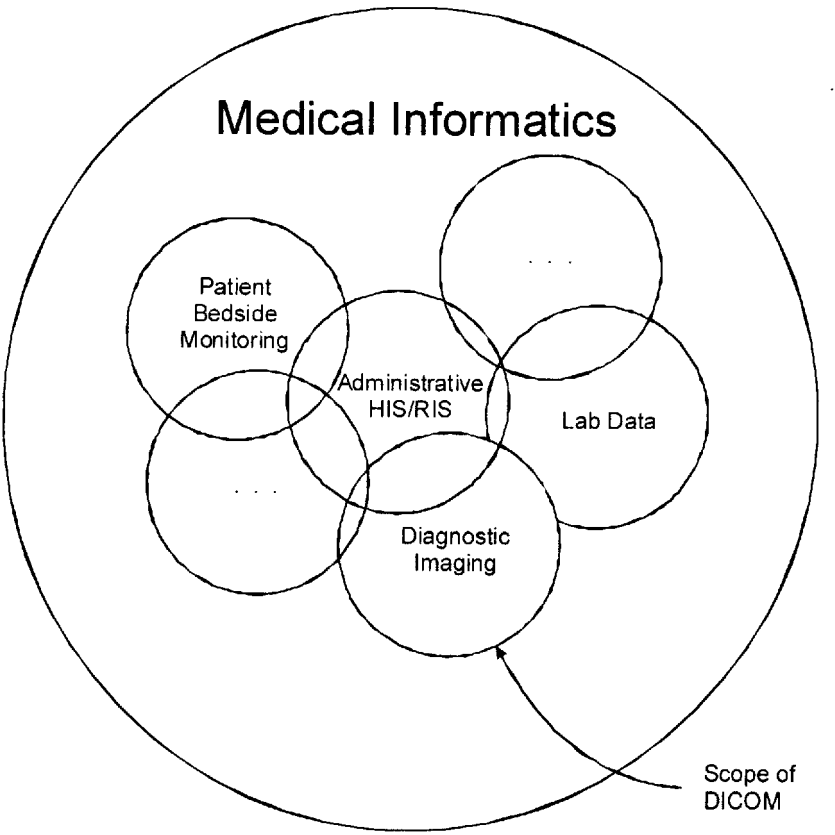

Figure 1-1
SCOPE OF DICOM IN MEDICAL INFORMATICS

2 Normative references

ISO/IEC Directives, 1989 Part 3 - Drafting and presentation of International Standards.

ACR-NEMA 300-1988 Digital Imaging and Communications

ISO 8822, Information Processing Systems - Open Systems Interconnection - Connection Oriented Presentation Service Definition.

Copyright National Electrical Manufacturers Association
Provided by IHS under license with NEMA
No reproduction or networking permitted without license from IHS

Not for Resale

ISO 8649, Information Processing Systems - Open Systems Interconnection - Service Definition for the Association Control Service Element.

3 Definitions

Attribute: A property of an Information Object. An Attribute has a name and a value which are independent of any encoding scheme.

Command: A generic means to convey a request to operate on Information Objects across an interface or network.

Command Element: An encoding of a parameter of a command which conveys this parameter's value.

Command Stream: The result of encoding a set of DICOM Command Elements using the DICOM encoding scheme.

Conformance Statement: A formal statement associated with a specific implementation of the DICOM Standard. It specifies the Service Classes, Information Objects, and Communication Protocols supported by the implementation.

Data Dictionary: A registry of DICOM Data Elements which assigns a unique tag, a name, value characteristics, and semantics to each Data Element.

Data Element: A unit of information as defined by a single entry in the data dictionary.

Data Set: Exchanged information consisting of a structured set of Attribute values directly or indirectly related to Information Objects. The value of each Attribute in a Data Set is expressed as a Data Element.

Data Stream: The result of encoding a Data Set using the DICOM encoding scheme (Data Element Numbers and representations as specified by the Data Dictionary).

Information Object: An abstraction of a real information entity (e.g., CT Image, Study, etc.) which is acted upon by one or more DICOM Commands.

Information Object Class: A formal description of an Information Object which includes a description of its purpose and the Attributes it posseses. It does not include values for these attributes.

Information Object Instance: A representation of an occurance of an real-world entity, which includes values for the Attributes of the Information Object Class to which the entity belongs.

Message: A data unit of the Message Exchange Protocol exchanged between two cooperating DICOM Application Entities. A Message is composed of a Command Stream followed by an optional Data Stream.

Service Class: A structured description of a service which is supported by cooperating DICOM Application Entities using specific DICOM Commands acting on a specific class of Information Object.

Copyright National Electrical Manufacturers Association
Provided by IHS under license with NEMA
No reproduction or networking permitted without license from IHS
- Official Standard -
Not for Resale
NEMA PS 3.1-ENGL 2000 6470247 0525048 150

4 Symbols and abbreviations

ACSE Association Control Service Element

CT Computed Tomography

DICOM Digital Imaging and Communications in Medicine

HIS Hospital Information System

NIU Network Interface Unit

OSI Open Systems Interconnection

PACS Picture Archiving and Communication Systems

RIS Radiology Information System

TCP/IP Transmission Control Protocol/Internet Protocol

5 Goals of the DICOM standard

The DICOM Standard facilitates interoperability of devices claiming conformance. In particular, it:

- Addresses the semantics of Commands and associated data. For devices to interact, there must be standards on how devices are expected to react to Commands and associated data, not just the information which is to be moved between devices;
- Is explicit in defining the conformance requirements of implementations of the Standard. In particular, a conformance statement must specify enough information to determine the functions for which interoperability can be expected with another device claiming conformance.
- Facilitates operation in a networked environment, without the requirement for Network Interface Units.
- Is structured to accommodate the introduction of new services, thus facilitating support for future medical imaging applications.
- Makes use of existing international standards wherever applicable, and itself conforms to established documentation guidelines for international standards.

Even though the DICOM Standard has the potential to facilitate implementations of PACS solutions, use of the Standard alone does not guarantee that all the goals of a PACS will be met. This Standard facilitates interoperability of systems claiming conformance in a multi-vendor environment, but does not, by itself, guarantee interoperability.

This Standard has been developed with an emphasis on diagnostic medical imaging as practiced in radiology and related disciplines; however, it is thought to be applicable to a wide range of image related information exchanged in a clinical environment.

Copyright National Electrical Manufacturers Association
Provided by IHS under license with NEMA
No reproduction or networking permitted without license from IHS

Not for Resale

NEMA PS 3.1 ENGL 2000 4702477 0525049 097

6 Overview of the Content of the DICOM Standard

6.1 DOCUMENT STRUCTURE

DICOM version 3.0 consists of the following nine parts:

PS 3.1:	Introduction and Overview (this document)
PS 3.2:	Conformance
PS 3.3:	Information Object Definitions
PS 3.4:	Service Class Specifications
PS 3.5:	Data Structure and Encoding
PS 3.6:	Data Dictionary
PS 3.7:	Message Exchange
PS 3.8:	Network Communication Support for Message Exchange
PS 3.9:	Point-to-Point Communication Support for Message Exchange

These parts of the Standard are related but independent documents. A brief description of Parts 2 through 9 is provided in this section.

6.2 PS 3.2: CONFORMANCE

PS 3.2 of the DICOM Standard defines principles that implementations claiming conformance to the Standard shall follow:

- Conformance requirements. PS 3.2 specifies the general requirements which must be met by any implementation claiming conformance. It references the conformance sections of other parts of the Standard.
- Conformance Statement. PS 3.2 defines the structure of a Conformance Statement. It specifies the information which must be present in a Conformance Statement. It references the Conformance Statement sections of other parts of the Standard.

PS 3.2 does not specify a testing/validation procedure to assess an implementation's conformance to the Standard.

Figure 6-1 depicts the construction process for a Conformance Statement. A Conformance Statement consists of three major parts:

- Set of Information Objects which is recognized by this implementation
- Set of Service Classes which this implementation supports
- Set of communications protocols which this implementation supports.

Copyright National Electrical Manufacturers Association
Provided by IHS under license with NEMA
No reproduction or networking permitted without license from IHS
- Offic al Standard -
NGL 2000 Not for Resale 5470247 0525050 809

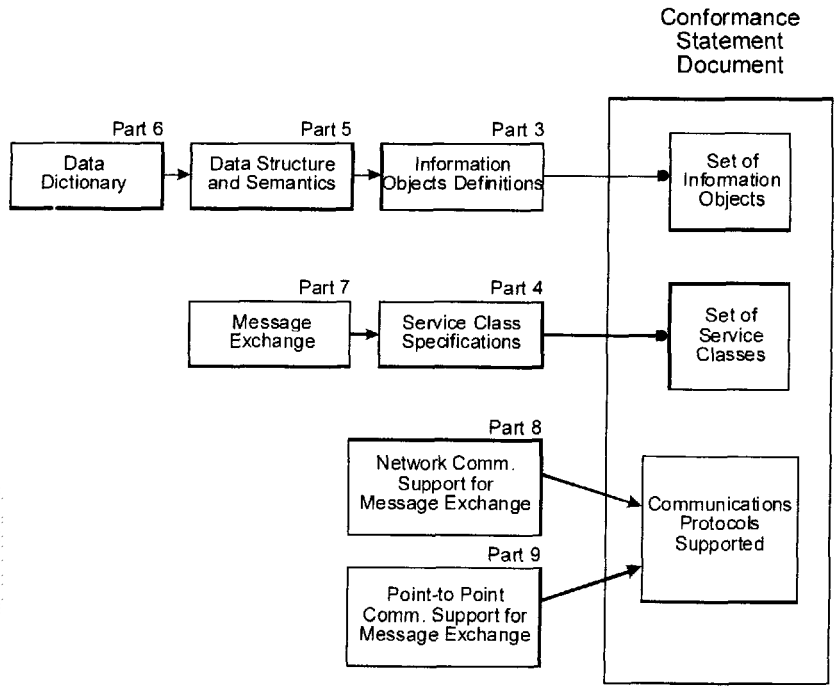

Figure 6-1
CONSTRUCTION PROCESS FOR A CONFORMANCE STATEMENT

6.3 PS 3.3: INFORMATION OBJECT DEFINITIONS

PS 3.3 of the DICOM Standard specifies a number of Information Object Classes which provide an abstract definition of real-world entities applicable to communication of digital medical images. Each Information Object Class definition consists of a description of its purpose and the Attributes which define it. An Information Object Class does not include the values for the Attributes which comprise its definition.

To facilitate future Standard growth and to maintain compatibility with previous versions of the Standard, two types of Information Object Classes are defined: normalized and composite.

Normalized Information Object Classes include only those Attributes inherent in the real-world entity represented. For example the study Information Object Class, which is defined as normalized, contains study date and study time Attributes because they are inherent in an actual study. Patient name, however, is not an Attribute of the study Information Object Class because it is inherent in the patient on which the study was performed and not the study itself.

Composite Information Object Classes may additionally include Attributes which are related to but not inherent in the real-world entity. For example, the Computed Tomography Image Information Object Class, which is defined as composite, contains both Attributes which are inherent in the image (e.g. image date)

Copyright National Electrical Manufacturers Association
Provided by IHS under license with NEMA
No reproduction or networking permitted without license from IHS
Not for Resale
PS 3.1-ENGL 2000 4470247 0525051 745

and Attributes which are related to but not inherent in the image (e.g. patient name). Composite Information Object Classes provide a structured framework for expressing the communication requirements of images which were defined in previous versions of the Standard.

To simplify the Information Object Class definitions, the Attributes of each Information Object Class are partitioned with similar Attributes being grouped together. These groupings of Attributes are specified as independent modules and may be reused by one or more Composite Information Object Classes.

To represent an occurrence of a real-world entity, an Information Object Instance is created, which includes values for the Attributes of the Information Object Class. The Attribute values of this Information Object Instance may change over time to accurately reflect the changing state of the entity which it represents. This is accomplished by performing different basic operations upon the Information Object Instance to render a specific set of services defined as a Service Class. These Service Classes are defined in PS 3.4 of the Standard.

PS 3.3 also is related to other parts of the DICOM Standard in that:

- PS 3.5, Data Structure and Semantics, defines the Data Set structure and encoding to convey DICOM Information Object Attributes
- PS 3.6, Data Dictionary, defines the semantics of DICOM Data Elements which convey the Information Object Attributes defined in PS 3.3.

6.4 PS 3.4: SERVICE CLASS SPECIFICATIONS

PS 3.4 of the DICOM Standard defines a number of Service Classes. A Service Class associates one or more Information Objects with one or more Commands to be performed upon these objects. Service Class Specifications state requirements for Command Elements and how resulting Commands are applied to Information Objects. Service Class Specifications state requirements for both providers and users of communications services.

PS 3.4 of the DICOM Standard defines the characteristics shared by all Service Classes, and how a Conformance Statement to an individual Service Class is structured. It contains a number of normative annexes which describe individual Service Classes in detail.

Examples of Service Classes include the following:

- Storage Service Class
- Query Service Class
- Retrieval Service Class
- Study Management Service Class.

PS 3.4 defines the operations performed upon the Information Objects defined in PS 3.3. PS 3.7 defines the Commands and protocols for using the Commands to accomplish the operations described in PS 3.4.

6.5 PS 3.5: DATA STRUCTURE AND SEMANTICS

PS 3.5 of the DICOM Standard specifies how DICOM Application Entities construct and encode the Data Set information resulting from the use of the Information Objects and Services Classes defined in Parts 3 and 4 of the DICOM Standard.

PS 3.5 addresses the encoding rules necessary to construct a Data Stream to be conveyed in a Message as specified in PS 3.7 of the DICOM Standard. This Data Stream is produced from the collection of Data Elements making up the Data Set. Several Data Sets may be referenced or folded in a compounded Data

Copyright National Electrical Manufacturers Association
Provided by IHS under license with NEMA
No reproduction or networking permitted without license from IHS

PS-NEMA PS 3-3 ENGL 2000 Not for Resale 6470247 0525052 681

Set. A compounded Data Set is used to transfer in "one package" the content of Information Objects, offering a folder capability.

PS 3.5 also defines the semantics of a number of generic functions that are common to many Information Objects.

6.6 PS 3.6: DATA DICTIONARY

PS 3.6 of the DICOM Standard is the centralized registry which defines the collection of all DICOM Data Elements available to represent information. For each Data Element, PS 3.6:

- Assigns it a unique tag, which consists of a group and element number
- Gives it a name
- Specifies its value characteristics (character string, integer, etc)
- Defines its semantics (i.e. how it is to be interpreted).

PS 3.6, in conjunction with PS 3.5, is used to construct Data Sets, and to represent Information Objects as Data Sets in conjunction with PS 3.3 and PS 3.5.

6.7 PS 3.7: MESSAGE EXCHANGE

PS 3.7 of the DICOM Standard specifies both the service and protocol used by an Application Entity in a medical imaging environment to exchange Messages over the communications support services defined in PS 3.8 or PS 3.9. A Message is composed of a Command Stream defined in PS 3.7 followed by an optional Data Stream as defined in PS 3.5.

This Part specifies the following:

- Rules to establish and terminate associations provided by the communications support specified in PS 3.8 or PS 3.9, and the impact on outstanding transactions
- Rules that govern the exchange of Command requests and responses
- Encoding rules necessary to construct Command Streams and Messages.

Additionally, PS 3.7 is related to other parts of the DICOM Standard in that:

- PS 3.3, Information Object Definitions, specifies the set of Information Object Classes to which the Commands defined in PS 3.7 may be applied
- PS 3.5, Data Structure and Semantics, addresses the encoding rules necessary to construct a Data Stream to be conveyed in a Message specified in PS 3.7 of the DICOM Standard
- PS 3.7, Message Exchange, defines the Commands and protocols for using the Commands to accomplish the operations described in PS 3.4.

6.8 PS 3.8: NETWORK COMMUNICATION SUPPORT FOR MESSAGE EXCHANGE

PS 3.8 of the DICOM Standard specifies the communication services and the upper layer protocols necessary to support, in a networked environment, communication between DICOM Application Entities as specified in PS 3.3, PS 3.4, PS 3.5, PS 3.6, and PS 3.7. These communication services and protocols ensure that communication between DICOM Application Entities is performed in an efficient and coordinated manner across the network.

The communication services specified in PS 3.8 are a proper subset of the services offered by the OSI Presentation Service (ISO 8822) and of the OSI Association Control Service Element (ACSE) (ISO 8649).

Copyright National Electrical Manufacturers Association
Provided by IHS under license with NEMA PS 3.1-ENGL 2000 Not for Resale 6470247 0525053 518
No reproduction or networking permitted without license from IHS

They are referred to as the Upper Layer Service, which allows peer Application Entities to establish associations, transfer messages and terminate associations.

This definition of the Upper Layer Service allows the use of a fully conformant stack of OSI protocols (Layers 1 through 6 plus ACSE) to achieve robust and efficient communication. It supports a large variety of international standards-based network technologies using a wide choice of physical networks such as ISO 8802-3 CSMA/CD (often referred to as Ethernet), FDDI, ISDN, X.25, dedicated digital circuits, and many other LAN and WAN network technologies.

In addition, this same Upper Layer Service can also be provided by the DICOM Upper Layer Protocol used in conjunction with TCP/IP transport protocols. Therefore, a broad range of existing networked environments can be used.

The definition of a Upper Layer Service common to both OSI and TCP/IP environments allows migration from a TCP/IP to an OSI environment without impacting DICOM Application Entities.

These communication protocols specified by PS 3.8 are general purpose communication protocols (OSI, TCP/IP) and not versions specific to the DICOM Standard. Figure 6-2 shows these two protocol stacks with the third (point-to-point) stack defined in PS 3.9 of the DICOM Standard.

Copyright National Electrical Manufacturers Association
Provided by IHS under license with NEMA
No reproduction or networking permitted without license from IHS

L 2000 Not for Resale 70247 0525054 454

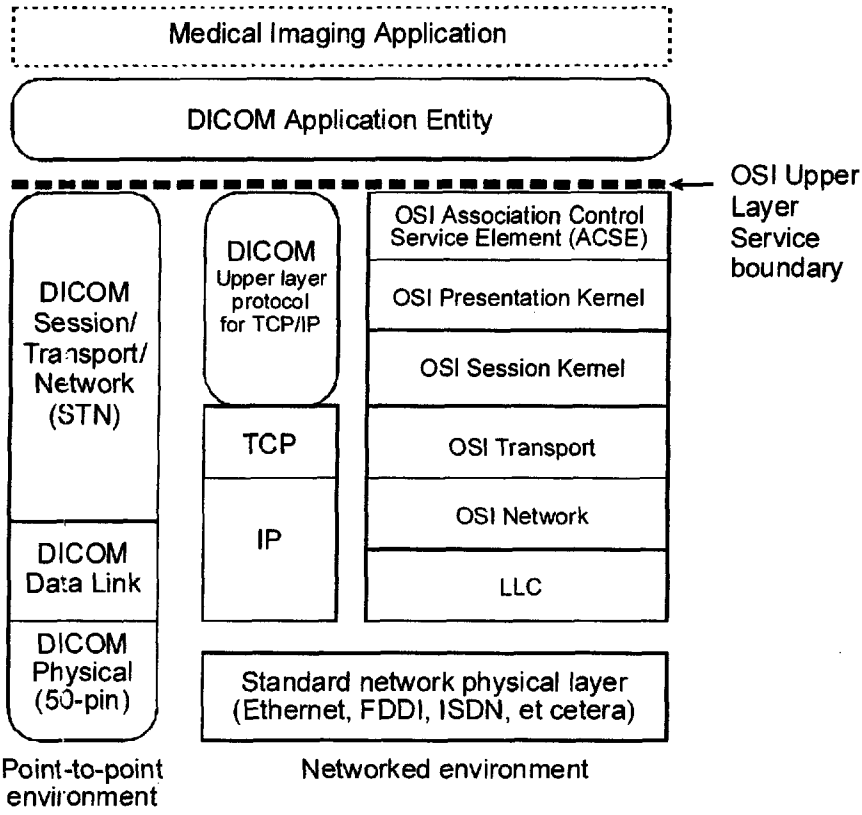

Note: The DICOM STN supports a subset of the OSI upper layer service

Figure 6-2
DICOM VERSION 3.0 PROTOCOL ARCHITECTURE

6.9 PS 3.9: POINT-TO-POINT COMMUNICATION SUPPORT FOR MESSAGE EXCHANGE

PS 3.9 of the DICOM Standard specifies the services and protocols used for point-to-point communications in a manner compatible with ACR-NEMA 2.0. It specifies a physical interface and signaling protocols. It defines the OSI-like Data link and Session/Transport/Network protocols and the services of the protocol stack to be used on this physical interface.

The specified Session/Transport/Network Layer Services and protocols support communication between DICOM Application Entities as specified in Parts 3, 4, 5, 6, and 7. These services are a subset of the Upper

Copyright National Electrical Manufacturers Association
Provided by IHS under license with NEMA
No reproduction or networking permitted without license from IHS

2000 Not for Resale 70247 0525055 390

Layer Services specified in PS 3.8 of the DICOM Standard. This subset property permits the interconnection of a device with a point-to-point interface to a fully networked communication environment supported by OSI and TCP/IP. Such an interconnection requires an intervening Network Interface Unit (NIU). Figure 6-3 presents how a point-to-point interface and a networked environment coexist.

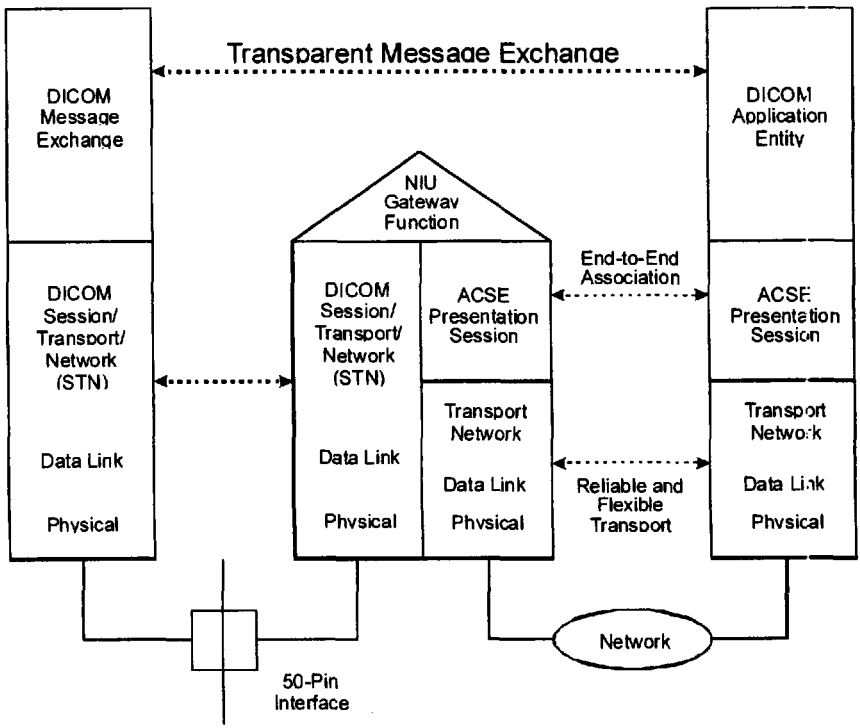

Figure 6-3
USING POINT-TO-POINT IN A NETWORK ENVIRONMENT

Copyright National Electrical Manufacturers Association
Provided by IHS under license with NEMA
No reproduction or networking permitted without license from IHS

Not for Resale

7 Relationships of parts of the standard

Figure 7-1 depicts the relationships of the various parts of the Standard which have been described in the preceding paragraphs.

The following relationships exist between parts of the Standard:

PS 3.1: Introduction and Overview describes the overall structure of the Standard.

PS 3.2: Conformance specifies the general requirements which must be met by implementations claiming conformance and contents of a Conformance Statement.

PS 3.3: Information Object Definitions specifies the structure and attributes of objects which are operated upon by Service Classes (PS 3.4). These objects include images, studies, and patients.

PS 3.4: Service Class Specifications defines the operations that can be performed on instances of Information Objects (PS 3.3) to provide a specific service. These services include image storage, retrieval, and printing.

PS 3.5: Data Structure and Semantics specifies the encoding of the data content of messages which are exchanged to accomplish the operations used by the Service Classes (PS 3.4).

PS 3.6: Data Dictionary defines the individual information Attributes that represent the data content (PS 3.5) of instances of Information Objects.

PS 3.7: Message Exchange specifies the operations and protocol used to exchange messages. These operations are used to accomplish the services defined by the Service Classes (PS 3.4).

PS 3.8: Network Communication Support for Message Exchange defines the services and protocols used to exchange messages (PS 3.7) directly on OSI and TCP/IP networks.

PS 3.9: Point-to-Point Communication Support for Message Exchange defines the services and protocols used to exchange messages (PS 3.7) on the DICOM 50-pin interface.

- Official Standard -
Copyright National Electrical Manufacturers Association
Provided by IHS under license with NEMA
No reproduction or networking permitted without license from IHS
NGL 2000 Not for Resale 1470247 0525057 163

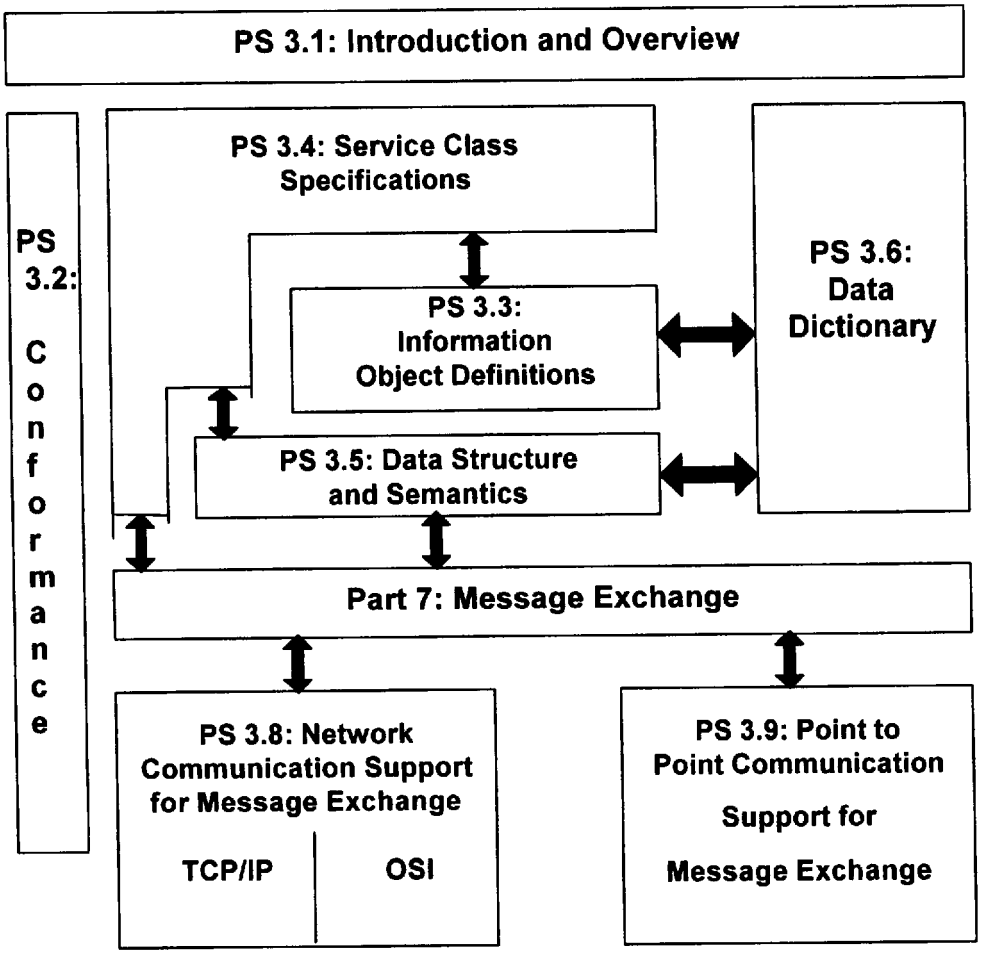

Figure 7-1
RELATIONSHIPS OF PARTS 1-9 OF THE DICOM STANDARD

Copyright National Electrical Manufacturers Association
Provided by IHS under license with NEMA
No reproduction or networking permitted without license from IHS

Not for Resale



NATIONAL ELECTRICAL MANUFACTURERS ASSOCIATION
1300 NORTH 17TH STREET, SUITE 1847, ROSSLYN, VIRGINIA 22209

Copyright National Electrical Manufacturers Association
Provided by IHS under license with NEMA
No reproduction or networking permitted without license from IHS
Not for Resale