PS 2-89 6470247 0008487 7

0-60-47

ACR/NEMA STANDARDS PUBLICATION PS 2

nema

Data Compression Standard

NEMA

NATIONAL ELECTRICAL MANUFACTURERS ASSOCIATION ■ 2101 L STREET, N.W., WASHINGTON, D.C. 20037

Copyright National Electrical Manufacturers Association
Provided by IHS under license with NEMA
No reproduction or networking permitted without license from IHS

Not for Resale

PS 2-89 6470247 0008488 9

ACR/NEMA PS 2-1989

PS 2

DATA COMPRESSION STANDARD

Approved by:
The American College of Radiology

Published by:

National Electrical Manufacturers Association
2101 L Street, N.W.
Washington, DC 20037

© 1989 by National Electrical Manufacturers Association

Copyright National Electrical Manufacturers Association
Provided by IHS under license with NEMA
No reproduction or networking permitted without license from IHS
Not for Resale

TABLE OF CONTENTS

		Page
	FOREWORD	i
	SCOPE	ii
	HISTORY	iii
	PURPOSE	iii
	RATIONALE	iii
	RELATION TO THE ACR/NEMA INTERFACE STANDARD	iv
	APPLICABILITY	iv
	VALIDATION	iv
	EVOLUTION	iv
	OVERVIEW	iv
Section 1	REFERENCED STANDARDS AND DEFINITIONS	
	Referenced Standards	1
	Definitions	1
Section 2	TECHNICAL DESCRIPTION	
	Overview	3
	Image Conversion Techniques	3
	Lossless Differential Pulse Code Modulation	3
	Discrete Cosine Transform	5
	S-Transform and Pyramid Transform	6
	Coding Schemes	11
	Huffman Coding	11
	Run Length Encoding	11
	Lempel-Ziv Coding	11
	Perimeter Encoding	12
	Code Combinations	12
Section 3	DESCRIPTION OF DATA ELEMENTS	
	Introduction	13
	Organization of Data Dictionary	13
	Compression Type	13
	Compression Code	14
	Labeling	14
	Pointers	14
	Compression Sequence	14
	Repeat Interval	14
	Blocking	15
	DPCM Compression Procedures	15
	Discrete Cosine Transform Compression Procedures	17
	Data Block Contents	17
	Coding	17
	S-Transform and Pyramid Transform Compression Procedures	19
	Coding	19
	Huffman Coding	19
	Shift Coding	19
	Escape Code	23
	Run Length Coding	23
	Lempel-Ziv Coding	23
	Perimeter Coding	23
	Message and Group Lengths	23
	Compression of Overlays	24

Copyright National Electrical Manufacturers Association
Provided by IHS under license with NEMA
No reproduction or networking permitted without license from IHS
Not for Resale

		Page
Section 4	COMMAND STRUCTURE	26
Section 5	EXAMPLES OF SEVERAL TYPES OF COMPRESSION	
	DPCM	27
	Escape Code and Huffman Table	27
	Repeat Interval	28
	Huffman Plus Shift Codes	29
	Different Huffman table and Multiple Shifts	30
	Implied Compression	31
	Huffman and Run Length Encoding	31
	DPCM-Huffman with Realistic Images	31
	Examples of DCT Compressed Image Data	32
	Example of Zonal Mapping	33
	Example of Adaptive Mapping and Huffman Coding	34
	Examples of S-Transformed Data Sets	35
	Numerical Example	35
	Example for Huffman-coding of a Medical Image after S-Transformation	40
	Example for Lempel-Ziv Encoding	43
	Example of Perimeter Encoding	45
Section 6	ABBREVIATED DATA DICTIONARY	46
Appendix	LITERATURE REFERENCES	52

Copyright National Electrical Manufacturers Association
Provided by IHS under license with NEMA
No reproduction or networking permitted without license from IHS
Not for Resale

Foreword

The Committee of the American College of Radiology (ACR) and the National Electrical Manufacturers Association (NEMA) that developed the ACR/NEMA Standard 300 formed a working group with the express purpose of enabling the use of existing and proposed methods of image compression. Because the storage requirements of typical "uncompressed" digital images are very large, compression methods are desirable for improving the performance and economy of medical picture archiving and communications systems (PACS). Because the number of possible compression methods and variations is enormous, standards are necessary to ensure compatible image communication. This group was comprised of members familiar with the field of medical imaging and compression/decompression techniques.

The objectives of the working group were twofold:

1. Identify the compression methods likely to be used in medical imaging for inclusion in the Standard.

2. For each method, specify the data elements and their ordering sufficiently that, based only on information from the Standard, it is feasible to design a decoder that will properly reconstruct the image from the data sent by any encoder conforming to the Standard.

In the preparation of this Standards Publication, input of users and other interested parties has been sought and evaluated. Inquiries, comments, and proposed or recommended revisions should be submitted to the Diagnostic Imaging and Therapy Systems Division by contacting:

Manager, Engineering Department
National Electrical Manufacturers Association
2101 L Street, N.W.
Washington, D.C. 20037

Copyright National Electrical Manufacturers Association
Provided by IHS under license with NEMA
No reproduction or networking permitted without license from IHS
Not for Resale

Scope

This data compression Standard is intended to be used in conjunction with ACR/NEMA Standards Publication No. 300, *Digital Imaging and Communications*. ACR/NEMA 300 specifies the hardware interface, a minimum set of software commands, and a consistent set of data formats for communication across an interface between an imaging device and a network interface unit or another imaging device. Any compression scheme accommodated is therefore for use across such an interface. This Standards Publication specifies the way in which header data can permit a variety of data compression schemes, either reversible (also called bit-preserving or lossless) or irreversible. The header data is sufficient to enable an appropriate end instrument to re-expand the compressed image.

THIS STANDARDS PUBLICATION IS NOT INTENDED TO REQUIRE OR FAVOR THE USE OF ANY PARTICULAR COMPRESSION SCHEME, NOR IN FACT TO REQUIRE THE USE OF DATA COMPRESSION; THE MINIMUM REQUIREMENT FOR COMMUNICATION AS STATED IN ACR/NEMA 300 IS THE TRANSMISSION OF UNCOMPRESSED IMAGES. This Standards Publication is not exhaustive, but rather is intended to cover those techniques that are expected to be in use in the present and near future. Should substantially different techniques become common, it is anticipated that they can be included in future revisions of the Standards Publication.

Copyright National Electrical Manufacturers Association
Provided by IHS under license with NEMA
No reproduction or networking permitted without license from IHS
Not for Resale

History

A joint committee of the ACR and NEMA developed a digital imaging and communications interface standard (the ACR/NEMA 300). Recognizing that data compression would require additional knowledge and analysis, the committee established a working group to examine the issues of data compression within the framework of the interface standard.

Because forms of compression have been utilized in products serving different modalities, the formation of this working group resulted in a spectrum of responses from industry and from the user community. While a majority were supportive of this effort, a few expressed the opinion that compression should not be addressed by a standard. Even within the supportive responses, a wide variety of approaches have been suggested, varying from the production of a numbered "compendium" of algorithms to the identification of a single algorithm as part of this compression standard.

After study, the working group concluded that:

Not to address data compression would be a disservice to facilities that now use data compression or plan to do so;

Selection of a single algorithm would be unrealistically restrictive; and

A variety of compression algorithms can be accommodated within a single standard.

Purpose

This Standards Publication is intended to facilitate image communication in health care facilities that are now using or desire to use image data compression in order to provide fast image transfer or to improve the capacity of their network or image storage facilities. It is intended to accommodate many existing data compression algorithms that have been published or are in use, to allow extensions to those algorithms for investigative purposes and future use, and to permit the use of proprietary compression algorithms.

This standard is not intended to enable a receiver to exactly replicate the encoding process used by the transmitter. Rather, only sufficient information to properly decode the compression information is transmitted.

Rationale

Forms of data compression, such as elimination of the featureless region around a reconstruction circle in CT, have been used in medical imaging since the mid 1970s. Reversible (lossless) algorithms to compress the image data by factors of 1.5:1 to 3:1 were first used later in that decade. Irreversible algorithms, which have given much larger compression factors when applied to other imaging applications, were investigated for application to medical images. Concern had been expressed that clinically significant information might be lost by the use of these techniques. However, because these techniques offer compression ratios greater than lossless techniques, their potential for speeding communications and reducing the cost of image storage is significant. The importance of both reversible and irreversible compression is expected to increase rapidly as PACS and digital data archives are installed.

Copyright National Electrical Manufacturers Association
Provided by IHS under license with NEMA
No reproduction or networking permitted without license from IHS
Not for Resale

Relation to the ACR/NEMA Interface Standard

This standards publication is not intended to stand alone or to be complete within itself. Rather, it builds on the framework of ACR/NEMA 300 and cannot be understood except in that context.

Applicability

The ability to compress and decompress an image is an option to ACR/NEMA 300 and is not required for compatibility to that Standard. Imaging devices exchanging compressed images would negotiate using the procedures outlined in that document. Any imaging device able to send a compressed image must be able to send an uncompressed version if it is the originator of the image, in order for the imaging device to remain compatible with ACR/NEMA 300. A non-originator, such as an archive, is allowed to retransmit images in the form in which it received them. The ability to decompress is not required of any device.

Validation

A working group of the ACR/NEMA Committee established to address validation of ACR/NEMA 300 will have oversight for this compression Standard as well. Practical validation will occur as this Standard is put to use. However, validation of the claimed effectiveness (compression ratios) or accuracy (error rates) of the compression algorithms themselves is not within the scope of this Standards Publication, nor of the ACR/NEMA Committee.

Evolution

It is anticipated that this Standard will evolve and that periodic enhancements should be forthcoming from the member organizations and from users. A continuing requirement of these updates is compatibility with previous versions of this Standard and with the interface standard. ACR and NEMA will continue to support the activities of the joint committee and the relevant working groups to clarify and update this Standard.

Overview

This Standards Publication is organized in several sections:

Section 1 provides referenced standards and definitions;

Section 2 is a technical description of several types of compression;

Section 3 is a data dictionary containing the specific header definitions required to fit data compression into the ACR/NEMA interface standard;

Section 4 contains the additional status codes needed for the command structure;

Section 5 provides examples covering several types of compression; and

Section 6 contains an abbreviated summary of the data dictionary.

Copyright National Electrical Manufacturers Association
Provided by IHS under license with NEMA
No reproduction or networking permitted without license from IHS
Not for Resale

ACR/NEMA DATA COMPRESSION STANDARD

Section 1
REFERENCED STANDARDS AND DEFINITIONS

1.1 REFERENCED STANDARDS

The following publication is adopted in whole by reference in this Standards Publication. The mailing address of the referenced organization is also provided.

National Electrical Manufacturers Association
2101 L Street, N.W.
Washington, DC 20037

ACR/NEMA 300-1988 *Digital Imaging and Communications*

1.2 DEFINITIONS

Terms defined in ACR/NEMA 300 are included in this standard. The following are additional definitions specific to this Standard:

ALGORITHM
A sequence of operations that will modify data; for this standard, operations to compress or re-expand an image.

BIT-PRESERVING
A data compression technique for which the encoding/decoding process preserves every bit of the original image.

BLOCK
A rectangular region of an image treated separately for purposes of data compression.

COMPRESS
To reduce the amount of data comprising an image.

COMPRESSION RATIO
Number of bits in the original image divided by the number of bits in the compressed image. The ratio may be calculated with or without overhead.

DCT
Discrete cosine transform.

DECOMPRESS
To re-expand: To decode and back-convert the compressed image giving a viewable result comparable to the original image.

DEFINED
For the purpose of this standard, numerical or algorithmic data, required to re-expand an image, that is transmitted from the data source with the image; opposed to "implied."

DIFFERENCE IMAGE
The result of subtracting the original image from the re-expanded resulting image on a pixel-by-pixel basis.

DISCRETE
Referring to sampled rather than continuous data or transforms.

DPCM
Differential pulse code modulation.

FOURIER TRANSFORM
A type of transform using sines and cosines as basis functions.

HIERARCHICAL COMPRESSION
Techniques where a portion of the data representing the compressed image can be decompressed to yield a viewable image with fewer pixels than the original image.

HUFFMAN CODE
A coding method based on a variable length code table constructed from the statistics of the image.

IMPLIED
For the purpose of this standard, numerical or algorithmic data, required to re-expand an image, which are presumed to be available at a data sink; it may be called from a source by name if a selection must be made from several different sets of data. See "defined."

Copyright National Electrical Manufacturers Association
Provided by IHS under license with NEMA
No reproduction or networking permitted without license from IHS
Not for Resale

INFORMATION PRESERVING
Compression where the resulting image retains all of the significant information of the original image; pixel values in the difference image may be non-zero. This standard does not define "significant information."

IRREVERSIBLE COMPRESSION
Compression algorithms that are not bit-preserving.

KARHUNEN-LOEVE
A type of transform that can be shown to be more efficient in certain ways than any other.

LEMPEL-ZIV
The Lempel-Ziv coding scheme converts a variable-length string of pixels into fixed-length codes. The Lempel-Ziv code is self-generating in that it creates the code table during both the compression and decompression process. Lempel-Ziv coding does not require the transmission of a code table.

LOSSY COMPRESSION
See "irreversible compression."

ORIGINAL IMAGE
The original image data, prior to compression.

OVERHEAD
The information that must be transmitted with the coded image to enable the receiver to decode it. The additional information may consist, for example, of the predictor coefficients employed in a DPCM process or the Huffman or shift tables used for coding image data.

PREDICTOR
A function, based on weighted values of known pixels, that predicts the value of an unknown pixel.

RE-EXPANDED IMAGE
The result of applying a suitable algorithm to a compressed image. See "decompress."

REVERSIBLE
Bit-preserving.

RUN LENGTH ENCODING
Use of a code that represents the length of a sequence of pixels over which no change occurs.

SHIFT CODE
A code that shifts less common data values into the range defined by a code table.

S-TRANSFORM
A particular hierarchical image conversion scheme.

TRANSFORM
A representation of the data based on a mathematical transformation, such as cosine, Fourier, Karhunen-Loeve, etc.

TRUNCATION
Limiting the number of bits used to characterize a value by deleting less significant bits.

ZONAL MAP
A map of the prescribed number of bits for each transform coefficient within a block; for example, DCT coefficients.

Copyright National Electrical Manufacturers Association
Provided by IHS under license with NEMA
No reproduction or networking permitted without license from IHS
Not for Resale

Section 2
TECHNICAL DESCRIPTION

2.0 OVERVIEW

This section presents a brief technical background on data compression. The structure of ACR/NEMA 300 potentially allows the use of many data compression techniques. This Standard describes the extension of that format for several of the most commonly employed data compression techniques that are described in this overview.

Data compression techniques often consist of two stages. In a first operation, the image data are converted to a representation that is more amenable to bit-saving coding methods than the original. In general, such operations exploit redundancies in an image so that efficient coding techniques can be employed (e.g., statistical coding). In the simplest case, the first operation determines the difference between adjacent pixels; if the pixels are correlated, on average, the differences will be smaller than the original pixels and certain differences will occur more frequently than others. Thus, a bit-saving coding scheme can then be applied. In other cases, transforms of the image are created that, for instance, reveal that the higher spatial frequencies occur with small amplitudes and thus can be represented by fewer bits, or that the transform spectrum is concentrated in certain frequency bands, so that fewer coefficients (though perhaps in discontinuous order) may be needed for representing the frequency space.

In a second operation, quantization and coding schemes are applied to the representation of the image data formed by the first operation.

Correspondingly, this section consists of two subsections. In 2.1, three methods of image conversion are described: differential pulse code modulation, discrete cosine transform, and S and Pyramid transforms. In 2.2 three coding techniques for the converted image data are presented: Huffman, Lempel-Ziv, and run length encoding.

Authorized Engineering Information 3-1-1989.

2.1 IMAGE CONVERSION TECHNIQUES

2.1.1 Lossless Differential Pulse Code Modulation

Differential pulse code modulation, sometimes referred to as predictive coding, is the representation of an image by the difference between the actual value of the pixels and a predicted value based on preceding pixel values [1-3].*

Authorized Engineering Information 3-1-1989.

The digitized image is represented by a two-dimensional array of pixels with values P{i,j}, where i and j denote the ith row and jth column, respectively. In predictive coding, we expect the value P{i,j} to be closely related to the values of its neighboring pixels, P{i,j-1}, P{i-1,j-1}, P{i-1,j}, P{i-1,j+1}, etc. It is therefore possible to predict P{i,j} with some degree of success from the values of the neighboring pixels. In the simplest case that shall be considered here, the predictor is a linear function of the neighboring pixels:

$$P'_{i,j} = \frac{\sum_{\substack{K=-m+1 \\ L=-\frac{n-1}{2}}}^{\substack{K=0 \\ L=\frac{n-1}{2}}} a_{K,L} \cdot P_{i+K,j+L}}{\sum_{\substack{K=-m+1 \\ L=-\frac{n-1}{2}}}^{\substack{K=0 \\ L=\frac{n-1}{2}}} a_{K,L}} \qquad (1)$$

where n must be odd and greater than or equal to 3.

NEMA Standard 3-1-1989.

a{K,L} are the predictor coefficients. For causality reasons, the set of m x n pixels around P{i,j} is restricted to those that have been scanned prior to the pixel currently being predicted (Figure 2-1). All m x n predictor coefficients are sent; all coefficients associated with pixels that have not yet been sent must be set to zero. All pixels outside the image boundary that are needed for the prediction are assumed to be zero. Output of a DPCM is the integer error

$$E_{i,j} = P_{i,j} - P'_{i,j} \qquad (2)$$

which can then be coded by one of several schemes defined in 2.2.

Two simple cases are obvious. If m=1, n=3, a{0,−1}=1, a{0,0}=0, and a{0,1}=0, each pixel is predicted by the preceding pixel in the same row. If m=2, n=3, and a{−1,−1}=1, a{−1,0}=1, a{−1,1}=0, a{0,−1}=1, a{0,0}=0, and a{0,1}=0, then the predicted value is the average of the previous nearest

* Numerical values in brackets refer to reference in Appendix A.

Copyright National Electrical Manufacturers Association
Provided by IHS under license with NEMA
No reproduction or networking permitted without license from IHS
Not for Resale

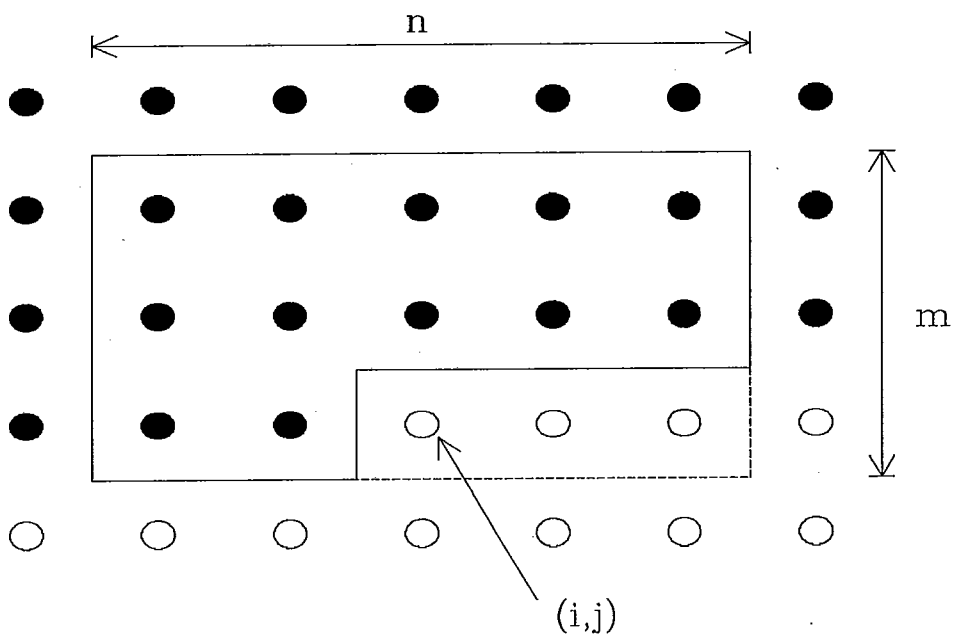

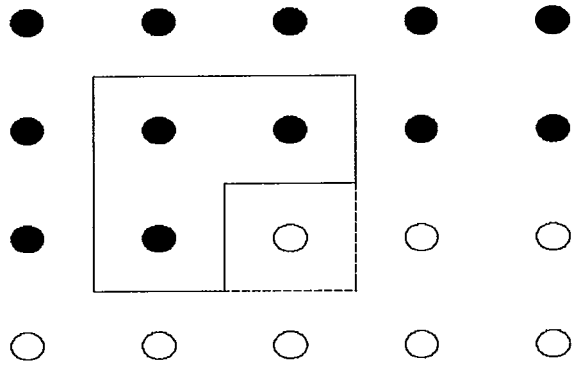

3rd Order
Predictor

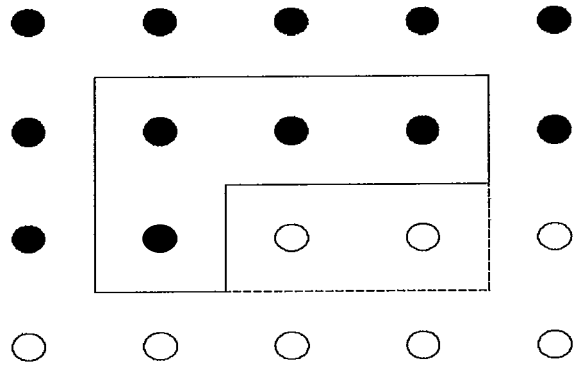

4th Order
Predictor

Figure 2-1
PIXELS THAT ARE USED IN DPCM

Copyright National Electrical Manufacturers Association
Provided by IHS under license with NEMA
No reproduction or networking permitted without license from IHS

Not for Resale

neighbors (third order predictor). A fourth order predictor makes use of pixels, P{i-1,j-1}, P{i-1,j}, P{i-1,j+1}, and P{i,j-1} (See Figure 2-1).

The division by the sum of predictor coefficients shown in equation 1 normalizes the predicted value P'{i,j}. P'{i,j} is represented by an integer number obtained by truncation, if necessary. Any truncation error is included in the prediction error and, therefore, does not affect the reversibility of the coding process.

Authorized Engineering Information 3-1-1989.

In this illustration of DPCM, the prediction begins anew at the left side of every row i. Pixels outside of the boundary are assumed to be zero.

If m = 0, the array is considered one dimensional, with the left pixel of the second row following the right pixel of the first row.

NEMA Standard 3-1-1989.

The difference between the decompressed and the original image can reveal whether the DPCM and coding process were indeed loss free.

A practical example of DPCM with Huffman coding is presented in Section 5. However, the encoding of the prediction error according to Lempel-Ziv is also part of this Standard.

Authorized Engineering Information 3-1-1989.

2.1.2 Discrete Cosine Transform

Discrete cosine transform (DCT) is one member of the class of unitary sinusoidal transforms, which themselves are members of the general class of linear transformations. The object of a transform is to represent the relatively highly correlated image data by a compact, uncorrelated data field while preserving the information of the original image. Although the Karhunen-Loeve Transform (KLT) would generate the least correlated data field, there exists no fast algorithm for its implementation. The family of unitary sinusoidal transforms is often used for image compression, since their performance approaches that of the KLT [5]. Fourier, sine, and cosine transforms are examples of this family. The cosine transform is generally chosen over the Fourier transform, since it involves only real (rather than complex) arithmetic, generally better approximates the KLT than does the Fourier transform [6], and a fast algorithm exists for it [7].

All unitary sinusoidal transforms are linear and fully reversible. In most implementations, irreversibility arises due to finite precision arithmetic, rounding errors, and quantization errors. Since DCT is separable, an n-dimensional DCT can be computed by sequential one-dimensional transforms.

As already stated in the Overview, a transform like DCT does no compression in and of itself. The compression occurs in the quantization and coding processes, where transform coefficients may be approximated by a coarser digitization resolution and very small coefficients representing little information in the original image may be discarded. The quantization and coding details need not be made public; the receiver (and decoder) of a DCT coded image need only have sufficient information to decode the image unambiguously.

Authorized Engineering Information 3-1-1989.

Generally, DCT is done on a block basis with square blocks whose dimensions N×N are powers of 2. The transformed block is given by:

$$F_{u,v} = \frac{1}{B} \cdot \left(\frac{2}{N}\right)^2 \cdot C_u \cdot C_v \cdot \sum_{\substack{i=0 \\ j=0}}^{\substack{i=N-1 \\ j=N-1}} P_{i,j} \cos\left(\frac{[2i+1] \cdot u}{2N}\right) \cos\left(\frac{[2j+1] \cdot v}{2N}\right) \qquad (3)$$

with

$$C_u = \frac{1}{\sqrt{2}} \quad \text{for } u = 0, \text{ but } = 1 \text{ otherwise, and}$$

$$C_v = \frac{1}{\sqrt{2}} \quad \text{for } v = 0, \text{ but } = 1 \text{ otherwise.}$$

The DCT transmitter of an image shall block transform and encode the image such that the receiver, after decoding the transmitted coefficients, can perform a two-dimensional inverse DCT to reconstruct the block by:

$$P''_{i,j} = \mathrm{INT}\left(B \cdot \sum_{\substack{u=0 \\ v=0}}^{\substack{u=N-1 \\ v=N-1}} F_{u,v} \cdot C_u \cdot C_v \cos\left(\frac{[2i+1]u}{2N}\right) \cos\left(\frac{[2j+1]v}{2N}\right) + 0.5\right) \qquad (4)$$

where INT is the largest integer function.

NEMA Standard 3-1-1989.

Typically, the F{u,v} are scaled by a normalization factor, B, as part of the quantization process that limits the precision and alters the dynamic range.

Of the many coding methods possible, this Standard enables the use of the following:

a. The transmitter Huffman or Lempel-Ziv codes the scaled transform coefficients. The code table is either block dependent or block independent. The normalization factor is block dependent.
b. The transmitter performs a block-by-block zonal bit allocation, transmitting a prescribed number of bits for each coefficient. The zonal map is either fixed (block independent) or enumerated (block dependent).
c. The transmitter employs an adaptive threshold coding [8] to minimize the number of transmitted bits. The receiver must be told which coefficients

Copyright National Electrical Manufacturers Association
Provided by IHS under license with NEMA
No reproduction or networking permitted without license from IHS
Not for Resale

are being transmitted for each block, as well as any normalization information. It is quite possible that those transmitted coefficients are Huffman coded, requiring the transmission of a code table, presumably invariant with the data.

Authorized Engineering Information 3-1-1989.

The general coding system is illustrated in Figure 2-2. Examples of a DCT-coded image with enumerated zonal bit allocation and normalization, as well as with adaptive mapping and enumerated Huffman coding, are shown in Section 5.

Authorized Engineering Information 3-1-1989.

2.1.3 S-Transform and Pyramid Transform

The S-transform [9-13] and the Pyramid transform [14] are linear transformations with non-sinusoidal base functions. The names were derived from basic features common to both transform operations, that of successive sampling and of decomposing an image into a pyramidal set of pictures where each successive picture is represented by a pixel matrix of half the size in each direction of the preceding picture. The description in this section does not explicitly use S-functions, which are defined in the references.

Authorized Engineering Information 3-1-1989.

The S and the Pyramid transforms decompose an image stepwise into a coarse picture and an ordered set of matrices that contain detailed information on different levels of spatial resolution. In each step, the transforms produce sum and vertical, horizontal, and diagonal difference coefficients of every 2×2 pixel ensemble in the image (See Figure 2-3). The difference coefficients are quantized, coded, and stored. The first matrix of sum coefficients represents an image with half the original resolution. In subsequent transformation steps, the transforms are successively applied to each set of resulting sum coefficients. In the final transformation step, the sum coefficients are also stored.

NEMA Standard 3-1-1989.

The S-transform or the Pyramid transform of an image is a hierarchical coding process: at each level of the inverse transform, a viewable image is created. The inverse transform of the image begins with accessing the last sum coefficients (basic image) that represent a coarse, though viewable, picture of the original. For example, if an image had been subjected to three transformation steps and if the display device has the same number of pixels as the original image, then in the display of the last sum coefficients, every pixel might be replicated 8×8 times. In subsequent inverse transform steps, increasingly finer details are added to the image until the original is fully restored.

Typically, the difference coefficients are not as strongly correlated as the original pixels or sum coefficients. The histogram distribution of their values is usually peaked; the majority of them fall within a narrow section of the distribution. Hence, statistical coding techniques can be successfully applied to them.

Authorized Engineering Information 3-1-1989.

The original image matrix may consist of

$$H \cdot V = (h \cdot 2^r) \cdot (v \cdot 2^r)$$

pixels, where r is the number of successive sampling or transformation steps possible with the given image, and h and v are integer numbers. The elements of the original matrix shall be labeled as

. . . . . .
. . . . . $P_{i,j}$ $P_{i,j+1}$. . . . . .
. . . . . $P_{i+1,j}$ $P_{i+1,j+1}$.. . . . . .
. . . . . .

When forming coefficients in the course of the S-transform according to the following equations, i and j assume odd values only. The coefficients of the first transformation step are defined as follows:

$$SS1_{m,n} = \tfrac{1}{4}(P_{i,j} + P_{i,j+1} + P_{i+1,j} + P_{i+1,j+1}) \quad (5)$$

$$SDV1_{m,n} = \tfrac{1}{2}(P_{i,j} + P_{i,j+1} - P_{i+1,j} - P_{i+1,j+1}) \quad (6)$$

$$SDH1_{m,n} = \tfrac{1}{2}(P_{i,j} - P_{i,j+1} + P_{i+1,j} - P_{i+1,j+1}) \quad (7)$$

$$SDD1_{m,n} = P_{i,j} - P_{i,j+1} - P_{i+1,j} + P_{i+1,j+1} \quad (8)$$

$m = [i+1]/2$ and $n = [j+1]/2$. SS, SDV, SDH, and SDD are the sum, vertical difference, horizontal difference, and diagonal difference coefficients, respectively. Higher-order coefficients are computed correspondingly. Figure 2-4a explains how the needed digitization accuracy is obtained.

For back-transformation, the following equations apply:

$$P_{i,j} = \tfrac{1}{4}(4SS1_{m,n} + 2SDV1_{m,n} + 2SDH1_{m,n} + SDD1_{m,n}) \quad (9)$$

$$P_{i+1,j} = \tfrac{1}{4}(4SS1_{m,n} + 2SDV1_{m,n} - 2SDH1_{m,n} - SDD1_{m,n}) \quad (10)$$

$$P_{i,j+1} = \tfrac{1}{4}(4SS1_{m,n} - 2SDV1_{m,n} + 2SDH1_{m,n} - SDD1_{m,n}) \quad (11)$$

$$P_{i+1,j+1} = \tfrac{1}{4}(4SS1_{m,n} - 2SDV_{m,n} - 2SDH1_{m,n} + SDD1_{m,n}) \quad (12)$$

Figure 2-4b shows the recovery of the least significant bits.

NEMA Standard 3-1-1989.

With the above equations (5) through (12), rounding errors are completely avoided. If the original word length is W, all SS coefficients are limited to W bits. SDV and SDH are represented by W+1 bits and SDD by W+2 bits independent of the transform step. The apparently lost least significant bits can be recovered in the inverse transform operation by making use of correlations between the least significant bits of SDV, SDD and

Copyright National Electrical Manufacturers Association
Provided by IHS under license with NEMA
No reproduction or networking permitted without license from IHS
Not for Resale

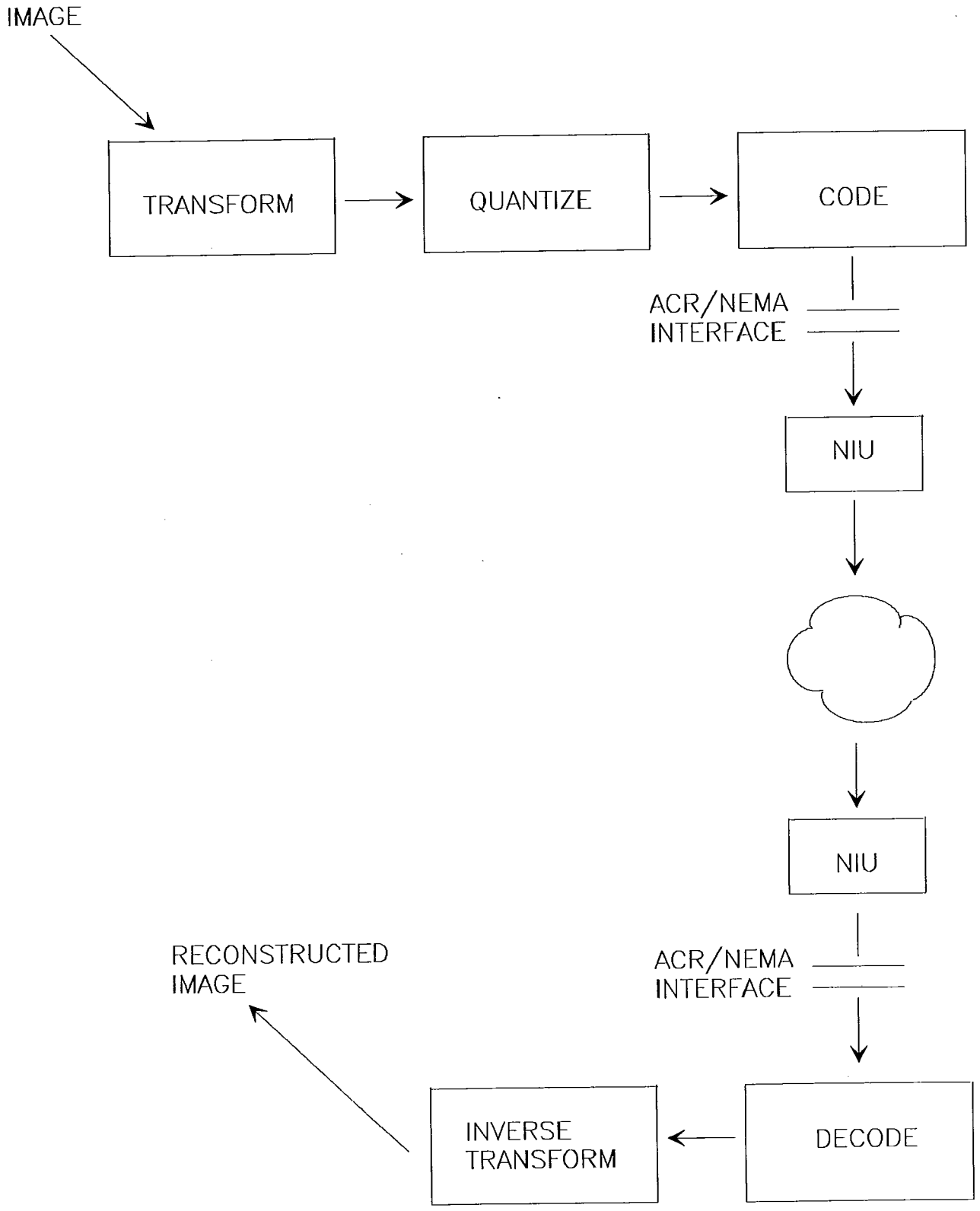

Figure 2-2
IMAGE TRANSFORM CODING SYSTEM

Copyright National Electrical Manufacturers Association
Provided by IHS under license with NEMA
No reproduction or networking permitted without license from IHS

Not for Resale

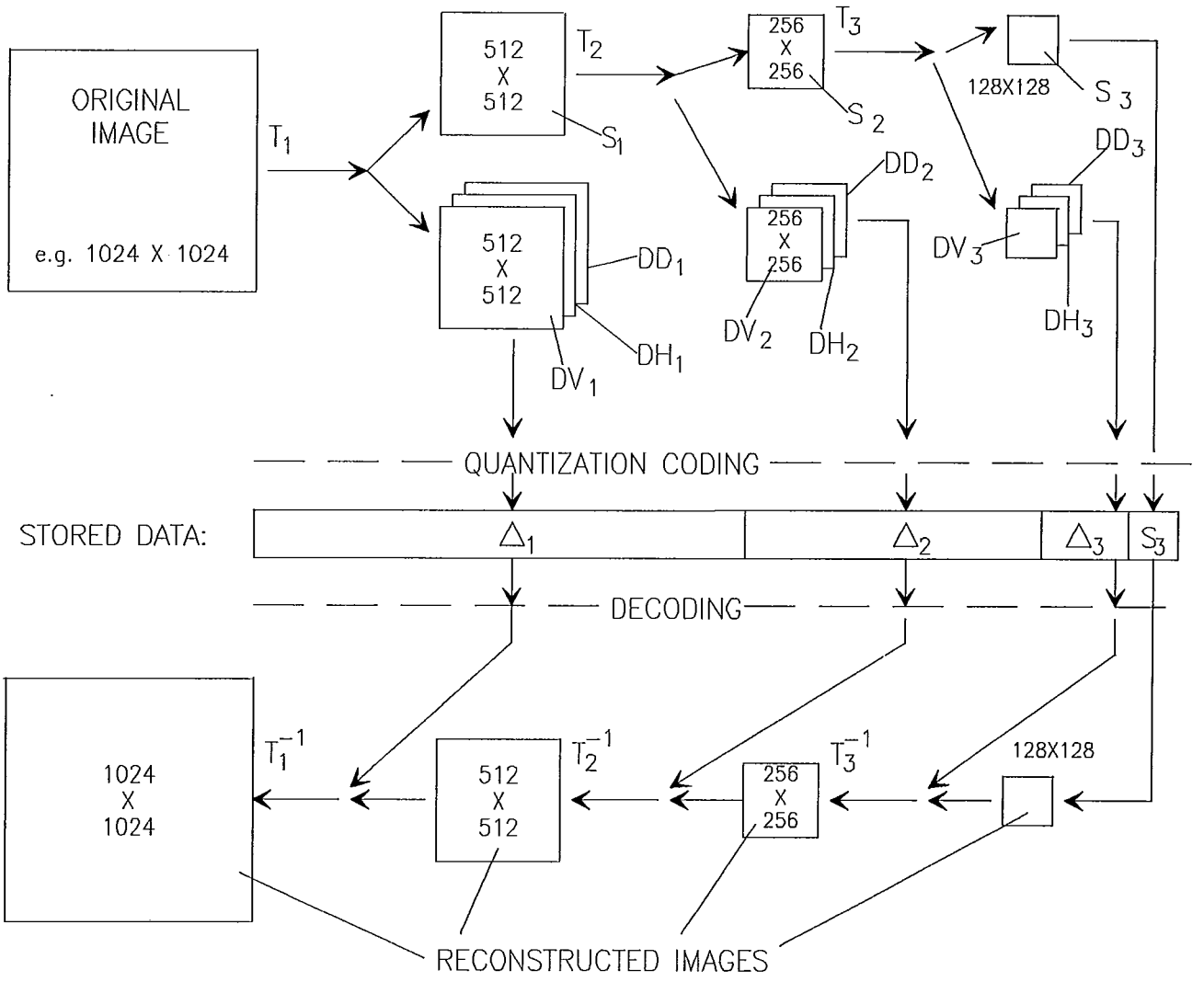

Figure 2-3
HIERARCHICAL TRANSFORMATION AND DATA STORAGE AS WELL AS BACK-TRANSFORMATION AND DISPLAY OF AN S-TRANSFORMED OR PYRAMID-TRANSFORMED IMAGE

Copyright National Electrical Manufacturers Association
Provided by IHS under license with NEMA
No reproduction or networking permitted without license from IHS
Not for Resale

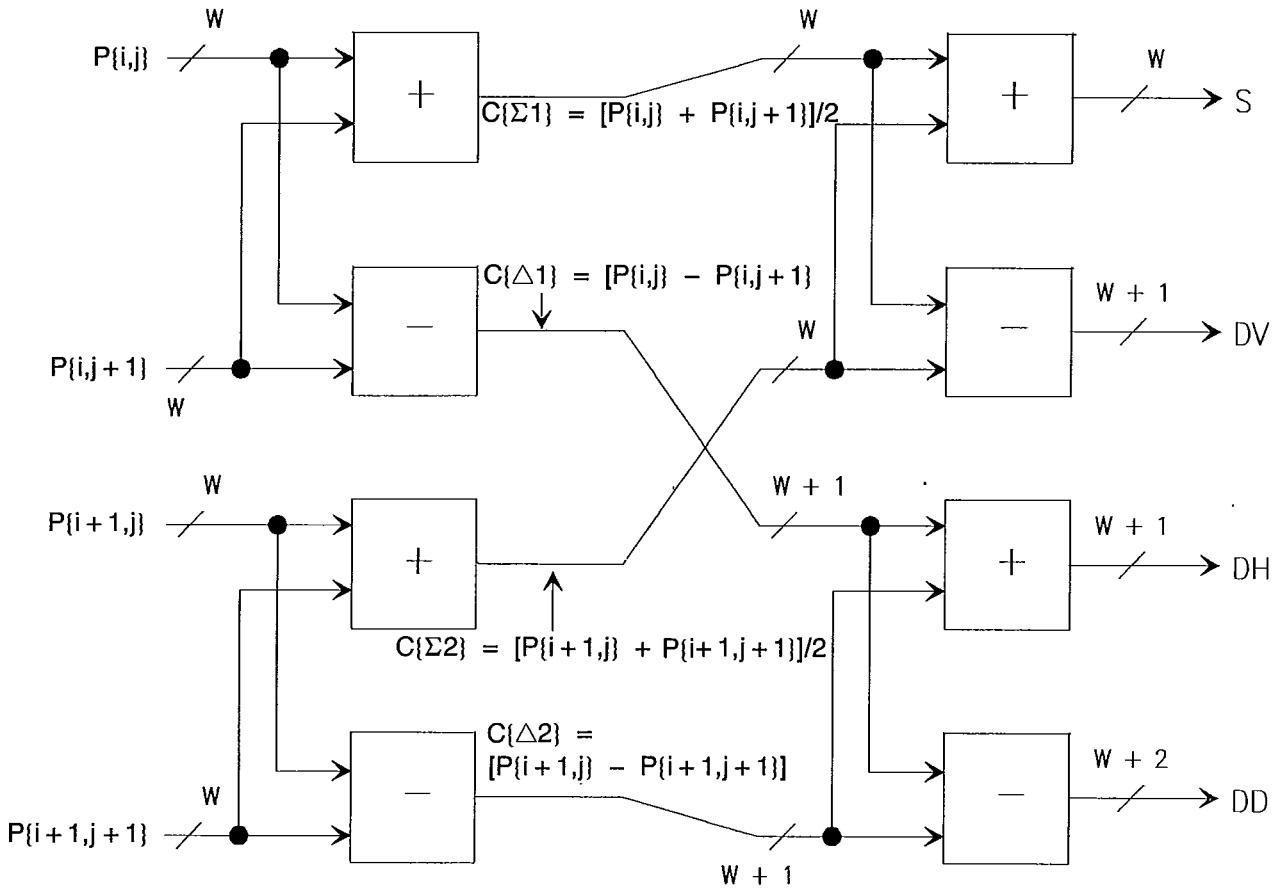

Figure 2-4a
ILLUSTRATION OF THE DIGITIZATION ACCURACY NEEDED IN EXECUTING THE S-TRANSFORM

Copyright National Electrical Manufacturers Association
Provided by IHS under license with NEMA
No reproduction or networking permitted without license from IHS
Not for Resale

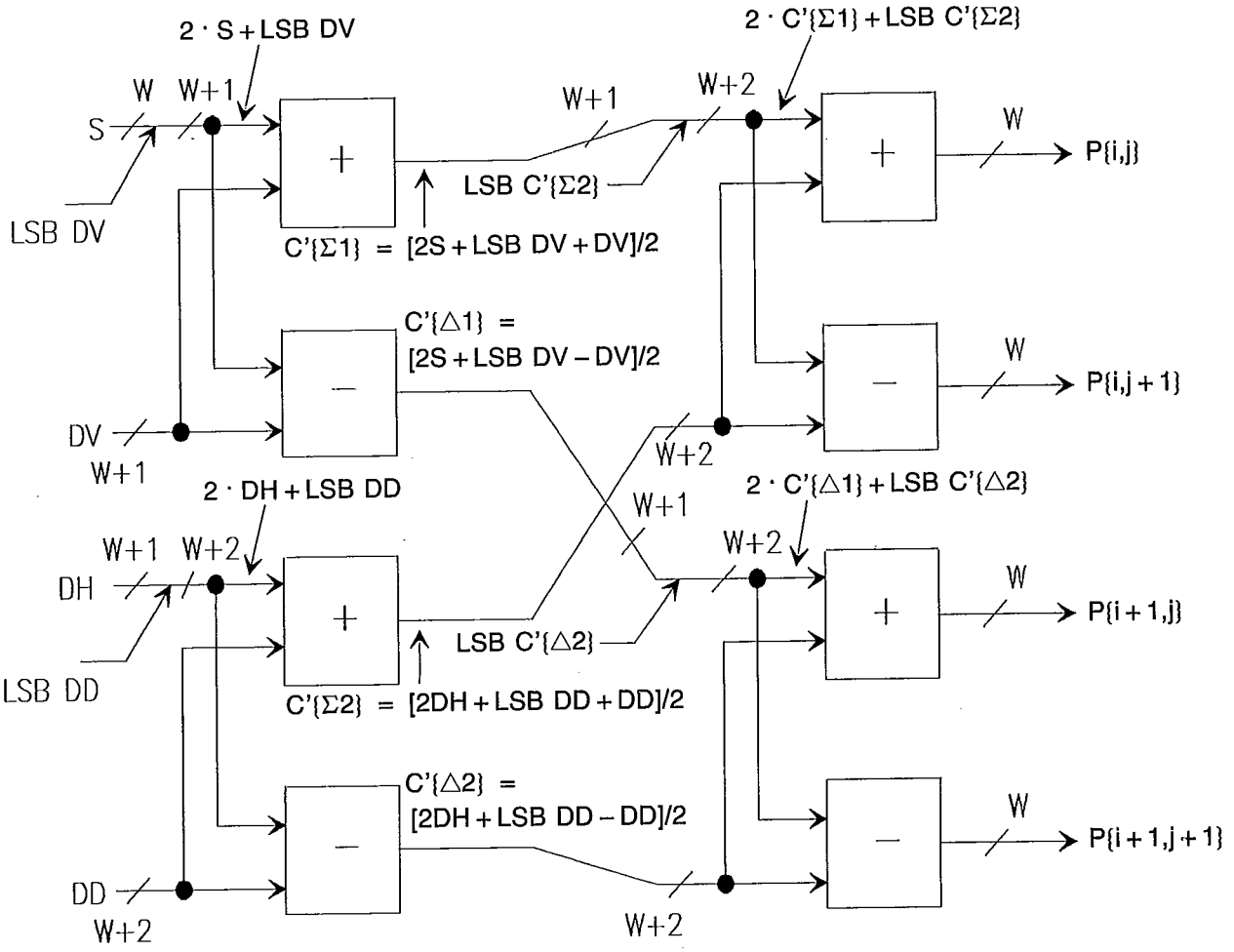

Figure 2-4b
ILLUSTRATION OF HOW THE LEAST SIGNIFICANT BITS ARE RECOVERED IN THE BACK-TRANSFORMATION

Copyright National Electrical Manufacturers Association
Provided by IHS under license with NEMA
No reproduction or networking permitted without license from IHS
Not for Resale

of certain intermediate sums, and the original pixel values can be decoded in a fully bit-preserving fashion.

Authorized Engineering Information 3-1-1989.

The coefficients of the Pyramid Transform are defined in a way very similar to Equations (5–8):

$$PS1_{m,n} = 1/2\,(P_{i,j}+P_{i,j+1}+P_{i+1,j}+P_{i+1,j+1}) \quad (13)$$

$$PDV1_{m,n} = 1/2\,(P_{i,j}+P_{i,j+1}-P_{i+1,j}-P_{i+1,j+1}) \quad (14)$$

$$PDH1_{m,n} = 1/2\,(P_{i,j}-P_{i,j+1}+P_{i+1,j}-P_{i+1,j+1}) \quad (15)$$

$$PDD1_{m,n} = 1/2\,(P_{i,j}-P_{i,j+1}-P_{i+1,j}+P_{i+1,j+1}) \quad (16)$$

and correspondingly, the inverse transform is given by

$$P_{i,j} = 1/2(PS1_{m,n}+PDV1_{m,n}+PDH1_{m,n}+PDD1_{m,n}) \quad (17)$$

$$P_{i,j+1} = 1/2(PS1_{m,n}+PDV1_{m,n}-PDH1_{m,n}-PDD1_{m,n}) \quad (18)$$

$$P_{i+1,j} = 1/2(PS1_{m,n}-PDV1_{m,n}+PDH1_{m,n}-PDD1_{m,n}) \quad (19)$$

$$P_{i+1,j+1} = 1/2(PS1_{m,n}-PDV1_{m,n}-PDH1_{m,n}+PDD1_{m,n}) \quad (20)$$

NEMA Standard 3-1-1989.

The transform equations (13–20) are algebraically identical which is advantageous for the implementation. However, the values of the sum and difference coefficients increase in each transform step by a factor of two.

A variety of coding schemes can be employed for representing the difference and the last sum coefficients. For a fully reversible compression scheme, Huffman or Lempel-Ziv coding is a useful method. For example, the Lempel-Ziv coded sum and difference coefficients of the S-transform are labeled LZSSn, LZSDHn, and LZSDDn, respectively, or the Huffman coded coefficients of the Pyramid transform are HFPSn and HFPDVn, HFPDHn, and HFPDDn, respectively. If greater compression ratios are desired, irreversible quantizer and coding schemes similar to those listed for the discrete cosine transform can be employed.

A practical demonstration of data compression of a Huffman-coded image after S-transformation is given in Section 5.

Authorized Engineering Information 3-1-1989.

2.2 CODING SCHEMES

2.2.1 Huffman Coding

A Huffman code compression scheme represents the values being transmitted by another set of values with varied bit length, usually chosen so that the most probable values have the fewest bits. These codes are represented in a table [15-17].

NEMA Standard 3-1-1989.

The decoding of the Huffman codes typically involves a binary tree by interpreting each bit in sequence and choosing a translation sub-table according to whether the bit is a one or a zero. However, within the framework of this Standard it is only necessary and sufficient to transmit consecutively the entire code table, as the implementation of the decoding is not a subject of the Standard.

Shift codes and escape codes are alternatives to constructing a full Huffman code table and are only used with a Huffman table. A shift code is applied to avoid unnecessary extensions of the Huffman table by bringing the pixel value into the range of already existing Huffman codes [17]. Shift codes and escape codes may be applied to the same image, but are not used on the same pixel.

Authorized Engineering Information 3-1-1989.

A shift code must be followed either by another shift code or by the Huffman encoded value. If a shift code is followed by a Huffman encoded value, the receiver must subtract the shift value from the decoded value. If multiple shift codes precede a Huffman encoded value, the receiver must subtract the accumulated shift values from the decoded value.

An escape code is used to indicate that the actual transformed value rather than a Huffman encoded value follows. If used, it must be followed by the actual transformed value.

Huffman codes, the shift code (if used) and the escape code (if used) all shall have the property that no code is the prefix of another code.

NEMA Standard 3-1-1989.

Examples of Huffman coding are found in Section 5.

Authorized Engineering Information 3-1-1989.

2.2.2 Run Length Encoding

Run length encoding is used when the same encoded value occurs repeatedly, so that the repeated value can be represented by a sequence code that indicates the encoded value and number of repetitions [18–20].

NEMA Standard 3-1-1989.

2.2.3 Lempel-Ziv Coding

The Lempel-Ziv algorithm [21–23] converts variable-length strings of pixels into fixed-length codes. The algorithm is effective in exploiting pixel repetitions, frequently occurring sequences of pixels of specific values, and high-usage pattern redundancy. The Lempel-Ziv algorithm is adaptive in that it builds the table during both the compression and decompression processes. Hence, Lempel-Ziv coding does not require the transmission of a code table.

In Welch's implementation [21] of the Lempel-Ziv algorithm, the string table has a prefix property in that, for every string numbered in the table, its prefix string is also represented in the table; i.e., if string wk, composed of string w and pixel value k is represented in the table, then w is also present in the table. k is called the extension of the prefix w. The string table is initialized by all individual pixel values.

Copyright National Electrical Manufacturers Association
Provided by IHS under license with NEMA
No reproduction or networking permitted without license from IHS
Not for Resale

The Lempel-Ziv code table can be restarted for any reason, for instance, for the difference coefficients of every layer of a hierarchical transform, or when the code table is exhausted, or because the character of the transmitted images has changed. The restart of the table is indicated by a unique code word.

NEMA Standard 3-1-1989.

A numerical example for Lempel-Ziv encoding is given in Section 5.

Authorized Engineering Information 3-1-1989.

2.2.4 Perimeter Encoding

Perimeter encoding is used along the edge of an image to eliminate pixels that carry no clinical content. The sketch (Figure 2-5) indicates the meaning of numbers Vi and Wi for row i, where Vi is the number of pixels dropped at the beginning of the row, and Wi the number of pixels dropped at the end of the row. The total number of pixels in the row is given by the rectangular dimension of the image.

NEMA Standard 3-1-1989.

2.2.5 Code Combinations

Run length encoding, perimeter encoding, shift coding, and Huffman coding may be used in any combination by including the appropriate elements. Similarly, at least in principle, perimeter encoding could be combined with Lempel-Ziv coding. It is the implementor's responsibility to ensure that the choices made for the codes are unique and consistent with each other.

Authorized Engineering Information 3-1-1989.

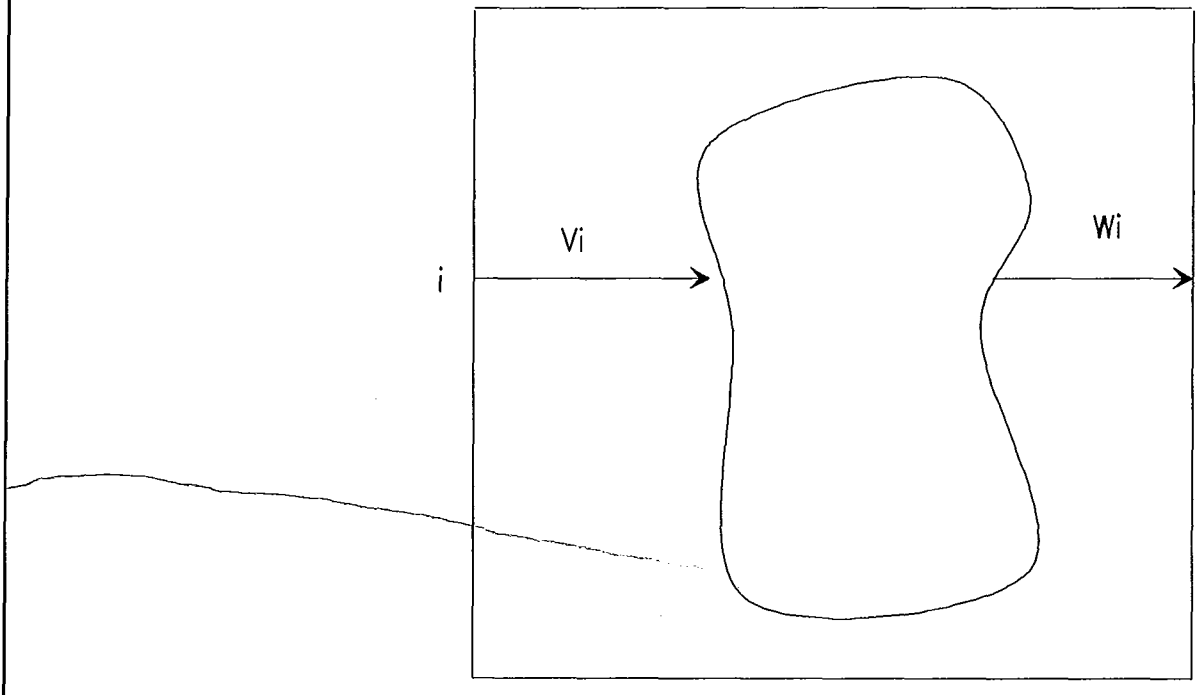

Figure 2-5
ILLUSTRATION FOR PERIMETER ENCODING

Copyright National Electrical Manufacturers Association
Provided by IHS under license with NEMA
No reproduction or networking permitted without license from IHS
Not for Resale

Section 3
DESCRIPTION OF DATA ELEMENTS

3.1 INTRODUCTION

This Section contains a description of the data elements to be used to describe images that are transmitted employing data compression. This data dictionary is an expansion of the one contained in ACR/NEMA 300, and is used in combination with the data dictionary in that Standard.

Table 3-1
DEFINITIONS OF SYMBOLS

DEFINITIONS FOR VALUE REPRESENTATIONS (VR)

BI	16 bit binary, 2's complement except for pixels
BD	32 bit binary
AN	ASCII numeric
AT	ASCII text

DEFINITIONS FOR VALUE TYPES (VT)

EV	Enumerated value for which a list of appropriate entries are given in the data dictionary
DF	Defined format (AN or AT)
FF	Free format (AN or AT)
HX	Any hexadecimal number (BI or BD)

DEFINITIONS FOR VALUE MULTIPLICITY (VM)

S	Single
M	Multiple

DEFINITIONS FOR DATA ELEMENT TYPES

1	Mandatory if compression employed
1D	Mandatory, but receiver shall assume a default if element is not sent
2	Mandatory for a particular type of compression
2D	Mandatory for a particular type of compression, but receiver will assume a default if the element is not sent
3	Optional elements

Note that there is no element type corresponding to types 2 or 2D of the interface standard. Except for data element types, all other definitions are the same as in ACR/NEMA 300.

NEMA Standard 3-1-1989.

3.2 ORGANIZATION OF DATA DICTIONARY

The following data dictionary is organized in six sections for purposes of clarity. The first section details the changes to group 0028H to describe the type of compression being employed. The next five sections illustrate the additional data elements required for DPCM, Discrete Cosine Transform, S-Transform, or Pyramid Transform, and various forms of coding. Section 6 of this Standard contains the entire data dictionary in numerical order.

NEMA Standard 3-1-1989.

3.3 COMPRESSION TYPE

Group 0028H, elements 005FH through 0066H, define whether compression is employed, and if so, the nature and author of the compression procedure. Element (0028H,005FH) is the appropriate version number of this standard (not of ACR/NEMA 300).

Copyright National Electrical Manufacturers Association
Provided by IHS under license with NEMA
No reproduction or networking permitted without license from IHS
Not for Resale

3.3.1 Compression Code

Element (0028H,0060H) can take on one of five enumerated values:

NONE: Compression is not employed.

DEF: Defined = This image is compressed, and the complete definition of the compression procedure is contained within the message.

CONT: Contained = This image is compressed, and the complete definition of the compression procedure is contained within the message, but specifically alerts the receiver that the compression procedure is for this image only and need not be saved.

IMP: Implied = This image is compressed, but only the name of the compression procedure is being sent. The receiver is expected to understand the name and be able to perform the decompression. It is assumed either that the definition was DEFined in an earlier message and that the receiver stored the definition or that the receiver knows the definition by some other means. If IMPlied is used, elements (0028H, 0061H) to (0028H,0063H) are sent along with group 7FE0H. No other elements defined in this Standard for compression are sent.

PROP: Proprietary = The message will follow the group and data element numbering conventions but the compression technique is either institution or company proprietary and either is not described or is described in shadow or private groups.

NEMA Standard 3-1-1989.

3.3.2 Labeling

Elements (0028H,0061H–0063H) label the compression procedure.

Element (0028H, 0061H) is the label of the device that is the originator of the compression procedure. Element (0028H,0062H) is the label of the compression procedure. Element (0028H,0063H) is a text description of the compression procedure, intended to be human-readable, rather than machine-readable.

NEMA Standard 3-1-1989.

The label in element (0028H,0061H) should be compatible with the labels of (0008H,1010H).

Element (0028H, 0061H) is used with (0028H, 0062H) in an IMPlied compression type to match a previously DEFined compression type. If a new definition of a particular procedure should arrive, the receiver would update its copy of that procedure. However, if the source of the new definition, given in (0008H, 1010H), is not the same as the originator, given in (0028H, 0061H), the receiver should use caution regarding updating the procedure. The receiver may return status code A413 to indicate this situation to the sender.

Authorized Engineering Information 3-1-1989.

3.3.3 Pointers

In the following sections on specific compression procedures, pointers are used to indicate where more detailed information on a particular aspect of the message is located.

Pointers are the group and element number of the referenced information. Pointers have been introduced for the following reasons:

1. Pointers organize the dictionary and enhance readability.
2. Pointers allow operations to be located anywhere within group 0028H, without constraining the locations at which the operation appears. This permits operations to be shared by different compression procedures without concern as to the order in which the operations are used.
3. Pointers will be used to indicate the location of tables and coded image data, which are in separate groups from 0028H (see Table 4-1 of the ACR/NEMA Standard 300). Tables will start with group 1000H and coded image data will usually be in group 7FE0H, and pointers will be used to indicate specific elements in these groups when appropriate.

Authorized Engineering Information 3-1-1989.

3.3.4 Compression Sequence

Elements (0028H,0065H) and (0028H,0066H) describe the exact sequence of operations performed in compressing the image so that the decompression can be properly executed. Element (0028H,0065H) is a multiple enumerated value text description of the sequence of compression operations, comprised of a series of primitive operation names separated by backslashes. The names defined in the following dictionary sections are: PERIMETER, RUN, DPCM, DCT, S_TRANS, P_TRANS, CODE, and PRIVATE. PRIVATE is used to send a PROPrietary compression method. Element (0028H,0066H) is a list of pointers to the definitions of the primitive operations. If a particular pointer is not necessary, it shall not be sent.

NEMA Standard 3-1-1989.

3.3.5 Repeat Interval

Element (0028H, 0068H) is the repeat interval, specifying, for any compression procedure, the interval at which actual transformed values are sent. The absence of

Copyright National Electrical Manufacturers Association
Provided by IHS under license with NEMA
No reproduction or networking permitted without license from IHS
Not for Resale

(0028H,0068H) indicates that this feature is not used. Note that for a repeat interval of N that the first, Nth + 1, 2Nth + 1...values will be sent as actual transformed values with no escape code (see 3.7).

NEMA Standard 3-1-1989.

3.3.6 Blocking

If an image is sent as a series of blocks, rather than in the conventional raster scan order, elements (0028H, 0090H–0092H) must be sent. Element (0028H,0090H) will contain BLOCK for blocked data format, with its absence indicating no blocking.

If (0028H,0090H) = BLOCK, elements (0028H, 0091H and 0092H) will provide the number of rows and columns in each block; these sizes must be factors of (0028H,0010H) and (0028H,0011H) respectively, if there is no block overlap. Block overlap is handled by two new elements (0028H,0093H) and (0028H,0094H) whose values indicate the number-of-pixels overlap both vertically and horizontally. The number of blocks in each direction can be obtained by dividing the picture size by "block rows" less "horizontal overlap" and "block columns" less "vertical overlap" and rounding up to the nearest whole number. If 0093H and 0094H are zero or omitted, the default condition is no overlap. The data within each block shall be sent in raster scan order, as defined in ACR/NEMA 300.

NEMA Standard 3-1-1989.

3.4 DPCM COMPRESSION PROCEDURES

If DPCM is employed, it shall be described in elements (0028H,0080H–0082H) and (0028H,0065H) shall contain DPCM. The size of the predictor, the number of rows (m in 2.1.1) followed by the number of columns (n in 2.1.1), are given in elements (0028H,0080H) and (0028H,0081H). The constants that comprise the prediction kernel (a{K,L} in 2.1.1) are given in (0028H, 0082H), beginning with a{–m + 1, –[n–1]/2} through a{–m + 1, + [n–1]/2}, then through succeeding rows to the last constant, which is a{0, + [n–1]/2}.

Table 3-3 contains all of the elements needed to specify DPCM with Huffman coding. Refer to 3.7 for the definition of Huffman coding.

NEMA Standard 3-1-1989.

Table 3-2
ABBREVIATED DATA DICTIONARY, COMPRESSION TYPE

Group	Element	Name	VR	VT	VM	Type	Definition
0028	005F	Compression Recognition Code	AT	EV	S	1	ACR/NEMA 1.0
0028	0060	Compression Code	AT	EV	S	1D	Class of compression scheme: NONE, DEF, CONT, IMP, or PROP. Default = NONE
		If (0028H, 0060H) = DEF, CONT, IMP, or PROP					
0028	0061	Compression Originator	AT	FF	S	1D	Label of device that is the origin of the compression procedure. (ex: NMR 3) Default = (0008H,1010H).
0028	0062	Compression Label	AT	FF	S	1	Label of compression procedure. (ex: DPCM V1.0)
0028	0063	Compression Description	AT	FF	S	3	Description of compression procedure. (ex: 2-D LINEAR PREDICTOR, HUFFMAN CODING)
		If (0028H, 0060H) = DEF, CONT, or PROP					
0028	0065	Compression Sequence	AT	EV	M	2	Sequence of compression operations in order performed by transmitter. Choices: PERIMETER RUN DPCM DCT S_TRANS P_TRANS CODE PRIVATE (ex: DPCM\CODE)

Copyright National Electrical Manufacturers Association
Provided by IHS under license with NEMA
No reproduction or networking permitted without license from IHS
Not for Resale

Group	Element	Name	VR	VT	VM	Type	Definition
		If (0028H, 0060H) = DEF or CONT					
0028	0066	Compression Step Pointers	BI	HX	M	2	Pointers to the location of each compression operation (ex: 0028 0080 0028 0800)
0028	0068	Repeat Interval	BI	HX	S	2	Number of pixels between those given as actual transform values. Default = not used.
0028	0090	Blocked Pixels	AT	EV	S	2D	BLOCK, NONE; Default = NONE
0028	0091	Block Rows	BI	HX	S	2D	Number of rows in blocks Default = not used
0028	0092	Block Columns	BI	HX	S	2D	Number of columns in block Default = not used
0028	0093	Row Overlap	BI	HX	S	2D	Number of pixels in row overlap Default = 0
0028	0094	Column Overlap	BI	HX	S	2D	Number of pixels in column overlap Default = 0

Table 3-3
ABBREVIATED DATA DICTIONARY, DPCM

Group	Element	Name	VR	VT	VM	Type	Definition
0028	0065	Compression Sequence	AT	EV	M	1	Sequence of compression operations in order performed by transmitter (ex: DPCM\CODE)
0028	0066	Compression Step Pointers	BI	HX	M	1	Pointers to the location of each compression operation, (ex: 0028 0080 0028 0800)
0028	0080	Predictor Rows	BI	HX	S	2	Number of rows in predictor
0028	0081	Predictor Columns	BI	HX	S	2	Number of columns in predictor
0028	0082	Predictor Constants	BI	HX	M	2	Predictor constants, in raster order
0028	0800	Code Label	AT	EV	M	2	Label of coding operation Choices: HUFFMAN SHIFT ESCAPE RUN_LENGTH LEMPEL_ZIV
0028	0802	Number of Tables	BI	HX	S	2D	Number of code tables; Default = 1
0028	0803	Code Table Location	BI	HX	M	2D	Group and element numbers of first code table Default = (1000H 0010H)

Copyright National Electrical Manufacturers Association
Provided by IHS under license with NEMA
No reproduction or networking permitted without license from IHS
Not for Resale

3.5 DISCRETE COSINE TRANSFORM COMPRESSION PROCEDURES

To transmit a DEFined image compressed with DCT, the transmitter must provide the compression sequence in (0028H,0065H), with the first operation being "DCT" followed by other operations, including "CODE" as appropriate. Element (0028H,0066H) will point to the elements containing information on each operation, with the location of the DCT description always at (0028H,0700H). If the DCT is a block operation, (0028H,0090H) will indicate "BLOCK" with size parameters in 0091H and 0092H.

NEMA Standard 3-1-1989.

3.5.1 Data Block Contents

The DCT operation section shall start with the label of the DCT operation in (0028H,0700H). Element (0028H,0701H) shall contain a text description of each data block (or the single data block in the case of a full-frame DCT). This text description shall use the following terms: NORM_FACTOR, ZONAL_ENUM, ADAPTIVE_MAP, CODE_ENUM. Element (0028H, 0702H) will contain pointers corresponding to each entry in (0028H,0701H).

If normalization is used, NORM_FACTOR will appear first in (0028H,0701H) and a normalization factor (B in 2.1.2) described in format given by (0028H,0710H) shall be the first item in each data block. Element (0028H,0710H) consists of two words. The first word specifies the number of bits in the (signed) normalization word. The second word specifies the number of bits to the right of the implied decimal point.

If enumerated zonal bit allocation maps are used, element (0028H,0701H) shall contain ZONAL_ENUM and (0028H,0720H) shall contain the number of bits allocated to zonal map number in the data block. The enumerated zonal maps shall be in group 1010H, starting with element 0004H as map number 1, using consecutive even elements. Element (0028H,0721H) shall contain the group and element number of the first map, with a default of (1010H,0004H), and (0028H,0722H) shall contain a value giving the number of bits stored for each entry in the zonal maps.

NEMA Standard 3-1-1989.

Each zonal map contains as many entries as the data block size (0028H,0091H and 0092H) with each entry stored as the number of bits given by (0028H,0722H). Each zonal map entry gives the number of bits of data at the corresponding location in the data block, with the order of the zonal map entries being the same as the data block, namely left to right and top to bottom.

Refer to example 5.2.1.

Authorized Engineering Information 3-1-1989.

If adaptive maps are used, element (0028H,0701H) shall contain ADAPTIVE_MAP and (0028H,0730) shall contain a value giving the number of bits in each data block to describe each row of that block. In each data block a series of values shall follow, with one value per column of the block (0028H,0092H), with each value giving the number of coefficients transmitted in each row, starting from the left. (Refer to Figure 3-1 and example 5.2.2.)

If coding is employed, it shall always be assumed to be enumerated. Element (0028H,0701H) shall contain CODE_ENUM and (0028H,0720H) shall contain the number of bits used to represent the code table number. The description of the code table(s) shall be in (0028H,0800H). In each data block the code table number shall appear next following the map representations. Element (0028H,0802H) shall give the number of code tables and (0028H,0803H) the location of the first code table.

If no zonal map or coding is used, the data shall be of fixed bit length, given by (0028H,0101H) but shall be signed numbers.

NEMA Standard 3-1-1989.

In summary, each data block contains information in the following order (when that operation is used):

Normalization Factor
Zonal Map Number
Adaptive Map Runs
Code Table Number
Coded Coefficients as signed numbers

Authorized Engineering Information 3-1-1989.

Figure 3-1
ADAPTIVE MAP

The following represents an 8×8 data block, where the coefficients to be transmitted are represented by X, and the coefficients to be omitted (assumed to be 0's by the receiver) are represented by 0:

```
X X X X X X X X
X X X X X X 0 0
X X X X X 0 0 0
X X X X X X 0 0
X X X 0 0 0 0 0
X X X X 0 0 0 0
X X 0 0 0 0 0 0
0 0 0 0 0 0 0 0
```

The adaptive map values, corresponding to the number of transmitted coefficients in each row, would be:

8 6 5 6 3 4 2 0

3.5.2 Coding

Refer to section 3.7 for the definitions of coding.

NEMA Standard 3-1-1989.

Copyright National Electrical Manufacturers Association
Provided by IHS under license with NEMA
No reproduction or networking permitted without license from IHS
Not for Resale

Table 3-4
ABBREVIATED DATA DICTIONARY, DCT

Group	Element	Name	VR	VT	VM	Type	Definition
0028	0065	Compression Sequence	AT	EV	M	1	Sequence of compression operations in order of transmitter (ex: DCT\CODE)
0028	0066	Compression Step Pointers	BI	HX	M	1	Pointers to the location of each compression operation, (ex: 0028 0700 0028 0800)
0028	0700	DCT Label	AT	FF	S	3	Label of DCT (ex: V1.0)
0028	0701	Data Block Description	AT	EV	M	2	Text description of block; Choices, in order: NORM_FACTOR ZONAL_ENUM ADAPTIVE_MAP CODE_ENUM (ex: NORM_FACTOR\CODE_ENUM)
0028	0702	Data Block	BI	HX	S	2	Group and element numbers for each item in (0028H,0701H) (ex: 0028 0710 0028 0740)
0028	0710	Norm Factor Format	BI	HX	M	2	Number of bits and number of bits to right of decimal point in normalization factor (ex: 0010 000C for a 16 bit factor with 12 bits to the right of decimal point)
0028	0720	Zonal Map Number Format	BI	HX	S	2	Number of bits in data block used to store zonal map number (ex: 4)
0028	0721	Zonal Map Location	BI	HX	M	2D	Group and element number of first zonal map Default = (1010H,0004H)
0028	0722	Zonal Map Format	BI	HX	S	2	Number of bits per zonal map entry at location given in (0028H,0721H)(ex: 4)
0028	0730	Adaptive Map Format	BI	HX	S	2	Number of bits used for each adaptive map run length entry (ex. 5)
0028	0740	Code Number Format	BI	HX	S	2	Number of bits used to store code table number (ex: 6)
0028	0800	Code Label	AT	EV	M	2	Label of coding operation; Choices: HUFFMAN SHIFT ESCAPE RUN_LENGTH LEMPEL_ZIV
0028	0802	Number of Tables	BI	HX	S	2D	Number of code tables; Default = 1
0028	0803	Code Table	BI	HX	M	2D	Group and element numbers of first code table; Default = (1000H,0010H)
1010	0004	Zonal Map Number 1	BI	HX	M	2	First zonal map: number of entries per (0028H,0091–92H) followed by the number of bits per entry according to (0028H,0722H)
1010	0006	Zonal Map Number 2	BI	HX	M	2	Second zonal map
		and so on for remaining zonal maps					
7FE0	0010	Image Data	BI	HX	M	X	Containing data blocks, according to the format of (0028H,0701H) padded with zeros to form a whole number of words

Copyright National Electrical Manufacturers Association
Provided by IHS under license with NEMA
No reproduction or networking permitted without license from IHS
Not for Resale

3.6 S-TRANSFORM AND PYRAMID TRANSFORM COMPRESSION PROCEDURES

If the compression type is DEFined in the message, element (0028H,0065H) gives the sequence of the compression operation in the order it is executed by the transmitter. Element (0028H,0065H) shall contain S_TRANS or P_TRANS followed by coding of the coefficients. Element (0028H,0066H) points to the elements defining each operation, with the definition of the transformation always starting at (0028H,0400H).

Elements (0028H,0400H) provide the label and version number of the S-Transform or Pyramid Transform. Element (0028H,0402H) gives the number of transformation steps that have been applied. Element (0028H, 0403H) lists the sequence in which the coded data are transmitted. The enumerated values for (0028H, 0403H) contain a two-letter abbreviation of the code followed by the coefficient label. To take advantage of the viewability of the basic image and each subsequently reconstructed transform layer, the layers shall be transmitted in reverse order of the generation process; i.e., last sum coefficients, followed by the set of last difference coefficients, and so forth. However, the sequence of the data within each layer does not change.

Regarding the transmission order of the difference coefficients of every transform step, two schemes shall be possible:

1. The difference coefficients of a particular kind are transmitted in one block each of a given transform layer, e.g., all coefficients HFSDV4, then all coefficients HFSDH4, then all coefficients HFSDD4, followed by blocks of data of the third transform step. For this example, element (0028H, 0403H) would show the sequence: HFSS4\HFSDV4\ HFSDH4\HFSDD4\HFSDV3\...
2. All difference coefficients of a transform step are transmitted in one group of triplets, e.g., first vertical coefficient HFSDV4(1), first horizontal HFSDH4(1), first diagonal HFSDD4(1), followed by HFSDV4(2), HFSDH4(2), HFSDD4(2),....In this case, Element (0028H, 0403H) could show the sequence: HFSS4\ HFSD4 VHD\HFSD3 VHD\....

Element (0028H, 0404H) contains the pointers to the definitions of each coefficient layer in the order of (0028H,0403H).

Elements (0028H,0410H and 0411H) provide the number of rows and number of columns in the basic image and the last difference images. Elements (0028H, 0412H and 0413H) provide the coding schemes and pointers to definitions, respectively, for these images. Offset by 16 (10H) elements, corresponding information follows on the matrix size and coding schemes of subsequent image transforms. (Refer to 3.7 for the definitions of coding.)

The coded sum and difference coefficients are transmitted in separate elements (7FE0H,0010H), (7FE0H, 0020H), (7FE0H,0030H), etc., in the order of (0028H, 0403H).

NEMA Standard 3-1-1989.

The S-Transform is illustrated in the data dictionary with Huffman and shift coding of all coefficients.

Authorized Engineering Information 3-1-1989.

3.7 CODING

Included in this dictionary section are Huffman coding, shift coding, escape coding, run length coding, and Lempel-Ziv coding.

If any form of coding is used, (0028H,0065H) shall contain CODE. Element (0028H,0800H) shall provide the label of the particular coding operation being employed. The label is made from the following list of options: HUFFMAN, SHIFT, ESCAPE, RUN_ LENGTH, and LEMPEL_ZIV. The number of coding tables shall be provided in (0028H, 0802H) with a default of 1 table. The location of the first code table shall be given in (0028H, 0803H), with the default location being (1000H, 0010H), with subsequent tables every 10H elements.

Within each coding table, all codes (Huffman, Shift, escape and run length) must satisfy the condition that no code can be the prefix of another code.

NEMA Standard 3-1-1989.

3.7.1 Huffman Coding

If Huffman coding is employed, element (0028H, 0800H) shall contain HUFFMAN. The first Huffman code table is located in element (1000H,0013H), with subsequent tables every 10H elements.

The Huffman code table(s) is organized as a number (1000H,0012H) of coding triplets, with all values stored as words:

1. The first value being represented;
2. Number of bits in code for the first value;
3. Code for the first value;
4. The second value being represented;
5. Number of bits in code for the second value;
6. Code for the second value; and so forth.

NEMA Standard 3-1-1989.

3.7.2 Shift Coding

Shift coding shall only be employed with Huffman coding and shall be indicated by SHIFT in element (0028H,0800H). The first shift table shall be in element (1000H,0015H), with subsequent shift tables every 10H elements. The number of shifts represented is in (1000H,1014H).

Copyright National Electrical Manufacturers Association
Provided by IHS under license with NEMA
No reproduction or networking permitted without license from IHS
Not for Resale

Table 3-5
ABBREVIATED DATA DICTIONARY, S-TRANSFORM

Group	Element	Name	VR	VT	VM	Type	Definition
0028	0065	Compression Sequence	AT	FF	M	1	Sequence of compression operations in order of transmitter. (ex: S_ TRANS\CODE or P_TRANS\CODE)
0028	0066	Compression Step Pointers	BD	HX	M	1	Pointers to the location of each compression operation, (ex: 0028 0400 0028 0800).
0028	0400	Label	AT	FF	S	2	Label of operation (ex: v2.3).
0028	0402	Number of Transform Steps	BI	HX	S	2	Number of transformation steps (ex: 4).
0028	0403	Sequence of Compressed Data	AT	EV	M	2	Sequence in which coded data are transmitted: xxyyyy where xx is a two-letter code abbreviation and yyyy is a four-character coefficient abbreviation. ex: (HFSS4\HFSDV4\HFSDH4\HFSDD4\ HFSDV3\HFSDH3\ HFSDD3\HFSDV2\ HFSDH2\HFSDD2\HFSDV1\HFSDH1\ HFSDD1); where: HFSSn = Huffman coded last sums. HFSDVn = Huffman coded n-th vertical difference coeffs. HFSDHn = Huffman coded n-th horizontal difference coeffs. HFSDDn = Huffman coded n-th diagonal difference coeffs.
0028	0404	Pointers to Details of Coefficients	BI	HX	M	2	Group and element numbers for each transform step in the order of (0028H, 0403H). (ex: 0028 0410 0028 0420 ...)
0028	0410	Rows for Nth Order Coefficients	BI	HX	S	2	Number of rows (v4) in subsection of nth sum and difference coefficients.
0028	0411	Columns for Nth Order Coefficients	BI	HX	S	2	Number of columns (h4) in subsection of nth sum and difference coefficients.
0028	0413	Coefficient Coding Pointers	BI	HX	M	2	Group and element numbers pointing to coding scheme of coefficients of n-th transform step, in order of (0028H,0403H).
0028	0420	Rows for (N–1)th Order Coefficients	BI	HX	S	2	Number of rows (v3) in subsection of (n–1)th difference coefficients.
0028	0421	Columns for (N–1)th Order Coefficients	BI	HX	S	2	Number of columns (h3) in subsection of (n–1)th difference coefficients.
0028	0422	Coefficient Coding	AT	FF	M	2	Coding scheme used for coefficients of (n–1)th transform step, in order of (0028H,0403H.) (ex: HUFFMAN\HUFFMAN\HUFFMAN\ or HUFFMAN_\)
0028	0423	Coefficient Coding Pointers	BI	HX	M	2	Group and element numbers pointing to each coeff. coding scheme in (0028H,0422H). (Ex: 0028 0840 0028 0850 0028 0860)

and so on for other difference coefficients

Copyright National Electrical Manufacturers Association
Provided by IHS under license with NEMA
No reproduction or networking permitted without license from IHS
Not for Resale

Group	Element	Name	VR	VT	VM	Type	Definition
0028	0800	Code Label	AT	EV	M	2	Label of coding operation. Choices: HUFFMAN SHIFT ESCAPE RUN_LENGTH LEMPEL_ZIV
0028	0801	Coefficients	AT	FF	M	2	Coefficients for which the code table is listed in (0028H,0803H). (Ex: HFSS4\HFSDV4)
0028	0803	Code Table Location	BI	MX	M	2D	Group and element numbers of first code table. Default = (1000H,0010H).
0028	0808	Image Data Location	BI	HX	M	2	Group and element number of coded coefficients. (ex: 7FE0 0010 7FE0 0020)
0028	0810	Code Label	AT	EV	M	2	Label of coding operation. Choices: HUFFMAN SHIFT ESCAPE RUN_LENGTH LEMPEL_ZIV
0028	0811	Coefficients	AT	FF	M	2	Coefficients for which a code table is listed in elements (0028H,0813H) (Ex: HFSDH4).
0028	0813	Code Table Location	BI	HX	M	2D	Location of second code table; Default = (1000H,0020H).
0028	0818	Image Data Location	BI	MX	M	2	Group and element number of coded coefficients. (ex: 7FE0 0030)
		. . . and so on for other difference coefficients . . .					
7FE0	0000	Group Length	BD	HX	S	1	An even number of bytes from the end of the value field to the beginning of the next group.
7FE0	0010	Coefficients SSn	BI	HX	M	1	Coded image data for SSn
7FE0	0020	Coefficients SDVn	BI	HX	M	1	Coded image data for SDVn
7FE0	0030	Coefficients SDHn	BI	HX	M	1	Coded image data for SDHn
7FE0	0040	Coefficients SDDn	BI	HX	M	1	Coded image data for SDDn
		. . . and so on for other difference coefficients . . .					

Copyright National Electrical Manufacturers Association
Provided by IHS under license with NEMA
No reproduction or networking permitted without license from IHS
Not for Resale

Table 3-6
ABBREVIATED DATA DICTIONARY, CODING

Group	Element	Name	VR	VT	VM	Type	Definition
0028	0800	Code Label	AT	EV	M	2	Label of coding operation. Choices: HUFFMAN SHIFT ESCAPE RUN_LENGTH LEMPEL_ZIV
0028	0802	Number of Tables	BI	HX	S	2D	Number of code tables; Default = 1.
0028	0803	Code Table Location	BI	HX	M	2D	Group and element numbers of first code table. Default = (1000H 0010H)
0028	0804	Lempel-Ziv bits per code	BI	HX	S	2	Number of bits in each Lempel-Ziv code.
0028	0813	Second Code Table Location	BI	HX	S	2D	Group and element numbers of second code table. Default = (1000H,0020H)
1000	0000	Group Length	BD	HX	S	2	An even number of bytes from the end of the value field to the beginning of the next group.
1000	0010	Escape Triplet #1	BI	HX	M	2	First escape triplet: Number of actual value bits, number of escape code bits, escape code.
1000	0011	Run Length Triplet #1	BI	HX	M	2	First run length triplet: Number of run length value bits, number of run length code bits, run length code.
1000	0012	Huffman Table Size	BI	HX	S	2	Number of data triplets in Huffman table.
1000	0013	Huffman Table #1	BI	HX	M	2	Huffman table #1, triplets: Value 1 being represented, the number of value 1 code bits, code for value 1, etc.
1000	0014	Shift Table	BI	HX	S	2	Number of data triplets in shift table.
1000	0015	Shift Table #1	BI	HX	M	2	Shift table #1, triplets: Shift represented, number of shift code bits, code for shift.
1000	0020	Escape Triplet #2	BI	HX	M	2	Second escape triplet.
1000	0021	Run length Triplet #2	BI	HX	M	2	Second run length triplet.
1000	0022	Huffman Table Size #2	BI	HX	S	2	Number of data triplets in Huffman table #2.
1000	0023	Huffman Table #2	BI	HX	M	2	Huffman table #2.
1000	0024	Shift Table Size	BI	HX	S	2	Number of data triplets in shift table #2.
1000	0025	Shift Table #2	BI	HX	M	2	Shift table #2.

and so on for remaining code tables

Copyright National Electrical Manufacturers Association
Provided by IHS under license with NEMA
No reproduction or networking permitted without license from IHS
Not for Resale

The shift code table(s) is organized as triplets:

1. The first shift represented;
2. Number of bits in code for the first shift;
3. Code for the first shift;
4. The second shift represented;
5. Number of bits in code for the second shift;
6. Code for the shift; and so forth.

NEMA Standard 3-1-1989.

3.7.3 Escape Code

The escape code is used in conjunction with Huffman and shift coding to transmit values for which no combination of Huffman and shift codes would be appropriate. If an escape code is utilized, element (0028H,0800H) shall include ESCAPE, and element (1000H,0010H) shall contain the first escape code triplet. Subsequent escape codes shall be located every 10H elements.

The escape code triplet is stored as three words:

1. Number of bits in the actual value that follows the escape code;
2. Number of bits in the escape code; and,
3. Escape code.

NEMA Standard 3-1-1989.

3.7.4 Run Length Coding

If run length coding is employed, element (0028H, 0800H) shall include RUN_LENGTH. The run length is described as a word triplet in element (1000H,0011H) for the first run length code, with subsequent codes every 10H elements:

1. Number of bits in the run length value;
2. Number of bits in the run length code; and
3. Run length code.

The (unsigned) run length value is the number of repetitions of the preceding value.

NEMA Standard 3-1-1989.

In the data, the run length code will be followed by a run length value. This run length value (N) will indicate the repetition of the previous value (typically a pixel value) "N" times.

Authorized Engineering Information 3-1-1989.

3.7.5 Lempel-Ziv Coding

If Lempel-Ziv coding is used, elements (0028H, 0800H) will contain LEMPEL_ZIV. The number of code tables indicated in (0028H,0802H) is zero. Element (0028H,0804H) lists the number of bits used for the fixed-length code.

For indicating the restart of the code table, the highest code value shall be used (i.e., in binary representation, the word in which all digits are 1). It is assumed that the code table is restarted at the beginning of every image transmission. If the "restart code" does not appear at the beginning of subsequent data sections when the transmission of the image is structured (by pointers pointing to different elements in Groups 7FE0H to 7FFFH), it shall be assumed that the previously used code table continues to be employed.

NEMA Standard 3-1-1989.

Reference is made to element (0028H,0101H), which provides the number of bits stored that, in the context of the Lempel-Ziv coding process, represents the number of bits of the individual decompressed pixels.

Authorized Engineering Information 3-1-1989.

3.8 PERIMETER CODING

For each row of the image, two words shall be sent that describe the number of omitted pixels at the left and the number of omitted pixels at the right. These doublets are sent as the Perimeter Table (0028H,0070H) with the Perimeter Value (substitution value for omitted pixels) in (0028H,0071H).

NEMA Standard 3-1-1989.

3.9 MESSAGE AND GROUP LENGTHS

The use of compression codes that allow a variable number of bits per pixel or per coefficient in the output image causes the length of the output image, and thus the length of the message [(0000H,0001H) and (0008H, 0001H)] and the length of the pixel data group (7FE0H, 0000H) to be unknown until the end of the compression. No changes in treatment of lengths from ACR/NEMA 300 are necessary if the compression precedes transmission. However, it is desirable to allow compression as part of the transmission. For that purpose the Standard permits the use of multiple groups to represent the pixel data, each of which contains a portion of the pixel data of preset length. The number of such groups can be varied according to need.

Table 3-7
ABBREVIATED DATA DICTIONARY, PERIMETER CODING

Group	Element	Name	VR	VT	VM	Type	Definition
0028	0070	Perimeter Table	BI	HX	M	2	Number of pixels omitted at the left and number of pixels omitted at the right of each row. The length of the table is twice the number of rows (0028H,0010H).
0028	0071	Perimeter Value	BI	HX	S	2D	Value to be substituted for omitted pixels; Default = 0

Copyright National Electrical Manufacturers Association
Provided by IHS under license with NEMA
No reproduction or networking permitted without license from IHS
Not for Resale

One method of transmitting the pixel data is using multiple groups. Element (0000H,0002H), variable length, is set to 1 when multiple groups are in use. Elements (0000H,0001H) and (0008H,0001H) are set equal to the uncompressed lengths. Groups 7F00H through 7FFFH are assigned to pixel data, with the 32 groups 7F00H, 7F08H, etc., through 7FF8H being the standard groups. Element (0028H,0200H), image location, is set to the first group number used, usually 7F00H. Within each pixel data group, element (7FXXH, 0000H) is preset to an appropriate length, and element (7FXXH,0010H) contains a portion of the bit stream. Element (7FXXH,0011H) contains the group number that contains the next piece of the pixel data stream. If (7FXXH,0011H) is not present or set to a default of 0, the end of the pixel data has been found. Because S-transform, Pyramid transform, and DCT are inherently segmented, it is expected that this method will be used only with DPCM.

Authorized Engineering Information 3-1-1989.

3.10 COMPRESSION OF OVERLAYS

Overlays stored separately from pixels are compressed in a way analogous to pixels; no transformations are allowed, only coding. Elements 0060H through 0069H and 0800H through 0804H in the overlay groups 6000H–601EH carry the compression description. Element (60xxH,0069H), bits grouped, if used, gives the number of bits to be considered as one entity to apply the coding procedure.

If the image to be compressed has pixels and overlays stored together, as shown in Appendix E of ACR/NEMA 300, (0028H,0069H), bits grouped, allows the inclusions of the overlay with the pixel for compression purposes.

NEMA Standard 3-1-1989.

If (0028H,0069H) is set equal to (0028H,0100H), bits allocated, then pixel and overlay together are to be treated as a pixel value to be transformed and coded. The decompressed version would then have pixels and overlay in the original packed form. The amount of compression for such a scheme is likely to be less than that obtained by compressing pixels and overlays separately.

Authorized Engineering Information 3-1-1989.

Table 3-8
ABBREVIATED DATA DICTIONARY – VARIABLE LENGTHS

Group	Element	Name	VR	VT	VM	Type	Default	Definition
0000	0002	Variable Length	BI	HX	S	1D	0	Variable length pixel data; 0 = No 1 = Yes.
				For pixel data groups 7F00 through 7FF8:				
7FXX	0000	Group Length	BD	HX	S	1		An even number of bytes from the end of value field to the beginning of the next group.
7FXX	0010	Pixel Data	BI	HX	M	1		A portion of the pixel data stream.
7FXX	0011	Next Pixel Group	BI	HX	S	1D	0	Group number containing next piece of pixel stream. If 0, this group had last piece.

Copyright National Electrical Manufacturers Association
Provided by IHS under license with NEMA
No reproduction or networking permitted without license from IHS
Not for Resale

Table 3-9
ABBREVIATED DATA DICTIONARY, OVERLAYS

Group	Element	Name	VR	VT	VM	Type	Definition
60xx	0060	Compression Code	AT	EV	S	1	Class of compression scheme: NONE, DEF, CONT, IMP, or PROP.
60xx	0061	Compression Originator	AT	FF	S	1D	Label of device that is the origin of the compression procedure (ex: NMR 3). Default = (0008H, 1010H).
60xx	0062	Compression Label	AT	FF	S	3	Label of compression procedure (ex: DPCM V1.0).
60xx	0063	Compression Description	AT	FF	S	3	Description of compression procedure (ex: 2-D LINEAR PREDICTOR, HUFFMAN CODING).
60xx	0066	Compression Step Pointers	BI	HX	M	2D	Pointers to the location of each compression operation; Default = (60xxH, 0800H).
60xx	0068	Repeat Interval	BI	HX	S	2D	Number of bits between those given as actual.
60xx	0069	Bits Grouped	BI	HX	S	2D	Number of bits grouped together as one value to be compressed; Default = 1.
60xx	0800	Code Label	AT	EV	M	2	Label of coding operation. Choices: HUFFMAN SHIFT ESCAPE RUN_LENGTH LEMPEL_ZIV
60xx	0802	Number of Tables	BI	HX	S	2D	Number of code tables; Default = 1.
60xx	0803	Code Table Location	BI	HX	M	2D	Group and element numbers of first code table; Default = (1000H, 0010H).
60xx	0804	Number of Bits for Code Word	BI	HX	S	2D	Number of bits per Lempel-Ziv code word; Default = 1.
0028	0069	Bits Grouped	BI	HX	S	2D	Number of bits grouped together as one pixel for compression; Default = (0028H, 0101H).

Copyright National Electrical Manufacturers Association
Provided by IHS under license with NEMA
No reproduction or networking permitted without license from IHS

Not for Resale

Section 4
COMMAND STRUCTURE

A device that supports this data compression standard shall implement the following additional status codes as valid responses in a SEND_RESPONSE command:

Table 4-1
STATUS CODES

Refused	
A400	The receiver does not support image compression.
A401	The receiver does not support this type of compression.
A410	IMPlied compression is not found.
A411	PROPrietary compression is not understood.
A412	DEFined or CONTained compression procedure not understood, incorrect, or incomplete.
A413	Sender is not the originator of DEFined compression.
Failed	
C400	Unspecified error in decompression process.

NEMA Standard 3-1-1989.

The status Code A413 may or may not represent an error, a decision that is left to the implementor. When an image is sent across the interface, ACR/NEMA 300 specifies that a status code element (0000H,0900H) should be returned in a command response to indicate success, failure, or difficulty. In particular, if a compressed image is sent across the interface and the receiver does not support compression, the status code value A400 should be returned in the SEND_RESPONSE. These supplemental codes will indicate particular problems with the decompression process.

Authorized Engineering Information 3-1-1989.

Copyright National Electrical Manufacturers Association
Provided by IHS under license with NEMA
No reproduction or networking permitted without license from IHS
Not for Resale

Section 5
EXAMPLES OF SEVERAL TYPES OF COMPRESSION

5.1 DPCM

The error E(i,j) is calculated using as a predictor the preceding pixel. The result is then Huffman-coded with a 9-element table and an escape code.

The original data are, in decimal,

100	101	102	102	110
100	98	102	120	100

Referring to equation (1) of 2.1.1 for m = 1, n = 3, a(0,–1) = 1, a(0,0) = 0, a(0,1) = 0

$$P'(i,j) = P(i,j-1)$$

and with equation (2),

$$E(i,j) = P(i,j) - P(i,j-1)$$

The assumption is made that all values outside the image are 0; i.e., P(i,j) = 0 for i or j less than 0.

The resulting E(i,j) is

100	1	1	0	8
100	–2	4	18	–20

5.1.1 Escape Code and Huffman Table

The escape code and the Huffman table are:

Number represented	Representation in binary
escape code	000000
–4	000011
–3	00011
–2	0011
–1	011
0	1
1	010
2	0010
3	00010
4	000010

The elements, defined for this example and special for compression, are:

Group	Element	Value		Meaning	Description
0028	0010	0002		2	number of rows
0028	0011	0005		5	number of columns
0028	005F	4341 454E 3120	2052 414D 302E	"ACR/NEMA 1.0"	Compression recognition code
0028	0060	4544	2046	"DEF"	type of compression
0028	0061	5443	3230	"CT02"	compression originator
0028	0062	5443 4154 5241	5320 444E 2044	"CT STANDARD"	compression label
0028	0063	5044 4820 4D46	4D43 4655 4E41	"DPCM HUFFMAN"	compression description
0028	0065	5044 435C 2045	4D43 444F	"DPCM\CODE"	sequence
0028	0066	0028 0028	0080 0800	(0028H,0080H) (0028H,0800H)	pointers
0028	0080	0001		1	number of rows in predictor
0028	0081	0003		3	number of columns in predictor
0028	0082	0001 0000	0000	1,0,0	

Copyright National Electrical Manufacturers Association
Provided by IHS under license with NEMA
No reproduction or networking permitted without license from IHS
Not for Resale

Group	Element	Value			Meaning	Description
0028	0100	0010			16	bits stored
0028	0101	000C			12	bits allocated
0028	0800	5548 414D 4550	4646 5C4E		"HUFFMAN\ESCAPE"	Label of coding operation
0028	0802	0001			1	number of code tables (default – may be omitted)
0028	0803	1000	0010		(1000H,0010H)	Code table location (default – may be omitted)
1000	0000	0056	0000		86	group length
1000	0010	000C	0006	0000	12,6,0	first escape code triplet
1000	0012	0009			9	Huffman Table size
1000	0013					Huffman Table
		FFFC	0006	0003	–4,6,3	000011 = –4
		FFFD	0005	0003	–3,5,3	00011 = –3
		FFFE	0004	0003	–2,4,3	0011 = –2
		FFFF	0003	0003	–1,3,3	011 = –1
		0000	0001	0001	0,1,1	1 = 0
		0001	0003	0002	1,3,2	010 = 1
		0002	0004	0002	2,4,2	0010 = 2
		0003	0005	0002	3,5,2	00010 = 3
		0004	0006	0002	4,6,2	000010 = 4
7FE0	0000	0016	0000		22	group length
7FE0	0010	0019 0100 8400 FD80	1280 0321 0901			data stream of pixels

The data stream of pixels, broken into corresponding bits, is:

000000 000001100100		010	010	1	000000 000000001000
000000 000001100100		0011	000010	000000 000000010010	000000 111111101100

The bit stream is formed into 16 bit words by inserting the first code into the high order bits, followed by the next code. Any remaining bits after the 16th bit enter the high order bits of the next word.

5.1.2 Repeat Interval

If example 5.1.1 is modified by using a repeat interval, the escape code is not necessary for the elements where this appears. If (0028H,0068H) = 5, then the following is added to example 5.1.1:

Group	Element	Value			Meaning	Description
0028	0068	0005		5		repeat interval – in this case, the same as the number of pixels in a row
7FE0	0000	0014	0000	20		Group length
7FE0	0010	0644 4032 0091	A000 1840 FD80			Stream of pixels

Copyright National Electrical Manufacturers Association
Provided by IHS under license with NEMA
No reproduction or networking permitted without license from IHS
Not for Resale

Expressed as a stream of codes, (7FE0H,0010H) becomes:

000001100100	010	010	1	000000 000000001000
000001100100	0011	000010	000000 000000010010	000000 111111101100

5.1.3 Huffman Plus Shift Codes

Shift codes add a number to the error value to be represented to move it within the range of the Huffman table. In this example, two codes are added to add and subtract 9. Use of one of these codes twice in sequence would change the number by 18. The following elements are changed from or added to those from Example 5.1.2:

Group	Element	Value		Meaning	Description
0028	0063	5044 4820 4D46 5320 5446	4D43 4655 4E41 4948	"DPCM HUFFMAN SHIFT"	compression description
0028	0065	5044 435C 2045	4D43 444F	"DPCM\CODE"	sequence
0028	0066	0028 0028	0080 0800	(0028H,0080H) (0028H,0800H)	pointers
0028	0068	0005		5	repeat interval
0028	0800	5548 414D 4853 5345 4143	4646 5C4E 5C54 4550	"HUFFMAN\SHIFT \ESCAPE"	label of shift table
0028	0803	1000	0010	(1000H,0010H)	pointer
1000	0013	0009 0003	0007	9,7,0000011	upshift added to number to be represented
		FFF7 0002	0007	–9,7,0000010	downshift added to number to be represented
7FE0	0000	0014	0000	20	group length
7FE0	0010	0644 3218 4183	A098 4081 3000		pixel stream

Expressed as the stream of codes, (7FE0H,0010H) is:

000001100100	010	010	1	0000010 011
000001100100	0011	000010	0000010 0000010 1	0000011 0000011 0011

The escape code could have been used instead of the multiple shifts.

Copyright National Electrical Manufacturers Association
Provided by IHS under license with NEMA
No reproduction or networking permitted without license from IHS
Not for Resale

5.1.4 Different Huffman Table and Multiple Shifts

Group	Element		Value		Meaning	Description
0028	0062	5443 5345	5420 2054		"CT TEST"	label for compression method
0028	0068	0005			5	repeat interval
0028	0800	5548 414D 4649 5345 4550	4646 5C4E 5654 4143		"HUFFMAN\SHIFT\ ESCAPE"	table name
1000	0000	00A8			168	group length
1000	0010	000C	0004	000E	12,4,E	1110 = escape code
1000	0012	000D			13	Number of entries in Huffman Table
1000	0013					Huffman Table
		FFFA	0004	0001	–6,4,1	0001 = –6
		FFFB	0004	0002	–5,4,2	0010 = –5
		FFFC	0004	0003	–4,4,3	0011 = –4
		FFFD	0004	0004	–3,4,4	0100 = –3
		FFFE	0004	0005	–2,4,5	0101 = –2
		FFFF	0004	0006	–1,4,6	0110 = –1
		0000	0004	0007	0,4,7	0111 = 0
		0001	0004	0008	1,4,8	1000 = 1
		0002	0004	0009	2,4,9	1001 = 2
		0003	0004	000A	3,4,A	1010 = 3
		0004	0004	000B	4,4,B	1011 = 4
		0005	0004	000C	5,4,C	1100 = 5
		0006	0004	000D	6,4,D	1101 = 6
1000	0014	0008			8	Number of entries in Shift Table
1000	0015					Shift Table
		0034	0008	000F	52,8,0F	00001111 = +52
		0027	0008	000E	39,8,0E	00001110 = +39
		001A	0008	0000	26,8,0B	00000000 = +26
		000D	0004	000A	13,8,0A	00001010 = +13
		FFF3	0004	00FA	–13,8,FA	11111010 = –13
		FFE6	0008	00FF	–26,8,FF	11111111 = –26
		FFD9	0008	00FE	–39,8,FE	11111110 = –39
		FFCC	0008	00F0	–52,8,F0	11110000 = –52
7FE0	0000	0012	0000		18	group length
7FE0	0010	0648 0645 00AD	87F2 BFAC			pixel stream

Expressed as a stream of codes, (7FE0H,0010H) becomes:

000001100100	1000	1000	0111	1111 0010
000001100100	0101	1011	11111010 1100	00000000 0001

Copyright National Electrical Manufacturers Association
Provided by IHS under license with NEMA
No reproduction or networking permitted without license from IHS
Not for Resale

5.1.5 Implied Compression

If (0028H,0060H) is IMPlied, then none of the compression specific elements in group 0028H with element number greater than 0063H is present. Similarly, group 1000H is completely omitted. The result in (7FE0H,0010H) is the same as for example 5.1.4 under this condition. The compression-specific elements then are:

Group	Element	Value		Meaning	Description
0028	0060	4D49	2050	"IMP"	type of compression
0028	0061	5443	3230	"CT02"	responsible device
0028	0062	5443 5345	5420 2054	"CT TEST"	compression procedure
0028	0063	5044 4820 4D46 5320 5446	4D43 4655 4E41 4948	"DPCM HUFFMAN SHIFT"	
7FE0	0000	0012	0000	18	group length
7FE0	0010	0648 0645 00AD	87F2 BFAC		same pixel stream as example 5.1.4

5.1.6 Huffman and Run Length Encoding

Consider Example 5.1.1 (with only a 9-element Huffman table and an escape code) with a run length code (1000H,0011H) as well. Although this use would not make sense for this example, a run does exist in the data.

Group	Element	Value		Meaning	Description
0028	0800	5548 414D 4853 5C54 4143 525C 4C5F 5447	4646 5C4E 4649 5345 4550 4E55 4E45 2048		"HUFFMAN\SHIFT\ESCAPE\RUN_LENGTH"
1000	0011	0008 0003	0007	8,7,3	following the run length code of 0000011 is an 8-bit repetition count
7FE0	0000	0018	0000	24	group length
7FE0	0010	0019 1800 3218 901F	1030 1000 4000 D800		

The data stream of pixels is:

000000 000001100100	010	0000011 00000001	1		000000 000000001000
000000 000001100100	0011	000010	000000 000000010010		000000 11111110110

5.1.7 DPCM—HUFFMAN with Realistic Images

DPCM and Huffman codes typically give compression ratios between 2 and 4 when implemented on medical images in a bit-preserving way. The exact ratio depends upon the detail of the image and how well the table matches the frequency of occurrence of the various pixel values.

Copyright National Electrical Manufacturers Association
Provided by IHS under license with NEMA
No reproduction or networking permitted without license from IHS
Not for Resale

5.2 EXAMPLES OF DCT COMPRESSED IMAGE DATA

The following data would represent a single 8×8 block from a larger image. The original block and its discrete cosine transform are:

Original Data:

710	719	723	739	492	210	91	56
706	714	729	679	430	179	132	82
712	726	751	614	410	284	196	124
722	744	764	564	413	399	280	180
687	701	632	427	255	281	205	131
659	666	513	306	127	236	196	90
641	619	410	213	89	188	161	69
623	525	331	144	67	164	138	54

DCT Coefficients:

806.9	433.7	11.6	–23.5	–43.5	17.4	3.9	–12.1
151.3	55.7	–121.6	–51.4	49.7	5.6	–7.1	9.2
–74.9	10.6	1.2	7.5	30.1	0	–14.5	–1.7
–11.4	12.4	1.2	–4.5	0.2	–0.8	–6.3	–8.9
16.3	–7.7	–10.0	7.3	3.3	–3.0	6.4	1.6
23.2	–4.2	–6.2	5.8	–5.9	–3.3	2.6	–1.8
–3.8	–1.4	0	2.9	–2.0	1.4	2.5	2.0
–11.1	5.2	1.1	–1.8	3.7	–2.4	–0.9	–0.6

The transmitter might elect to normalize the block to a DC coefficient of 127 and omit (zero) any coefficients with a magnitude less than 2. The normalization factor will be 6.354 (decimal), and the coefficients to be transmitted:

127	68	2	–4	–7	3	0	–2
24	9	–19	–8	7	0	0	0
–12	2	0	0	5	0	–2	0
–2	2	0	0	0	0	0	0
3	0	–2	0	0	0	0	0
4	0	0	0	0	0	0	0
0	0	0	0	0	0	0	0
–2	0	0	0	0	0	0	0

This block, when decoded, inverse transformed, and normalized by the receiver, will reproduce the original data block with approximately 2 percent rms error.

Two examples follow. The first example will employ enumerated zonal mapping. The second example will employ adaptive mapping and Huffman coding.

Copyright National Electrical Manufacturers Association
Provided by IHS under license with NEMA
No reproduction or networking permitted without license from IHS
Not for Resale

5.2.1 Example of Zonal Mapping

The transmitter would select a zonal map appropriate for the particular coefficient block. For this data block, the transmitter might select the following zonal map:

8	8	6	5	4	4	3	3
8	6	6	5	4	4	3	0
6	6	5	5	4	3	3	0
5	5	5	4	3	3	0	0
4	4	4	3	3	0	0	0
4	4	3	3	0	0	0	0
3	3	3	0	0	0	0	0
3	0	0	0	0	0	0	0

This map will give the number of bits allocated to each coefficient, totalling 178 bits, giving a compression ratio of 3.6 to 1. The message (fragment) for this block is:

Group	Element	Value		Meaning	Description
0028	0065	4344	2054	"DCT"	Compression sequence
0028	0066	0028	0700	(0028H,0700H)	Pointers to operations
0028	0700	4344	2054	"DCT V1.0"	Label of DCT
		3156	302E		
0028	0701	4F4E	4D52	"NORM_FACTOR\	Data Block Description
		465F	4341	ZONAL_ENUM"	
		4F54	5C52		
		4F5A	414E		
		5F4C	4E45		
		4D55			
0028	0702	0028	0710	(0028H,0710H)	Pointers to data block descriptors
		0028	0720	(0028H,0720H)	
0028	0710	0010	000C	16,12	Normalization factor format: 16 bits in norm. factor; 12 bits to right of decimal
0028	0720	0004		4	Four bits for zonal map number in data block
0028	0721	1010	0004	(1010H,0004H)	Location of zonal map
0028	0722	0004		4	Four bits per zonal map entry
1010	0004	8865	4433		Zonal map number 1
		8665	4430		
		6655	4330		
		5554	3300		
		4443	3000		
		4433	0000		
		3330	0000		
		3000	0000		
		and so on for remaining zonal maps			
		.			
		.			
Note: The following data is not organized into words, for clarity.					
7FE0	0010	65AA	6.354		Normalization factor as defined in (0028H,0710H)
		1	1		Zonal map number as 4 bits

Copyright National Electrical Manufacturers Association
Provided by IHS under license with NEMA
No reproduction or networking permitted without license from IHS

Not for Resale

Transformed data, stored with bit allocation per (1010H,0004H). The pattern is shown in binary presentation:

01111111	01000100	000010	11011	1000	0011	000	110
00011000	001001	101101	11000	0111	0000	000	
110100	000010	00000	00000	0101	000	110	
11110	00010	00000	0000	000	000		
0011	0000	1110	000	000			
0100	0000	000	000				
000	000	000					
110							

5.2.2 Example of Adaptive Mapping and Huffman Coding

The transmitter will perform the same normalization and thresholding as Example 5.2.1, but will send an adaptive map with the data and will Huffman code the coefficients. This coding will result in 149 bits in the data block.

Group	Element		Value	Meaning	Description
0028	0065	4344	5C54	"DCT\CODE"	Compression sequence
		4F43	4544		
0028	0066	0028	0700	(0028H,0700H)	Pointers to operations
		0028	0800	(0028H,0800H)	
0028	0700	4344	2054	"DCT V2.0"	Label of DCT Operation
		3156	302E		
0028	0701	4F4E	4D52	"NORM FACTOR\	Data block description
		465F	4341	ADAPTIVE_MAP\	
		4F54	5C52	HUFFMAN_ENUM"	
		4441	5041		
		4954	4556		
		4D5F	5041		
		485C	4655		
		4D46	4E41		
		455F	554E		
		204D			
0028	0702	0028	0710	(0028H,0710H)	Pointers to data block descriptors
		0028	0730	(0028H,0730H)	
		0028	0740	(0028H,0740H)	
0028	0710	0010	000C	16,12	Normalization factor format: 16 bits in factor, 12 bits to right of decimal
0028	0730	0004		4	Number of bits for adaptive map runs
0028	0740	0004		4	Number of bits for Huffman table number
0028	0800	5548	4646	"HUFF01"	Label of Huffman coding operation
0028	0802	000F		15	There are 15 Huffman tables
0028	0803	1000	0010	(1000H,0010H)	Location of first Huffman table

The transmitter indicates that 15 Huffman code tables are contained in group 1000. Only the first table is shown.

1000	0010	0008	0001	0001	Eight bits in signed actual value, one bit for escape code, escape code = 1
1000	0012	0007		7	There are 7 code triplets
1000	0013	0004	0005	000E	+4 is represented by 5 bits =01110
		0003	0005	000C	+3 is represented by 5 bits =01100

Copyright National Electrical Manufacturers Association
Provided by IHS under license with NEMA
No reproduction or networking permitted without license from IHS
Not for Resale

Group	Element	Value	Meaning	Description
		0002 0003 0001	+2 is represented by 3 bits =001	
		0000 0003 0000	0 is represented by 3 bits =000	
		FFFE 0003 0002	–2 is represented by 3 bits =010	
		FFFD 0005 000D	–3 is represented by 5 bits =01101	
		FFFC 0005 000F	–4 is represented by 5 bits =01111	
		and so on for fourteen other Huffman code tables		
7FE0	0010	65AA	6.354	Normalization factor as defined in (0028H,0710H)
		8572		Adaptive map runs.
		3101		The number of pixels per row that are transmitted (non- zero) starting from the left. Sent as 4 bits per run according to (0028H, 0730H)
		1		Huffman map number, in 4 bit format according to (0028H,0740H)

Coded data. Shown below in binary for clarity.

101111111	101000100	001	01111	111111001	01100	000	010
100011000	100001001	111101101	111111000	100001000			
111110100	001	000	000	100000101	000	010	
010	001						
01100	000	010					
01110							
010							

Authorized Engineering Information 3-1-1989.

5.3 EXAMPLES OF S-TRANSFORMED DATA SETS

5.3.1 Numerical Example

The original data set consists of an 8×8 matrix:

710	719	723	739	492	210	91	56
706	714	729	679	430	179	132	82
712	726	751	614	410	284	196	124
722	744	764	564	413	399	280	180
687	701	632	427	255	281	205	131
659	666	513	306	127	236	196	90
641	619	410	213	89	188	161	69
623	525	331	144	67	164	138	54

Copyright National Electrical Manufacturers Association
Provided by IHS under license with NEMA
No reproduction or networking permitted without license from IHS
Not for Resale

With an 8×8 matrix, the S-transform can be executed up to three times. The coefficients of the three stages are:

Step 1

DV1:	9	54	93	–67
	–28	37	–118	–140
	63	240	173	50
	112	148	46	38
DH1:	–17	34	533	85
	–36	337	140	172
	–21	412	–135	180
	120	384	–196	176
DD1:	–1	–66	31	–15
	8	–63	112	–28
	–7	–2	83	–32
	–76	10	–2	8

Step 2

DV2:	31	–154
	271	148
DH2:	47	420
	535	90
DD2:	–59	56
	–119	48

Step 3

DV3:	295
DH3:	811
DD3:	107
S3:	404

The coefficients of this example appear to be independent of each other, and their histogram distribution is practically flat. For instance, among the groups of difference coefficients of the first step, only two values of the DD1 coefficients occur twice; i.e., for statistical compression techniques, the example is ill-suited. If the Huffman coding method were to be applied, the code tables would either be relatively long with disproportionately extended codes or would have constant word length. For "real" images, histogram distributions are typically sharply peaked, and the data volume of the tables is small compared to the volume of the coded image data. This is demonstrated in the following example of coding a medical image.

For completing this numerical example, it is nevertheless assumed that the transform coefficients are coded by Huffman codes.

Group 0028
Image Presentation Information for Numerical Example of an S-transformed Image Data Set

Group	Element	Value		Meaning	Description
0028	0010	0008		8	rows
0028	0011	0008		8	columns
0028	0060	4544	2046	"DEF"	class of compression
0028	0061	4D4D 2003	5357	"MMWS3"	device being the origin of the compression procedure (Multi-modality Workstation 3)
0028	0062	5F53 4E41 524F 2E31	5254 4653 204D 2032	"S_TRANSFORM 1.2"	label of compression procedure
0028	0063	5F53 4E41 524F 5548 414D	5254 4653 5C4D 4646 204E	"S_TRANSFORM\ HUFFMAN"	description of compression procedure
0028	0065	5F53 4E41 5548 414D	5254 5C53 4646 204E	"S_TRANS\ HUFFMAN"	sequence of compression operation in order of transmitter
0028	0066	0028 0028	0400 0800	(0028H,0400H) (0028H,0800H)	pointers to the location of each compression operation, i.e. S-transform and Huffman coding

Copyright National Electrical Manufacturers Association
Provided by IHS under license with NEMA
No reproduction or networking permitted without license from IHS
Not for Resale

Group	Element	Value		Meaning	Description
0028	0100	0010		16	maximum number of bits allocated per pixel
0028	0101	0010		16	number of bits per pixel in the original, uncompressed image
0028	0102	000A		10	most significant bit for pixel data
0028	0400	5F53 4E41 524F	5254 4653 204D	"S_TRANSFORM"	label of operation
0028	0401	2E31	2032	"1.2"	S-transform version
0028	0402	0003		3	number of transformation steps that have been executed
0028	0403	4648 5C33 4453 485C 4844 4648 3344 5346 5C32 4453 485C 4444 4648 3156 5346 5C31 4453	5353 4648 3356 5346 5C33 4453 485C 5644 4648 3248 5346 5C32 4453 485C 4844 4648 3144	"HFSS3\HFSDV3\ HFSDH3\HFSDD3\ HFSDV2\HFSDH2\ HFSDD2\HFSDV1\ HFSDH1\HFSDD1"	sequence in which coded data are transmitted
0028	0404	0028 0028 0028	0410 0420 0430	(0028H,0410H) (0028H,0420H) (0028H,0430H)	pointers to element numbers for details on coefficients of each transform step
0028	0405	7FE0 7FE0 7FE0	0010 0020 0030	(7FE0H,0010H) (7FE0H,0020H) (7FE0H,0030H)	pointers to coded coefficient data
0028	0410	0001		1	number of rows in basic image and in subsection of third difference coefficients
0028	0411	0001		1	number of columns in basic image and in subsection of third difference coefficients
0028	0412	5548 414D 5C5F	4646 5C4E	"HUFFMAN_\"	coding scheme used for coefficients of third transform step in order of (0028H,0403H)
0028	0413	0028	0800	(0028H,0800H)	pointer to coding scheme for each coefficient employed in (0028H,0412H)
0028	0420	0002		2	number of rows in subsection of second difference coefficients
0028	0421	0002		2	number of columns in subsection of second difference coefficients

Copyright National Electrical Manufacturers Association
Provided by IHS under license with NEMA
No reproduction or networking permitted without license from IHS
Not for Resale

Group	Element	Value		Meaning	Description
0028	0422	5548 414D 5C5F	4646 5C4E	"HUFFMAN_\"	coding scheme used for coefficients of second transform step in order of (0028H,0403H)
0028	0423	0028	0810	(0028H,0810H)	pointer to coding scheme for each coefficient employed in (0028H,0422H)
0028	0430	0004		4	number of rows in subsection of first difference coefficients
0028	0431	0004		4	number of columns in subsection of first difference coefficients
0028	0432	5548 414D 5C5F	4646 5C4E	"HUFFMAN_\"	coding scheme used for coefficients of first transform step in order of (0028H,0403H)
0028	0433	0028	0820	(0028H,0820H)	pointer to coding scheme for each coefficient employed in (0028H,0432H)
0028	0800	5548 414D 2031	4646 204E	"HUFFMAN 1"	specifies which coding scheme and version is employed for the coefficients listed in the following element
0028	0801	4648 5C33 4453 485C 4844 4648 3344	5353 4648 3356 5346 5C33 4453	"HFSS3\HFSDV3\ HFSDH3\HFSDD3"	coefficients for which the code table is listed in Element (0028H,0803H)
0028	0803	1000	0013	(1000H,0013H)	pointer to code table for HFSS3, HFSDV3, HFSDH3, HFSDD3, HFSDV2, HFSDH2, HFSDD2, HFSDV1, HFSDH1, HFSDD1
0028	0808	7FE0 7FE0 7FE0 7FE0	0010 0020 0030 0040	(7FE0H,0010H) (7FE0H,0020H) (7FE0H,0030H) (7FE0H,0040H)	group and elements containing coded basic image HFS3 and difference coefficients HFSDV3, HFSDH3, HFSDD3
0028	0810	5548 414D 2031	4646 204E	"HUFFMAN 1"	specifies which coding scheme and version is employed for the coefficients listed in the following element
0028	0811	4648 3256 5346 5C32 4453	4453 485C 4844 4648 3244	"HFSDV2\HFSDH2\ HFSDD2"	coefficients for which the code table is listed in Element (0028H,0803H)
0028	0818	7FE0 7FE0 7FE0	0050 0060 0070	(7FE0H,0050H) (7FE0H,0070H) (7FE0H,0060H)	group and elements containing difference coefficients HFSDV2,HFSDH2,HFSDD2
0028	0820	5548 414D 2031	4646 204E	"HUFFMAN 1"	specifies which coding scheme and version is employed for the coefficients listed in the following element

Copyright National Electrical Manufacturers Association
Provided by IHS under license with NEMA
No reproduction or networking permitted without license from IHS
Not for Resale

Group	Element	Value		Meaning	Description
0028	0821	4648 3156 5346 5C31 4453	4453 485C 4844 4648 3144	"HFSDV1\HFSDH1\ HFSDD1"	coefficients for which the code table is listed in Element (0028H,0803H)
0028	0828	7FE0 7FE0 7FE0	0080 0090 00A0	(7FE0H,0080H) (7FE0H,0090H) (7FE0H,00A0H)	group and elements containing difference coefficients HFSDV1, HFSDH1, HFSDD1

The code for the S-transform coefficients employed here is a single Huffman code table. The S-transformed 8×8 matrix is represented by a total of 63 difference coefficients and one sum coefficient. Six values (–28, –2, 8, 31, 112, 148) occur twice. For the sake of this illustration, these values have been represented by a variable-length Huffman code. The other 51 values are transmitted by their actual signed 10 bit value following the escape code.

Group	Element	Value		Meaning	Description
1000	0010	000B 0001	0001	11,1,1	Escape triplet: value bits, number of escape code bits, escape code
1000	0012	0006		6	number of data triplets in Huffman code table
1000	0013	FFFE 0008 FFE4 001F 0070 0094	0003 0003 0004 0004 0004 0004	0001 0000 0007 0006 0005 0004	–2,3,001 8,3,000 –28,4,0111 31,4,0110 112,4,0101 148,4,0100	Huffman table triplets: Value, bits for value, code for value

For the pixel values appearing in group 7FE0, the binary words or actual bits are shown in the following list.

Group	Element	Value	Meaning	Description
7FE0	0010	100110010100		SS3
7FE0	0020	100100100111		SDV3
7FE0	0030	101100101011		SDH3
7FE0	0040	100001101011		SDD3
7FE0	0050	0110,110101100110,100100001111,0100		SDV2
7FE0	0060	100000101111,100110100100,101000100001, 100001011010		SDH2
7FE0	0070	110100101101,100000111000, 110010001001, 100000110000		SDD2
7FE0	0080	100000001001,100000110110, 100001011101, 110010111101, 0111,100000100101,110010001001, 110101110011, 100000111111, 100011110000, 100010101101, 100000110010,100001110000, 0100, 100000101110,100000100110		SDV1
7FE0	0090	110000101111, 100000100010, 101000010101, 100001010101, 110001011011, 100101010001, 100010001100, 100010101100, 110000101011, 100110011100, 110101111001, 100010110100, 100001111000, 100110000000, 110100111011, 100010110000		SDH1
7FE0	00A0	111111111111, 110010111101, 0110, 110000010001, 000, 110001000000, 0101, 0111, 110000001001, 001, 100001010011, 110001111111, 110010110011, 100000001010, 001, 000		SDD1

Copyright National Electrical Manufacturers Association
Provided by IHS under license with NEMA
No reproduction or networking permitted without license from IHS
Not for Resale

5.3.2 Example for Huffman-coding of a Medical Image after S-transformation

The original image was a cerebral angiogram on a 30 cm×30 cm x-ray film. The film was digitized to a 1024×1024×8 bit image matrix. The digital data were subjected to four S-transformation steps. The difference coefficients were coded by a variable-length Huffman code. The last sum coefficients were represented by their actual binary value. No limitation to the coded word size was imposed. A compression ratio of about 2.5 was obtained, not counting the code tables. If the tables were to be coded in a most straight-forward fashion and by assigning four or five bytes each to every table entry, the total table data volume would be less than 1 percent of the compressed image data volume.

Figure 5-1 shows the histograms of the first sum and difference coefficients. Similar histograms were found for the sum and difference coefficients of the subsequent transform steps.

Table 5-1 presents the Huffman code table for the first horizontal difference coefficients as an example.

Table 5-2 lists image size, length of Huffman code tables, average word length, required storage volume for coded coefficients, and achieved cumulative compression ratio for each transform step.

The following nomenclature has been used:

Sn: sum coefficients
DHn: horizontal difference coefficients
DVn: vertical difference coefficients
DDn: diagonal difference coefficients.

Authorized Engineering Information 3-1-1989.

Table 5-1
Huffman Code Table for Coefficients DH1

I: running index of transform coefficients after re-arrangement in order of decreasing probability
P(I): probability of occurrence of coefficient in percent
V(I): represented value
L(I): number of bits
H(I): Huffman code

I	P(I)	V(I)	L(I)	H(I)	I	P(I)	V(I)	L(I)	H(I)
1	36.227	0	2	00	33	0.013	16	13	1111000010110
2	9.266	–1	3	101	34	0.008	–17	13	1111001010101
3	9.194	1	3	110	35	0.007	18	13	1111001011011
4	7.687	–2	4	0100	36	0.006	19	14	11110000101111
5	7.502	2	4	0101	37	0.006	–18	14	11110000111001
6	5.736	–3	4	0111	38	0.005	–20	14	11110000111011
7	5.421	3	4	1000	39	0.004	17	14	11110010101001
8	3.891	–4	4	1110	40	0.003	–19	15	111100001011100
9	3.638	4	5	01100	41	0.003	20	15	111100001110000
10	2.505	–5	5	10010	42	0.003	–24	15	111100001110100
11	2.302	5	5	10011	43	0.003	22	15	111100001110101
12	1.460	–6	6	011010	44	0.002	–25	15	111100101010000
13	1.370	6	6	011011	45	0.002	–29	15	111100101101001
14	0.799	–7	6	111110	46	0.002	–23	15	111100101101010
15	0.792	7	6	111111	47	0.002	–22	15	111100101101011
16	0.466	–8	7	1111010	48	0.002	21	16	1111000010111010
17	0.457	8	7	1111011	49	0.002	–21	16	1111000010111011
18	0.245	9	8	11110011	50	0.001	–28	16	1111001011010000
19	0.240	–9	9	111100000	51	0.001	–27	16	1111001011010001
20	0.153	10	9	111100011	52	0.001	–26	16	1111001010100010
21	0.152	–10	9	111100100	53	0.000	–49	17	11110010101000111
22	0.087	11	10	1111000100	54	0.000	–34	18	111100101010001100
23	0.080	–11	10	1111000101	55	0.000	–33	18	111100101010001101
24	0.058	–12	11	11110000100	56	0.000	23	18	111100001110001010
25	0.053	12	11	11110000110	57	0.000	24	18	111100001110001011
26	0.035	–13	11	11110010100	58	0.000	25	18	111100001110001000
27	0.029	13	11	11110010111	59	0.000	27	18	111100001110001001
28	0.017	14	12	111100001111	60	0.000	31	18	111100001110001110
29	0.015	–14	12	111100101011	61	0.000	36	18	111100001110001111
30	0.015	–15	12	111100101100	62	0.000	38	18	111100001110001100
31	0.014	15	13	1111000010100	63	0.000	40	18	111100001110001101
32	0.013	–16	13	1111000010101					

Copyright National Electrical Manufacturers Association
Provided by IHS under license with NEMA
No reproduction or networking permitted without license from IHS
Not for Resale

Table 5-2
SUMMARY OF TRANSFORMATION AND CODING OF CEREBRAL ANGIOGRAM

Sn: number of pixels in matrix of sum coefficients of step n
CL: average code length of set of coefficients
SV: storage volume for given set of coefficients in bytes
Cn: cumulative compression ratio after n transformation steps
For example, C2 = 1024×1024/[SVDH1 +SVDV1 +SVDD1 +SVDH2 +SVDV2 +SVDD2 +1024×1024/16]
Tn: transform step n
Lt: length of Huffman code table

Tn	Sn	Coef	Lt	CL	SV	Cn
0	1024×1024			8.000	1048576.000	1.000
1		DH1	63	3.365	110272.000	
		DV1	193	3.056	100143.875	
		DD1	52	3.182	104282.125	
	512×512	S1		8.000	262144.000	1.818
2		DH2	135	3.272	26807.750	
		DV2	69	3.148	25789.375	
		DD2	39	3.121	25568.500	
	256×256	S2	8.000		65536.000	2.287
3		DH3	87	3.714	7607.000	
		DV3	94	3.654	7483.375	
		DD3	57	3.418	6999.125	
	128×128	S4		8.000	16384.000	2.431
4		DH4	98	4.349	2226.625	
		DH4	93	4.119	2109.125	
		DD4	76	3.809	1950.250	
	64×64	S4		8.000	4096.000	2.465

Copyright National Electrical Manufacturers Association
Provided by IHS under license with NEMA
No reproduction or networking permitted without license from IHS
Not for Resale

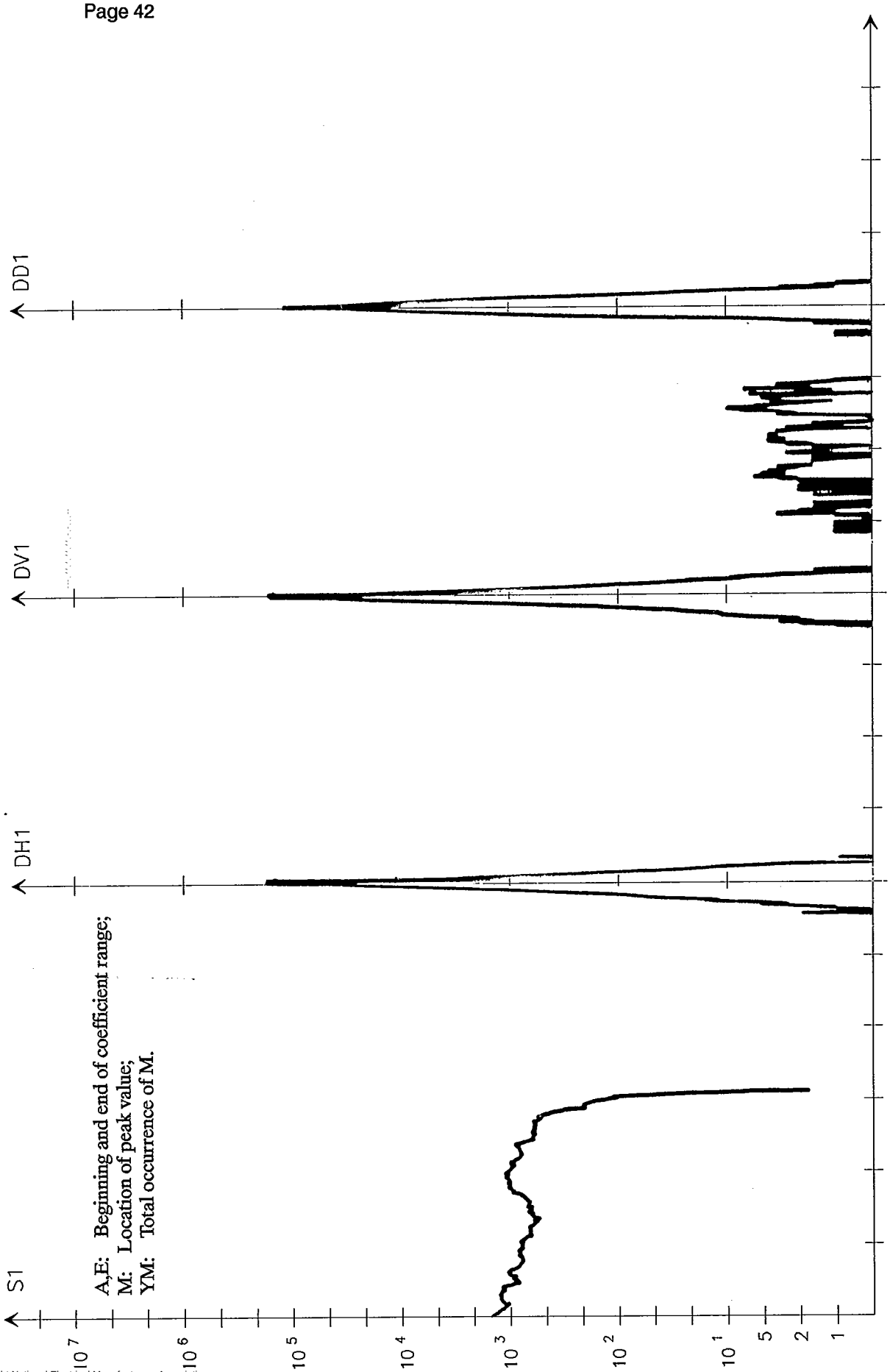

Figure 5-1
HISTOGRAMS OF SUM AND DIFFERENCE COEFFICIENTS OF TRANSFORMATION STEP 1

Copyright National Electrical Manufacturers Association
Provided by IHS under license with NEMA
No reproduction or networking permitted without license from IHS
Not for Resale

5.4 EXAMPLE FOR LEMPEL-ZIV ENCODING

The following 64 "pixel values" are used to illustrate the Lempel-Ziv coding:

1 3 3 3 2 2 1 1 1 2 2 2 3 2 3 2
3 2 1 2 3 3 1 2 2 1 2 2 3 2 2 3
1 2 2 2 2 3 2 2 1 1 2 2 2 2 3 2
3 3 2 2 2 2 2 1 2 2 2 2 2 1 1 2

For their proper binary representation, two-bit words are sufficient. The Lempel-Ziv code for this illustration shall be limited to five bits. Hence, strings for pixels are coded by the third to fifth bit.

	Input String	Prefix Parsed Off	Code Put Out	Extended String Added to Table	Code Assigned
1	1,3,3,3,2..	1	1 = 00001	1,3	00100 = 4
2	..3,3,3,2,2..	3	3 =00011	3,3	00101 = 5
3	..3,3,2,2,1..	3,3	5 =00101	3,3,2	00110 = 6
4	..2,2,1,1,1..	2	2 =00010	2,2	00111 = 7
5	..2,1,1,1,2..	2	2 =00010	2,1	01000 = 8
6	..1,1,1,2,2..	1	1 =00001	1,1	01001 = 9
7	..1,1,2,2,2..	1,1	9 =01001	1,1,2	01010 = 10
8	..2,2,2,3,2..	2,2	7 =00111	2,2,2	01011 = 11
9	..2,3,2,3,2..	2	2 =00010	2,3	01100 = 12
10	..3,2,3,2,3..	3	3 =00011	3,2	01101 = 13
11	..2,3,2,3,2..	2,3	12 =01100	2,3,2	01110 = 14
12	..2,3,2,1,2..	2,3,2	14 =01110	2,3,2,1	01111 = 15
13	..1,2,3,3,1..	1	1 =00001	1,2	10000 = 16
14	..2,3,3,1,2..	2,3	12 =01100	2,3,3	10001 = 17
15	..3,1,2,2,1..	3	3 =00011	3,1	10010 = 18
16	..1,2,2,1,2..	1,2	16 =10000	1,2,2	10011 = 19
17	..2,1,2,2,3..	2,1	8 =01000	2,1,2	10100 = 20
18	..2,2,3,2,2..	2,2	7 =00111	2,2,3	10101 = 21
19	..3,2,2,3,1..	3,2	13 =01101	3,2,2	10110 = 22
20	..2,3,1,2,2..	2,3	12 =01100	2,3,1	10111 = 23
21	..1,2,2,2,2..	1,2,2	19 =10011	1,2,2,2	11000 = 24
22	..2,2,3,2,2..	2,2,3	21 =10101	2,2,3,2	11001 = 25
23	..2,2,1,1,2..	2,2	7 =00111	2,2,1	11010 = 26
24	..1,1,2,2,2..	1,1,2	10 =01010	1,1,2,2	11011 = 27
25	..2,2,2,3,2..	2,2,2	11=01011	2,2,2,3	11100 = 28
26	..3,2,3,3,2..	3,2	13 =01101	3,2,3	11101 = 29
27	..3,3,2,2,2..	3,3,2	6 =00110	3,3,2,2	11110 = 30
28	..2,2,2,2,1..	2,2,2	11 =01011	2,2,2,2	11111 = 31
29	..2,1,2,2,2..	2,1,2	20 =10100		
30	..2,2,2,2,1..	2,2,2,2	31 =11111		
31	..1,1,2	1,1,2	10 =01010		

Copyright National Electrical Manufacturers Association
Provided by IHS under license with NEMA
No reproduction or networking permitted without license from IHS

Not for Resale

The decoding proceeds along the following operation:

	Input Code	Prior String	Output String	Extended String	Assigned Table Code
1	00001 = 1		1	1	
2	00011 = 3	1	3	1,3	4 = 00100
3	00101 = 5	3	3,3	3,3	5 = 00101
4	00010 = 2	3,3	2	3,3,2	6 = 00110
5	00010 = 2	2	2	2,2	7 = 00111
6	00001 = 1	2	1	2,1	8 = 01000
7	01001 = 9	1	1,1	1,1	9 = 01001
8	00111 = 7	1,1	2,2	1,1,2	10 = 01010
9	00010 = 2	2,2	2	2,2,2	11 = 01011
10	00011 = 3	2	3	2,3	12 = 01100
11	01100 = 12	3	2,3	3,2	13 = 01101
12	01110 = 14	2,3	2,3,2	2,3,2	14 = 01110
13	00001 = 1	2,3,2	1	2,3,2,1	15 = 01111
	.	.	.	.	.
	.	.	.	.	.
	.	.	.	.	.
	.	.	.	.	.
	.	.	.	.	.
	.	.	.	.	.

The above table is largely self-explanatory except for Lines 3, 7, and 12. Here a code is received for which the translation is not yet available in the code table. Nevertheless, the decompressor can decode it and add the corresponding translation to the code table based on the following logic:

In the compressor, the code that the decompressor received was created by extending the previous prefix by the next pixel value, for example, in Line 11, a prefix 2,3 is extended by another 2 to become 2,3,2 and added to the code table. Then it happened that the next string of pixels that the compressor had to code was identical to the code that had just been added to the code table (Line 12). On the other end, the decompressor knows that the first pixel of the last output string—namely the 2 of 2,3 —must also be the extension of the prefix (i.e., the code that it just received must represent 2,3,2).

When implemented, the following elements will be filled.

Image Presentation Information for above example:

Group	Element	Value			Meaning	Description
0028	0800	454C 5A5F	504D 5649	4C45	"LEMPEL_ZIV"	Label of coding operation
0028	0802	0000			0	Number of code tables
0028	0804	0005			5	Number of bits in each Lempel-Ziv code
(In the following element, the codes are packed and represented by two-byte hexadecimals.)						
7FE0	0000	0020			32	group length
7FE0	0010	08CA D8E0 C9D4 7D40	2105 B070 EA5B	2710 41DA 4CBA		data stream of codes

Copyright National Electrical Manufacturers Association
Provided by IHS under license with NEMA
No reproduction or networking permitted without license from IHS
Not for Resale

5.5 EXAMPLE OF PERIMETER ENCODING

Consider a 16×16 image that is really a circle of 16 pixels diameter. The values outside the circle are to be replaced by 0.

It can be represented by the following elements:

Group	Element	Value		Meaning	Description
0028	0010	0010		16	number of rows
0028	0011	0010		16	number of columns
0028	0060	4544	2046	"DEF"	type of compression
0028	0061	5443	3130	"CT01"	compression librarian
0028	0062	4F52 2044	4E55	"ROUND"	label
0028	0063	4550 454D 2052	4952 4554	"PERIMETER"	compression description
0028	0065	4550 454D 2052	4952 4554	"PERIMETER"	sequence
0028	0066	0026	0070	(0028H,0070H)	pointer
0028	0070	0007 0004 0002 0001 0001 0000 0000 0000 0000 0000 0000 0001 0001 0002 0004 0007	0007 0004 0002 0001 0001 0000 0000 0000 0000 0000 0000 0001 0001 0002 0004 0007	7,7 4,4 2,2 1,1 1,1 0,0 0,0 0,0 0,0 0,0 0,0 1,1 1,1 2,2 4,4 7,7	number of pixels omitted at the left followed by number of pixels omitted at the right.
0028		0071	0000	0	value to be replaced

The pixels would follow, uncompressed, in (7FE0H,0010H).

Copyright National Electrical Manufacturers Association
Provided by IHS under license with NEMA
No reproduction or networking permitted without license from IHS
Not for Resale

Section 6
ABBREVIATED DATA DICTIONARY

6.0 This Section contains a list of data dictionary elements in numeric order. A full explanation of their applicability appears in Section 3.

Table 6-1
DEFINITIONS OF SYMBOLS

DEFINITIONS FOR VALUE REPRESENTATIONS (VR)

BI	16 bit binary, 2's complement except for pixels
BD	32 bit binary
AN	ASCII numeric
AT	ASCII text

DEFINITIONS FOR VALUE TYPES (VT)

EV	Enumerated value for which a list of appropriate entries is given in the data dictionary
DF	Defined format (AN or AT)
FF	Free format (AN or AT)
HX	Any hexadecimal number (BI or BD)

DEFINITIONS FOR VALUE MULTIPLICITY (VM)

S	Single
M	Multiple

DEFINITIONS FOR DATA ELEMENT TYPES

1	Mandatory if compression employed
1D	Mandatory, but receiver shall assume a default if element is not sent
2	Mandatory for a particular type of compression
2D	Mandatory for a particular type of compression, but receiver will assume a default if the element is not sent
3	Optional elements

Copyright National Electrical Manufacturers Association
Provided by IHS under license with NEMA
No reproduction or networking permitted without license from IHS
Not for Resale

Group	Element	Name	VR	VT	VM	Type	Definition
0000	0002	Variable length	BI	HX	S	1D	Variable length pixel data; 0 = no; 1 = yes. Default = 0
0028	005F	Compression Recognition Code	AT	EV	S	1	ACR/NEMA 1.0
0028	0060	Compression Code	AT	EV	S	1	Class of compression scheme: NONE, DEF, CONT, IMP, or PROP
0028	0061	Compression Originator	AT	FF	S	1D	Label of device that is the origin of the compression procedure (ex: NMR 3). Default = (0008H, 1010H)
0028	0062	Compression Label	AT	FF	S	1D	Label of compression procedure (ex: DPCM V1.0). Default = none.
0028	0063	Compression Description	AT	FF	S	3	Description of compression procedure (ex: 2-D LINEAR PREDICTOR, HUFFMAN CODING)
0028	0065	Compression Sequence	AT	EV	M	2	Sequence of compression operations in order performed by transmitter. Choices: PERIMETER RUN DPCM DCT S_TRANS P_TRANS CODE PRIVATE (ex: DPCM\CODE)
0028	0066	Compression Step Pointers	BI	HX	M	2	Pointers to the location of each compression operation (ex: 0028 0080 0028 0800)
0028	0068	Repeat Interval	BI	HX	S	2D	Number of pixels between those given as actual. Default = unused.
0028	0070	Perimeter Table	BI	HX	M	2	Number of pixels skipped and number of pixels kept for each row. The length of the table is twice the number of rows (0028H,0010H).
Elements (0028H,0080H) to (0028H,0082H) are for DPCM.							
0028	0071	Perimeter Value	BI	HX	S	2D	Value to be substituted for omitted pixels Default = 0
0028	0080	Predictor Rows	BI	HX	S	2	Number of rows in predictor
0028	0081	Predictor Columns	BI	HX	S	2	Number of columns in predictor
0028	0082	Predictor Constants	BI	HX	M	2	Predictor constants, in raster order
Elements (0028H,0090H) to (0028H,0094H) refer to blocking.							
0028	0090	Blocked Pixels	AT	EV	S	2D	BLOCK. Default = NONE
0028	0091	Block Rows	BI	HX	S	2D	Number of rows in blocks; Default = not used
0028	0092	Block Columns	BI	HX	S	2D	Number of columns in block; Default = not used
0028	0093	Row Overlap	BI	HX	S	2D	Number of Pixels in row overlap; Default = 0
0028	0094	Column Overlap	BI	HX	S	2D	Number of pixels in Column overlap; Default = 0

Copyright National Electrical Manufacturers Association
Provided by IHS under license with NEMA
No reproduction or networking permitted without license from IHS
Not for Resale

Group	Element	Name	VR	VT	VM	Type	Definition
Elemcnts (0028H,0400H) through (0028H,06FFH) are required for S-transform or P-transform.							
0028	0400	Label	AT	FF	S	2	Label of operation (ex: S-TRANSFORM)
0028	0401	Version Number	AT	FF	S	2	Version number (ex: V2.3)
0028	0402	Number of Transform Steps	BI	HX	S	2	Number of transformation steps (ex: 4)
0028	0403	Sequence of Compressed Data	AT	EV	M	2	Sequence in which coded data are transmitted: xxyyyy where xx is a two-letter code abbreviation and yyyy is a 4-letter coefficient abbreviation. ex: (HFSS4\HFSDV4\ HFSDH4\HFSDD4\HFSDV3\HFSDH3\ HFSDD3\HFSDV2\HFSDH2\HFSDD2\ HFSDV1\ HFSDH1\HFSDD1) where– HFSSn = Huffman coded last sums HFSDVn = Huffman coded n-th vertical difference coeffs HFSDHn = Huffman coded n-th horizontal difference coeffs HFSDDn = Huffman coded n-th diagonal difference coeffs
0028	0404	Pointers to Details of Coefficients	BI	HX	M	2	Group and element numbers for each transform step in the order of (0028H,0403H)(ex: 0028 0410 0028 0420 ..)
0028	0410	Rows for Nth Order Coefficients	BI	HX	S	2	Number of rows (v4) in subsection of nth sum and difference coefficients
0028	0411	Columns for Nth Order Coefficients	BI	HX	S	2	Number of columns (h4) in subsection of nth sum and difference coefficients
0028	0412	Coefficient Coding	AT	FF	M	2	Code scheme used for coefficients of nth transform step, in order of (0028H,0403H). (ex: HUFFMAN\HUFFMAN\HUFFMAN\ HUFFMAN or \HUFFMAN_\, where _\ indicates that all coefficients are coded by the same scheme.)
0028	0413	Coefficient Coding Pointers	BI	HX	M	2	Group and element numbers pointing to each coeff coding scheme in (0028H,0412H) (ex: 0028 0800 0028 0810 0028 0820 0028 0830)
0028	0420	Rows for (N–1)th Coefficients	BI	HX	S	2	Number of rows (v3) in subsection of (n–1)th difference coefficients
0028	0421	Columns for (n–1)th Order Coefficients	BI	HX	S	2	Number of columns (h3) in subsection of (n–1)th difference coefficients
0028	0422	Coefficient Coding	AT	FF	M	2	Coding scheme used for coefficients of (n–1)th transform step, in order of (0028H,0403H) (ex: HUFFMAN\HUFFMAN\HUFFMAN\ or HUFFMAN_\)
0028	0423	Coefficient Coding Pointers	BI	HX	M	2	Group and element numbers pointing to each coeff coding scheme in (0028H,0422H) (ex: 0028 0840 0028 0850 0028 0860)

Copyright National Electrical Manufacturers Association
Provided by IHS under license with NEMA
No reproduction or networking permitted without license from IHS
Not for Resale

Group	Element	Name	VR	VT	VM	Type	Definition
Elements (0028H,0700H) through (0028H,07FFH) are reserved for DCT.							
0028	0700	DCT Label	AT	FF	S	2	Label of DCT (ex: V1.0)
0028	0701	Data Block Description	AT	EV	M	2	Text description of block. Choices, in order: NORM_FACTOR ZONAL_ENUM ADAPTIVE_MAP CODE_ENUM (ex: NORM_FACTOR\CODE_ENUM)
0028	0702	Data Block	BI	HX	S	2	Group and element numbers for each item in (0028H,0701H) except for DATA (ex: 0028 0710 0028 0740)
0028	0710	Norm Factor Format	BI	HX	M	2	Number of bits and number of bits to right of decimal point in normalization factor (ex: 0010 000C for a 16 bit norm factor with 12 bits to the right of decimal point)
0028	0720	Zonal Map Number Format	BI	HX	S	2	Number of bits in data block used to store zonal map number (ex: 4)
0028	0721	Zonal Map Location	BI	HX	M	2D	Group and element number of first zonal map Default = (1010H 0004H)
0028	0722	Zonal Map Format	BI	HX	S	2	Number of bits per zonal map entry at location given in (0028H,0721H) (ex: 4)
0028	0730	Adaptive Map Format	BI	HX	S	2	Number of bits used for each adaptive map run length entry (ex: 5)
0028	0740	Code Number Format	BI	HX	S	2	Number of bits used to store code table numbers (ex: 6)
0028	0800	Code Label	AT	EV	M	2	Label of coding operation; Choices: HUFFMAN SHIFT ESCAPE RUN_LENGTH LEMPEL_ZIV
0028	0802	Number of Tables	BI	HX	S	2D	Number of code tables. Default = 1
0028	0803	Code Table Location	BI	HX	M	2D	Group and element numbers of first code table; Default = (1000H,0010H)
0028	0804	Number of Bits for Code Word	BI	HX	S	2D	Number of bits per Lempel-Ziv code word; Default = 16
Group 1000 is reserved for coding tables.							
0028	0808	Image Data Location	BI	HX	M	2	Group and Element number of coded coefficients (ex: 7FE0 0010 7FE0 0020)
(0028H,0810H) through (0028H,0818H) are repeats for the next table, and so forth.							
1000	0000	Group Length	BD	HX	S	2	An even number of bytes from the end of the value field to the beginning of the next group
1000	0010	Escape Triplet #1	BI	HX	M	2	First escape triplet: Number of actual value bits, number of escape code bits, escape code

Copyright National Electrical Manufacturers Association
Provided by IHS under license with NEMA
No reproduction or networking permitted without license from IHS
Not for Resale

Group	Element	Name	VR	VT	VM	Type	Definition
1000	0011	Run Length Triplet #1	BI	HX	M	2	First run length triplet: Number of run length value bits; number of run length, code bits; run length code
1000	0012	Huffman Table Size	BI	HX	S	2	Number of data triplets in Huffman table
1000	0013	Huffman Table #1	BI	HX	M	2	Huffman table #1, triplets: Value 1 being represented, number of value 1 code bits, code for value 1, etc.
1000	0014	Shift Table	BI	HX	S	2	Number of data triplets in shift table
1000	0015	Shift Table #1	BI	HX	M	2	Shift table #1, triplets: Shift represented, number of shift code bits, code for shift
1000	0020	Escape Triplet #2	BI	HX	M	2	Second escape triplet
1000	0021	Run Length Triplet #2	BI	HX	M	2	Second run length triplet
1000	0022	Huffman Table Size #2	BI	HX	S	2	Number of data triplets in Huffman table #2
1000	0023	Huffman Table #2	BI	HX	M	2	Huffman table #2
1000	0024	Shift Table Size	BI	HX	S	2	Number of data triplets in shift table #2
1000	0025	Shift Table #2	BI	HX	M	2	Shift table #2
							and so on for remaining code tables.
		Group 1010 is reserved for DCT Zonal Maps.					
1010	0004	Zonal Map Number 1	BI	HX	M	2	First zonal map: Number of entries according to (0028H, 0091–92H) followed by the number of bits per entry according to (0028H,0722H)
1010	0006	Zonal Map Number 2	BI	HX	M	2	Second zonal map
							and so on for remaining zonal maps.
		Group 60xx is reserved for overlays as found in the ACR/NEMA Standards Publication No. 300.					
60xx	0060	Compression Code	AT	EV	S	1	Class of compression scheme: NONE, DEF, CONT, IMP, or PROP
60xx	0061	Compression Originator	AT	FF	S	1D	Label of device that is the origin of the compression procedure (ex: NMR 3) Default = (0008H, 1010H)
60xx	0062	Compression Label	AT	FF	S	3	Label of compression procedure (ex: DPCM V1.0)
60xx	0063	Compression Description	AT	FF	S	3	Description of compression procedure (ex: 2-D LINEAR PREDICTOR, HUFFMAN CODING)
60xx	0066	Compression Step Pointers	BI	HX	M	2D	Pointers to the location of each compression operation; Default = (60xxH,0800H)
60xx	0068	Repeat Interval	BI	HX	S	2D	Number of bits between those given as actual
60xx	0069	Bits grouped	BI	HX	S	2D	Number of bits grouped together as one value to be compressed. Default = 1

Copyright National Electrical Manufacturers Association
Provided by IHS under license with NEMA
No reproduction or networking permitted without license from IHS
Not for Resale

Group	Element	Name	VR	VT	VM	Type	Definition
60xx	0800	Code Label	AT	EV	M	2	Label of coding operation; Choices: HUFFMAN SHIFT ESCAPE RUN_LENGTH LEMPEL_ZIV
60xx	0802	Number of Tables	BI	HX	S	2D	Number of code tables; Default = 1
60xx	0803	Code Table Location	BI	HX	M	2D	Group and element numbers of first code table; Default = (1000H,0010H)
60xx	0804	Number of Bits for Code Word	BI	HX	S	2D	Number of bits per Lempel-Ziv code word; Default = 1
0028	0069	Bits Grouped	BI	HX	S	2D	Number of bits grouped together as one pixel for compression; Default = (0028H,0101H)

Group 7FE0 is the image data group. If a variable length message is being used, Groups (7F00H through 7FF8H) are the image data groups. As usual, the data is stored in the defined order. For S_TRANS or P_TRANS the following elements are defined.

7FE0	0000	Group Length	BD	HX	S	1	An even number of bytes from the end of the value field to the beginning of the next group
7FE0	0010	Coefficients SSn	BI	HX	M	1	Coded image data for SSn
7FE0	0011	Variable Length	BI	HX	S	1	Group number containing next piece of pixel stream. If 0, then group had last piece.
7FE0	0020	Coefficients SDVn	BI	HX	M	1	Coded image data for SDVn
7FE0	0030	Coefficients SDHn	BI	HX	M	1	Coded image data for SDHn
7FE0	0040	Coefficients SDDn	BI	HX	M	1	Coded image data for SDDn

and so on for other difference coefficients.

Copyright National Electrical Manufacturers Association
Provided by IHS under license with NEMA
No reproduction or networking permitted without license from IHS

Not for Resale

APPENDIX
References

1. Gonzales, R. C. and Wintz, P., *Digital image processing.* Addison-Wesley, Reading, Mass., 1977, pp. 276–281.

2. Jain, A. K., *Image data compression: A review.* Proceedings IEEE Vol. 69, March 1961, pp. 349–389.

3. Rosenfeld, A. and Kak, A. C., *Digital picture processing.* Academic Press, New York, 1982, Vol. 1, pp. 165–176.

4. Andrews, H. C. and Pratt, W. K., *Transform Image Coding.* Proc. Computer Processing in Communications. New York, Polytechnic Press, 1969, pp. 63–84.

5. Jain, A. K., *A sinusoidal family of unitary transforms.* IEEE Transactions on Pattern Analysis and Machine Intelligence, Vol. PAMI-1, Oct. 1979, pp. 356–365.

6. Hamidi, M. and Pearl, J., *Comparison of the Cosine and Fourier Transforms of Markov-1 signals.* IEEE Transactions on Acoustics, Speech, Signal Processing, Vol. ASSP-24, Oct. 1976, pp. 428–429.

7. Chen, W., Smith, C.H. and Fralick, S., *A Fast Computational Algorithm For the Discrete Cosine Transform.* IEEE Transactions on Communications, Vol. COM-25, Sept. 1977.

8. Chen, W. H. and Smith, C. H., *Adaptive coding of monochrome and color images.* IEEE Transactions on Communications, Vol. COM-25, Nov. 1977, pp. 1285–1292.

9. Lux, P., *A novel set of closed orthogonal functions for picture coding.* Archiv fuer Elektronik and Uebertragungestechnik 31, 267 (1977).

10. Lux, P., *Redundancy reduction in radiographic pictures.* Optica acta 24, 349 (1977).

11. Lux, P., *Method and arrangement for the redundancy-reducing coding of pictures.* US Patent 4,155,097 (5-15-1979).

12. Lux, P., *Method and arrangement for the redundancy-reducing picture coding.* U.S. Patent 4,190,861 (2-26-1980).

13. Wendler, Th., Meyer-Ebrecht, D., *Proposed standard for variable format picture processing and a coded approach to match diverse imaging devices.* SPIE 318, 298 (1982).

14. Reinfelder, H. E., *Reversible Datenkompression von Grauwertbildern.* Diplomarbeit Universitaet Erlangen/Nuernberg, Inst. Angewandte Optik, July 1975.

    Reinfelder, H. E., *Datenkompression von Grauwertbildern.* DGAO Bad Ischl, 1975.

    Reinfelder, H. E., *New orthogonal transformation for data compression.* University Erlangen/Nuernberg, Inst. Angewandte Optik, 1976.

    Reinfelder, H. E., *Digital radiography with reusable memory screen: Problems and solutions.* European Congress of Radiology, Lisbon, 1987.

15. Huffman, D. A., *A method for the construction of minimum-redundancy codes.* Proc. IRE Vol. 40, 1952, pp. 1098–1101.

Copyright National Electrical Manufacturers Association
Provided by IHS under license with NEMA
No reproduction or networking permitted without license from IHS
Not for Resale

16. Gonzales, R. C. and Wintz, P., *Digital image processing.* Addison-Wesley, Reading, Mass., 1977, pp. 239–241.

17. Rosenfeld, A. and Kak, A. C.: *Digital picture processing.* Academic Press, New York, 1982. Vol. 1, pp. 182–191.

18. Golomb, S. W., *Run length encodings.* IEEE Transaction Information Theory, IT-12, 1966, pp. 399–401.

19. Gonzales, R. C. and Wintz P., *Digital image processing.* Addison-Wesley, Reading, Mass., 1977, pp. 265–276.

20. Rhodes, R. C., Quinn, J. F. and Silvester, J., *Locally optimal run-length compression applied to CT images.* IEEE Trans. Med. Imag. Vol. MI-4, 1985, pp. 84–90.

21. Welch, T. A., *A technique for high-performance data compression.* Computer, June 1984, pp. 8–19.

22. Ziv, J. and Lempel, A., *A universal algorithm for sequential data compression.* IEEE Transaction Information Theory, IT-23, 1977, pp. 337–343.

23. Ziv, J. and Lempel, A., *Compression of individual sequences via variable-rate coding.* IEEE Transaction Information Theory, IT-24, 1978, pp. 530–536.

Copyright National Electrical Manufacturers Association
Provided by IHS under license with NEMA
No reproduction or networking permitted without license from IHS

Not for Resale

NEMA STANDARDIZATION

The purpose of NEMA Standards, their classification and status, are set forth in certain clauses of the NEMA *Standardization Policies and Procedures* manual and are referenced below.

Purpose of Standards

National Electrical Manufacturers Association standards are adopted in the public interest and are designed to eliminate misunderstandings between the manufacturer and the purchaser and to assist purchasers in selecting and obtaining the proper product for their particular needs. Existence of a National Electrical Manufacturers Association standard does not in any respect preclude any member or nonmember from manufacturing or selling products not conforming to the standard. *(Standardization Policies and Procedures, p. 1)*

Definition of a Standard

A standard of the National Electrical Manufacturers Association defines a product, process, or procedure with reference to one or more of the following: nomenclature, composition, construction, dimensions, tolerances, safety, operating characteristics, performance, rating, testing, and the service for which they are designed.

(Standardization Policies and Procedures, p. 2)

Dimensions

Where dimensions are given for interchangeability purposes, alternate dimensions satisfying the other provisions of the Standards Publication may be capable of otherwise equivalent performance.

(Standardization Policies and Procedures, p.8)

Categories of Standards

National Electrical Manufacturers Association Standards are of two classes:

1. NEMA Standard, which relates to a product, process, or procedure commercially standardized and subject to repetitive manufacture, which standard has been approved by at least 90 percent of the members of the Subdivision eligible to vote thereon;
2. Suggested Standard for Future Design, which may not have been regularly applied to a commercial product, but which suggests a sound engineering approach to future development, which standard has been approved by at least two-thirds of the members of the Subdivision eligible to vote thereon.

(Standardization Policies and Procedures, pp. 7 & 16)

Authorized Engineering Information

Authorized Engineering Information consists of explanatory data and other engineering information of an informative character not falling within the classification of NEMA Standard or Suggested Standard for Future Design, which standard has been approved by at least two-thirds of the members of the Subdivision eligible to vote on the standard.

(Standardization Policies and Procedures, pp. 7 & 16)

Official Standards Proposal

An Official Standards Proposal is an official draft of a proposed standard which is formally recommended to an outside organization(s) for consideration, comment, and/or approval, and which has been approved by at least 90 percent of the members of the Subdivision eligible to vote thereon.

(Standardization Policies and Procedures, pp. 7 & 16)

Identification of Status

Standards in NEMA Standards Publications are identified in the foreword or following each standard as "NEMA Standard" or "Suggested Standard for Future Design." These indicate the status of the standard. These words are followed by a date which indicates when the standard was adopted in its present form by the Association.

The material identified as "Authorized Engineering Information" and "Official Standards Proposal" is designated similarly.

Copyright National Electrical Manufacturers Association
Provided by IHS under license with NEMA
No reproduction or networking permitted without license from IHS
Not for Resale