NEMA PS*1 91 ■ 6470247 0501970 37T ■

STANDARDS PUBLICATION NO. ACR/NEMA PS 1

nema

STANDARD FOR MAGNETIC TAPE

NEMA

NATIONAL ELECTRICAL MANUFACTURERS ASSOCIATION ■ 2101 L STREET, N.W., WASHINGTON, D.C. 20037

Copyright National Electrical Manufacturers Association
Provided by IHS under license with NEMA
No reproduction or networking permitted without license from IHS

Not for Resale

ACR/NEMA PS 1-1991

PS 1

STANDARD FOR MAGNETIC TAPE

Approved by:

The American College of Radiology

Published by:

National Electrical Manufacturers Association
2101 L Street, N.W., Suite 300
Washington, DC 20037

© 1992 by National Electrical Manufacturers Association

Copyright National Electrical Manufacturers Association
Provided by IHS under license with NEMA
No reproduction or networking permitted without license from IHS
Not for Resale

TABLE OF CONTENTS

Foreword i

Scope ii

Section 1 REFERENCEDSTANDARDS AND DEFINITIONS 1
Referenced Standards 1
Definitions 1

Section 2 PHYSICAL AND LOGICAL DESCRIPTION OF TAPE 3
Physical Characteristics 3
Media Definition 3
Recording Density and Encoding Method 3
Block Size 3
Tape Length 3
Logical Requirements 3
Introduction 3
Levels 3
Tape Layout 4
Tape Markers and Labels 4
BOT 4
VOL1 4
UVL1 6
UVL2 6
UVL3-9 10
UVL2 Gap 10
HDR1 and EOF1 10
Tape Mark 10
EOT 10
Files 10
Introduction 10
Directory 10
Filler Files 11
Directory Gap 12
Mandatory Directory 12
HDR1 file identifier for the mandatory directory 13
Directory Map 13
Data Set IDs (1-N) 13
EOF1 of Directory File 13
Optional Directories 13
Data Set 13

Tables
Table 2-1 Read-Write Compatibility of Levels 4
Table 2-2 Elements in the User Volume Label 1 (UVL1) 11
Table 2-3 Elements in the User Volume Label 2 (UVL1) 11
Table 2-4 Directory Map Example 14

Figures
Figure 2-1 Data Set File Structure 5
Figure 2-2 ACR-NEMA Tape Standard, Level 1 6
Figure 2-3 ACR-NEMA Tape Standard, Level 2 7
Figure 2-4 ACR-NEMA Tape Standard, Level 3 8
Figure 2-5 CR-NEMA tape standard, Level 4 9
Figure 2-6 Corrupt Block Following Expansion of the Directory (ACR-NEMA Level 3) 12

Copyright National Electrical Manufacturers Association
Provided by IHS under license with NEMA
No reproduction or networking permitted without license from IHS
Not for Resale

Foreword

As the American College of Radiology (ACR)-National Electrical Manufacturers Association (NEMA) Digital Imaging and Communications Standard (ACR-NEMA 300) was developed, it was extended from a simple hardware interface to include features that would require software or firmware implementation. In addition, a comprehensive message format was established for images and associated data. The objective of both the ACR and NEMA was to produce a standard that is flexible (in the sense of the ability to accommodate a large variety of devices) and general (in the sense of the ability to handle a range of data in addition to images). It was also believed that the standard should facilitate picture archiving and communications systems (PACS) development by allowing equipment from multiple vendors to exchange data. For inter-institutional data exchange, it was believed that some form of popular exchange medium would be valuable for the transfer of ACR-NEMA messages.

Half-inch, 9-track magnetic tape seemed to be a good choice for a machine-readable form of the ACR-NEMA message as many medical imaging devices use tape as an archival medium. The Working Group formed to study exchange media agreed with this assessment, and chose to standardize magnetic tape first.

In preparation of this Standards Publication, input of users and other interested parties has been sought and evaluated. Inquiries, comments, and recommended revisions of this standard should be submitted to the Diagnostic Imaging and Therapy Systems Division by contacting:

Vice President, Engineering
National Electrical Manufacturers Association
2101 L Street, N.W., Suite 300
Washington, DC 20037

Copyright National Electrical Manufacturers Association
Provided by IHS under license with NEMA
No reproduction or networking permitted without license from IHS
Not for Resale

Scope

The objective of Working Group V of the ACR-NEMA Digital Imaging and Communications Standards Committee is to develop standards for various exchange media. These media will be used to exchange ACR-NEMA standard data sets as defined in the ACR-NEMA Standards Publication No. 300. An ACR-NEMA data set is an ACR-NEMA message without the command groups. The hardware interface defined as part of ACR-NEMA Standards Publication No. 300 is not required for media exchange.

As noted in the Foreword, the Working Group chose to work first on magnetic tape as an exchange medium. The objective of this Standards Publication is to fully define the physical and logical requirements for magnetic tape media to ensure that magnetic tape meeting these requirements can be used in an interchange environment. With the appropriate software, a magnetic tape containing an ACR-NEMA data set written on one piece of imaging equipment should be read properly by a different piece of imaging equipment.

It is anticipated that this standard will be used by any medical diagnostic imaging or therapy system which has, as part of its hardware, a magnetic tape drive and the necessary electronics and software to support writing to, and reading from, the tape drive. Some devices may only write a standard tape (an IMAGE SOURCE device), others may only read a standard tape (an IMAGE SINK device), and some may both write and read standard tapes (IMAGE SOURCE/SINK devices, for example).

This Standards Publication is compatible with the ACR-NEMA Digital Imaging and Communications Standard (ACR-NEMA 300) standard. The sections of ACR-NEMA 300 concerning the physical hardware and necessary protocol to operate the hardware interface do not apply to this Standard.

Conformance to this standard does not imply or require conformance to the ACR-NEMA Standards Publication 300. Conversely, conformance of the ACR-NEMA Standards Publication 300 does not imply or require conformance to this standard.

The purpose of this Standards Publication is to facilitate exchange of data sets via magnetic tape. It is not intended to serve as a means of validating the command protocol contained in ACR-NEMA 300.

Copyright National Electrical Manufacturers Association
Provided by IHS under license with NEMA
No reproduction or networking permitted without license from IHS
Not for Resale

SECTION 1
REFERENCED STANDARDS AND DEFINITIONS

1.1 REFERENCED STANDARDS

In this publication, reference is made to the standards listed below. Copies are available from the indicated sources.

American National Standards Institute
1430 Broadway
New York, NY 10018

X3.40-1983	*Unrecorded Magnetic Tape for Information Interchange (9-Track 200 and 800 CPI, NRZI, and 1600 CPI, PE)*
X3.22-1983	*Recorded Magnetic Tape for Information Interchange (800 CPI, NRZI)*
X3.27-1987	*Magnetic Tape Labels and File Structure for Information Interchange*
X3.39-1986	*Recorded Magnetic Tape for Information Interchange (1600 CPI, Phase Encoded)*
X3.54-1986	*Recorded Magnetic Tape for Information Interchange (6250 CPI, Group Coded Recording)*

International Standards Organization
1 Rue de Varembe
Geneva, Switzerland

*ISO 5652	*Information Processing - 9 Track, 12,7 mm (0.5 in.) Wide Magnetic Tape for Information Interchange - Format and Recording, Using Group Coding at 246 cpmm (6250 cpi)*

National Electrical Manufacturers Association
2101 L Street, N.W., Suite 300
Washington, DC 20037

ACR-NEMA 300-1988	*Digital Imaging and Communications*

1.2 DEFINITIONS

ACR-NEMA HEADER Groups 0008H, 0010H, 0018H, 0020H, and 0028H, and their associated shadow groups, as defined in ACR-NEMA 300.

ASCII Characters Refers to only those characters allowed in label groups as defined in ANSI X3.27.

BOT Beginning of tape.

BPI Bits per inch.

CPI Characters per inch.

DATA SET An ACR-NEMA message less the command (0000H) group and the command shadow group (0001H).

EOF End of file.

EOT End of tape.

EOV End of volume.

GCR Group Coded Recording.

H When used after digits means hexadecimal.

HDR Header.

MANDIR Mandatory Directory.

NRZI Non-return to zero, inverted.

OPDIR Optional Directory.

PE Phase encoded.

UVL User volume label.

VOL Volume label.

*Available through the American National Standards Insitute

Copyright National Electrical Manufacturers Association
Provided by IHS under license with NEMA
No reproduction or networking permitted without license from IHS
Not for Resale

Copyright National Electrical Manufacturers Association
Provided by IHS under license with NEMA
No reproduction or networking permitted without license from IHS

Not for Resale

SECTION 2
PHYSICAL AND LOGICAL DESCRIPTION OF TAPE

2.1 PHYSICAL CHARACTERISTICS

2.1.1 Media Definition

This Standard supports the exchange of reels of one-half inch nine track magnetic tape containing the data defined by the ACR-NEMA Digital Imaging and Communications Standard (ACR-NEMA 300-1985) and complying with the logical requirements described in 2.2 of this Standards Publication.

NEMA Standard 8-28-1991.

2.1.2 Recording Density and Encoding Method

This Standard is concerned solely with the following densities and encoding techniques:

Density	Encoding	ANSI Standard
800 CPI	NRZI	X3.22
1600 CPI	PE	X3.39
6250 CPI	GCR	X3.54

Compliance with the cited ANSI standards is mandatory for successful exchange of information.

NEMA Standard 8-28-1991.

2.1.3 Block Size

The length of blocks within all files shall be 2048 bytes. However, although in conflict with ANSI X3.27, a block length of 4096 or 8192 bytes shall be permitted if agreed upon between the sending party and the receiving party.

NEMA Standard 8-28-1991.

The decision to permit block sizes larger than 2048 bytes was made in anticipation of changes to ANSI X3.27 and to increase effective storage capacity and throughput. The option to support 8192 byte blocks is supported by ISO 5652 and is referenced in planned revisions to the ANSI standards.

Authorized Engineering Information 8-28-1991.

2.1.4 Tape Length

There shall be no restrictions with regard to length of tape.

NEMA Standard 8-28-1991.

2.2 LOGICAL REQUIREMENTS

2.2.1 Introduction

The logical structure of the tape must be compatible with a subset of the ANSI standard "Magnetic Tape Labels and File Structure for Information Interchange (ANSI X3.27)." This Standard requires ANSI level 2 labels, file structure, and record format as defined in ANSI X3.27. The specific items used which are defined in ANSI X3.27 are explained in 2.2.4.1 through 2.2.4.9 of this Standards Publication.

The tape labels UVL1, HDR1, HDR2, EOF1 and EOF2 must contain only ASCII characters and must be written in the order specified, e.g., for the tape label identifier UVL1, U must precede V which must precede L which must precede 1.

This standard does not support deleting of data sets from the tape.

Non-ASCII data consisting of more than one byte of information must be written on to the tape with the least significant byte first.

NEMA Standard 8-28-1991.

For example, for 32-bit integers, the order is least significant byte to most significant byte.

Authorized Engineering Information 8-28-1991.

2.2.2 Levels

It is common practice to use magnetic tape as an archival as well as exchange medium for medical imaging. In this use, images may be added to a tape which is only partially full. This requires updating of the directory (if present), and within the context of this standard, may require rewriting tape labels as well.

Two methods are developed for this standard to accomplish such tape "updating." Because these methods require different application software and/or systems software support, different "levels" are established.

There are four levels defined by this standard. Levels 1 and 2 do not allow updating of tapes. Levels 3 and 4 use the methods of filler files and tape gaps, respectively, to provide space on the tape for updating files. In both levels 3 and 4, space is provided after the updatable sections of the tape so that additional data may be added and to allow for longitudinal error in writing the tape.

A further description of the tape filler files is found in 2.3.2.1 and of gaps in 2.3.2.2.

Authorized Engineering Information 8-28-1991.

The tape levels are defined as follows:

a. ACR-NEMA Level 1: non-updatable UVL1 and no directory (see Figure 2-2);
b. ACR-NEMA Level 2: non-updatable UVL1 and non-updatable directories (see Figure 2-3);
c. ACR-NEMA Level 3: non-updatable UVL1 and updatable directories using filler files (see Figure 2-4); and,
d. ACR-NEMA Level 4: non-updatable UVL1, updatable UVL2 and updatable directories using gaps (see Figure 2-5)

Copyright National Electrical Manufacturers Association
Provided by IHS under license with NEMA
No reproduction or networking permitted without license from IHS
Not for Resale

The ACR-NEMA tape levels 1 and 2 must be fully compatible with ANSI X3.27. ACR-NEMA Level 1 is mandatory. Products which support this standard must read and write ACR-NEMA Level 1 tapes. The ACR-NEMA level of the tape must be entered in UVL1 in the field called "Tape Standard Level".

Levels 3 and 4 deviate from the ANSI Standard as described in 2.3.2. ACR-NEMA Levels 2 through 4 are optional. Software supporting ACR-NEMA Levels 2 through 4 must be downwards read compatible for the particular level supported and ACR-NEMA Levels 1 and 2. Table 2-1 indicates the read and write compatibility of different levels.

NEMA Standard 8-28-1991.

Note that this standard does not require that users of ACR-NEMA Levels 3 and 4 be able to write tapes of a lower level (except Level 1). However, such downward write compatibility is not prohibited.

This standard does not specify or require that lower level tape reading software read tapes of a higher level. However, this practice is also not prohibited. For example, whether or not software designed to write and read ACR-NEMA Level 1 tapes can successfully read tapes of levels 2 through 4 depends on the nature of the application and/or system software being used.

It was believed that the requirement to read ACR-NEMA Level 2 tapes by all levels except Level 1 would not be a burden to programmers since Level 2 tapes are the same as Level 3 tapes without the filler files or Level 4 tapes without UVL2 and gaps.

Because ACR-NEMA level 1 is the only mandatory level, it is clear that a level 1 tape is the only exchange medium guaranteed to be readable by the devices meeting the standard.

Authorized Engineering Information 8-28-1991.

Table 2–1
Read and Write Compatibility Levels

		Software Level			
		1	2	3	4
Tape Level	1	R,W	R,W	R,W	R,W
	2	O	R,W	R	R
	3	O	O	R,W	O
	4	O	O	O	R,W

Note: R = Read
W = Write
O = Reading and Writing are Optional

2.2.3 Tape Layout

Figures 2-2 through 2-5 provide an overview of the logical layout of the tape. Each directory and data set is made into a file by enclosing it with HDR1 HDR2, EOF1 and EOF2 labels. (see Figure 2-1). Directory and data set files containing the desired exchange data are presented in an ANSI "wrapper" consisting of physical beginning and end of tape indicators (BOT, EOT), a volume header label (VOL1), user volume labels (UVL1-9) and appropriate tape gaps and tape marks. A double tape mark is used to signify the end of data. When data is appended to the tape the second of the two tape marks is overwritten by the new data. A new pair of tape marks is then placed at the end of the appended data.

This standard uses a subset of ANSI X3.27 Level 2 with fixed record length and multifile single volume format. Data files must be represented as fixed length blocked records. The record length shall be 2048 bytes. In case the data are smaller than the fixed record length, the remainder of the record shall be padded with ASCII zeros (30H).

NEMA Standard 8-28-1991.

If a single block is read, a complete ACR-NEMA group as described in ACR-NEMA 300 may not be obtained. There is no logical relationship between records and the ACR-NEMA data structure. For example, a given ACR-NEMA group is not necessarily wholly contained in a single block.

If 2048 byte physical blocks are used, a one-to-one relationship exists between the physical blocks and the logical records. If a larger physical block size is agreed upon by the parties exchanging tapes, more logical records would be contained within the physical block. For instance, a physical block size of 8192 bytes would contain four logical records.

Authorized Engineering Information 8-28-1991.

2.2.4 Tape Markers and Labels

2.2.4.1 BOT

BOT as defined by ANSI (X3.40, Section 2.2) is a photo-reflective beginning of a tape marker used to indicate the beginning of the permissible recording area.

NEMA Standard 8-28-1991.

2.2.4.2 VOL1

VOL1 as defined by ANSI (X3.27, Section 8.3) is a volume header label composed of the following items: a volume identifier; accessibility; implementation identifier; owner identifier; and label-standard version. The volume identifier is unique within an installation and is assigned by an owner or installation when the volume is initialized. Accessibility is assigned by an owner or instal-

Copyright National Electrical Manufacturers Association
Provided by IHS under license with NEMA
No reproduction or networking permitted without license from IHS
Not for Resale

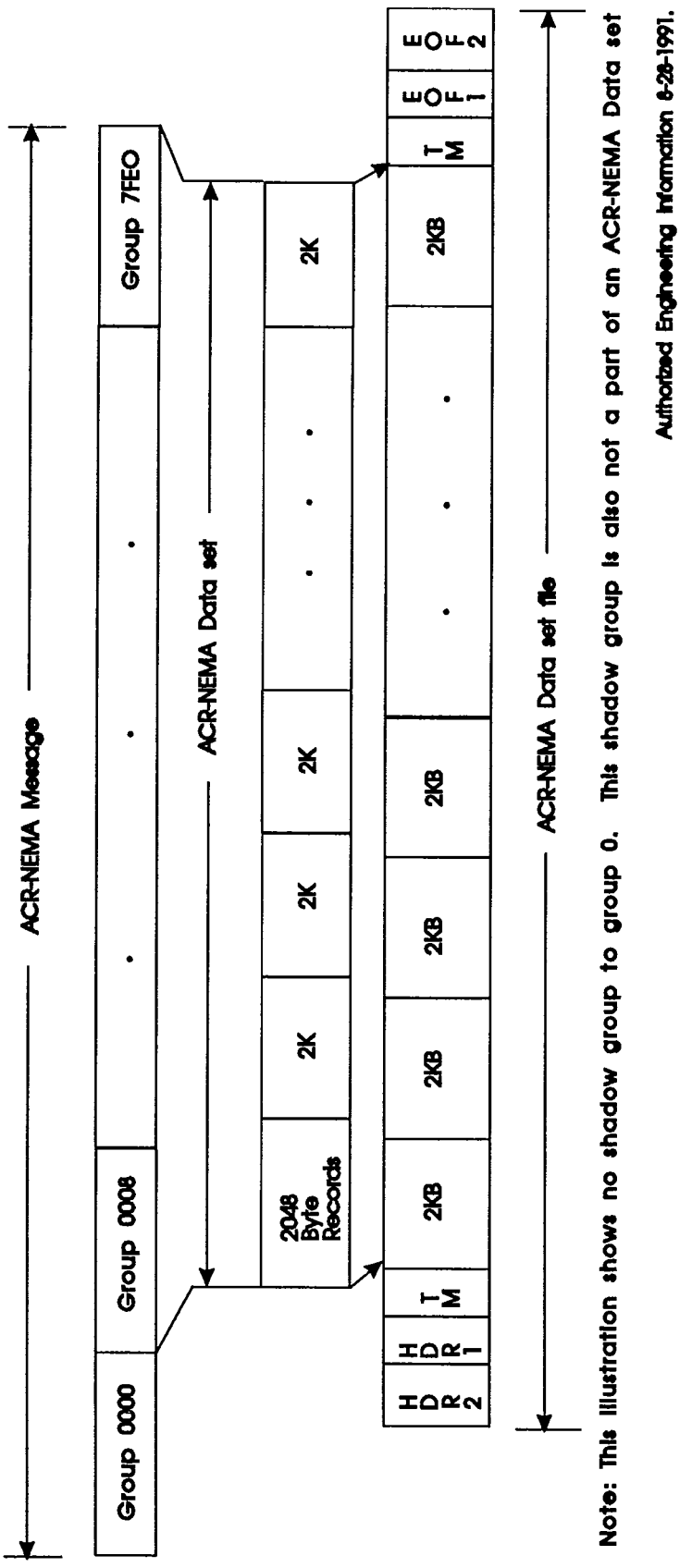

Note: This illustration shows no shadow group to group 0. This shadow group is also not a part of an ACR-NEMA Data set file.

Authorized Engineering Information 6-28-1991.

Figure 2–1
DATA SET FILE STRUCTURE

Copyright National Electrical Manufacturers Association
Provided by IHS under license with NEMA
No reproduction or networking permitted without license from IHS
Not for Resale

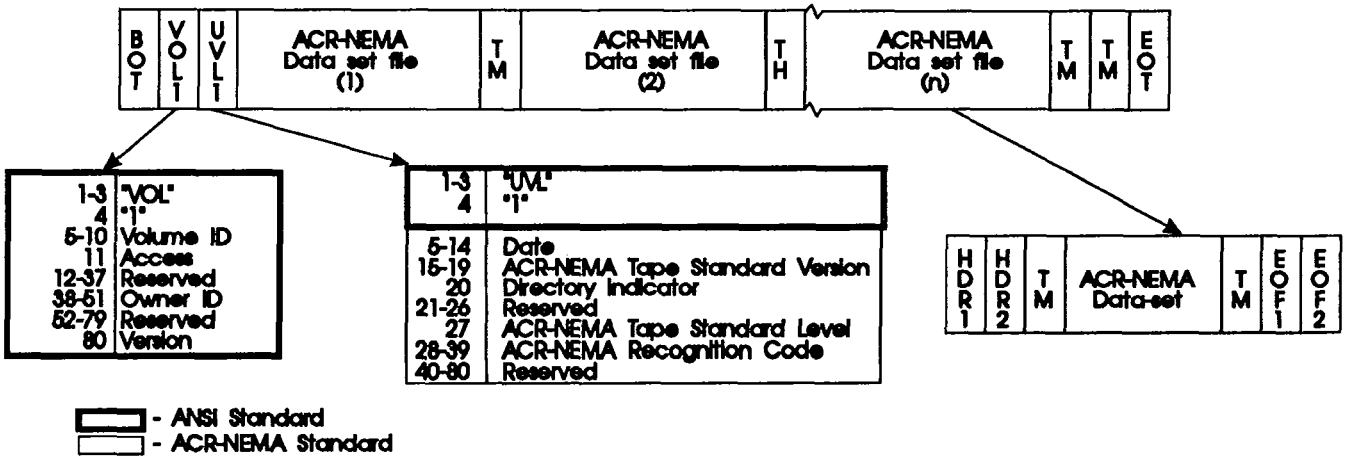

Figure 2–2
ACR-NEMA TAPE STANDARD LEVEL 1

lation at the time of initialization to protect the volume from unauthorized access, provided the tape handling software uses this feature. The implementation identifier specifies the implementation which recorded the volume label. The owner identifier must be assigned by an owner or installation when the volume is initialized. Label-standard version is assigned by the ANSI standard and is inserted when the volume is initialized.

NEMA Standard 8-28-1991.

There is no EOV label since this standard does not address files spanning multiple volumes. This standard does not address multi-volume files which require EOV labels.

Authorized Engineering Information 8-28-1991.

2.2.4.3 UVL1

UVL1 is a user volume label containing information about the installation use of that volume. UVL1 has an ANSI-standard length of 80 characters (ANSI X3.27, Section 8.4.). Conforming to the same standard, the first four character positions must contain "UVL1." Character positions 5 through 31 contain additional elements that must appear and must conform to this standard. These elements are: date, ACR-NEMA tape standard version, directory indicator, block length, tape standard level, and ACR-NEMA recognition code.

Table 2-2 represents the elements in the order in which they must appear, the character positions, and the specified lengths of their fields.

A brief description of the elements is given below.

- Date. The date on which the tape was originally labeled in the ACR-NEMA format (yyyy.mm.dd).
- ACR-NEMA Tape Standard Version. Version of the tape standard. "V 1.0"
- Directory Indicator. Indicates the absence or presence of directories.
  30H No Directory
  31H Only MANDATORY Directory (MANDIR)
  32H MANDIR + 1 OPTIONAL Directory (OPDIR)
  3nH MANDIR + (n-1) OPDIRs where n ≤ 9
- Tape Standard Level. Indicates the ACR-NEMA tape standard levels. Level 1 is an ASCII encoded "1" (31H); level 2 is "2" (32H); level 3 is a "3" (33H); and level 4 is a "4" (34H).
- ACR-NEMA recognition code as specified in the ACR-NEMA Standard 300.
- Reserved. Reserved for future mandatory fields. Contains ASCII spaces (20H).

All fields in UVL1 shall contain only ASCII characters.

NEMA Standard 8-28-1991.

2.2.4.4 UVL2

ULV2 is a user volume label with an ANSI standard length of 80 characters. The first four character positions must contain "UVL2". The use of this user volume label and the fields it contains is supported only in ACR-NEMA tape standard level 4. If any one optional field is used, all fields must either be filled with spaces (20H) or appropriate data. If no fields are used, UVL2 may be omitted.

Copyright National Electrical Manufacturers Association
Provided by IHS under license with NEMA
No reproduction or networking permitted without license from IHS
Not for Resale

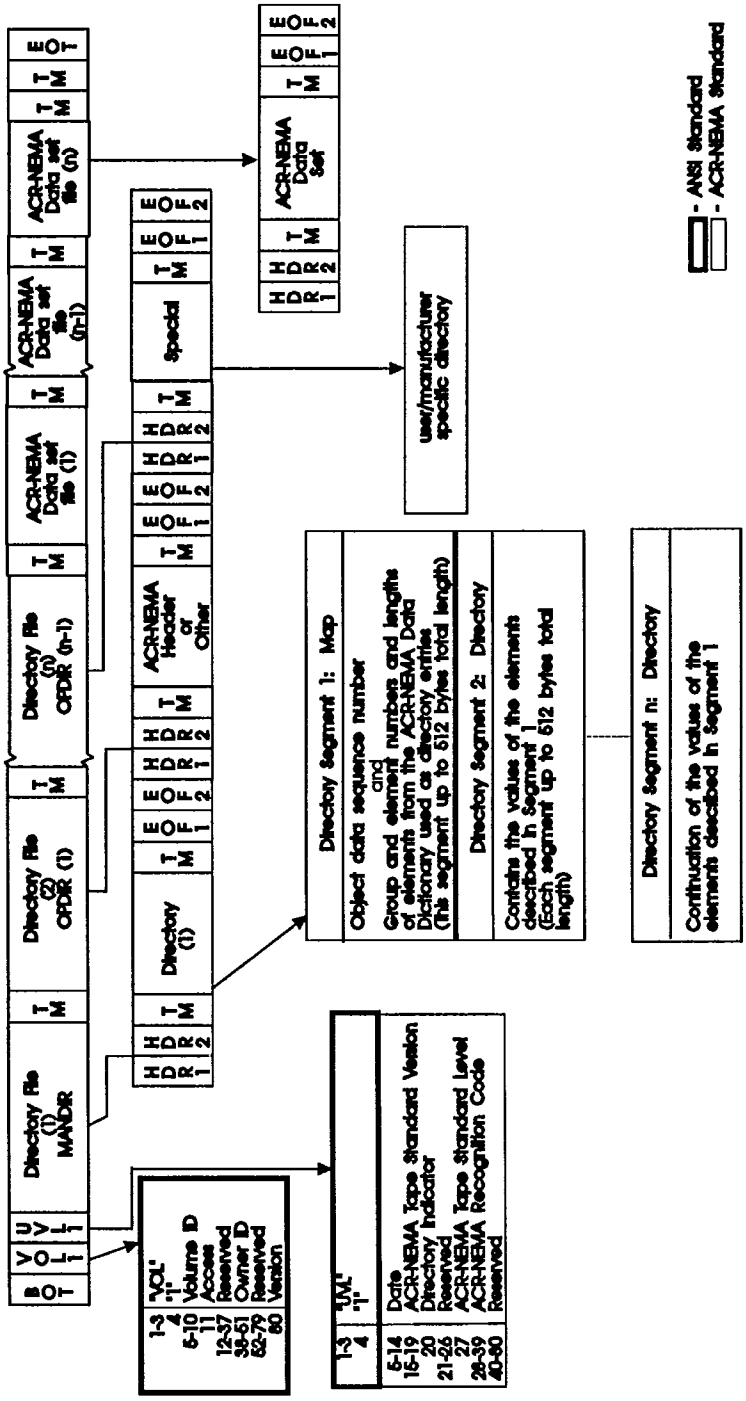

Figure 2–3
ACR-NEMA TAPE STANDARD LEVEL 2

Copyright National Electrical Manufacturers Association
Provided by IHS under license with NEMA
No reproduction or networking permitted without license from IHS
Not for Resale

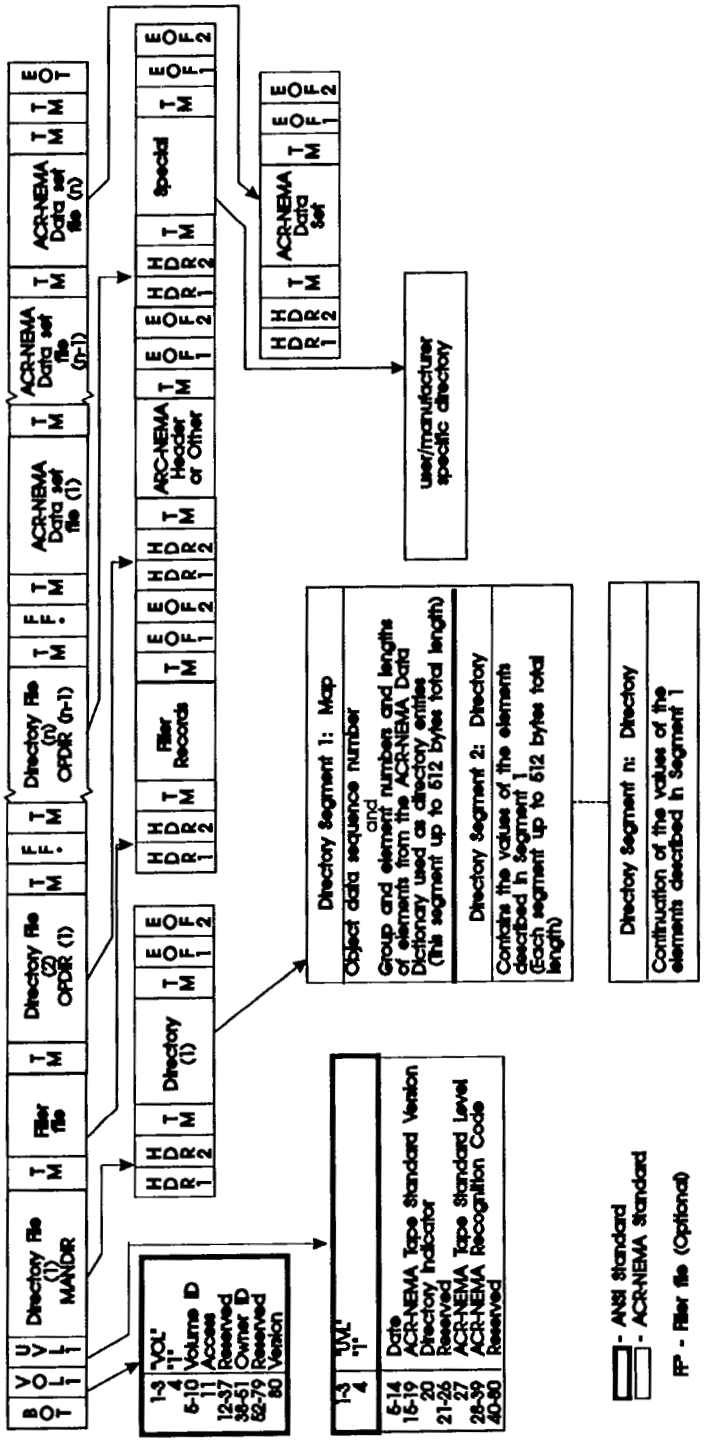

Figure 2–4
ACR-NEMA TAPE STANDARD LEVEL 3

Copyright National Electrical Manufacturers Association
Provided by IHS under license with NEMA
No reproduction or networking permitted without license from IHS
Not for Resale

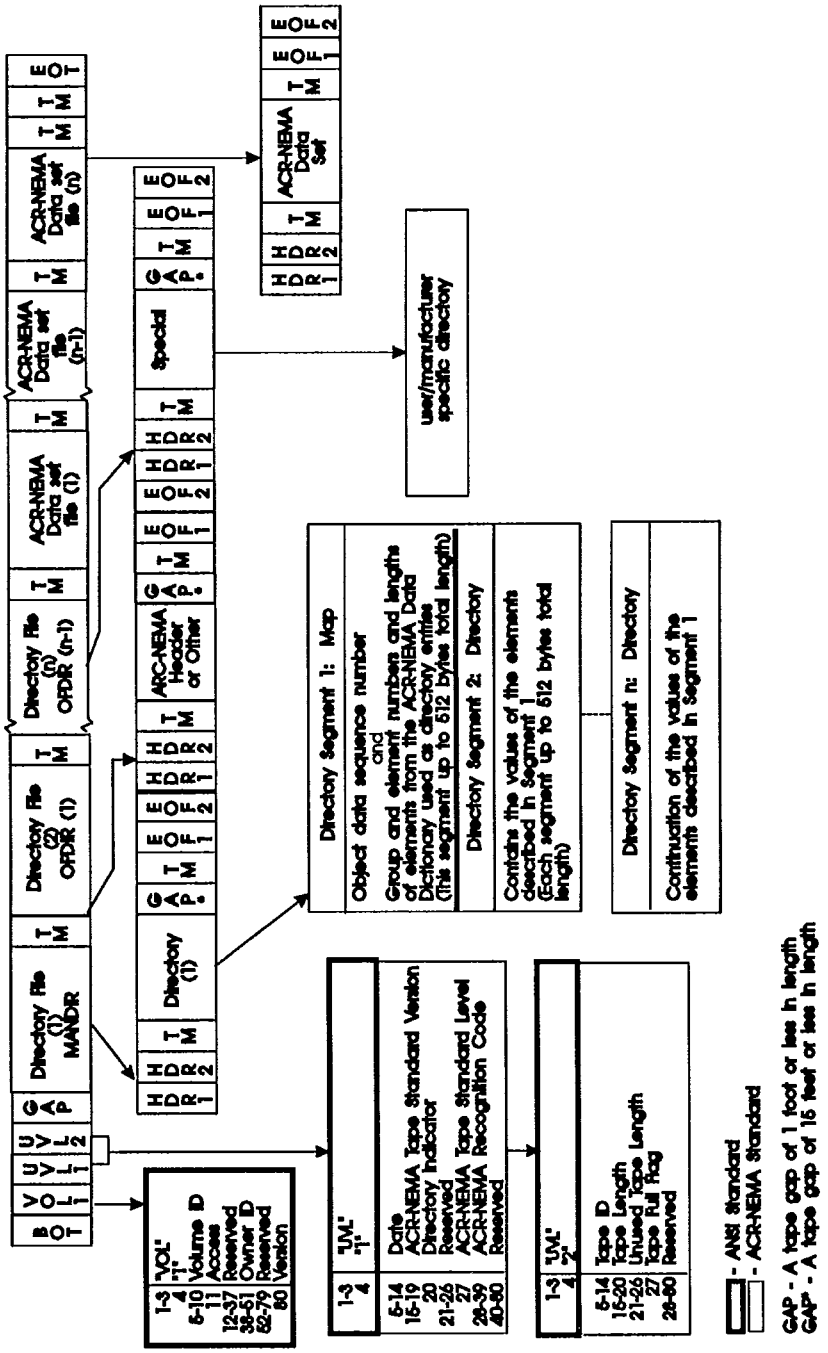

Figure 2–5
ACR-NEMA TAPE STANDARD LEVEL 4

Copyright National Electrical Manufacturers Association
Provided by IHS under license with NEMA
No reproduction or networking permitted without license from IHS
Not for Resale

Table 2-3 shows the structure of UVL2. A brief description of the elements is given below.

- Tape ID. A label supplied by the installation or owner to identify the tape.
- Tape Length. The nominal length of the tape in feet.
- Unused Tape Length. Length of tape remaining after writing (in feet).
- Tape Full Flag. Set to 31H when the user no longer desires to add data sets to the tape, zero (30H) if not full. If the flag is set, it shall take precedence over unused tape length.
- Reserved. Reserved for future use, ASCII spaces (20 H).

All fields in UVL2 shall contain only ASCII characters.

NEMA Standard 8-28-1991.

2.2.4.5 UVL3-9

Of the nine UVLs (UVL1-UVL9) permitted by ANSI X3.27, Section 8.4, the ACR-NEMA magnetic tape standard uses only two (UVL1 and UVL2). All User Volume Labels not reserved by this standard can be used for user specific purposes.

Authorized Engineering Information 8-28-1991.

2.2.4.6 UVL2 GAP

The gap following UVL2 is intended to facilitate the re-writing and updating of UVL2 when data is appended to the tape using ACR-NEMA tape level 4. This gap shall be between 0 and one foot in length and is in addition to the ANSI interrecord gap.

NEMA Standard 8-28-1991.

Additional information on the directory gap is found in 2.3.2.2.

Authorized Engineering Information 8-28-1991.

2.2.4.7 HDR1, HDR2, EOF1, AND EOF2

The ANSI Labels HDR1 and EOF1 as used by this standard contain specific values depending on the type of file they delimit. HDR1 and EOF1 are further discussed in 2.3.2.3 (Mandatory Directory), 2.3.2.8 (Optional Directories) and 2.3.3 (Data set).

Information required in HDR1 and HDR2 is described in ANSI specification X3.27, Section 8.5. The file identifier consists of 17 bytes, located in positions 5 through 21 of HDR1.

In HDR2 and EOF2, this standard fixes record format as "F". The record length is fixed at 2048 bytes ("02048"). Block length is the length of the blocks excluding labels on the tape (in bytes). Value without agreement between sending and receiving parties is 2048 bytes.

Usage of this file identifier section is specified within the description of each file type.

EOF1 and EOF2 are fully described by ANSI X3.27, Section 8.8.

NEMA Standard 8-28-1991.

EOF1 and EOF2 are the corresponding end-of-file labels for HDR1 and HDR2.

Authorized Engineering Information 8-28-1991.

2.2.4.8 TAPE MARK

The tape mark is a special control block recorded on magnetic tape to serve as a separator between files and file labels. The tape mark is defined in the ANSI standards for recorded magnetic tape.

NEMA Standard 8-28-1991.

2.2.4.9 EOT

EOT as defined by ANSI(X3.40, Section 2.3) is a photo-reflective marker placed on the tape for the purpose of indicating the end of the recording area.

NEMA Standard 8-28-1991.

2.3 FILES

2.3.1 Introduction

This standard defines two types of files: directories and data sets. Directories are further subdivided into mandatory and optional.

Authorized Engineering Information 8-28-1991.

Each file is enclosed by the ANSI Standard labels HDR1, HDR2, EOF1 and EOF2. These labels have specific contents which depend on the file enclosed.

NEMA Standard 8-28-1991.

2.3.2 DIRECTORY

Two categories of directories are defined by this standard: mandatory and optional. The mandatory directory (MANDIR) allows the user to obtain an overview of the contents of a specific tape. Optional directories contain either the ACR-NEMA header from the data set or additional information as defined by the writer of the tape.

NEMA Standard 8-28-1991.

If a user wishes, the number of images may be calculated and their related directories compiled before the tape is written, as in ACR-NEMA tape standard Level 2. To facilitate the practice of writing data sets to a tape first and compiling and updating the directory later, either a filler file (Level 3) or a gap (Level 4) is allowed by this standard. The filler file or gap allows the directory to be later replaced by a longer directory in a location on the tape before the data sets.

Authorized Engineering Information 8-28-1991.

Copyright National Electrical Manufacturers Association
Provided by IHS under license with NEMA
No reproduction or networking permitted without license from IHS
Not for Resale

Table 2-2
Elements in the User Volume Label 1 (UVL1)

No.	Element	Character Positions	Field Size (Bytes)
1.	Label identifier ("UVL")	1-3	3
2.	Label Number ("1")	4	1
3.	Date (yyyy . mm. dd)	5-14	10
4.	ACR-NEMA Tape Standard ("V1.0")	15-19	5
5.	Directory Indicator 30 H - No Directory 31 H - Only Mandatory Directory (MANDIR) 32 to 3nH - MANDIR and (n-1) Optional Directories (OPDIRn) where n ≤ 9	20	1
6	Reserved	21-26	6
7	Tape Standard Level 31 H - ACR-NEMA Tape Standard Level 1 32 H - ACR-NEMA Tape Standard Level 2 33 H - ACR-NEMA Tape Standard Level 3 34 H - ACR-NEMA Tape Standard Level 4	27	1
8.	ACR-NEMA Recognition Code ("ACR-NEMA 2.0")	28-39	12
9.	Reserved	40-80	50
			TOTAL - 80

2.3.2.1 FILLER FILES

Level 3 of the ACR-NEMA tape standard requires that a directory file be followed by a filler file to facilitate updating and extension of the directory without the use of a gap.

The filler file contains a total of (m+n) 2048 byte dummy records. The value of m is implementation specific, depending on how much space the user wants to reserve.

The value n shall be large enough to accommodate the situation in which a non-fatal error occurs and a particular system attempts to re-execute an I/O (write) operation before returning a fatal error. This number can be reduced if the retry capability is disabled.

NEMA Standard 8-28-1991.

The first filler record written contains the binary value m. The following records contain their sequence number as a binary value (record m-1 is filled with binary values m-1). These are followed by n records each containing binary zero.

Authorized Engineering Information 8-28-1991.

As a directory file is updated or extended, the entire portion between the end of the updated directory (TM, EOF1, EOF2, TM of the directory file) and HDR1, HDR2, TM of the filler file must be regenerated on the tape to ensure an intact directory file structure.

NEMA Standard 8-28-1991.

In the case of directory extension, fewer and fewer dummy records remain. A directory file should not be extended unless a check has been made to ensure that there is sufficient space left in the filler file. The space can be determined by reading the binary value in the first dummy record and calculating whether the extension fits. If the first dummy record in the filler file is already numbered 0, this indicates a DIRECTORY FULL condition, and no more entries or data set files can be added.

After an update or extension, the block immediately following the updated data may be corrupted (partly overwritten by the update), and the total block count in EOF1

Table 2-3
Elements in the Use Volume Label 2 (UVL2)
(ACR-NEMA Tape Standard Level 4)

No.	Element	Character Positions	Field Size (Bytes)
1.	Label Identifier ("UVL")	1-3	3
2.	Label Number ("2")	4	1
3.	Tape ID	5-14	10
4.	Tape Length	15-20	6
5.	Unused Tape Length	21-26	6
6.	Tape Full Flag	27	1
7.	Reserved	28-80	53
			TOTAL - 80

Copyright National Electrical Manufacturers Association
Provided by IHS under license with NEMA
No reproduction or networking permitted without license from IHS
Not for Resale

of the filler file may not reflect the actual number of blocks present. These error conditions should be ignored if they are reported in relation to a filler file. See Figure 2-6 for an illustration of a corrupted block.

Authorized Engineering Information 8-28-1991.

2.3.2.2. DIRECTORY GAP

ACR-NEMA Level 4 shall use a gap following the directory files for the purpose of allowing expansion or rewriting of these files. The length of this gap shall be 0 - 15 feet in addition to the ANSI interrecord gap. This gap shall be left between the last directory block and the tape mark.

NEMA Standard 8-28-1991.

Some drives support a command to create a gap. For those which do not, a possible work-around is to operate the drive in erase mode for "n" seconds where n is determined by the gap size and the write speed of the drive.

If a tape of Level 4 is copied and the gaps cannot be reproduced during copying, the copied tape should be closed for writing (by setting the tape full flag, for example) or the level of the tape should be changed to Level 2. Users should note that the contents of UVL2 in this case may not be accurate. Users should also be warned that some tape copy routines may omit the gap without setting the tape full flag or changing the level.

Authorized Engineering Information 8-28-1991.

2.3.2.3 MANDATORY DIRECTORY

Each ACR-NEMA tape that has a directory indicator flag value of ASCII "1" (0031H) shall contain only a mandatory directory identifying the data set files contained on tape. If any directories are present, the mandatory directory must appear first. Values of "2" to "9" (32-39H) indicate the presence of a mandatory directory followed by 1 to 8 optional directories, respectively. Whenever data is appended to the tape the directory shall be updated accordingly.

NEMA Standard 8-28-1991.

The mandatory directory is intended to be a reference tool permitting a user to obtain an overview of tape content without reading the entire tape. Complete identification is found in each data set file which contains the entire ACR-NEMA header.

Authorized Engineering Information 8-28-1991.

The directory shall consist of eight unique parts. These are: HDR1, HDR2, tape marks, directory map, data set IDs (1-n), if applicable, either a gap of less than 15 feet after the last ID or a filler file, EOF1 and EOF2. All of these parts, except the directory map, data set ID, and the gap or filler file, are specifically defined in ANSI standard X3.27, Section 8.5 through 8.8.

The file structure contains fixed length records of 2048 bytes. Each record contains four directory segments. If the last record in the directory uses fewer than four directory segments, the remaining segments shall be all ASCII encoded zeros (30H).

If the directory file length is less than the block length, the remainder of the block must be filled with the ANSI defined padded characters (5EH).

NEMA Standard 8-28-1991.

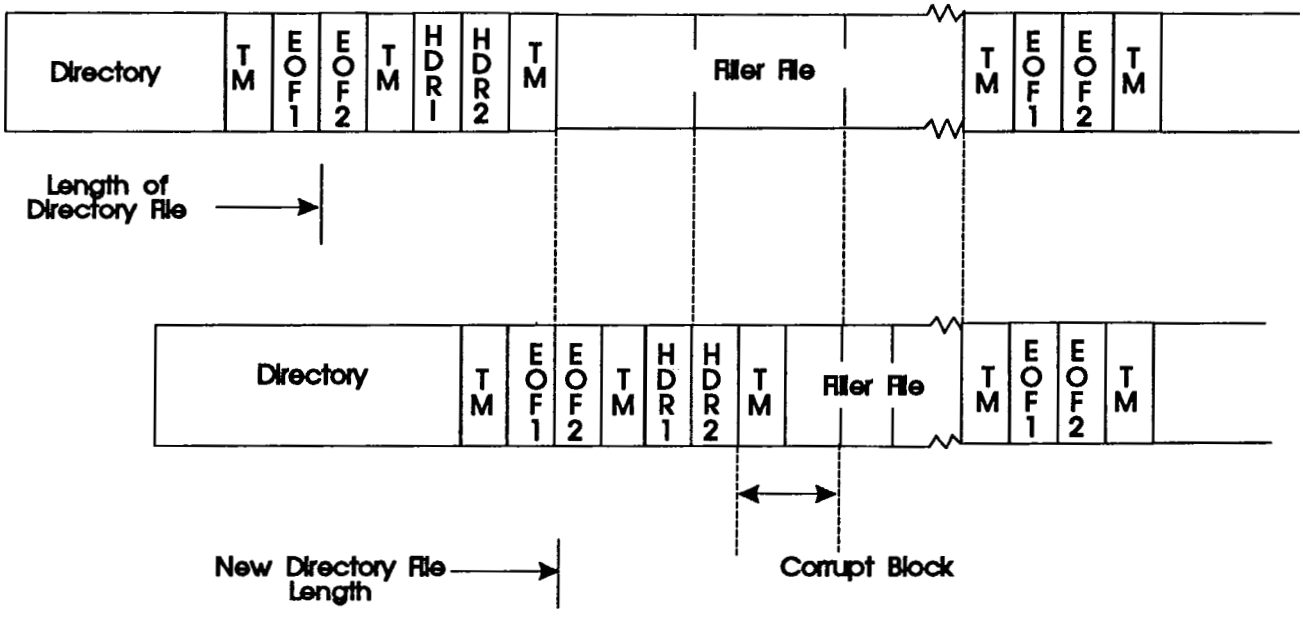

Figure 2–6
CORRUPT BLOCK FOLLOWING EXPANSION OF THE DIRECTORY (LEVEL 3)

Copyright National Electrical Manufacturers Association
Provided by IHS under license with NEMA
No reproduction or networking permitted without license from IHS
Not for Resale

2.3.2.4 HDR1 File Identifier For The Mandatory Directory

The file identifier field (character positions 5-21 of HDR1) shall contain "MANDIR" in the first six bytes, the other 11 characters must contain valid ASCII characters.

NEMA Standard 8-28-1991.

The file identifier field distinguishes between mandatory and optional directories and data set files.

Authorized Engineering Information 8-28-1991.

2.3.2.5 Directory Map

The first 512-byte segment of the directory shall contain a map of the directory which consists of ACR-NEMA group and data element numbers and lengths. The group and data element numbers (each 16-bit binary words) shall identify the constituents of the data set ID's which follow; the lengths (32-bit binary words) shall give the number of characters set aside for the value of the element in the data set ID. The order shall be group number, element number, length for the first data set ID followed by the same set for the following data set IDs. Groups must appear at most once and in ascending numeric order. Within each group, element numbers must appear at most once and in ascending numeric order. Any element whose value is given in ASCII may be used. The first entry, defined as group 0, data element 0, shall be the data set sequence number, a sequentially assigned number of this data set file relative to other data set files on the tape, where the first data set file is numbered 1. The length of Group 0, Element 0, gives the length of the data set sequence number. For compatibility with the data set label HDR1, this length is fixed at nine characters (see 2.3.3). This element shall be padded on the left with ASCII 0 (30 H). Unused bytes in the directory map must be filled with binary zeros.

In keeping with ACR-NEMA 300, group numbers, data element numbers, and lengths are all in binary. The end of the map is signified either by group = element = length = 0 or by a total of 512 bytes used.

NEMA Standard 8-28-1991.

Table 2-4 is an example implementation of this map using data elements likely to be useful as identifiers.

The use of elements from shadow groups in the directory is permitted but not recommended.

Authorized Engineering Information 8-28-1991.

2.3.2.6 Data Set IDs (1-N)

The data set IDs are 512-byte segments of the directory carrying the values for the elements listed in the directory map. Each data set file stored on the tape must have a corresponding data set ID and vice versa; data sets and corresponding data set IDs must be in the same order. Each data set ID on a given tape is described by the same directory map.

If the number of characters in the data set ID value defined by the directory map is larger than that of the value in the data set file, the remaining trailing portion in the data set ID is filled with ASCII spaces (20H). If the number of characters in the data set ID value defined by the directory map is smaller than that of the value in the data set file, the trailing characters are omitted (truncation).

All unused characters in the data set IDs are filled with ASCII spaces (20H).

NEMA Standard 8-28-1991.

2.3.2.7 EOF1 Of Directory File

EOF1 is the corresponding end-of-file label for the HDR1 of the directory file.

Authorized Engineering Information 8-28-1991.

2.3.2.8 Optional Directories

The standard permits up to eight optional directories. These files shall be identified by the ASCII characters "OPDIRN," where n is 1 to 8, in character positions 5 through 10 of HDR1. Character positions 11-21 contain any valid ASCII characters.

These files shall consist of records of 2048 bytes. The same padding as described for the mandatory directory is applicable within the record and the block.

If the ACR-NEMA headers are used in their entirety to form a directory, this directory must form the first optional directory (OPDIR1). In this case, character positions 5 through 10 of HDR1 contain "OPDIR1" and positions 11-18 contain "ACR-NEMA". The remainder of the file identifier field of HDR1 (positions 19-21) contain any valid ASCII characters.

NEMA Standard 8-28-1991.

2.3.3 Data Set

The data set files shall use the ANSI label structure. All groups of the ACR-NEMA message, except groups 0 and 1, form a data set. Each data set file shall begin with an HDR1 and HDR2. These labels shall conform to ANSI X3.27. In header 1, character positions 5 through 21 (the file identifier) must contain ASCII characters "DATASET" followed by the data set sequence number in character positions 12 through 17 (see 2.3.2.5), followed by 4 ASCII spaces (20 H).

NEMA Standard 8-28-1991.

Figure 2-1 shows the structure of the data set file.

Authorized Engineering Information 8-28-1991.

After HDR1 and HDR2, a single tape mark is written followed by consecutive 2048 byte portions of the ACR-NEMA data set. If the ACR-NEMA data set does not completely fill the last 2048 byte record, the space to the end of the record shall be padded with ASCII zeros (30 H). A tape mark follows this record or the record sequence filled with the ANSI required padding character (5E H) necessary to complete the block. The file shall be closed with an ANSI standard EOF1 and EOF2 label whose entries correspond to those in the opening HDR1 and HDR2.

NEMA Standard 8-28-1991.

Copyright National Electrical Manufacturers Association
Provided by IHS under license with NEMA
No reproduction or networking permitted without license from IHS
Not for Resale

Table 2-4
Directory Map Example

Group	Element	Length		Meaning	Character Positions in Data Set
0000	0000	0000	0006	Data set number	1-6
0008	0020	0000	000A	Study date	7-16
0008	0030	0000	000E	Study time	17-30
0008	0040	0000	0014	Data set type	31-50
0008	0041	0000	0028	Data set subtype	51-90
0008	0060	0000	000A	Modality	91-100
0008	0080	0000	0028	Institution ID	101-140
0008	1010	0000	000A	Station ID	141-150
0010	0010	0000	0028	Patient name	151-190
0010	0020	0000	0014	Patient ID	191-210
0020	0010	0000	000A	Study	211-220
0020	0011	0000	000A	Series	221-230
0020	0012	0000	000A	Acquisition	231-240
0020	0013	0000	000A	Image	241-250
0000	0000	0000	0000	End of map	

Note that binary representation does not represent tape order.

Copyright National Electrical Manufacturers Association
Provided by IHS under license with NEMA
No reproduction or networking permitted without license from IHS
Not for Resale

NEMA STANDARDIZATION BACKGROUND

The purpose of NEMA Standards, their classification, and status are set forth in certain clauses of the NEMA *Standardization Policies and Procedures* manual and are referenced below:

Purpose of Standards

National Electrical Manufacturers Association Standards are adopted in the public interest and are designed to eliminate misunderstandings between the manufacturer and the purchaser and to assist the purchaser in selecting and obtaining the proper product for their particular needs. Existence of a National Electrical Manufacturers Association Standard does not in any respect preclude any member or nonmember from manufacturing or selling products not conforming to the standard.

(Standardization Policies and Procedures, p. 1)

Definition of a Standard

A Standard of the National Electrical Manufacturers Association defines a product, process or procedure with reference to one or more of the following: nomenclature, composition, dimensions, tolerances, safety, operating characteristics, performance, rating, testing, and the service for which they are designed.

(Standardization Policies and Procedures, p. 2)

Dimensions

Where dimensions are given for interchangeability purposes, alternate dimensions satisfying the other provisions of the Standards Publication may be capable of otherwise equivalent performance.

(Standardization Policies and Procedures, p. 8)

Categories of Standards

National Electrical Manufacturers Association Standards are of three classes, which have received the affirmative vote of at least two-thirds of the Subdivision votes cast in the affirmative or negative:

1. NEMA Standard, which relates to a product, process, or procedure commercially standardized and subject to repetitive manufacture.
2. Suggested Standard for Future Design, which may not have been regularly applied to a commercial product, but which suggests a sound engineering approach to future development.
3. Adoptive Standard, which is adopted in whole or in part from the standards of another organization, either domestic, regional, or international.

(Standardization Policies and Procedures, pp. 7 & 16)

Authorized Engineering Information

Authorized Engineering Information consists of explanatory data and other engineering information of an informative character not falling within the classification of NEMA Standard or Suggested Standard for Future Design, which standard has received the affirmative vote of at least two-thirds of the Subdivision votes cast in the affirmative or negative.

(Standardization Policies and Procedures, pp. 7 & 16)

Identification of Status

Standards in NEMA Standards Publications are identified as "NEMA Standard," "Suggested Standard for Future Design," or "Adoptive Standard." These indicate the status of the standard. A statement incorporating the auxiliary verb "shall" indicates that compliance with a requirement is mandatory for compliance with the standard. These classes of standards are identified in the foreword or throughout the text.

The material identified as "Authorized Engineering Information" is designated similarly. Statements incorporating other auxiliary verbs such as "should," "may," etc. refer to authorized engineering information and not to procedures required for compliance with the standard.

Copyright National Electrical Manufacturers Association
Provided by IHS under license with NEMA
No reproduction or networking permitted without license from IHS
Not for Resale

MEDICAL PICTURE ARCHIVING AND COMMUNICATIONS SYSTEMS (MED-PACS) SECTION OF THE NATIONAL ELECTRICAL MANUFACTURERS ASSOCIATION

MEMBER COMPANIES

Agfa Division of Miles Inc.
Orangeburg, NY 10962

Camtronics Ltd. Medical Systems
Hartland, WI 53029

Dejarnette Research Systems
Towson, MD 21204

E.I. DuPont De Nemours, Inc.
Wilmington, DE 19880-0708

Eastman Kodak Company
Rochester, NY 14653-9014

Eigen
Nevada City, CA 95959

GE Medical Systems
Milwaukee, WI 53201

Merge Technologies, Inc.
Milwaukee, WI 53214-3151

Oldelft Corporation of America
Fairfax, VA 22031

Philips Medical Systems
North American Company
Shelton, CT 06484

Picker International, Inc
Highland Heights, OH 44143

Polaroid Corporation
Cambridge, MA 02139

Siemens Medical Systems, Inc
Iselin, NJ 08830

SMS Corporation,
Malvern, PA 19355

Sony Medical Systems
Park Ridge, NJ 07656

3M Medical Imaging Systems Division
St. Paul, MN 55144-1000

Toshiba America Medical Systems Inc
Tustin, CA 92680-2068

Vortech Data, Inc
Richardson, TX 75080

Copyright National Electrical Manufacturers Association
Provided by IHS under license with NEMA
No reproduction or networking permitted without license from IHS
Not for Resale