NEMA PR*4 83 ■ 6470247 0019610 2 ■

A-14-03
A-16-03
A-17-23

STANDARDS PUBLICATION/NO. PR 4

nema

Plugs, Receptacles, and Cable Connectors of the Pin and Sleeve Type for Industrial Use

NEMA

NATIONAL ELECTRICAL MANUFACTURERS ASSOCIATION ■ 2101 L STREET N.W., WASHINGTON, D.C. 20037

Copyright National Electrical Manufacturers Association
Provided by IHS under license with NEMA
No reproduction or networking permitted without license from IHS

Not for Resale

NEMA PR 4-1983(R1989)

PR 4

PLUGS, RECEPTACLES, AND CABLE CONNECTORS OF THE PIN AND SLEEVE TYPE FOR INDUSTRIAL USE

Published by

National Electrical Manufacturers Association
2101 L Street, N.W.
Washington, D.C. 20037

©1990 by National Electrical Manufacturers Association

Copyright National Electrical Manufacturers Association
Provided by IHS under license with NEMA
No reproduction or networking permitted without license from IHS

Not for Resale

Table of Contents

Foreword i
Scope i

Section 1 REFERENCED STANDARDS AND DEFINITIONS 1

Section 2 GENERAL REQUIREMENTS 3

Section 3 TESTING AND EVALUATION 7

Copyright National Electrical Manufacturers Association
Provided by IHS under license with NEMA
No reproduction or networking permitted without license from IHS

Not for Resale

Foreword

This NEMA Standards Publication was prepared by the Technical Committee of the Pin and Sleeve Plug, Receptacle and Connector Section to serve as a basic standard for the industry.

PR 4-1983 was reaffirmed by the Codes and Standards Committee on November 16, 1989. PR 4-1983(R 1989) will be periodically reviewed and revised by the Section to keep it up-to-date with advancing technology.

Proposed or recommended revisions should be submitted to:

Vice President, Engineering
National Electrical Manufacturers Association
2101 L Street, N.W.
Washington, DC 20037

Scope

These requirements cover plugs, receptacles, motor plugs, and connectors for use in accordance with the *National Electrical Code* rated up to 800 amperes and up to 600 volts ac or dc for either indoor or outdoor nonhazardous locations.

Copyright National Electrical Manufacturers Association
Provided by IHS under license with NEMA
No reproduction or networking permitted without license from IHS
Not for Resale

Section 1
REFERENCED STANDARDS AND DEFINITIONS

1.1 REFERENCED STANDARDS

The following standards relate to this publication and copies are available from the sources indicated.

American National Standards Institute
2430 Broadway
New York, NY 10018

ANSI/ASME B 46.1-1985	*Surface Texture*
ANSI/NFPA 70-1990	*National Electrical Code*
ANSI/UL 20-1986	*General Use Snap Switches*
ANSI/UL 44-1983	*Standard for Rubber Insulated Wires and Cables*
ANSI/UL 98-1987	*Enclosed and Dead-Front Switches*
ANSI/UL 486A-1980	*Wire Connectors and Soldering Lugs for Use with Copper Conductors*
ANSI/UL 498-1986	*Attachment Plugs and Receptacles*
ANSI/UL 514A-1983	*Metallic Outlet Boxes*
ANSI/UL 1010-1986	*Receptacle-Plug Combinations for Use in Hazardous (Classified) Locations*

American Society for Testing and Materials
1916 Race Street
Philadelphia, PA 19103

E 28-67 (R1982)	*Standard Test Method for Softening Point by Ring-and-Ball Apparatus*

Canadian Standards Association
178 Rexdale Boulevard
Rexdale, Ontario
Canada M9W 1R3

C22.2, No. 0-M1982	*General Requirements—Electrical Code, Part II*
C22.2, No. 159-M1987	*Plugs and Receptacles for Use in Class I, Groups A, B, C, D, and Class II, Groups E, F, and G.*
C22.2, No. 182.1-1988	*Industrial Type Special Use Attachment Plugs, Receptacles and Connectors*
C22.2, No. 182.2-1988	*Industrial Locking Type, Special Use Attachment Plugs, Receptacles ar Connectors*
C22.2, No. 182.3-M1987	*Special Use Attachment Plugs, Receptacles and Connectors*

Copyright National Electrical Manufacturers Association
Provided by IHS under license with NEMA
No reproduction or networking permitted without license from IHS
Not for Resale

National Electrical Manufacturers Association
2101 L Street, N.W.
Washington, D.C. 20037

250-1985 *Enclosures for Electrical Equipment (1000 volts maximum)*

National Fire Protection Association
Batterymarch Park
Quincy, MA 02269

See ANSI/NFPA listed above.

Underwriters Laboratories, Inc.
333 Pfingsten Road
Northbrook, IL 60062

See ANSI/UL standards listed above.

1.2 DEFINITIONS

CABLE CONNECTOR

A cable connector is a portable receptacle which is intended to provide power. It is provided with means for attachments of flexible cord or cable and is not intended for permanent mounting.

NEMA Standard 1-11-1983.

MOTOR PLUG (INLET)

A motor plug is a permanently mounted plug which is intended to receive power from a cable connector.

NEMA Standard 1-11-1983.

PLUG

A plug is a device which is intended to receive power when inserted in a receptacle. It establishes connection between conductors of the attached flexible cord or cable and the conductors connected to the receptacle or cable connector.

NEMA Standard 1-11-1983.

RECEPTACLE (OUTLET)

A receptacle is a device which is intended to provide power to an inserted plug. It is usually installed as a fixed outlet or on equipment.

NEMA Standard 1-11-1983.

Copyright National Electrical Manufacturers Association
Provided by IHS under license with NEMA
No reproduction or networking permitted without license from IHS
Not for Resale

Section 2
GENERAL REQUIREMENTS

2.1 GENERAL

2.1.1 Construction

Devices that meet the requirements of this standard and the requirements of Underwriters Laboratories, Inc. are suitable for heavy-duty industrial usage.

NEMA Standard 1-11-1983.

2.2 MATERIALS

2.2.1 Insulating Bases

Insulating bases supporting live electrical parts in the arcing chamber shall be of a material, the electrical or mechanical integrity of which is not affected by the chemical, electrical, mechanical, and thermal environment encountered in use.

NEMA Standard 1-11-1983.

2.2.2 Non-metallic Materials

Among the factors, taken into consideration when non-metallic materials are used, are their: (1) physical strength, (2) resistance to impact, (3) degradation of moisture-absorptive properties, (4) combustibility, (5) resistance to corrosion, (6) resistance to arc tracking, (7) resistance to distortion at temperatures to which the enclosure may be subjected under conditions of use. All of these factors are considered with respect to thermal aging.

Authorized Engineering Information 1-11-1983.

2.2.3 Metallic Parts

All metal parts shall be non-corrosive or shall be protected against corrosion, per tests in 3.12.

NEMA Standard 1-11-1983.

2.3 CURRENT CARRYING PARTS

2.3.1 Secureness of Parts

All uninsulated live parts shall be secured in place so that a reduction in spacing as required in Table 2-2 is not likely.

NEMA Standard 1-11-1983.

2.3.2 Live Contacts

Live contacts of a connector or receptacle shall be recessed or protected in their insulator at the plug end such that unintentional touching is not likely.

Contacts, including the grounding contact, shall be prevented from any mode of displacement relative to the insulating body to which they are mounted, if such displacement would adversely affect the performance or spacing of the device.

NEMA Standard 1-11-1983.

2.3.3 Accessibility of Energized Parts

Energized parts shall not be accessible during insertion or withdrawal of the plug.

NEMA Standard 1-11-1983.

2.4 GROUNDING PARTS

2.4.1 Interconnection of Equipment Grounding Conductor

Except as indicated in 2.4.2, a receptacle, plug, cable connector, and motor plug shall have a separate contact for interconnection of the equipment grounding conductor.

NEMA Standard 1-11-1983.

2.4.2 Metal Shell

The metal shell of a plug or connector may be used as the grounding contact member, if:

a. The part of the shell that is depended upon for grounding continuity is unlikely to be painted or otherwise subjected to conditions that may result in loss of grounding continuity, and

b. At least one or more separate spring type members are incorporated in the receptacle or connector to provide substantial grounding path continuity with the plug, and

c. The receptacle or connector grounding members are protected against damage.

Authorized Engineering Information 1-11-1983.

2.4.3 Electrical Continuity

Unless the plug, receptacle, cable connector, and motor plug are of the interlocked type that requires disconnection of the supply circuit before the plug can be inserted or removed, the grounding contact in the receptacle shall be so located and formed that the path of electrical continuity to the grounding contact of the mating plug is completed before continuity is established between any other contact and its respective contact on the plug. This grounding path shall be substantial and reliable when the plug is inserted in the receptacle.

NEMA Standard 1-11-1983.

2.4.4 Material

The grounding path, except for the metal housing, shall be of copper or copper base alloys. Precious metal contacts, when provided, shall have an electrical conductivity equal to or greater than the copper or copper alloy to which they are attached.

NEMA Standard 11-16-1989.

2.4.5 Rivets, Bolts, and Clamps

A rivet, bolt, or clamp that is used to secure parts in the grounding path, but that is not an essential conductor in the grounding path, shall be of a material suitable for the purpose.

Copyright National Electrical Manufacturers Association
Provided by IHS under license with NEMA
No reproduction or networking permitted without license from IHS

Not for Resale

A copper-base alloy rivet, which is used to hold parts together in the grounding-contact path or forms a part of the grounding path, shall contain not less than 80 percent copper.

A connection in the grounding-contact path shall be secured by riveting, bolting, welding or equivalent positive means, capable of carrying ground fault current.

NEMA Standard 1-11-1983.

2.4.6 Non-current-carrying Metal Parts

All exposed non-current-carrying metal parts of a device, that are liable to become energized, shall be conductively connected to the point of attachment of the equipment ground.

NEMA Standard 1-11-1983.

2.5 TERMINATIONS

2.5.1 Ampacity

A receptacle, a cable connector, and a plug shall be provided with suitable field-wiring terminals or leads for the connection of conductors having an ampacity, in accordance with the *National Electrical Code*, not less than the current rating of the mating parts.

NEMA Standard 1-11-1983.

2.5.2 Conductor Temperature Ratings

It is to be assumed that 60°C (140°F) wire will be used for connections to a device rated at 80 amperes or less, and that 75°C (167°F) wire will be used with a device rated at more than 80 amperes.

Authorized Engineering Information 1-11-1983.

2.5.3 Receptacle Terminals

Wiring terminals of a receptacle shall be so located or protected that they are not likely to be forced against the wiring in the terminal box or compartment during installation.

NEMA Standard 1-11-1983.

2.5.4 Grounding Terminals

Field wiring terminals intended solely for connection of an equipment-grounding conductor shall be capable of securing a conductor of the size suitable for the particular application, in accordance with the *National Electrical Code*. Connections that depend upon solder shall not be used for the grounding terminal.

NEMA Standard 1-11-1983.

2.5.5 Conductor Terminations

Except as indicated in 2.5.4 and the following paragraphs, a field-wiring terminal shall be provided with a wire binding screw, soldering lug or well, crimp, or with a suitable pressure wire connector.

A wire-binding screw shall not be employed as a field-wiring terminal intended to accommodate a No. 8 AWG or larger conductor. Wire binding screw terminals shall have an upturned lug, or the equivalent, to hold the wire in position.

Other forms of construction shall be permitted if the ampacity and mechanical features are found to be equivalent to those of one of the connections described in 2.5.5.

NEMA Standard 1-11-1983.

2.5.6 Terminal Rigidity

A field-wiring terminal shall be prevented from turning or shifting in position, by means other than friction between surfaces, if such turning affects the assembly or spacings.

A limited degree of movement, that allows the contacts of the mating plug receptacle or cable connector to be self-aligning, shall be permitted.

NEMA Standard 1-11-1983.

2.5.7 Terminal Plate

A terminal plate tapped for a wire-binding screw shall be metal not less than 0.050-inch thick, except that a plate not less than 0.030-inch thick is acceptable if the tapped threads have adequate mechanical strength. There shall be two or more full threads in the metal, which may be extruded if necessary to provide the threads.

NEMA Standard 1-11-1983.

2.5.8 Wire-Binding Screw

A wire-binding screw shall thread into metal.

NEMA Standard 1-11-1983.

2.5.9 Identification of the Equipment Grounding Terminal

The terminal for the connection of an equipment-grounding conductor shall have a permanent identification that is readily recognizable during installation. The exception is when a device is so constructed that the factory installed bond between the terminal and exposed dead-metal parts is readily visible, and the terminal for the connection of the grounding conductor is obvious. The terminal marking shall be one of the following:

a. A terminal screw that is not readily removable and has a slotted hexagonal green-colored head;

b. A hexagonal green-colored nut that is not readily removable from a threaded terminal stud;

c. A visible pressure wire connector that has a green-colored body or appendage that is not readily removable from the connector; or

d. A concealed pressure wire connector identified in accordance with the following:

If a pressure wire connector at the equipment-grounding terminal is located within the insulating

Copyright National Electrical Manufacturers Association
Provided by IHS under license with NEMA
No reproduction or networking permitted without license from IHS
Not for Resale

body and is not readily visible, the wire-entrance hole for a connection to that terminal shall be identified by one of the following:

a. A distinct green-colored area immediately adjacent to the wire-entrance hole or

b. The letter or word, "G", "GR", "GND", "Ground", "Grounding", or "Green" distinctively marked immediately adjacent to the wire-entrance hole in letters at least 1/16 inch high.

A readily removable (not staked or otherwise held captive) part of an equipment-grounding terminal, such as a setscrew or a clamping member, shall not be colored green or otherwise identified as part of the grounding terminal if the part may be interchanged with a similar part of another terminal on the device.

The surface of an insulated lead intended solely for the connection on an equipment-grounding conductor shall be green, with or without one or more yellow stripes, and no other lead shall be so identified.

The requirements relating to color coding of a lead, for identification, do not apply to internal wiring that is not visible in a wiring compartment in which field connections are to be made.

NEMA Standard 1-11-1983.

2.5.10 Length of Lead

The free length of a lead inside an outlet box or wiring compartment shall be 4 inches or more, if the lead is intended for field connection to an external circuit, except that the length of a grounding lead when provided shall not be less than 6 inches.

NEMA Standard 1-11-1983.

2.5.11 Tubular Sleeve Insulation

In a device, having insulation in the form of a tubular sleeve and intended to receive only one conductor in any opening, all live parts within the sleeve shall be recessed from the edge of the opening for the wire in accordance with Table 2-1:

NEMA Standard 1-11-1983.

Table 2-1
MINIMUM ACCEPTABLE RECESSING OF LIVE PARTS

Wire Size, AWG	Minimum Recessing, Inch
10 and smaller	3/32
8-4	1/8
2-1	11/64
0	15/64
00	19/64
000-0000	25/64
250-600 MCM	1/2

2.6 ASSEMBLY

2.6.1 Wiring

A device shall be capable of being readily wired in accordance with the manufacturer's instructions.

NEMA Standard 1-11-1983.

2.6.2 Polarization

A device involving two or more pieces shall be so designed that any intended polarization can not be defeated by improper assembly during installation.

NEMA Standard 1-11-1983.

2.6.3 Sealing Compound

A sealing compound shall be insulating, waterproof, and shall not soften at a temperature less than 93°C (199°F), if in contact with live parts.

NEMA Standard 1-11-1983.

2.6.4 Electrical Contacts

Positive electrical contact shall be reliably maintained, where a connection is made between current-carrying parts.

NEMA Standard 1-11-1983.

2.6.5 Mating Plug

Plugs shall be designed to mate with specific receptacles or connectors.

NEMA Standard 1-11-1983.

2.6.6 Electrical Spacing

Minimum spacings shall be as shown in Table 2-2.

Table 2-2
MINIMUM ELECTRICAL SPACINGS, INCHES

Minimum Spacings, Inches	0-200 AMP Rating		Over 200 AMP Rating		
	Voltage Rating of Device		Voltage Rating of Device		
	0-300 Volts	301-600 Volts	51-380 Volts	381-500 Volts	Over 500 Volts
Between any uninsulated live metal part and (1) an uninsulated live metal part of opposite polarity, (2) an uninsulated grounded dead metal part or (3) an exposed dead metal part which is isolated (insulated)					
Through air	3/64	1/8	5/32	1/4	5/16
Over surface	3/64	1/8	5/32	1/4	3/8

NEMA Standard 1-11-1983.

Copyright National Electrical Manufacturers Association
Provided by IHS under license with NEMA
No reproduction or networking permitted without license from IHS
Not for Resale

2.7 CORROSION PROTECTION AND RAINTIGHTNESS

2.7.1 Ferrous Metal Parts

Ferrous metal parts (except stainless steel) shall be protected against corrosion by plating, enameling, painting, varnishing, or lacquering. Conduit entrances shall provide ground continuity.

Brass, copper, or lead-alloy (terne) shall not be used as plating of ferrous metal parts for protection against corrosion, as stated in 3.12.

NEMA Standard 1-11-1983.

2.7.2 Moisture Resistance

An enclosure intended for outdoor use shall be classified as in 3.9.

NEMA Standard 1-11-1983.

2.7.3 Gaskets

A gasket of an elastomeric, a thermoplastic material or a composition gasket utilizing an elastomeric material employed to make an enclosure moisture resistant, shall be adequately resistant to aging as determined by accelerated-aging tests, per 3.6 or 3.7.

NEMA Standard 1-11-1983.

2.8 PLUG AND CONNECTOR ENCLOSURES

2.8.1 Cord or Cable Opening

An enclosure shall not be provided with more than one cord or cable opening.

NEMA Standard 1-11-1983.

2.8.2 Metallic Enclosures

An enclosure may be of iron, steel, copper, brass, bronze, or aluminum alloys containing not less than 80 percent aluminum. A metal such as zinc or magnesium, or their alloys, should not be used.

Authorized Engineering Information 1-11-1983.

2.8.3 Non-metallic Enclosure

An enclosure may be made of a polymeric material if the material and design have been investigated and found suitable for the purpose.

Authorized Engineering Information 1-11-1983.

2.8.4 Mechanical Strength

The thickness of an enclosure should have the strength and rigidity for its use. There should be no increase in shock and fire hazard in case of total or partial collapse with resulting reduction in spacings, loosening, or displacement of parts, or other serious defects, per 3.18.

Authorized Engineering Information 1-11-1983.

2.9 STRAIN RELIEF

2.9.1 Cord or Cable Grip

A cord or cable grip shall be provided so that it permits the flexible supply cord or cable to be readily replaced, and prevents strain at conductor connections within the terminal enclosure. If the cord or cable grip is threaded to the plug enclosure, it shall form a tight engagement or shall be secured against turning or lossening by means of a setscrew or the equivalent. The grip and cord entry shall be smooth and free from sharp edges that may damage the jacket of the flexible cord, per 3.17.

NEMA Standard 1-11-1983.

2.9.2 Cord or Cable Sizes

A plug or cable connector for power connection shall have provision for connection of extra-hard usage flexible cord. If a range of flexible cord or cable sizes is intended to be employed, the strain relief means shall be suitable for all sizes in the range.

NEMA Standard 1-11-1983.

2.10 RECEPTACLE ENCLOSURES

2.10.1 Receptacle Enclosure

The receptacle enclosure housing the electrical components, if made of metal, shall be iron, steel, copper, brass, bronze, or aluminum or its alloys containing not less than 80 percent aluminum. *Metal such as zinc or magnesium, or their alloys, should not be used.

NEMA Standard 1-11-1983.

*A receptacle enclosure may be made of a polymeric material if the material and design have been investigated and found suitable for the purpose.

A snap lid or screw cover that covers a receptacle opening, when the device is not in use, is not restricted as to material.

Authorized Engineering Information 1-11-983.

Copyright National Electrical Manufacturers Association
Provided by IHS under license with NEMA
No reproduction or networking permitted without license from IHS
Not for Resale

Section 3
TESTING AND EVALUATION

3.1 GENERAL REQUIREMENTS

Plugs, receptacles, cable connectors, and motor plugs shall be designed and constructed to assure reliable and safe performance. They shall be tested in accordance with the requirements in Section 3.

Compliance is checked by carrying out specified tests.

NEMA Standard 1-11-1983.

3.2 TYPE TESTS

Tests are type tests and shall be permitted to represent a family of devices. Unless otherwise indicated, samples shall be tested as delivered at an ambient temperature of 25 ± 15°C. The tests are made at rated frequency.

NEMA Standard 1-11-1983.

3.3 TEST SEQUENCE

Unless otherwise indicated, tests shall be made in the order presented in Section 3.

NEMA Standard 1-11-1983.

3.4 NUMBER OF SAMPLES

Three samples shall be subjected to the appropriate tests. Whenever both dc and ac tests are required, separate samples shall be used for each rating.

NEMA Standard 1-11-1983.

3.5 TEST EVALUATION

Compliance with this standard requires that all samples tested meet the requirements of the applicable test. If one sample fails in a test, that test and those preceding, which may have influenced the result of that test, shall be repeated on another set of three samples, all of which shall then comply with the repeated tests.

NEMA Standard 1-11-1983.

(In general, it will only be necessary to repeat the test which caused the failure, unless the sample fails one of the following tests:

No-Load Endurance
Endurance with Load
Temperature Rise Test

In the event of failure of any of those three tests, the above mentioned tests should be repeated.)

Authorized Engineering Information 1-11-1983.

3.6 RUBBER MATERIALS

A molded rubber handle body shall show no apparent deterioration, and shall show no greater change in hardness than five numbers, as the result of a 96-hour exposure to oxygen at a pressure of 300 ± 10 lbs. per square inch gauge (psig) and a temperature of 70.0 ± 1.0°C (158.0 ± 1.8°F).

If possible, the molded rubber component shall be tested assembled to its plug or connector. The hardness of the rubber shall be an average of five readings with a suitable gauge. The device shall then be exposed to oxygen for 96 hours in accordance with the method described in the *Standard for Rubber-insulated Wires and Cables,* UL44. The device shall be allowed to rest at room temperature for four or more hours after removal from the oxygen bomb. The hardness is determined again as the average of the five readings. The difference between the average original hardness reading and the average reading taken after exposure to oxygen, is the change in hardness.

The accelerated-aging test shall be made on samples of each color of rubber and on samples of each basic rubber compound employed for the component.

NEMA Standard 1-11-1983.

3.7 THERMOPLASTIC MATERIAL

Tests, to determine the suitability of the material, shall be made after exposure for 96 hours in a full-draft circulating air oven at a temperature of 100 ± 1.0°C (212 ± 1.8°F).

NEMA Standard 1-11-1983.

3.8 INSERTION AND WITHDRAWAL FORCES

The pressure exerted by mating contacts of a plug with receptacle or connector shall be insufficient to prevent manual insertion and withdrawal of the plug, but shall be sufficient to prevent it from working out of the receptacle or connector in normal use.

Compliance shall be checked by determining the force necessary to withdraw test plugs from the sample, mounted so that the axes of the contact tubes are vertical with the contact openings downwards.

The weight of the test plug together with a supplementary weight, shall exert a force equal to the minimum withdrawal force shown in Table 3-1 or twice the weight of the test plug, whichever is greater, without disengaging the plug.

Table 3-1
DEVICE RATING VS. WITHDRAWAL FORCE

Device Rating (Amperes)	Minimum Withdrawal Force Lbs.
15	4
20	5
30	6
60	15
100	20
200 (and above)	25

Copyright National Electrical Manufacturers Association
Provided by IHS under license with NEMA
No reproduction or networking permitted without license from IHS

Not for Resale

If the plug, receptacle and connector are of the delayed-action or interlocked type, the requirements of 3.8 do not apply.

NEMA Standard 1-11-1983.

3.9 MOISTURE RESISTANCE

Enclosures for mounting devices may be classified in accordance with NEMA Standards Publication No. 250, *Enclosures for Electrical Equipment (1000 Volts Maximum)*, in lieu of 3.9. (This sentence is approved as Authorized Engineering Information.)

3.9.1 Performance Criteria

Plugs, receptacles, and connectors requiring a degree of moisture protection shall prevent the entrance of water when subjected to the tests associated with their classifications, as described in this section. After testing, examination shall show that water has not entered the samples to any appreciable extent, will not interfere with the safe performance of the device, and has not reached live parts.

3.9.2 Sample Preparation

Test samples shall be fitted with cable or conduit and installed as intended in actual service, in accordance with the assembly and installation instructions. Receptacles shall be mounted on a vertical surface, with any drains present in the lowest position.

3.9.3 Classification

3.9.3.1 Damp Location

These tests shall be performed with a receptacle only.

A cover that requires positioning or movement in normal use shall remain functional after 1,000 cycles of operation.

Locate the test sample, under a water spray apparatus, consisting of three spray heads constructed in accordance with the details illustrated in Figure 3-1 and mounted in a water supply pipe rack as illustrated in Figure 3-2. Maintain the water pressure at each spray head at approximately 5 pounds per-square-inch (35) kilopascals. The distance between the center nozzle and the test sample shall be approximately 5 feet [1.5 meters (m)]. Bring the test sample into the focal area of the three spray heads in such a position and under such conditions that water will be most likely to enter, except that consideration shall be given to the normal mounting position.

A large, flat surface shall be so positioned that the surface is horizontal and 1 foot (0.3m) below the centerline of the test sample.

The water spray shall be applied for one hour.

3.9.3.2 Wet Location With Cover Closed

These tests shall be performed with a receptacle only.

The test sample shall be subjected to the water spray test for damp locations (3.9.3.1).

The test sample shall then be located 3 feet (0.9 m) horizontally from and 2 feet (0.6 m) above a spray head as illustrated in Figure 3-1. Position the spray head so it is aimed directly at the test sample. Maintain the water pressure at 15 pounds per square inch (100 kP).

The water spray shall be applied for one hour.

3.9.3.3 Wet Location

These tests shall be performed with a receptacle only, and then repeated with a plug in the receptacle.

The test samples shall be subjected to both water spray tests referenced in (3.9.3.2).

3.9.3.4 Marine Type

These test shall be performed with a receptacle only, and then repeated with a plug in the receptacle.

A solid stream of water from a nozzle not less than 1 inch (25 mm) in diameter and under a pressure of 15 pounds-per-square-inch (110 kP) at the nozzle shall be directed at the test sample from a distance of 10 feet (3.05 m) for 5 minutes.

3.9.3.5 Watertight

These tests shall be performed with a mated plug and connector.

The test sample shall be immersed for 24 hours in water at a temperature of 25 ± 5°C, the highest point of the sample being about 2 inches below the water level and the longitudinal axis being parallel to the surface of the water.

The test sample shall then be examined for conformance with the general performance criteria.

NEMA Standard 1-11-1983.

3.10 HUMIDITY

Equipment shall not be adversely affected by humid conditions which may occur in anticipated use.

Compliance is checked by the humidity treatment described herein, followed immediately by the measurement of the insulation resistance and by the dielectric strength test, specified in 3.11. Cable entries, if any, are left open. If knock-outs are provided, one of them is opened.

Covers which can be removed without the aid of a tool, are removed and subjected to the humidity treatment with the main part; spring lids are open during this treatment.

The humidity treatment is carried out in a humidity cabinet containing air with a relative humidity maintained between 91 and 95 percent. The temperature of the air, at all places where samples can be located, is maintained within 1°C of any convenient value t between 20 and 30°C.

Before being placed in the humidity cabinet, the samples are brought to a temperature between t and t + 4°C.

Copyright National Electrical Manufacturers Association
Provided by IHS under license with NEMA
No reproduction or networking permitted without license from IHS
Not for Resale

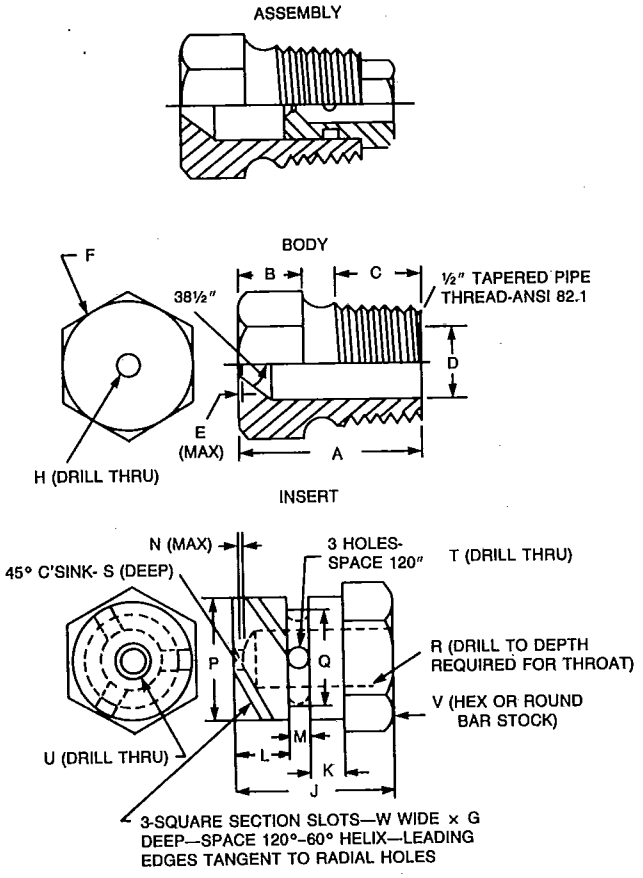

Figure 3-1. RAIN-TEST SPRAY HEAD

Item	inch	mm	Item	inch	mm
A	1 7/32	31.0	N	1/32	08.0
B	7/16	11.0	P	.575	14.61
C	9/16	14.0		.576	14.63
D	.578	14.68	Q	.453	11.51
	.580	14.73		.454	11.53
E	1/64	0.40	R	1/4	6.35
F	[c]	[c]	S	1/32	0.80
G	.06	1.52	T	(No. 35)[b]	2.79
N	(No. 9)[b]	5.0	U	(No. 40)[b]	2.49
J	23/32	18.3	V	5/8	16.0
K	5/32	3.97	W	0.06	1.52
L	1/4	6.35			
M	3/32	2.38			

*[a] —Molded nylon Rain-Test Spray Heads are available from Underwriters Laboratories, Inc.
*[b] —ANSI B94.11 Drill Size.
*[c] —Optional—To serve as wrench grip.

NEMA Standard 1-11-1983.
*Authorized Engineering Information 1-11-1983.

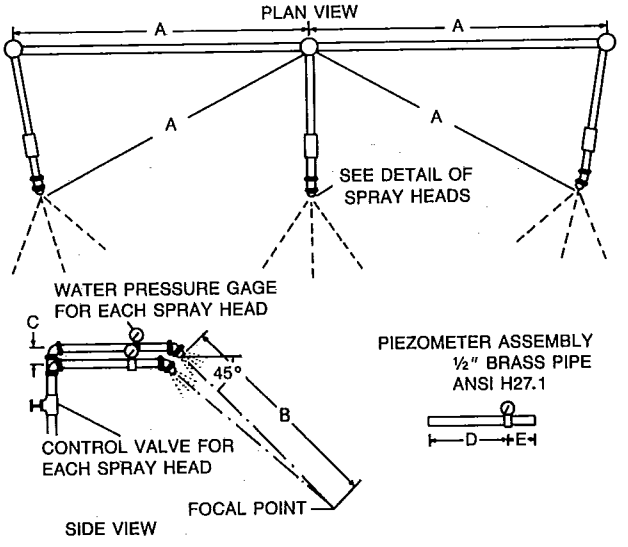

Figure 3-2. RAIN-TEST SPRAY-HEAD PIPING

Item	inch	mm
A	28	710
B	55	1400
C	2¼	55
D	9	230
E	3	75

NEMA Standard 1-11-1983.

Copyright National Electrical Manufacturers Association
Provided by IHS under license with NEMA
No reproduction or networking permitted without license from IHS
Not for Resale

The samples are kept in the cabinet for:

2 days (48 hours) for ordinary equipment,

7 days (168 hours) for moisture resistant equipment.

In most cases, the samples may be brought to temperature specified, by keeping them at this temperature for at least 4 hours before the humidity treatment.

A relative humidity between 91 and 95 percent can be obtained by placing in the humidity cabinet a saturated solution of sodium sulphate (Na_2SO_4) or potassium nitrate (KNO_3) in water, having a sufficiently large contact surface with the air.

In order to achieve the specified conditions within the cabinet, it is necessary to ensure constant circulation of the air within and, in general, to use a cabinet which is thermally insulated.

After this treatment, the samples shall show no damage within the meaning of the test in 3.11.

NEMA Standard 1-11-1983.

3.11 INSULATION RESISTANCE AND DIELECTRIC STRENGTH

The insulation resistance and the dielectric strength of accessories shall be adequate.

Compliance shall be checked by the tests made immediately after the humidity test (3.10) in the humidity cabinet or in the room in which the samples were brought to the prescribed temperature, after reassembly of covers which may have been removed.

Devices employing thermoplastic material are subjected to the plug and receptacle mating test.

For the purpose of these tests, the neutral contact and pilot contact are each considered as a pole.

The insulation resistance shall be measured with a dc voltage of approximately 500V applied, the measurement being made 1 minute after application of the voltage.

For receptacles and connectors, the insulation resistance shall be measured consecutively:

a. between all poles connected together and the body. The measurement shall be made with and without a plug in engagement;

b. between each pole in turn and all others, these being connected to the body, with a plug in engagement;

c. between any metal enclosure and metal foil in contact with the inner surface of its insulating lining, if any, a gap of approximately .15 inches being left between the metal foil and the edge of the lining.

For plugs, the insulation resistance shall be measured consecutively:

a. between all poles connected together and the body;*

b. between each pole in turn and all others, these being connected to the body;

c. between any metal enclosure and metal foil in contact with the inner surface of its insulating lining, if any, a gap of approximately .15 inches being left between the metal foil and the edge of the lining.

The insulation resistance shall not be less than 5 megohms.

A voltage of substantially sine-wave form, having a frequency of either 50 or 60 Hz and the value shown in Table 3-2, shall be applied for 1 minute between the parts indicated.

Table 3-2

Rated Voltage of the Accessory (V)	Test Voltage (V)
Up to and including 50	500
Over 50 up to and including 380	2000[-1]
Over 380 up to and including 500	2500
Over 500	3000

[-1] This value is increased to 2500V for metal enclosures lined with insulating material.

Disregard glow discharges which do not result in voltage drop.

Immediately after the preceding test, it shall be possible to engage mating plugs, receptacles, and connectors, any of which are made of thermoplastic materials. It shall be impossible to mate the plug with its intended receptacle or connector in any but the correct polarization. There shall be no unreasonable deformation that results in an unsafe condition.

NEMA Standard 1-11-1983.

3.12 RESISTANCE TO CORROSION

Ferrous parts, including enclosures, shall be adequately protected against rusting.

Compliance shall be checked by the following test. All grease shall be removed from the parts to be tested, by immersion in carbon-tetrachloride for 10 minutes. The parts shall then be immersed for 10 minutes in a 10 percent solution of ammonium chloride in water at a temperature of 20 ± 5°C.

The parts shall then be dried for 10 minutes in a heating cabinet at a temperature of 100 ± 5°C, and their surfaces shall show no signs of rust.

Traces of rust on sharp edges and yellowish film removable by rubbing shall be ignored.

Small helical springs and the like, and inaccessible parts exposed to abrasion, shall be considered protected against rusting by a coating of grease. Such parts shall be tested only when the effectiveness of the grease film is in doubt, and the test is then made without previous removal of the grease.

NEMA Standard 1-11-1983.

*The term "body" includes all accessible metal parts, metal foil in contact with the outer surface of external parts of insulating material, other than the engagement face of connectors and plugs, fixing screws of bases, enclosures and covers, external assembly screws and grounding terminals, if any.

Copyright National Electrical Manufacturers Association
Provided by IHS under license with NEMA
No reproduction or networking permitted without license from IHS
Not for Resale

3.13 CIRCUIT BREAKING CAPACITY

3.13.1 Overload

Except as noted in the following paragraph, a plug, a cable connector, and a receptacle shall perform adequately when subjected to an overload test as described here. There shall be no electrical or mechanical failure of the device nor undue burning, pitting, or welding of the contacts.

The requirement in the previous paragraph does not apply to a plug and receptacle interlocked with an integral switch or circuit breaker where the switch or circuit breaker is opened before the plug can be inserted or withdrawn.

An additional material that is provided with the intent to reduce or confine the arcing in the contact chamber of a plug and receptacle and that decomposes or is otherwise affected by the arcing shall be removed for all of the overload tests.

The device under test is to be operated manually or mechanically by inserting the plug into the receptacle, while it is connected to a suitable load, and then withdrawing the plug. The equipment grounding contact is to be connected to ground through a fuse. The device is to make and break 150 percent of its rated current for 50 cycles of operation at a rate not higher than 10 cycles per minute.

A separate sample of a plug, cable connector, and a receptacle shall be used for each overload test, except, upon request from the manufacturer, one sample may be used for all of the overload tests.

The potential of the test circuit shall be 95-105 percent of the test potential in volts corresponding to the voltage rating of devices as indicated in Table 3-3.

Table 3-3
VOLTAGE FOR TESTS

Voltage Rating of Device[1]	Test Potential in Volts
110-120, ac	120, ac
110-125, dc	125, dc
208, ac	208, ac
220-240, ac	240, ac
220-250, dc	250, dc
265-277, ac	277, ac
440-480, ac	480, ac
550-600, ac	600, ac
550-600, dc	600, dc

[1] If the rating of the device does not fall within any of the indicated voltage ranges, it shall be tested at its rated voltage.

Except as noted in the following two paragraphs, the test on a plug and a receptacle that has multiple voltage and ampere ratings shall be performed at:

a. 150 percent of the rated current that corresponds to the maximum rated voltage,

b. 150 percent of the maximum rated current at the corresponding rated voltage, and

c. 150 percent of the rated current at the corresponding rated voltage that results in maximum power per pole. NEMA Standard 11-16-1989.

A test on alternating-current may be waived if adequate results have been obtained from an equivalent or higher volt-ampere test at a direct-current potential that is equal to or greater than the alternating-current potential rating.

One or two of the foregoing 150 percent tests may be waived if it is obvious that it is fully represented by the other test or tests. All of the overload tests may be waived if it is obvious that they are fully represented by other tests described here.

Authorized Engineering Information 1-11-1983.

Contacts of the plug or the receptacle shall not be adjusted, lubricated, or otherwise conditioned before or during the test.

The device shall be mounted and wired to represent service conditions. If the device is rated at 250 volts or less, exposed metal parts shall be connected through a fuse to (1) ground, (2) the grounded conductor of the test circuit, or (3) a circuit conductor that differs at least 125 volts in potential from one or more of the remaining conductors in the circuit. If the device is rated at more than 250 volts, the exposed metal parts shall be connected similarly to a circuit conductor that differs by at least the rated potential from one or more of the remaining conductors in the circuit.

The fuse in the grounding conductor shall have a 15 ampere rating if the device under test is rated at 30 amperes or less. If the device under test is rated at more than 30 amperes the grounding fuse shall have a rating of 30 amperes. For the line fuse use the next higher commercial fuse rating than the value of the test current in the test circuit. Neither the line fuse or the grounding fuse shall open during the test.

The test shall be conducted on direct-current, except that alternating-current shall be used if the device is rated for alternating-current only. When alternating-current is used for the test, the power factor of the load shall be from 0.75 to 0.80 for an ampere-rated device.

3.13.2 Horsepower Rated

Except as noted in the following paragraph, a plug and receptacle with a horse-power rating shall perform in an overload test making and breaking the locked-rotor current corresponding to the horsepower rating of the device. The test shall be conducted in accordance with 3.13.1, except that the value of the test current corres-

Copyright National Electrical Manufacturers Association
Provided by IHS under license with NEMA
No reproduction or networking permitted without license from IHS
Not for Resale

Table 3-4
STANDARD ELECTROMAGNET LOADS

Test Potential In Volts	Standard Duty		Heavy Duty	
	Normal Current	Current Inrush	Normal Current	Current Inrush
120 ac[a]	3.0	30	6.0	60
240 ac[a]	1.5	15	3.0	30
480 ac[a]	0.75	7.5	1.5	15
600 ac[a]	0.6	6	1.2	12
125 dc	1.1	. . .	2.2	. . .
250 dc	0.55	. . .	1.1	. . .
600 dc	0.2	. . .	0.4	. . .

[a] Power factor 0.35 or less.

NEMA Standard 1-11-1983.
Authorized Engineering Information 1-11-83.

ponding to a horsepower rating shall be as specified in the requirements for snap switches (UL Standard 20) for two horsepower or less and as specified in the requirements for enclosed switches (UL Standard 98) for an alternating-current rating of more than two horsepower. The load for an alternating-current horsepower rating shall have a power factor of 0.40 to 0.50.

Either of the overload tests mentioned in the preceding paragraph may be omitted when it is obvious that it is fully represented by the other test.

3.13.3 Electromagnetic

A plug and a receptacle for controlling a contactor, a relay, or other magnetically-operated device shall perform satisfactorily when subjected to an overload test consisting of 50 operations, making and breaking a circuit of 110 percent of the indicated overload-test potential in Table 3-4. The load shall consist of an electromagnet representative of the load that the device is intended to control. Except as noted in the following paragraph, the load shall be as indicated in Table 3-4. The test shall be conducted as described in this standard.

NEMA Standard 11-16-1989.

A load other than one of those described in Table 3-4 may be used after due consideration of:

1. Need for a device to control an electromagnetic load having other characteristics.
2. The means utilized for matching the rating of the device to that of the load.
3. The completeness of the marking.

Authorized Engineering Information 1-11-1983.

3.14 NO-LOAD ENDURANCE

A plug, a cable connector, and a receptacle provided with an interlock switch or circuit breaker or for disconnect use only (not for current interrupting) shall be subjected to a no-load endurance test in which the plug is completely inserted in the receptacle in the intended manner to permit its operation and then complete withdrawal—either manually or mechanically—the interlock being locked and unlocked after each complete insertion of the plug. The duration of the test shall be the same number of cycles as the total cycles (with and without load) for a device of the same rating tested for endurance under load, as in 3.15, at a rate no greater than ten per minute unless specified otherwise. During this test, there shall be no mechanical or visible damage to any of the parts including the interlocking mechanism.

Equipment tested to this provison shall be "For Disconnect Use Only" or "Not For Current Interrupting" and so marked (3.20) unless also tested to 3.15.

NEMA Standard 1-11-1983.

3.15 ENDURANCE WITH LOAD

Accessories shall withstand, without excessive wear or other harmful effect, the mechanical, electrical and thermal stresses occurring in normal use.

Devices under test are to be operated manually or mechanically at rated voltage and current at a rate no greater than 10 cycles per minute.

The test is to be conducted on direct current, except that alternating current is to be used if the device is rated for alternating current only. When alternating current is used for the test, the power factor of the load is to be from 0.75 to 0.80.

For dual-rated devices, a test on ac may be waived if acceptable results have been obtained from an equivalent or higher volt-ampere test at a dc potential that is equal to or greater than the ac potential rating.

If the test is run mechanically, the rate of operation shall be no greater than 10 cycles per minute, with an average velocity of 30 ± 3 inches per second in each direction.

The total number of operating cycles shall be in accordance with Table 3-5.

Copyright National Electrical Manufacturers Association
Provided by IHS under license with NEMA
No reproduction or networking permitted without license from IHS
Not for Resale

Table 3-5

Device Rating (Amps)	Cycles Under Load at Rated Current and Voltage	No-Load Cycles	Sequence
15 & 20	5000	0	. . .
30 & 60	1000	1000	Alternately
100 & 200	250	250	Alternately
400	125	125	Alternately
800	*	*	

* Values under consideration.

During the test, no sustained arcing shall occur.

After the test, the samples shall show:

—no wear impairment in the further use of the device;

—no deterioration of enclosures or barriers;

—no damage to the entry holes for the plug contacts that might impair proper working;

—no loosening of electrical or mechanical connections.

NEMA Standard 1-11-1983.

3.16 TEMPERATURE RISE

The temperature rise of a receptacle or connector measured at the points described in the following paragraph shall not exceed 30°C (54°F) when the device is carrying its maximum rated current.

The temperature measurement shall be made on the wiring terminals of the equipment if they are accessible for mounting thermocouples. If the equipment has no wiring terminals or they are inaccessible, temperatures shall be measured as close as possible to the face of the equipment on the plug contacts inserted in the receptacle.

If the device is designed for use with conductors having other than 60°C insulation, the device shall be subjected to a special investigation and shall be marked with the temperature limitation of the conductor.

The temperature test shall be made following the overload test on the equipment, and shall continue for 4 hours even if stabilized temperatures are attained in a shorter interval of time. Generation of heat from sources other than contacts shall be minimized as much as possible. For example, each connection to the equipment under test shall be made by means of a 6-inch or shorter length of Type RH or Type T wire which has an ampacity at least equal to that of the equipment. In the case of a connector body, wires of the indicated ampacity shall be used regardless of the size of cord which is intended to be used with the device. The contacts of equipment under test shall be connected together by means of an inserted plug. The terminals of the plug shall be short-circuited by means of the shortest feasible lengths of Type T or Type RH wire as described earlier.

NEMA Standard 1-11-1983.

Table 3-6

Device Rating (Amperes)	Straight Pull (lbs.)	Torque (ft. lbs.)
15	30	.3
20	30	.4
30	75	.5
60	150	1.0
100	150	2.0
200	150	4.0
400	*	4.0
800	*	*

* Value under consideration.

NEMA Standard 1-11-1983.

3.17 CABLE SECURENESS

—Tests shall be performed on each type and size of cable grip. Tests shall be conducted using both the maximum and minimum diameter cable that the cable grip is designed to accommodate.

—Devices shall show no evidence of damage to the termination, or damage to the terminal, or damage to the cord where a force according to Table 3-6 is applied for 1 minute.

—The flexible cord shall be assembled and fastened as intended in service. Screws or nuts are to be tightened according to manufacturer's directions. The cord clamp is to be held firmly. A gradual force is applied 6 inches from the cable grip by the use of a pulley and weights.

—A torque shall also be applied to the cable according to Table 3-6 for 1 minute in the direction most unfavorable to the clamp construction. There shall be no evidence of damage to the termination, terminal, or damage to the cords.

NEMA Standard 1-11-1983.

3.18 MECHANICAL STRENGTH

Electrical equipment shall have adequate mechanical strength.

3.18.1 Plugs and Connectors

Rewireable plugs and connectors shall be fitted with a length of extra hard usage cable corresponding to the rating of the device.

The free end of the cable, which shall be approximately 7.5 feet long, shall be fixed to a wall at a height of 30 inches above the floor, as shown in Figure 3-3.

The sample shall be held so that the cable is horizontal and allowed to fall eight times onto a concrete floor. Rotate the rope through 45° at its fixing each time.

After the test, the samples shall show no significant damage, and no part shall become detached or loosened.

Moisture resistant equipment shall withstand the relevant test in 3.9.

Small chips and dents which do not adversely affect the protection against electric shock or moisture shall be disregarded.

Copyright National Electrical Manufacturers Association
Provided by IHS under license with NEMA
No reproduction or networking permitted without license from IHS

Not for Resale

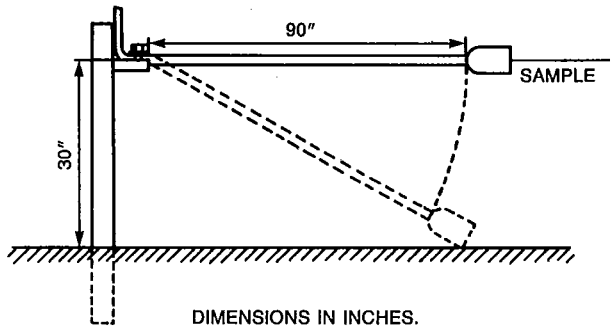

Figure 3-3. ARRANGEMENT FOR MECHANICAL STRENGTH TEST FOR PLUGS AND CONNECTORS

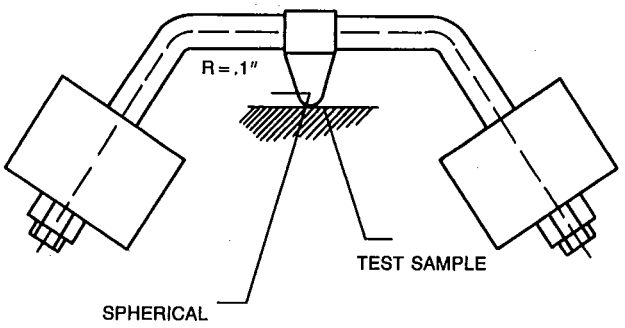

Figure 3-4. BALL-PRESSURE APPARATUS

3.18.2 Gland Strength

Fit threaded glands with a cylindrical metal rod having a diameter, in inches, equal to the nearest .01 inches below the internal diameter of the packing. Tighten the gland nut by means of a suitable wrench, with the force shown in Table 3-7 for one minute, at a point 1 foot from the axis of the gland.

After the test, the glands and the enclosures of the samples shall show no significant damage.

NEMA Standard 1-11-1983.

3.19 RESISTANCE TO HEAT, FIRE AND TRACKING

3.19.1 Ball Pressure Test

Electrical equipment shall be sufficiently resistant to heat.

Compliance is checked by the following two tests.

The samples shall be kept for 1 hour in a heating cabinet at a temperature of 100 ±5°C.

They shall not undergo any change impairing their further use, and sealing compound shall not flow to such an extent that live parts are exposed, and marking shall still be easily legible.

Slight displacement of the sealing compound shall be disregarded.

Parts of insulating material shall be subjected to a ball-pressure test by means of the apparatus shown in Figure 3-4.

The surface of the part to be tested shall be placed in the horizontal position and a steel ball of 0.2 inches diameter shall be pressed against this surface by a force of 4.5 lbs.

The test shall be made in a heating cabinet at a temperature of:

- 125 ±5°C for parts supporting live parts of rewireable accessories;
- 80 ±3°C for other parts.

After 1 hour, the ball shall be removed and the diameter of the impression measured. For materials which show no appreciable elastic deformation, the diameter shall not exceed 0.08 inch.

The test need not be made on parts of ceramic material.

3.19.2 Comparative Tracking Index

For materials other than ceramic, conformance shall be checked by the following test.

A flat surface of the part to be tested, if possible at least 0.6 inches × 0.6 inches, shall be placed in the horizontal position.

Two electrodes of platinum or other sufficiently non-corrodible material, with the dimensions shown in Figure 3-5, shall be placed on the surface of the sample in the manner shown in this figure, so that the rounded

Table 3-7

Diameter of test rod (inches)	Force (lbs.)	
	Metal glands	Glands of molded Material
up to and including .79	5.5	3.5
over .79 up to and including 1.18	7.5	5.5
over 1.18	9.5	7.5

Copyright National Electrical Manufacturers Association
Provided by IHS under license with NEMA
No reproduction or networking permitted without license from IHS
Not for Resale

edges are in contact with the sample over their whole length.

The force exerted on the surface by each electrode shall be approximately .25 lbs.

The electrodes shall be connected to a 60 Hz supply source having a voltage of 175 V, of substantially sine-wave form. The total impedance of the circuit when the electrodes are short-circuited shall be adjusted by means of a variable resistor, so that the current is 1.0 ±0.1A and cos Ø is 0.9 to 1. An overcurrent relay, with a tripping time of at least 0.5 seconds, shall be included in the circuit.

The surface of the sample shall be wetted by allowing drops of a solution of ammonium chloride in distilled water to fall midway between the electrodes.

The solution shall have a volume resistivity of 400 ohm cm at 25°C, corresponding to a concentration of about 0.1 percent. The drops have a volume of 20(+5) (−0)mm³ and fall from height of 1.2 to 1.6 inches.

The time interval between one drop and the next shall be 30 ±5 seconds.

No flashover or breakdown between electrodes shall occur before a total of 50 drops has fallen.

Care shall be exercised to assure that the electrodes are clean, correctly shaped and correctly positioned before each test is started.

In case of doubt, the test shall be repeated on a new set of samples.

NEMA Standard 1-11-1983.

3.20 MARKINGS

Plugs, receptacles, and connectors shall have a plain, legible marking which will be readily visible after the equipment has been installed as intended and shall include (1) the manufacturer's name, trademark, or other identifying symbol, (2) the electrical rating if the equipment is required to be rated, and (3) if practicable, the catalog number or an equivalent designation.

A device intended only for disconnecting use shall be marked "For Disconnect Use Only," or "Not For Current Interrupting," or with an equivalent statement.

A device intended for use only on alternating-current circuits shall be so marked.

If an electrical rating is marked on a plug, it shall correspond to the rating of the receptacle with which it is intended to be used.

NEMA Standard 1-11-1983.

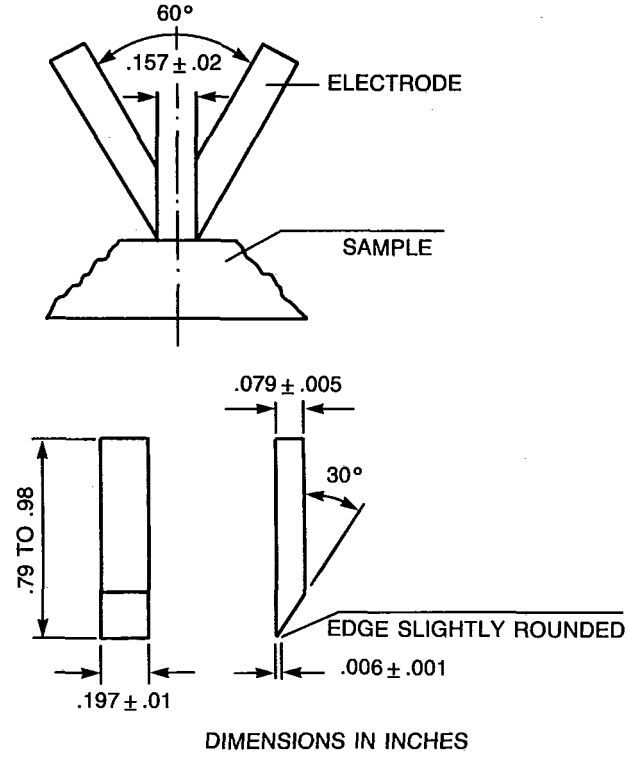

Figure 3-5. ARRANGEMENT AND DIMENSIONS OF THE ELECTRODES FOR THE TRACKING TEST

Copyright National Electrical Manufacturers Association
Provided by IHS under license with NEMA
No reproduction or networking permitted without license from IHS
Not for Resale

NEMA STANDARDIZATION

The purpose of NEMA Standards, their classification and status, are set forth in certain clauses of the NEMA *Standardization Policies and Procedures* manual and are referenced below.

Purpose of Standards

National Electrical Manufacturers Association standards are adopted in the public interest and are designed to eliminate misunderstandings between the manufacturer and the purchaser and to assist purchasers in selecting and obtaining the proper product for their particular needs. Existence of a National Electrical Manufacturers Association standard does not in any respect preclude any member or nonmember from manufacturing or selling products not conforming to the standard. *(Standardization Policies and Procedures, p. 1)*

Definition of a Standard

A standard of the National Electrical Manufacturers Association defines a product, process, or procedure with reference to one or more of the following: nomenclature, composition, construction, dimensions, tolerances, safety, operating characteristics, performance, rating, testing, and the service for which they are designed.

(Standardization Policies and Procedures, p. 2)

Dimensions

Where dimensions are given for interchangeability purposes, alternate dimensions satisfying the other provisions of the Standards Publication may be capable of otherwise equivalent performance.

(Standardization Policies and Procedures, p.8)

Categories of Standards

National Electrical Manufacturers Association Standards are of two classes:

1. NEMA Standard, which relates to a product, process, or procedure commercially standardized and subject to repetitive manufacture, which standard has been approved by at least 90 percent of the members of the Subdivision eligible to vote thereon;
2. Suggested Standard for Future Design, which may not have been regularly applied to a commercial product, but which suggests a sound engineering approach to future development, which standard has been approved by at least two-thirds of the members of the Subdivision eligible to vote thereon.

(Standardization Policies and Procedures, pp. 7 & 16)

Authorized Engineering Information

Authorized Engineering Information consists of explanatory data and other engineering information of an informative character not falling within the classification of NEMA Standard or Suggested Standard for Future Design, which standard has been approved by at least two-thirds of the members of the Subdivision eligible to vote on the standard.

(Standardization Policies and Procedures, pp. 7 & 16)

Official Standards Proposal

An Official Standards Proposal is an official draft of a proposed standard which is formally recommended to an outside organization(s) for consideration, comment, and/or approval, and which has been approved by at least 90 percent of the members of the Subdivision eligible to vote thereon.

(Standardization Policies and Procedures, pp. 7 & 16)

Identification of Status

Standards in NEMA Standards Publications are identified in the foreword or following each standard as "NEMA Standard" or "Suggested Standard for Future Design." These indicate the status of the standard. These words are followed by a date which indicates when the standard was adopted in its present form by the Association.

The material identified as "Authorized Engineering Information" and "Official Standards Proposal" is designated similarly.

Copyright National Electrical Manufacturers Association
Provided by IHS under license with NEMA
No reproduction or networking permitted without license from IHS
Not for Resale

PIN AND SLEEVE PLUG, RECEPTACLE AND CONNECTOR SECTION OF THE NATIONAL ELECTRICAL MANUFACTURERS ASSOCIATION

MEMBER COMPANIES

Amerace Corporation
Russellstoll Division
Livingston, NJ 07039

Appleton Electric Company
Chicago, IL 60657

Crouse-Hinds Electrical Construction Materials
Division of Cooper Industries, Inc.
Syracuse, NY 13221

Daniel Woodhead Company
Subsidiary of Woodhead Industries, Inc.
Northbrook, IL 60062

Electrical Distribution Products Division
Cooper Industries, Inc.
Charlottesville, VA 22906

Hubbell Incorporated
Wiring Device Division
Bridgeport, CT 06605

Joy Molded Rubber Products
Division of Cooper Industries, Inc.
La Grange, NC 28551

Killark Electric Manufacturing Company
Subsidiary of Hubbell Incorporated
St. Louis, MO 63115

Meltric Corporation
Cudahy, WI 53110

R. Stahl, Inc.
Woburn, MA 01801

Thomas & Betts Corporation
Bridgewater, NJ 08807-0993

Copyright National Electrical Manufacturers Association
Provided by IHS under license with NEMA
No reproduction or networking permitted without license from IHS
Not for Resale