PP 1-86 6470247 0003507 6
A-11-27
A-14-03

STANDARDS PUBLICATION/NO PP 1

nema

Procedure for Evaluating Ground Fault Circuit Interrupters for Response to Conducted Radio Frequency Energy

NEMA

NATIONAL ELECTRICAL MANUFACTURERS ASSOCIATION ■ 2101 L STREET N.W., WASHINGTON, D.C. 20037

Copyright National Electrical Manufacturers Association
Provided by IHS under license with NEMA
No reproduction or networking permitted without license from IHS
Not for Resale

NEMA PP 1-1986

PP 1

PROCEDURE FOR EVALUATING GROUND FAULT CIRCUIT INTERRUPTERS FOR RESPONSE TO CONDUCTED RADIO FREQUENCY ENERGY

Published by

National Electrical Manufacturers Association
2101 L Street, NW
Washington, DC 20037
(202) 457-8400

© 1986 by National Electrical Manufacturers Association

Copyright National Electrical Manufacturers Association
Provided by IHS under license with NEMA
No reproduction or networking permitted without license from IHS
Not for Resale

TABLE OF CONTENTS

FOREWORD i
SCOPE ii

Section 1 GENERAL
Introduction 1
Description of Test Method 1

Section 2 TEST EQUIPMENT SPECIFICATIONS
RF Signal Generator 1
High Frequency Voltmeter 1
RF Couplings Fixture 1
Isolation Transformer 1

Section 3 TEST METHOD
Preparation 6
Test Sample 6
Test Configuration 6
Test Parameters 6
Frequencies 6
RF Amplitude 6
Isolation Transformer Secondary Voltage 6
Test Procedure 6
Interpretation of Test Results 7
Paragraph 3.3, Step 9 7
Paragraph 3.3, Step 11 7

LIST OF ILLUSTRATIONS
Figure 1-1 Block Diagram 2
Figure 1-2 Schematic Diagram 3
Figure 2-1 Figure Coupling Fixture 4
Table 2-1 Bill of Material 5
Table 3-1 Test Frequencies 6

Copyright National Electrical Manufacturers Association
Provided by IHS under license with NEMA
No reproduction or networking permitted without license from IHS
Not for Resale

Foreword

(Unless otherwise noted, this Standards Publication has been approved as NEMA Standard 5-19-1986.)

In recent years, a need has been expressed for a documentable, repeatable, and meaningful electrical environmental noise test for GFCI's. The procedure covered in this document was prepared for the purpose of responding to this expressed need, by defining tests that will provide an indication of the device's ability to function in a "real-world" environment, without unwanted tripping due to electromagnetic interference.

It was recognized from the outset that it would not be possible to represent all forms of potential electromagnetic interference with a single test. It was concluded that the initial efforts should be directed toward a test covering the Radio Frequency (RF) range, where it is believed a great many of the interference sources might originate. Also, the experience of many manufacturers indicated that devices designed to withstand tests in this frequency range would function well in actual practice.

A number of proposals presenting different test methodologies were evaluated. The proposal which was selected as the basis for development of this standard evolved from MIL STD 461, which defines requirements for electromagnetic compatibility, and MIL STD 462 covering related test methods. Test CSO2 of MIL STD 462 specifies a procedure for evaluating equipment for susceptibility to conducted RF energy over a frequency range of 10 to 400MHz, and was believed to be the most appropriate for this application. The upper frequency limit for this NEMA test standard was raised to 450MHz to cover as much as possible of the frequncy range where many hand held radios and other such devices are known to operate. Above this frequency, however, the test methodology and equipment complexity increases drastically, and it was concluded that a separate standard, or standards, would be necessary for any such tests.

The selection of a conducted RF susceptibility test rather than a radiated susceptibility test was made since the RF energy absorbed by the GFCI directly from the passing wave would be insignificant when compared to the energy absorbed by the line and load conductors, and conducted to the GFCI.

Evaluation tests of the effect of other electromagnetic signals, such as transient impulses, variations of frequency modulation, and audio frequency tests are encouraged. Proposals for specific tests will be welcomed, and considered for adoption by NEMA. It is anticipated that NEMA will continue to pursue development of such standards where it is evident that a standardized and routine test procedure is needed by the industry.

It is noted that for some applications, where it is known that sources of electromagnetic interference are not present, or are minimal in nature, devices not designed to meet this test standard may be suitable for the particular application.

This standard publication was prepared by the Ground Fault Personnel Protection Section of NEMA. In its preparation, the input of users and other interested parties has been sought and evaluated. Inquiries, comments and proposed or recommended revisions are welcomed and should be submitted to:

Manager, Engineering Department
National Electrical Manufacturers Association
2101 L Street, NW, Suite 300
Washington, DC 20037

Copyright National Electrical Manufacturers Association
Provided by IHS under license with NEMA
No reproduction or networking permitted without license from IHS
Not for Resale

Scope

This standard defines a test method for evaluating the performance of Ground Fault Circuit Interrupters when exposed to conducted radio-frequency (RF) energy. The products to which this standard applies are Ground Fault Circuit Interrupters (GFCI's) incorporated in receptacle outlets, circuit breakers or other devices and meeting the definition of Ground Fault Circuit Interrupter as contained in NFPA 70-1984, *National Electrical Code.**

*Copies may be ordered from:
National Fire Protection Association
Batterymarch Park
Quincy, MA 02269

Copyright National Electrical Manufacturers Association
Provided by IHS under license with NEMA
No reproduction or networking permitted without license from IHS
Not for Resale

Section 1

GENERAL

1.1 INTRODUCTION

This standard establishes a test method and limits for use in evaluating Ground Fault Circuit Interrupters (GFCI's) for response to conducted radio-frequency (RF) energy. The National Electrical Code defines the Ground Fault Circuit Interrupter as, "A device intended for the protection of personnel that functions to de-energize a circuit or portion thereof within an established period of time when a current to ground exceeds some predetermined value that is less than that required to operate the overcurrent protective device of the supply circuit."

In service, GFCI's are exposed to RF signals from a wide variety of sources. Citizen-band and amateur-radio transmitters as well as public-service radio transmitters are often located in close proximity to GFCI's. Also, devices not intended to radiate, such as carrier current transmitters, may impinge RF signals on the branch circuit on which the GFCI is connected. Adherence to the standard established in this publication will minimize the likelihood of a GFCI tripping or becoming significantly desensitized by such RF energy.

Authorized Engineering Information 5-19-1986.

1.2 DESCRIPTION OF TEST METHOD

A 0.5V rms RF signal is injected into the normal supply connections of the GFCI under test by means of the RF Coupling Fixture, and the signal frequency varied from 10 to 450MHz. GFCI's must resist tripping from the effects of the RF signal at all frequencies, and function properly when the test button is operated.

A block diagram of the test arrangement is presented in Figure 1-1, and the schematic in Figure 1-2.

Section 2

TEST EQUIPMENT REQUIREMENTS

2.1 RF SIGNAL GENERATOR

Frequency Range: 10 to 450MHz minimum.
Accuracy: ± 3% after warm-up
Modulation: Continuous Wave (CW)
Adjustable Output Attenuator.
Spectral Purity:

- Harmonic distortion (at output power ≤ + 3 dBm): < -20 dBc.
- Subharmonics and non-harmonic spurous (excluding line related): < -100dBc.
- Residual AM (average rms): -55 dBc in a 50 Hz to 15 kHz post-detection noise bandwidth.
- Residual FM on CW (averaged rms deviation): < 0.3 ppm in a 0.3 to 3 kHz post-detection noise bandwidth: < 0.5 ppm in a 50 Hz to 15 kHz post-detection noise bandwidth.

Output voltage: Shall be capable of delivering 0.5V rms minimum across a 51 ohm resistive load.

2.2 HIGH FREQUENCY VOLTMETER

Frequency Range: 10 to 450 MHz minimum.
Voltage Range: Shall have a range suitable for measuring a value of 0.5V rms to an accuracy of ± 3%.
Input Impedance: > 10M ohm shunted by 1.5pF or less.

2.3 RF COUPLING FIXTURE

The RF coupling fixture shall be constructed in accordance with Figure 2-1. Modifications to the Coupling Fixture which may be required by the product configuration, shall conform to the provisions of 3.11. The bill-of-material for the fixture appears in Table 2-1.

2.4 ISOLATION TRANSFORMER

Secondary Voltage: Rated voltage for the GFCI under test.
Frequency: 50/60 Hz
VA: 225 minimum
Triad-Utrad N55M or equivalent

Copyright National Electrical Manufacturers Association
Provided by IHS under license with NEMA
No reproduction or networking permitted without license from IHS
Not for Resale

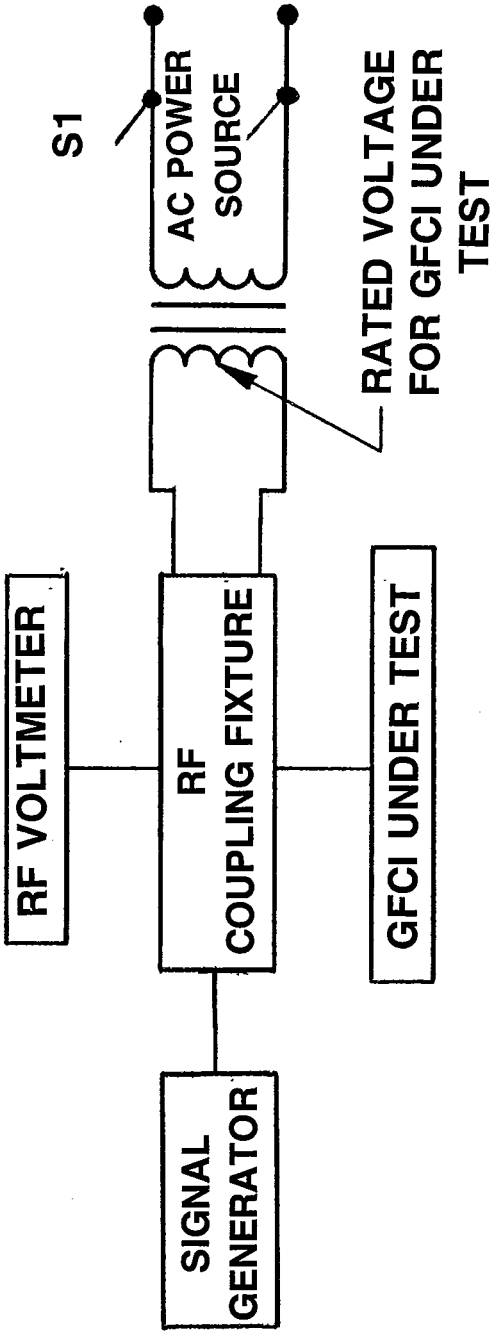

Figure 1-1
BLOCK DIAGRAM

Copyright National Electrical Manufacturers Association
Provided by IHS under license with NEMA
No reproduction or networking permitted without license from IHS
Not for Resale

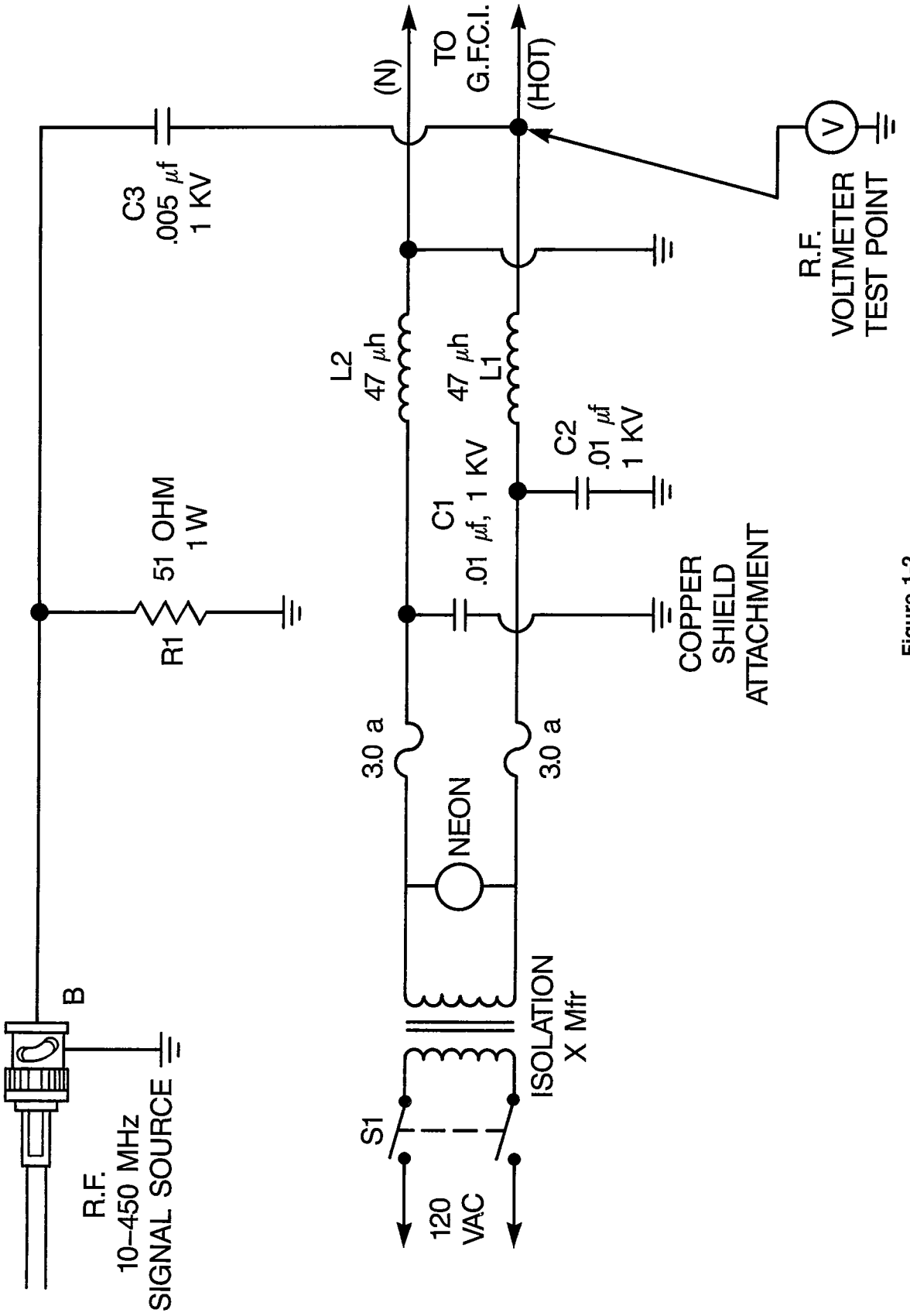

Figure 1-2
SCHEMATIC DIAGRAM

Copyright National Electrical Manufacturers Association
Provided by IHS under license with NEMA
No reproduction or networking permitted without license from IHS

Not for Resale

Copyright National Electrical Manufacturers Association
Provided by IHS under license with NEMA
No reproduction or networking permitted without license from IHS
Not for Resale

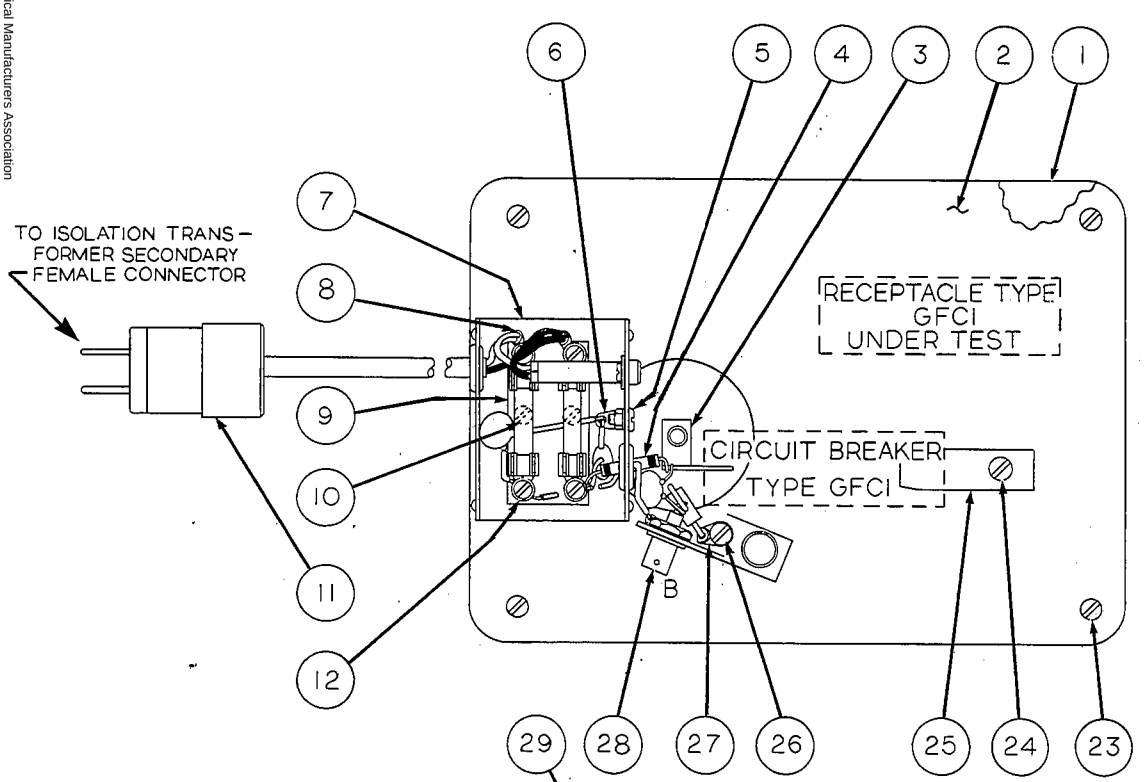

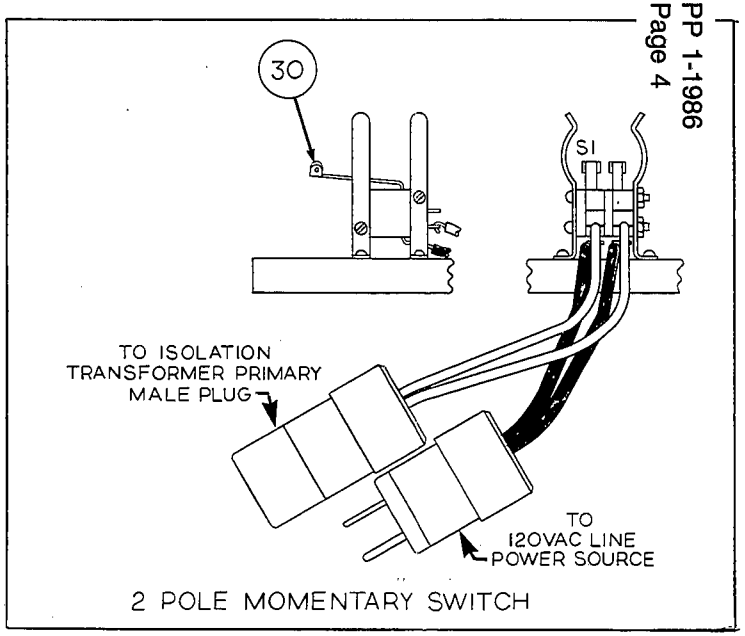

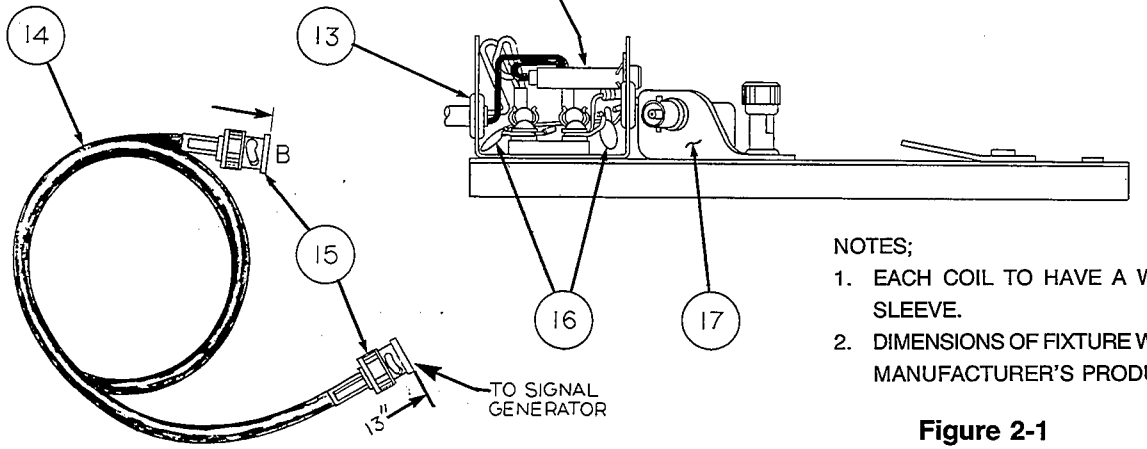

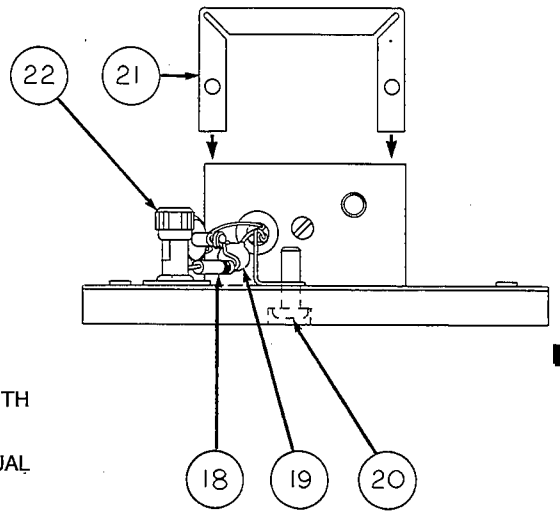

NOTES;

1. EACH COIL TO HAVE A WIRE LEAD 1 1/4" LONG WITH SLEEVE.
2. DIMENSIONS OF FIXTURE WILL BE SUBJECT TO INDIVIDUAL MANUFACTURER'S PRODUCT CONFIGURATION.

Figure 2-1
RF COUPLING FIXTURE

PP 1-86
6470247 0003515 5

Table 2-1
Bill of Material

ITEM	MATERIAL OR PART NO.	REF. DESCRIPTION	QTY.	DESCRIPTION
1	Lexan 8.75 x 6.12 x .50			Base
2	Copper, 8.75 x 6.12 x .031			Base Plate
3	Copper, .075 THK			Stab
4	.170 DIA. x .400 (L1 & L2)		2	Coil 47uh
5	#6-20 x .37 LG.			Screw & Nut
6	Copper			Terminal Solder Lug
7	2.62 x 2.00 x 1.60 AL.			Box
8	Quick disconnect terminal		2	Terminal Lug
9	3 AMP/125 V S.B.		2	Fuse
10	#10-32		2	Mounting Screw
11	120V Polarized			Plug & Cord (2 Wire)
12	Fuse Block			Fuse Block (2 Fuse)
13	Rubber		2	Grommet
14	RG-58 C/U Coaxial Cable x 13''LG			Wire
15	BNC Connector, Male		2	Coax Connector (Male)
16	.01uF/1KV Ceramic Disc	C1, C2	2	Capacitor
17	Aluminum			Bracket
18	51 Ohm 1 Watt Carbon Composition	R1		Resistor
19	.005uF/1KV	C3		Capacitor
20	.25-20 x .75 LG.			Screw Brass
21	2.75 x 2.15 x 1.65			Cover, Box
22	Fast Clamp			Terminal
23	#8 x. 37 LG.			Screw
24	#8 x. 50 LG.		4	Screw
25	1.78 x .540 x .070 AL.			Hold Down for Breaker Type GFCI
26	#10-32			Screw
27	#8			Solder Lug
28	BNC Connector, Female			Coax connector (Female)
29	125V. 1/3W Neon			Light & Clip
30	2 Pole 125V Normally Open	S1		Momentary Switch

Copyright National Electrical Manufacturers Association
Provided by IHS under license with NEMA
No reproduction or networking permitted without license from IHS
Not for Resale

Section 3

TEST METHOD

3.1 PREPARATION

3.1.1 Test Sample

Prior to testing, it shall be verified that the GFCI is functionally operable and conforms to the requirements of Underwriters Laboratories document UL 943-1977, Standard for Ground Fault Circuit Interrupters*. The GFCI shall be in its original new condition, with no alteration. If the GFCI contains integral wire connections, they shall not be shortened, lengthened, or altered in any way when connected to the RF Coupling Fixture. For GFCI's employing field wiring terminals, the terminals shall be connected to the fixture with 14 awg solid wire leads 6 ± 1/2 inches long.

3.1.2 Test Configuration

The Test equipment shall be connected in accordance with Figures 1-1 and 1-2. Prior to initiation of the test, the Signal Generator and Amplifier shall be allowed to warm-up and stabilize in accordance with the manufacturer's instructions.

3.2 TEST PARAMETERS

3.2.1 Frequencies

The test frequencies are given in Table 3-1. The signal generator shall be adjusted to within ± 5% of each of the frequencies shown. The signal generator shall be unmodulated, producing a continuous RF wave of constant frequency. The GFCI under test shall be exposed sequentially to each frequency given in Table 3-1.

3.2.2 RF Amplitude

The amplitude of the RF signal shall be adjusted to 0.5v rms ± 5% as measured at the RF voltmeter test point shown in Figure 1-2. This measurement must be performed with momentary switch S1 open so that ac power is not present at the test point. Failure to observe this precaution will result in damage to the voltmeter.

3.2.3 Isolation Transformer Secondary Voltage

The secondary voltage of the isolation transformer shall be the rated voltage for the GFCI under test.

Table 3-1
TEST FREQUENCIES

Test #	Frequency (MHz) ± 5%
1	10
2	12
3	14
4	18
5	20
6	25
7	30
8	35
9	45
10	50
11	60
12	75
13	90
14	100
15	120
16	150
17	175
18	200
19	250
20	300
21	350
22	450

3.3 TEST PROCEDURE

The following procedure shall be used to evaluate the GFCI's response to RF energy:

1. Prepare the test sample as indicated in 3.1.1.
2. Open momentary switch S1 to remove as power from the RF Coupling Fixture.
3. Connect the GFCI under test to the RF Coupling Fixture by connecting the line terminal of the GFCI to the terminal labeled HOT (refer to the schematic diagram,Figure 1-2), and the neutral terminal to the terminal on the fixture labeled (N).
4. Set the signal generator to test frequency #1 (10 ± 5%MHz).
5. Connect the voltmeter to the voltmeter test point. BE SURE S1 IS OPEN. The device under test shall be in the "off" or "trip" position while the voltage is being preset.*
6. Adjust the ouptut of the amplifier until the voltmeter reads .5 Vrms ± 5%.

**NOTE:* The intent is to disconnect any electronic devices or components of the test sample, to prevent a loading effect when setting the RF voltage. In some cases to achieve this the device under test must be physically removed from test fixture.(Authorized Engineering Information 5-19-1986.)

*Copies may be purchased from:
Underwriters Laboratories, Inc.
333 Pfingston Road
Northbrook, IL 60062

Copyright National Electrical Manufacturers Association
Provided by IHS under license with NEMA
No reproduction or networking permitted without license from IHS
Not for Resale

7. Disconnect the voltmeter from the voltmeter test point.
8. Turn on device under test.
9. Close S1 to apply rated voltage to the GFCI under test.
10. Observe the GFCI for 30 seconds. See 3.4.1 for interpretation of results.
11. Depress the test switch to energize the supervisory circuit of the GFCI under test. See 3.4.2 for interpretation of results.
12. Open S1.
13. Set the signal generator to the next test frequency given in Table 3-1.
14. Repeat steps 5 through 12 until the GFCI has been evaluated at each of the 22 frequencies given in Table 3-1.
15. Upon completion of the test and prior to removal of the sample from the fixture, verify that S1 is open.

3.4 INTERPRETATION OF TEST RESULTS

3.4.1 Paragraph 3.3, Step 9

This step imposes a 0.5Vrms RF voltage on the GFCI at each of the specified frequencies from 10 to 450MHz. During this period, the GFCI must not trip.

3.4.2 Paragraph 3.3, Step 11

The test conditions are the same as step 9 except that the Test Switch on the GFCI is operated. The GFCI must trip. This test assures that the GFCI is not significantly desensitized by RF sources. If the GFCI does not trip during this test, it constitutes non-conformance to this standard.

Copyright National Electrical Manufacturers Association
Provided by IHS under license with NEMA
No reproduction or networking permitted without license from IHS
Not for Resale

September 1984

NEMA STANDARDIZATION

The purpose of NEMA Standards, their classification and status are set forth in certain clauses of the NEMA Bylaws, which are quoted below:

Purpose of Standards

National Electrical Manufacturers Association Standards are adopted in the public interest and are designed to eliminate misunderstandings between the manufacturer and the purchaser and to assist the purchaser in selecting and obtaining the proper product for its particular need. Existence of a National Electrical Manufacturers Association Standard does not in any respect preclude any member or nonmember from manufacturing or selling products not conforming to the standard.

(Bylaw—Art. V, Sec. 1)

Definition of a Standard

A standard of the National Electrical Manufacturers Association defines a product, process or procedure with reference to one or more of the following: nomenclature, composition, construction, dimensions, tolerances, safety, operating characteristics, performance, rating, testing, and the service for which they are designed.

(Bylaw—Art. V, Sec. 2, Subsection A)

Dimensions

Where dimensions are given for interchangeability purposes, alternate dimensions satisfying the other provisions of the standards publication may be capable of otherwise equivalent performance.

(NEMA Policy Memorandum 84-2, dated June 7, 1984)

Classes of Standards

National Electrical Manufacturers Association Standards are of two classes:

1. NEMA Standard, which relates to a product commercially standardized and subject to repetitive manufacture, which standard has been approved by at least 90 percent of the members of the Subdivision eligible to vote thereon;
2. Suggested Standard for Future Design, which may not have been regularly applied to a commercial product, but which suggests a sound engineering approach to future development, which standard has been approved by at least two-thirds of the members of the Subdivision eligible to vote thereon.

(Bylaw—Art. V, Sec. 2, Subsection B)

Authorized Engineering Information

Authorized Engineering Information consists of explanatory data and other engineering information of an informative character not falling within the classification of NEMA Standard or Suggested Standard for Future Design.

(Bylaw—Art. V, Sec. 6, Ist Sentence)

Official Standards Proposal

An Official Standards Proposal is an official draft of a proposed standard which is formally recommended to an outside organization(s) for consideration, comment and/or approval.

(Bylaw—Art. V, Sec. 4, Subsection A)

Identification of Status

Standards in NEMA Standards Publications are identified in the foreword or following each standard as "NEMA Standard" or "Suggested Standard for Future Design." These indicate the status of the standard. These words are followed by a date which indicates when the standard was adopted in its present form by the Association.

The material identified as "Authorized Engineering Information" and "Official Standards Proposal" is designated similarly.

Copyright National Electrical Manufacturers Association
Provided by IHS under license with NEMA
No reproduction or networking permitted without license from IHS
Not for Resale

GROUND FAULT PERSONNEL PROTECTION SECTION

MEMBER COMPANIES

Challenger Electrical Equipment Corporation
Raleigh, NC 27607

Electrical Distribution Products Division
Cooper Industries, Inc.
Charlottesville, VA 22906

Eaton Corporation
Cutler-Hammer Products
Milwaukee, WI 53216

Eagle Electric Manufacturing Company, Inc.
Long Island City, NY 11101

General Electric Company
Plainsville, CT 06062

Harvey Hubbell, Inc.
Orange, CT 06477

Leviton Manufacturing Company, Inc.
Little Neck, NY 11362

Pass & Seymour, Inc.
Syracuse, NY 13221

Siemens Energy & Automation, Inc.
I-T-E Circuit Protection Division
Tucker, GA 30084

Slater Electric, Inc.
Glen Cove, Long Island, NY 11542

Square D Company
Palatine, IL 60067

Technology Research Corporation
Clearwater, FL 33520

Bryant Electric
Westinghouse Electric Corporation
Bridgeport, CT 06605

Woodhead Industries, Inc.
Northbrook, IL 60062

Copyright National Electrical Manufacturers Association
Provided by IHS under license with NEMA
No reproduction or networking permitted without license from IHS
Not for Resale