9009279 0004066 360

STANDARDS PUBLICATION/NO. PH 44-1981

nema

Plastic Tree Guards

NEMA

NATIONAL ELECTRICAL MANUFACTURERS ASSOCIATION ■ 2101 L STREET, N.W., WASHINGTON, D.C. 20037

Copyright National Electrical Manufacturers Association
Provided by IHS under license with NEMA
No reproduction or networking permitted without license from IHS

Not for Resale

9009279 0004067 2T7

TABLE OF CONTENTS

	Page
SCOPE	i
PLASTIC TREE GUARDS	
1.1 General	1
1.2 Material	1
1.3 Applications	1
1.4 Dimensions	1
1.5 Performance	1
1.6 Finish	1
1.7 Marking	1
DATA SHEET 1	
Typical Plastic Tree Guard Applications	2
DATA SHEET 2	
Tree Guard (Type 1)	3
DATA SHEET 3	
Tree Guard (Type 2)	4
DATA SHEET 4	
Tree Guard (Type 3)	5
DATA SHEET 5	
Tree Guard (Type 4)	6
DATA SHEET 6	
Tree Guard (Type 5)	7
DATA SHEET 7	
Formulae to Determine Diameters of Circumscribed Circles of Round, Multi-Conductor Bare and Covered Cables of Equal Diameter	8

© 1981 by National Electrical Manufacturers Association

Copyright National Electrical Manufacturers Association
Provided by IHS under license with NEMA
No reproduction or networking permitted without license from IHS
Not for Resale

Scope

These standards cover plastic tree guards used to protect bare conductors, covered line wires, and multiplex cables against abrasion damage in overhead line construction.

Copyright National Electrical Manufacturers Association
Provided by IHS under license with NEMA
No reproduction or networking permitted without license from IHS
Not for Resale

9009279 0004069 07T

PLASTIC TREE GUARDS

1.1 GENERAL

Plastic tree guards conforming to these standards shall in all respects meet the basic dimensional and performance requirements hereinafter stated. The test, specifications or reference standards, and associated data sheets supplement each other and shall be considered as part of these standards.

NEMA Standard 1-29-1981.

1.2 MATERIAL

The plastic materials used in the manufacture of tree guards shall be nonconductive and of a grade and quality suitable to meet the performance requirements of these standards.

NEMA Standard 1-29-1981.

1.3 APPLICATIONS

These standards shall cover typical applications as shown on Data Sheet 1.

NEMA Standard 1-29-1981.

1.4 DIMENSIONS

1.4.1 Dimensions and tolerances of plastic tree guards shall be in accordance with Data Sheets 2, 3, 4, 5 and 6.

NEMA Standard 1-29-1981.

1.4.2 Formulae included in Data Sheet 7 may be used to determine diameters of circumscribed circles of typical cable messenger configurations.

Authorized Engineering Information 1-29-1981.

1.5 PERFORMANCE

The plastic material used in the manufacture of tree guards shall be a type recognized as possessing abrasion resistant qualities. The material shall provide abrasion protection for the cable from tree limb contact or other obstructions.

NEMA Standard 1-29-1981.

1.6 FINISH

Plastic tree guards shall be reasonably smooth and free of burrs and sharp edges on all surfaces exposed to personnel handling.

NEMA Standard 1-29-1981.

1.7 MARKING

Plastic tree guards shall be marked with manufacturer's identification.

NEMA Standard 1-29-1981.

Copyright National Electrical Manufacturers Association
Provided by IHS under license with NEMA
No reproduction or networking permitted without license from IHS
Not for Resale

9009279 0004070 891

Data Sheet 1
TYPICAL PLASTIC TREE GUARD APPLICATIONS

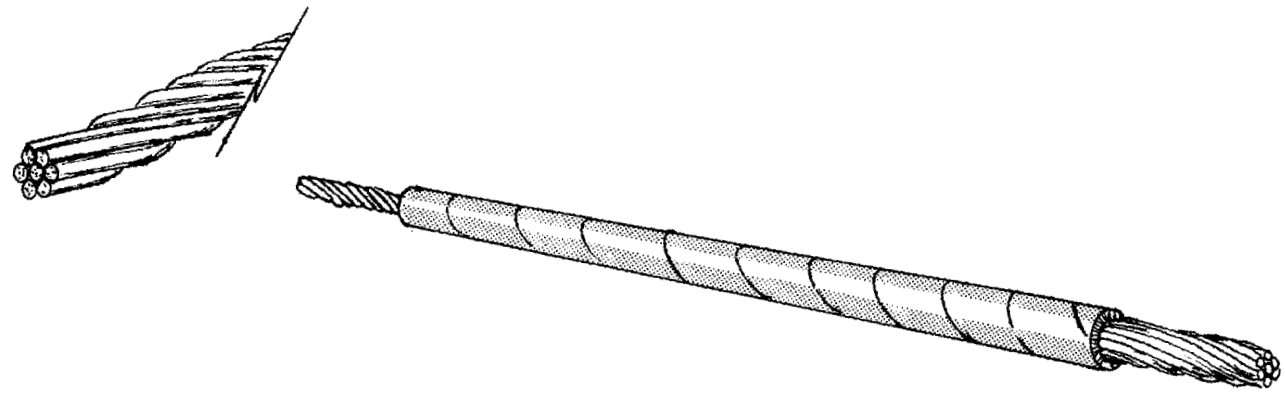

Figure 1
TREE GUARD INSTALLED ON BARE CONDUCTOR

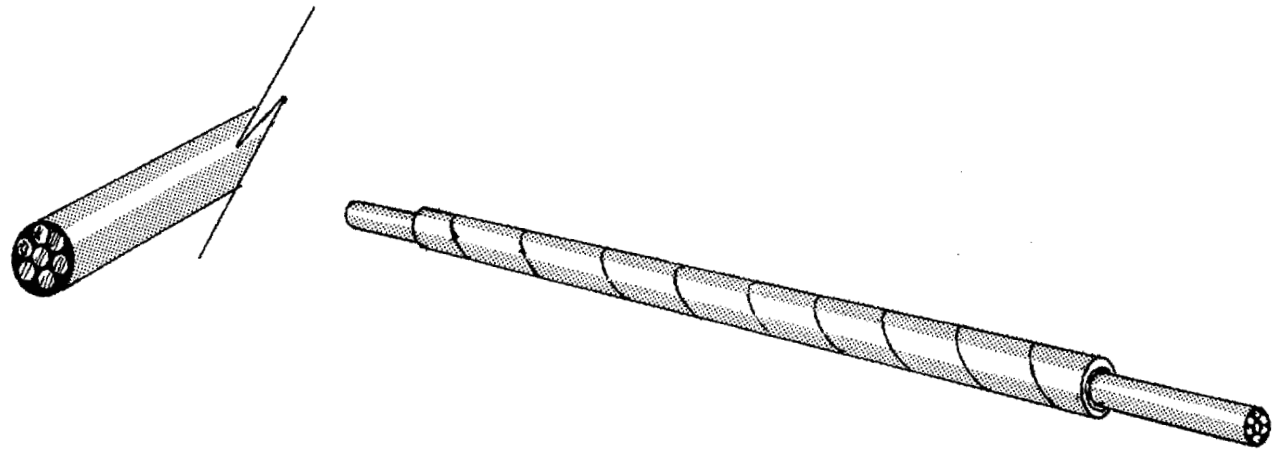

Figure 2
TREE GUARD INSTALLED ON FABRIC OR PLASTIC COVERED LINE WIRE CONDUCTOR

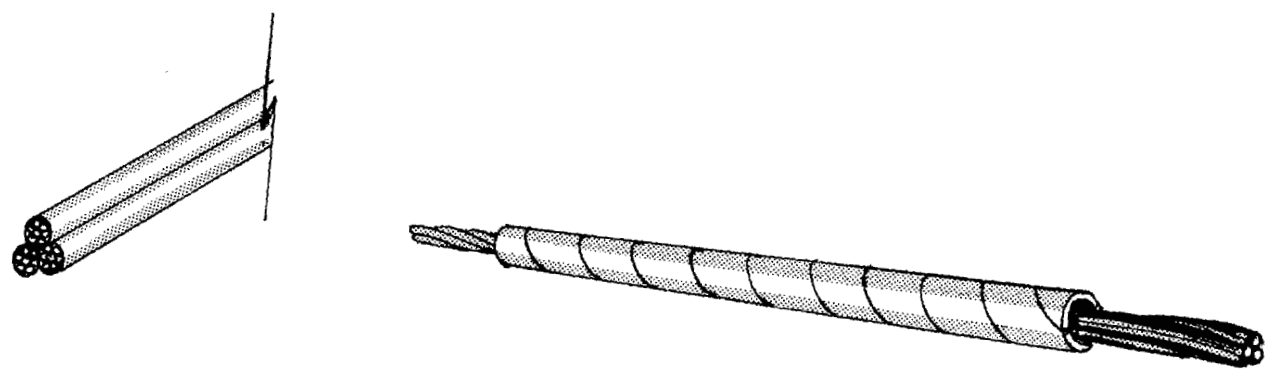

Figure 3
TREE GUARD INSTALLED ON SELF-SUPPORTING MULTIPLEX CABLES

Copyright National Electrical Manufacturers Association
Provided by IHS under license with NEMA
No reproduction or networking permitted without license from IHS
Not for Resale

Data Sheet 2
TREE GUARD
TYPE 1

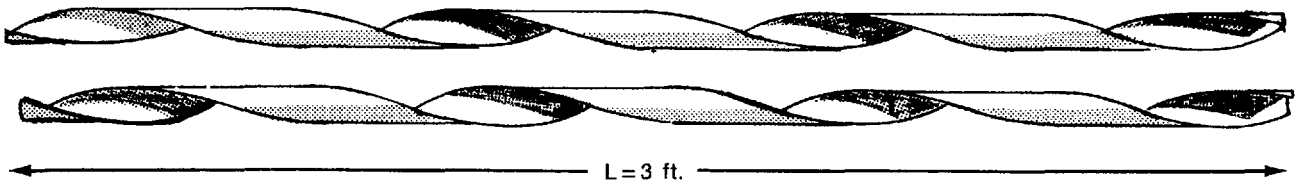

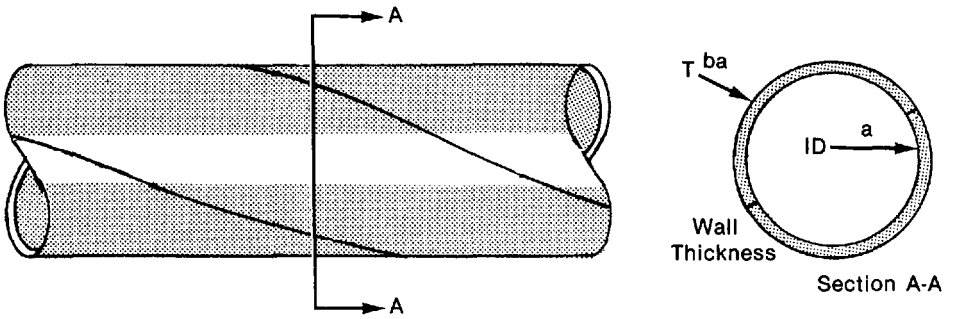

Item No.	I.D. Inside Diameter (in.)	T Wall Thickness (in.)
1	9/32	1/16
2	13/32	1/16
3	7/16	1/16
4	15/32	1/16
5	9/16	5/64
6	11/16	5/64
7	3/4	3/32
8	1	3/32

a- 1/64″
b- 1/32″
x-0″

ALLOWABLE VARIATIONS

Single letter indicates same + or −, a ± 1/64″.
Two letters indicate, first + second −, ax = + 1/64″ − 0″.

Copyright National Electrical Manufacturers Association
Provided by IHS under license with NEMA
No reproduction or networking permitted without license from IHS
Not for Resale

Data Sheet 3
TREE GUARD
TYPE 2

Item No.	I.D. Inside Diameter (in.)	T Wall Thickness (in.)
1	5/8	5/64
2	21/32	5/64
3	11/16	3/32
4	3/4	3/32
5	13/16	3/32
6	7/8	3/32
7	15/16	3/32
8	1	3/32
9	1 3/32	3/32

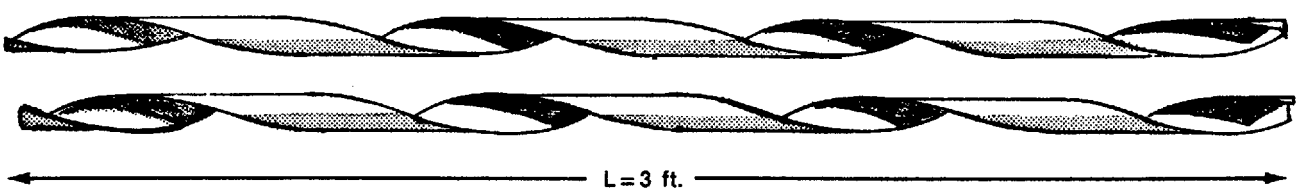

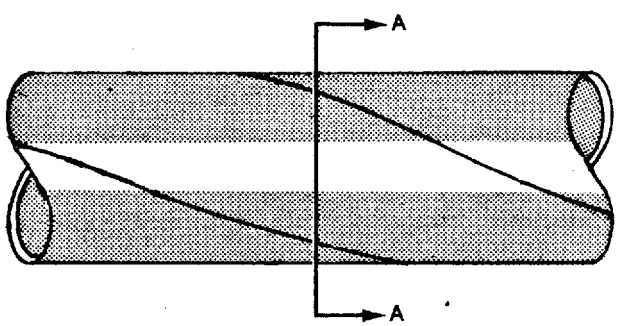

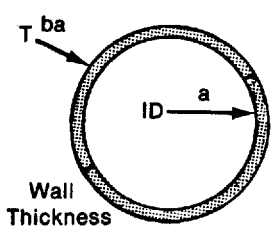

Section A-A

a- 1/64″
b- 1/32″
x = 0″

ALLOWABLE VARIATIONS

Single letter indicates same + or −, a = ± 1/64″.
Two letters indicate, first + second −, ax = + 1/64″ − 0″.

Copyright National Electrical Manufacturers Association
Provided by IHS under license with NEMA
No reproduction or networking permitted without license from IHS

Not for Resale

Data Sheet 4
TREE GUARD
TYPE 3

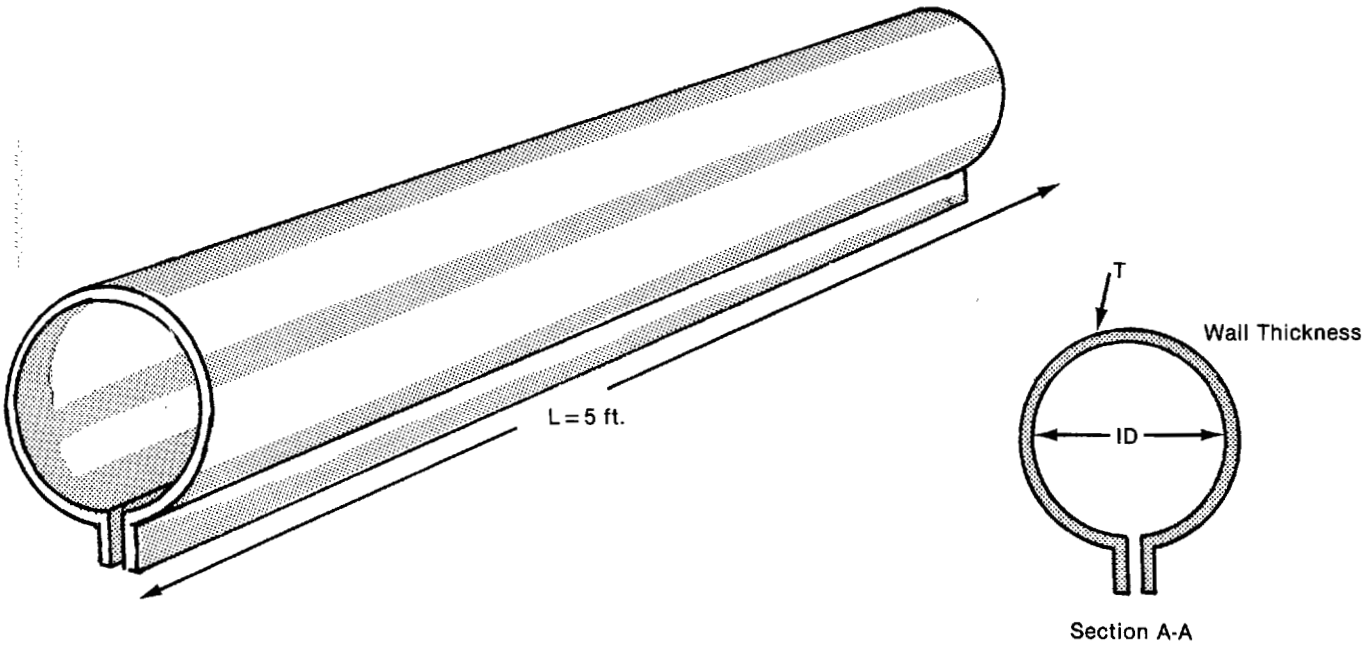

Item No.	I.D. Min. Inside Diameter (in.)	T Min. Wall Thickness (in.)
1	1	0.100

Copyright National Electrical Manufacturers Association
Provided by IHS under license with NEMA
No reproduction or networking permitted without license from IHS
Not for Resale

Data Sheet 5
TREE GUARD
TYPE 4

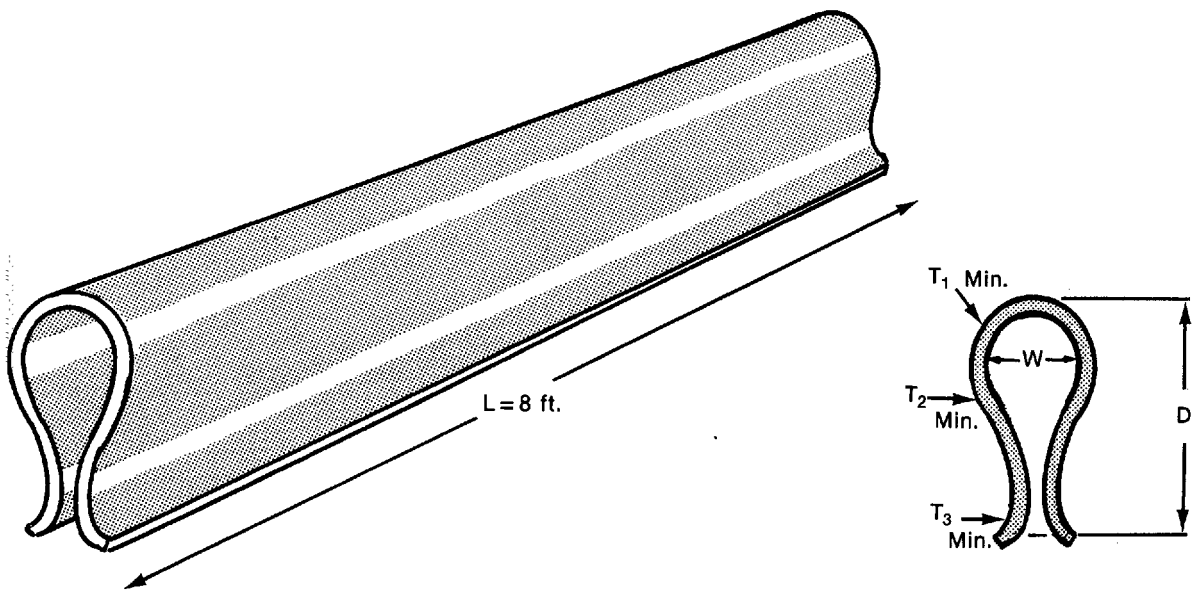

Item No.	W Min. Inside Width (in.)	D Min. Inside Depth (in.)	T Min. Wall Thickness (in.)		
			T1	T2	T3
1	1	2⅜	0.150	0.125	0.075

Copyright National Electrical Manufacturers Association
Provided by IHS under license with NEMA
No reproduction or networking permitted without license from IHS
Not for Resale

9009279 0004075 373

Data Sheet 6
TREE GUARD
TYPE 5

Item No.	I.D. (Nom.) Inside Diameter (in.)
1	½
2	⅝
3	¾
4	1

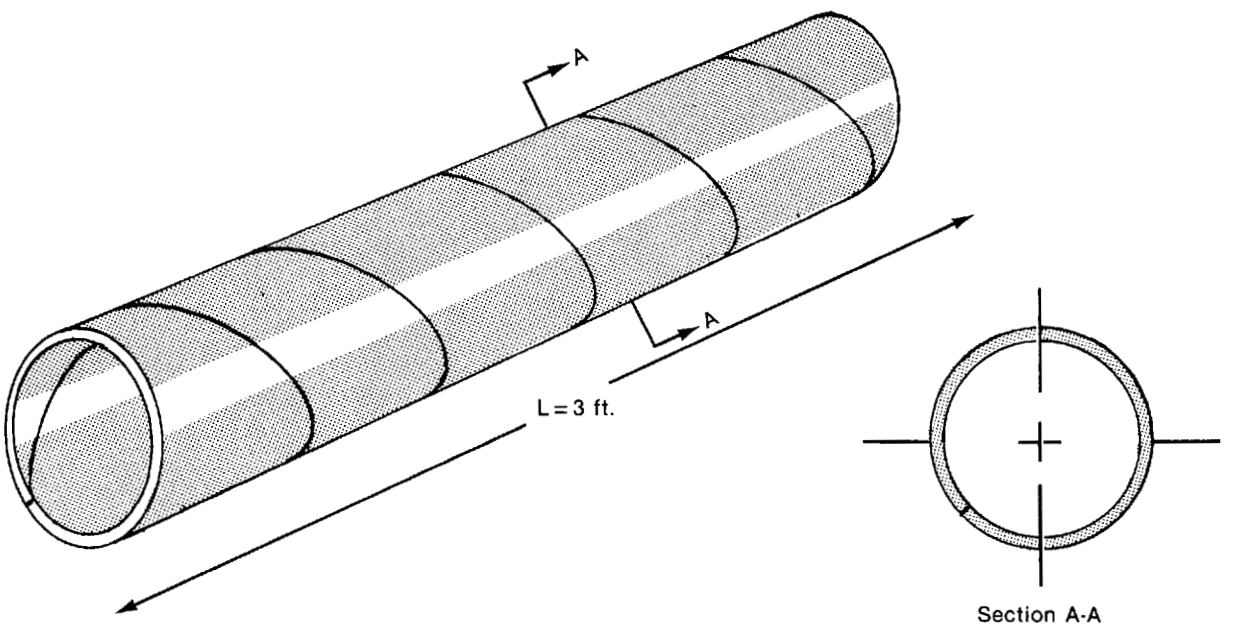

Copyright National Electrical Manufacturers Association
Provided by IHS under license with NEMA
No reproduction or networking permitted without license from IHS
Not for Resale

Data Sheet 7

FORMULAE TO DETERMINE DIAMETERS OF CIRCUMSCRIBED CIRCLES OF ROUND, MULTI-CONDUCTOR BARE AND COVERED CABLES OF EQUAL DIAMETER[1]

Cable Messenger Configurations	Diameter of Circumscribed Circle	Diameter of Largest Possible Messenger in the Interstices of Cables
Example 1 One Cable One Messenger 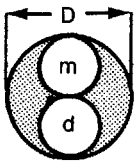 	D = (d + m)	...
Example 2 Two Cables One Messenger 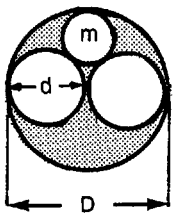 	D = 2 x d	m = 0.666 x d
Example 3 Three Cables One Messenger 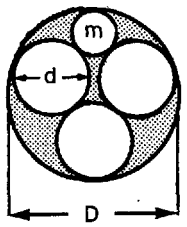 	D = 2.155 x d	m = 0.483 x d
Example 4 Four Cables One Messenger 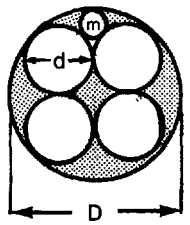 	D = 2.414 x d	m = 0.414 x d

[1]For sizing tree guards of unequal-diameter cables or messengers too large to fit interstices, graphically layout to scale.

Copyright National Electrical Manufacturers Association
Provided by IHS under license with NEMA
No reproduction or networking permitted without license from IHS
Not for Resale

9009279 0004077 146

NEMA STANDARDIZATION

The purpose of NEMA Standards, their classification and status are set forth in certain clauses of the NEMA Bylaws, which are quoted below:

Purpose of Standards

National Electrical Manufacturers Association Standards are adopted in the public interest and are designed to eliminate misunderstandings between the manufacturer and the purchaser and to assist the purchaser in selecting and obtaining the proper product for its particular need. Existence of a National Electrical Manufacturers Association Standard does not in any respect preclude any member or nonmember from manufacturing or selling products not conforming to the standard.

(Bylaw—Art. V, Sec. 1)

Definition of a Standard

A standard of the National Electrical Manufacturers Association defines a product, process or procedure with reference to one or more of the following: nomenclature, composition, construction, dimensions, tolerances, safety, operating characteristics, performance, rating, testing, and the service for which they are designed.

(Bylaw—Art. V, Sec. 2, Subsection A)

Dimensions

Where dimensions are given for interchangeability purposes, alternate dimensions satisfying the other provisions of the standards publication may be capable of otherwise equivalent performance.

(NEMA Policy Memorandum 84-2, dated June 7, 1984)

Classes of Standards

National Electrical Manufacturers Association Standards are of two classes:

1. NEMA Standard, which relates to a product commercially standardized and subject to repetitive manufacture, which standard has been approved by at least 90 percent of the members of the Subdivision eligible to vote thereon;
2. Suggested Standard for Future Design, which may not have been regularly applied to a commercial product, but which suggests a sound engineering approach to future development, which standard has been approved by at least two-thirds of the members of the Subdivision eligible to vote thereon.

(Bylaw—Art. V, Sec. 2, Subsection B)

Authorized Engineering Information

Authorized Engineering Information consists of explanatory data and other engineering information of an informative character not falling within the classification of NEMA Standard or Suggested Standard for Future Design.

(Bylaw—Art. V, Sec. 6, 1st Sentence)

Official Standards Proposal

An Official Standards Proposal is an official draft of a proposed standard which is formally recommended to an outside organization(s) for consideration, comment and/or approval.

(Bylaw—Art. V, Sec. 4, Subsection A)

Identification of Status

Standards in NEMA Standards Publications are identified in the foreword or following each standard as "NEMA Standard" or "Suggested Standard for Future Design." These indicate the status of the standard. These words are followed by a date which indicates when the standard was adopted in its present form by the Association.

The material identified as "Authorized Engineering Information" and "Official Standards Proposal" is designated similarly.

Copyright National Electrical Manufacturers Association
Provided by IHS under license with NEMA
No reproduction or networking permitted without license from IHS
Not for Resale

9009279 0004078 082

POLE AND TRANSMISSION LINE CONSTRUCTION MATERIALS SECTION OF THE NATIONAL ELECTRICAL MANUFACTURERS ASSOCIATION

MEMBER COMPANIES

A. B. Chance Company
Centralia, MO 65240

Carlon, An Indian Head Company
Cleveland, OH 44122

Bethea/National
Subsidiary of Interpace Corporation
Birmingham, AL 35202

Dixie Electrical Manufacturing Company
Birmingham, AL 35217

Stanley G. Flagg & Company
Montgomery County, PA 19464

Hercules Incorporated
Middletown, DE 19709

Joslyn Manufacturing & Supply Company
Chicago, IL 60609

McGraw Edison
East Stroudsburg, PA 18301

Plastigage Corporation
Jackson, MI 49204

Preformed Line Products Company
Cleveland, OH 44101

Reliable Electric Company
Franklin Park, IL 60131

Square D Company
Milwaukee, WI 53201

Utilities Service Company
Allentown, PA 18105

Printed in U.S.A.

Copyright National Electrical Manufacturers Association
Provided by IHS under license with NEMA
No reproduction or networking permitted without license from IHS
Not for Resale