9009279 0004055 585

STANDARDS PUBLICATION/NO. PH 41-1981

nema

Plastic Riser U-Guard

NEMA

NATIONAL ELECTRICAL MANUFACTURERS ASSOCIATION ■ 2101 L STREET, N.W., WASHINGTON, D.C. 20037

Copyright National Electrical Manufacturers Association
Provided by IHS under license with NEMA
No reproduction or networking permitted without license from IHS

Not for Resale

9009279 0004056 411

TABLE OF CONTENTS

Page

FOREWORD i
PURPOSE ii
SCOPE ii

Section1 GENERAL
Definition 1
Nominal Sizes 1
Nominal Length 1
Referenced Standards 1

Section 2 MATERIALS, DIMENSIONS AND WORKMANSHIP
Materials 2
Dimensions 2
Workmanship 2
Belled End 2
Ribbed Surfaces 2

Section 3 PERFORMANCE TESTS
Conditioning Test Specimens 3
Test Conditions 3
IMPACT TEST
Room Temperature Test 3
Low Temperature Test 3
Test Method 4

Secton 4 INSTALLATION 5

Section 5 MARKING 5

Section 6 SUNLIGHT RESISTANCE
Sunlight Resistance 5
Sunlight Resistance Test 5

List of Illustrations

FIGURES
2-1 Dimensions 2
3-1 Flange Restraint 4

TABLES
2-1 Dimensions 2
3-1 Minimum Drop-Weight Impact Resistance 3

© 1981 by National Electrical Manufacturers Association

Copyright National Electrical Manufacturers Association
Provided by IHS under license with NEMA
No reproduction or networking permitted without license from IHS
Not for Resale

9009279 0004057 358

Foreword

User needs have been considered throughout the development of these standards. Test methods and performance values have been related as closely as possible to end-use applications.

The Pole and Transmission Line Construction Materials Section of NEMA, through its members, has worked (and continues to work) closely with such organizations as the American Society for Testing and Materials, the Plastic Pipe Institute, appropriate government agencies, and others in the periodic review and revision of these standards for any changes necessary to keep them up to date with advancing technology. Proposed or recommended revisions should be submitted to:

Manager, Engineering Department
National Electrical Manufacturers Association
2101 L Street, N.W., Suite 300
Washington, D.C. 20037

Copyright National Electrical Manufacturers Association
Provided by IHS under license with NEMA
No reproduction or networking permitted without license from IHS
Not for Resale

Purpose

The purpose of these standards for Plastic Riser U-Guard is:

1. To define dimensions and other significant requirements.
2. To inform producers, distributors, engineers, code officials, and users about some of the properties of these products and to assist in selecting and obtaining the proper product for a particular need.

Scope

These standards cover requirements and methods of tests for materials, dimensions, workmanship, etc., of Plastic Riser U-Guard used on utility poles and intended for installation over vertically attached cables or wires.

Copyright National Electrical Manufacturers Association
Provided by IHS under license with NEMA
No reproduction or networking permitted without license from IHS
Not for Resale

9009279 0004059 120

PLASTIC RISER U-GUARD

Section 1

GENERAL

1.1 DEFINITION

Plastic Riser U-Guard is a plastic, U-shape molding intended to cover and provide suitable mechanical protection for wires or cables, or both, attached directly to utility poles in a vertical direction.

Authorized Engineering Information 3-4-1981.

1.2 NOMINAL SIZES

The nominal sizes of Plastic Riser U-Guard shall be 2, 3, 4 and 5 inches.

Authorized Engineering Information 3-4-1981.

1.3 NOMINAL LENGTH

The nominal length of Plastic Riser U-Guard shall be 5, 8, and 10 feet.

Authorized Engineering Information 3-4-1981.

1.4 REFERENCED STANDARDS

In this publication, reference is made to ASTM Standards. Copies are available from the American Society for Testing and Materials, 1916 Race Street, Philadelphia, PA 19103.

Authorized Engineering Information 3-4-1981.

Copyright National Electrical Manufacturers Association
Provided by IHS under license with NEMA
No reproduction or networking permitted without license from IHS
Not for Resale

Section 2

MATERIALS, DIMENSIONS AND WORKMANSHIP

2.1 MATERIALS

The Plastic Riser U-Guard shall be manufactured from a suitable plastic material meeting the dimension and performance requirements of this standard.

NEMA Standard 3-4-1981.

2.2 DIMENSIONS

The Plastic Riser U-Guard shall have dimensions as shown in Table 2-1 and Figure 2-1.

NEMA Standard 3-4-1981.

2.3 WORKMANSHIP

The Plastic Riser U-Guard shall be homogenous throughout and free from visible cracks or other defects. It shall be uniform as practicable in color, opacity, density, and other physical properties.

NEMA Standard 3-4-1981.

2.4 BELLED END

The Plastic Riser U-Guard shall be permitted to have one end belled to provide overlapping of individual sections. (Dimensions shown in Table 2-1 are not applicable for the belled end.)

NEMA Standard 3-4-1981.

2.5 RIBBED SURFACES

The Plastic Riser U-Guard shall be permitted to have a ribbed outer surface to provide better handling.

NEMA Standard 3-4-1981.

Table 2-1
DIMENSIONS

	Nominal Size Inches	A Minimum	B Nominal	C Nominal	D Nominal
Heavy Duty	2	0.154″	2.375″	4.5″	2.375″
	3	0.216″	3.500″	6.0″	3.500″
	4	0.237″	4.500″	6.5″	4.500″
	5	0.258″	5.500″	7.5″	5.500″
Standard Duty	2	0.100″	2.375″	4.5″	2.375″
	3	0.150″	3.500″	6.0″	3.500″
	4	0.150″	4.500″	6.5″	4.500″
	5	0.150″	4.500″	7.5″	5.500″

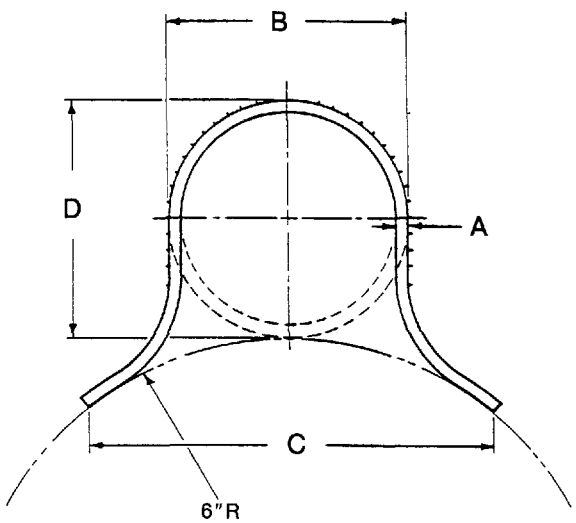

Figure 2-1
DIMENSIONS

Copyright National Electrical Manufacturers Association
Provided by IHS under license with NEMA
No reproduction or networking permitted without license from IHS
Not for Resale

9009279 0004061 889

Section 3

PERFORMANCE TESTS

3.1 CONDITIONING TEST SPECIMENS

When conditioning is required, the test specimens shall be conditioned in accordance with Procedure A in *Conditioning Plastics and Electrical Insulating Material for Testing,* ASTM D 618, (1977)[1] at 23 °C ± 2 °C (73.4 °F ± 3.6 °F) and 50 percent ± 5 percent relative humidity for not less than 40 hours prior to the test unless otherwise specified.

NEMA Standard 3-4-1981.

3.2 TEST CONDITIONS

Tests shall be conducted at 23 °C ± 2 °C (73.4 °F ± 3.6 °F) and 50 percent ± 5 percent relative humidity unless otherwise specified.

NEMA Standard 3-4-1981.

IMPACT TEST

3.3 ROOM TEMPERATURE TEST

Ten 6-inch (minimum) specimens on the surfaces of which there are no cracks, tears, or other imperfections shall be cut from finished lengths of each size of Plastic Riser U-Guard to be tested. The specimens, the test apparatus, and the surrounding air shall be in thermal equilibrium with one another at a temperature of 23 °C ± 2 °C (73.4 °F ± 3.6 °F) during the test. The test apparatus and method shall be described in 3.5.

NEMA Standard 3-4-1981.

3.4 LOW TEMPERATURE TEST

Ten 6-inch (minimum) specimens on the surface of which there are no cracks, tears, or other imperfections shall be cut from finished lengths of each size of Plastic Riser U-Guard to be tested. The specimens shall then be conditioned at a temperature of 0 °C ± 20 °C (32 °F ± 3.6 °F) for 5 hours. The test apparatus shall be at a room temperature of 23 °C ± 2 °C (73.4 °F ± 3.6 °F). The samples shall be removed from the cold chamber and immediately tested for impact in accordance with 3.5.

[1]For order information, see 1.4.

Table 3-1
MINIMUM DROP-WEIGHT IMPACT RESISTANCE

	Nominal Size, Inches	Room Temperature Test (23 °C)—(73.4 °F) Ft./Lb.	Low Temperature Test (0 °C)—(32 °F) Ft./Lb.
Heavy Duty	2	300	75
	3	525	130
	4	525	130
	5	525	130
Standard Duty	2	190	50
	3	220	55
	4	220	55
	5	220	55

Copyright National Electrical Manufacturers Association
Provided by IHS under license with NEMA
No reproduction or networking permitted without license from IHS
Not for Resale

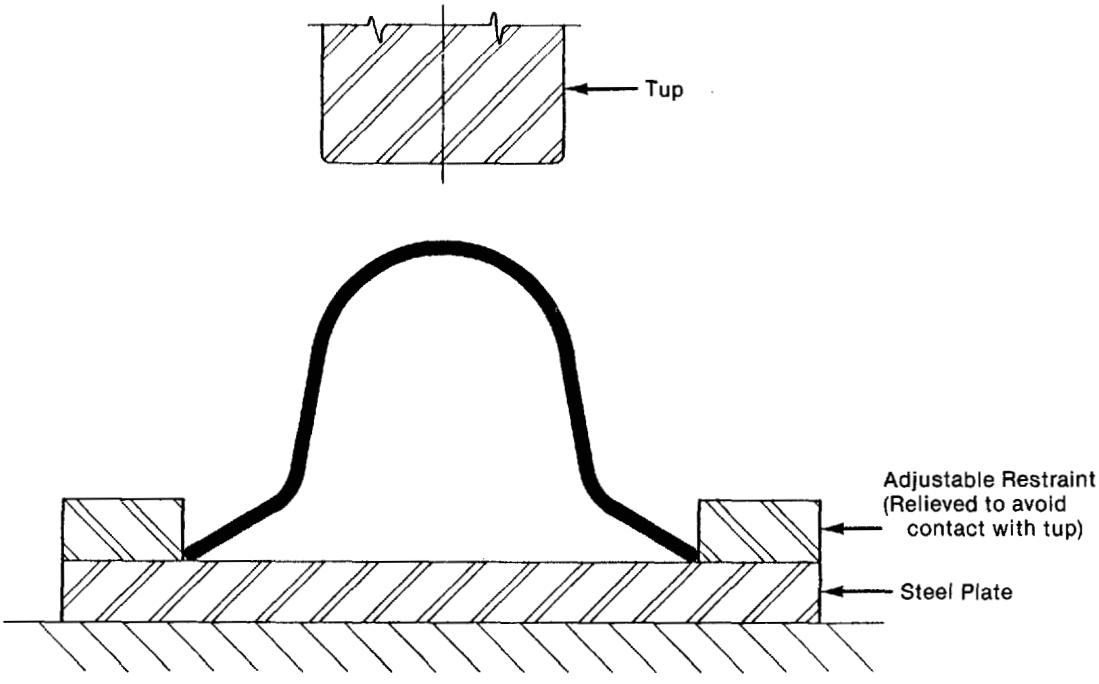

Figure 3-1
FLANGE RESTRAINT

The time between removal of the sample from the cold chamber and completion of impact shall not exceed 15 seconds.

NEMA Standard 3-4-1981.

3.5 TEST METHOD

The specimens shall be tested in accordance with *Impact Resistance of Thermalplastic Pipe and Fittings By Means of Tup,* ASTM D 2444, (1977)[2] using a 75 pound (34 kg) steel tup in the form of a 6-inch (150 mm) right circular cylinder with rounded edges for heavy duty room temperature test and a 20-pound (9-kg) steel tup in the form of a 2-inch (51 mm) right circular cylinder with rounded edges for all other tests. The flanges of a specimen shall be restrained as shown in Figure 3-1. The restraint will simulate installation on a pole.

The minimun impact strength shall be in accordance with Table 3-1. The sample does not meet the requirements of this standard if more than three of the ten specimens exhibit a split or crack through the wall greater than $\frac{1}{32}$-inch in length.

NEMA Standard 3-4-1981.

[2]For order information, see 1.4.

Copyright National Electrical Manufacturers Association
Provided by IHS under license with NEMA
No reproduction or networking permitted without license from IHS
Not for Resale

Section 4

INSTALLATION

4.1 INSTALLATION PROCEDURES

For proper installation, refer to the procedures recommended by the manufacturer.

Authorized Engineering Information 3-4-1981.

Section 5

MARKING

5.1 MARKING

Each length of U-Guard shall be clearly and durably marked at least every 5 feet with the material designation, nominal size and duty of the U-Guard, control number, and with the name or trademark of the manufacturer, or both.

NEMA Standard 3-4-1981.

Section 6

SUNLIGHT RESISTANCE

6.1 SUNLIGHT RESISTANCE

U-Guard shall be made from a plastic that has been demonstrated to have sunlight resistance. The plastic shall be qualified by the procedure in 6.2.

NEMA Standard 3-4-1981.

6.2 SUNLIGHT RESISTANCE TEST

Using *Outdoor Weathering of Plastics,* ASTM D 1435, (1979)[3] as a guide, ten impact specimens of any one size U-Guard shall be exposed outdoors in a fixed, 45° South position to a minimun of 100,000 Langleys[4]. At the completion of the exposure period, the exposed specimens shall be tested for impact resistance per paragraph 3.3 of these standards. The impact resistance level of the exposed samples shall not be less than 50 percent of the values shown in Table 3-1. All other sizes made from the same material shall be considered to meet the sunlight resistance requirements based on sunlight resistance testing of any one size.

NEMA Standard 3-4-1981.

[3]For order information, see 1.4.

[4]A Langley is a unit for measuring solar radiation and for timing outdoor exposures. Each Langley unit denotes one gram calorie per sq. Cm or 3.69 BTU's per ft^2. 180,000 Langleys are approximately equivalent to 12 months exposure at 45° South in Arizona.

Copyright National Electrical Manufacturers Association
Provided by IHS under license with NEMA
No reproduction or networking permitted without license from IHS

Not for Resale

9009279 0004064 598

NEMA STANDARDIZATION

The purpose of NEMA Standards, their classification and status are set forth in certain clauses of the NEMA Bylaws, which are quoted below:

Purpose of Standards

National Electrical Manufacturers Association Standards are adopted in the public interest and are designed to eliminate misunderstandings between the manufacturer and the purchaser and to assist the purchaser in selecting and obtaining the proper product for its particular need. Existence of a National Electrical Manufacturers Association Standard does not in any respect preclude any member or nonmember from manufacturing or selling products not conforming to the standard.

(Bylaw—Art. V, Sec. 1)

Definition of a Standard

A standard of the National Electrical Manufacturers Association defines a product, process or procedure with reference to one or more of the following: nomenclature, composition, construction, dimensions, tolerances, safety, operating characteristics, performance, rating, testing, and the service for which they are designed.

(Bylaw—Art. V, Sec. 2, Subsection A)

Dimensions

Where dimensions are given for interchangeability purposes, alternate dimensions satisfying the other provisions of the standards publication may be capable of otherwise equivalent performance.

(NEMA Policy Memorandum 84-2, dated June 7, 1984)

Classes of Standards

National Electrical Manufacturers Association Standards are of two classes:

1. NEMA Standard, which relates to a product commercially standardized and subject to repetitive manufacture, which standard has been approved by at least 90 percent of the members of the Subdivision eligible to vote thereon;
2. Suggested Standard for Future Design, which may not have been regularly applied to a commercial product, but which suggests a sound engineering approach to future development, which standard has been approved by at least two-thirds of the members of the Subdivision eligible to vote thereon.

(Bylaw—Art. V, Sec. 2, Subsection B)

Authorized Engineering Information

Authorized Engineering Information consists of explanatory data and other engineering information of an informative character not falling within the classification of NEMA Standard or Suggested Standard for Future Design.

(Bylaw—Art. V, Sec. 6, 1st Sentence)

Official Standards Proposal

An Official Standards Proposal is an official draft of a proposed standard which is formally recommended to an outside organization(s) for consideration, comment and/or approval.

(Bylaw—Art. V, Sec. 4, Subsection A)

Identification of Status

Standards in NEMA Standards Publications are identified in the foreword or following each standard as "NEMA Standard" or "Suggested Standard for Future Design." These indicate the status of the standard. These words are followed by a date which indicates when the standard was adopted in its present form by the Association.

The material identified as "Authorized Engineering Information" and "Official Standards Proposal" is designated similarly.

Copyright National Electrical Manufacturers Association
Provided by IHS under license with NEMA
No reproduction or networking permitted without license from IHS
Not for Resale

9009279 0004065 424

POLE AND TRANSMISSION LINE CONSTRUCTION MATERIALS SECTION
OF THE
NATIONAL ELECTRICAL MANUFACTURERS ASSOCIATION

MEMBER COMPANIES

A. B. Chance Company
Centralia, MO 65240

Carlon, An Indian Head Company
Cleveland, OH 44122

Bethea/National
Subsidiary of Interpace Corporation
Birmingham, AL 35202

Dixie Electrical Manufacturing Company
Birmingham, AL 35217

Stanley G. Flagg & Company
Montgomery County, PA 19464

Hercules Incorporated
Middletown, DE 19709

Joslyn Manufacturing & Supply Company
Chicago, IL 60609

McGraw Edison
East Stroudsburg, PA 18301

Plastigage Corporation
Jackson, MI 49204

Preformed Line Products Company
Cleveland, OH 44101

Reliable Electric Company
Franklin Park, IL 60131

Square D Company
Milwaukee, WI 53201

Utilities Service Company
Allentown, PA 18105

Printed in U.S.A.

Copyright National Electrical Manufacturers Association
Provided by IHS under license with NEMA
No reproduction or networking permitted without license from IHS
Not for Resale