NEMA PE*7 85 ■ 6470247 0505932 125 ■

STANDARDS PUBLICATION/NO. PE 7

nema

Communication Type Battery Chargers

NEMA

NATIONAL ELECTRICAL MANUFACTURERS ASSOCIATION ■ 2101 L STREET, N.W., WASHINGTON, D.C. 20037

Copyright National Electrical Manufacturers Association
Provided by IHS under license with NEMA
No reproduction or networking permitted without license from IHS
Not for Resale

NEMA PE*7 85 ■ 6470247 0505933 061 ■

PE 7

COMMUNICATION TYPE BATTERY CHARGERS

ANSI Approval: July 14, 1986

Reaffirmation November 1991–No Text Changes Were Made

Published by

National Electrical Manufacturers Association
2101 L Street, NW
Suite 300
Washington, DC 20037

© 1992 by National Electrical Manufacturers Association

Copyright National Electrical Manufacturers Association
Provided by IHS under license with NEMA
No reproduction or networking permitted without license from IHS

Not for Resale

TABLE OF CONTENTS

		Page
	FOREWORD	i
	SCOPE	ii
Section 1	REFERENCED STANDARDS	1
Section 2	DEFINITIONS	2
Section 3	ALTERNATING-CURRENT INPUT CHARACTERISTICS	
	Rated Alternating-current Voltages	5
	Rated Input Current	5
	Alternating-current System Grounding	5
	Unbalance (Three-phase)	5
	Line Surges	5
	Frequency Range Classifications	5
Section 4	DIRECT-CURRENT OUTPUT CHARACTERISTICS	
	Direct-current Voltages	6
	Nominal Direct-current Voltage	6
	Rated Direct-current Output Voltage	6
	Performance Condition	6
	Load Range Classifications	6
	Full-float Rectifiers	6
	Partial-float Rectifiers	6
	Voltage Adjustment Range	6
	Float Voltage Adjustment Range	6
	Equalize Voltage Adjustment Range	6
	Voltage Deviation (Regulation)	6
	Float Voltage Deviation (Regulation)	6
	Equalize Voltage Deviation (Regulation)	6
	Effect of Temperature Change (All Other Conditions Constant)	6
	Current Limiting	7
	Abnormal Load Conditions	7
	Dynamic Response	7
	Load Change	7
	Input Voltage Change	7
	Start-up Behavior	7
	Effect of Voltage Surges	7
Section 5	NOISE CHARACTERISTICS	
	General	8
	Input Noise (Conducted)	8
	Weighted Noise	8
	Unweighted Noise	8
	Output Noise (Conducted)	8
	Weighted Noise	8
	Unweighted Noise	8
	Audible Noise	8
	Radio Frequency Noise	8
Section 6	SAFETY	
	General	10
	Requirements	10

(continued)

Copyright National Electrical Manufacturers Association
Provided by IHS under license with NEMA
No reproduction or networking permitted without license from IHS
Not for Resale

TABLE OF CONTENTS (CONTINUED)

Section 6 SAFETY *(continued)*

Grounding 10
Equipment Grounding 10
Alternating-current Circuit Ground 10
Dead Metal Parts 10
Live Metal Parts 10
Leakage Current 10
Dielectric Requirements 10

Section 7 ENVIRONMENTAL REQUIREMENTS
Operating Temperature 11
Storage 11
Altitude 11
Humidity 11
Vibration 11
Shock 11
Unusual Service Conditions 11

Section 8 SUPERVISORY CONTROLS
Supervisory Controls 12
Rectifier Failure Alarm 12
Low Direct-current Voltage Alarm 12
High Direct-current Voltage Alarm 12
High Direct-current Voltage Shutdown 12
Selective High Direct-current Voltage Shutdown 12
Low Direct-current Alarm 12
Alternating-current Power Failure Alarm 12
Low Alternating-current Voltage Alarm 12

Section 9 MECHANICAL DESIGN REQUIREMENTS
General 13
Mechanical Design Classifications 13
Ventilation Class 1 13
Ventilation Class 2 13
Control Circuit Access 13
Plug-in Circuit Components 13
Mounting 13
Mounting Holes 13
Mounting Hole Spacing 13
Mounting Hole Centers and Mounting Rack Inside Dimensions 14
Rectifier Width 14
Nameplate Marking 14
Marking 14
Parts 14
Controls 15
Terminal and Lead Markings 15
Wiring Practices 15
Ventilation 15
Ventilation Class 1 Rectifiers 15
Ventilation Class 2 Rectifiers 15
Installation Cable Access 15

(continued)

--`,,``,,-`-`,,`,,`,`,,`---

Copyright National Electrical Manufacturers Association
Provided by IHS under license with NEMA
No reproduction or networking permitted without license from IHS

Not for Resale

TABLE OF CONTENTS (CONTINUED)

Section 10 COMPONENT REQUIREMENTS
General....16
Minimum Components....16
Additional Components....16

Section 11 TEST METHODS
Design (Type) Tests....17
Direct-current Output Tests....17
Voltage Adjust Test....17
Voltage Deviation (Regulation) Test....17
Temperature Change Test....18
Current Limit Test....18
Dynamic Response....18
Voltage Surge Test....18
Input Noise Tests....18
Weighted Noise Tests....18
Unweighted Noise Tests....18
Output Noise Tests....20
Weighted Noise Tests....20
Unweighted Noise Tests....20
Radio Frequency Noise Tests....20
Audible Noise Tests....20
Efficiency Test....20
Power Factor/Displacement Factor Tests....21
Leakage Current Tests....21
Short-circuit Protection at the Output....21
Dielectric Test....21
Temperature Rise Tests....21
Production Tests....22

Section 12 DOCUMENTATION
General....23
Instruction Manuals....23
Test Reports....23

Section 13 APPLICATION DATA CHECKLIST

LIST OF ILLUSTRATIONS

Table 3-1 Rated Voltages....5
Table 10-1 Transformer Temperature Rise Values....16
Table 12-1 Instruction Manuals....23

Figure 2-1 C-Message Weighting Curve....3
Figure 5-1 Broadband Conducted Interference Limit....9
Figure 9-1 Mounting Holes....13
Figure 9-2 Preferred Rack or Rack Cabinet Hole Spacing (Typical Top and Bottom)....14
Figure 9-3 Mounting Hole Centers, Mounting Rack Inside Dimensions and Rectifier Width Dimensions....14
Figure 11-1 Direct-Current Output Test Circuit....17
Figure 11-2 Voltage Surge Test Circuit....19
Figure 11-3 Weighted Noise Test Circuit....19
Figure 11-4 Unweighted Noise Test Circuit....20

Copyright National Electrical Manufacturers Association
Provided by IHS under license with NEMA
No reproduction or networking permitted without license from IHS
Not for Resale

Foreword

User needs have been considered throughout the development of this Standards Publication.

This Standards Publication provides practical information concerning the construction, test, performance, and safety of communications type battery chargers. The performance and safety tests included in this document form a part of the attempt to provide protection for the operator, the battery, and the battery charger.

This Standards Publication is reviewed periodically by the Power Electronics Section of NEMA for any revisions necessary to keep it up to date with advancing technology.

Comments are welcomed and should be addressed to:

Manager, Engineer Department
National Electrical Manufacturers Association
2101 L Street, N. W.
Washington, D.C. 20037

Copyright National Electrical Manufacturers Association
Provided by IHS under license with NEMA
No reproduction or networking permitted without license from IHS
Not for Resale

Scope

This Standards Publication applies to alternating- and direct-current power rectifier equipment for floating and charging a battery and delivering power to telecommunications type loads. The battery is a vented lead-acid type and is grounded at some point. The charging equipment (rectifier) provides transformer isolation of the direct-current output from the alternating-current input and is designed for indoor stationary mounting and continuous operation with stabilization and control achieved through static means. Rectifiers of 300 kilowatts output or less, and operating from 60 hertz nominal, single- or three-phase input, are covered by this Standards Publication.

--`,,,``,,-`-`,,`,,`,`,,`---

Copyright National Electrical Manufacturers Association
Provided by IHS under license with NEMA
No reproduction or networking permitted without license from IHS

Not for Resale

COMMUNICATION TYPE BATTERY CHARGERS

Section 1

REFERENCED STANDARDS

Provided below is a complete listing of the titles and publication numbers of all standards referenced, in part or in full, in this Standards Publication. The mailing address of each referenced organization is also provided.

American National Standards Institute
1430 Broadway
New York, NY 10018

C63.4-1981	*Radio-Noise Voltage and Radio-Noise Field Strength, 0.015 to 25 Megacycles/Second, Low-Voltage Electric Equipment, and Nonelectric Equipment, Methods of Measurement of*
C84.1-1982	*Voltage Ratings for Electric Power Systems and Equipment (60 Hz)*
C101.1-1973	*Leakage Current for Appliances*
S1.4-1983	*Sound Level Meters, Specification for*
ANSI/IEEE 100-1984	*IEEE Standard Dictionary of Electrical and Electronic Terms.*
ANSI/NFPA 70-1984	*National Electrical Code*

National Electrical Manufacturers Association
2101 L Street, N.W.
Washington, D.C. 20037

PE 5-1985	*Utility Type Battery Chargers*

Copyright National Electrical Manufacturers Association
Provided by IHS under license with NEMA
No reproduction or networking permitted without license from IHS

Not for Resale

Section 2

DEFINITIONS

The terms listed in this section are defined as applied in this Standards Publication. Definitions marked with an asterisk(*) are in accordance with ANSI/IEEE 100.

2.1 AMBIENT TEMPERATURE

Ambient temperature is the temperature of the medium, such as air or water, used to cool the apparatus.

NEMA Standard 11-14-1985.

2.2 AMPERE-HOUR CAPACITY

The ampere-hour capacity of a storage battery is the number of ampere hours which shall be delivered under specified conditions as to temperature, rate of discharge, and final voltage.

The abbreviation AH, as used in this Standards Publication, is the ampere-hour capacity at the 8-hour rate at 25 °C (77 °F) if the lead-acid battery is discharged down to 1.75 volts per cell.

NEMA Standard 11-14-1985.

2.3 C-MESSAGE WEIGHTING

A noise weighting used in a noise measuring set to circuit noise power in dB referred to 1.0 picowatt (-90 dBm) which is 0 dBrn. The C-message weighting curve is shown Figure 2-1.

NEMA Standard 11-14-1985.

2.4 DBrnc*

The abbreviation dBrnc stands for the decibels above reference noise (meter reading of measuring set using C-message weighting network).

NEMA Standard 11-14-1985.

2.5 DISPLACEMENT POWER FACTOR*

Displacement power factor is the displacement component of power factor; the ratio of the active power of the fundamental wave, in watts, to the apparent power of the fundamental wave, in root-mean-square (rms) volt-amperes (including the exciting current of the rectifier transformer).

NEMA Standard 11-14-1985.

2.6 EQUALIZING CHARGE (STORAGE BATTERY) (STORAGE CELL)*

An equalizing charge is an extended charge to a measured end point that is given to a storage battery to assure the complete restoration of the active materials in all the plates of all the cells.

NEMA Standard 11-14-1985.

2.7 FLC

The abbreviation FLC is the full-load current rating of the rectifier.

NEMA Standard 11-14-1985.

2.8 FLOATING

Floating is a method of operation for storage batteries in which a constant voltage is applied to the battery terminals sufficient to maintain an approximately constant state of charge.

NEMA Standard 11-14-1985.

2.9 HARMONIC DISTORTION

Harmonic distortion is a nonlinear distortion of a system or transducer characterized by the appearance in the output of harmonics other than fundamental component when the input wave is sinusoidal.

NEMA Standard 11-14-1985.

2.10 I•T PRODUCT (ELECTRIC SUPPLY CIRCUIT CURRENT WORKBOOK)

I•T product is the inductive influence expressed in terms of the product of its root-mean-square (rms) magnitude in amperes (I) times its telephone influence factor (TIF), abbreviated as I•T product.

NEMA Standard 11-16-1978.

2.11 OUTPUT VOLTAGE DEVIATION (REGULATION)

Output voltage deviation is the excursion of the output voltage resulting from changes in influence quantities (sometimes referred to as regulation).

$$\text{Percent Deviation (Regulation)} = \frac{E_{maximum} - E_{minimum}}{E_{maximum} + E_{minimum}} \times 100$$

NEMA Standard 11-14-1985.

2.12 PARALLEL OPERATION (RECTIFIERS)

Parallel operation means that two or more rectifiers

Copyright National Electrical Manufacturers Association
Provided by IHS under license with NEMA
No reproduction or networking permitted without license from IHS
Not for Resale

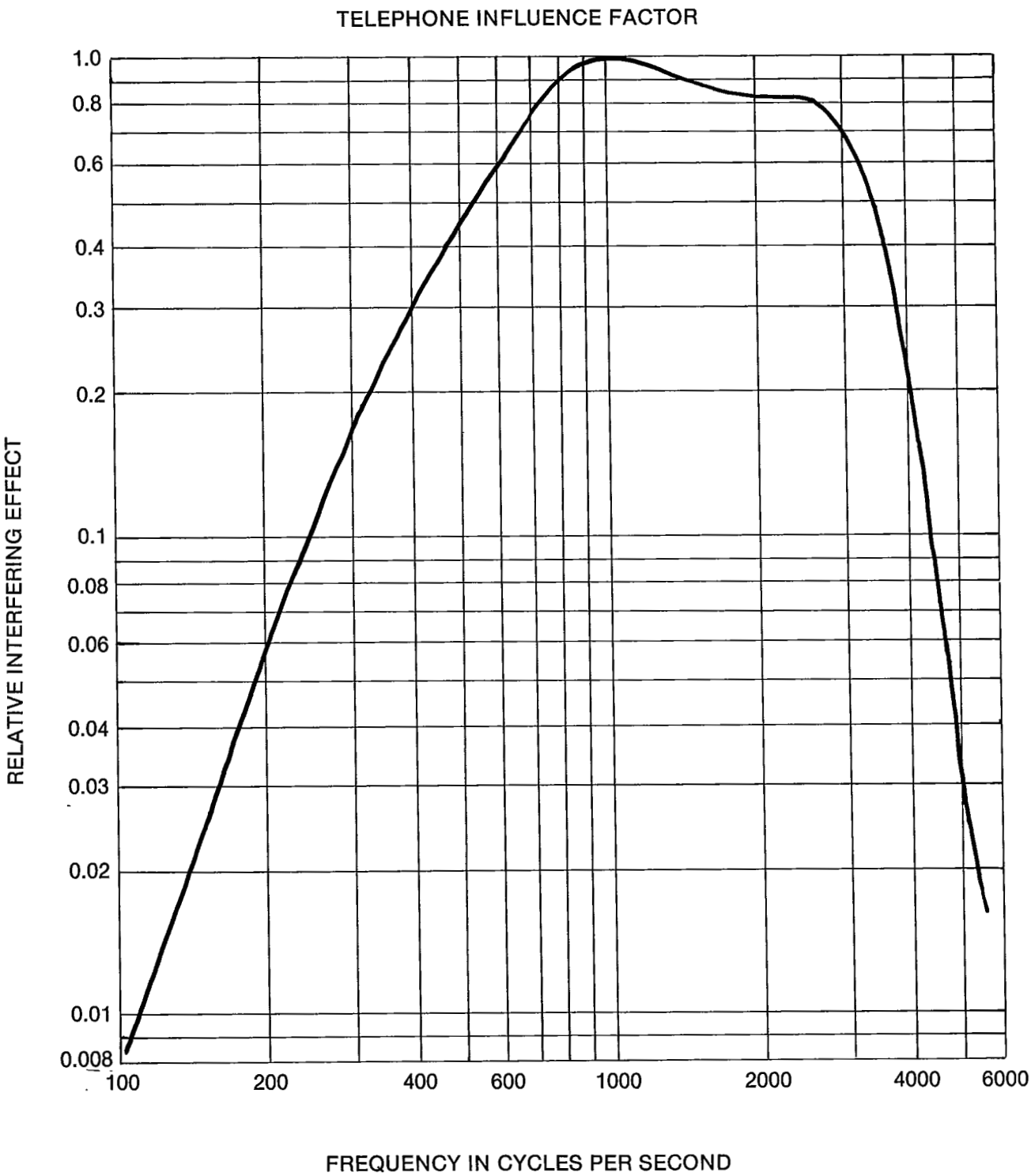

Figure 2-1
C-MESSAGE WEIGHTING CURVE

--`,,`,`,-`-`,,`,,`,`,,`---

Copyright National Electrical Manufacturers Association
Provided by IHS under license with NEMA
No reproduction or networking permitted without license from IHS

Not for Resale

simultaneously connected to a common direct-current load, are to be operating in parallel, whether they are equally sharing the load or not.

NEMA Standard 11-14-1985.

2.13 POWER FACTOR*

2.13.1 General

The ratio of total watts to the total root-mean-square (rms) volt-amperes.

$$Fp = \frac{\Sigma \text{ Watts per phase}}{\Sigma \text{ rms volt-amperes per phase}}$$

$$= \frac{\text{Active Power}}{\text{Apparent Power}}$$

If the voltages have the same wave form as the corresponding current, power factor is the same as phasor power factor. If the voltages and currents are sinusoidal and, for polyphase circuits, form symmetrical sets, then:

$Fp = \text{Cos } (\alpha - \beta)$
α = voltage phase angle.
β = current phase angle.

NEMA Standard 11-14-1985.

2.13.2 Rectifier or Rectifier Unit

The ratio of the total watts input to the total volt-ampere input to the rectifier, or rectifier unit.

This definition includes the effect of harmonic components of current and voltage, the effect of phase displacement between the current and voltage, and the exciting current of the transformer. Volt-ampere is the product of root-mean-square volts and root-mean-square amperes.

It is determined at the alternating-current line terminals of the rectifier unit.

NEMA Standard 11-14-1985.

2.14 RECTIFIER (COMMUNICATIONS TYPE BATTERY CHARGER)

In this Standards Publication, the terms rectifier and battery charger are interchangeable. The rectifier includes the rectifying elements, power transformer, filter elements, regulating and control elements, and shall (1) provide charging power to a storage battery, or (2) supply charging power to a battery and, at the same time, supply power to the connected load.

NEMA Standard 11-14-1985.

2.15 REMOTE SENSING

Remote sensing is a means by which the rectifier maintains the stabilized value of output voltage at an external point (such at the battery or load) rather than at its output terminals. This shall be accomplished by connecting the voltage sensing leads of the rectifier to the external point.

NEMA Standard 11-14-1985.

2.16 RIPPLE VOLTAGE (RECTIFIER OR GENERATOR)*

Ripple voltage is the alternating component of the unidirectional voltage from a direct-current power supply arising from sources within the power supply.

NEMA Standard 11-14-1985.

2.17 TELEPHONE INFLUENCE FACTOR (TIF)*

Of a voltage or current wave in an electric supply circuit, telephone influence factor is the ratio of the square root of the sum of the squares of the weighted root-mean-square values of all the sine wave components (including in alternating-current waves both fundamental and harmonics) to the root-mean-square value (unweighted) of the entire wave.

This factor was formerly known as telephone interference factor, a term still used occasionally when referring to values based on the original (1919) weighting curve.

NEMA Standard 11-14-1985.

Copyright National Electrical Manufacturers Association
Provided by IHS under license with NEMA
No reproduction or networking permitted without license from IHS
Not for Resale

Section 3

ALTERNATING-CURRENT INPUT CHARACTERISTICS

3.1 RATED ALTERNATING-CURRENT VOLTAGES

The input voltage ratings of communication-type rectifiers shall be in accordance with Table 3-1. Unless otherwise specified, the range of values of 60-hertz input voltages over which performance is specified shall be in accordance with ANSI C84.1 as shown in Table 3-1.

Table 3-1
RATED VOLTAGES

Rectifier Rated Voltage and Nominal System Voltage		Rectifier Input Voltage Range	
1 ø	3 ø	Minimum	Maximum
120	...	106	127
...	208	184	220
240	240	212	254
...	480	424	508
...	600	530	635

The input voltage range values are the maximum and minimum voltages expected at locations where utilization equipment is connected, taking into account variations in load and distribution voltages. Ordinarily distribution transformer secondaries are rated at nominal system voltages.

NEMA Standard 11-14-1985.

3.2 RATED INPUT CURRENT

Rated alternating-current input current is the rms value of current delivered to the rectifier at rated alternating-current input voltage, rated direct-current output voltage and full-load current.

NEMA Standard 11-14-1985.

3.3 ALTERNATING-CURRENT SYSTEM GROUNDING

The alternating-current supply may be grounded in any manner permitted by ANSI/NFPA 70, the National Electrical Code.

Authorized Engineering Information 11-14-1985.

3.4 UNBALANCE (THREE PHASE)

The line-to-line input voltages to three-phase rectifiers shall not be unbalanced by more than 5 percent, i.e., the maximum voltage shall be no more than 105 percent of the minimum voltage. All voltages shall be within the limits shown in Table 3-1.

NEMA Standard 11-14-1985.

3.5 LINE SURGES

A pulse of 1.5 microsecond rise time and 20 microsecond width (measured at the half voltage points) of the following magnitude shall be present on the alternating-current supply:

a. *Nominal System Voltage of 240 Volts or Less* — 1500 volts peak (either polarity).
b. *Nominal System Voltage over 240 Volts* — 3000 volts peak (either polarity).

NEMA Standard 11-14-1985.

3.6 FREQUENCY RANGE CLASSIFICATIONS

Where the alternating-current supply is commercial power, the frequency shall be 60 ± 0.1 hertz.

NEMA Standard 11-16-1978.

Where the alternating-current supply is standby power, the frequency should be 60 ± 3 hertz.

Authorized Engineering Information 11-14-1985.

Copyright National Electrical Manufacturers Association
Provided by IHS under license with NEMA
No reproduction or networking permitted without license from IHS
Not for Resale

Section 4

DIRECT-CURRENT OUTPUT CHARACTERISTICS

4.1 DIRECT-CURRENT VOLTAGES

4.1.1 Nominal Direct-current Voltage

The nominal voltage shall be the value of 2 volts per cell, times the number of series-connected cells for which the rectifier is intended. The highest nominal voltage covered by this standard shall be 300 volts for 150 series-connected cells.

NEMA Standard 11-14-1985.

4.1.2 Rated Direct-current Output Voltage

The minimum rated output voltage shall be at least the value of 2.15 volts per cell, times the number of series-connected cells for which the rectifier is intended, plus 1 volt.

NEMA Standard 11-14-1985.

4.2 PERFORMANCE CONDITION

All performance requirements shall be met with the battery, rectifier, and load interconnected in accordance with 11.2 and as shown in Figure 11-1.

Remote sensing leads, when provided, shall be connected to the battery terminals.

NEMA Standard 11-14-1985.

4.3 LOAD RANGE CLASSIFICATIONS

4.3.1 Full-float Rectifiers

For rectifiers categorized as full float, the voltage deviation (regulation) shall be specified over the load range of 1 to 100 percent.

NEMA Standard 11-14-1985.

4.3.2 Partial-float Rectifiers

For rectifiers categorized as partial float, the voltage deviation (regulation) shall be specified over the load range of 10 to 100 percent except that when the charging voltage at 10 percent load or greater is set to a maximum of 2.35 volts per cell, the voltage rise shall not exceed a value of 2.45 volts per cell (4 percent) when the load drops below 10 percent.

NEMA Standard 11-14-1985.

4.4 VOLTAGE ADJUSTMENT RANGE

Controls shall be provided to enable continuous adjustment of the level of direct-current output (within 0.005 volts per cell) over the following ranges:

4.4.1 Float Voltage Adjustment Range

The range for this control at rated alternating-current input voltage and half-load shall be 2.15 to 2.35 volts per cell times the number of series-connected cells for which the rectifier is intended. Follow battery manufacturer's instructions for proper voltage setting.

NEMA Standard 11-14-1985.

4.4.2 Equalize Voltage Adjustment Range

When provided, the range of this control, at rated alternating-current input voltage and half load shall be 2.20 to 2.45 volts per cell, times the number of cells for which the rectifier is intended. Follow battery manufacturer's instructions for proper voltage setting.

NEMA Standard 11-14-1985.

4.5 VOLTAGE DEVIATION (REGULATION)

While the rectifier is being subjected to the alternating-current input conditions specified in 3.1 and 3.4, applicable frequency variations as specified in 3-6, and applicable load variations specified in 4.3, the direct-current output voltage shall be maintained as follows:

4.5.1 Float Voltage Deviation (Regulation)

When float charging a battery at a voltage between 2.15 and 2.35 volts per cell, the deviation, unless otherwise specified, shall not exceed $1 \pm \frac{1}{2}$ percent.

NEMA Standard 11-14-1985.

4.5.2 Equalize Voltage Deviation (Regulation)

When equalize charging a battery between 2.20 and 2.35 volts per cell, the deviation, unless otherwise specified, shall not exceed 2 ± 1 percent.

NEMA Standard 11-14-1985.

4.6 EFFECT OF TEMPERATURE CHANGE (ALL OTHER CONDITIONS CONSTANT)

The change of direct-current output voltage, resulting from the change of operating ambient temperature as specified in 7.1, shall not exceed ½ percent of the output voltage setting.

NEMA Standard 11-14-1985.

Copyright National Electrical Manufacturers Association
Provided by IHS under license with NEMA
No reproduction or networking permitted without license from IHS
Not for Resale

4.7 CURRENT LIMITING

The rectifier shall limit the direct-current output current to the value at which it may operate continuously while being subjected to the conditions of Section 3, with the connected battery at a voltage level of 1.75 to 2.35 volts per cell, unless otherwise specified. Under these conditions, the current shall not be less than 100 percent of rectifier nameplate rating. Such operation shall not cause the operation of any protective device or result in damage to the charger.

NEMA Standard 11-14-85

4.8 ABNORMAL LOAD CONDITIONS

The rectifier should be able to operate into a zero battery voltage without activating protective devices.

Authorized Engineering Information 11-14-1985.

If protective devices are activated when a rectifier operates into a zero battery voltage, this shall not result in any degradation of performance after operation has been restored, unless otherwise specified.

NEMA Standard 11-14-1985.

4.9 DYNAMIC RESPONSE

4.9.1 Load Change

Sudden changes in load current over the range of 20 to 100 or 100 to 20 percent percent of full load shall not result in output voltage beyond the range of 94 to 106 percent of voltage setting. No excursion of voltage shall result in activation of the overvoltage shutdown. The voltage shall return to, and remain, within the deviation limits specified in 4.5 in not more than 500 milliseconds.

NEMA Standard 11-14-1985.

4.9.2 Input Voltage Change

Sudden changes of up to 10 percent of rated input voltage shall not result in transient behavior greater than the limits specified in 4.9.1. The initial and final values shall be within the input voltage range shown in Table 3-1.

NEMA Standard 11-14-1985.

4.10 START-UP BEHAVIOR

Energizing the rectifier with a connected load of greater than 10 percent of rating shall not result in output voltage greater than 110 percent of the voltage setting, shall not activate the overvoltage shutdown, and shall stabilize to within the deviation limits specified in 4.5 within 10 seconds.

NEMA Standard 11-14-1985.

4.11 EFFECT OF VOLTAGE SURGES

When subjected to the transient conditions specified in 3.5, the rectifier shall continue to operate, and shall exhibit no component failure or degradation.

NEMA Standard 11-14-1985.

Copyright National Electrical Manufacturers Association
Provided by IHS under license with NEMA
No reproduction or networking permitted without license from IHS

Not for Resale

SECTION 5

NOISE CHARACTERISTICS

5.1 GENERAL

The noise characteristics, when measured in accordance with Section 11, shall meet the limits as defined in 5.2 through 5.5. The limits apply for all combinations of line voltage and frequency, output voltage, and load current within the normal steady-state operating limits defined in Sections 3 and 4. The limits shown shall apply unless otherwise specified by the user.

NEMA Standard 11-14-1985.

The maximum limits given in this paragraph have been shown, by experience, to be applicable to most communications-type loads. However, a given application may require lower values, or tolerate higher values.

Authorized Engineering Information 11-14-1985.

5.2 INPUT NOISE (CONDUCTED)

5.2.1 Weighted Noise

The weighted noise, resulting from the input current waveshape, shall be expressed in terms of maximum I•T product. The maximum I•T product of the input current shall not exceed 500 × (rated input current).

NEMA Standard 11-14-1985.

5.2.2 Unweighted Noise

Audio frequency unweighted noise, resulting from the input current, shall be expressed in terms of the product of input current and harmonic distortion. The maximum product of input rms current and harmonic distortion shall not exceed 0.5 × (rated input current).

NEMA Standard 11-14-1985.

5.3 OUTPUT NOISE (CONDUCTED)

5.3.1 Weighted Noise

The weighted noise, resulting from the output voltage waveshape, shall be expressed in terms of noise voltage, in units of dBrnc, at the terminals of a connected battery. The output noise voltage shall not exceed 32 dBrnc when the rectifier is connected to a battery of AH capacity numerically equal to four times the FLC of the rectifier.

NEMA Standard 11-14-1985.

5.3.2 Unweighted Noise

The unweighted noise, resulting from the outvoltage waveshape, shall be expressed in terms of noise voltage at the terminals of a connected battery. The output noise voltage shall not exceed 1.0 percent peak-to-peak of the nominal battery voltage or 200 millivolts peak-to-peak, whichever is greater, and 30 millivolts rms when the rectifier is connected to a battery of AH capacity numerically equal to four times the FLC of the rectifier.

NEMA Standard 11-14-1985.

5.4 AUDIBLE NOISE

Audible noise, resulting from operation of the rectifier, shall be expressed in terms of dB indicated on a sound level meter conforming to ANSI S1.4, and shall not exceed 65 dB (A-weighting) measured at any point 5 feet (152.3 centimeters) from any vertical surface of the rectifier.

NEMA Standard 11-14-1985.

5.5 RADIO FREQUENCY NOISE

Radio frequency noise, resulting from the input current and output voltage, shall be expressed in terms of microvolts per unit band width measured at the terminals of a line impedance stabilization network (LISN), and shall not exceed the limits shown in Figure 5-1.

NEMA Standard 11-14-1985.

Copyright National Electrical Manufacturers Association
Provided by IHS under license with NEMA
No reproduction or networking permitted without license from IHS

Not for Resale

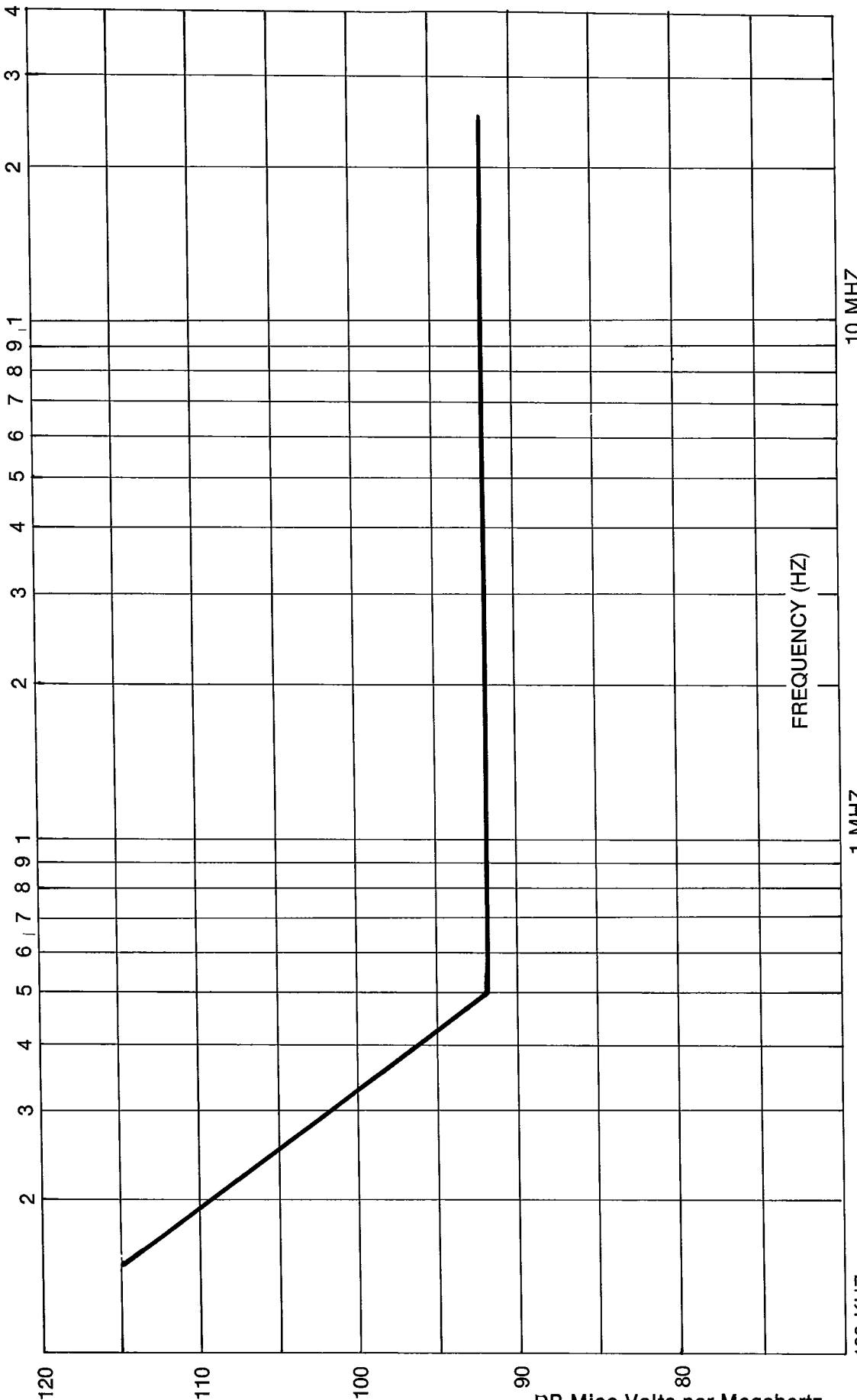

Figure 5-1
BROADBAND CONDUCTED INTERFERENCE LIMIT

Copyright National Electrical Manufacturers Association
Provided by IHS under license with NEMA
No reproduction or networking permitted without license from IHS

Not for Resale

SECTION 6

SAFETY

6.1 GENERAL

The protection of operating and service personnel from electrical and mechanical hazards is of prime importance. Design and manufacturing procedures which minimize such hazards shall be used when producing a product in accordance with this Standards Publication.

NEMA Standard 11-14-1985.

6.2 REQUIREMENTS

The rectifier shall meet the grounding requirements of ANSI/NFPA 70, the National Electrical Code.

NEMA Standard 11-14-1985.

6.3 GROUNDING

Equipment which is in accordance with this standard shall meet the following minimum grounding provisions:

6.3.1 Equipment Grounding

A grounding terminal shall be provided for grounding the enclosure and accessible dead metal parts of the equipment.

The grounding terminal shall be a wire binding screw with a green head that is hexagonal shaped, or slotted, or both; or a pressure connector that is clearly marked with G, GR, GND, GROUND, GROUNDING or the like. The grounding terminal shall be so located that it is not likely to be removed during normal servicing.

A lead intended solely as an equipment grounding conductor shall be green or green with one or more yellow stripes. No other lead will be identified in this manner.

NEMA Standard 11-14-1985.

6.3.2 Alternating-current Circuit Ground

A terminal for the grounded circuit conductor shall be made of, or plated with, a metal which is essentially white in color, or clearly identified in some other manner, such as a permanent label, and shall be clearly distinguished from other terminals.

A grounded circuit conductor shall be essentially white ornatural gray in color and be easily distinguished from otherleads.

Equipment intended for connection to supplies with grounded conductors and having single conductor or single pole disconnecting means (whether manual or automatic) such as a fuse, single pole circuit breaker, or single pole switch, shall have a terminal identified for connection to the grounded conductor. No fuse or single pole device shall be used in the grounded conductor.

NEMA Standard 11-14-1985.

6.3.3 Dead Metal Parts

All exposed dead-metal parts and all dead-metal parts that are accessible during any servicing (including maintenance and repair) shall be conductively connected to the equipment grounding terminal.

NEMA Standard 11-14-1985.

6.3.4 Live Metal Parts

Parts which are insulated from ground or dead-metal parts shall be secured in a manner to prevent movement if reduction of spacing below minimum values will occur.

NEMA Standard 11-14-1985.

6.4 LEAKAGE CURRENT

The leakage current limits specified in ANSI C101.1 shall apply to equipment covered by this Standards Publication.

NEMA Standard 11-14-1985.

6.5 DIELECTRIC REQUIREMENTS

Means shall be provided to insulate the direct-current output, the alternating-current source, and the dead-metal parts from each other.

The insulation of primary circuits to dead-metal parts and primary circuits to secondary circuits shall be capable of withstanding for 1 minute, without breaking down, the application of a 60-hertz, essentially sinusoidal potential, equal to 1000 volts plus twice the primary voltage. For secondary circuits operating at 50 volts nominal or less, the insulation shall be capable of withstanding 500 volts between these circuits and dead-metal parts.

For secondary circuits operating at more than 50 volts nominal, the insulation shall be capable of withstanding 1000 volts, plus twice the maximum rated secondary voltage between these circuits and dead-metal parts.

NEMA Standard 11-14-1985.

Copyright National Electrical Manufacturers Association
Provided by IHS under license with NEMA
No reproduction or networking permitted without license from IHS

Not for Resale

Section 7

ENVIRONMENTAL REQUIREMENTS

7.1 OPERATING TEMPERATURE

Rectifiers designed for natural or forced convection shall be capable of meeting all performance requirements when the inlet air temperature is in the range of 0° to 50°C (32° to 122°F). Within this range, the temperature shall not change at a rate exceeding 7.2°C (13°F) per hour.

NEMA Standard 11-14-1985.

If the rectifier is to be operated in an ambient temperature outside this range, the manufacturer should be consulted.

Authorized Engineering Information 11-14-1985.

7.2 STORAGE

The rectifier shall not be damaged by extended storage at any temperature between −40°C (−40°F) and 85°C (185°F).

NEMA Standard 11-14-1985.

The manufacturer should be consulted regarding maintenance procedures (if any) following storage periods greater than six months.

Authorized Engineering Information 11-14-1985.

7.3 ALTITUDE

Rectifiers conforming to this standard are intended for installation at altitudes not exceeding 1000 meters (3300 feet). For installation at higher altitude, the manufacturer should be consulted.

Authorized Engineering Information 11-14-1985.

7.4 HUMIDITY

The rectifier shall be capable of meeting performance standards in a humidity not to exceed 95 percent (without condensation).

NEMA Standard 11-14-1985.

7.5 VIBRATION

The rectifier, in its shipping container, shall be capable of withstanding vibration encountered in shipping without physical damage or degradation of the electrical performance.

NEMA Standard 11-14-1985.

7.6 SHOCK

The rectifier, in its shipping container, shall be capable of withstanding the shock involved when one edge of the container is dropped six inches (152.4 mm) while the opposite edge is resting on the ground, or a full drop of two inches (50.8 mm) on any surface without physical damage or degradation of the electrical performance.

NEMA Standard 11-14-1985.

7.7 UNUSUAL SERVICE CONDITIONS

Unusual service conditions may require specific design considerations and the following unusual service conditions should be brought to the attention of the manufacturer:

a. Exposure to damaging fumes.
b. Exposure to vapors of oil or other substances.
c. Exposure to excessive moisture.
d. Exposure to steam.
e. Exposure to weather or dripping water.
f. Exposure to salt air.
g. Exposure to excessive dust.
h. Exposure to abrasive dust.
i. Exposure to abnormal vibration, shocks, or tilting during transportation or operation.
j. Exposure to unusual transportation or storage conditions.
k. Exposure to unusual electromagnetic fields.
l. Operation at ambient temperature below 0°C (32°F) or above 50°C (122°F).
m. Operation at altitudes above 1000 meters (3300 feet).
n. Exposure to abnormal radiation.
o. Exposure to insects, vermin or fungus.
p. Operation with switching or negative resistance loads.

Authorized Engineering Information 11-14-1985.

Copyright National Electrical Manufacturers Association
Provided by IHS under license with NEMA
No reproduction or networking permitted without license from IHS
Not for Resale

Section 8

SUPERVISORY CONTROLS

8.1 SUPERVISORY CONTROLS

When supplied, the following supervisory controls shall perform as stated below:

8.1.1 Rectifier Failure Alarm

Isolated form "C" contacts for failure alarm indication shall be provided to indicate rectifier failure conditions; i.e., blown fuse, tripped circuit breaker, de-energized alternating-current input contactor, or overvoltage shutdown.

NEMA Standard 11-14-1985.

8.1.2 Low Direct-current Voltage Alarm

The low direct-current voltage alarm shall provide isolated form "C" contacts for alarm indication of direct-current output voltage below a present adjustable level. The minimum voltage adjustment range for pickup and dropout shall be 1.7 to 2.2 volts per cell times the number of series-connected cells for which the charger is intended. The operating voltage shall not vary by more than ½ percent over the rectifier ambient temperature range specified in 7.1. This alarm shall operate within ¼ percent of the adjusted value for a minimum of 6 months without adjustment.

NEMA Standard 11-14-1985.

8.1.3 High Direct-current Voltage Alarm

The high direct-current voltage alarm shall provide isolated form "C" contacts for alarm indication of a direct-current output voltage above a preset adjustable level. The minimum voltage adjustment range for pickup and dropout shall be 2.2 to 2.5 volts per cell times the number of series-connected cells for which the charger is intended. The operating voltage shall not vary by more than ½ percent over the rectifier ambient temperature range specified in 7.1. This alarm shall operate within ¼ percent of the adjusted value for a minimum of 6 months without adjustment.

NEMA Standard 11-14-1985.

8.1.4 High Direct-current Voltage Shutdown

The overvoltage shutdown shall produce a rectifier shutdown and lockout if the output voltage exceeds a preset value. The operating point of the overvoltage shutdown shall be adjustable from 2.2 to 2.5 volts per cell times the number of series-connected cells for which the rectifier is intended.

NEMA Standard 11-14-1985.

8.1.5 Selective High Direct-current Voltage Shutdown

The selective high direct-current voltage shutdown shall shut down the faulty rectifier in a system of parallel connected rectifiers. It shall shutdown and lockout only the rectifier producing an output voltage exceeding a preset value. The operation point adjustability shall be the same as specified in 8.1.3.

NEMA Standard 11-14-1985.

8.1.6 Low Direct-current Alarm

The low direct-current alarm shall provide isolated form "C" contacts for alarm indication when the output direct-current decreases to a value less than 2 percent of the rated full-load current. The low direct-current alarm shall be activated for currents less than 2 percent of full load current and shall be deactivated for currents greater than 5 percent of full-load current.

NEMA Standard 11-14-1985.

8.1.7 Alternating-current Power Failure Alarm

The alternating-current power failure alarm shall provide isolated form "C" contacts for alarm indication if the alternating-current power fails causing the input voltage to drop to a low value. It shall not operate if the rectifier fails or shuts down for other reasons. In three-phase rectifiers each phase must be monitored.

NEMA Standard 11-14-1985.

The alternating-current power failure alarm is not intended to operate at a precise voltage level but may operate at any voltage level below the alternating-current input operating range shown in Table 3-1.

Authorized Engineering Information 11-14-1985.

8.1.8 Low Alternating-current Voltage Alarm

The low alternating-current voltage alarm shall provide isolated form "C" contacts for alarm indications if the alternating-current input voltage drops below a preset level. The maximum difference between the activation and de-activation levels shall be 5 percent. The activation voltage shall not vary by more than 2 percent over the rectifiers ambient temperature range specified in 7.1. In three-phase rectifiers each phase must be monitored. The alarm shall not operate if the rectifier fails or shuts down for other reasons.

NEMA Standard 11-14-1985.

Copyright National Electrical Manufacturers Association
Provided by IHS under license with NEMA
No reproduction or networking permitted without license from IHS

Not for Resale

Section 9

MECHANICAL DESIGN REQUIREMENTS

9.1 GENERAL

The rectifier mechanical design requirements shall be in accordance with the safety requirements of Section 6 and the requirements of this Section 9.

NEMA Standard 11-14-1985.

9.2 MECHANICAL DESIGN CLASSIFICATIONS

The rectifier mechanical design classifications shall be as follows:

9.2.1 Ventilation Class 1

These rectifiers shall be designed for continuous duty with natural convection cooling. All paragraphs of this Section 9 apply, except for 9.10.2.

NEMA Standard 11-14-1985.

9.2.2 Ventilation Class 2

These rectifiers shall be designed for continuous duty using self-contained fans or cooling devices. All paragraphs of this Section 9 apply, except for 9.10.1.

NEMA Standard 11-14-1985.

9.3 CONTROL CIRCUIT ACCESS

Control and regulating circuit components shall be readily accessible and easily replaceable.

NEMA Standard 11-14-1985.

9.4 PLUG-IN CIRCUIT COMPONENTS

Plug-in circuit components shall have keys or other suitable provisions to prevent incorrect assembly.

NEMA Standard 11-14-1985.

9.5 MOUNTING

All rectifiers of an appropriate physical size shall be designed for wall, rack, or rack cabinet mounting; and shall meet the parameters specified in 9.5.1 through 9.5.4.

NEMA Standard 11-14-1985.

Adaptive designs permitting wall or rack mounting are preferred for smaller rectifiers. Rectifiers of a size inappropriate for wall, rack, or rack cabinet mounting, should be designed for floor mounting.

Authorized Engineering Information 11-14-1985.

The design for all rectifiers shall be such that side, top, or bottom access shall not be required for normal maintenance and operation.

NEMA Standard 11-14-1985.

9.5.1 Mounting Holes

Mounting holes of rectifier for rack or rack cabinet mounting shall be in accordance with Figure 9-1.

NEMA Standard 11-14-1985.

Closed slot mounting holes are preferred.

Authorized Engineering Information 11-14-1985.

Rectifier mounting must match sufficient holes as shown in Figure 9-3 to assure adequate support.

NEMA Standard 11-14-1985.

9.5.2 Mounting Hole Spacing

Preferred rack or rack cabinet hole spacing shall be in accordance with Figure 9-2. Clearance holes shall be 0.281 ± 0.003 inch. Threaded holes shall be for a No. 10 screw with 32 threads per inch, with a No. 12 screw with 24 threads per inch as an alternative. Tolerance between any two holes shall be ± 0.015 inch, with tolerance to be non-cumulative.

NEMA Standard 11-14-1985

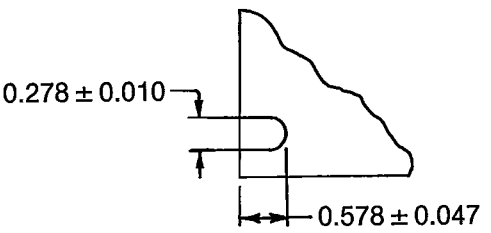

OPEN SLOT
Inches

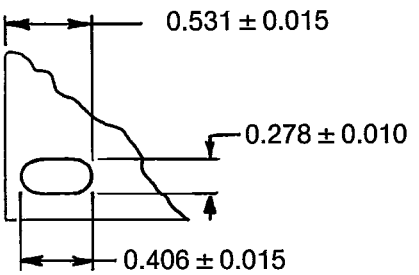

CLOSED SLOT
Inches

Figure 9-1
MOUNTING HOLES

Copyright National Electrical Manufacturers Association
Provided by IHS under license with NEMA
No reproduction or networking permitted without license from IHS
Not for Resale

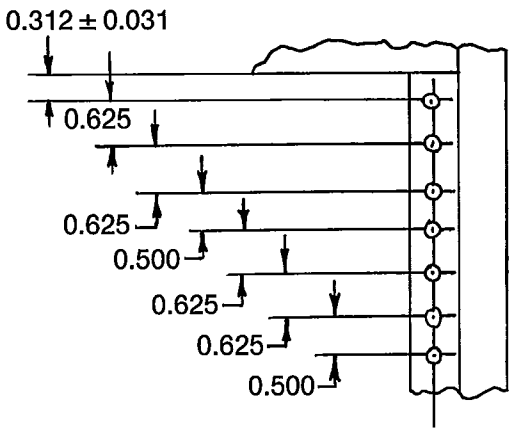

UNIVERSAL SPACING
Inches

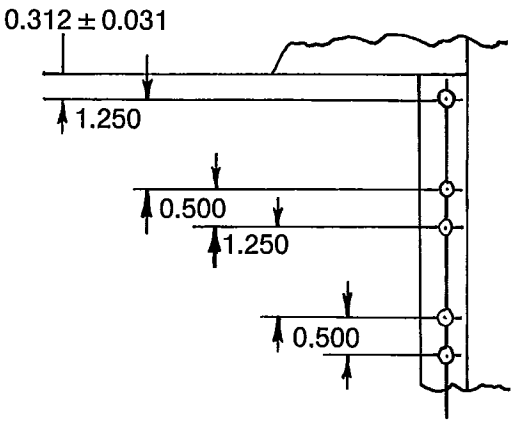

ALTERNATIVE SPACING
Inches

Figure 9-2
PREFERRED RACK
OR RACK CABINET HOLE SPACING
(TYPICAL TOP AND BOTTOM)

9.5.3 Mounting Hole Centers and Mounting Rack Inside Dimensions

Preferred rack or rack cabinet mounting hole centers and mounting rack inside dimensions shall be in accordance with sketch (b) of Figure 9-3. Tolerances shall be ±0.062 inches.

NEMA Standard 11-14-1985.

9.5.4 Rectifier Width

Preferred dimensions shall be in accordance with sketch (a) of Figure 9-3 for rack or rack cabinet mounting. Tolerance shall be ±0.062 inch.

NEMA Standard 11-14-1985.

9.6 NAMEPLATE MARKING

A nameplate shall be supplied and permanently attached to the rectifier with the following minimum information given on the nameplate:

Title:
Rated input voltage, rated input current, frequency, number of phases. Rated output voltage, rated full load output current. Manufacturer's name or symbol, and catalog number or equivalent.

NEMA Standard 11-14-1985.

9.7 MARKING

All electrical parts and control shall be identified with legible durable markings that conform to the designations shown on supporting documentation.

NEMA Standard 11-14-1985.

9.7.1 Parts

Each electrical part, including fuses and terminal boards, shall be identified by markings as immediately adjacent to the part as possible with its component designation marking. All fuse locations shall be marked with the proper type and rating.

NEMA Standard 11-14-1985.

	Width (Inches)	
Panel	B	C
19.000	17.750	18.312
23.000	21.750	22.312

Sketch (a)

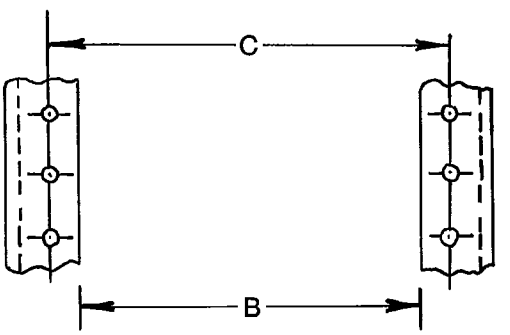

Sketch (b)

Figure 9-3
MOUNTING HOLE CENTERS,
MOUNTING RACK INSIDE DIMENSIONS,
AND RECTIFIER WIDTH DIMENSIONS

Copyright National Electrical Manufacturers Association
Provided by IHS under license with NEMA
No reproduction or networking permitted without license from IHS
Not for Resale

9.7.2 Controls

All operator accessible controls shall be identified with their function and status. Clockwise rotation or linear travel to the right or up direction shall increase the quantity, e.g., increase output voltage or current. Any variance to this operation shall be suitably marked.

NEMA Standard 11-14-1985.

9.8 TERMINAL AND LEAD MARKING

Both ends of each wire not otherwise easily identifiable, shall be clearly identified either by color coding or numbering. All components and subassembly terminals shall be numbered or be otherwise clearly identifiable. All external connecting terminals including ground, shall be appropriately marked or identified.

NEMA Standard 11-14-1985.

9.9 WIRING PRACTICES

Each bundle or harness shall be suitably supported along its length, particularly at points where a large portion of the bundle could tee off from the main stem. Harnesses to folding doors, swinging panels, and such, shall be given a reasonable length in which to twist (rather than be expected to make sharp right-angled bends) and shall be fixed at each end of twist.

Conductors shall be supported as required so that the vibration and shock requirements specified in 7.5 and 7.6 are met.

Insulation on wires and cable shall be compatible with environmental conditions.

NEMA Standard 11-14-1985.

9.10 VENTILATION

9.10.1 Ventilation Class 1 Rectifiers

These rectifiers shall be cooled by natural convection and radiation. The enclosure shall be provided with adequate openings (ventilation louvers, perforations, and such) to permit sufficient air movement to avoid heat stagnation and maintain allowable component temperatures. The rectifier will be installed and operated with the ventilating openings unobstructed.

NEMA Standard 11-14-1985.

9.10.2 Ventilation Class 2 Rectifiers

These rectifiers shall allow the use of self-contained fans or cooling devices.

NEMA Standard 11-14-1985.

The enclosure may be provided with openings (ventilation louvers, perforations, and such) to permit sufficient air movement to avoid heat stagnation and maintain allowable component temperatures.

Authorized Engineering Information 11-14-1985.

Failure of the fan or cooling device, blocked openings or filters shall not allow a hazardous or destructive condition to develop.

NEMA Standard 11-14-1985.

Under normal operating conditions, the temperature of front panels and operating controls shall not exceed the ambient temperature by more than 20 °C (36 °F). Other external surfaces and exposed parts which exceed the ambient temperature by more than 30 °C (54 °F) shall be marked with a suitable warning.

NEMA Standard 11-14-1985.

9.11 INSTALLATION CABLE ACCESS

Rectifiers shall have access provisions for input and output cables. Access provisions shall be sized to accommodate the required wires as specified in 10.2, item 6.

NEMA Standard 11-14-1985.

Copyright National Electrical Manufacturers Association
Provided by IHS under license with NEMA
No reproduction or networking permitted without license from IHS
Not for Resale

Section 10

COMPONENT REQUIREMENTS

10.1 GENERAL

All component parts of the rectifier shall be operated within their design ratings.

NEMA Standard 11-14-1985.

10.2 MINIMUM COMPONENTS

The rectifier shall contain the following minimum parts:

1. Semiconductor rectifying elements.
2. Transformer (two winding type) to electrically isolate the battery being charged from the alternating-current source.

   The temperature rise of transformer shall conform to the values shown in Table 10-1. Temperature rise limits apply for any combination of voltage and load and shall be measured in accordance with applicable NEMA Standards Publication PE 5-1985.

Table 10-1
TRANSFORMER TEMPERATURE RISE VALUES

Class of Insulation	Maximum Hottest Spot Temperature Rise Degrees C	°F	Maximum Hottest Spot Total Temperature Degrees C	°F
105	55	131	105	221
130	80	176	130	266
155	105	221	155	311
180	130	265	180	356
220	170	338	220	428

3. An alternating-current input power on-off control. A suitable alternating-current disconnect shall be provided external to the rectifier.
4. Output voltage adjustment control.
5. Enclosure in accordance with Section 9.
6. *Input and Output Terminal Lugs*—Alternating-current input and direct-current output lugs shall be of sufficient size to accommodate the power wiring specified by the ANSI/NFPA 70, *National Electrical Code,* for the highest input or output current respectively which could be required by the rectifier under any of the continuous operating conditions listed in this standard. In addition, the direct-current output terminal lugs shall accommodate the wire size required to limit the voltage drop between the rectifier and the battery or load to 1 volt, with 50 loop feet (i.e., 25 feet in each lead). The terminal lugs shall be located in a manner that the input and output cables shall not be required to make a bend with a radius less than that permitted by ANSI/NFPA 70, the *The National Electrical Code.*

NEMA Standard 11-14-1985.

10.3 ADDITIONAL COMPONENTS

If the rectifier contains the following additional parts, they shall meet the following requirements:

1. *Electrolytic Capacitor*—Electrolytic capacitors shall not be subjected to any steady-state, direct-current working voltage or rms ripple current exceeding 85 percent of the capacitor manufacturer's rating. The rms ripple current shall not be measured in a manner which itself does not reduce the value being measured.
2. *Meters*—Average responding type meters shall be used to monitor the output voltage and current.
3. *Other Magnetic Components*—When furnished, these components shall meet the temperature rise requirements specified in 10.2, item 2 (or Table 10-1).
4. *Relays*—All control and alarm relays shall be provided with dust covers.
5. *Transient Surge Suppression*—Suppressors (if required) shall be provided to protect the semiconductors from the transient overvoltage surges specified in 3.5.
6. *Overload and Fault Protective Device(s)*— Overload and fault protective device(s) shall be provided in both the input and output circuitry, if not provided external to the rectifier. The supply circuit shall be provided with adequate protection against short circuit and ground faults, so that the input protective device shall not be relied on for interrupting the maximum available short-circuit current of the power system.
7. *Adjustment Controls*—Adjustment controls shall be provided for independently adjusting the float and equalizing voltage levels and a means to change from the float mode to the equalize mode of operation and vice versa.

NEMA Standard 11-14-1985.

Copyright National Electrical Manufacturers Association
Provided by IHS under license with NEMA
No reproduction or networking permitted without license from IHS
Not for Resale

Section 11

TEST METHODS

11.1 DESIGN (TYPE) TESTS

Design tests are those made by the manufacturer on each design to establish performance characteristics and to demonstrate conformance with this standard. Once made, they need not necessarily be repeated on each unit unless the design is changed so as to modify performance. Design tests are given below.

Authorized Engineering Information 11-14-1985.

11.2 DIRECT-CURRENT OUTPUT TESTS

All direct-current output tests shall be conducted with the battery, rectifier, and load interconnected as shown in Figure 11-1. The output voltage shall be measured at the battery terminals with a direct-current average reading voltmeter. Tests shall be performed at an ambient operating temperature of 25°±5°C (77°±9°F) unless otherwise specified.

Length of each power conductor from rectifier to test battery shall be 25±0.5 feet (762±15.24 centimeters). Voltage drop at full-load current between the rectifier terminals and the battery terminals shall be between 0.9 and 1.1 volts (if required, resistance R shall be added).

Spacing of power leads shall be maintained at the minimum practical value (i.e., the leads shall be tied together).

Remote sensing leads, when provided, shall be connected to the battery terminals and all output tests measured at the battery terminals.

The load leads shall be connected directly to the battery terminals.

The battery ampere-hour rating shall be numerically equal to or less than four times the full-load current of the rectifier under test.

NEMA Standard 11-14-1985.

11.2.1 Voltage Adjust Test

The alternating-voltage input shall be adjusted to the rated value and the output current adjusted to half the rated value. The float and equalize voltage adjustments shall meet the requirements specified in 4.4.

NEMA Standard 11-14-1985.

11.2.2 Voltage Deviation (Regulation) Test

For each of the extreme values of float and equalize voltage given in 4.5, the voltage deviation shall be determined as follows:

1. The value of direct-current output voltage shall be recorded for maximum and minimum values of the alternating-voltage input range given in Table 3-1 for minimum and 100 percent load.
2. For rectifiers used for standby alternating-current supply application, the above test shall be repeated at 57 and 63 hertz.
3. The maximum and minimum values of direct-current voltage shall be used to calculate the percentage of voltage deviation.
4. Rectifiers categorized as partial float shall be tested at no-load to verify compliance with 4.3.2.

NEMA Standard 11-14-1985.

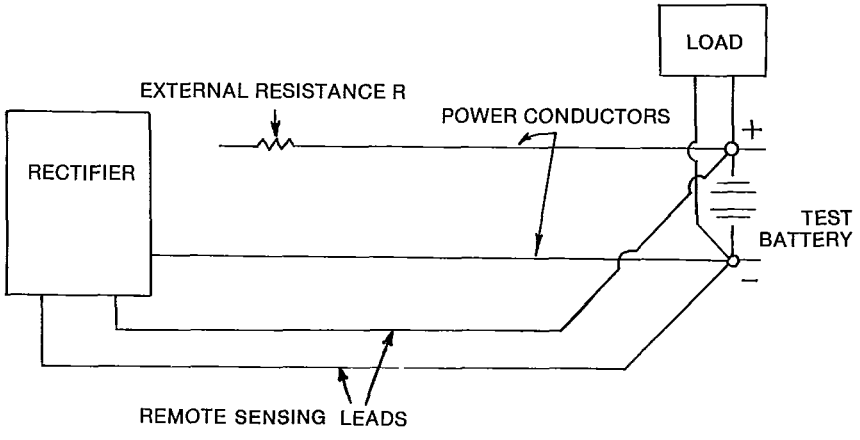

Figure 11-1
DIRECT-CURRENT OUTPUT TEST CIRCUIT

Copyright National Electrical Manufacturers Association
Provided by IHS under license with NEMA
No reproduction or networking permitted without license from IHS
Not for Resale

11.2.3 Temperature Change Test

With nominal alternating-current input voltage and frequency and 100 percent load, the temperature shall be changed over the limits specified in 7.1. The rectifier shall be allowed to thermally stabilize at each of at least four uniformly spaced temperature values and the direct-current voltage recorded. The inlet air temperature shall be measured with any suitable measuring device with an accuracy of ±5 °C (9 °F).

NEMA Standard 11-14-1985.

11.2.4 Current Limit Test

This test shall be conducted with the conditions as specified in 11.2 with the exception that the battery can be disconnected. With the rated alternating-current input voltage applied to the rectifier, the direct-current output voltage shall be adjusted to 2.35 volts per cell and the load adjusted to full-load current. The load shall then be increased until the direct-current output voltage decreases to 2.10 volts per cell. Sufficient measurements shall be taken to assure that protective devices will not operate and that damage will not occur to the rectifier. The measurements shall include the input alternating current and the output direct current. The alternating-voltage input shall be changed to minimum and maximum values specified in 3.1 and the measurements repeated. With the alternating-voltage input returned to nominal, the load shall be further increased until the direct-current output voltage decreases to 1.75 volts per cell and the above measurements repeated at the maximum, nominal, and minimum alternating-current input voltages. At each condition, sufficient time shall be allowed for readings to stabilize. Comparison of recorded values to manufacturer's ratings for components and protective devices shall comply with 4.7.

NEMA Standard 11-14-1985.

11.2.5 Dynamic Response

Measurements shall be made at the battery terminals with any suitable instrument.

1. Load Change—The dynamic change in the direct-current output voltage shall be measured at any fixed alternating-voltage input within the range specified in 3.1. The load current shall be switched in a time equal to or less than 2 milliseconds.

2. Alternating-voltage input Change—The dynamic change in direct-current output voltage shall be measured at any fixed load within the range specified in 4.3. The input voltage shall be changed 10 percent in a time equal to or less than 2 milliseconds.

3. Startup Behavior—The transient over-shoot shall meet the limits specified in 4.10.

NEMA Standard 11-14-1985.

11.2.6 Voltage Surge Test

This test shall be conducted with the rectifier operating at any load between 0 and 100 percent. The maximum rise time and pulse width are specified in 3.5.

NEMA Standard 11-14-1985.

A suggested method of applying the surge voltage is shown in Figure 11-2.

Authorized Engineering Information 11-14-1985.

An inductor is placed in series with each alternating-current input conductor of the rectifier and a capacitor charged to a suitable potential is switched across the input terminals to generate the prescribed surge waveform specified in 3.5. The inductors are selected to result in a source regulation of less than 5 percent from no load to full load on the charger output. The capacitor is selected to give the prescribed surge voltage and discharge time.

When testing three-phase rectifiers, the transient pulse shall be applied across each line conductor pair. Both positive and negative pulses shall be applied to each conductor pair with each being applied a minimum of three times, spaced at least 1 minute apart. The pulse waveform shall be measured with a wideband oscilloscope (DC-25 MHz).

The rectifier shall be checked for proper operation after each pulse to determine that no degradation of performance has occurred.

NEMA Standard 11-14-1985.

11.3 INPUT NOISE TESTS

The rectifier shall be tested, using a power source with a sufficiently low source impedance, so that the harmonic content of the input voltage is less than 5 percent when the rectifier is operating at full load.

NEMA Standard 11-14-1985.

11.3.1 Weighted Noise Tests

The rectifier shall be tested using the circuit shown in Figure 11-3 under all conditions of alternating-current input voltage and load current within limits specified in 3.1 and 4.3 and it shall be noted that:

$$N_1 - 20.2 = 20 \log \left(\frac{I \cdot T}{n} \right)$$

Where:

n = current transformer turns ratio.

N_1 = noise reading using the C-message weighting.

NEMA Standard 11-14-1985.

11.3.2 Unweighted Noise Tests

The rectifier shall be tested using the circuit of Figure 11- 4 under all conditions of alternating-current input voltage and load current within limits specified in 3.1 and 4.3.

NEMA Standard 11-14-1985.

Copyright National Electrical Manufacturers Association
Provided by IHS under license with NEMA
No reproduction or networking permitted without license from IHS

Not for Resale

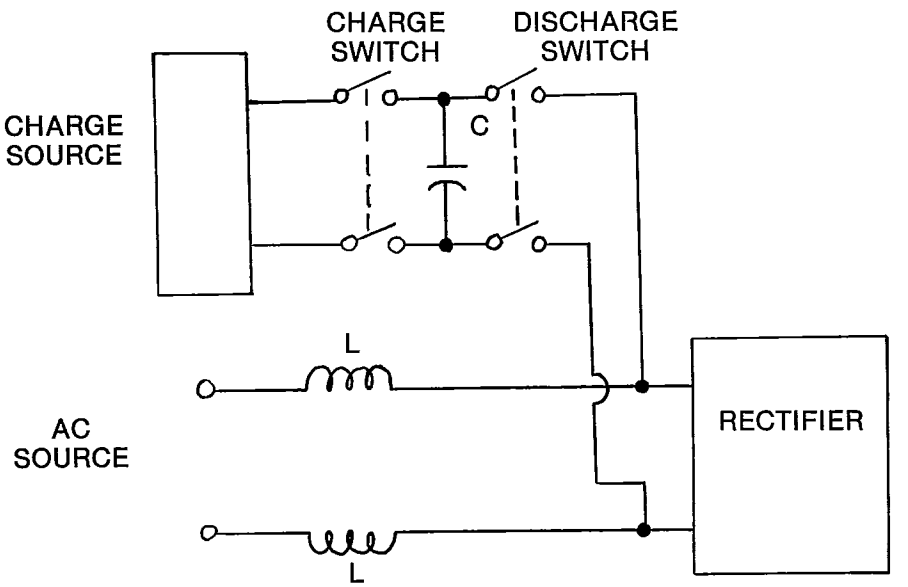

Figure 11-2
VOLTAGE SURGE TEST CIRCUIT

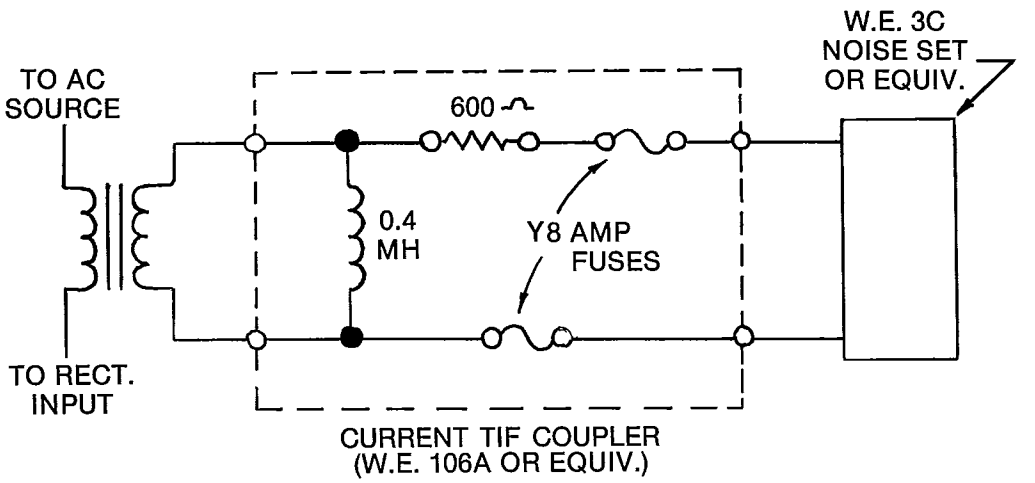

Figure 11-3
WEIGHTED NOISE TEST CIRCUIT

Copyright National Electrical Manufacturers Association
Provided by IHS under license with NEMA
No reproduction or networking permitted without license from IHS

Not for Resale

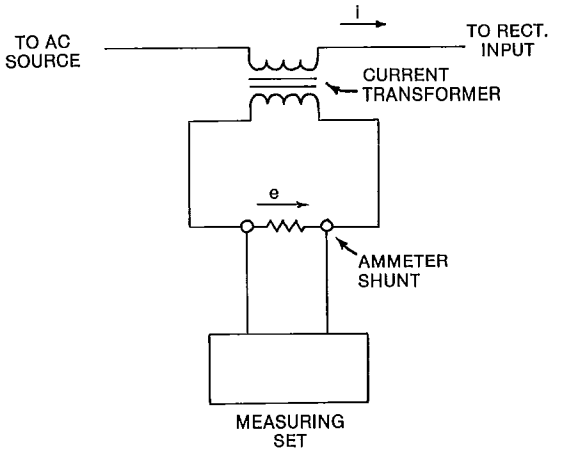

Figure 11-4
UNWEIGHTED NOISE TEST CIRCUIT

11.4 OUTPUT NOISE TESTS

The rectifier shall be tested using the circuit shown in Figure 11-1. The maximum AH capacity of the test battery shall be numerically equal to four times the FLC of the rectifier, and no correction factor shall be applied for test batteries smaller than the maximum. All measurements shall be made at the battery terminals.

NEMA Standard 11-14-1985.

11.4.1 Weighted Noise Tests

For weighted noise measurements, a Western Electric 3C or equivalent test set shall be used. C-message weighting shall be used. The rectifier shall be tested under all conditions of alternating-current input voltage and load current within limits specified in 3.1 and 4.3.

NEMA Standard 11-14-1985.

11.4.2 Unweighted Noise Tests

For unweighted noise measurements, the following instruments shall be used:

RMS Voltage—A true rms responding voltmeter with essentially flat response in the range 20 to 500 hertz.

Peak-to-peak—An oscilloscope with essentially flat response in the range DC-25 MHz.

The rectifier shall be tested under all conditions of alternating-current input voltage and load current within the limits specified in 3.1 and 4.3.

NEMA Standard 11-14-1985.

11.5 RADIO FREQUENCY NOISE TESTS

Measurement of radio frequency noise shall be made in accordance with ANSI C63.4.

NEMA Standard 11-14-1985.

11.6 AUDIBLE NOISE TESTS

Noise tests shall be conducted in an environment where the background (or ambient) noise level is at least 10 dB (A-weighting) below the acceptable limit when the rectifier is turned off. Tests and load ranges shall be in accordance with 3.1 and 4.3.

NEMA Standard 11-14-1985.

11.7 EFFICIENCY TEST

The efficiency shall be determined by measuring the total power at the alternating-current input terminals by means of wattmeters and by measuring the average values of the direct-current voltage and current at the rectifier output terminals by means of average responding instruments. The rectifier shall be temperature stabilized, at the operating conditions under which efficiency tests are to be performed, for a sufficient time to permit temperatures within the unit to reach their steady-state values. The efficiency shall be calculated in accordance with the following formula:

$$\text{Percent Efficiency} = \frac{\text{Avg. Output Current} \times \text{Avg. Output Voltage} \times 100}{\text{Input Watts}}$$

Unless otherwise stated, the input watts shall include the power requirements of all accessories.

NEMA Standard 11-14-1985.

Copyright National Electrical Manufacturers Association
Provided by IHS under license with NEMA
No reproduction or networking permitted without license from IHS
Not for Resale

11.8 POWER FACTOR/DISPLACEMENT FACTOR TESTS

The power factor for single-phase and three-phase rectifiers is calculated in accordance with the following formula:

$$\text{Percent Power Factor} = \frac{\text{Watts per Phase}}{\text{RMS Volt-amperes per Phase}} \times 100$$

For single-phase rectifiers the input watts shall be measured with a suitable wattmeter and the volt-amperes shall be calculated from measurements of the true rms input voltage and true rms input current using rms responding meters.

For a balanced three-phase source and load, the input power factor shall be calculated in accordance with the following formula:

$$\text{Percent Power Factor} = \frac{\text{Input Watts}}{\sqrt{3} \times \text{Phase Volts} \times \text{Line Current}} \times 100$$

Where—Phase volts and line current are rms values measured with rms responding meters.

The displacement factor is calculated in accordance with the following formula:

$$\text{Percent Displacement Factor} = \frac{\text{Input Watts}}{\sqrt{(\text{Input Watts})^2 + (\text{VAR})^2}} \times 100$$

Where—VAR is the total reactive volt-amperes.

In three-phase rectifiers, if power is measured by the following two-wattmeter method,

$$\text{Input Watts} = W_1 + W_2$$
$$\text{and, VAR} = \sqrt{3}\ (W_1 - W_2)$$

Where— W_2 is the smaller reading.

NEMA Standard 11-14-1985.

11.9 LEAKAGE CURRENT TESTS

Tests for leakage current shall be performed in accordance with ANSI C101.1.

NEMA Standard 11-14-1985.

11.10 SHORT-CIRCUIT PROTECTION AT THE OUTPUT

Rectifiers having output overload protection devices supplied within the rectifier shall be short-circuited at the output terminals. Other rectifiers shall be short-circuited through recommended protective devices. The short circuit shall be removed and protective devices replaced or reset and the rectifier turned on. The rectifier shall show no degradation of performance.

NEMA Standard 11-14-1985.

11.11 DIELECTRIC TEST

A test potential, as specified in 6.5, shall be applied between the following points:

1. Alternating-current input terminals to dead-metal parts
2. Alternating-current input terminals to direct-current output terminals
3. Direct-current output terminals to dead-metal parts.

NEMA Standard 11-14-1985.

For these tests, all semiconductors, capacitors, and sensitive control components may be short-circuited.

Authorized Engineering Information 11-14-1985.

In lieu of the alternating-current test potential, a direct-current potential equal to the $\sqrt{2}$ times the alternating-current value may be used.

Authorized Engineering Information 11-14-1985.

Any devices which disconnect the input or output terminals from the associated power circuits must be closed or shorted. These dielectric tests must be performed prior to any operational tests.

NEMA Standard 11-14-1985.

11.12 TEMPERATURE RISE TESTS

The rectifier shall be tested under all conditions of alternating voltage input, output voltage, and load current as specified in 3.1 and 4.3. The operating conditions, at which each test is performed, shall be maintained constant until all component temperature rises have been stabilized.

The temperature rise of components shall conform to the requirements specified in Section 10 and shall not exceed the values given in Table 10-1. Temperature rise of all other components shall not exceed the manufacturer's rating, when referred to an ambient operating temperature of 50 °C (122 °F). All measurements shall be made with any suitable temperature measuring device or technique (thermocouple method, resistance change method for transformer coils, or such).

NEMA Standard 11-14-1985.

Copyright National Electrical Manufacturers Association
Provided by IHS under license with NEMA
No reproduction or networking permitted without license from IHS
Not for Resale

Hottest spot temperatures may be measured directly or determined by calculation from measurements.

Authorized Engineering Information 11-14-1985.

11.13 PRODUCTION TESTS

Production tests are those tests which are made at the discretion of the manufacturer on some or all production units for the purpose of maintaining quality and performance.

As a minimum these tests should include the following:

1. Dielectric tests in accordance with 11.11. For production tests, 120 percent of the value of the test voltages shown in 6.5 may be applied for 1 second.
2. Operational tests.

Authorized Engineering Information 11-14-1985

--`,,,`,-`-`,,`,,`,`,,`---

Copyright National Electrical Manufacturers Association
Provided by IHS under license with NEMA
No reproduction or networking permitted without license from IHS

Not for Resale

SECTION 12

DOCUMENTATION

12.1 GENERAL

Instruction manuals and test reports shall be made available for all rectifiers.

NEMA Standard 11-14-1985.

12.1.1 Instruction Manuals

The manual shall include all the material shown in Table 12-1.

NEMA Standard 11-14-1985.

12.1.2 Test Reports

Certified copies of the design (type) and production tests shall be available.

NEMA Standard 11-16-1978

Table 12-1
INSTRUCTION MANUALS

Item No.	Description
1	Rectifier specification, as a minimum, shall include the following: (a) input and output voltage and current ratings, (b) ripple voltage, (c) output voltage regulation, (d) current limit setting, (e) input and output protection, (f) controls, (g) meters, (h) maximum ambient temperature, and (i) other customer-specified requirements.
2	Installation instructions
3	Circuit description
4	Schematic diagram
5	Operating instructions
6	Trouble shooting guide
7	Replaceable parts list

Copyright National Electrical Manufacturers Association
Provided by IHS under license with NEMA
No reproduction or networking permitted without license from IHS
Not for Resale

SECTION 13
APPLICATION DATA CHECKLIST

Section 13 is intended to aid the user in the selection of a rectifier for a communications application. It is not to be construed as an offering by any manufacturer for any type, class, or piece of equipment.

Authorized Engineering Information 11-14-1985.

1. DIRECT-CURRENT OUTPUT

Number of cells _____, equalize control; required _____.

Not required _____.

Current rating _____ amperes (full load).

Current limit setting _____.

Allowable noise:

Unweighted _____ (MVRMS, MV peak-to-peak or percent).
Weighted _____ dBrnc, other _____.

Parallel operation (describe) _____.

Required to share load _____.

2. ALTERNATING-CURRENT INPUT

Nominal system voltage _____ (see Table 3-1 for ranges).

Number of phases _____.

Frequency range: +0.1 hertz _____ or ±3 hertz _____.

Allowable noise:

Unweighted (harmonic) _____ percent full-load current.
Weighted (harmonic) _____ TIF.

3. ENVIRONMENT

Ventilation: Class 1 (convection) _____, Class 2 (forced) _____ unusual service conditions (specify from par. 6.07) _____.

Copyright National Electrical Manufacturers Association
Provided by IHS under license with NEMA
No reproduction or networking permitted without license from IHS
Not for Resale

4. PROTECTION (OTHER THAN NORMALLY PROVIDED BY THE MANUFACTURER)

Input: fuses _____, circuit breaker _____, contactor (specify) _____.

Output: fuses_____, circuit breaker_____, other (specify)_____.

Surge protection: ac _____,dc _____.

Transient protection: ac _____,dc _____.

5. METERING (OTHER THAN NORMALLY PROVIDED BY THE MANUFACTURER)

Output: voltmeter (describe) _____.
ammeter (describe) _____.

Input: (specify VM, AM, etc.) _____.
Other: (specify grnd. VM, load AM, etc. _____.

6. MOUNTING

Relay rack _____ and size _____, wall _____, floor _____, portable _____.

7. DIMENSIONS (ALLOWABLE)

Height _____, width _____, depth _____, cable entr. _____.

Clearance to other equipment (describe)_____.

8. FINISH (OTHER THAN NORMALLY PROVIDED BY THE MANUFACTURER)

Surface preparation _____.

Prime or base coat _____.

Finish coat(s) _____.

9. EQUALIZE CHARGE TIMER

0 to 24 hour_____0 to 72 hour _____.

Other, specify _____.

Copyright National Electrical Manufacturers Association
Provided by IHS under license with NEMA
No reproduction or networking permitted without license from IHS
Not for Resale

10. RELAYS (SPECIFY CONTACTS, TIME-DELAY, DIFFERENTIAL, MOUNTING, ETC.)

Low dc voltage alarm _____.

High dc voltage alarm _____.

High dc voltage shutdown _____.

Lockout _____.

Manual reset _____.

Low dc current alarm _____.

Rectifier failure alarm _____.

AC power failure alarm _____.

Low ac voltage alarm _____.

11. SELECTIVE HIGH DIRECT-CURRENT VOLTAGE SHUTDOWN

Selective high direct-current voltage shutdown _____.

12. GROUND DETECTION

Relay _____, voltmeter switch _____.

Lamps _____, voltmeter _____.

13. NOISE SUPPRESSION (OTHER THAN NORMALLY PROVIDED BY THE MANUFACTURER)

EMI (RFI) (specify limits) _____.

Audible (specify limits and test method) _____.

14. OPERATION WITHOUT BATTERY

Required for:

Continuous duty _____.

Intermittent (specify) _____.

Allowable ripple or noise (specify) _____.

Other factors (type of load, response time, etc.) _____.

Copyright National Electrical Manufacturers Association
Provided by IHS under license with NEMA
No reproduction or networking permitted without license from IHS
Not for Resale

15. LAMPS (OTHER THAN NORMALLY PROVIDED BY THE MANUFACTURER)

Function(s) _____.

Color Lens _____.

Other description _____.

16. AUDIBLE ALARM (SPECIFY FUNCTION)

Preferred type _____.

Level _____.

Control _____.

17. BATTERY FEEDBACK PREVENTION

Allowable level _____MA.

Type device (diode, relay, etc.) _____.

18. CONSTRUCTION (OTHER THAN NORMALLY PROVIDED BY THE MANUFACTURER)

Shock and vibration required _____.

Dripproof construction _____.

Fungus proofing _____.

Insect proofing _____.

Wire or cable (specify) _____.

Markers _____.

Unit or device marking, labels, etc. _____.

Testing (specify) _____.

Documentation (specify) _____.

Copyright National Electrical Manufacturers Association
Provided by IHS under license with NEMA
No reproduction or networking permitted without license from IHS
Not for Resale

NEMA PE*7 85 ■ 6470247 0505966 508 ■

NEMA STANDARDIZATION

The purpose of NEMA Standards, their classification and status are set forth in certain clauses of the NEMA Bylaws, which are quoted below:

Purpose of Standards

National Electrical Manufacturers Association Standards are adopted in the public interest and are designed to eliminate misunderstandings between the manufacturer and the purchaser and to assist the purchaser in selecting and obtaining the proper product for its particular need. Existence of a National Electrical Manufacturers Association Standard does not in any respect preclude any member or nonmember from manufacturing or selling products not conforming to the standard.

(Bylaw—Art. V, Sec. 1)

Definition of a Standard

A standard of the National Electrical Manufacturers Association defines a product, process or procedure with reference to one or more of the following: nomenclature, composition, construction, dimensions, tolerances, safety, operating characteristics, performance, rating, testing, and the service for which they are designed.

(Bylaw—Art. V, Sec. 2, Subsection A)

Dimensions

Where dimensions are given for interchangeability purposes, alternate dimensions satisfying the other provisions of the standards publication may be capable of otherwise equivalent performance.

(NEMA Policy Memorandum 84-2, dated June 7, 1984)

Classes of Standards

National Electrical Manufacturers Association Standards are of two classes:

1. NEMA Standard, which relates to a product commercially standardized and subject to repetitive manufacture, which standard has been approved by at least 90 percent of the members of the Subdivision eligible to vote thereon;
2. Suggested Standard for Future Design, which may not have been regularly applied to a commercial product, but which suggests a sound engineering approach to future development, which standard has been approved by at least two-thirds of the members of the Subdivision eligible to vote thereon.

(Bylaw—Art. V, Sec. 2, Subsection B)

Authorized Engineering Information

Authorized Engineering Information consists of explanatory data and other engineering information of an informative character not falling within the classification of NEMA Standard or Suggested Standard for Future Design.

(Bylaw—Art. V, Sec. 6, 1st Sentence)

Official Standards Proposal

An Official Standards Proposal is an official draft of a proposed standard which is formally recommended to an outside organization(s) for consideration, comment and/or approval.

(Bylaw—Art. V, Sec. 4, Subsection A)

Identification of Status

Standards in NEMA Standards Publications are identified in the foreword or following each standard as "NEMA Standard" or "Suggested Standard for Future Design." These indicate the status of the standard. These words are followed by a date which indicates when the standard was adopted in its present form by the Association.

The material identified as "Authorized Engineering Information" and "Official Standards Proposal" is designated similarly.

Copyright National Electrical Manufacturers Association
Provided by IHS under license with NEMA
No reproduction or networking permitted without license from IHS
Not for Resale

POWER ELECTRONICS SECTION

OF THE

NATIONAL ELECTRICAL MANUFACTURERS ASSOCIATION

MEMBER COMPANIES

Best Power Technology, Inc.
Necedah, WI 54646

Bicron Electronics Co.
Canaan, Ct 06018

C & D Batteries Division
An Allied Company
Plymouth Meeting, PA 19462

Cyberex Inc.
Mentor, OH 44060

Dual-Life, Inc.
Newton, CT 06470

McGraw-Edison Company
Edison Battery Products
Cooper Industries Division
Bloomfield, NY 07003

Emerson Electric Company
Industrial Controls Division
Santa Ana, CA 92702

Exide Electronics Corp.
Raleigh, NC 27658

General Electric Company
Power Deliver Division
King of Prussia, PA 19406

GNB Batteries, Inc.
Langhorne, PA 19047

Hobart Brothers Company
Troy, OH 45373

Integrated Power Systems Corp.
Sugarland, TX 77478

International Power Machines Corporation
Dallas, Tx 75243

La Marche Manufacturing Co.
Des Plaines, Il 60018

Liebert Corporation
Programmed Power Division
Fremont, CA 94534

Lorain Products - Reliance COMM/TEC
Div. of Reliance Electric Co.
Lorain, OH 44052

Pulskota Electric Co.
Worth, IL 60482

Power Conversioin Products, Inc.
Crystal Lake, IL 60014

Ratelco, Inc.
Seattle, WA 98109

SOLA Electric
Unit of General Signal Corporation
Elk Grove, Village, IL 60007

Topaz, Inc.
San Diego, CA 92123

Toshiba International Corporation
Houston, TX 77041

Triad Power Systems, LTD
Houston, TX 77041

Copyright National Electrical Manufacturers Association
Provided by IHS under license with NEMA
No reproduction or networking permitted without license from IHS
Not for Resale