9009279 0002599 537

STANDARDS PUBLICATION/NO. PE 1-1983

nema

Uninterruptible Power Systems

NEMA

NATIONAL ELECTRICAL MANUFACTURERS ASSOCIATION ■ 2101 L STREET, N.W., WASHINGTON, D.C. 20037

Copyright National Electrical Manufacturers Association
Provided by IHS under license with NEMA
No reproduction or networking permitted without license from IHS
Not for Resale

© 1984 by the National Electrical Manufacturers Association

Copyright National Electrical Manufacturers Association
Provided by IHS under license with NEMA
No reproduction or networking permitted without license from IHS

Not for Resale

TABLE OF CONTENTS

		Page
	FOREWORD	i
	SCOPE	i
Section 1	DEFINITIONS	1
Section 2	TYPES OF UNINTERRUPTIBLE POWER SYSTEMS (UPS)	4
	Introduction	4
	Single UPS Unit	4
	Parallel Configurations For Capacity	8
	Redundant UPS	8
Section 3	SERVICE CONDITIONS	15
	Introduction	15
	Usual Service Conditions (Excluding Batteries)	15
	Unusual Service Conditions	15
	Unusual Electrical Conditions	16
Section 4	RATED VALUES AND PERFORMANCE OF UPS	16
	General	16
	Values and Characteristics	16
Section 5	TESTING STANDARDS	18
	General	18
	Functional Unit Tests	18
	UPS Tests	18
	Test Specifications	19
	Test Measuring Methods for Input and Output	21
Section 6	SAFETY	22
	Installation, Operating and Maintenance Instructions	22
	Construction	22
	Precautionary Labeling	23
Appendix A		
	Section 1. SCOPE	25
	Section 2. OBJECT	25
	Section 3. TERMS AND DEFINITIONS	25
Appendix B	APPLICATION DATA FORM	39
	General	39
	AC Input Voltage	39
	Type of UPS (Application)	39
	Types of Loads to be Operated from UPS	39
	UPS Output	39
	UPS Input	40
	Battery	40
	General Requirements and Special Service Conditions	40

Copyright National Electrical Manufacturers Association
Provided by IHS under license with NEMA
No reproduction or networking permitted without license from IHS
Not for Resale

TABLE OF CONTENTS (Contd.)

Page

List of Illustrations

Figures 2-1 Single UPS Unit Consisting of Rectifier/Charger, Inverter and Battery 4

2-2 Simplified Symbol for UPS Unit 5

2-3 Single UPS Unit Consisting of Rectifier, Inverter, Battery, and Separate Charger 5

2-4 Single UPS Unit With Bypass and Transfer Switch 6

2-5 Parallel UPS 6

2-6 Parallel UPS With Common DC Link (Single Battery) 7

2-7 Partial Parallel UPS 7

2-8 Parallel UPS With Bypass and Transfer Switch 9

2-9 Parallel Redundant UPS 9

2-10 Parallel Redundant UPS With Common DC Link (Single Battery) 10

2-11 Partial Parallel Redundant UPS 11

2-12 Parallel Redundant UPS With Bypass and Transfer Switch 12

2-13 Standby Redundant Units With Transfer Switch 13

2-14 Standby Redundance UPS With Common DC Link (Single Battery) and Transfer Switch 13

2-15 Standby Redundant UPS With Bypass and Transfer Switch 14

Copyright National Electrical Manufacturers Association
Provided by IHS under license with NEMA
No reproduction or networking permitted without license from IHS
Not for Resale

Foreword

User needs have been considered throughout the development and revision of these standards.

The Power Electronics Section of NEMA, through its members, has worked (and continues to work) closely with such organizations as the American Society for Testing and Materials (ASTM), the Institute of Electrical and Electronics Engineers (IEEE), and Power Systems Support Committee of the Industrial Power Systems Department.

The purpose of this publication is to provide manufacturers and users with definitions, provisions for construction, ratings, a testing schedule, specification outline, and safety considerations of uninterruptible power systems.

Existence of a National Electrical Manufacturers Association standard does not in any respect preclude any member or nonmember from manufacturing or selling products not conforming to the standard.

The efforts of the working members of the Uninterruptible Power System Committee was heightened because of the valuable and appreciated user input from the Government representatives from Social Security Administration, and Department of the Navy, Washington Navy Yard. Appropriate government agencies, Underwriters Laboratories Inc., and others will be consulted for any changes necessary to keep them up to date with advancing technology. Proposed or recommended revisions should be submitted to:

Managing, Engineering Department
National Electrical Manufacturers Association
2101 L Street, N.W.
Washington, D.C. 20037

Scope

This Standards Publication covers Uninterruptible Power System (UPS) as it applies to semiconductor ac to ac converter systems with a dedicated dc electrical energy storage capability. The primary function of the UPS covered by this technical standard is to provide quality and continuity of an alternating current power source.

The UPS standard is intended to define a complete uninterruptible power system regarding its overall performance and safety and not individual sub-system functional units.

Copyright National Electrical Manufacturers Association
Provided by IHS under license with NEMA
No reproduction or networking permitted without license from IHS
Not for Resale

UNINTERRUPTIBLE POWER SYSTEMS

Section 1
DEFINITIONS*

Ambient Temperature
The temperature of the medium such as air or liquid into which the heat of the UPS is dissipated.

*Apparent Power**
The product of the root-mean-square current and the root-mean-square voltage.

Battery
A rechargeable electrochemical energy storage device that when discharged, produces direct-current electrical energy from a chemical reaction and can be recharged by reversing the chemical reaction with direct-current electrical energy.

Battery Charger
A device for changing alternating-current power to direct-current power for the purpose of charging a battery.

*Burn-in**
The operation of units or systems prior to their ultimate application intended to stabilize their characteristics and to identify early failures.

Bypass
A power path around one or more functional units of a UPS.

Bypass Power
Alternating-current power supplied from an ac input to the ac output via a bypass.

Commutation
The transfer of current between various paths of a circuit.

Continuity of Load Power
The availability of load power within the limits specified for the load.

Current Limit
The function that maintains a current within its prescribed value.

Deviation
The difference between the actual value of a quantity and the ideal or desired values.

DC Link
The direct-current power interconnection between rectifier or rectifier/charger and inverter functional units.

Dielectric
An insulating material that is resistant to electric current flow.

*Dielectric Tests**
Tests which consist of the application of a voltage higher than the rated voltage for a specified time to verify the dielectric withstand strength of insulation materials and spacing.

Dielectric Withstand Strength
The specified voltage or potential gradient below which a dielectric material will continue to resist electrical current flow.

Displacement Factor
The displacement component of power factor; the ratio of the real power of the fundamental wave to the apparent power of the fundamental wave.

*Efficiency**
The ratio of output power to input power expressed in percent.

Electromagnetic Interference (EMI)
Unwanted radiated or conducted electric noise, or both.

Electronic Power Converter
An electronic device for changing power in one of the following ways:
AC/DC power converters
DC/AC power converters
AC/AC power converters
DC/DC power converters

NOTE: Definitions marked with an asterisk(s) are identical to those contained in the IEEE Standard Dictionary of Electrical and Electronics Terms, ANSI/IEEE Std 100-1977. NEMA has obtained reprint permission from IEEE.

Copyright National Electrical Manufacturers Association
Provided by IHS under license with NEMA
No reproduction or networking permitted without license from IHS
Not for Resale

as used in such applications as:

Cathodic protection
Communication battery chargers
Communication power supplies
Computer power systems
Electric traction converter substations
Electric utility battery chargers
Electrochemical Systems
Frequency converters
General purpose industrial power supplies
High Voltage DC Systems
Induction and dielectric heater power supplies
Laboratory power supplies
Mining rectifiers
Photo-voltaic power supplies
Uninterruptible power systems
Static Var Systems

Electronic Power Switch
An electronic device which can be controlled to interconnect power circuits.

Energy Storage System
A system consisting of single or multiple devices designed to provide the required stored energy time.

Failure
The termination of the ability to perform a required function.

Fault Current Availability
The current flow that can flow as result of a zero impedance fault.

Frequency Modulation
The cyclic or random dynamic variation, or both, of instantaneous frequency about a mean frequency during steady-state electric system operation.

Frequency Tolerance
A deviation from a standard frequency often expressed in percent.

Harmonic
An alternating voltage or current wave having a frequency that is an integral multiple of the fundamental frequency.

Harmonic Distortion
Distortion characterized by the appearances of harmonics in addition to other than the fundamental component.

Input
Electrical power in the form of alternating current (ac) or direct current (dc) supplied to the UPS and bypass.

Input Impedance
The impedance at the input terminals of the UPS with the UPS disconnected.

Inrush
A current higher than its steady state value drawn by a device when energized or activated.

Inverter
An electronic converter used to convert direct current to alternating current.

Load
A device or devices which receives power from the ac output of the UPS.

Load Sharing
The simultaneous supplying of power to a load from two or more sources.

Load Transfer Time
The time required for the transfer of the load from one power source to another.

Nominal Value
The value used to designate or identify a component, device, equipment or parameter.

Output Current
The rms current (unless otherwise specified for a particular load) from the output terminals

Output Impedance
The impedance presented by the UPS output terminals to a load.

Output Power
The power delivered by a UPS to the load.

Output Voltage
The rms voltage (unless otherwise specified for a particular load) between the output terminals.

Periodic Output Voltage Modulation
The cyclic or random dynamic variation or both of instantaneous voltage about a mean voltage during steady state operation.

Phase Angle
The angle (usually expressed in electrical degrees) between reference points on one or more ac wave forms.

*Power**
The time rate of transferring or transforming energy.

Copyright National Electrical Manufacturers Association
Provided by IHS under license with NEMA
No reproduction or networking permitted without license from IHS
Not for Resale

Power Factor
The ratio of the total real power to the apparent power.

Prime Power
The power normally continuously available which is usually supplied by electrical utility company but sometimes by the user's own generation.

Pulse
A quantity which departs from a first nominal value attains a second nominal state and ultimately returns to the first nominal state.

Rating
A value, assigned by a manufacturer, for a specified parameter.

Recovery Time
The time interval between a change in a parameter and when the stabilized value of the parameter returns to and stays within the steady state tolerance.

Redundancy
The existence of more than one means for performing a given function.

Redundant
A function that is performed by more than one means.

Restored Energy Time
The time required by the energy storage means of the UPS to be charged to provide a second rated stored energy time after providing rated stored energy time.

Short-circuit Output Current
The current which flows from the UPS into zero impedance load.

Standby Power
The power intended to replace prime power in case of prime power failure.

Step Load
The instantaneous addition or removal of electrical loads to a power source.

Stored Energy Time
The minimum time that the UPS will provide continuity of load power (under specified service conditions starting with a fully charged energy storage means) in the absence of ac input power.

Synchronization
A means by which to achieve the state of synchronism. (The state where ac systems, operate at the same frequency and where the phase-angle displacements between voltages are constant.)

Total Harmonic Distortion (THD)
The ratio of the root-mean-square (rms) value of all the harmonics to the root-mean-square (rms) value of the fundamental usually expressed in percent.

*Tolerance**
The total permissible variation of a quantity from a designated value.

Transfer Switch
A switch used to transfer a load from one power source to another.

Transient
That part of the variation, which ultimately disappears, in a quantity during transition from one steady-state operating condition to another.

Uninterruptible Power Systems (UPS)
An UPS is a device which provides quality and continuity of an ac power source. All UPS shall maintain some specified degree of continuity of load power for a specified stored energy time upon *AC* input failure.

UPS Switch
A switch (electronic or mechanical, depending on required continuity of power) used to connect, interrupt, isolate, or transfer power flow within a UPS.

Variation
The change in the value of a quantity from its mean or typical value.

Walk-in
A controlled power increase by the UPS from the ac input into the UPS.

NEMA Standard 11-3-1983.

Copyright National Electrical Manufacturers Association
Provided by IHS under license with NEMA
No reproduction or networking permitted without license from IHS
Not for Resale

Section 2
TYPES OF UNINTERRUPTIBLE POWER SYSTEMS (UPS)

2.1 INTRODUCTION

An UPS is a device whose primary function is to provide quality and continuity of an ac power source.

All UPS shall maintain some specified degree of continuity of load power for a specified stored energy time upon ac input failure. Various configurations of UPS units are used to achieve the specified degree of continuity of load power.

The following are typical configurations of Uninterruptible Power Systems (UPS).

Authorized Engineering Information 11-3-1983.

2.2 SINGLE UPS UNIT

A single UPS unit is the simplest configuration consisting of the following functions; a rectifier/charger, an inverter and a battery.[1] These functional units shall be dedicated to the UPS unit.

The configuration, is shown in Figure 2-1, and simplified in Figure 2-2. Other possible configurations of UPS units are described in 2.2.1 and 2.2.2.

NEMA Standard 11-3-1983.

[1] Batteries are a common dc electrical energy storage means used with UPS and will be used throughout this standard. Other dc electrical energy storage means can be used.

Authorized Engineering Information 11-3-1983.

2.2.1 Single UPS unit With Rectifier/Charger, Inverter and Battery

The inverter shall be characterized by its ability to supply the power to the load and shall take its power from either the ac input via the rectifier/charger or from the battery.

When the ac input fails, the battery shall provide energy to the inverter to maintain a continuity of load power. The capacity of the battery determines the length of time the system can operate without an ac input supply.

NEMA Standard 11-3-1983.

Frequencies, number of phase and voltage levels on input and output can be different.

Authorized Engineering Information 11-3-1983.

2.2.2 Single UPS unit With Separate Battery Charger

In place of a rectifier/charger, a separate rectifier and battery charger shall be permitted. This configuration is shown in Figure 2-3. The rectifier shall provide load power to the inverter. The battery

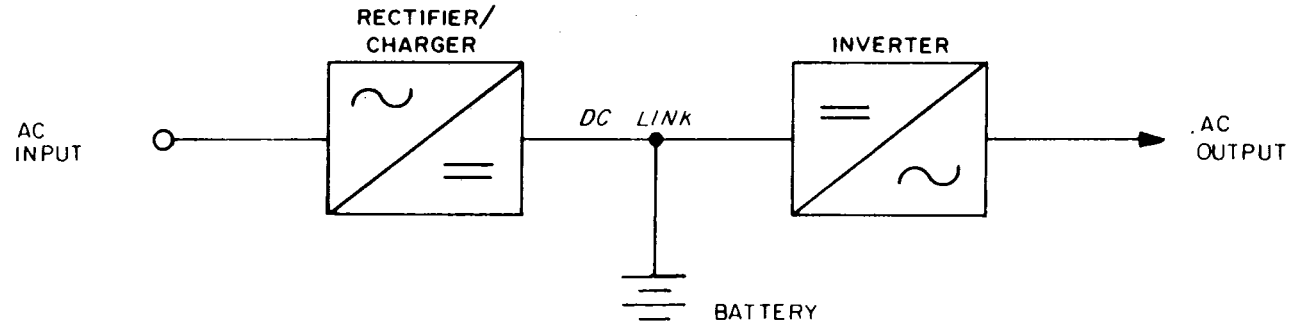

Figure 2-1
SINGLE UPS UNIT CONSISTING OF RECTIFIER/CHARGER, INVERTER AND BATTERY

Copyright National Electrical Manufacturers Association
Provided by IHS under license with NEMA
No reproduction or networking permitted without license from IHS
Not for Resale

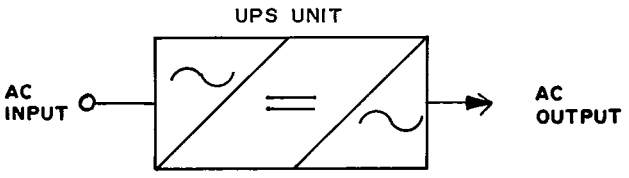

Figure 2-2
SIMPLIFIED SYMBOL FOR UPS UNIT

charger shall be controlled to recharge and maintain the battery in a charged condition. A blocking device (diode, thyristor, or switch) shall be used between the battery and the dc link. This configuration shall be functionally considered a single UPS unit, as represented in Figure 2-2.

NEMA Standard 11-3-1983.

2.2.3 Single UPS unit With Combined Battery Charger

A combination rectifier, charger, battery, and or inverter shall be permitted. This configuration shall be equivalent to a single UPS unit and is shown in Figure 2-2.

A single UPS unit, with the addition of a bypass and transfer switch is shown in Figure 2-4. This configuration shall operate with either the UPS unit, or the bypass, as the primary source of power. The electrical characteristics of the bypass shall be compatible with the UPS ac output.

NEMA Standard 11-3-1983.

2.2.4 UPS unit Primary

In the UPS unit-primary mode, the primary state of the transfer switch selects the UPS unit to power the load. The alternate state of the transfer switch selects the bypass.

Authorized Engineering Information 11-3-1983.

Copyright National Electrical Manufacturers Association
Provided by IHS under license with NEMA
No reproduction or networking permitted without license from IHS
Not for Resale

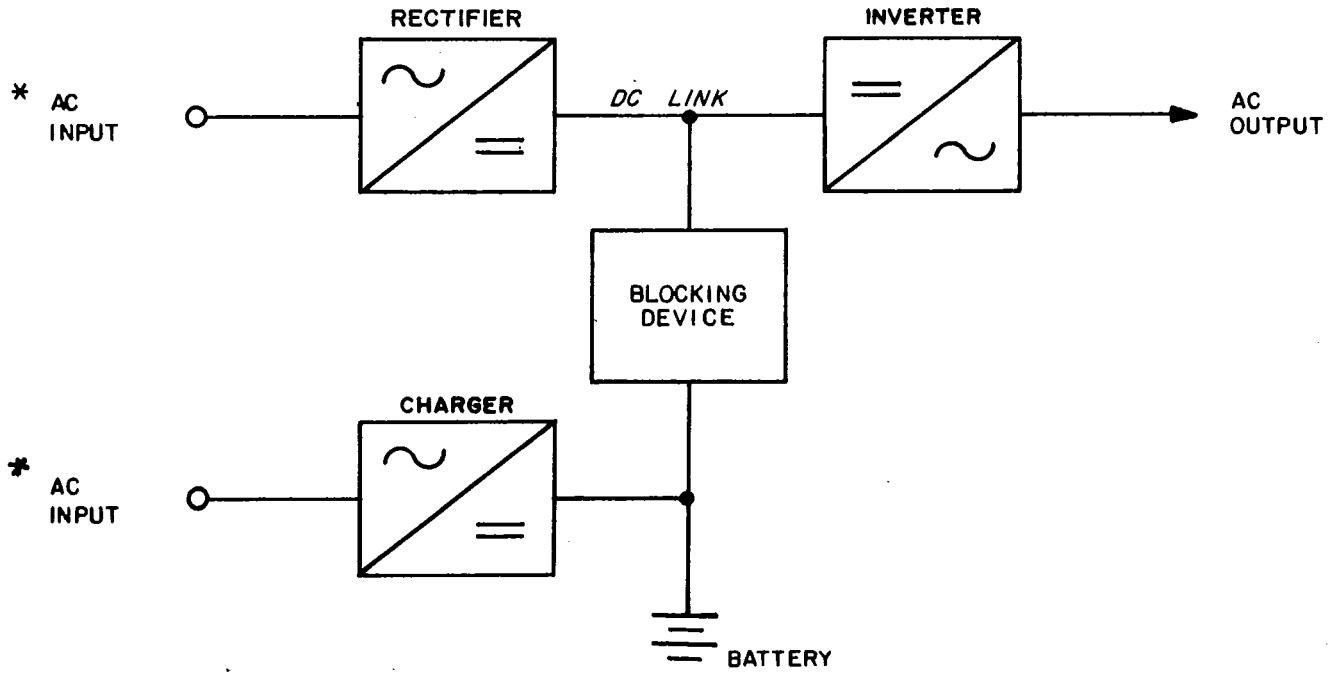

Figure 2-3
SINGLE UPS UNIT CONSISTING OF RECTIFIER, INVERTER BATTERY AND SEPARATE CHARGER

Copyright National Electrical Manufacturers Association
Provided by IHS under license with NEMA
No reproduction or networking permitted without license from IHS
Not for Resale

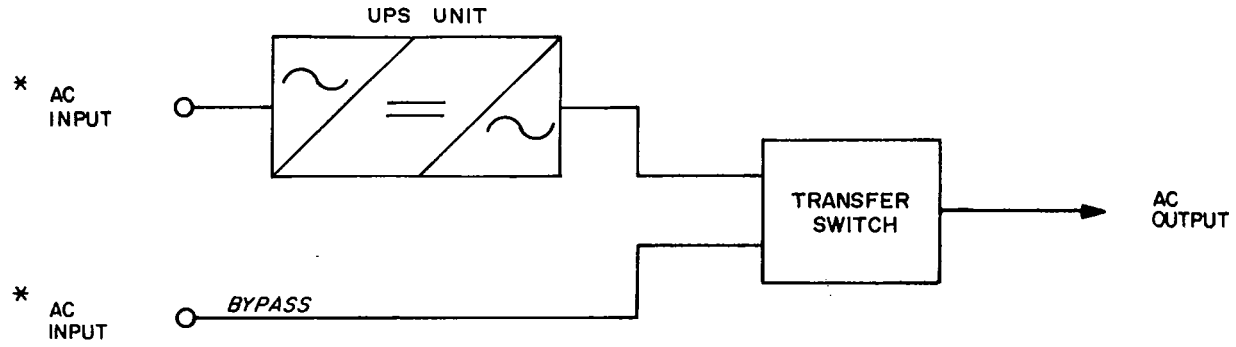

Figure 2-4
SINGLE UPS WITH BYPASS AND TRANSFER SWITCH

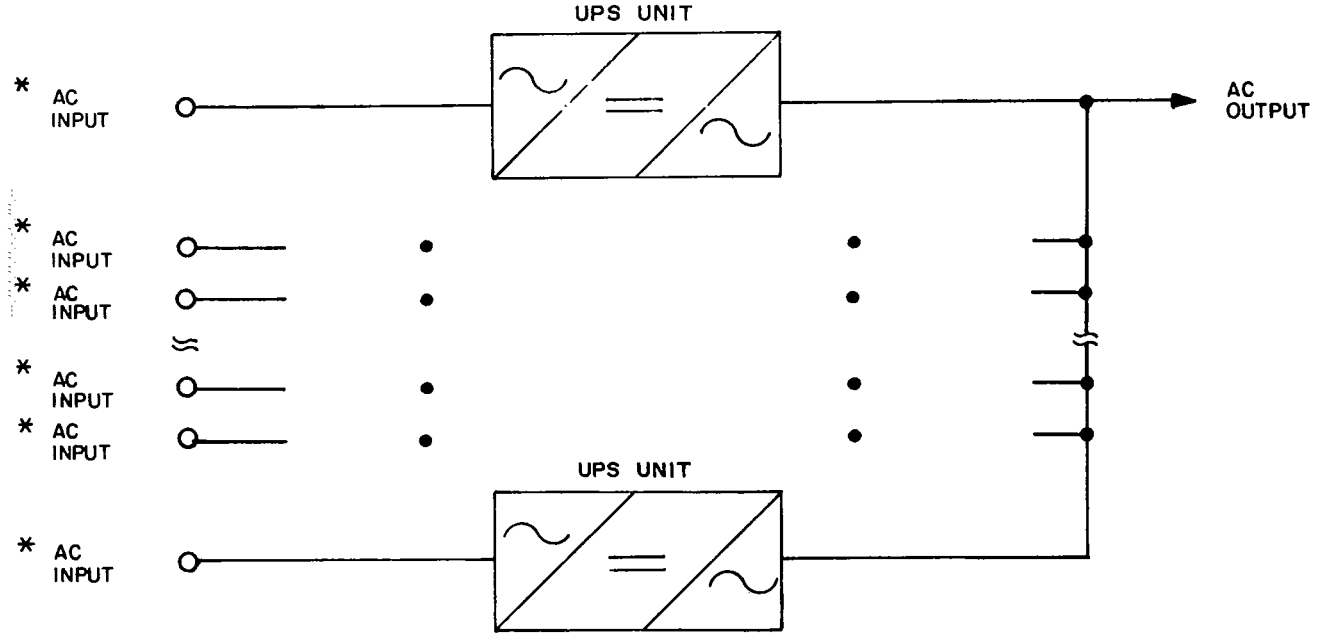

Figure 2-5
PARALLEL UPS

Copyright National Electrical Manufacturers Association
Provided by IHS under license with NEMA
No reproduction or networking permitted without license from IHS
Not for Resale

2.2.4.1 Bypass Primary

In the bypass primary load, the primary state of the transfer switch selects the bypass to power the load. The alternate state of the bypass switch selects the UPS unit.

Authorized Engineering Information 11-3-1983.

2.3 PARALLEL CONFIGURATIONS FOR CAPACITY

If more power is required, parallel UPS units shall be used and the system shall be treated as one single UPS. The ac output of the individual UPS units shall be connected to a common point.

NEMA Standard 11-3-1983.

2.3.1 Parallel UPS

Parallel UPS with individual battery for each UPS unit are shown in Figure 2.5.

Authorized Engineering Information 11-3-1983.

2.3.2 Parallel UPS With Single Battery

All of the UPS units paralleled shall have their dc links connected to a single battery. This configuration is shown in Figure 2-6.

NEMA Standard 11-3-1983.

2.3.3 Partial Parallel UPS

A partial parallel UPS shall be a UPS unit which consists of an unequal combination of one or more inverters and one or more rectifier/charger with a common dc link, and battery. An example of partial parallel UPS is shown in Figure 2-7.

NEMA Standard 11-3-1983.

2.3.4 Parallel UPS With Bypass and Transfer Switch

The UPS configurations of Figures 2-5, 2-6, and 2-7 operate as a single UPS. The system configuration shall be functionally equivalent to Figure 2-4 and is shown in Figure 2-8. The provisions of 2.2.4 shall apply.

NEMA Standard 11-3-1983.

2.4 REDUNDANT UPS

The need for system redundancy is dependent upon the load requirement.

Authorized Engineering Information 11-3-1983.

2.4.1 Parallel Configurations for Redundant UPS

There are various levels of redundancy which can be achieved by paralleling. The system redundancy, is dependent upon the load requirements.

Authorized Engineering Information 11-3-1983.

2.4.1.1 Parallel Redundant UPS

The redundant UPS configuration as shown in Figure 2-9 shall be characterized by a number of parallel UPS units supplying the load current.

If one UPS unit is disconnected from the system, the remaining UPS unit(s) shall maintain the continuity of load power. If one UPS unit fails, it shall be isolated by the UPS switch function to prevent it from interfering with the other UPS unit(s) in order to maintain the continuity of load power.

NEMA Standard 11-3-1983.

2.4.1.2 Parallel Redundant UPS With Common DC Link (Single Battery)

The parallel redundant UPS configuration with single battery is shown in Figure 2-10 and is characterized by a number of parallel rectifier and inverter functional units supplying the load current. If one rectifier/charger on inverter functional unit is disconnected from the system, the remaining functional units shall maintain continuity of load power.

If one functional unit fails it shall be isolated from interfering with the other functional units in order to maintain continuity of load power.

NEMA Standard 11-3-1983.

2.4.1.3 Partial Parallel Redundant UPS

The partial parallel redundant UPS is shown in Figure 2-11 and is characterized by an unequal combination of two or more rectifiers/chargers or inverter with a single battery.

If one rectifier/charger on inverter functional unit is disconnected from the system, the remaining functional units shall maintain continuity of load power.

If one functional unit fails it shall be isolated from interfering with the other functional units in order to maintain continuity of load power.

NEMA Standard 11-3-1983.

Copyright National Electrical Manufacturers Association
Provided by IHS under license with NEMA
No reproduction or networking permitted without license from IHS
Not for Resale

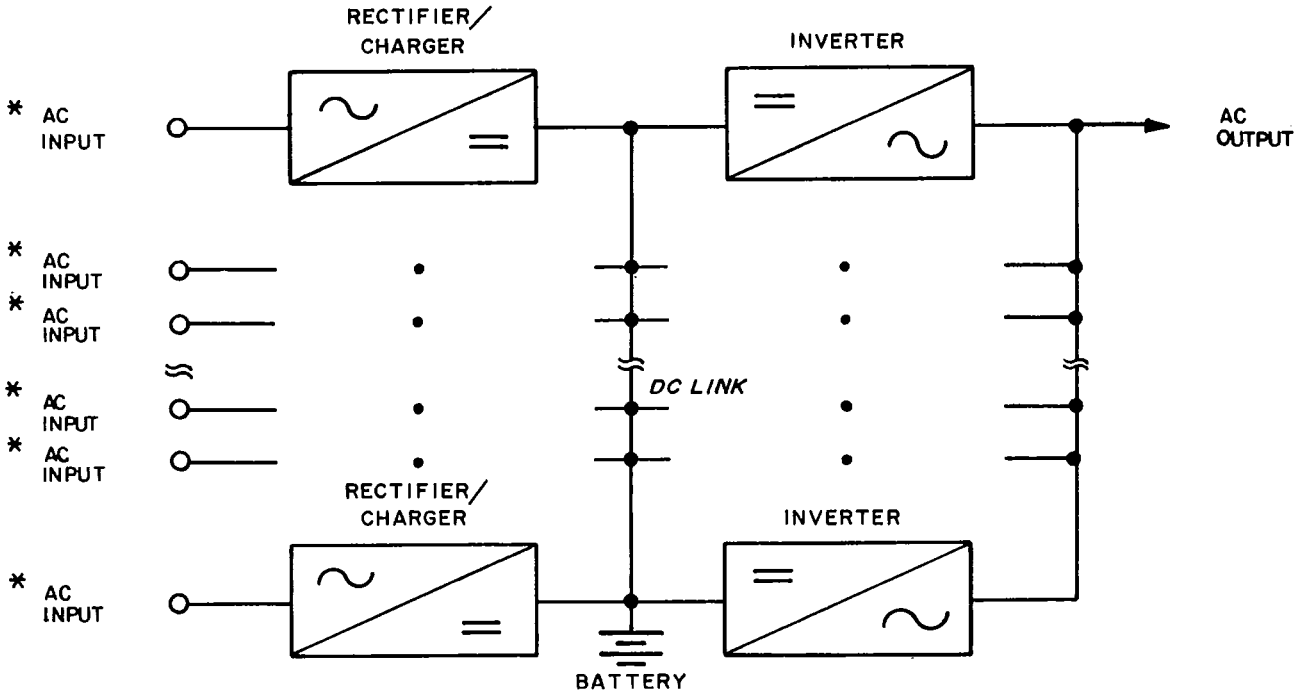

Figure 2-6
PARALLEL UPS WITH COMMON DC LINK (SINGLE BATTERY)

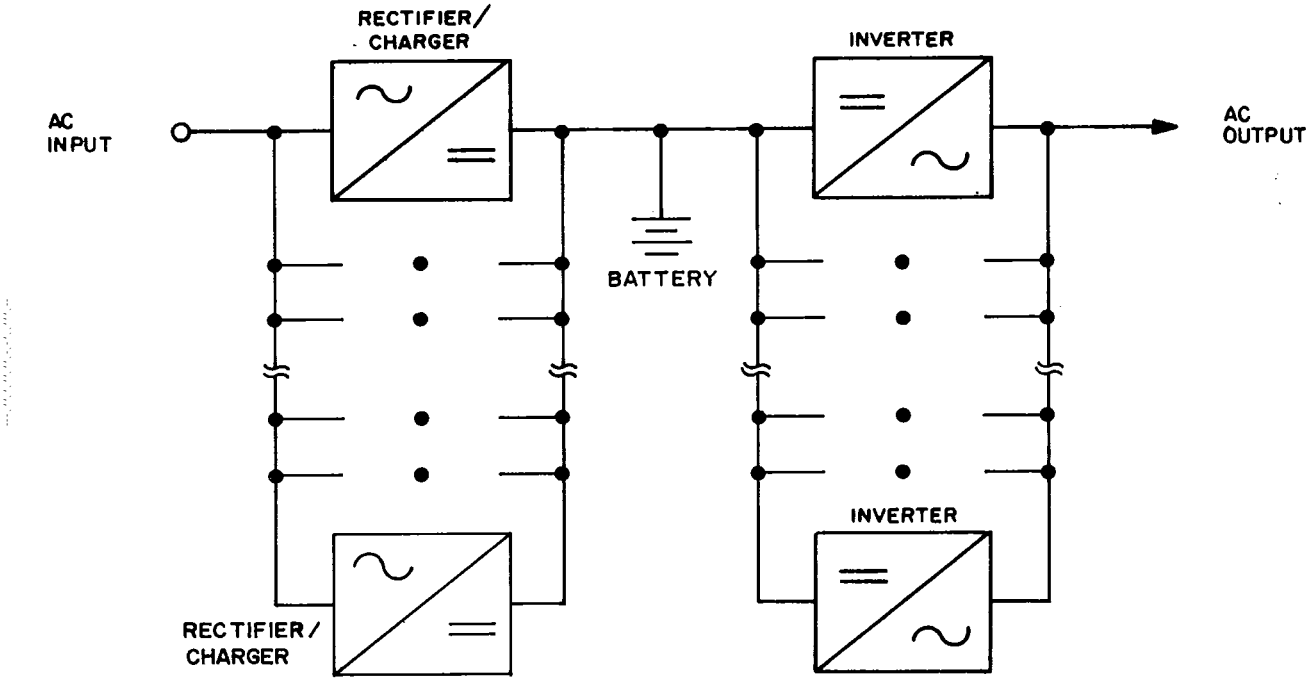

Figure 2-7
PARTIAL PARALLEL UPS

Copyright National Electrical Manufacturers Association
Provided by IHS under license with NEMA
No reproduction or networking permitted without license from IHS
Not for Resale

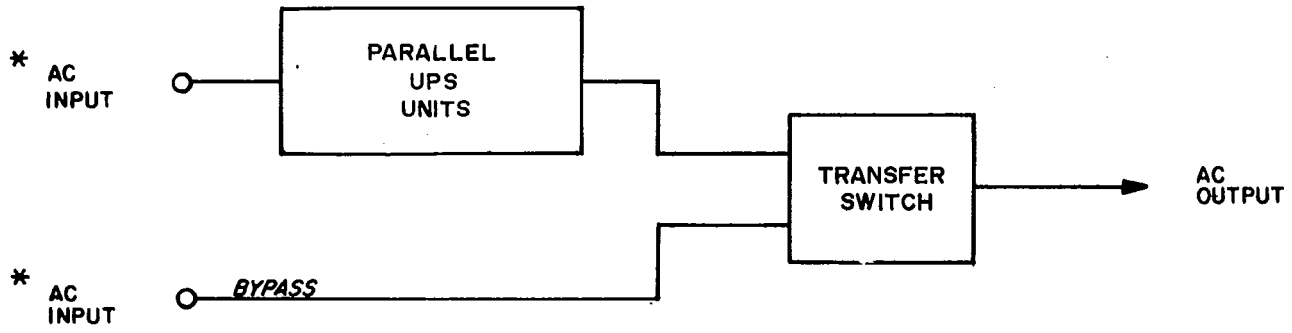

Figure 2-8
PARALLEL UPS WITH BYPASS AND TRANSFER SWITCH

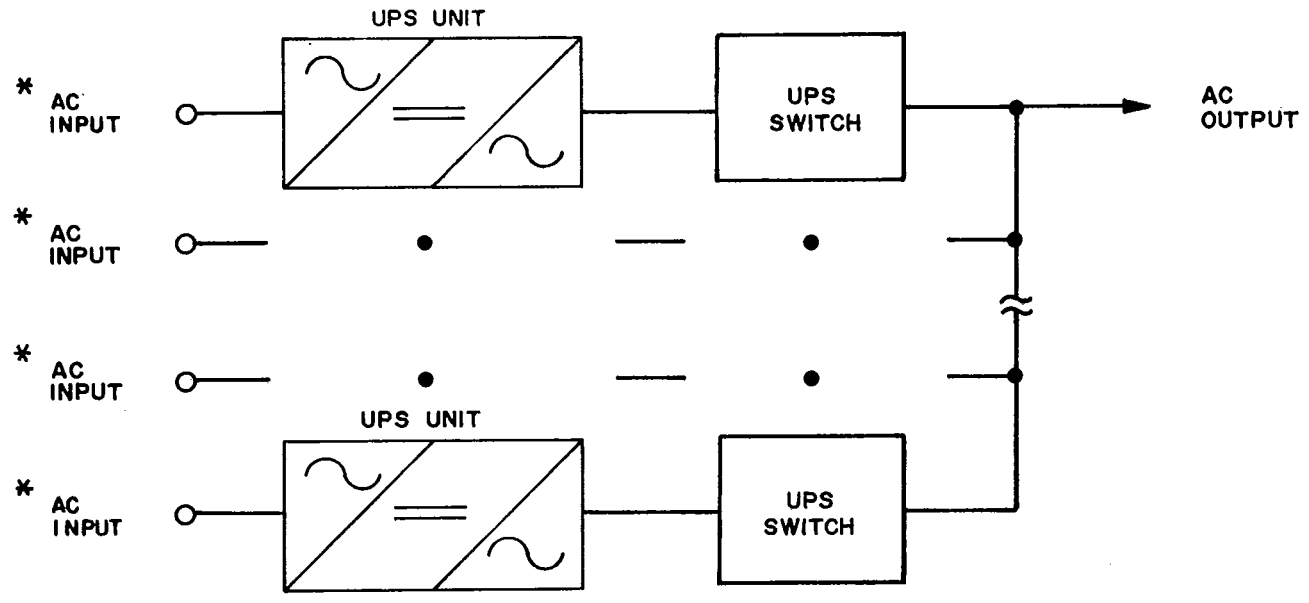

Figure 2-9
PARALLEL REDUNDANT UPS

Copyright National Electrical Manufacturers Association
Provided by IHS under license with NEMA
No reproduction or networking permitted without license from IHS
Not for Resale

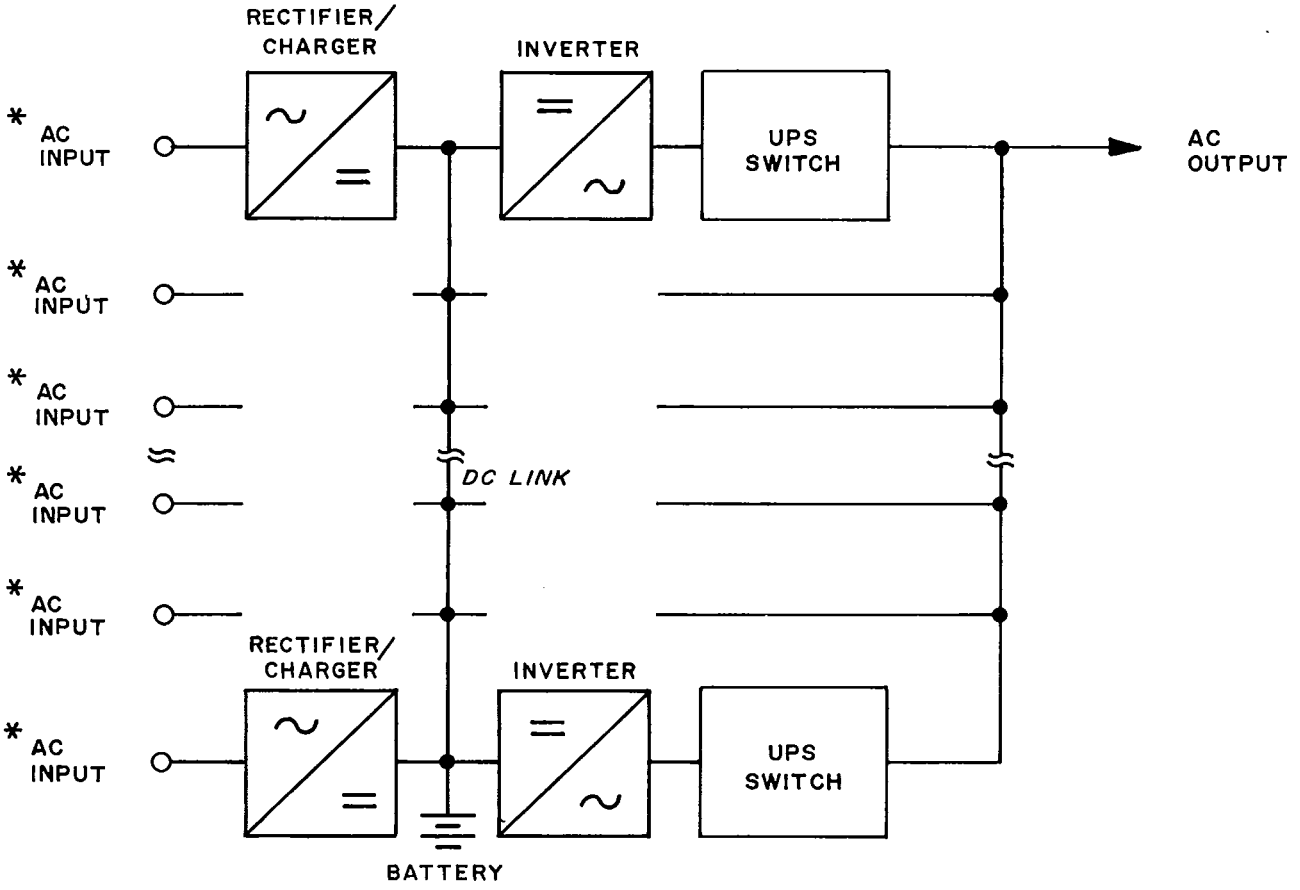

Figure 2-10
PARALLEL REDUNDANT UPS WITH COMMON DC LINK (SINGLE BATTERY)

Copyright National Electrical Manufacturers Association
Provided by IHS under license with NEMA
No reproduction or networking permitted without license from IHS
Not for Resale

2.4.2 Parallel Redundant UPS With Bypass and Transfer Switch

The parallel redundant UPS, as described below, with bypass and transfer switch is shown in Figure 2-12. It shall be functionally equivalent to Figure 2-4 and all the provisions of 2.2.4 shall apply.

NEMA Standard 11-3-1983.

2.4.3 Standby Configurations for Redundant UPS

2.4.3.1 Standby Redundant UPS

The standby redundant UPS units as shown in Figure 2-13 are comprised of two UPS units and a transfer switch.

Upon failure of the operating UPS unit, the standby UPS unit shall be selected by the transfer switch to maintain continuity of power.

NEMA Standard 11-3-1983.

2.4.3.2 Standby Redundant UPS With Transfer Switch (New)

The standby redundant UPS with common dc link and single battery is shown in Figure 2-14 and is characterized by two functional UPS rectifier/charger units and two functional inverter units with a common dc link (single battery and transfer switch).

Authorized Engineering Information 11-3-1983.

2.4.4 Standby Redundant UPS With Bypass and Transfer Switch

The standby redundant UPS is shown in Figure 2-15. It shall be functionally equivalent to Figure 2-4 and all of the provisions of 2.2.4 shall apply.

NEMA Standard 11-3-1983.

2.4.5

There may be some parts of a redundant UPS which are common to all the units. Failure of such a common part may result in loss of availability of load power.

Authorized Engineering Information 11-3-1983.

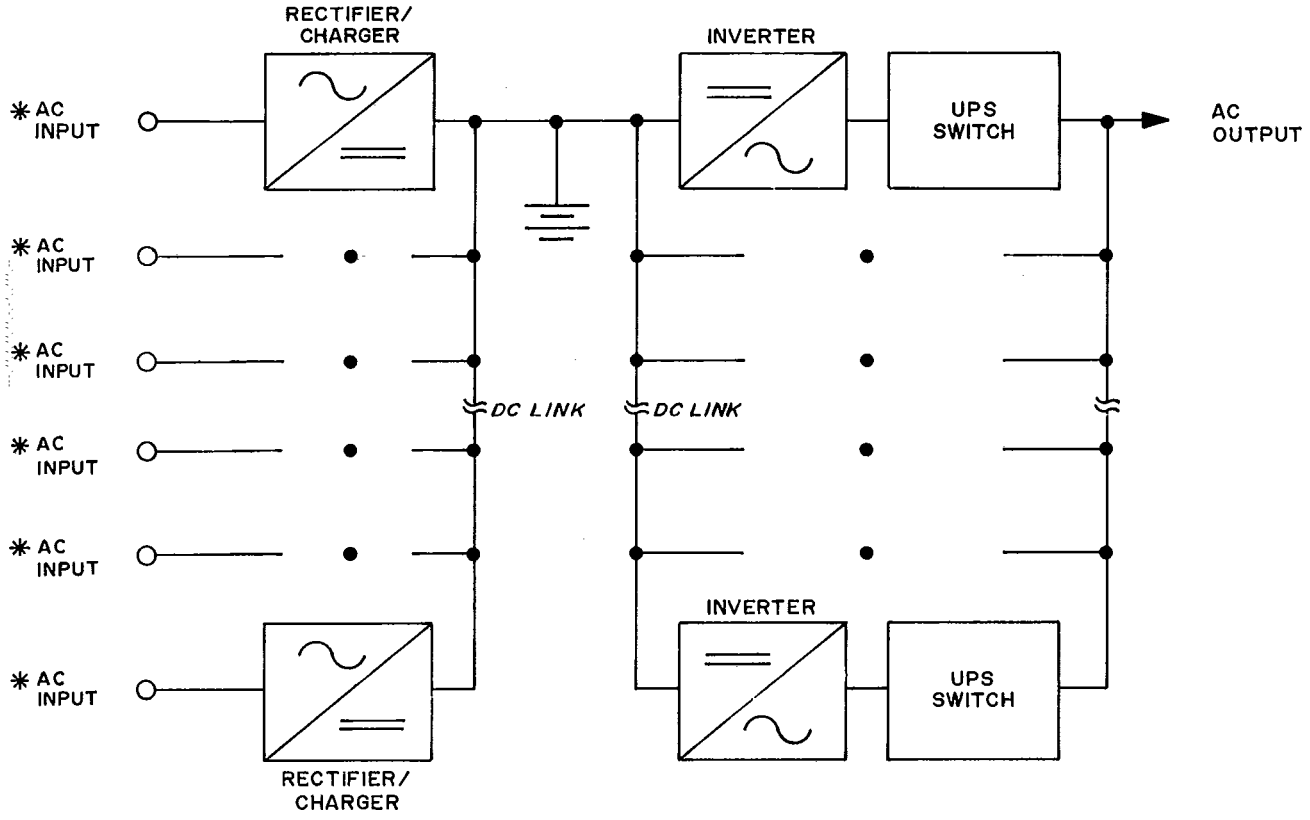

Figure 2-11
PARTIAL PARALLEL REDUNDANT UPS

Copyright National Electrical Manufacturers Association
Provided by IHS under license with NEMA
No reproduction or networking permitted without license from IHS
Not for Resale

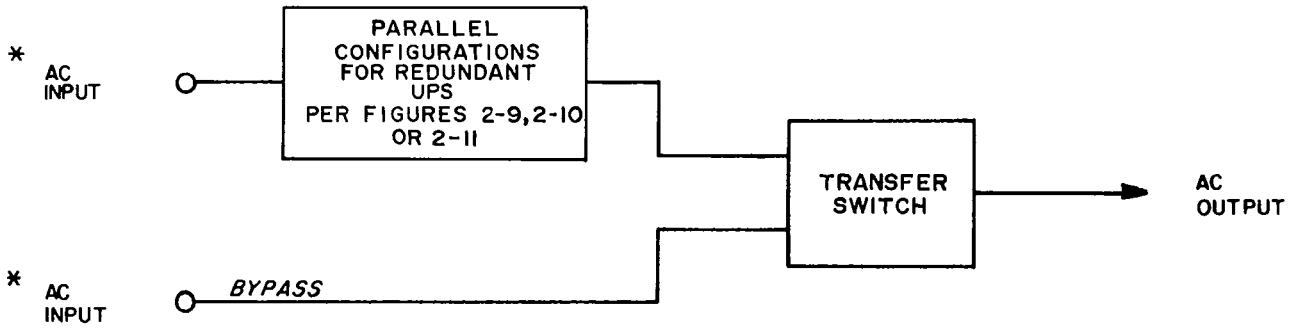

Figure 2-12
PARALLEL REDUNDANT UPS WITH BYPASS AND TRANSFER SWITCH

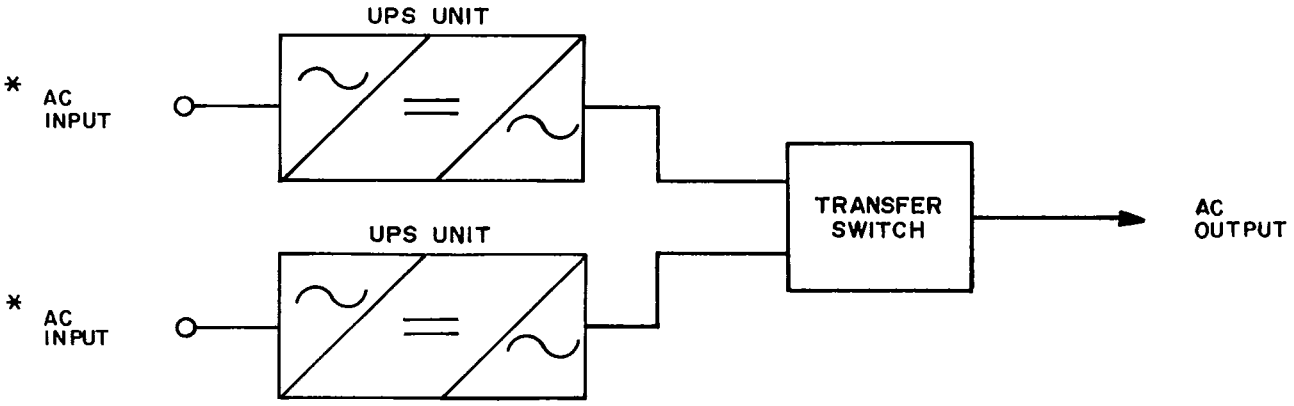

Figure 2-13
STANDBY REDUNDANT UPS WITH TRANSFER SWITCH

Copyright National Electrical Manufacturers Association
Provided by IHS under license with NEMA
No reproduction or networking permitted without license from IHS
Not for Resale

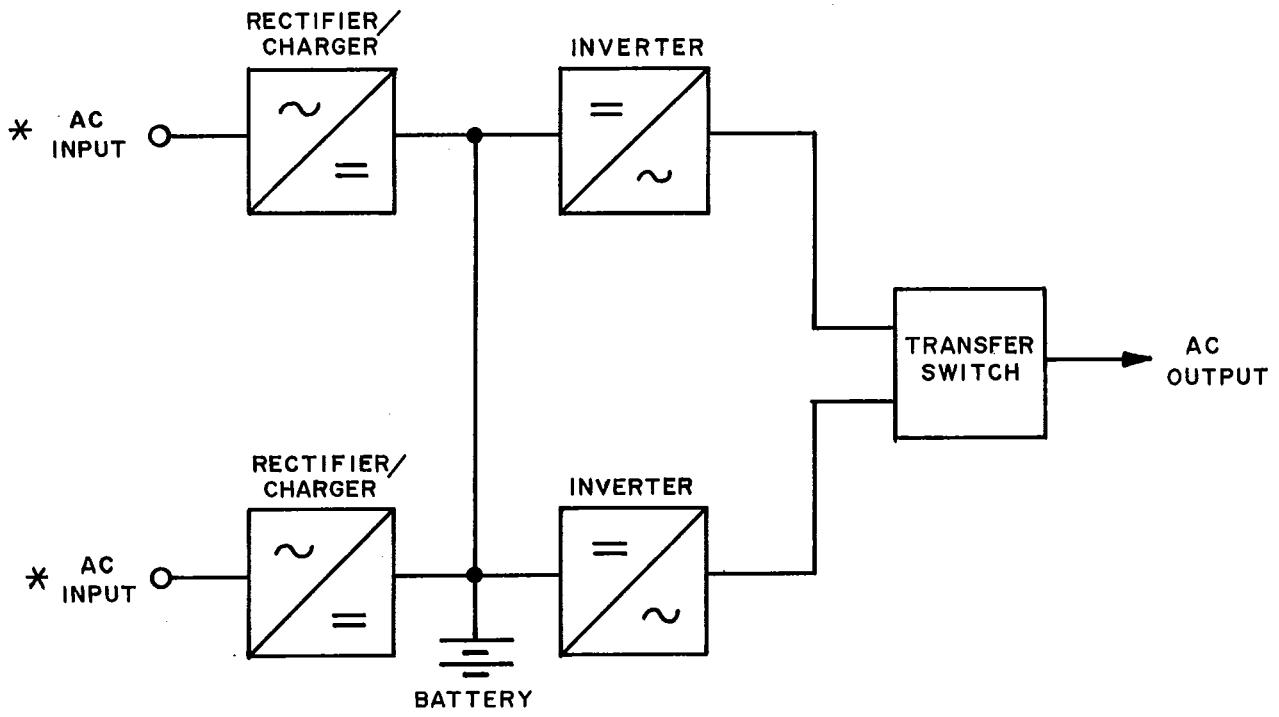

Figure 2-14
STANDBY REDUNDANT UPS WITH
COMMON DC LINK (SINGLE BATTERY) AND TRANSFER SWITCH

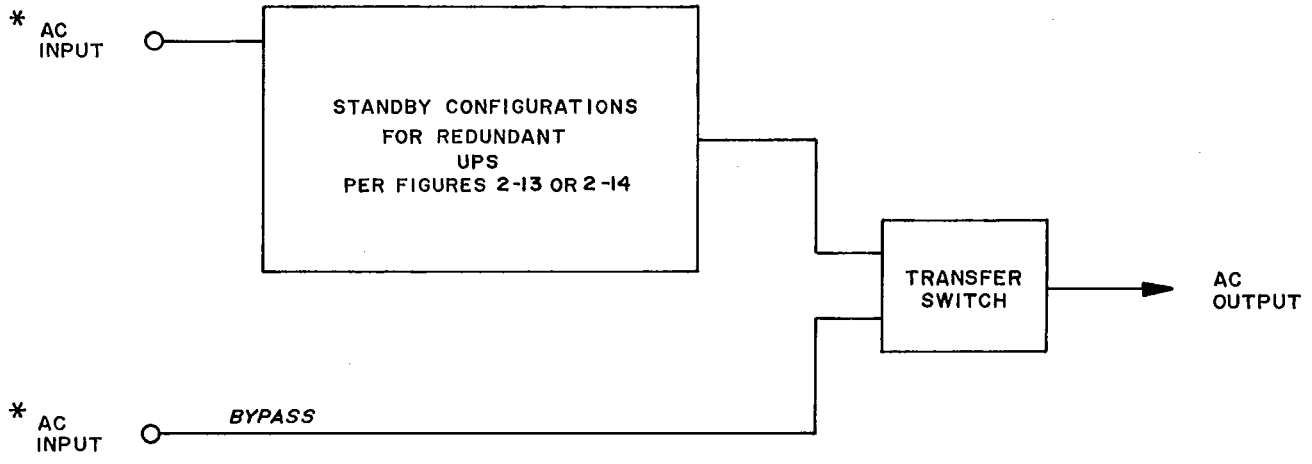

Figure 2-15
STANDBY REDUNDANT UPS WITH BYPASS AND TRANSFER SWITCH

Copyright National Electrical Manufacturers Association
Provided by IHS under license with NEMA
No reproduction or networking permitted without license from IHS
Not for Resale

Section 3
SERVICE CONDITIONS

3.1 INTRODUCTION

Unusual service conditions may have some detrimental effect on the uninterruptible power systems (UPS). Such effect depends upon the degree of departure from usual operating conditions and the severity of the environment to which the UPS is exposed. Of principal concern are unusual service conditions which may cause abnormal deterioration of the insulation system, electrical breakdown or mechanical wear, resulting in premature failure. The manufacturer of the UPS should be consulted for further information regarding any unusual service conditions.

Authorized Engineering Information 11-3-1983.

3.2 USUAL SERVICE CONDITIONS (EXCLUDING BATTERIES)*

An uninterruptible power system constructed in accordance with these standards shall be capable of operating under the following conditions when the following conditions prevail:

1. The ambient air temperature at the equipment is 25°C nominal, +15°C, −25°C. (If liquid coolant is used, the required temperature, pressure flow, and quality shall be indicated by the manufacturer).
2. The humidity does not exceed 95 percent (without condensation).
3. The altitude does not exceed 3300 feet (1000 meters).
4. The input alternating voltage range shall be as follows:

Nominal	Minimum	Maximum
120	106	127
208	184	220
240	212	254
277	245	293
480	424	508
575	508	600

5. The ac line input frequency has a tolerance ±2 percent of nominal.
6. Harmonics on the input alternating voltage supply shall not be exceeded by the following items:

a. Total harmonic distortion shall not exceed 10 percent.

b. Harmonics components shall not exceed values given in the maximum harmonic component Figure 3-1.

NEMA Standard 11-3-1983.

3.3 UNUSUAL SERVICE CONDITIONS

The manufacturer should be consulted if any unusual service conditions exist. Among such are exposure to:

1. Damaging fumes
2. Excessive moisture or dust
3. Very dirty, corrosive, explosive, or abrasive environments
4. Abrasive or conducting dust or both
5. Rain, steam, or oil vapor
6. Chemical fumes or flammable gases
7. Combustible mixture of dusts or gases
8. Salt air, seacoast, and ship board conditions
9. Severe weather or dripping water conditions
10. Extreme or sudden changes in temperature
11. Strong electromagnetic or Radio Frequency Interference fields or both
12. Radioactive levels above those of the natural background
13. Insects, or vermin, infestation or atmosphere conducive to growth or fungus
14. Restriction of ventilation
15. High radiated or conducted heat from other sources
16. Cooling liquid containing acid or impurities which may cause excessive scale, sludge, electrolysis, or corrosion of the converter parts exposed to the liquid coolant
17. Continuous average relative humidity above 95 percent or below 10 percent
18. Abnormal shock or vibration
19. Nuclear radiation
20. Altitudes in excess of 3300 feet (1000 meters)

Authorized Engineering Information 11-3-1983.

Copyright National Electrical Manufacturers Association
Provided by IHS under license with NEMA
No reproduction or networking permitted without license from IHS
Not for Resale

3.4 UNUSUAL ELECTRICAL CONDITIONS

The manufacturer shall be consulted if unusual electrical conditions exist. Some unusual electrical conditions are listed in 3.4.1.

3.4.1 AC Input(s) to UPS

1. The voltages (in excess of tolerances given in 3.2.4) shall be indicated.
2. The frequency (in excess of tolerances given in 3.2.5) shall be indicated.
3. The superimposed high frequency voltages, shall be indicated.
4. The voltage harmonics (in excess of those given in 3.2.6) shall be indicated.
5. The transient voltages or other electrical noise such as that caused by lightning or capacitive or inductive switching shall be indicated.
6. The maximum fault current availability shall be indicated.

Section 4
RATED VALUES AND PERFORMANCE OF UPS

4.1 GENERAL

The rated values for an UPS shall be regarded as those which describe operation under specified service conditions. (See Section 3). An UPS shall have its rating expressed in terms of both maximum continuous apparent power and maximum continuous real power available for linear loads. The power factor range over which the maximum rated apparent power is available and the specific power rating at unity power factor shall also be provided. These rated values shall apply to power available at the UPS output terminals. UPS rating selections are based on user's critical load requirements and the available UPS ratings in the industry. Equipment manufacturers should be consulted on the available ratings prior to sizing decisions. Typical UPS output ratings for single phase applications range from .1 to 75 KVA and for three phase applications from 15 to 1000 KVA. Multiples of these ratings should be used to assemble larger rating systems.

NEMA Standard 11-3-1983.

4.2 VALUES AND CHARACTERISTICS

4.2.1 Single UPS Unit

The following rated values and characteristics for a single UPS unit, as defined in 2.2 shall be specified by the manufacturer:

4.2.1.1 Input Related Values Under Nominal Conditions

1. Nominal ac input voltage, tolerance and phase configuration
2. Nominal ac input frequency and tolerance
3. Nominal rms input current at rated output power
4. Induced input total harmonic current content as a percentage of input rated current
5. In-rush current and duration
6. Maximum fault interrupting or withstand capability, or both, of circuit interrupting devices in the UPS that is, breakers, switches, fuses and so forth that can be subjected to available fault currents at any UPS terminals

Copyright National Electrical Manufacturers Association
Provided by IHS under license with NEMA
No reproduction or networking permitted without license from IHS
Not for Resale

7. Maximum rms input current during battery charge at rated output power (excluding inrush and duration)
8. Maximum rms input current (excluding inrush)
9. Input power factor at rated output power
10. Input displacement factor at rated output power
11. Input walk-in characteristics

4.2.1.2 Output Related Values Under Nominal Conditions

1. Nominal ac output voltage, tolerance, and phase configuration:
   a. Output voltage adjustment range
   b. Output voltage regulation under specified conditions
2. Nominal ac output frequency and tolerance
3. Nominal rms ac output current at rated output in volt amperes
4. Maximum total harmonic distortion and maximum single harmonic distortion of the output voltage under specified conditions
5. Output phase angle displacement tolerance under specified conditions
6. Maximum permissible load unbalance
7. Voltage deviation and recovery time for a step change in load current under specified conditions
8. UPS output fault current availability
9. Rate of change of output frequency

4.2.1.3 Energy Storage Related Values Under Nominal Conditions

1. The stored energy time under specified conditions
2. Restored energy time under specified conditions

4.2.1.4 Power Related Values Under Nominal Conditions

1. Rated power output expressed in volt-amperes and volts
2. UPS efficiency for rated output load under specified conditions
3. Calculated heat losses in BTU/hr's at rated load (without battery charging)
4. The overload rating expressed by the ratio of overload to rated output load under specified conditions
5. Load power factor range

4.2.2 Other Configurations

In addition to 4.2.1 (values and characteristics of UPS unit), the following rated values and characteristics shall be provided by the UPS manufacturer for the other configuration of UPS (see Section 2).

1. The total number of UPS units being utilized
2. The continuous output rating under specified conditions
3. All rated values and characteristics in 4.2.2.1 shall be specified for the configuration used.

4.2.3 All Configurations (With a Transfer Switch)

In addition to 4.2.1 and 4.2.2 (if applicable), the following rated values and characteristics shall be provided for any type of UPS which utilizes a transfer switch as described in Section 2:

1. Transfer switch voltage rating
2. Transfer switch current rating
   a. Continuous rating if used for continuous operation
   b. Momentary rating if used only momentarily (specify maximum current rating and maximum application time at that rating)
3. Load transfer characteristics
   a. Maximum transfer time, UPS to bypass
   b. Maximum transfer time, bypass to UPS
   c. Voltage, phase deviation and recovery time on transfer of rated load
4. UPS transfer switch losses if used for continuous operation shall be defined.

Copyright National Electrical Manufacturers Association
Provided by IHS under license with NEMA
No reproduction or networking permitted without license from IHS
Not for Resale

Section 5
TESTING STANDARDS

5.1 GENERAL

Equipment may be type and routine tested in the factory as a complete UPS, and less extensive operational tests with actual batteries and load may be performed on site. Alternatively, routine tests in the factory may be restricted to UPS functional units or combinations of such. The final test on site then replaces the UPS routine factory test. The test shown in Table 5-1 may be performed in any order.

Authorized Engineering Information 11-3-1983.

5.2 FUNCTIONAL UNITS TESTS

5.2.1 Rectifier Tests

Rectifier tests shall be performed according to NEMA PE 5-1983. Routine tests shall cover dielectric test, light load test, and a checking of auxiliary protection devices and control systems.

5.2.2 Inverter Tests

Inverter tests shall be performed in accordance with NEMA PV 4-1974 (R1980).

5.2.3 Testing of UPS Switches

5.2.3.1

Operational tests of UPS switches shall be performed in accordance with IEC 146 (1973) *Semiconductor Converters* (second edition) and IEC 146-2 (1974) Part 2. *Semiconductor Self-Commutated Converters*, (first edition), where applicable. Order from American National Standards Institute, 1430 Broadway, New York, NY 10018.

The following testing procedures may be employed:

1. Dielectric/Insulation—IEC 146 Sub-clause 492.1
2. Checking of auxiliary devices—IEC 146 Subclause 5.4
3. Checking of protective devices—IEC 146 Subclause 492.9
4. Checking of supervising and remote signalling circuits
5. Checking of measuring devices
6. Light load transfer test

Authorized Engineering Information 11-3-1983.

5.2.3.2

Type testing of UPS switches shall require a functional test with a complete UPS. In addition to the tests mentioned above, a type test program shall include:

1. Complete functional test, e.g. switching of loads
2. Transfer time test
3. Load test, temperature rise—IEC 146-2 Subclause 5.5
4. Short time overload—IEC 146-2 Sub-clause 5.9
5. Short circuit capability—IEC 146-2 Sub-clause 5.10

NEMA Standard 11-3-1983.

5.2.4 Monitoring and Control Equipment

Unit tests shall refer to:

1. Dielectric/insulation tests
2. Checking of electrical circuits
3. Checking of operation controls

Type testing shall not be required for monitoring and control equipment.

NEMA Standard 11-3-1983.

5.2.5 Batteries

Testing of storage batteries shall consist of a discharge test after complete installation on site (see 5.4.15).

NEMA Standard 11-3-1983.

5.2.6 UPS Testing Procedure

Following the functional testing, in accordance with 5.2, the UPS testing shall be completed at the installation site, per 5.3 and 5.4.

NEMA Standard 11-3-1983.

5.3 UPS TESTS

UPS testing shall be performed after wiring of the functional units to form a complete UPS either at the factory or at the installation site. (See Table 5-1.)

Copyright National Electrical Manufacturers Association
Provided by IHS under license with NEMA
No reproduction or networking permitted without license from IHS
Not for Resale

Table 5-1
TESTING SCHEDULE

Test	(Mandatory) Type Test	(Mandatory) Routine Test	Optional Type of Test When Required for Specific Application	(See pages 5–11) Specification
Light load	X	X		5.4.1
Auxiliary device(s)	X	X		5.4.2
Synchronization	X		X	5.4.3
Output frequency rate of change				5.4.4
Ac input failure	X	X		5.4.5
Ac input return	X	X		5.4.6
Simulation of parallel redundant UPS fault	X	X		5.4.7
Transfer	X	X		5.4.8
Full load	X		X	5.4.9
UPS efficiency	X		X	5.4.10
Unbalanced load	X		X	5.4.11
Output voltage unbalance	X		X	5.4.12
Current division in parallel UPS or parallel redundant	X		X	5.4.13
Stored energy time			X	5.4.14
Restored energy time			X	5.4.15
Overload capability	X		X	5.4.16
Short-circuit-current capability	X		X	5.4.17
Restart			X	5.4.18
Output overvoltage			X	5.4.19
Periodic output voltage modulation			X	5.4.20
Frequency modulation			X	5.4.21
Radio frequency interference and conducted noise			X	5.4.22
Harmonic components	X		X	5.4.23
Audible noise	X		X	5.4.24
Surge Voltage	X		X	5.4.25

NEMA Standard 11-3-1983.

5.4 TEST SPECIFICATIONS

The following tests when conducted on site, shall use the maximum available load which does not exceed the rated continuous load:

1. With and without bypass, where appropriate
2. With and without redundancy, where appropriate

* The load applied is limited because a full load is not necessary at this testing stage.

*Authorized Engineering Information 11-3-1983.

5.4.1 Light Load Test

This test shall be performed to verify that the UPS is correctly connected and all functions operate properly. The following tests shall be performed:

1. Output voltage and frequency
2. The operation of all control switches, meters and other means required to determine proper UPS operation.

NEMA Standard 11-3-1983.

Copyright National Electrical Manufacturers Association
Provided by IHS under license with NEMA
No reproduction or networking permitted without license from IHS
Not for Resale

5.4.2 Auxiliary Device(s) Test

The functioning of auxiliary devices, such as lighting, cooling, pumps, fans, annunciators, shall be verified in conjunction with the light load test, or during another test if it is more convenient.

NEMA Standard 11-3-1983.

5.4.3 Synchronization Test

This test shall be performed when synchronization to an external source is required. Frequency variation limits shall be tested by use of a variable frequency generator or by simulation of circuit conditions.

NEMA Standard 11-3-1983.

This test may be performed during another test if it is more convenient.

Authorized Engineering Information 11-3-1983.

5.4.4 Output Rate of Change Test

This test shall be performed to determine the output frequency rate of change.

NEMA Standard 11-3-1983.

5.4.5 AC Input Failure Test

The test shall be performed, with a battery or other appropriate dc source, by interrupting the ac input powers or shall be simulated by switching off all UPS rectifiers and bypass feeders at the same time. Output voltage variations shall be checked for specified limits. Frequency variation shall be observed.

NEMA Standard 11-3-1983.

5.4.6 AC Input Return Test

AC input return test shall be performed either by restoring the ac input power, or simulated by switching on all UPS rectifiers and bypass feeders at the same time.

Proper operation of all UPS rectifier including walk in, if applicable, shall be observed. AC output voltage and frequency shall also be observed.

This test shall normally be performed with a battery or appropriate dc source. If the test in 5.4.15 is specified, this test shall be performed at the end of that test. NEMA Standard 11-3-1983.

5.4.7 Simulation of Parallel Redundant UPS Fault Test (Applies to Figures 2-9 and 2-10)

This test is required for UPS with parallel redundant connections. Faults of functional units or UPS units or both, shall be carried out by simulation. Output transients shall be observed.

NEMA Standard 11-3-1983.

5.4.8 Transfer Test

This test shall be required for "UPS with Bypass and Transfer Switch" or "Standby Redundant UPS" to verify the characteristics listed in 4.2.3 as applicable to the UPS configuration.

5.4.9 Full Load Test

Load tests shall be performed by connecting loads to the UPS output, equivalent to the full rated load. UPS in parallel connection shall be load tested by testing individual UPS units separately or as a whole.

NEMA Standard 11-3-1983.

5.4.10 UPS Efficiency Test

UPS efficiency shall be determined by the measurement of the real power input and output, or shall be derived from individual UPS unit testing results.

NEMA Standard 11-3-1983.

5.4.11 Unbalanced Load Test

Unbalanced loads shall be applied to the UPS or UPS units. The voltage unbalance shall be observed.

Phase angle deviations shall be observed, and calculation from the values of phase-to-phase and phase-to-neutral voltages.

NEMA Standard 11-3-1983.

5.4.12 Output Voltage Balance and Phase Tests

Output voltage balance shall be observed under symmetrical load conditions.

Phase-to-phase to phase-to-neutral and output voltages shall be observed. Phase angle deviations shall be observed, or derived by calculation from the values of phase-to-phase and phase-to-neutral voltages.

NEMA Standard 11-3-1983.

5.4.13 Current Division in Parallel or Parallel Redundant UPS Test

Current Division in the parallel or parallel redundant UPS units or functional units shall be observed with either a simulated or actual load.

5.4.14 Stored Energy Time Test

This test is used to establish the stored energy time. This is the minimum time during which the UPS will ensure continuity of load power with a fully charged energy storage system.

Copyright National Electrical Manufacturers Association
Provided by IHS under license with NEMA
No reproduction or networking permitted without license from IHS
Not for Resale

If rated load is not available it is possible to apply a partial load to check the actual battery discharge characteristics and compare these with characteristics provided by the battery manufacturer. Discharge time with rated load, can then be calculated. The test should be performed with a fully charged battery and may be performed with other battery conditions.

New batteries often do not provide full capacity during the initial operation period. The discharge tests may be repeated after a reasonable recharge time, if the original test has failed.

Authorized Engineering Information 11-3-1983.

5.4.15 Restored Energy Time Test

When a restored energy time is specified, it may be established by repeating the stored energy time test after the specified charging period, as described in 5.4.14.

Authorized Engineering Information 11-3-1983.

5.4.16 Overload Capability Test

The values of overload(s) sequences shall be applied for the time interval(s) specified. Values of voltage and current shall be observed.

NEMA Standard 11-3-1983.

5.4.17 Short Circuit Test

A short circuit shall be applied to the UPS output and the following observed for an UPS without bypass:

1. The operation of protective devices or circuits
2. The peak short circuit
3. The peak subcycle
4. The maximum output short circuit current (length of time)
5. The minimum output short circuit current (length of time)

Appropriate circuit protective devices (fuses, circuit breakers) shall be permitted to be applied when making these tests.

NEMA Standard 11-3-1983.

5.4.18 Restart Test

When required, automatic or other restart means shall be tested after a complete shutdown of UPS.

5.4.19 Output Overvoltage Test

When required, output overvoltage protection shall be tested.

5.4.20 Periodic Output Voltage Modulation Test

When required, voltages shall be observed at specific loads and operating conditions.

5.4.21 Frequency Modulation Test

When required, the frequency modulation test shall be consistent with NEMA PV 4-1974 (R1980).

5.4.22 Radio Frequency Interference and Conducted Noise Tests

Radio frequency interferences and conducted noise tests shall be consistent with federal and state and local codes, ordinances or regulations where applicable.

Radio frequency interference and conducted noise of UPS output shall be specified for actual rated loads. NEMA Standard 11-3-1983.

5.4.23 Harmonic Components Test

Harmonic components of output voltage shall be tested under rated linear load conditions. (See NEMA Standards Publication No. PV 4-1974 (R1980), *Semiconductor Self-Commutated Converters.*) NEMA Standard 11-3-1983.

5.4.24 Audible Noise Test

Audible noise shall be tested in accordance with ANSI S1.2-1971, *Method for Physical Measurement of Sound,* using a sound level meter conforming to the requirements of ANSI S1.4-1971.

Authorized Engineering Information 11-3-1983.

5.4.25 Surge Withstand Capability Test

The ac input and ac output terminals of the UPS shall be subjected to the appropriate surge voltage waveform as described in ANSI/IEEE C37.90a-1974 (R1980), *Surge Withstand Capability (SWC) Test.*

The UPS shall then be checked for proper operation.

5.5 TEST MEASURING METHODS FOR INPUT AND OUTPUT

5.5.1 Accuracy

Harmonics may influence the accuracy of the test measurement, and they should be evaluated in the test results.

Authorized Engineering Information 11-3-1983.

5.5.2 Voltage Transients

Voltage transients shall be measured by either an oscilloscope, transient recorder, or by another method which records momentary values of transients.

NEMA Standard 11-3-1983.

Copyright National Electrical Manufacturers Association
Provided by IHS under license with NEMA
No reproduction or networking permitted without license from IHS
Not for Resale

Section 6
SAFETY

6.1 INSTALLATION, OPERATING AND MAINTENANCE INSTRUCTION

6.1.1 Installation Instructions

The manufacturer shall provide installation instructions to include the following:

1. All required user assembly and interconnections
2. All required mountings and clearances
3. External connections including groundings
4. Environmental requirements

6.1.2 Operating Instructions

The manufacturer shall provide operating instructions to include the following:

1. Warning and precautionary statements
2. User operated controls

6.1.3 Maintenance Instructions

The manufacturer shall provide maintenance instructions to include the following:

1. Preventative maintenance
2. Corrective maintenance

NEMA Standard 11-3-1983.

6.2 CONSTRUCTION

6.2.1 Markings

The manufacturer shall provide markings to include the following:

1. Nameplate

The following minimum information shall be provided on the nameplate of the UPS:

a. Manufacturer's name
b. Model designation
c. Serial number or control number
d. Weight
e. Rated input voltage and phase configuration
f. Rated ac input frequency
g. Rated ac input current
h. Rated dc voltage (optional)
i. Rated dc current (optional)
j. Rated ac output voltage
k. Rated ac output frequency
l. Rated ac output current
m. Rated ac output power (optional)

2. Terminal Markings

User connections shall be permanently identified to permit proper installation.

3. Precautionary Labeling

Personnel shall be warned against hazards, where applicable, by use of adequate precautionary labeling. As a minimum, the information shown in Figure 6-1 or its equivalent shall be placed on the UPS.

The information shall be readily visible and may be on a label, tag, or other printed form and permanently affixed to the equipment. The company name and address shall appear on the label unless it is readily visible elsewhere on the product. A label identification number shall appear on the precautionary label.

NEMA Standard 11-3-1983.

WARNING: Protect yourself and others. Read and understand this label.

ELECTRIC SHOCK can kill.

- Read and understand the manufacturer's instructions and your employer's safety practices.
- Do not touch live electrical parts.

DO NOT REMOVE THIS LABEL

Figure 6–1
PRECAUTIONARY LABELING

6.2.2 Enclosure

The equipment shall be provided with surrounding case or enclosure constructed to provide a degree of protection to personnel against accidental contact with energized and moving parts.

NEMA Standard 11-3-1983.

6.2.3 User Connections

Alternating-current terminals shall be of such a size and type and shall be so located that they will be capable of accommodating the power wiring specified for the maximum rated current in Article 310 of the 1984 *National Electrical Code.*

A grounding terminal or connection shall be provided to accommodate a grounding wire coming into the charger and shall have an ampacity equal to or greater than one half that of the input terminals described in the preceding paragraph.

Copyright National Electrical Manufacturers Association
Provided by IHS under license with NEMA
No reproduction or networking permitted without license from IHS
Not for Resale

Direct-current terminals shall be of such a size and type and shall be so located that they will be capable of accommodating the power wiring specified for the maximum rated current in Article 310 of the 1984 *National Electrical Code.*

Control terminals shall be of such size and type that they will accommodate the wiring specified in Article 310 of the 1984 *National Electrical Code.* The charger manufacturer shall specify the voltage and current requirements of these terminations.

Terminals shall be of such a size and type and shall be so located that they will be capable of accommodating the power wiring specified for the proper ratings.

NEMA Standard 11-3-1983.

6.2.4 Wire and Insulation

The wire and insulation shall be consistent with federal and state and local codes, ordinances, or regulations where applicable.

NEMA Standard 11-3-1983.

Higher connection temperatures corresponding to the temperature rating of the cable are applicable where cables with higher temperature insulation are used. (Total temperature is limited to a maximum of 105°C.)

The same temperature rise limitations may be used for properly applied aluminum connections. Aluminum shall not be placed in direct contact with silver.

The values given in Table 6-2 do not apply to transformers, diodes or fuses, or to their connections.

NEMA Standard 11-3-1983.

6.3 PRECAUTIONARY LABELING

Precautionary labeling shall be prepared to give information on hazards, and precautionary measures, to users of uninterruptible power systems.

A precautionary labeling statement shall be prefixed by the word "CAUTION," "WARNING," or "DANGER".

Table 6-1
INSULATING MATERIALS

Class of Insulating Material	Limit of Hottest-spot Temperature Rise, Degrees C*	Limit of Hottest-spot Total Temperature, Degrees C*
90	40	90
105	55	105
130	80	130
155	105	155
180	130	180
220	170	220

* For temperature limits for insulating materials in circuit breakers and other devices used in UPS refer to the appropriate device standards.

Table 6-2
INSULATING MATERIALS

Type of Bus and/or Connection	Limit of Hottest-spot Temperature Rise, Degrees C	Limit of Hottest-spot Total Temperature, Degrees C
Buses and Connections with:		
Bear untreated bolted copper-to-copper connecting joints	55	105
Silver-surfaced or equivalent connecting joints	55	105
Connections to insulated cables (Note I):		
Copper-to-copper or equivalent connecting joints	20	70
Silver-surfaced or equivalent connecting joints	35	85

6.3.1 Labeling Size, Legibility and Location Requirements

Size, legibility, and location of precautionary labeling shall be such that it can be read and understood by those who may encounter the equipment before they are exposed to the hazards identified.

6.3.2 Signal Words

In descending order of severity, three signal words are recognized to identify the level of hazards: **DANGER, WARNING,** and **CAUTION.**

DANGER indicates an immediate hazard that will result in death or severe personal injury if the precaution is not followed.

WARNING indicates a potential hazard that can result in death or severe personal injury if the precaution is not followed.

CAUTION indicates a hazard that can result in minor personal injury or property damage if the precaution is not followed.

NEMA Standard 11-3-1983.

Copyright National Electrical Manufacturers Association
Provided by IHS under license with NEMA
No reproduction or networking permitted without license from IHS
Not for Resale

Appendix A

The text of Appendix A is based on the preliminary draft Document 22B(Secretariat)55 which was prepared by Subcommittee 22B: Semi-conductor Converters, of the International Electrotechnical Commission (IEC), and circulated to all its National Committees for comments and discussion. The IEC accepts no responsibility for changes that may be introduced between this draft and the final published standard.

NEMA has obtained reprint permission from IEC, Geneva, Switzerland to include Appendix A in NEMA Standards Publication No. PE I-1983.

TABLE OF CONTENTS

		Page
Section 1	Scope	25
Section 2	Object	25
Section 3	Terms and definitions	25
Section 4	Abbreviations and symbols	27
Section 5	Explanations to UPS switch definitions	28
Section 6	Service conditions for UPS switches	35
Section 7	Rated values and performance	36
Section 8	Testing of UPS switches	37

Copyright National Electrical Manufacturers Association
Provided by IHS under license with NEMA
No reproduction or networking permitted without license from IHS
Not for Resale

Section 1
SCOPE

This Appendix applies to all power switches that form integral parts of a UPS and are associated with its output. Included are interrupters, bypass switches, isolating switches, load transfer switches and tie switches. These switches interact with other functional units of the UPS to maintain continuity of load power.

This Appendix does not refer to conventional mains distribution boards, rectifier input switches or d.c. switches (that is for batteries, rectifier output or inverter input, and so forth).

Section 2
OBJECT

This Appendix is intended to be used in conjunction with the future standard *Method of Specifying the Performance and Test Requirements of Uninterruptible Power Systems*. Refer to this standard for additional terms and definitions and for information on UPS. Also refer to IEV Chapter 551 *Power Electronics* for additional definitions.

Section 3
TERMS AND DEFINITIONS

3.1 UPS SWITCH

Switch (quenched, line or self-commutated electronic or mechanical, depending on required continuity of load power) used to connect/isolate UPS or bypass to/from load.

3.2 ELECTRONIC UPS POWER SWITCH

Operative unit for electronic UPS power switching comprising at least one electronic controllable valve device.

3.3 MECHANICAL UPS POWER SWITCH

UPS power switch mechanical separable contacts, operated either manually or automatically.

3.4 HYBRID UPS POWER SWITCH

UPS power switch with mechanical separable contacts in combination with at least one electronic controllable valve device.

3.5 OPERATION

The transfer of a UPS switch from the on to the off state (opening operation) or vice versa (closing operation).

3.6 MANUAL CONTROL

Control of an operation by human intervention.

3.7 AUTOMATIC CONTROL

Control of an operation without human intervention, in response to the occurrence of predetermined conditions.

3.8 SEMIAUTOMATIC CONTROL

Control of a switch where one of the typical modes either making or breaking is effected automatically while the other must be effected by human intervention.

Copyright National Electrical Manufacturers Association
Provided by IHS under license with NEMA
No reproduction or networking permitted without license from IHS
Not for Resale

3.9 SYNCHRONOUS TRANSFER

Transfer of the load power between two sources which are synchronized in frequency and phase.

3.10 ASYNCHRONOUS TRANSFER

Transfer of the load power between two sources which are not synchronized.

3.11 MAKE-TIME

The interval of time between the initiation of the closing of a UPS switch and the instant when the current begins to flow in the main circuit.

3.12 BREAK-TIME

The interval of time between the initiation of the opening time of a UPS switch and the end of current flow in the circuit considered.

3.13 INTERRUPTING TIME

Time interval during which the output voltage is below the lower limit of the tolerance band.

3.14 TRANSFER TIME

Time interval between the initiation of transfer and the instant when the output quantities have been transferred.

3.15 SELF COMMUTATED ELECTRONIC SWITCH

Electronic switch where the commutating voltage is supplied by components within the electronic switch.

3.16 LINE COMMUTATED ELECTRONIC SWITCH

Electronic switch where the commutating voltage is supplied by the line.

3.17 UPS INTERRUPTER

UPS switch which is capable of making, carrying and breaking currents under usual circuit conditions and also making and carrying for a specified time and breaking currents under specified unusual circuit conditions.

3.18 UPS ISOLATION SWITCH

A mechanical switching device which provides in the open position an isolating distance and which may be capable of making, carrying and breaking currents, in accordance with UPS operational requirements such as circuit breakers, contactors, disconnectors, and so forth.

3.19 TRANSFER SWITCH

UPS switch used to transfer power from one source to another.

3.20 TIE SWITCH

UPS switch which can connect two or more ac busbars together.

3.21 UPS-MAINTENANCE BYPASS SWITCH

Switch designed to isolate a section or sections of the UPS for safety during maintenance and maintaining continuity of load power via an alternate path.

Copyright National Electrical Manufacturers Association
Provided by IHS under license with NEMA
No reproduction or networking permitted without license from IHS
Not for Resale

Section 4
ABBREVIATIONS AND SYMBOLS

4.1 ABBREVIATIONS

For convenience, the following abbreviations will be used throughout the rest of this standard.

EPS—Electronic UPS Power Switch
HYB—Hybrid UPS Power Switch
INT—UPS Interruptor
ISO—UPS Isolation Switch
LCE—Line Commutated Electronic Switch
MBP—UPS Maintenance Bypass Switch
MPS—Mechanical UPS Power Switch
SCE—Self Commutated Electronic Switch
TIE—Tie Switch
TRA—Transfer Switch

4.2 SYMBOLS

This standard throughout uses one-line diagrams to represent both monophase and polyphase devices and circuits.

4.2.1 Mechanical UPS Power Switch

Symbol	Description
4.2.1.1 	General symbol switch
4.2.1.2 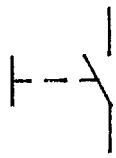	Manually controlled switch
4.2.1.3 	Circuit breaker
4.2.1.4 	Contactor

4.2.2 Electronic UPS Power Switch

SYMBOL	DESCRIPTION
4.2.2.1 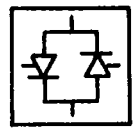	Line commutated
4.2.2.2 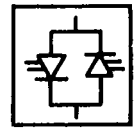	Self commutated

Copyright National Electrical Manufacturers Association
Provided by IHS under license with NEMA
No reproduction or networking permitted without license from IHS
Not for Resale

Section 5
EXPLANATIONS TO UPS SWITCH DEFINITIONS

This chapter deals with some typical applications and arrangements of UPS switches and their functional characteristics. For convenience, the UPS switches are shown in the diagrams as separate from the UPS units. In some instances, the UPS switches are actually parts of UPS units.

5.1 UPS INTERRUPTERS

UPS interrupters are "on-off" switches in series with UPS units. In addition, the term may be used to describe the devices which connect or disconnect loads to or from a common output bus as shown in Figure 5-1.

Figure 5-2 shows UPS interrupters used in a parallel redundant UPS to connect or disconnect UPS units to a common bus.

In some UPS designs, the inverter itself is used as a UPS interrupter. In this type of configuration, the inverter is designed to act as an impedance to power flow.

Figure 5-3 shows UPS interrupters used to connect or disconnect a load branch(s) to or from the common bus.

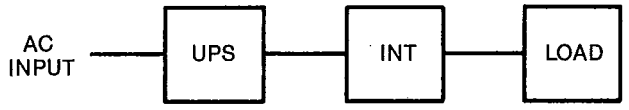

Figure 5-1

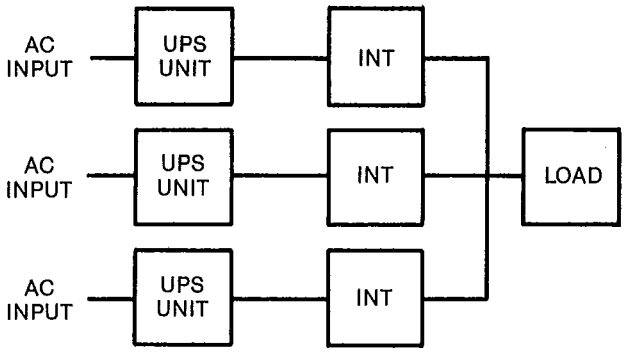

Figure 5-2

5.2 TRANSFER SWITCH

Automatic or manual transfer switches are used in case of:

1. UPS failure
2. Maintenance
3. Load current transients (inrush currents or fault clearing currents)
4. Peak load

These switches may be operated as synchronous or asynchronous transfer.

5.2.1 Types of Transfer Switch

There are three types of transfer switches:

1. Mechanical
2. Electronic
3. Hybrid

Such characteristics as transfer time, overcurrent rating and isolation of input and output are different among these switches.

5.2.1.1 Mechanical Transfer Switch

These transfer switches are advantages regarding isolation.

Figure 5-4 shows a mechanical transfer switch where in UPS operation MPS 1 is closed and MPS 2 is open. In transferred condition, MPS 1 is open, MPS 2 is closed.

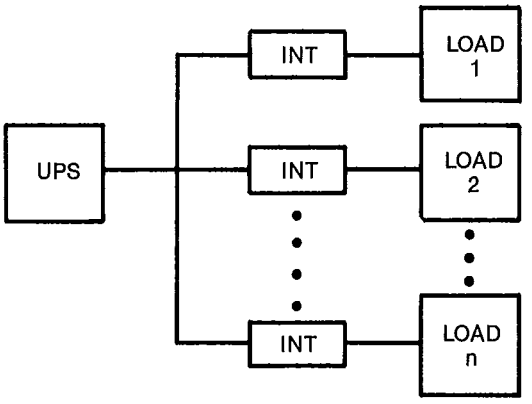

Figure 5-3

Copyright National Electrical Manufacturers Association
Provided by IHS under license with NEMA
No reproduction or networking permitted without license from IHS
Not for Resale

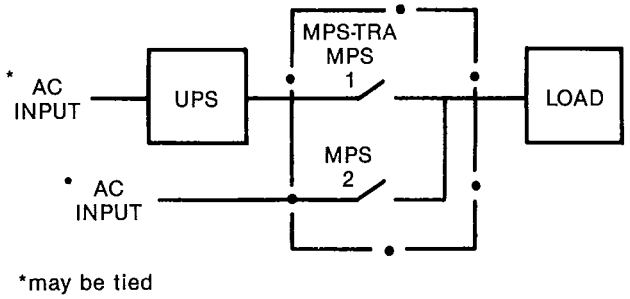

Figure 5-4

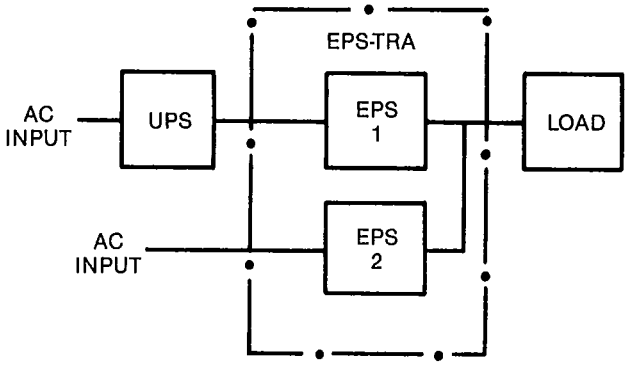

Figure 5-5

5.2.1.2 Electronic Transfer Switch

These transfer switches have advantages regarding transfer time; however, they do not provide isolation capability.

Figure 5-5 shows an electronic transfer switch where in UPS operation EPS 1 is conducting and EPS 2 is not.

5.2.1.3 Hybrid Transfer Switch

In the example of the transfer switch of Figure 5-6, the UPS is the usual power source with a mechanical switch in its output. Upon failure of the operating UPS, the electronic switch in the bypass will be turned on before the mechanical switch automatically opens.

Operation of the transfer switch in Figure 5-7 is almost the same as that of Figure 5-6 except that another mechanical switch also closes after the electronic switch closes. Therefore, the electronic switch only carries the load current for a short time. Advantages of the hybrid switches are that they possess merits of both the electronic and mechanical switches.

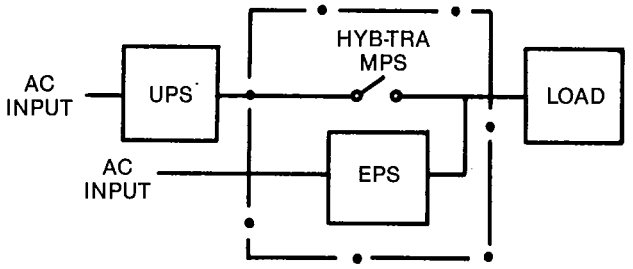

Figure 5-6

5.2.2 Other Examples of Use of Transfer Switches

5.2.2.1 Load Transfer Switch

Switches used for switching of loads are called load transfer switches.

Figure 5-8 shows an example of mechanical load transfer switches and Figure 5-9 electronic load transfer switches.

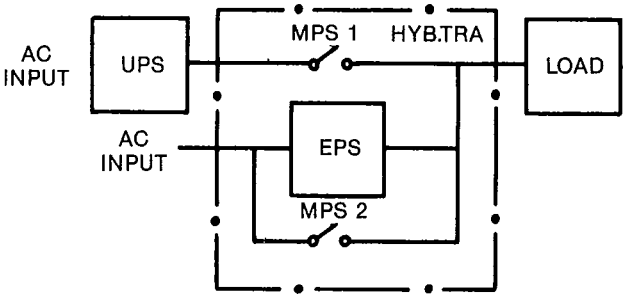

Figure 5-7

Copyright National Electrical Manufacturers Association
Provided by IHS under license with NEMA
No reproduction or networking permitted without license from IHS
Not for Resale

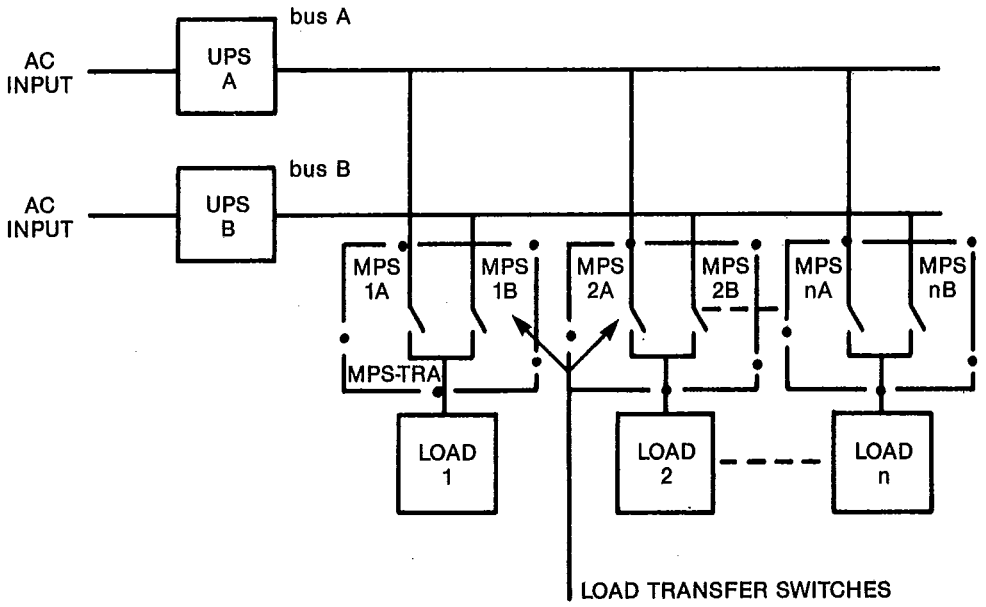

Figure 5-8

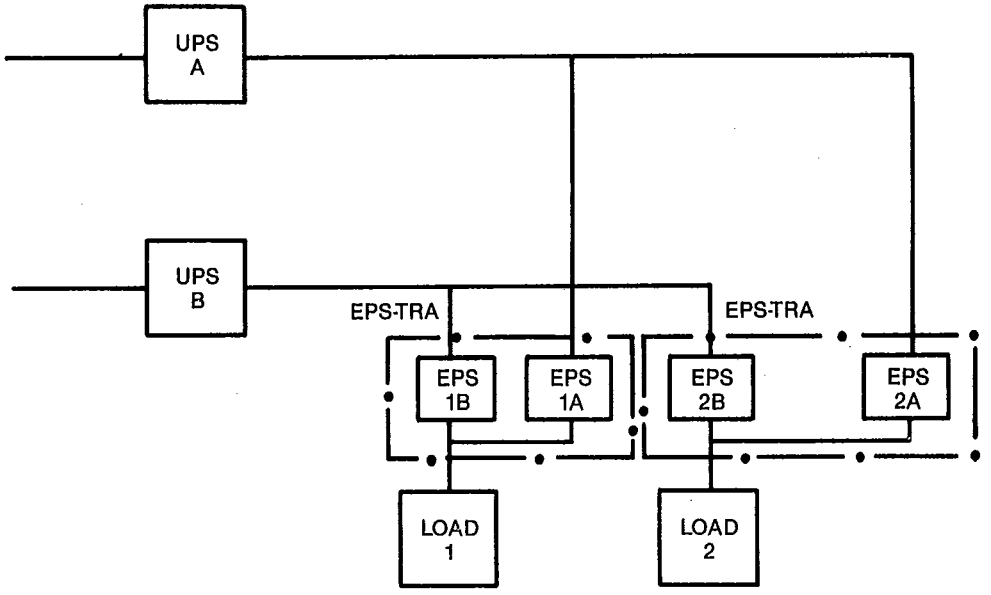

Figure 5-9

Copyright National Electrical Manufacturers Association
Provided by IHS under license with NEMA
No reproduction or networking permitted without license from IHS
Not for Resale

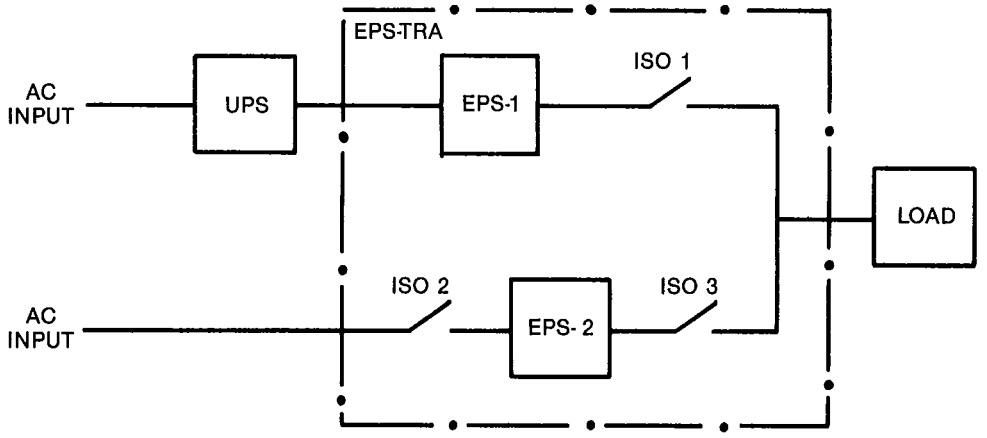

Figure 5-10

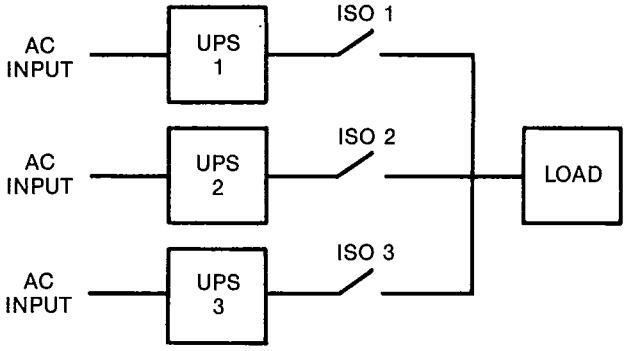

Figure 5-11

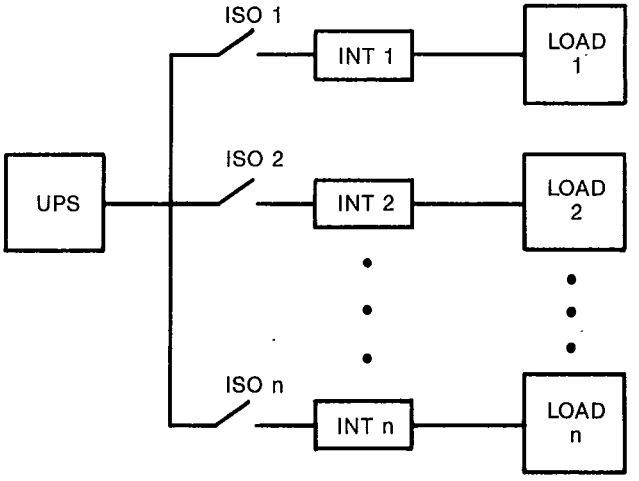

Figure 5-12

Copyright National Electrical Manufacturers Association
Provided by IHS under license with NEMA
No reproduction or networking permitted without license from IHS
Not for Resale

5.3 UPS ISOLATION SWITCH

UPS isolation switches are used as auxiliary parts of UPS switches.

A typical use of UPS isolation switches is to isolate electronic UPS switches from power sources for maintenance purposes. Figures 5-10 and 5-12 show examples of the use of UPS isolation switches with electronic power switches.

UPS isolation switches may also be used as UPS interrupters as shown in Figure 5-11.

5.4 UPS MAINTENANCE BYPASS SWITCH

The UPS maintenance bypass switch is used to bypass the transfer switch and ensure the continuity of load power. Figures 5-13 and 5-14 show examples of UPS maintenance bypass switches.

5.5 TIE SWITCH

Figures 5-15 and 5-16 illustrate examples of tie switches.

5.6 UPS SWITCH COMBINATIONS

UPS switches can be combined in different ways. In such cases, each UPS switch can perform multiple functions and, therefore, it is not necessary to cascade separate functions.

For example, Figure 5-17 illustrates a parallel redundant UPS with the capabilities of UPS unit interruption and UPS transfer to bypass. If the UPS interrupters are capable of isolation, then they perform the isolation functions for the UPS units. In the transfer switch operation, the UPS interrupters operate in unison.

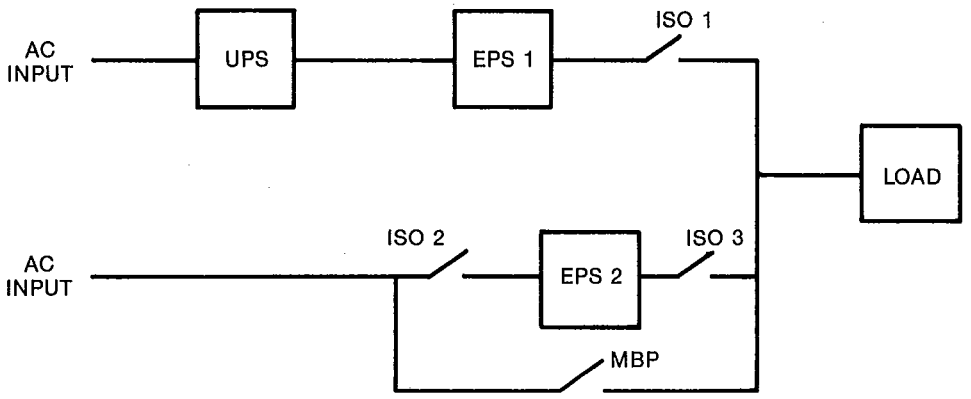

Figure 5-13

Copyright National Electrical Manufacturers Association
Provided by IHS under license with NEMA
No reproduction or networking permitted without license from IHS
Not for Resale

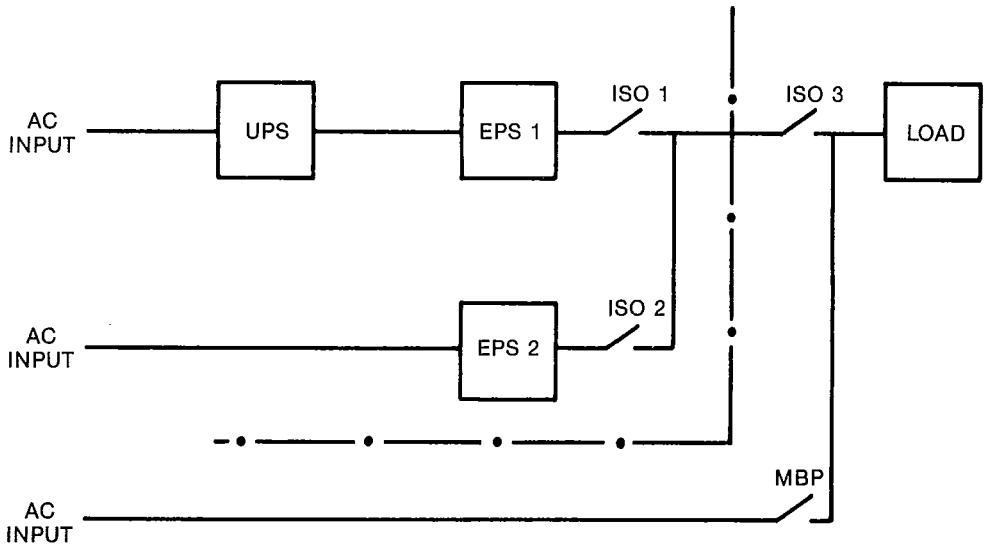

Figure 5-14

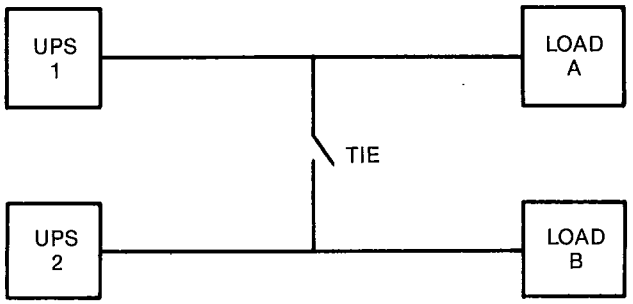

Figure 5-15

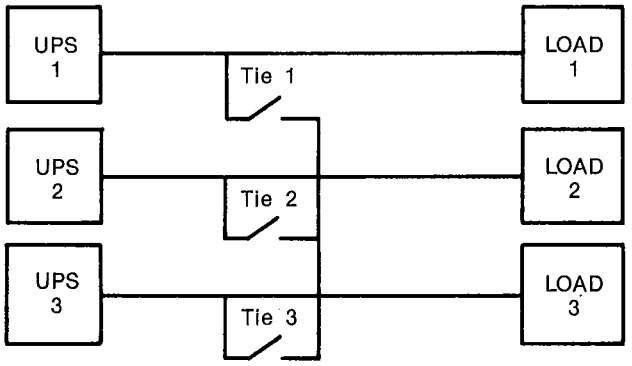

Figure 5-16

Copyright National Electrical Manufacturers Association
Provided by IHS under license with NEMA
No reproduction or networking permitted without license from IHS
Not for Resale

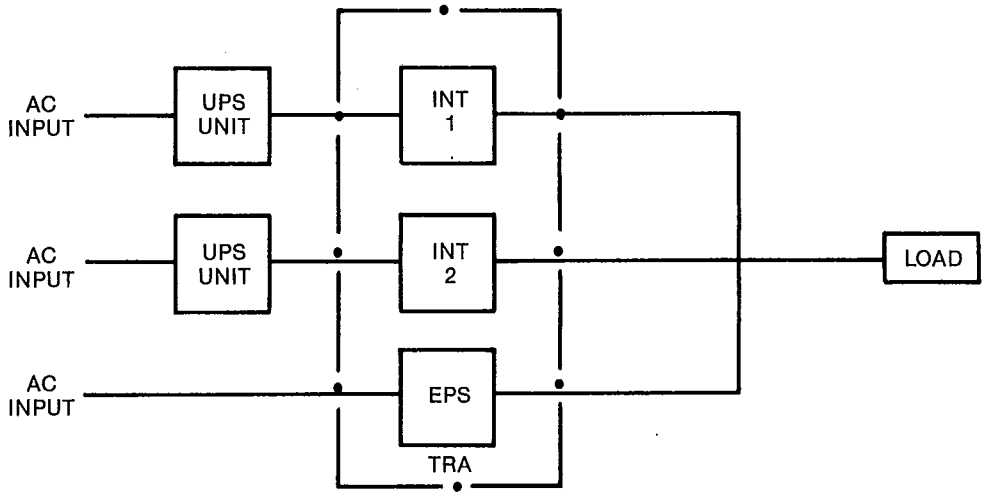

Figure 5-17

Copyright National Electrical Manufacturers Association
Provided by IHS under license with NEMA
No reproduction or networking permitted without license from IHS
Not for Resale

Section 6
SERVICE CONDITIONS FOR UPS SWITCHES

Generally the same conditions which apply to the document *Method of Specifying the Performance and Test Requirements of Uninterruptible Power Systems*, also apply to UPS switches. The references to that document are:

6.1 USUAL SERVICE CONDITIONS

Ref: Clause 5.1.1. In addition to Clause 5.1.1.e, the maximum nonrepetitive peak transient voltage is no more than 2.3 × nominal peak voltage and duration no more than 1.3 milliseconds.

6.2 SERVICE CONDITIONS TO BE IDENTIFIED BY PURCHASER

Ref: Clause 5.2.

6.2.1 Environmental Conditions To Be Identified

Ref: Clause 5.2.1.
5.2.1.q is not applicable.

6.2.2 Mechanical Conditions To Be Identified

Ref: Clause 5.2.2.

6.2.3 Electrical Conditions To Be Identified

6.2.3.1 AC Input to UPS Switch

Ref: Clause 5.2.3.1.

6.2.3.2 Output of UPS Switch

Ref: Clause 5.2.3.2.

6.3 EQUIPMENT PERFORMANCE REQUIREMENTS TO BE IDENTIFIED BY PURCHASER

The following conditions, when they exist, may require unusual construction:

6.3.1 Performance Limitations

Ref: Clause 5.3.1.

6.3.2 Special Performance Requirements

Ref: Clause 5.3.2.

Copyright National Electrical Manufacturers Association
Provided by IHS under license with NEMA
No reproduction or networking permitted without license from IHS
Not for Resale

Section 7
RATED VALUES AND PERFORMANCE

7.1 GENERAL

For UPS switches which are not regarded as integrated parts of a UPS unit such as transfer switches and load transfer switches, the following rated values and characteristics shall be specified by the manufacturer.

Note: Rated values of those UPS switches which are regarded as integrated parts of a UPS unit are matched to the requirements of the UPS and are not stated separately.

If not otherwise specified, the values shall be based on:

1. Usual service conditions
2. Continuous duty

7.2 UPS SWITCH EXCEPT UPS TRANSFER SWITCH

The following rated values shall be specified (if applicable):

1. Voltage and tolerance band
2. Number of poles/number of phases
3. Continuous current capability
4. Short circuit making capability
5. Short circuit breaking capability
6. Overload current capability. Ref: Clause 6.2.1.n
7. Break time
8. Make time
9. Circuit repetitive peak off-state voltage
10. Circuit nonrepetitive peak off-state voltage
11. Leakage current
12. Maximum permissible rate of rise of the off-state voltage
13. Losses at rated load (if not included in the UPS values)

7.3 UPS TRANSFER SWITCH

For each input terminal, the following rated values and characteristics shall be specified.

Per Section 7.2 excluding sub-paragraphs 7) and 8).

In addition, the maximum transfer times for both directions of the transfer switch shall be specified.

Copyright National Electrical Manufacturers Association
Provided by IHS under license with NEMA
No reproduction or networking permitted without license from IHS
Not for Resale

Section 8
TESTING OF UPS SWITCHES

8.1 GENERAL

UPS switches which are regarded as integrated parts of a UPS unit and are matched to the requirements of the UPS are not tested separately, but according to the UPS document. It should be a matter of agreement between manufacturer and purchaser which of the tests should be performed in the factory and which on-site.

Operational tests shall be performed in accordance with IEC 146 where applicable.

1. Insulation—IEC 146-sub-clause 492.1
2. Checking of auxiliary devices—IEC 146-2 sub-clause 5.4
3. Checking of protective devices—IEC 146 sub-clause 492.9
4. Checking of supervising and remote signalling circuits
5. Checking of measuring devices
6. Light load transfer test

In addition to the tests mentioned above, a type test program will include tests to prove the rated values given in Section 7 as far as those values are not proved by adequate calculations. If previous type tests have been performed, the original manufacturer's specifications shall be acceptable and no further tests may be required.

1. A complete functional test, e.g. switching of loads
2. Transfer time test
3. Load test, temperature rise—IEC 146-2 sub-clause 5.5
4. Short time overload—IEC 146-2 sub-clause 5.9
5. Short circuit capability—IEC 146-2 sub-clause 5.10

8.2 TESTING SCHEDULE

Test	Type Test	Routine Test	Optional Test (According to Special Agreement)	Spec.
Interconnection cable check	X	X		8.3.1
Light load test	X	X		8.3.2
Full load test	X		X	8.3.3
On-site ventilation test			X	8.3.4
Overload capability test			X	8.3.5
Short-circuit-current capability				8.3.6
a) Making	X		X	
b) Breaking	X		X	
Overvoltage test				8.3.7
a) Circuit repetitive peak off-state voltage	X			
b) Circuit nonrepetitive peak off-state voltage	X			
Radio frequency interference and conducted noise			X	8.3.8
Audible noise			X	8.3.9
Earth fault			X	8.3.10
Environmental tests			X	8.3.11
Vibration and shock tests			X	8.3.11
Transfer test (if applicable)	X	X		8.3.12

Copyright National Electrical Manufacturers Association
Provided by IHS under license with NEMA
No reproduction or networking permitted without license from IHS
Not for Resale

8.3 TEST SPECIFICATIONS

The following tests when conducted on-site shall use the maximum available load which does not exceed the rated continuous load.

8.3.1 Interconnection Cable Check

The interconnecting cables shall be checked for correct wiring, insulation and the quality of the terminations.

8.3.2 Light Load Test

This test is carried out to verify that the UPS switch is correctly connected and all functions operate properly. The load applied is limited by economical reasons to some percent of rated value. To be checked:

1. Operation of all control switches and other means to put units into operation.
2. Functioning of protective and warning devices.
3. Operation of remote signalling and remote control devices.

8.3.3 Full Load Test

Load tests are performed by connecting a resistive load or the actual load to the UPS switch output.

In particular cases a special load can be used as agreed upon between manufacturer and purchaser.

8.3.4 On-Site Ventilation Test

The test is performed with the actual load or a substitute load. The substitute load must be placed outside of UPS switch area to avoid influences of its dissipated heat upon UPS switch ventilation.

Peak temperatures to be expected can also be calculated from actual and expected or specified values of air inlet and cooling methods applied.

8.3.5 Overload Capability Test

Overload capability test is a load test. Specified values of short time overload or starting up sequences of actual load are to be applied for the time interval specified. Specified values of voltage and current are to be recorded.

8.3.6 Short Circuit Current Capability

If short circuit current capability is specified, it may be tested by application of a short circuit to UPS switch output if necessary, via a suitable fuse. Peak short circuit current is to be recorded in making and breaking.

8.3.7 Overvoltage

1. Circuit repetitive peak off-state voltage shall be tested by increasing the input voltage to the rated value.
2. Circuit nonrepetitive peak off-state voltage shall be tested using suitable generating equipment capable of providing a peak voltage of no more than 2.3 × nominal peak voltage and duration no more than 1.3 milliseconds.

8.3.8 Radio Frequency Interference and Conducted Noise

For radio frequency interference and conducted noise, international and national regulations are applicable (e.g. CISPR standards).

8.3.9 Audible Noise

Test procedure and limits shall be a matter of agreement between purchaser and manufacturer.

8.3.10 Earth Fault Test

If the UPS switch is isolated from earth, then an earth fault can be applied to any terminal. UPS switch transients shall be measured.

8.3.11 Additional Tests

Specifications and procedures for additional tests, e.g., vibration, shock, environmental, drift, shall be a matter of agreement between the purchaser and manufacturer.

8.3.12 Transfer Test

Transients will be measured during rated load transfer to an alternate source caused by a simulated fault and rated load retransfer after clearing of the fault.

Copyright National Electrical Manufacturers Association
Provided by IHS under license with NEMA
No reproduction or networking permitted without license from IHS
Not for Resale

Appendix B
APPLICATION DATA FORM

GENERAL
This form was developed to assist the user in providing the technical and engineering information needed by the manufacturer to comply with the user's requirements.

1. AC INPUT VOLTAGE:
Nominal _____, Maximum _____, Minimum _____
Frequency _____, Hertz _____, _____ phases
Desired input power factor _____%, Conversion efficiency _____%

2. TYPE OF UPS (APPLICATION) (Check appropriate)
( ) a. Single
( ) b. Parallel
( ) c. Redundant
( ) d. Bypass to prime or standby power system
( ) e. ac generator standby power system (if applicable)
( ) f. Required bypass transfer time (if applicable)
( ) g. Other features

3. TYPES OF LOADS TO BE OPERATED FROM UPS
( ) a. Computer
( ) b. Motors
( ) c. Saturating transformer power supplies
( ) d. Diode rectifiers
( ) e. Thyristor rectifiers
( ) f. Switched type power loads _____.
( ) g. Other types of loads.
( ) h. Continuous apparent power and power factor
( ) i. Single and/or three phase loads
( ) j. Inrush currents
( ) k. Start-up procedure
( ) l. Special features of load such as operating duty, unbalance between phases and nonlinearity (generation of harmonic currents)
( ) m. Branch circuit fuse and breaker ratings
( ) n. Maximum step load and load profile

4. UPS OUTPUT
a. Rated output power and power factor _____
b. Nominal output voltage, steady-state and transient tolerance bands _____
c. Nominal output frequency and tolerance band _____
d. Special requirements regarding, e.g., synchronization, relative harmonic content and modulation _____
e. Voltage and adjustability range _____
f. Phase angle tolerance allowed (for three phase) _____

Copyright National Electrical Manufacturers Association
Provided by IHS under license with NEMA
No reproduction or networking permitted without license from IHS
Not for Resale

5. UPS INPUT

For prime power system and (if any) standby power system:

a. Nominal input voltage and voltage tolerance band _____
b. Number of phases _____
c. Nominal input frequency tolerance band _____
d. Special conditions regarding, e.g, superimposed harmonics, transient voltages, supply impedance, etc. _____
e. Limitations regarding e.g. inrush currents, harmonic currents, etc. _____
f. Standby power system rating _____

6. BATTERY

a. Type of battery _____
b. Nominal voltage, number of cells, available ampere hour capacity (if supplied by purchaser) _____
c. Rated stored energy time _____
d. Rated restored energy time _____
e. Presence of other loads on battery and their voltage tolerances _____
f. Availability of separate battery room _____
g. Special requirements regarding, e.g., ripple current _____
h. Temperature of battery room _____

7. GENERAL REQUIREMENTS AND SPECIAL SERVICE CONDITIONS

a. Efficiency at specified load conditions _____
b. Ambient temperature _____
c. Cooling system _____
d. Instrumentation _____
e. Remote control and monitoring system _____
f. Special environmental conditions; equipment exposed to fumes, moisture, dust, salt air, heat, etc. _____
g. Special mechanical conditions; exposure to vibration, shocks or tilting, special transportation or storage conditions, limitations to space or weight _____
h. Performance limitations regarding, e.g., electrical and audible noise _____
i. Galvanic separation required between input and/or dc link and/or output _____
j. Grounding of input and/or d.c. link and/or output _____
k. Maintenance bypass circuits and other installation requirements _____
l. Future extension of the UPS _____

Authorized Engineering Information 11-3-1983.

Copyright National Electrical Manufacturers Association
Provided by IHS under license with NEMA
No reproduction or networking permitted without license from IHS
Not for Resale

September 1984

NEMA STANDARDIZATION

The purpose of NEMA Standards, their classification and status are set forth in certain clauses of the NEMA Bylaws, which are quoted below:

Purpose of Standards

National Electrical Manufacturers Association Standards are adopted in the public interest and are designed to eliminate misunderstandings between the manufacturer and the purchaser and to assist the purchaser in selecting and obtaining the proper product for its particular need. Existence of a National Electrical Manufacturers Association Standard does not in any respect preclude any member or nonmember from manufacturing or selling products not conforming to the standard.

(Bylaw—Art. V, Sec. 1)

Definition of a Standard

A standard of the National Electrical Manufacturers Association defines a product, process or procedure with reference to one or more of the following: nomenclature, composition, construction, dimensions, tolerances, safety, operating characteristics, performance, rating, testing, and the service for which they are designed.

(Bylaw—Art. V, Sec. 2, Subsection A)

Dimensions

Where dimensions are given for interchangeability purposes, alternate dimensions satisfying the other provisions of the standards publication may be capable of otherwise equivalent performance.

(NEMA Policy Memorandum 84-2, dated June 7, 1984)

Classes of Standards

National Electrical Manufacturers Association Standards are of two classes:

1. NEMA Standard, which relates to a product commercially standardized and subject to repetitive manufacture, which standard has been approved by at least 90 percent of the members of the Subdivision eligible to vote thereon;
2. Suggested Standard for Future Design, which may not have been regularly applied to a commercial product, but which suggests a sound engineering approach to future development, which standard has been approved by at least two-thirds of the members of the Subdivision eligible to vote thereon.

(Bylaw—Art. V, Sec. 2, Subsection B)

Authorized Engineering Information

Authorized Engineering Information consists of explanatory data and other engineering information of an informative character not falling within the classification of NEMA Standard or Suggested Standard for Future Design.

(Bylaw—Art. V, Sec. 6, 1st Sentence)

Official Standards Proposal

An Official Standards Proposal is an official draft of a proposed standard which is formally recommended to an outside organization(s) for consideration, comment and/or approval.

(Bylaw—Art. V, Sec. 4, Subsection A)

Identification of Status

Standards in NEMA Standards Publications are identified in the foreword or following each standard as "NEMA Standard" or "Suggested Standard for Future Design." These indicate the status of the standard. These words are followed by a date which indicates when the standard was adopted in its present form by the Association.

The material identified as "Authorized Engineering Information" and "Official Standards Proposal" is

Copyright National Electrical Manufacturers Association
Provided by IHS under license with NEMA
No reproduction or networking permitted without license from IHS
Not for Resale

POWER ELECTRONICS SECTION
OF THE
NATIONAL ELECTRICAL MANUFACTURERS ASSOCIATION

MEMBER COMPANIES

C&D Batteries Division
An Eltra Company
Plymouth Meeting, PA 19462

Cyberex Inc.
Mentor, OH 44060

Dual-Lite, Inc.
Newton, CT 06470

Elgar Corporation
An Onan Power Systems Company
A Subsidiary of McGraw-Edison Company
San Diego, CA 92111

Emerson Electric Company
Industrial Controls Division
Santa Ana, CA 92702

Exide Electronics Corp.
Raleigh, NC 27658

General Electric Company
Power Deliver Division
King of Prussia, PA 19406

GNB Batteries, Inc.
Langhorne, PA 19047

Hobart Brothers Company
Troy, OH 45373

International Power Machines Corporation
Mesquite, TX 75149

La Marche Manufacturing Co.
Des Plaines, IL 60018

Liebert Corporation
Programmed Power Division
Sunnyvale, CA 94086

Pulskota Electric Co.
Worth, IL 60482

Power Conversion Products Inc.
Crystal Lake, IL 60014

Ratelco, Inc.
Seattle, WA 98109

Teledyne Inet
Torrance, CA 90509

Westinghouse Electric Corp.
Buffalo, NY 14240

Copyright National Electrical Manufacturers Association
Provided by IHS under license with NEMA
No reproduction or networking permitted without license from IHS
Not for Resale