NEMA PE*1 92 ■ 6470247 0501909 183 ■

nema

STANDARDS PUBLICATION NO. PE 1

UNINTERRUPTIBLE POWER SYSTEMS

NEMA

NATIONAL ELECTRICAL MANUFACTURERS ASSOCIATION ■ 2101 L STREET, N.W., WASHINGTON, D.C. 20037

Copyright National Electrical Manufacturers Association
Provided by IHS under license with NEMA
No reproduction or networking permitted without license from IHS
Not for Resale

NEMA STANDARDS PUBLICATION NO. PE 1-1992

UNINTERRUPTIBLE POWER SYSTEMS

Published by

National Electrical Manufacturers Association
2101 L Street, NW
Washington, DC 20037
(202) 457-8400

©1992 by National Electrical Manufacturers Association

Copyright National Electrical Manufacturers Association
Provided by IHS under license with NEMA
No reproduction or networking permitted without license from IHS
Not for Resale

TABLE OF CONTENTS

		PAGE
	Foreword	i
	Purpose	ii
	Scope	ii
Section 1	REFERENCED STANDARDS AND DEFINITIONS	
	Referenced Standards	1
	Definitions	3
Section 2	UPS FUNCTIONAL BLOCKS AND CONFIGURATIONS	
	Introduction to UPS and Functional Blocks	9
	Functional Blocks	9
	UPS Configurations Using Single-UPS Units	10
	UPS Configurations Using UPS Units in Parallel	12
Section 3	UPS SWITCHES	
	General	17
	Types of UPS Switches	17
	Application of UPS Power Switches	17
	Rated Values and Performance	21
Section 4	BATTERIES	
	General	23
	Battery Types	23
	Battery Life Factors	23
	Optimum Battery Life	23
	Valve Regulated Batteries	23
	Routine Maintenance	23
	Battery Charging/Discharging	23
	Battery Replacement	23
	Battery Terminal Maintenance	23
	Batteries, Special Safety Handling	24
	Battery Storage	24
	Battery Operation Monitoring	24
Section 5	RATED VALUES AND PERFORMANCE OF UPS	
	General	25
	Values and Characteristics	25
Section 6	TESTING STANDARDS	
	General	31
	UPS Tests	31
	Test Specifications	31
	Test Measuring Methods for Input and Output	34
	Functional Unit Tests	34
Section 7	RECTIFIER/CHARGER TESTS	
	General	35
	Dielectric Test	35
	Voltage Adjustment Test	35
	No-Load Test	35
	Temperature Rise Test	35
	Current-Limit Test	36
	Short-Circuit Test	36
	Voltage Regulation Test	36
	Efficiency Measurement	36
	Power Factor Measurement	36
	Ripple Voltage Measurement	36
	Audible Noise Test	36

Copyright National Electrical Manufacturers Association
Provided by IHS under license with NEMA
No reproduction or networking permitted without license from IHS
Not for Resale

	Surge Withstand Capability Test	37
Section 8	INVERTER TESTS	
	General	39
	Checking of Auxiliary Devices	39
	Temperature Rise Test	39
	Rated Continuous-Load and Light-Load Tests	40
	Audible Noise Test	41
	Output Short-Circuit-Current Test	41
	Output Voltage Unbalance Test	41
	Frequency Modulation	42
	Output Overvoltage Transient	42
	Output Undervoltage Transient	42
	Dielectric Test	42
Section 9	SERVICE CONDITIONS	
	General	43
	Usual Service Conditions	43
	Unusual Environmental Conditions	43
	Unusual Electrical Conditions	44
Section 10	INSTALLATION	
	General Information.	45
	Site Planning	45
	Initial UPS Inspection	45
	Installation	45
	Safety	46
	Battery Location	46
	On-Site Installation and Verification	46
	Unusual Service Conditions	46
	Batteries	46
	UPS Installation Diagrams	46
	Maintenance Plan	46
Section 11	SAFETY	
	Design Standard.	47
	Safe Construction	47
	Operation	48
	Safety Inspection	49
	Maintenance Instructions	49
APPENDIX A	APPLICATION DATA FORM	
	General	51
	User Data	51
	Supplier Data	53

Copyright National Electrical Manufacturers Association
Provided by IHS under license with NEMA
No reproduction or networking permitted without license from IHS
Not for Resale

Foreword

The standards in this publication represent the technical judgement of the Power Electronics Section with respect to the performance and construction of Uninterruptible Power Systems (UPS). These standards are based upon sound engineering principles, research tests, records of manufacturers and field experience. The standards cover both installation and manufacturing criteria obtained from manufacturers and users.

As future major revisions to this publication are proposed, appropriate individuals and organizations will be canvassed.

Publication No. PE 1-1992 revises and reaffirms the content of NEMA Standards Publication for UPS No. PE 1-1983. The unchanged NEMA Standards and Authorized Engineering Information appear in this publication with the original PE 1-1983 date. Those which have been revised are followed by their appropriate classification and the date.

The Power Electronics Section of NEMA, through its members, has worked (and continues to work) closely with such organizations as the American Society for Testing and Materials (ASTM), the Institute of Electrical and Electronics Engineers (IEEE), and Power Systems Support Committee of the Industrial Power Systems Department.

The purpose of this publication is to provide manufacturers and users with definitions, provisions for construction, ratings, a testing schedule, specification outline, and safety considerations of uninterruptible power systems (UPS).

User needs have been considered throughout the development and revision of these standards. The efforts of the members of the Uninterruptible Power System Committee was heightened because of the valuable and appreciated user input from the Government representatives from AT&T, Social Security Administration, and Department of the Navy, Washington Navy Yard. Appropriate government agencies, Underwriters Laboratories Inc., and others will be consulted for any changes necessary to keep them up to date with advancing technology.

Proposed or recommended revisions should be submitted to:

Vice President, Engineering Department
National Electrical Manufacturers Association
2101 L Street, N.W., Suite 300
Washington, D.C. 20037

Copyright National Electrical Manufacturers Association
Provided by IHS under license with NEMA
No reproduction or networking permitted without license from IHS
Not for Resale

Purpose

This NEMA Standards Publication is adopted in the public interest to provide a standard for performance and construction and to assist buyers in selecting and obtaining the proper product for their particular needs.

Recommended safe practices intended to prevent personal injury and property damage arising out of the installation and use of this equipment are covered more completely in other related safety publications such as the Manufacturers Instructions and the National Electrical Code.*

* See 1.1, Referenced Standards

Scope

This Standards Publication covers uninterruptible power systems (UPS) as it applies to semiconductor ac to ac converter systems with a dedicated dc electrical energy storage capability. The primary function of the UPS covered by this technical standard is to provide quality and continuity of an alternating current power source.

This UPS standard can be applied to a UPS that is comprised of semiconductor power converters and rotary power converters (motor-generated sets); however, no technical or application information regarding rotary power converters is included in this publication.

The UPS standard is intended to define a complete Uninterruptible Power System regarding its overall performance and safety and not individual subsystem functional units.

Copyright National Electrical Manufacturers Association
Provided by IHS under license with NEMA
No reproduction or networking permitted without license from IHS
Not for Resale

UNINTERRUPTIBLE POWER SYSTEMS
Section 1
REFERENCED STANDARDS AND DEFINITIONS

1.1 REFERENCED STANDARDS

The following publications are for information purposes and are available from the organizations shown below. It is suggested when ordering those documents that the latest edition be requested.

American National Standards Institute (ANSI)
11 West 42nd Street
New York, NY 10036

Power System

ANSI S1.31-1980(R1986)	*Precision Methods for the Determination of Sound Power Level of Broad Band Noise Sources in Reverberation Rooms*
ANSI S1.36-1979	*Survey Method for the Determination of (R1985) Sound Power*
ANSI S1.4-1983	*Specification for Sound Level Meters*
ANSI/IEEE 32-1972	*Neutral Grounding Devices, Standard Requirements, Terminology and Test Procedure*
ANSI/IEEE C62.41-1980	*Guide for Surge Voltages in Low-Voltage AC Power Circuits (Formerly designated IEEE Std 587-1980)*
ANSI/IEEE C62.45-1987	*Guide on Surge Testing for Equipment Connected to Low-Voltage AC Power Circuits*
ANSI/C84.1-1989	*Voltage Ratings for Electric Power Systems and Equipment (60 Hz)*
ANSI/C92.1-1982	*Insulation Coordination*
ANSI/C92.2-1987	*Power Systems - Alternating-Current Electrical Systems and Equipment Operating at Voltages Above 230 Kilovolts Nominal-Preferred Voltage Ratings*
ANSI/IEEE 100-1988	*Dictionary of Electrical and Electronic Terms*

Storage Batteries

ANSI/IEEE 450-1987	*Practice for Maintenance, Testing, and Replacement of Large Lead Storage Batteries for Generating Stations and Substations*
ANSI/IEEE 484-1987	*Practice for Installation Design and Installation of Large Lead Storage Batteries for Generating Stations and Substations*
ANSI/IEEE 485-1983	*Batteries, Recommended Practice for Sizing Large Lead Storage—for Generating Stations and Substations*

International Electrotechnical Commission (IEC)
(Available from ANSI)

IEC 146-4(1986)	*Methods of Specifying Performance Test Requirements of UPS*
IEC 146-2(1974)	*Semiconductor Self-Commutated Converters*
IEC 364	*Electrical Installations of Buildings*
IEC 364-1 (1972)	*Part 1: Scope, Object, and Definitions*
IEC 364-2 (1970)	*Part 2: Fundamental Principles*
IEC 364-3 (1977)	*Part 3: Assessment of General Characteristics*
IEC 364-4	*Part 4: Protection for Safety*
IEC 364-5	*Part 5: Selection and Erection of Electrical Equipment*
IEC 364-61 (1986)	*Part 6: Verification. Chapter 61: Initial Verification*
IEC 364-7	*Part 7: Requirements for Special Installations or Locations*

Copyright National Electrical Manufacturers Association
Provided by IHS under license with NEMA
No reproduction or networking permitted without license from IHS
Not for Resale

IEC 664 (1980) — *Insulation Coordination Within Low-Voltage Systems Including Clearances and Creepage Distances for Equipment*

IEC 664A (1981) — *First Supplement*

IEC 555-2-1988 — *Disturbances in Supply Systems Caused By Household Appliances and Similar Electrical Equipment Part 2: Harmonics*

IEC 950 — *Data Processing Equipment*

Deutsches Institut for Normung e.V (DIN)
(Available from ANSI)

DIN VDE 0871/06.78-1978 — *Limits of Radio Interference from Radio-Frequency Apparatus and Installations*

DIN VDE 0871 part 1-1985 — *Radio Interference Suppression of Radio Frequency Equipment, for Industrial, Scientific and Medical (ISM) and Similar Purposes*

DIN VDE 0871 part 1-1982 — *Limits and Methods of Measurement of Radio Interference Characteristics of Industrial, Scientific and Medical (ISM) Radio Frequency Equipment*

Institute of Electrical and Electronics Engineers (IEEE)
345 East 47th Street
New York, NY 10017

IEEE 428-1981 — *Definitions and Requirements for Thyristor AC Power Controllers*

IEEE 446-1987 — *Emergency and Standby Power Systems for Industrial and Commercial Applications*

IEEE 493-1980 — *Recommended Practice for Design of Reliable Industrial and Commercial Power Systems*

IEEE 519-1981 — *Guide for Harmonic Control and Reactive Compensation of Static Power Converters*

IEEE 928-1986 — *Terrestrial Photovoltaic Power Systems*

IEEE 944-1986 — *Recommended Practice for the Application and Testing of Uninterruptible Power Supplies for Power Generating Stations*

National Electrical Manufacturers Association
2101 L Street, N.W., Suite 300
Washington, D.C. 20037

NEMA PE 7-1985 (R 1992) — *Communication Type Battery Chargers*

NEMA IB 4-1987 — *Determination of Amperehour and Watthour Capacity of Lead-Acid Industrial Storage Batteries for Stationary Service*

NEMA IB 5-1987 — *Life Testing of Lead-Acid Industrial Storage Batteries (With Free Electrolyte) for Stationary Service*

NEMA MG 1-1987 — *Motors and Generators*

Panelboards and Distribution Switchboards

NEMA PB 1-1990 — *Panelboards*

NEMA PB 1.1-1991 — *General Instructions for Proper Installation, Operation and Maintenance of Panelboards Rated 600 Volts or Less*

NEMA PB 2-1989 — *Deadfront Distribution Switchboards*

NEMA PB 2.1-1991 — *General Instructions for Proper Handling, Installation, Operation and Maintenance of Deadfront Distribution Switchboards Rated 600 Volts or Less*

ANSI Z535.1-1991 — *Safety Color Code*

Copyright National Electrical Manufacturers Association
Provided by IHS under license with NEMA
No reproduction or networking permitted without license from IHS
Not for Resale

ANSI Z535.2-1991 *Environmental and Facility Safety Sign Future Standard*
ANSI Z535.3-1991 *Criteria for Safety Symbols*
ANSI Z535.4-1991 *Product Safety Signs and Labels*
ANSI Z535.5-1991 *Accident Prevention Tags (for Temporary Hazards)*

National Fire Protection Association (NFPA)
Publication Sales Department
Batterymarch Park
Quincy, MA 02269

Handbook-1990 *National Electrical Code Handbook*
ANSI/NFPA 70-1990 *National Electrical Code*

ANSI/NFPA 110-1988
OSHA-29CFR1910 *Emergency and Standby Power Systems*

Underwriters Laboratories Inc.
333 Pfingsten Road
Northbrook, IL 60062

ANSI UL 67-1988 *Panel Boards*
ANSI/UL 840-1990 *Insulation Coordination Including Clearances and Creepage Distances for Electrical Equipment*
ANSI/UL 891-1984 *Dead-Front Switchboards*
ANSI/UL 924-1983 *Emergency Lighting and Power Equipment*
ANSI/UL 1012-1988 *Power Supplies*

Federal Communications Commission
2025 M. Street, N.W. Room 7122
Washington, D.C. 20554

47CFR-Part 15, Subpart B-RFI/EMI-October, 1989

National Technical Information Service
U.S. Department of Commerce/
National Bureau of Standards
Springfield, VA 22161

FIPS PUB 94-1983 *Guideline on Electrical Power for ADP Installations*
(Federal Information Processing Standards Publication)

1.2 DEFINITIONS

Definitions marked with an asterisk(*) are identical to those contained in the IEEE Standard Dictionary of Electrical and Electronics Terms, ANSI/IEEE Std 100-1988. NEMA has obtained reprint permission from IEEE.

AMBIENT TEMPERATURE

The temperature of the medium such as air or liquid in which the UPS operates.

APPARENT POWER*

The product of the root-mean-square current and the root-mean-square voltage.

AUTOMATIC CONTROL

Control of an operation without human intervention, in response to the occurrence of predetermined conditions.

BATTERY

A rechargeable electrochemical energy storage device that when discharged, produces direct-current electrical energy from a chemical reaction and can be recharged by

Copyright National Electrical Manufacturers Association
Provided by IHS under license with NEMA
No reproduction or networking permitted without license from IHS
Not for Resale

reversing the chemical reaction with direct-current electrical energy.

BATTERY CHARGER

A device for changing alternating-current power to direct-current power for the purpose of charging a battery.

BATTERY, VALVE-REGULATED

A battery in which the venting of the products of electrolysis is controlled by a reclosing pressure-sensitive valve.

BATTERY, VENTED

A battery in which the products of electrolysis and evaporation are allowed to escape freely to the atmosphere.

BATTERY END VOLTAGE

The lowest battery voltage at which a UPS may operate.

BREAK-TIME

The interval of time between the initiation of the opening of a UPS switch and the instant when current ceases to flow in the power circuit.

BURN-IN*

The operation of units or systems prior to their ultimate application intended to stabilize their characteristics and to identify early failures.

BYPASS

A power path around one or more functional units of a UPS.

BYPASS POWER

Alternating-current power supplied from an ac input to the ac output via a bypass.

COMMUTATION

The transfer of current between various paths of a circuit.

CONTINUITY OF LOAD POWER

The availability of load power within the limits specified for the load.

CREST FACTOR (periodic functional)*

The CREST FACTOR is the ratio of its crest (peak, maximum) value to its root-mean-square value.

CURRENT LIMIT (control)*

The function that maintains a current within its prescribed value.

DEVIATION

Any departure from a desired or expected value or pattern.

DC LINK

The direct-current power interconnection between rectifier or rectifier/charger and inverter functional units.

DIELECTRIC TESTS*

Tests which consist of the application of a voltage higher than the rated voltage for a specified time to verify the dielectric withstand strength of insulation materials and spacing.

DIELECTRIC WITHSTAND STRENGTH

The specified voltage or potential gradient below which a dielectric material will continue to resist electrical current flow.

DISPLACEMENT POWER FACTOR

The displacement component of power factor; the ratio of the real power of the fundamental wave to the apparent power of the fundamental wave.

DC ENERGY STORAGE SYSTEM

A system consisting of single or multiple devices (typically batteries) designed to provide the required stored energy time.

EFFICIENCY*

The ratio of output power to input power expressed in percent.

ELECTROMAGNETIC INTERFERENCE (EMI)

Unwanted radiated or conducted electric noise, or both.

ELECTRONIC POWER CONVERTER

An electronic device for changing power in one of the following ways:
AC/DC power converters
DC/AC power converters
AC/AC power converters
DC/DC power converters

ELECTRONIC POWER SWITCH

An electronic device which can be controlled to interconnect power circuits.

ENERGY RESTORE TIME

The time required by the energy storage means of the UPS to be charged to provide a second rated stored energy time after providing rated stored energy time.

Copyright National Electrical Manufacturers Association
Provided by IHS under license with NEMA
No reproduction or networking permitted without license from IHS

Not for Resale

FAULT CURRENT AVAILABILITY

The current that can flow in a circuit as a result of a low impedance fault.

FORCED COMMUTATED ELECTRONIC SWITCH

Electronic switch where the commutation is provided by auxiliary circuitry within the electronic switch or by another electronic switch.

FREQUENCY DEVIATION

The cyclic or random variation of instantaneous frequency about a mean frequency during steady-state electrical operating conditions.

HARMONIC DISTORTION

Distortion characterized by the appearance of harmonics in addition to the fundamental component.

HYBRID UPS POWER SWITCH

UPS power switch with mechanical separable contacts in combination with at least one electronic controllable valve device.

INPUT AC

Electric power in the form of alternating current (ac) supplied to the UPS and bypass, or both.

INPUT POWER

The ac power expressed in watts supplied to the ac input terminals of the UPS.

INPUT SOURCE IMPEDANCE

The impedance of the source at the input terminals of the UPS.

INRUSH

A current higher than its steady state value drawn by a device when initially energized or activated.

INTERRUPTING TIME

The interval of time during which the output voltage of a UPS is outside of specified limits during operation or control of the UPS.

INVERTER

An electronic converter used to convert direct current to alternating current.

LINE COMMUTATED ELECTRONIC SWITCH

Electronic switch where the commutation is provided by the reversal of current in the AC power line. Sometimes referred to as naturally commutated electronic switch.

LINEAR LOAD

A load which presents a linear relationship between voltage and current.

LOAD

A device or devices which receives power from the ac output of the UPS.

LOAD SHARING

The simultaneous supplying of power to a load from two or more sources connected in parallel.

LOAD TRANSFER TIME

The time required for the transfer of the load from one power source to another.

MAKE-TIME

The interval of time between the initiation of the closing of a UPS switch and the instant when the current begins to flow in the power circuit.

MANUAL CONTROL

Control of an operation by human intervention.

NON-LINEAR LOAD

A load whose voltage and current relationship is not linear.

NOMINAL VALUE

A common value used to identify a parameter but not necessarily the actual or measured value.

OPERATION

The transfer of a UPS switch from the on to the off state (opening operation) or vice versa (closing operation).

OUTPUT CURRENT

The rms current from the UPS output terminals.

OUTPUT IMPEDANCE

The impedance presented by the UPS output terminals to a load.

OUTPUT POWER

The power expressed in watts delivered to the load by the UPS.

OUTPUT VOLTAGE

The rms voltage (unless otherwise specified for a particular load) at the output terminals of the UPS.

OUTPUT VOLTAGE MODULATION

The cyclic variation of instantaneous voltage about a mean voltage during steady state operation.

Copyright National Electrical Manufacturers Association
Provided by IHS under license with NEMA
No reproduction or networking permitted without license from IHS
Not for Resale

PHASE ANGLE

The angle (usually expressed in electrical degrees) between reference points on one or more ac wave forms.

POWER*

The time rate of transferring or transforming energy.

POWER FACTOR

The ratio of the total real power to the apparent power.

PREFERRED SOURCE

The ac power source that delivers power to the load under normal conditions

PRIME POWER

The power normally continuously available which is usually supplied by electrical utility company but sometimes by the user's own generation.

PULSE

A quantity which departs from a first nominal value, attains a second nominal state and ultimately returns to the first nominal state.

RATING

A value, assigned by a manufacturer, for a specified parameter.

REAL POWER

Power that does work (expressed in watts). The instantaneous product of voltage and current.

RECOVERY TIME

The time interval between a change in a parameter and when the stabilized value of the parameter returns to and stays within the steady state tolerance.

RECTIFIER*

A device for converting alternating-current to direct-current.

RECTIFIER/CHARGER*

A UPS component that changes ac current to dc power to feed either an inverter or a battery or both. Usually implies that the rectifier output voltage is regulated.

REDUNDANT

An intentional repetition of a given function—usually intended to improve reliability.

ROUTINE TEST*

Tests made for quality control by the manufacturer on every device or representative samples, or on parts or materials as required to verify during production that the product meets the design specifications.

SHORT-CIRCUIT OUTPUT CURRENT

The current which flows from the UPS into a zero impedance load.

SLEW RATE (FREQUENCY)

The rate of change of frequency in Hz per second.

SOLID STATE SWITCH

A device that can start or interrupt current flow in an electrical circuit by the use of gated (controlled) semiconductor elements rather than physically moving contacts.

STANDBY POWER

The power intended to replace prime power for the duration of the prime power outage.

STEP LOAD

The instantaneous addition or removal of electrical loads to a power source.

STORED ENERGY TIME

The minimum time that the UPS will provide continuity of rated load power (under specified service conditions starting with a fully charged energy storage means) in the absence of ac input until the energy storage means reaches its specified minimum discharge voltage.

SYNCHRONIZATION

A means by which to achieve the state of synchronism. (The state where ac systems operate at the same frequency with a specified phase-angle displacement.)

TOLERANCE*

The total permissible variation of a quantity from a designated value.

TOTAL HARMONIC DISTORTION

The ratio of the root-mean-square (rms) value of all the harmonics to the root-mean-square value of the fundamental usually expressed in percent.

TRANSFER

Used to denote the switching of a load power from one power source to another.

a. Asynchronous Transfer
   Transfer of the load power between two power sources which are not synchronized.
b. Synchronous Transfer
   Transfer of the load power between two sources which are synchronized.
c. Transfer Time

Copyright National Electrical Manufacturers Association
Provided by IHS under license with NEMA
No reproduction or networking permitted without license from IHS
Not for Resale

The interval of time between the initiation of transfer and the instant the load power is completely transferred from one source to another.

TRANSFER SWITCH

A switch used to transfer a load from one power source to another.

TRANSIENT

A momentary variation, which ultimately disappears.

TYPE TEST*

The performance tests taken on the first machine of each type of design.

UNINTERRUPTIBLE POWER SYSTEM (UPS)

A UPS is a device which provides quality and continuity of an ac power source. All UPS shall maintain some specified degree of continuity of load power for a specified stored energy time upon ac input failure.

UPS SWITCH

A switch (electronic or mechanical) used to connect, interrupt, isolate, or transfer power flow within a UPS or from a UPS.

VARIATION

The change in the value of a quantity from its mean or typical value.

WALK-IN

The initial controlled power increase by the UPS from the ac input.

Copyright National Electrical Manufacturers Association
Provided by IHS under license with NEMA
No reproduction or networking permitted without license from IHS
Not for Resale

Copyright National Electrical Manufacturers Association
Provided by IHS under license with NEMA
No reproduction or networking permitted without license from IHS

Not for Resale

Section 2
UPS FUNCTIONAL BLOCKS AND CONFIGURATIONS

2.1 INTRODUCTION TO UPS AND FUNCTIONAL BLOCKS

An uninterruptible power system (UPS), as described in these standards, is a solid state electronic power system. Its primary function is to provide specified continuity and quality of power to a user's equipment in the event of a partial or total failure of the normal source of power, which is usually the local electric utility. This is accomplished by converting some form of stored energy to supply power to the user's equipment for a specified period of time when the utility is no longer available or acceptable.

The user's equipment, typically referred to as the critical or protected load, may consist of one piece of equipment or may be a room or building full of equipment. It is the equipment that the user has determined needs to be provided with power which has better continuity and quality than that power which is normally available. The critical or protected load is predominately some form of data processing equipment, although it may be other equipment such as lighting, instrumentation, pumps or communication equipment. The stored energy to support this load, usually in the form of batteries, may be needed to supply power to the equipment for a specified time which may be momentary or for many hours. This time interval is commonly referred to as stored energy time, or backup time.

A variety of UPSes have been developed to meet the user's requirements for continuity and quality of power to different types of loads over a wide range of power, from less than one hundred watts to several megawatts. The design concepts and circuit technologies used by UPS manufacturers are not defined in these standard of isolation switches.

These functional building blocks in these standards are described in the following sections.

2.2 FUNCTIONAL BLOCKS

2.2.1 Rectifier/Charger

The rectifier/charger is an electronic power converter that changes ac power to dc power. If the converter is used only to provide energy to the energy storage means, or battery, then the functional building block is termed a charger. If the converter is used only to provide power to an inverter, then the block is termed a rectifier. If the converter is used for both functions, then the block is termed a rectifier/charger. Figure 2-1 illustrates the symbol for this functional block.

2.2.2 Energy Storage Means

The energy storage means is the functional building block that allows the UPS to be uninterruptible and provides energy when the utility, or other primary source of power is not available. It most commonly is a battery, or group of batteries, but may be some other device capable of storing dc energy, such as a capacitor. Figure 2-2 illustrates the symbol for this battery, which will be used to depict this functional block throughout these standards.

2.2.3 Inverter

The inverter is an electronic power converter which changes dc power into ac power. It may be designed to continuously provide power to the critical load from either the battery or rectifier, or it may be designed to provide power to the critical load only when the utility is not providing adequate power. The inverter may be needed to provide power to a load which operates at a different frequency than the utility power. Figure 2-3 illustrates the symbol for an inverter, which will be used to depict this functional block throughout these standards.

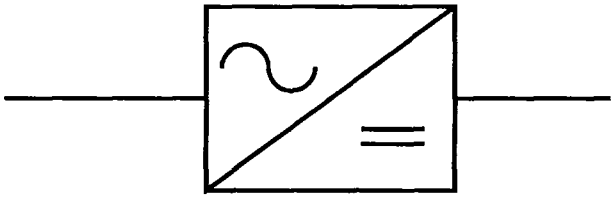

Figure 2-1
RECTIFIER/CHARGER

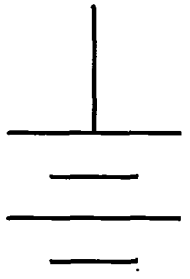

Figure 2-2
BATTERY

Copyright National Electrical Manufacturers Association
Provided by IHS under license with NEMA
No reproduction or networking permitted without license from IHS
Not for Resale

2.2.4 Single Conversion Converter

The single conversion converter is an electronic power converter that supplies controlled ac power to the load while simultaneously maintaining the charge on the battery whenever ac power is available at the input. When

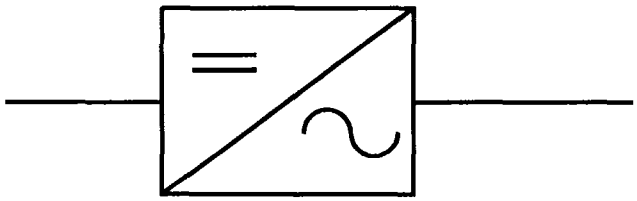

Figure 2-3
INVERTER

specified ac power is not available at the input, the converter supplies ac power to the load using energy from the battery. The significant difference between the single conversion type of UPS is that the single conversion converter converts the input ac power directly to output ac power without first converting to dc power; whereas, rectifier/charger-inverter type of UPS first converts input ac power to dc power and then back to ac power. The rectifier/charger-inverter type of UPS is a double conversion converter. The single conversion converter is also referred to as a "line interactive converter" since the ac input is directly converted to ac output power without first converting to dc power. The single conversion converter is defined in these standards, and its symbol is illustrated in Figure 2-4.

2.2.5 UPS Switches

UPS switches are functional blocks that are used to connect or disconnect various parts of the UPS. The UPS switch may be configured to connect the load to an alternate source of power, or connect the load to the ac input,

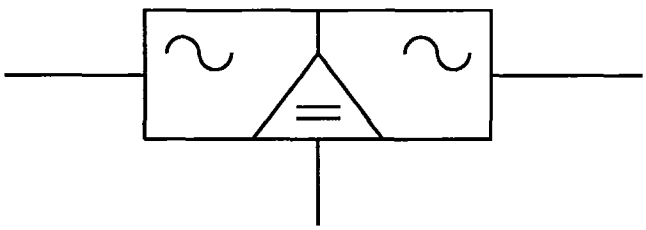

Figure 2-4
SINGLE CONVERSION CONVERTER

bypassing internal functions. This bypassing function may be performed manually or automatically in the event that the UPS fails, and may be performed to allow the typically higher capacity of the utility to start loads with high inrush currents, or momentary overloads. Section 3 describes various UPS switch configurations. Figure 2-5 illustrates the symbol for this functional block.

2.3 UPS CONFIGURATIONS USING SINGLE-UPS UNITS

The functional blocks described in Section 2.2 may be combined into many different configurations, to meet the requirements of the application. Combinations and oper-

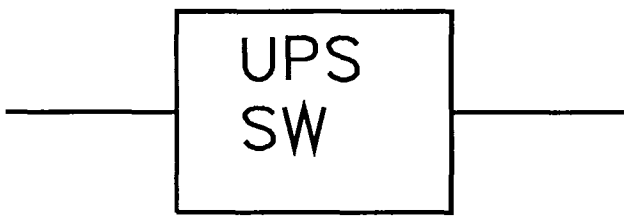

Figure 2-5
UPS SWITCH

ating modes may be selected to provide for expanding loads, to provide redundancy, to take advantage of attributes of different UPS technology, or to meet special load requirements. This section illustrates a few of the more commonly used UPS configurations, and describes their key features.

To understand the different UPS configurations and to facilitate the selection of a UPS suitable for the application, single UPSes are divided into four major groups listed below. Multiples of these single-UPS units can be combined to provide increased capacity, or redundancy, as described in Section 2.4.

Group 1—Rectifier-Inverter Configurations without bypass.

Group 2—Rectifier-Inverter Configurations with bypass.

Group 3—Single Conversion Converter Configurations without bypass.

Group 4—Single Conversion Converter Configurations with bypass.

Copyright National Electrical Manufacturers Association
Provided by IHS under license with NEMA
No reproduction or networking permitted without license from IHS
Not for Resale

2.3.1 Group 1—Rectifier-Inverter Configurations, Without Bypass

Group 1 includes configurations that consist of a rectifier/charger, inverter, and battery, but do not have bypass capability. UPSes in this group are suitable for frequency converters, or as part of a larger system that consists of multiple units with overall bypass capability. To service the UPSes with no bypass capability, power to the critical load would generally have to be interrupted. With no bypass, this type of UPS can supply an output frequency and voltage that is independent of the ac input. The functional block diagram for this type of UPS is shown in Figure 2-6. A simplified symbol that is functionally equivalent is shown in Figure 2-7.

2.3.2 Group 2—Rectifier-Inverter Configurations, With Bypass

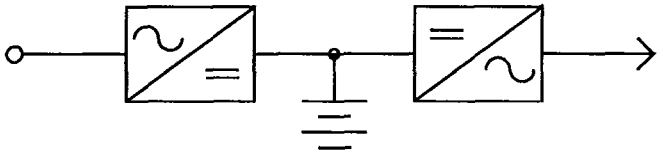

Figure 2-6
RECTIFIER INVERTER UPS WITHOUT BYPASS

Group 2 includes configurations that consist of a rectifier/charger, inverter, and battery, as in Group 1, and a UPS switch used as a bypass is included. This bypass switch allows power to be supplied to the load directly from the

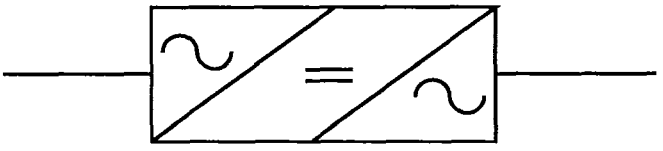

Figure 2-7
SIMPLIFIED SYMBOL RECTIFIER INVERTER

utility input or from an alternate power source in the event that the UPS fails, or for maintenance, or to supply load inrushes. In order for this type of system to function, the bypass power must be at the same nominal frequency, phase and voltage as supplied to the load by the inverter. To accomplish this compatibility, transformers and synchronizing circuitry may be utilized.

Using the same functional blocks, this type of UPS can be designed to operate in one of two different modes. In one mode, power is normally supplied to the load via the rectifier-inverter, and the bypass power is utilized only temporarily for specific purposes. This mode is commonly referred to as "on-line" operation. In the second mode, power is normally supplied to the load via the bypass switch and the inverter is utilized whenever the bypass input power is unsuitable to power the load. This mode of operation is commonly referred to as "off-line" operation.

The bypass input may also be supplied by another UPS unit, to provide power of desired continuity and quality if the inverter of the first UPS unit fails.

The functional block diagram for this type of UPS is shown in Figure 2-8.

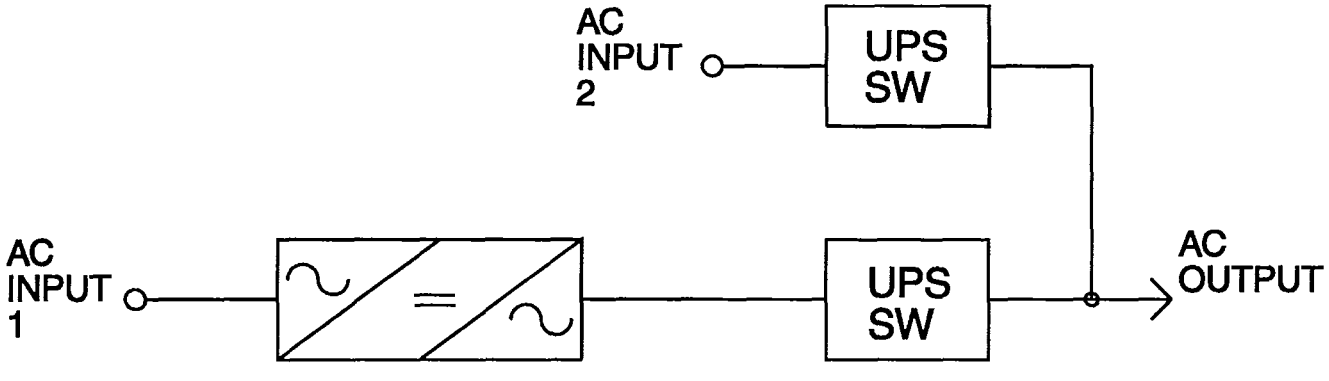

Figure 2-8
RECTIFIER INVERTER UPS WITH BYPASS

Copyright National Electrical Manufacturers Association
Provided by IHS under license with NEMA
No reproduction or networking permitted without license from IHS
Not for Resale

2.3.3 Group 3—Single, Conversion Converter Configurations, without Bypass

Group 3 includes configurations that consist of the single conversion converter without bypass capability. This functional block is described in 2.2.4 and includes a battery. The functional symbol for single conversion converter configuration, without bypass is shown in Figure 2-4. For single conversion converter configuration, without bypass to function, the nominal output frequency has to be the same as the utility input. Transformers or other regulating devices may be used to match the input voltage to the required output. The single conversion converter configuration, without bypass may be designed so that power is still supplied to the load from the utility even though the inverter function has failed, thus a degree of redundancy may be provided. In a single conversion converter configuration, without bypass, the inverter function may operate at its full rating or at a fraction including zero of the UPS rating during normal operation.

2.3.4 Group 4—Single Conversion Converter Configurations, with Bypass

Group 4 includes configurations that consist of the single conversion converter with an independent bypass capability. Group 4 is distinct from the systems in group 3 in that it has independent bypass capability. The functional block diagram for this UPS is shown in Figure 2-9.

2.4 UPS CONFIGURATIONS USING UPS UNITS IN PARALLEL

There are two basic reasons to parallel UPS units. One is to supply more power than a single-UPS configuration is capable of supplying, this is defined as "parallel for capacity." The other reason is to supply continuity of power if one or more of the UPS units in a system fails, this is defined as "parallel for redundancy."

As with single-UPS unit configurations, parallel UPS units may be supplied with bypass capabilities, or they may be operated as frequency converters with battery backup. In parallel systems that have bypass capability, the bypass frequency and phase has to be the same as the UPS output. Transformers may be used to match the input voltage to the required output voltage. Parallel UPSes are typically used for larger systems, and often additional UPS switches are provided to isolate portions of the system for maintenance while the remainder of the system is supplying the load.

2.4.1 Parallel UPS for Capacity

Parallel-for-capacity configuration consists of more than one single-UPS unit of configuration 2.3.1 or 2.3.3, placed in parallel to supply higher capacity loads. The parallel combination of UPS units is considered a single UPS and the ac outputs of all the units are connected to a common point. The battery inputs may be connected to a single battery, or the individual units may have separate batteries. Examples of this configuration are shown in Figure 2-10 (A–D).

A parallel-for-capacity configuration may also consist of one or more single-UPS unit rectifier/charger of Figure 2-1, connected with an unequal number of one or more inverters of Figure 2-3 placed in parallel to supply higher capacity loads. The resulting combination is treated as one single-UPS unit and is considered to be functionally equivalent to Figure 2-10(A–D).

2.4.2 Parallel UPS for Redundancy

A parallel-for-redundancy configuration usually consists of more than one single-UPS unit placed in parallel with their ac outputs connected to a common point. Each single-UPS unit is designed such that the remaining units are capable of supplying the load if one single-UPS unit fails or is disconnected from the system. Each single-UPS

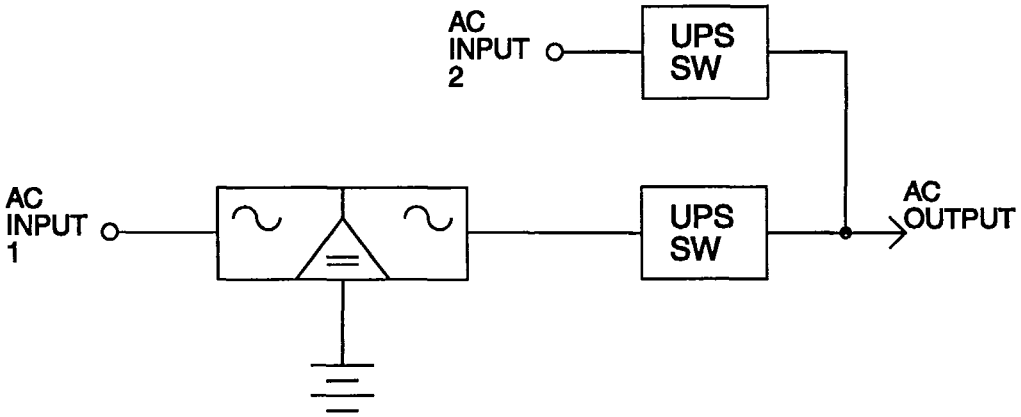

Figure 2-9
SINGLE CONVERSION CONVERTER UPS WITH BYPASS

Copyright National Electrical Manufacturers Association
Provided by IHS under license with NEMA
No reproduction or networking permitted without license from IHS
Not for Resale

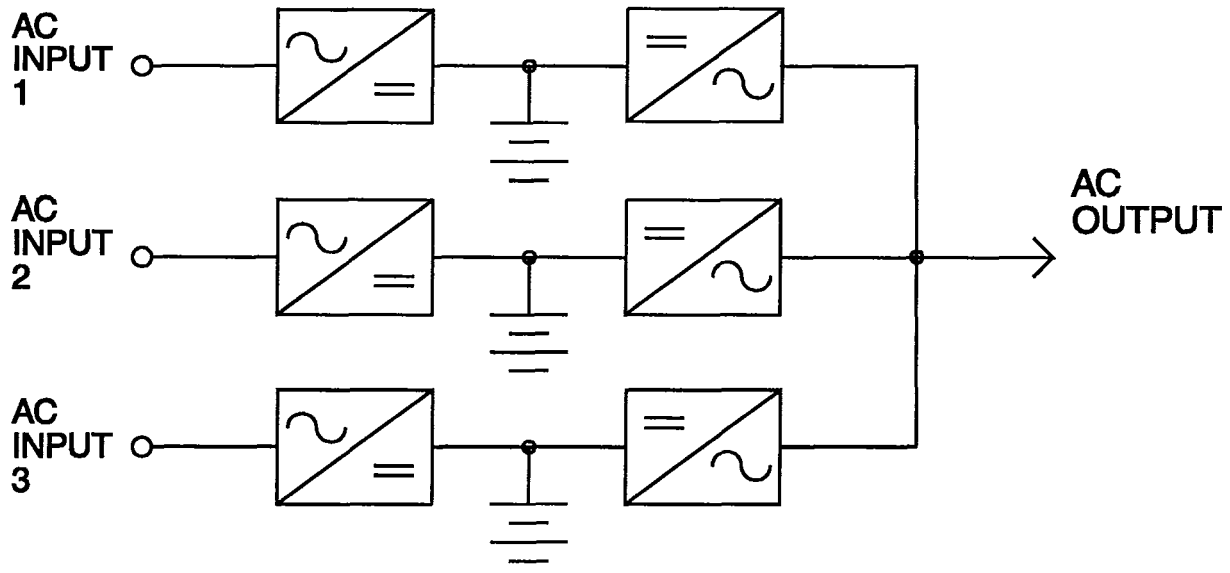

Figure 2-10A
PARALLEL UPS FOR CAPACITY

unit has to have a disconnect function or means such that if one unit fails, that unit can not interfere with the other unit or units in maintaining the specified continuity of load power. An example of this configuration is shown in the block diagram Figure 2-11.

A parallel-for-redundancy configuration may also consist of more than one single-UPS unit rectifier/charger of Figure 2-1, connected with an unequal number of inverters of Figure 2-3 placed in parallel. The functional blocks are designed such that the remaining units are capable of supplying the load if one rectifier/charger, or inverter fails or is disconnected from the system. Each functional unit has to have a disconnect function or means such that if any one unit fails, that unit cannot interfere with the other units in maintaining the specified continuity of load power. An example of this configuration is shown in Figure 2-11.

In addition, an added level of redundancy may be provided by supplying a bypass capability. Inputs 1, 2, and 3 of Figure 2-11 may be the same or different. Redundant input power may be provided to the UPS by separate utility sources or a alternate generator.

Copyright National Electrical Manufacturers Association
Provided by IHS under license with NEMA
No reproduction or networking permitted without license from IHS
Not for Resale

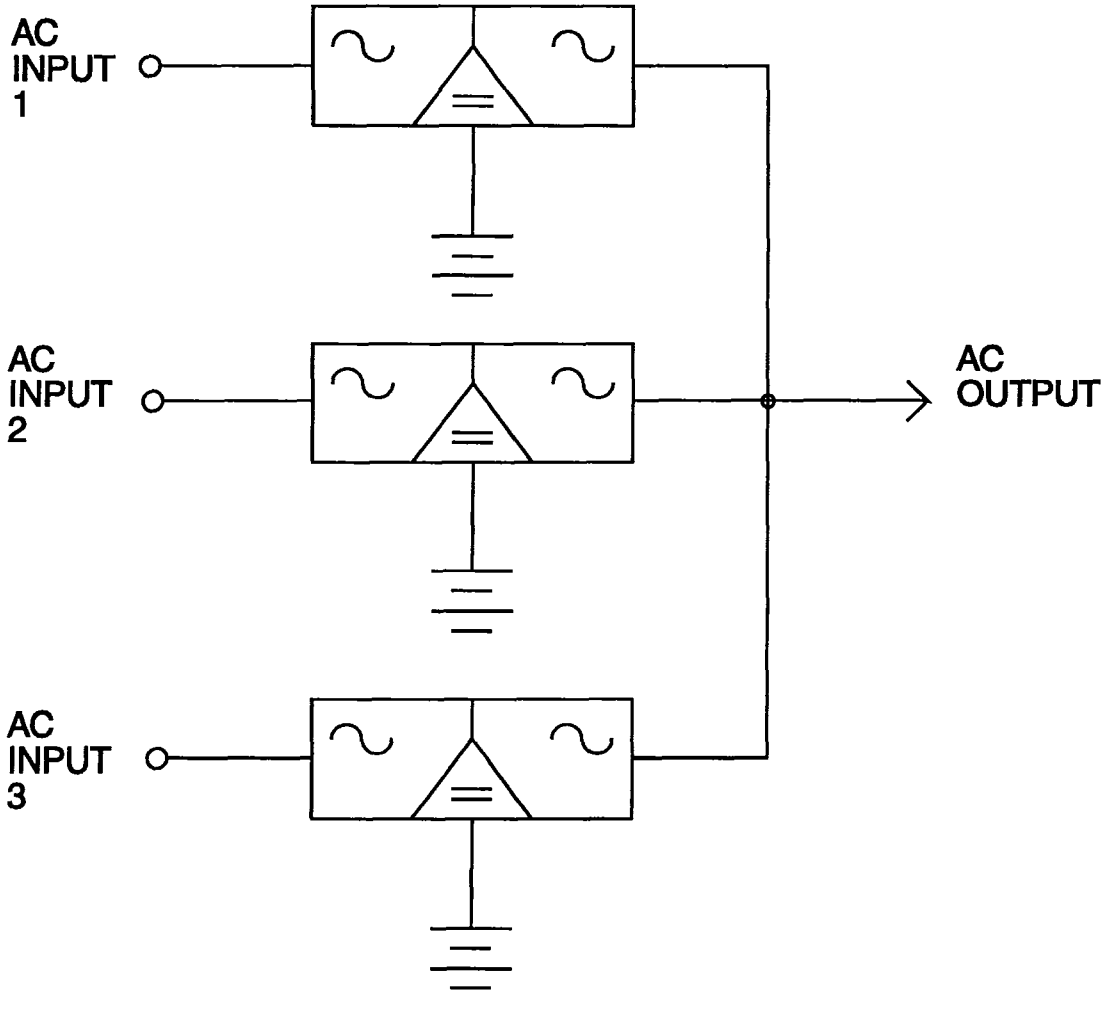

Figure 2-10B
PARALLEL UPS FOR CAPACITY

Copyright National Electrical Manufacturers Association
Provided by IHS under license with NEMA
No reproduction or networking permitted without license from IHS
Not for Resale

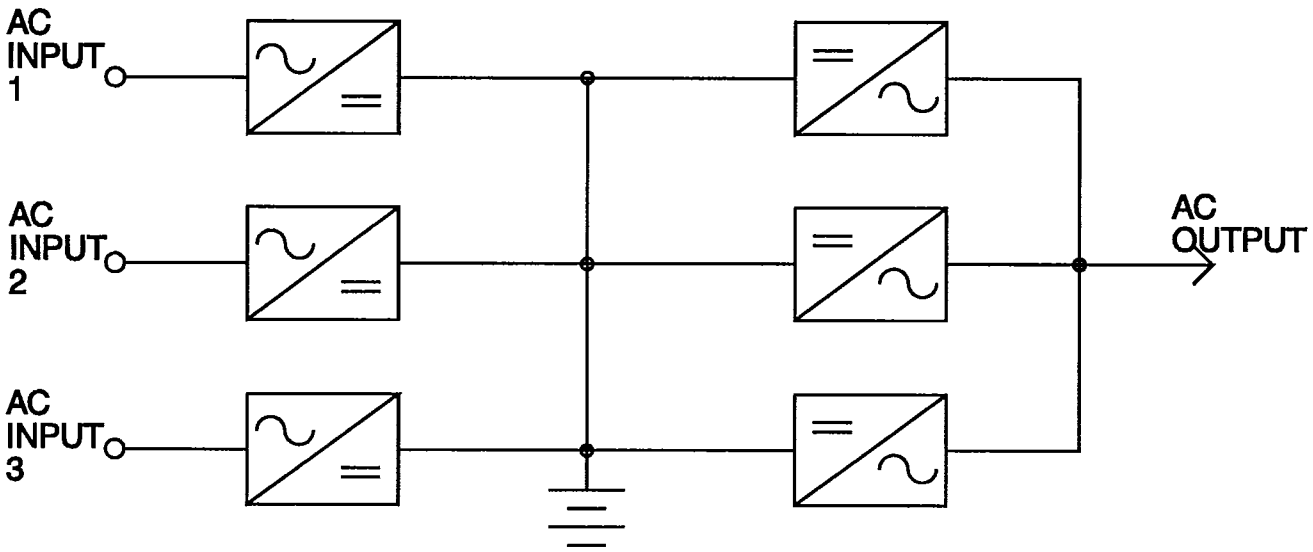

Figure 2-10C
PARALLEL UPS FOR CAPACITY

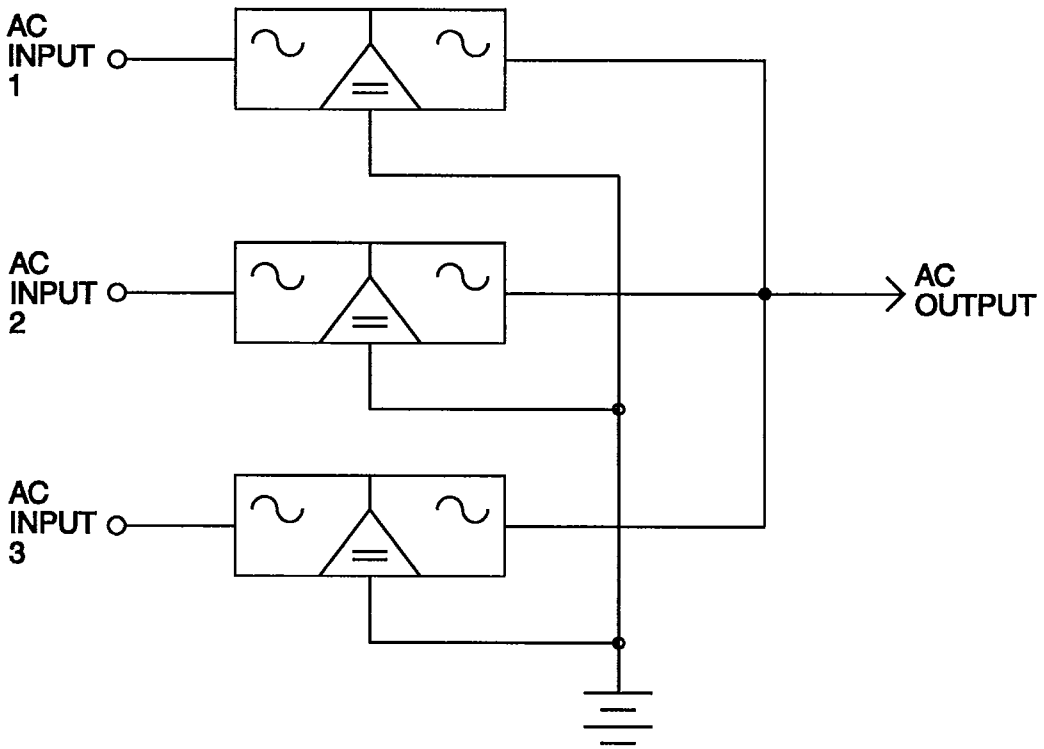

Figure 2-10D
PARALLEL UPS FOR CAPACITY

Copyright National Electrical Manufacturers Association
Provided by IHS under license with NEMA
No reproduction or networking permitted without license from IHS

Not for Resale

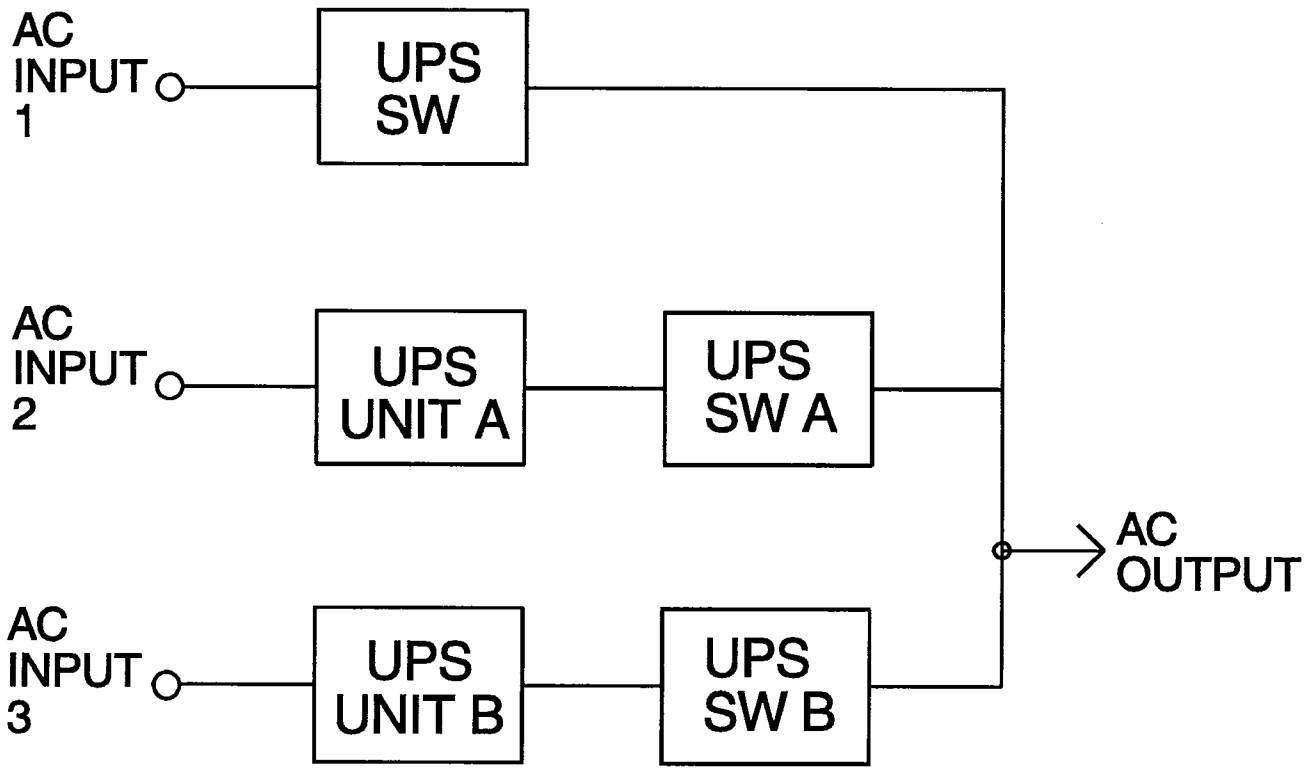

Figure 2-11
PARALLEL UPS FOR REDUNDANCY WITH BYPASS

Copyright National Electrical Manufacturers Association
Provided by IHS under license with NEMA
No reproduction or networking permitted without license from IHS
Not for Resale

Section 3
UPS SWITCHES

3.1 GENERAL

The term UPS switches applies to all power switches that form functional units of a UPS and are associated with its application. Included are interrupters, bypass switches, isolating switches, load transfer switches, and tie switches. These switches interact with other functional units of the UPS to maintain continuity of load power. Other switches or breakers, such as conventional main distribution boards, rectifier input switches, battery disconnect switches, or other general purpose breakers or switches that are used for convenience or safety are not included in this discussion.

The information in this section is intended to provide description of types of UPS switches, their general characteristics, and common applications.

3.2 TYPES OF UPS SWITCHES

The design and construction of UPS switches range from the basic manually operated breaker or switch to systems that include solid state switches, motor operated breakers, and automatic controls. The following paragraphs give a brief description of commonly used UPS switches.

3.2.1 Manual Breaker Or Switch

Manually operated breakers or switches are single or multi-pole units that are typically standard commercially available devices suitable for a wide range of voltage and current applications. The devices are often provided with auxiliary features such as isolated contacts for remote signaling and electrically operated trip capability. A switch and fuse combination may be used in place of a thermal magnetic breaker.

3.2.2 Electrically Operated Breaker Or Switch

The manual breakers and switches described in 3.2.1 can be outfitted with motor or solenoid operators so that the switches can be turned on and off by application of motor power and electrical control signals. Auxiliary features described in 3.2.1 are also provided.

3.2.3 Contactors

Contactors are solenoid operated switches provided with single or multiple poles and a wide range of current and voltage ratings. Auxiliary features such as isolated contacts are commonly provided.

3.2.4 Solid-State Switch

A solid-state switch, sometimes referred to as a static switch because it has no moving parts, is comprised of a semiconductor power switching devices(s) in each line to be switched. The switches are commonly arranged in three-pole configurations for three-phase applications. The principal reason for using a solid-state switch instead of equivalent mechanical devices is because of the superior switching speed, which can be used effectively in switching power flow in a UPS system without significant interruption of power. The switch is operated electronically.

If the solid-state switch is to be used for continuous duty applications, cooling may be needed to dissipate the thermal losses of the switching devices.

3.2.5 Hybrid Switches

The hybrid UPS switch is a combination of electronic and mechanical UPS switches. A most common configuration consists of a solid state switch in parallel with a motor operated breaker. The electronic switch provides fast response time and the parallel breaker provides low-loss continuous duty.

3.3 APPLICATION OF UPS SWITCHES

UPS switches are used in conjunction with UPS in many configurations and a number of examples of commonly used configurations are shown in the following paragraphs. For simplicity, the UPS switches are shown in diagrams as separate units, but in practice, a UPS switch may be an integral part of a UPS unit.

The following paragraphs describe common UPS switch applications.

3.3.1 UPS Switches Used As Interrupters

UPS switches used as interrupters are on/off switches in series with UPS units.

Figure 3-1 shows an interrupter used to disconnect a load from a UPS output. In some UPS designs, the UPS inverter itself is used as a UPS interrupter. In that case, the inverter is designed to act as an impedance to power flow.

Figure 3-2 shows UPS interrupters used in a parallel redundant UPS to connect or disconnect UPS to or from a common bus. The interrupters enable operating units to remain connected to the load while a failed unit is instantly isolated from the load without significant disturbance of load power.

3.3.2 UPS Transfer Switches

A UPS transfer switch consists of a combination of two or more UPS switches used to transfer a load from one power source to another. Depending on the design and

Copyright National Electrical Manufacturers Association
Provided by IHS under license with NEMA
No reproduction or networking permitted without license from IHS
Not for Resale

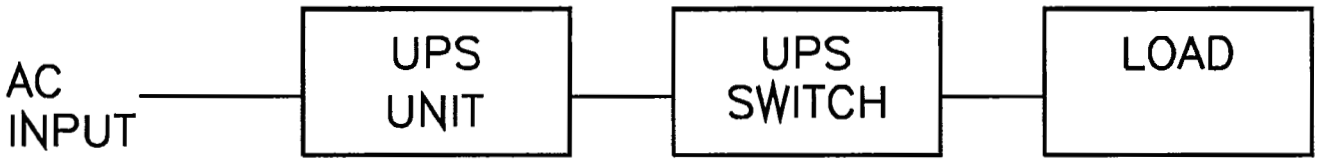

Figure 3-1
SINGLE-UPS UNIT WITH INTERRUPTER

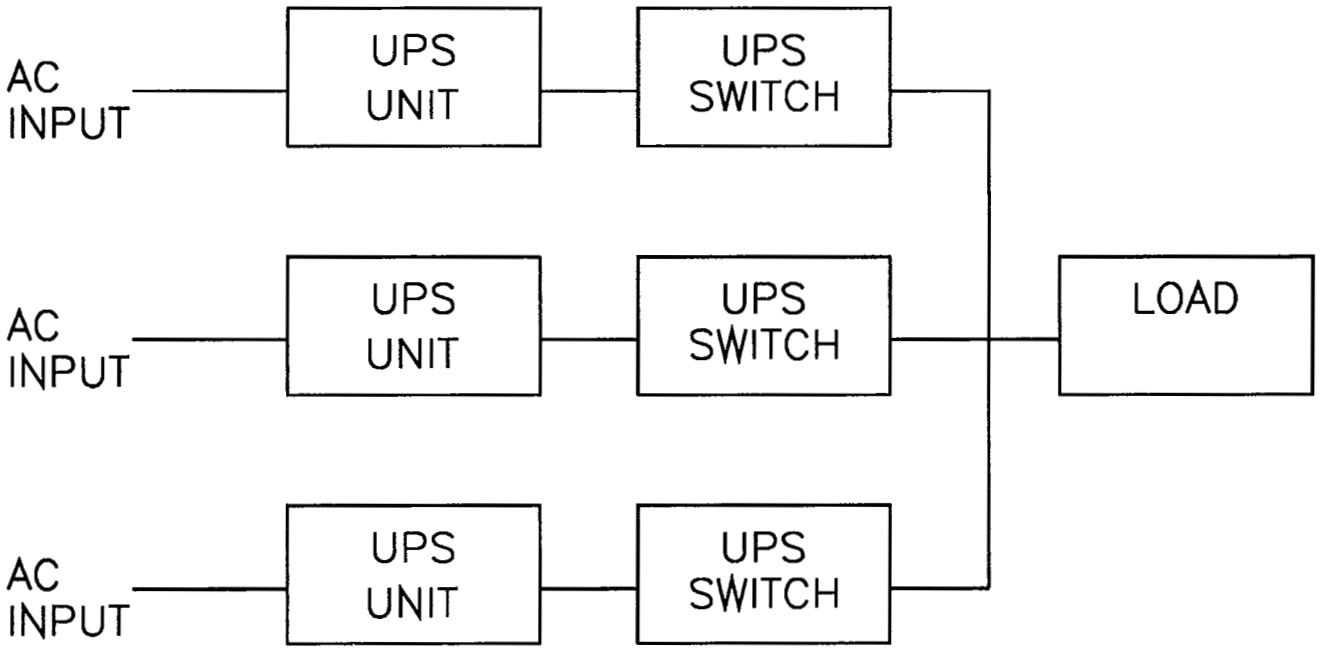

Figure 3-2
PARALLEL UPS UNITS WITH INTERRUPTERS

application, the transfer of power can be switched manually or automatically either with or without interruption of power to the load.

Since transfer switches are made up of the different types of UPS switches, the transfer switches will exhibit different characteristics. Each type has different characteristics such as transfer time, continuous current and overcurrent rating, isolation of input and output, and either continuous or intermittent duty. Mechanical switches may be used where ruggedness and isolation are important; solid state switches may be used where fast response and electronic control are desired; and hybrid switches may be used where the fast response of solid state switches is required but the ruggedness and isolation capability of mechanical switches are needed.

Transfer switches may be used in case of:

a. Peak loads exceeding UPS inverter rating
b. Providing load power during UPS maintenance
c. Load current surges or transients (load inrush currents or fault clearing currents)
d. UPS functional unit failure.

Depending on application, UPS transfer switches may be operated to provided synchronous or asynchronous transfer.

Figure 3-3 shows the use of a UPS transfer switch to transfer the load between a UPS unit output and an ac input. The ac input to the UPS and the ac input to the

Copyright National Electrical Manufacturers Association
Provided by IHS under license with NEMA
No reproduction or networking permitted without license from IHS
Not for Resale

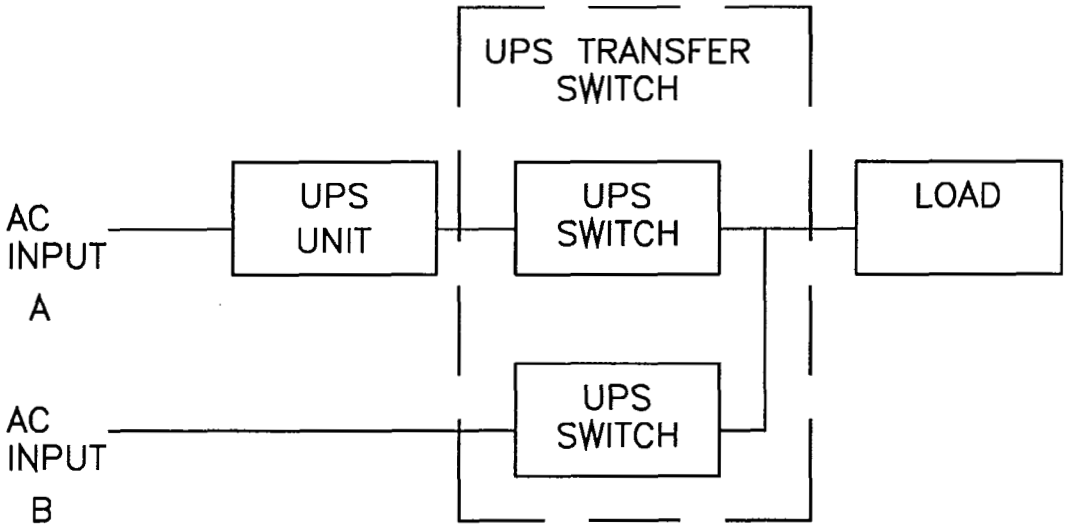

Figure 3-3
UPS UNIT WITH TRANSFER SWITCH

transfer switch (inputs A and B) may be the same power source. Since this configuration allows the load to be connected to the ac input whereby the UPS is bypassed, this configuration is often referred to as a UPS unit with bypass.

This configuration of the transfer switch provides a variety of control options:

a. If mechanical switches are used primarily to isolate the UPS unit for maintenance, the transfer switch (and UPS) may be designed so that both switches may be on simultaneously, allowing the load to be transferred without interruption. Otherwise, one switch should be opened before the other is closed, thus causing a load power interruption.

b. In case of momentary overload, the alternate ac input switch can be closed momentarily to augment the UPS. The switch in series with the UPS unit may be opened momentarily or may remain closed so that the momentary overload is shared between the UPS and the alternate ac input.

c. The UPS unit can be operated in a mode whereby power normally flows to the load from the alternate ac input, but when the ac input fails, the UPS supplies the load.

d. In case of sustained or continuous UPS unit overload, load power may be provided via the bypass switch until the situation is corrected.

e. In case of UPS unit failure, the load may be transferred to the alternate ac input until the UPS unit is repaired.

3.3.3 UPS Unit Isolation Switches

UPS isolation switches may be used as auxiliary parts of UPS systems and UPS switches to provide total isolation from power sources for maintenance purposes. Mechanical switches are used for isolation to provide safety. Figure 3-4 shows a common use of isolation switches.

3.3.4 UPS Maintenance Bypass Switch

The UPS maintenance bypass switch is used not only to provide isolation but also to ensure continuity of load power. Figure 3-5 shows an example of a UPS maintenance bypass switch.

3.3.5 Tie Switches

UPS tie switches may be used to connect two or more UPS units or loads in such a way to provide operating flexibility especially in redundant or partially redundant systems. Figure 3-6 shows a typical use of UPS tie switches.

3.3.6 UPS Switch Functional Combinations

UPS switches can be combined in different ways. Each UPS switch can perform multiple functions and it is not necessary to cascade separate functions. For example, if a UPS interrupter is capable of performing the isolation function, only one switch need be included in the design. The types of classification of switches and their applications given in this section is meant to be a guide and not a rigid classification.

3.4 RATED VALUES AND PERFORMANCE

For UPS switches which are not regarded as integral parts of a UPS, the following rated values and characteristics may be specified by the manufacturer. The rated

Copyright National Electrical Manufacturers Association
Provided by IHS under license with NEMA
No reproduction or networking permitted without license from IHS
Not for Resale

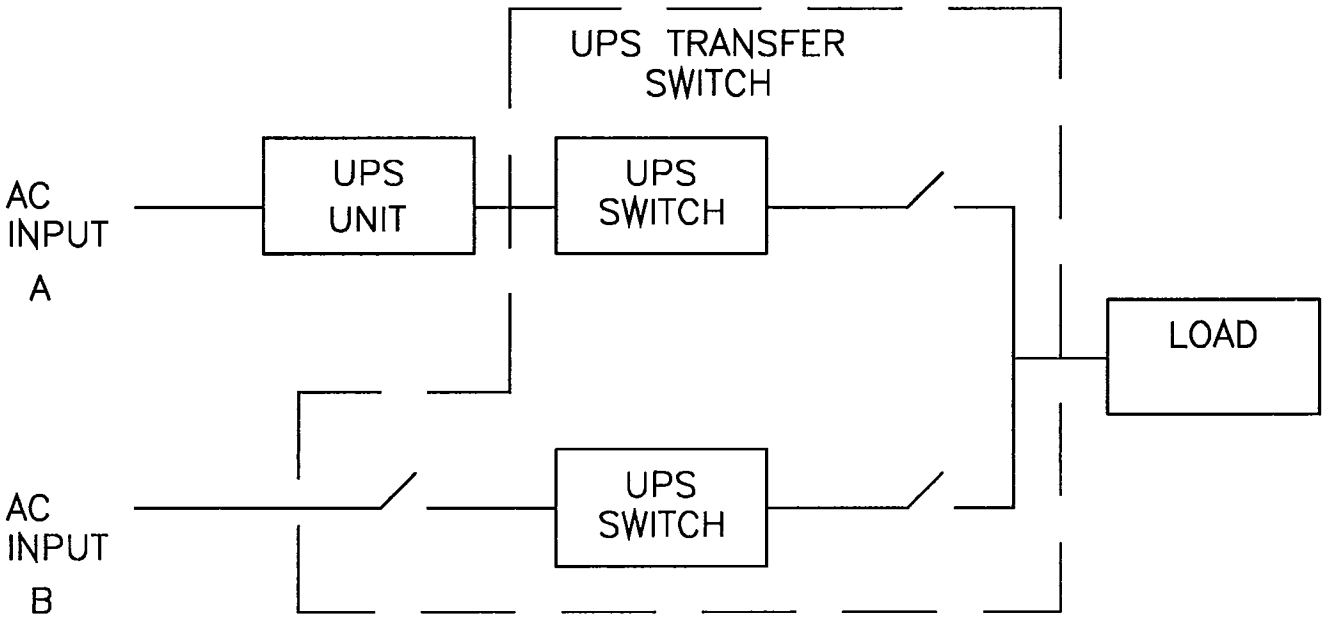

Figure 3-4
UPS UNIT WITH ISOLATION SWITCHES

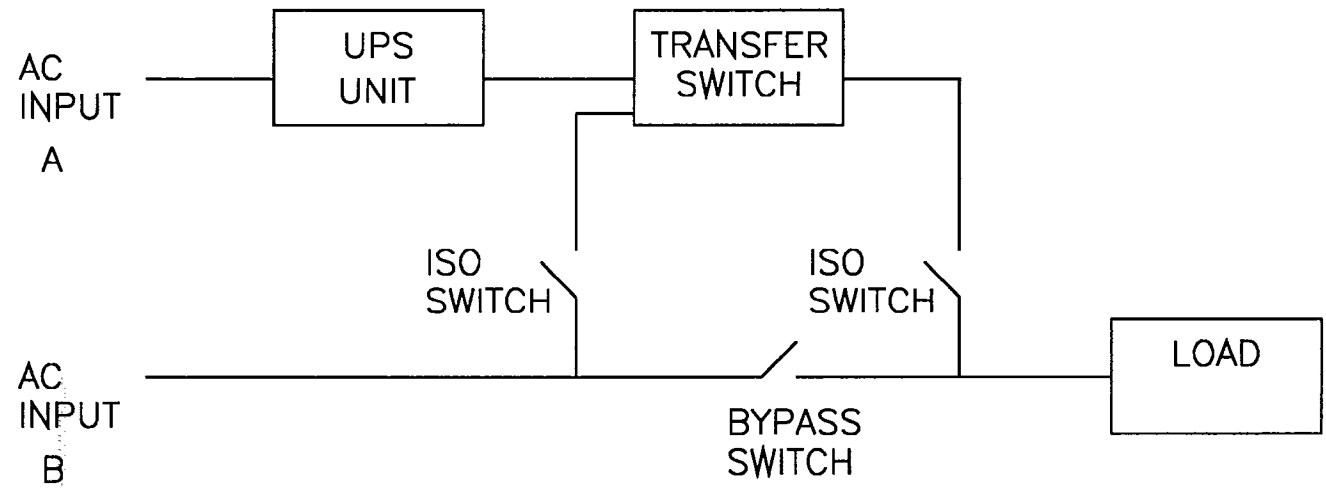

Figure 3-5
UPS UNIT WITH MAINTENANCE BYPASS SWITCH

Copyright National Electrical Manufacturers Association
Provided by IHS under license with NEMA
No reproduction or networking permitted without license from IHS
Not for Resale

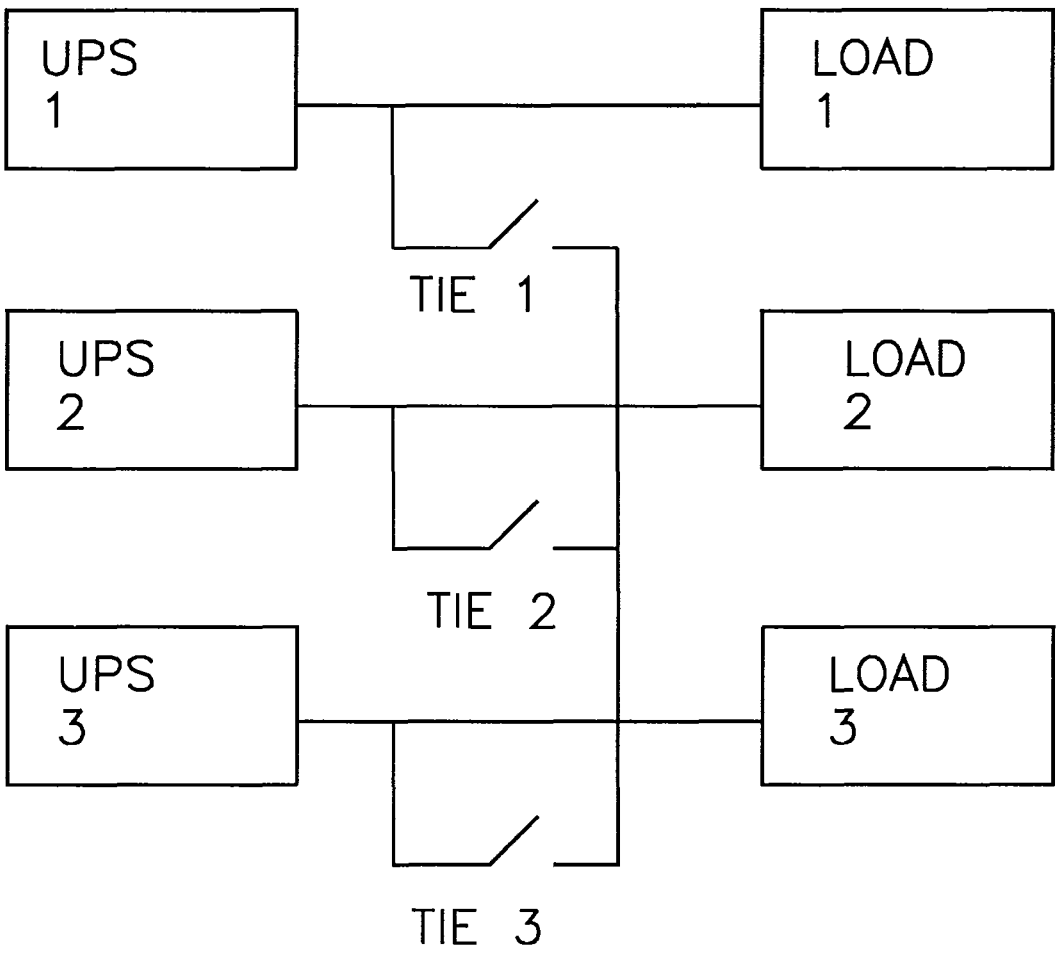

Figure 3-6
UPS UNITS WITH TIE SWITCHES

values of those UPS switches which are regarded as integral parts of a UPS are matched to the requirements of the UPS and are not specified separately. However, the following ratings can be used to identify critical requirements of UPS switches within an integrated UPS.

Rated Values (if applicable)

a. Voltage, minimum and maximum
b. Number of poles/number of phases
c. Continuous current capability
d. Cooling requirements (or losses at rated load)
e. Intermittent current rating
f. Maximum current at turn-on
g. Maximum current at turn-off
h. Overload current capability
i. Break time
j. Make time
k. Overlap time or interrupt time (for transfer switches)
l. Repetitive peak off-state voltage
m. Non-repetitive peak off-state voltage
n. Off-state leakage current
o. On-state voltage drop
p. Maximum permissible rate of rise of off-state voltage

Copyright National Electrical Manufacturers Association
Provided by IHS under license with NEMA
No reproduction or networking permitted without license from IHS
Not for Resale

Copyright National Electrical Manufacturers Association
Provided by IHS under license with NEMA
No reproduction or networking permitted without license from IHS

Not for Resale

Section 4
BATTERIES

4.1 GENERAL

In UPS applications, the battery is the device which may be used to store electrical energy by chemical conversion, (CHARGING) and when needed, the battery provides the stored energy to power the load (DISCHARGING). Since the load side of a UPS is ac, an inverter changes the direct current from the battery to alternating current.

For more detailed information on batteries, refer to NEMA documents IB-4, IB-5, IB-8, IB-10, and the battery manufacturer's recommendations.

4.2 BATTERY TYPES

Many types of batteries are used in UPS applications. The most common is the lead-acid battery and its derivatives.

Other types of batteries, such as Nickel Cadmium, may be used in some applications. Refer to UPS supplier's data for specific recommendations. The two most common constructions are valve regulated and vented.

4.3 BATTERY LIFE FACTORS

The useful life of a battery may be affected by many factors:

a. The specific gravity or pH of the electrolyte
b. The depth of discharge
c. The rate of discharge
d. The ripple current
e. The float voltage
f. The temperature differential between cells
g. The non-operating storage temperature
h. The number of discharge cycles
i. The rate of charge
j. The temperature of the battery
k. Overcharge.

4.4 OPTIMUM BATTERY LIFE

The manufacturer's specifications should be carefully followed. Incorrect charging or discharging can destroy a battery very quickly (possibly within hours or days). Many cycles of excessive discharge can drastically reduce a battery's expected life.

4.5 VALVE REGULATED BATTERIES

Sometimes valve regulated (sealed) batteries are referred to as maintenance free batteries incorporating oxygen recombination systems, absorbed electrolyte, or gelled electrolyte technologies.

These batteries require routine maintenance as recommended in 4.6, if rated performance is to be achieved. A maintenance free battery is one in which routine addition of water is not necessary. These batteries are designed to vent when their internal pressure becomes sufficiently high. Excessive overcharging, which results in venting, will eventually dry out the battery and shorten its useful life.

4.6 ROUTINE MAINTENANCE

Routine maintenance includes inspection of cables, connectors and termination tightness, and terminal cleanliness. It may be necessary to periodically disassemble the cable connections from the battery, clean the terminals of corrosion, and reconnect the cables. Extreme care is urged when performing this operation. High voltages may be present. In every case, the manufacturer's instructions should be followed.

Battery maintenance should be performed only by qualified personnel. Battery maintenance information can be supplied by the battery manufacturer.

Battery systems should be designed to allow for routine maintenance.

4.7 BATTERY CHARGING/DISCHARGING

Batteries shall be charged according to specifications prescribed by the manufacturer. Recharging the battery at too high a rate can reduce battery life.

The charging system in a UPS shall provide the necessary charging rate and control the maximum charging voltages. The discharge shall be inhibited when the battery has reached its minimum allowable terminal voltage. Consult the UPS supplier before changing to another size or type of battery.

Excessive battery equalizing and excessive equalizing voltage can decrease battery life. Battery equalizing shall only be done as recommended by the battery manufacturer.

4.8 BATTERY REPLACEMENT

When battery replacement is required, it shall not be undertaken without consulting the UPS manufacturer's recommendations. Batteries of different types and capacities shall not be mixed unless authorized by the UPS manufacturer.

4.9 BATTERY TERMINAL MAINTENANCE

Terminals should be kept clean and free of chemical deposits which may form on the interface between the battery terminal and the battery connector.

Nuts and other hardware should only be tightened to the torque level prescribed by the manufacturer. Loose con-

Copyright National Electrical Manufacturers Association
Provided by IHS under license with NEMA
No reproduction or networking permitted without license from IHS
Not for Resale

nections and/or excessive tightening can cause premature failure of the battery. Prior to assembly of post connections, all surfaces should be cleaned in accordance with the battery manufacturer's directions, and surfaces coated with a corrosion inhibiting material that will not change state under heating or other conditions that might form an insulating barrier.

All post-to-post and terminal connections should be tested for proper resistance after all terminal connections are completed and prior to use of the battery.

When working on the electrical connections to the batteries, insulated tools should be used.

4.10 BATTERIES, SPECIAL SAFETY HANDLING

Batteries should be handled with extreme care or they may cause severe injury. Spilled electrolyte may destroy clothing, burn skin, or cause blindness. Batteries should be serviced only by a qualified technician.

CAUTION—Always wear goggles and rubber gloves when working with batteries.

Always wear eye protection, and never smoke when in the vicinity of vented lead-acid batteries. The gasses vented are hydrogen and oxygen, a potentially explosive mixture.

If electrolyte gets into the eyes, flush with copious amounts of water and seek medical help immediately.

Batteries should be used and stored in an upright position unless they have been designed for all-attitude use.

4.11 BATTERY STORAGE

Batteries normally self-discharge if left unattended for a long period of time.

Lead acid batteries should be stored in a charged condition, otherwise sulfation of the plates occurs, which is often an irreversible failure of the batteries. Suggested storage temperature range is 0 to 25°C, or in accordance with manufacturer's recommendations.

4.11.1 Battery Storage for Long Periods of Time

When lead acid batteries are to be stored for long periods of time, it is advisable to keep them on a very low rate of trickle charge, in accordance with the battery manufacturer's recommendations. When such trickle charging is impractical, the batteries may be charged periodically.

4.12 BATTERY OPERATION MONITORING

A battery monitoring system may be implemented for each bank of batteries to obtain a history of the operation of the battery system, and to assist in battery evaluation.

Copyright National Electrical Manufacturers Association
Provided by IHS under license with NEMA
No reproduction or networking permitted without license from IHS
Not for Resale

Section 5
RATED VALUES AND PERFORMANCE OF UPS

5.1 GENERAL

The rated values and performance of a UPS listed herein describe the UPS operating at the usual service conditions listed in Section 9. Refer to Appendix A to establish technical and engineering information needed by the UPS user and supplier.

These rated values and performances shall be measured at the input and output terminal of the UPS.

Refer to Appendix A for a comprehensive checklist of performance and application issues that should be considered by the UPS user.

5.2 VALUES AND CHARACTERISTICS

5.2.1 Preferred kVA Ratings

Table 5-1 lists the preferred output rating of UPS. Manufacturers may provide ratings in between and beyond those listed and comply with all other requirements of this standards publication.

5.2.2 Preferred Voltage Rating

The preferred input and output voltages are listed in Table 5-2. For other services conditions, see Section 9. Manufacturers may provide ratings in between and beyond those listed and comply with all other requirements of the Standard Publication.

5.2.3 Rated Values

Table 5-3 lists the rated values of the UPS. All load ratings are based on linear loads.

Table 5-1
PREFERRED UPS OUTPUT RATINGS (kVA)

Single Phase	Three-Phase
0.1	10
0.15	15
0.2	20
0.25	30
0.3	37.5
0.35	
0.4	50
0.5	75
0.60	
0.75	100
1.0	125
1.5	150
2.0	175
2.5	200
3	225
4	250
5	300
7.5	350
10	400
	450
15	500
20	625
	750
	1000

Table 5-2
NOMINAL INPUT OR OUTPUT VOLTAGES (VOLTS AC)

120
208
240
277
480
575

Copyright National Electrical Manufacturers Association
Provided by IHS under license with NEMA
No reproduction or networking permitted without license from IHS
Not for Resale

Table 5-3
RATED VALUES OF THE UPS

Characteristics	Values	NEMA Standard Class*
INPUT		
Minimum Power Factor at rated load**		
Rating (kVA)	**Power Factor**	
0.1 –1	0.60	
>1 –10	0.65	
>10 –30	0.70	NEMA Standard
>30 –100	0.75	
>100 –300	0.80	
>300 –1000	0.85	
Input Current Limit (Maximum battery recharging and/or maximum outout overload)	125% of normal full load input current (the value for this characteristic is typical)	Authorized Engineering Information
Walk-In:** If applicable (optional)	Increasing from 25% normal full load current to maximum current in 2 to 20 seconds	Authorized Engineering Information
Maximum Peak Inrush Current**	10 times the normal peak full load input current	NEMA Standard
Input Current Total Harmonic Distribution (THD)**		
Rated (kVA)	**THD (optional)**	
>0–20	30%	
>20–200	15%	
>200	10%	Authorized Engineering Information
OUTPUT		
Steady state voltage regulations for no load to rated load and minimum to maximum dc voltage (Battery)†		
Rating (kVA)	**Maxium Output Voltage Variations**	
0.1–20	+ 5%, - 10%	
>20–1000	æ 2%	NEMA Standard

Copyright National Electrical Manufacturers Association
Provided by IHS under license with NEMA
No reproduction or networking permitted without license from IHS
Not for Resale

Table 5-3 (CONTINUED)
RATED VALUED OF THE UPS

Output Voltage Total Harmonic Distortion (THD)		
Rating (kVA)	**Maximum THD for rated linear load (optional)**	
≤2	10%	
>2	5%	NEMA Standard
Overload Capacity		
Rating (kVA)	**Overload**	
0.1 –2	No overload	
>2 –10	125% load for 5 min.	
>10	125% load for 10 min.	NEMA Standard
Output Frequency (Non-Synchronized)		
Rating (kVA)	**Frequency Avration**	
0.1–2	±1 Hz	
>2	± 0.5 Hz	NEMA Standard
Output Frequency Slew Rate††	1 Hz/Sec. maximum	NEMA Standard
Power Factor Capability	Minimum 0.7	NEMA Standard
Phase Displacement (for 3-phase UPS)		
Balanced Linear Loads—	120°±2°	
50% Unbalanced Linear Loads—	120°±4°	NEMA Standard
Voltage Unbalance (for 3-phase UPS)		
Balanced Linear Loads—	± 2%	
50% Unbalanced Linear Loads—	± 4%	NEMA Standard
OVERALL SYSTEM		
Efficiency (for rated linear load)	See Fig. 5-1 for minimum levels	NEMA Standard
Voltage transients due to any dynamic change in operating conditions	See Fig. 5-2 for maximum levels	NEMA Standard
Audible Noise	See Fig. 5-3 for maximum levels (see NEMA MG 1-1987)	NEMA Standard

*See NEMA Standardization Page for explanation of NEMA Standard Classes.

**In the case of a type of UPS that normally supplies the load directly from the ac input, the value is determined by the load and this value does not apply.

† In the case of a type of UPS that normally supplies the load directly from the ac input defined in section 9.2.

†† In the case of a type of UPS that normally supplies the load directly from ac input, the value is determined by the load and this value does not apply.

Copyright National Electrical Manufacturers Association
Provided by IHS under license with NEMA
No reproduction or networking permitted without license from IHS
Not for Resale

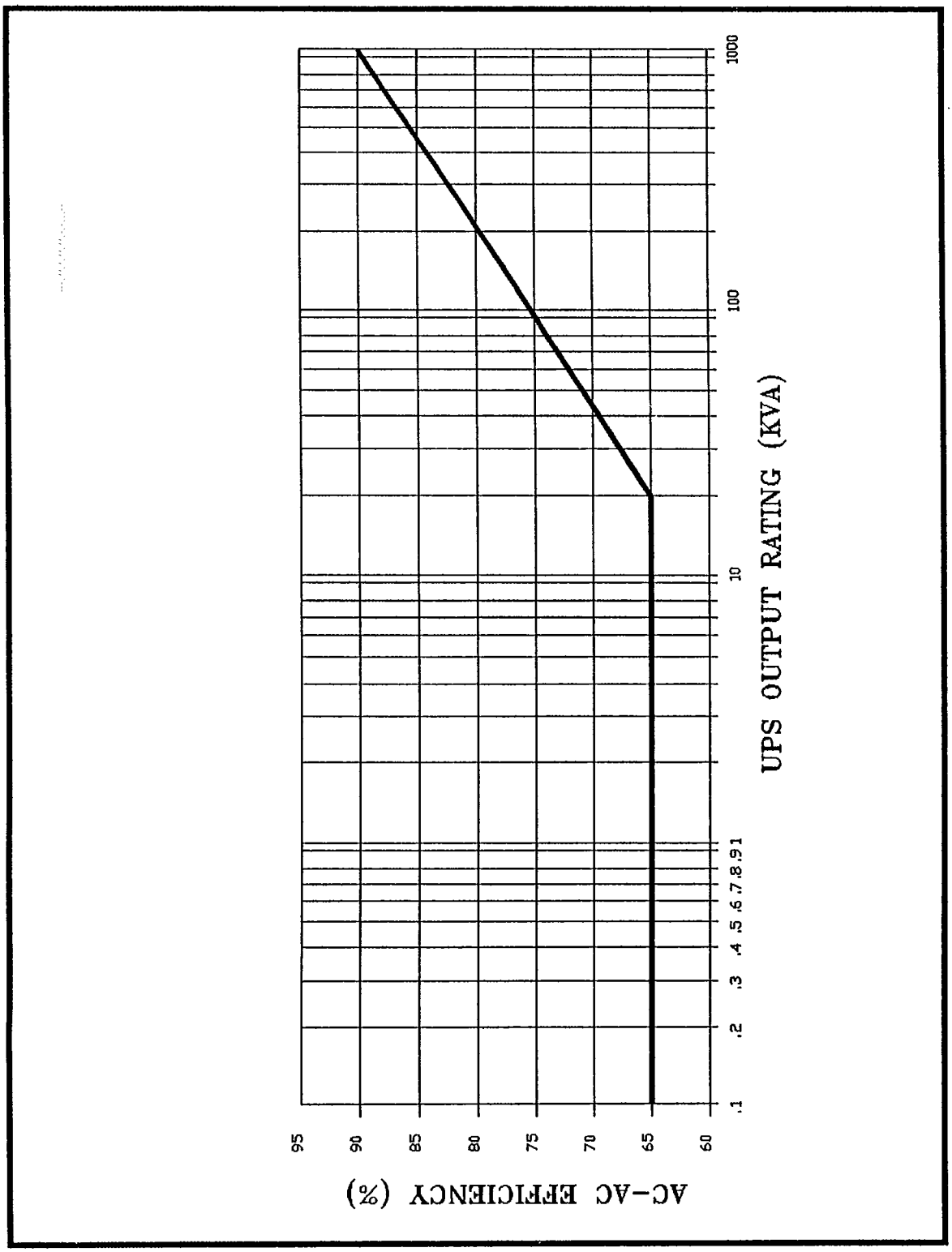

Figure 5-1
EFFICIENCY FOR RATED LINEAR LOAD

Copyright National Electrical Manufacturers Association
Provided by IHS under license with NEMA
No reproduction or networking permitted without license from IHS
Not for Resale

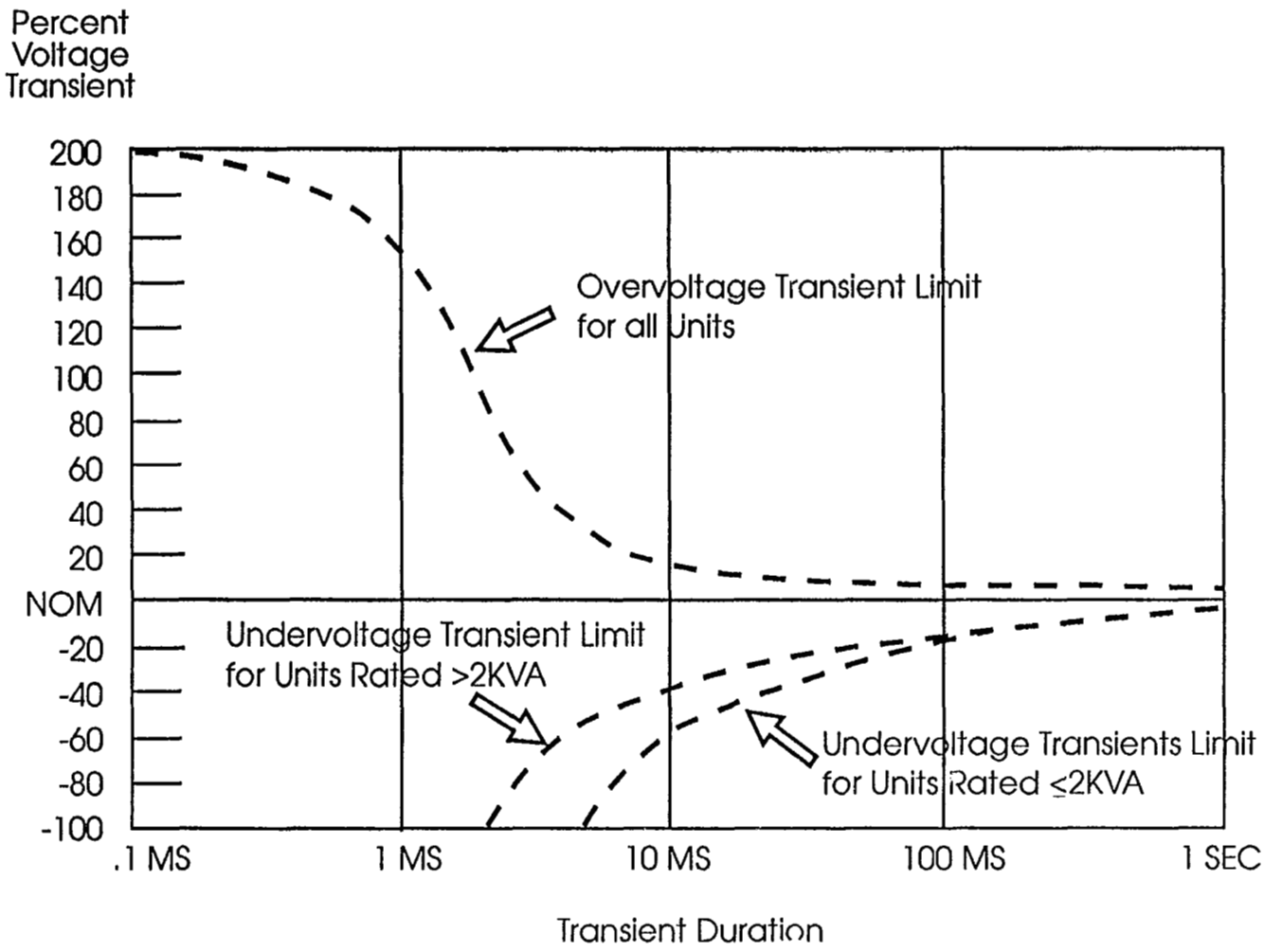

NOTE: The percent overvoltage or undervoltage is derived from the ratio of the RMS of the voltage deviation from the nominal voltage sinewave, for the time indicated, to the RMS value of the nominal ac voltage.

Figure 5-2
OUTPUT VOLTAGE TRANSIENT LIMITS

Copyright National Electrical Manufacturers Association
Provided by IHS under license with NEMA
No reproduction or networking permitted without license from IHS
Not for Resale

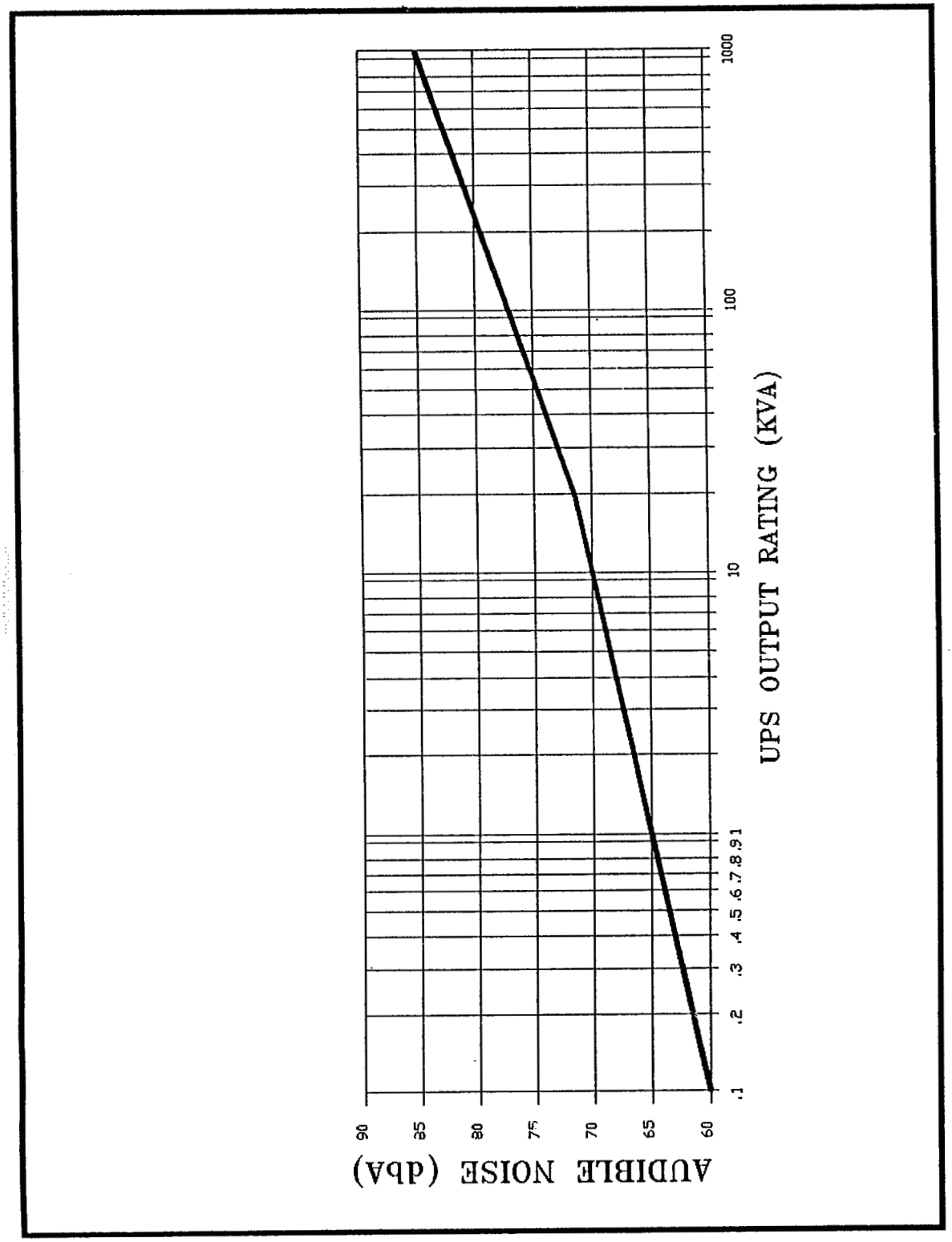

Figure 5-3
OVERALL SYSTEM AUDIBLE NOISE

Copyright National Electrical Manufacturers Association
Provided by IHS under license with NEMA
No reproduction or networking permitted without license from IHS
Not for Resale

Section 6
TESTING STANDARDS

6.1 GENERAL

Equipment may be type and routine tested in the factory as a complete UPS. Less extensive operational tests with batteries and load may be performed on site. Alternatively, routine tests in the factory may be restricted to UPS functional units or combinations of such. The final test on site then replaces the UPS routine factory test. The test shown in Table 6-1 may be performed in any order.

6.2 UPS TESTS

UPS testing shall be performed after wiring of the functional units to form a complete UPS either at the factory or at the installation site. (See Table 6-1.)

6.3 TEST SPECIFICATIONS

The tests 6.3.1 through 6.3.8, when conducted on-site, shall use the maximum available load which does not exceed the rated continuous load:

a. With and without bypass, where appropriate
b. With and without redundancy, where appropriate

All other tests shall be conducted with full rated linear load.

6.3.1 Light Load Test

This test shall be performed to verify that the UPS is correctly connected and all functions operate properly. The following tests shall be performed (with and without ac input):

a. Output voltage and frequency
b. The operation of all control switches, meters, and other means required to determine proper UPS operation.

6.3.2 UPS Auxiliary Device(s) Test

The functioning of UPS auxiliary devices, such as lighting, cooling, pumps, fans, annunciators, shall be verified in conjunction with the light load test, or during another test if it is more convenient.

6.3.3 Synchronization Test

This test shall be performed when synchronization to an external source is required. Frequency variation limits shall be tested by use of a variable frequency generator or by simulation of circuit conditions. While synchronized, the phase angle between bypass source and inverter shall be measured and checked against manufacturers' acceptable limits.

This test may be performed during another test if it is more convenient.

6.3.4 Frequency Slew Rate

This test shall be performed to determine the output frequency rate of change.

6.3.5 AC Input Failure Test

The test shall be performed, with a battery or other appropriate dc source, by interrupting the ac input power or shall be simulated by switching off all UPS rectifiers and bypass feeders at the same time. Output voltage variations shall be checked for specified limits. Frequency variation shall be measured.

The UPS shall not be damaged during operation with the loss of one phase or improper phase rotation in a three-phase system.

The input failure should be conducted by interrupting the ac input as far upstream as practical.

6.3.6 AC Input Return Test

This test shall be performed either by restoring the ac input power, or simulated by switching on all UPS rectifiers and bypass feeders at the same time.

Proper operation of all UPS rectifiers including walk-in, if applicable, shall be observed. Ac output voltage and frequency shall also be measured.

This test shall normally be performed with a battery or appropriate dc source. If the test in 6.3.15 is specified, this test shall be performed at the end of that test.

6.3.7 Parallel UPS Redundance Test (Applies to Figures 2-9 and 2-10)

This test shall be required for UPS incorporating parallel redundancy. The test shall be conducted with rated load applied to the UPS. By failure simulation, redundant functional units or UPS units shall be made to fail. The output voltage transient shall be measured and shall comply with the limits given in Figure 5-2.

6.3.8 Transfer Test

This test shall be required for UPS with bypass capability. The test shall be conducted with rated load applied to the UPS. By failure simulation, the load shall be transferred to bypass and then back to UPS. The output voltage transient shall be measured and shall comply with the limits given in Figure 5-2.

6.3.9 Full Load Test

Load tests shall be performed by connecting loads to the UPS output, equivalent to the full rated load. UPS in

Copyright National Electrical Manufacturers Association
Provided by IHS under license with NEMA
No reproduction or networking permitted without license from IHS
Not for Resale

Table 6-1
TESTING SCHEDULE

Test	(Mandatory) Type Test	Routine Test	Optional Type of Test When Required for Specific Application	(See pages 53) Specification
Light load	X	X		6.3.1
Auxiliary device (s)	X	X		6.3.2
Synchronization	X	X	X	6.3.3
Output frequency rate of change	X			6.3.4
Ac input failure	X	X		6.3.5
Ac input return	X	X		6.3.6
Parallel UPS redundancy test	X			6.3.7
Transfer	X	X	X	6.3.8
Full load	X		X	6.3.9
UPS efficiency	X			
Unbalanced load	X		X	6.3.11
Output voltage unbalance	X		X	6.3.12
Current division in parallel UPS	X	X	X	6.3.13
Stored Energy time	X		X	6.3.14
Energy Restore Time	X		X	6.3.15
Overload capability	X	X	X	6.3.16
Short-circuit test	X		X	6.3.17
Restart	X	X	X	6.3.18
Output overvoltage protection	X		X	6.3.19
Periodoc output voltage modulation	X		X	6.3.20
Frequent modulation	X		X	6.3.21
Radio frequency interference and conducted noise	X		X	6.3.22
Harmonic components	X		X	6.3.23
Audible noise	X		X	6.3.24
Surge voltage	X		X	6.3.25
Operating temperature	X		X	6.3.26
Dielectric withstand	X		X	6.3.27

Copyright National Electrical Manufacturers Association
Provided by IHS under license with NEMA
No reproduction or networking permitted without license from IHS
Not for Resale

parallel connection shall be load tested by testing individual UPS units separately or as a whole.

6.3.10 UPS Efficiency Test

UPS efficiency shall be determined by the measurement of the real power input and output.

6.3.11 Unbalanced Load Test

Unbalanced loads shall be applied to the UPS or UPS units. The voltage unbalance shall be measured.

Phase angle deviations shall be measured, or calculated from the measured values of phase-to-phase and phase-to-neutral voltages.

6.3.12 Balanced Load Tests

Balanced loads shall be applied to the UPS or UPS units. The voltage unbalance shall be measured.

Phase angle deviations shall be measured, or calculated from the measured values of phase-to-phase and phase-to-neutral voltages.

6.3.13 Current Division in Parallel or Parallel Redundant UPS Test

Current Division in the parallel or parallel redundant UPS units or functional units shall be measured with either a simulated or actual load.

6.3.14 Stored Energy Time Test (Batteries)

The stored energy time shall be determined by switching off the ac input to the UPS operating at rated load and measuring the duration that specified output power is maintained. The battery voltage must not fall below the specified value during this test.

New batteries often do not provide rated capacity during the initial operation. A freshening charge may be recommended by the manufacturer before discharge tests are performed. The initial discharge test performance should be compared against rated performance. Repeated charge and discharge cycles may initially indicate greater than rated performance but may reduce the life of the battery.

6.3.15 Restored Energy Time Test

When the energy restored time is specified, it shall be established by repeating the stored energy time test, as described in 6.3.14, after the specified charging period. For UPS with chargers or rectifier/chargers, the charging current and voltage should be measured to verify specified charging rate and float voltage regulations.

6.3.16 Overload Capability Test

The specified kVA or kW overload(s) shall be applied to the UPS output for the time interval(s) specified. The output voltage and current shall be measured with ac input power applied.

6.3.17 Short Circuit Test

A short circuit shall be applied to the UPS output and the following items measured for a UPS without bypass and with ac input power applied:

a. The operation of protective devices or circuits
b. The peak short circuit current
c. The output steady state short circuit current and length of time, if specified.

Appropriate circuit protective devices (fuses, circuit breakers) shall be permitted when making these tests.

6.3.18 Restart Test

Automatic or other restart means shall be tested after a complete shutdown of UPS.

6.3.19 Output Overvoltage Protection Test

Output overvoltage protection shall be tested.

6.3.20 Periodic Output Voltage Modulation Test

Voltages shall be observed at specific loads and operating conditions.

6.3.21 Frequency Modulation Test

If applicable, the frequency modulation test shall be consistent with 8.8.

6.3.22 Radio Frequency Interference and Conducted Noise Tests

Radio frequency interferences and conducted noise tests shall be conducted in compliance with applicable federal regulations.

Radio frequency interference and conducted noise of UPS shall be specified for rated loads.

6.3.23 Harmonic Components Test

Harmonic components of output voltage shall be tested under rated linear load conditions per 8.4.3.

Input current total harmonics distortion (THD) shall be tested under rated linear load conditions with the ac input source specified by the UPS manufacturer. The input source voltage shall be set to the nominal valve.

6.3.24 Audible Noise Test

Audible noise may be tested in accordance with ANSI S1.31 to S1.36-1972, Method for Physical Measurement of Sound, using a sound level meter conforming to the requirements of ANSI S1.4-1971.

6.3.25 Surge Withstand Capability Test

The ac input terminals of the UPS shall be subjected to the appropriate surge voltage waveform as described in C62.41-1987 and C62.45-1987/IEEE 587 Surge Withstand Capability (SWC) Test or demonstrate compliance by analysis.

Copyright National Electrical Manufacturers Association
Provided by IHS under license with NEMA
No reproduction or networking permitted without license from IHS
Not for Resale

The UPS shall continue to operate as specified.

6.3.26 Operating Temperature Test

Operating temperatures of components shall be within the limits specified in UL 1778-1989.

6.3.27 Dielectric Voltage—Withstand Test

Dielectric Voltage test shall be performed in accordance with that specified in UL 1778-1989.

6.4 TEST MEASURING METHODS FOR INPUT AND OUTPUT

6.4.1 Accuracy

Harmonics may influence the accuracy of the test measurement, and their affects on test results should be evaluated.

6.4.2 Voltage Transients

Voltage transients shall be measured by either an oscilloscope, transient recorder, or by another method which records momentary values of transients.

6.5 FUNCTIONAL UNIT TESTS

Functional unit tests are required only when separate functional units are supplied. If unit tests are required, they shall be tested as shown in 6.5.1–6.5.5.

6.5.1 Rectifier Tests

Rectifier tests shall be performed according to Section 7.

6.5.2 Inverter Tests

Inverter tests shall be performed in accordance with Section 8.

6.5.3 Testing of UPS Switches

Operational tests of UPS switches may be performed in accordance with IEC 146 (1973) Semiconductor Converters (second edition) and IEC 146-2 (1974) Part 2. Semiconductor Self-Commutated Converters, (first edition).

The following testing procedures may be employed:

a. Dielectric/Insulation-IEC 146 Sub-clause 492.1
b. Checking of auxiliary devices—IEC 146 Sub-clause 6.4
c. Checking of protective devices—IEC 146 Sub-clause 492.9
d. Checking of supervising and remote signalling circuits
e. Checking of measuring devices
f. Light load transfer test

Authorized Engineering Information 3-5-1992

Type testing of UPS switches shall require a functional test with a complete UPS. In addition to the tests mentioned above, a type test program shall include:

a. Complete functional test, e.g. switching of loads
b. Transfer time test
c. Load test, temperature rise—IEC 146-2 Sub-clause 5.5
d. Short time overload—IEC 146-2 Sub-clause 5.9
e. Short circuit capability—IEC 146-2 Sub-clause 5.10

6.5.4 Monitoring and Control Equipment

Unit tests shall include:

a. Dielectric/insulation tests
b. Checking of electrical circuits
c. Checking of operational controls and alarms

6.5.5 UPS Testing Procedure

Following the functional testing, in accordance with 6.5, if required, the UPS testing shall be completed at the installation site, per 6.2 and 6.3.

Copyright National Electrical Manufacturers Association
Provided by IHS under license with NEMA
No reproduction or networking permitted without license from IHS
Not for Resale

SECTION 7
RECTIFIER/CHARGER TESTS

7.1 GENERAL

Tests are divided into two categories, type tests listed in 7.1.1 and routine tests listed in 7.1.2.

7.1.1 Type Tests

Type tests are those tests which are made to determine the performance characteristics of rectifier/chargers. They need not be repeated unless design changes are made that would affect the test results. Type tests include but are not limited to the following:

a. Dielectric test (see 7.2)
b. Voltage adjustment test (see 7.3)
c. No-load test (see 7.4)
d. Temperature rise test (see 7.5)
e. Current-limit test (see 7.6)
f. Short-circuit test (see 7.7)
g. Voltage regulator test (see 7.8)
h. Efficiency measurement (see 7.9)
i. Power factor measurement (see 7.10)
j. Ripple voltage measurement (see 7.11)
k. Audible noise test (see 7.12)
l. Voltage surge test (see 7.13)

7.1.2 Routine Tests

The following routine tests are those tests which shall be performed by the manufacturer on all production units:

a. Dielectric test (see 7.2)
b. Voltage adjustment test (see 7.3)
c. No-load test (see 7.4)
d. Current-limit test (see 7.6)
e. Ripple voltage measurement (see 7.11)

7.2 DIELECTRIC TEST

Dielectric voltage test shall be performed in accordance with that specified in UL 1778-1989.

For those tests, all semiconductors, capacitors, and sensitive control components may be short-circuited; printed circuit control boards may be removed.

7.3 VOLTAGE ADJUSTMENT TEST (See Figure 7-1)

The ac input shall be adjusted to the rated value and the output current to one-half the rated value. The floating and equalizing voltage adjustments shall be within the ranges specified.

7.4 NO-LOAD TEST (See Figure 7-1)

The battery rectifier/charger shall be operated for 5 minutes with no-load applied, at the range limits of the supply voltage, to assure its ability to float-charge the connected battery.

7.5 TEMPERATURE RISE TEST (See Figure 7-1)

The battery rectifier/charger shall be operated continuously at its maximum output current until there is no further rise in the temperature of any component. The temperature rise shall not exceed the values given in UL 1778-1989.

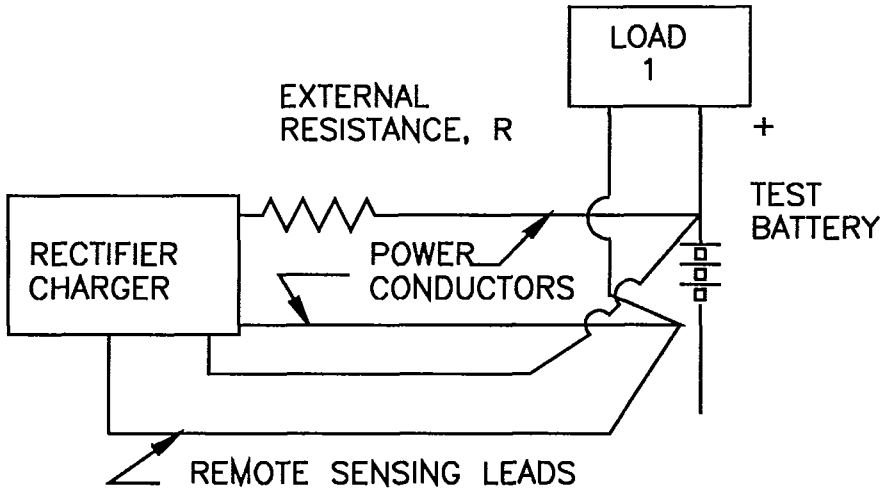

Figure 7-1
INTERCONNECTION OF BATTERY CHARGER, BATTERY AND LOAD

Copyright National Electrical Manufacturers Association
Provided by IHS under license with NEMA
No reproduction or networking permitted without license from IHS
Not for Resale

The load shall be resistive, with a battery connected in parallel, to provide the required current.

If a mode of operation other than at maximum output current would result in a greater temperature rise in any component, the charger shall be operated in that mode until the maximum temperature rise of that component is ascertained.

7.6 CURRENT-LIMIT TEST (See Figure 7-1)

The rectifier/charger shall be operated and overloaded to its design current-limit value until its output voltage drops to at least the level of a fully-discharged battery as specified.

7.7 SHORT-CIRCUIT TEST (See Figure 7-1)

A short-circuit shall be placed across the output terminals of the rectifier/charger. The charger shall be capable of withstanding the short-circuit condition either by means of the current limit feature or operation of an output circuit breaker or a fuse. The battery shall be removed for this test.

7.8 VOLTAGE REGULATION TEST (See Figure 7-1)

This test shall be made at the rated floating and equalizing voltage settings. The rectifier/charger shall be operated at the minimum and maximum limits of specified line voltage while applying at least three increments no-load, half-load, full-load. The average dc voltage shall be measured at the output terminals of the charger except that, where remote sensing is required, the voltage shall be measured at the battery terminals.

From the values measured, the maximum (E_{max}), the minimum (E_{min}) and the nominal (E_{nom}) voltage values shall be determined. The maximum deviation, expressed as a percentage, may be calculated as follows:

$$\text{Maximum Deviation percent} = \frac{E_{max} - E_{min}}{E_{nom}} \times 100$$

The regulation is usually expressed as a percentage of a nominal value where E_{nom} is equal to 1/2 the sum of E_{min} and E_{max}.

7.9 EFFICIENCY MEASUREMENT (See Figure 7-1)

The efficiency of a battery charger shall be determined by measuring the total power at the alternating-current input terminals by means of wattmeters and by measuring the average values of the direct-current voltage and current at the output terminals at rated output. Output watts is product of d.c. voltage and current.

From the values thus measured, the efficiency shall be calculated in accordance with the following:

$$\text{Efficiency (in percent)} = \frac{\text{average dc (output watts)}}{\text{(input watts)}} \times 100\%$$

Unless otherwise stated, the input watts shall include the power requirements of all accessories, such as fans. If, for the sake of convenience, efficiency is measured at other than rated average direct-current voltage and full-load input, the conditions of measurement shall be indicated.

7.10 POWER FACTOR MEASUREMENT (See Figure 7-1)

The power factor for single-and three-phase rectifier/chargers shall be calculated as follows:

$$\text{Power Factor} = \frac{\text{watts per phase}}{\text{rms volt–amperes per phase}}$$

For single-phase rectifier/chargers, the input watts can be measured with a suitable wattmeter and the voltamperes can be calculated from the measurements of the true rms input voltage and true rms input current, using rms responding meters.

For a three-phased charger, the input power factor may be calculated as follows:

$$\text{Power Factor} = \frac{\text{Total input watts}}{\text{Total input volts amperes}}$$

Where the voltage and current are rms values, they are measured with rms responding meters.

7.11 RIPPLE VOLTAGE MEASUREMENT (See Figure 7-1)

Measurements of ripple voltage shall be taken at the terminals of a fully charged battery. Ripple voltage shall be expressed in terms of an rms value and/or rms value as a percentage of the average dc output voltage of the battery charger.

During this test, all peripheral loads shall be disconnected from the battery, and a variable resistive load shall be connected across the battery terminals to cover the power rating of the battery charger.

7.12 AUDIBLE NOISE TEST (See Figure 7-1)

The rectifier/charger shall be operated under nominal full load conditions to determine the conditions which produce the highest audible sound level. Measurements shall be made in accordance with ANSI S1.31–S1.36-1972.

Copyright National Electrical Manufacturers Association
Provided by IHS under license with NEMA
No reproduction or networking permitted without license from IHS
Not for Resale

7.13 SURGE WITHSTAND CAPABILITY TEST (See Figure 7-2)

The surge withstand capability shall be tested in accordance with ANSI C62.41-1980 and C62.45-1987 or compliance demonstrated by analysis.

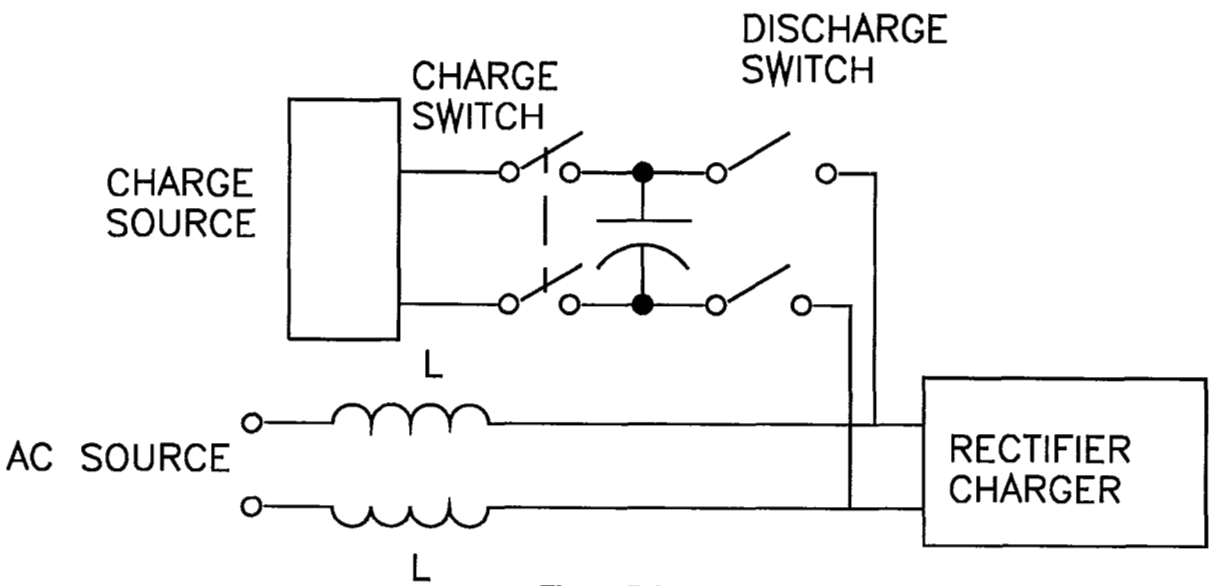

Figure 7-2
HOOK-UP FOR TRANSIENT VOLTAGE WITHSTAND CAPABILITY TEST

Copyright National Electrical Manufacturers Association
Provided by IHS under license with NEMA
No reproduction or networking permitted without license from IHS
Not for Resale

Copyright National Electrical Manufacturers Association
Provided by IHS under license with NEMA
No reproduction or networking permitted without license from IHS

Not for Resale

Section 8
INVERTER TESTS

8.1 GENERAL

The inverter to be tested shall be representative, in all respects, of the production run for which the tests are to be considered valid. Instrumentation for securing auxiliary data or making concurrent test (e.g. temperature rise) shall not distort the test results.

8.1.1 Schedule of Tests

The test program for an inverter unit includes some or all of the tests listed in Table 8-1. Some tests are required on all inverters; others are performed only if required for the specific application.

8.1.2 Test Circuit Diagram

The tests described in 8.4 can be carried out with the test circuit shown in Figure 8-1. This recommended test circuit applies to single-phase inverters, but can also be regarded as a single-phase representation of a test set-up for a multiphase inverter.

The test circuit consists of the following:

a. A variable direct voltage source U1
b. A bank of electrolytic capacitors C1 to assure low impedance input voltage to the inverter under test
c. Input instrumentation A1, W1, and V1
d. Output instrumentation V3, W2, A2, F, and WA (wave analyzer)
e. A variable load consisting of resistors, inductors, and capacitors to be connected by means of the switches S3
f. Additional means for inserting fuses and short circuits.

8.2 CHECKING OF AUXILIARY DEVICES

The functioning of auxiliary devices, such as contactors, pumps, fans, etc., shall be checked.

8.3 TEMPERATURE RISE TEST

The inverter shall be operated continuously under rated conditions until the temperature of all critical components has reached a steady-state value.

Within the supply voltage range of the inverter, the supply voltage shall be selected to give maximum temperature rise. If this supply voltage is not known, temperature rise shall be determined for the minimum, rated, and maximum values of supply voltage.

Temperature of all critical components shall be monitored under rated cooling conditions to determine the point at which steady state has been reached. (The temperature rise shall not exceed the valves given in UL 1778-1989.)

Table 8-1
TESTING SCHEDULE

	(Mandatory)		(Optional)	
Test	Type Test	Routine Test	Test When Required for Specific Application	See Sec 8 for Detail
Auxiliary Device (s)	*	*		8.2
Temperature Rise	*		*	8.3
Rated Continous Load and Light Load	*	*		8.4
Output Voltage Tolerance	*			8.4.1
Frequency Tolerance	*			8.4.2
Relative Harmonic Content	*			8.4.3
Power Efficiency	*			8.4.4
Audible Noise			*	8.5
Output Short-Circuit Current	*		*	8.6
Output Voltage Unbalance	*		*	8.7
Frequency Modulation			*	8.8
Voltage Rise			*	8.9
Voltage Dip			*	8.10
Operating Temperature	*		*	8.11
Dielectric Withstand	*	*		8.12

Copyright National Electrical Manufacturers Association
Provided by IHS under license with NEMA
No reproduction or networking permitted without license from IHS
Not for Resale

8.4 RATED CONTINUOUS-LOAD AND LIGHT-LOAD TESTS

While the inverter is operating under continuous rated load, the supply voltage shall be adjusted sequentially to the minimum, rated and maximum values and the required measurements (see 8.4.1 through 8.4.4) made at each point.

The inverter shall then be tested under a light-load condition. The supply voltage shall again be adjusted sequentially to the minimum, rated and maximum values and the required measurements made at each point.

8.4.1 Output Voltage Regulation (See Figure 8-1)

Voltmeter V1 shall be a dc voltmeter of adequate accuracy to indicate the supply voltage to the inverter under test.

Voltmeter V3 shall be an rms-reading voltmeter of adequate accuracy to indicate output voltage of the inverter under test.

Ammeter A2 shall be an rms-reading ammeter of adequate accuracy to indicate output current with the inverter under test.

The output voltage regulation shall be determined from the readings taken of V3 for the specified supply voltage range as read on voltmeter V1 and for the light load and rated continuous load as noted from ammeter A2.

If the output voltage tolerance is to be determined over a current range other then light load up through rated continuous load, it shall be measured over the specified range and so indicated.

8.4.2 Frequency Regulation (See Figure 8-1)

Voltmeter V1 and ammeter A2 shall be in accordance with 8.4.1.

The frequency meter, F, shall be of sufficient accuracy to read the fundamental frequency of the output voltage at a fixed value or over the frequency range of the inverter under test.

If the frequency regulation is to be determined over a current range other then light load up through rated continuous load, it shall be measured over the specified range and so indicated.

8.4.3 Output Harmonic Distortion (See Figure 8-1)

Voltmeters V1 and V3 and ammeter A2 shall be in accordance with 8.4.1.

The wave analyzer, WA, shall be a distortion analyzer or a broad-band voltmeter used in conjunction with a rejection filter and a pass-band filter.

The relative harmonic content shall be determined from reading the rms value of the output voltage of the inverter under test and the rms value after the fundamental has been rejected by wave analyzer, WA.

The relative harmonic content shall be determined for the specified supply voltage range as read on voltmeter V1 and for the light-load and rated continuous load as noted from ammeter A2.

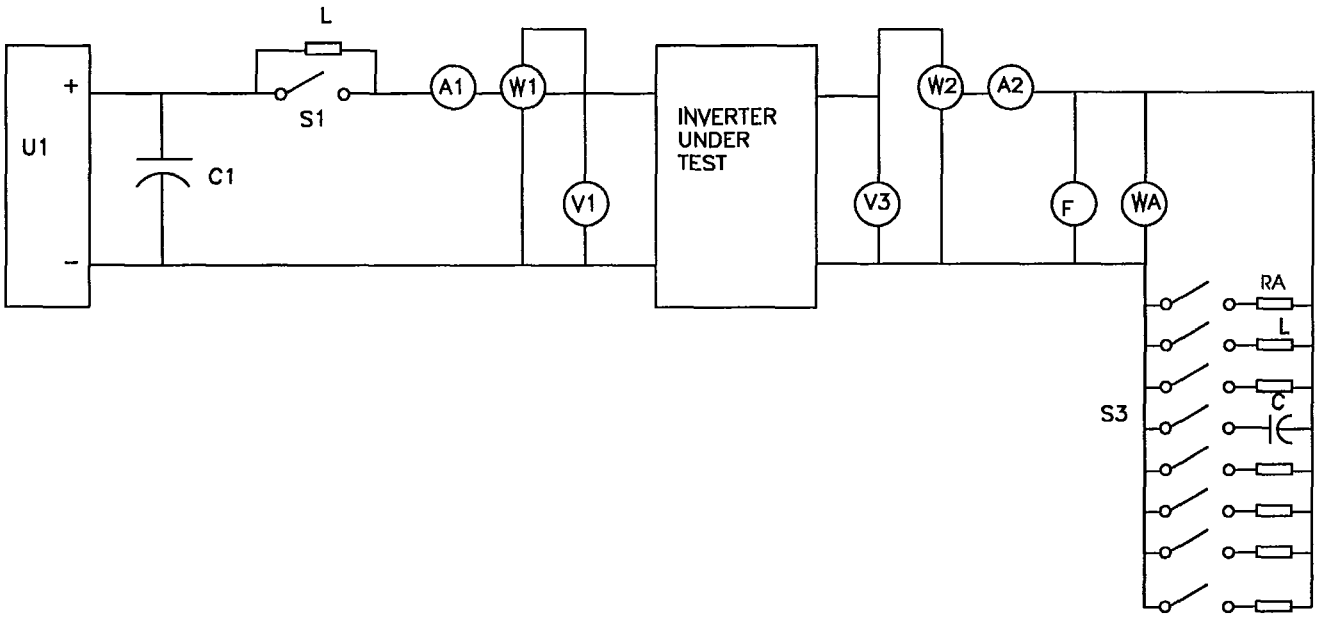

Figure 8-1
TEST CIRCUIT DIAGRAM

Copyright National Electrical Manufacturers Association
Provided by IHS under license with NEMA
No reproduction or networking permitted without license from IHS
Not for Resale

If the relative harmonic content is to be determined over a current range other then light load up through rated continuous load, it shall be measured over the specified range and so indicated.

If the relative harmonic content is specified for the output current of the inverter under test, it shall be measured and so indicated. The load condition shall be specified in this case if the load differs from a pure resistive load.

If not otherwise specified, the output voltage relative harmonic content shall be measured under rated conditions.

The test set up shall be in accordance with 8.4 and Figure 8-1.

Voltmeters V1 and V3 and ammeter A2 shall be in accordance with 8.4.1 and the frequency meter, F, in accordance with 8.4.2.

Ammeter A1 shall be a mean-value direct-reading ammeter of adequate accuracy to indicate the direct-current input to the inverter under test.

Wattmeter W2 shall be of sufficient accuracy to read the fundamental power output from the inverter under test. (Sufficient accuracy may be obtained by the use of a wattmeter which is so designed as to read the fundamental power only. If the output voltage has a low relative harmonic content, the output power of the fundamental frequency can be measured with sufficient accuracy by using a wattmeter suitable for this frequency.)

The conversion factor shall be determined from the readings taken from voltmeter V1, ammeter A1 and wattmeter W2, for the specified input voltage range as read on voltmeter V1 and for the light load up through rated continuous load as noted from ammeter A2. Voltmeter V3 and frequency meter, F, shall be observed to ensure that tests are made within the output voltage tolerance band and within the frequency tolerance.

8.4.4 Power Efficiency

The test set up in accordance with Figure 8-1.

Voltmeters V1 and V3 and ammeter A2 shall be in accordance with 8.4.1 and the frequency meter F, in accordance with 8.4.2.

The wattmeter W2 shall be of sufficient accuracy to read the fundamental power output from the inverter under test. (Sufficient accuracy may be obtained by the use of a wattmeter which is so designed as to read the fundamental power only if the output has a low relative harmonic content, the output power of the fundamental frequency can be measured with sufficient accuracy by using a wattmeter suitable for this frequency).

The wattmeter W1 shall be of sufficient accuracy to read the power input, including both direct power and ripple power.

Power efficiency shall be determined from the readings taken from wattmeter W1 and wattmeter W2 for the specified input voltage range as read on voltmeter V1 and for the light load up through rated continuous load as noted from ammeter A2. Voltmeter V3 and frequency meter F shall be observed to insure that tests are made within the output voltage tolerance band and within the frequency tolerance.

8.5 AUDIBLE NOISE TEST

The inverter shall be operated at nominal full load conditions. Measurements shall be made in accordance with ANSI S1.31–S1.36-1972.

8.6 OUTPUT SHORT-CIRCUIT-CURRENT TEST

The short-circuit-current test is made to determine the available I^2t on a branch circuit supplied by the inverter.

Authorized Engineering Information 3-5-1992

The test shall be made at rated input direct voltage and rated continuous load and with appropriate fuses.

The output terminals shall be short circuited by a fuse at that time in the output cycle which results in the longest time for the fuse to open.

The test shall be repeated at the various times during the cycle to determine worst case.

8.7 OUTPUT VOLTAGE UNBALANCE TEST

The output voltage unbalance shall be determined from RMS voltage measurements at rated balanced load and no load. This voltage unbalance shall be determined by the following equation and that yields the highest value.

$$\text{Voltage Unbalance} = \frac{V_{MAX} - V_{AVG}}{V_{AVG}} \times 100\%$$

or

$$\frac{V_{UNBAL} = V_{AVG} - V_{MIN}}{V_{AVG} \times 100\%}$$

Where:

V_{AVG} is the average of the three-phase voltage measurements.

The min is the minimum of the three-phase voltage measurement.

Vmax is the maximum of the three-phase voltage measurement.

NEMA Standard 3-5-1992

The voltage unbalance factor shall be calculated as the ratio of OU to PU.

Vn = negative sequence component of the output voltage.

Vp = Positive sequence component of the output voltage.

Unbalanced ratio = OU/PU

Copyright National Electrical Manufacturers Association
Provided by IHS under license with NEMA
No reproduction or networking permitted without license from IHS
Not for Resale

8.8 FREQUENCY MODULATION

The test for frequency modulation shall be as specified.

8.9 OUTPUT OVERVOLTAGE TRANSIENT

The test for voltage rise shall be as specified.

8.10 OUTPUT UNDERVOLTAGE TRANSIENT

The test for voltage dip shall be as specified.

8.11 DIELECTRIC TEST

Dielectric voltage test shall be performed in accordance with that specified in UL 1778.

For those tests, all semiconductors, capacitors, and sensitive control components may be short-circuited; printed circuit control boards may be removed.

Copyright National Electrical Manufacturers Association
Provided by IHS under license with NEMA
No reproduction or networking permitted without license from IHS
Not for Resale

Section 9
SERVICE CONDITIONS

9.1 GENERAL

Uninterruptible power systems are designed to deliver rated performance and life when operated within the range of usual service conditions described in paragraph 9.2 below. Whenever possible, a UPS should be operated within these ranges to prevent premature failure or non-nominal operation resulting from abnormal deterioration of the insulation system, electrical breakdown, or mechanical wear. The manufacturer should be consulted for further information regarding any unusual service conditions.

9.2 USUAL SERVICE CONDITIONS

A UPS constructed in accordance with these standards shall be capable of operating within its rating under the following conditions:

a. The ambient air temperature at the equipment is 25°C nominal with a range of 0 to 40°C (77°F nominal with a range of 32 to 104°F).

b. The humidity does not exceed 95 percent (without condensation).

c. The altitude does not exceed 3300 feet (1000 meters).

d. The input AC voltage range shall be as indicated in Table 9-1. The UPS shall provide specified output power and recharge and maintain a fully charged battery when operated with ac input within the limits given in Table 9-1. For three-phase systems, the limits shall apply to any single phase voltage.

e. The ac line input frequency has a tolerance that does not exceed 5 percent of nominal. Note that most UPS inverters disconnect synchronization from the reference frequency upon smaller deviations (typically 0.5 Hz) and then run on their internal, highly accurate, frequency reference.

Authorized Engineering Information 3-5-1992

f. Distortion of the ac line input voltages shall be limited to the following:
   1. Total harmonic voltage distortion shall not exceed 10%.
   2. No single harmonic up to the 11th shall exceed 5%. Harmonics higher than the 11th shall decay as the reciprocal of the harmonic number.
   3. Surges shall be within the limits stated in ANSI C62.41-1987 (IEEE Guide for Surge Voltages in Low Voltage AC Power Circuits)

g. The following service conditions affect the battery.
   1. The maximum temperature difference between the warmest and coolest cells in the battery shall not exceed 3°C. (5.4°F). The temperature difference occurs when the battery is mounted near a heat source that warms the battery nonuniformly, or if the battery is on a tiered rack in an atmosphere that is thermally stratified.
   2. If operated continuously at the high end of the temperature range in item 1 above, the battery's useful life may be shortened. Consult the manufacturer.
   3. If operated at the low end of the temperature range in item 1 above, the battery may not provide the expected stored energy time. The manufacturer should be consulted.
   4. The dc voltage supplied to the battery shall be strictly in accordance with the battery manufacturer's specification.
   5. If the battery consists of vented cells, the ventilation system shall prevent the accumulation of gases from the battery such that the concentration of hydrogen shall not exceed 2%. See NEC (National Electric Code), article 480-8a.

Table 9-1
INPUT AC VOLTAGE

Nominal	Minimum	Maximum
120	106	127
208	184	220
240	212	254
277	245	293
480	424	508
575	508	600

9.3 UNUSUAL ENVIRONMENTAL CONDITIONS

The manufacturer should be consulted if any unusual environmental or service conditions exist. Among such conditions are exposure to:

a. Damaging fumes

b. Very dirty, corrosive, explosive, or abrasive environments

c. Conductive dust such as metal filings, carbon, etc.

d. Steam or oil mist

Copyright National Electrical Manufacturers Association
Provided by IHS under license with NEMA
No reproduction or networking permitted without license from IHS
Not for Resale

e. Combustible mixture of dusts or gases
f. Salt air, seacoast, or shipboard conditions
g. Extreme temperatures or sudden temperature changes
h. Temperature gradient exceeding 3°C (5.4°F) between warmest and coolest cells of the battery plant
i. Strong electromagnetic fields
j. Atmospheric conditions conducive to growth of fungus
k. Insect or vermin infestation
l. Radioactivity levels above those of the natural background
m. Restriction of ventilation
n. High radiated or conducted heat from other sources such as sunlight, furnaces, boilers, etc.
o. Cooling liquid containing acids or impurities which cause deterioration, corrosion, or blockage of converter parts exposed to the liquid coolant
p. Continuous average relative humidity above 95% or below 10%
q. Seismic activity or abnormal shock or vibration
r. Altitudes in excess of 3300 feet (1000 meters). See Table 9-2 for typical derating.

9.4 UNUSUAL ELECTRICAL CONDITIONS

The manufacturer should be consulted if unusual electrical conditions exist. Some examples of unusual electrical conditions are shown in section 9.4.1.

9.4.1 Ac Input(s) to UPS

a. Voltage in excess of the tolerances given in 9.2.4.
b. Frequency in excess of the tolerance given in 9.2.5.
c. Superimposed high frequency voltages (EMI).
d. Voltage harmonics in excess of those given in 9.2.6.
e. Transient voltages or other electrical noise such as that caused by lightning or reactive switching.
f. Voltage surges in excess of ANSI C62.41-1987.
g. Maximum fault current availability in excess of the fault current rating of the UPS protective devices.

Table 9-2
DERATING FACTORS FOR USE AT ALTITUDE ABOVE 1000 METERS

Meters	Feet	Derating Factor *
1000	3300	1.0
1500	4900	.95
2000	6600	.91
2500	8200	.86
3000	9800	.82
3500	11500	.78
4000	13100	.74
4500	14800	.70
5000	16400	.67

Based on density of dry air = 1.225 Kg/cu. meter at sea level, 15°C (59°F).

*Since fans lose efficiency with altitude, forced air cooled equipment will have a smaller derating factor.

Copyright National Electrical Manufacturers Association
Provided by IHS under license with NEMA
No reproduction or networking permitted without license from IHS
Not for Resale

Section 10
INSTALLATION

10.1 GENERAL INFORMATION

This section of the standard covers the installation of single phase and three-phase UPSes. The installation of a UPS can be very simple, or very complex. Some smaller units can be plugged into a wall outlet, other units may require experienced and licensed electricians for system installation. Installations may be subject to national and local codes. It is the purpose of this standard, to provide information which will promote safe installation and reliable operation of the UPS.

10.2 SITE PLANNING

Verify that the site conditions are in accordance with the information which has been gathered and documented in Appendix A.

10.2.1 Site Survey

The following items should be determined:

a. The total load in kVA and kW
b. Voltage requirements for the UPS input and UPS output
c. Floor plan
d. Elevator availability and capacity
e. Door clearances
f. Floor loading
g. Building access
h. Available power
i. Audible noise
j. Ventilation and ambient temperature ranges.

10.2.2 UPS Location

10.2.2.1 UPS LOCATED CLOSE TO CRITICAL LOADS

It is desirable to locate the UPS as close to the critical load(s) as is practicable.

10.2.2.2 FLOOR LOADING

Floor loading must be considered. When equipment is installed on casters, the point floor loading is increased. Floor loading shall not exceed the values defined by local codes and/or the architectural standards for the building.

10.2.2.3 AUDIBLE NOISE

Most UPS systems generate some audible noise. This should be considered during the placement of the UPS. Soundproofing may be required.

10.3 INITIAL UPS INSPECTION

10.3.1 Incoming Inspection

Upon receipt of the UPS, the following steps are suggested.

The packaging should be examined for visible signs of damage. A crushed package might indicate the unit was dropped, alerting the end user to examine the electronics for possible shipment damage.

Before unpacking, check the number on the crate against the bill of lading to assure the correct product has been shipped.

Verify that the unit received has been designed to operate from the line input voltages and frequency at the site.

Read the owners manual BEFORE beginning the actual installation. It is advisable to obtain a copy of the owners manual in advance of delivery.

Verify that all options and spare parts which have been ordered have been supplied and/or installed.

10.3.2 Storage requirements

In many cases, the UPS may not be installed upon delivery. When installation time is prolonged, the system batteries should be maintained and charged at intervals if life expectancy is to be realized. (See Section 4.) The UPS should be kept clean and free from dust and dirt.

10.4 INSTALLATION

10.4.1 Electrical Requirements

Before installation, verify that UPS received meets the specifications for input, frequency, output, neutral, and site requirements.

10.4.2 Qualified Personnel

Qualified personnel should be used to install the UPS. National and local codes should be met. A certified electrical contractor for installation is recommended. Some UPS's require minor adjustment during installation, and tests may need to be performed to assure that the UPS is performing as required.

10.4.3 Installation Wiring Diagram and Instructions

UPS installation wiring diagrams and instructions (generally supplied by the manufacturer) should be obtained.

10.4.4 Line and Circuit Breaker Sizing

The incoming line and incoming circuit breaker(s) shall be sized in accordance with the UPS input rating, and in accordance with local and national electrical codes.

Copyright National Electrical Manufacturers Association
Provided by IHS under license with NEMA
No reproduction or networking permitted without license from IHS
Not for Resale

10.4.5 Grounding Requirements

Grounding shall be installed and be maintained in accordance with national and local codes.

Refer to FIPS publication 94 for computer and data processing installations.

10.4.6 Wire Sizes and Type Wire

It is important to keep the UPS as close to the critical load as is practical.

The size of the cables between the batteries and the UPS may be larger than prescribed by code in order to meet the voltage drop limitations. For long runs, consult the UPS supplier.

An electrical contractor can provide the correct wire sizes and type wire needed for the UPS system. The wire size will vary with the size of the UPS and the line drop that is allowable.

10.5 SAFETY

See Section 11 for safety information.

10.6 BATTERY LOCATION

The location of the batteries in a UPS system varies and is dependent upon the size of the UPS and the specifics of the installation.

Keep the distance between the UPS and the battery bank as short as possible.

10.7 ON-SITE INSTALLATION AND VERIFICATION

10.7.1 Line Neutral, Ground, and Phase Rotation Verification

Proper connection of line, neutral, and ground shall be verified by the electrical contractor. For three-phase systems, phase rotation shall be verified.

10.7.2 DC Bus Voltages Verification (External Batteries)

The battery for the UPS shall meet the requirements set forth by the UPS supplier.

10.7.3 Bypass Input

In some installations, there may be a phase shift between the bypass input and output of the UPS. Consult the UPS manufacturer for phase shift information; phase and phase rotation should be verified. UPS with separate bypass input may be supplied by two feeders with separate disconnects.

10.7.4 Load Voltage and Phasing Verified

Prior to connection of the critical load, the UPS output voltage should be verified. Phasing and wiring should be verified to make sure that proper connection has been made. Refer to the owners manual or consult with the manufacturer.

10.7.5 Safety Shields

In some UPSes, safety shields have been included to protect operating personnel. Safety shields should never be permanently removed. When installation procedures require removal in order to gain access to high voltage terminals, these safety shields shall be replaced after the installation is complete.

10.8 UNUSUAL SERVICE CONDITIONS

The manufacturer should be consulted if unusual service conditions exist. These are covered in Section 9 of this standard.

10.9 BATTERIES

When planning the installation for the use of external battery banks, care should be given to the design of the battery racks. Batteries are very heavy, and seismic considerations may apply. Consult local codes and the building architecture. Planning should include ready access to batteries and battery terminals for routine maintenance.

Batteries can be potentially dangerous. Batteries contain sulfuric acid which can burn skin, destroy fabrics, and cause blindness, if spilled. Also, lead acid batteries, upon overcharging, may generate gasses which are a potentially explosive mixture. Proper ventilation and care in handling batteries are essential.

More detailed information may be found in Section 4.

10.10 UPS INSTALLATION DIAGRAMS

Installation diagrams should be provided by the electrical contractor after the electrical UPS installation has been completed.

10.11 MAINTENANCE PLAN

A scheduled maintenance plan should be formulated which will document the periods of routine maintenance that are required. The maintenance plan should have a provision for:

a. Designating a responsible site representative
b. Maintaining a maintenance and repair log
c. Maintaining an alarm log
d. Maintaining a battery maintenance schedule and log
e. Maintaining a log of down-time
f. Connections torquing and cleaning
g. Storage conditions and ventilation
h. Battery equalization
i. Schedule of air filter cleaning and/or replacement.

Copyright National Electrical Manufacturers Association
Provided by IHS under license with NEMA
No reproduction or networking permitted without license from IHS
Not for Resale

Section 11
SAFETY

11.1 DESIGN STANDARD

The UPS that is covered by this standard shall be designed to meet or exceed an applicable standard such as UL, CSA, IEC, or equivalent.

11.2 SAFE CONSTRUCTION

11.2.1 Nameplate Markings

The manufacturer shall provide nameplate markings to include the following minimum information:

a. Supplier's name
b. Model and/or part number designation or both
c. Serial number or control number
d. Rated input voltage (and phase configuration, if required)
e. Rated ac input current
f. Rated ac input frequency
g. Rated ac output voltage
h. Rated ac output frequency
i. Rated ac output current
j. Rated ac output power and output kVA
k. Rated dc input voltage (required for UPS with external battery)
l. Rated dc input current (required for UPS with external battery)
m. Rated dc input voltage (optional for UPS with internal battery)
n. Rated dc input current (optional for UPS with internal battery)
o. Weight (optional).

11.2.2 Terminal Markings

User connections shall be permanently identified to permit proper installation.

11.2.3 Precautionary Labeling

Precautionary labeling shall be prepared to give information on hazards and precautionary measures to users of UPSes.

11.2.4 Signal Words

In descending order of severity, three signal words are recognized to identify the level of hazards: **DANGER, WARNING,** and **CAUTION.**

DANGER indicates an immediate hazard that will result in death or severe personal injury if the precaution is not followed.

WARNING indicates a potential hazard that can result in death or severe personal injury if the precaution is not followed.

CAUTION indicates a hazard that can result in minor personal injury or property damage if the precaution is not followed.

11.2.5 Label Requirements

Warnings and instructions should NOT be mixed. The warning label shall:

a. State the hazard
b. Be conspicuous, clear, and concise
c. Describe the severity of the potential harm
d. Instruct the user how to avoid the hazard
e. Be permanently affixed to the product.

As a minimum, the electric shock can kill information shown in Figure 11-1, Precautionary Labeling Example, or its equivalent shall be placed on the UPS.

11.2.6 Labeling Size, Legibility, and Location Requirements

Size, legibility, and location of precautionary labeling shall be such that it can be read and understood by those who may encounter the equipment before they are exposed to the hazards identified.

The information shall be readily visible and may be on a label, tag, or other printed form and permanently affixed to the equipment. The manufacturer's name and address shall appear on the label unless it is readily visible elsewhere on the product. A label identification number shall appear on the precautionary label. Labeling shall be consistent with ANSI standard Z535.4.

11.2.7 Enclosure

The equipment shall be provided with a surrounding case or enclosure constructed to provide a degree of protection to personnel against accidental contact with energized and moving parts.

11.2.8 User Connections

Alternating-current terminals shall be of such a size and type and shall be so located that they will be capable of accommodating the power wiring specified for the maximum rated current in Article 310 of the National Electrical Code.

A grounding terminal or connection shall be provided to accommodate a grounding wire coming into the UPS and shall have an ampacity specified in Article 250 of the National Electrical Code.

Copyright National Electrical Manufacturers Association
Provided by IHS under license with NEMA
No reproduction or networking permitted without license from IHS
Not for Resale

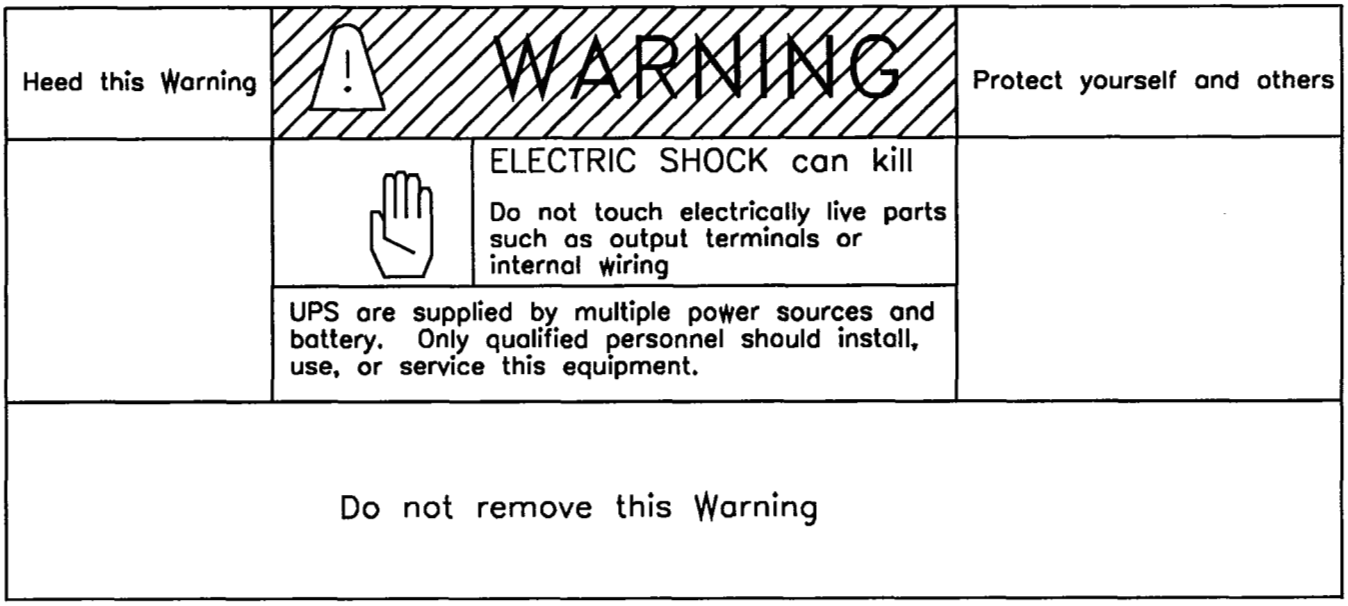

Figure 11-1
PRECAUTIONARY LABELING EXAMPLE

For UPS with external batteries, direct-current terminals shall be of such a size and type and shall be so located that they will be capable of accommodating the power wiring specified for the maximum rated current in Article 310 of the National Electrical Code.

Control terminals shall be of such size and type that they will accommodate the wiring specified in Article 310 of the National Electrical Code. The UPS manufacturer shall specify the voltage and current requirements of these terminations.

Terminals shall be of such a size and type and shall be so located that they will be capable of accommodating the power wiring specified for the proper ratings.

11.3 OPERATION

11.3.1 Components and Assemblies

The UPS components and assemblies should minimize the possibility of being reversed or installed in positions opposite from the correct one, especially where reverse installation could cause injury.

11.3.2 Hazardous voltages

Users shall be protected against casual contact of hazardous voltage circuits.

11.3.3 Safety Devices

Hazards that cannot be totally eliminated shall have safety devices, interlocks, guards, etc., incorporated into the UPS to isolate hazards and minimize unsafe operations.

11.3.4 Options & Additions

The options and additions provided by the supplier shall include safety protection instruction to the user/installer.

11.3.5 Guidelines for User Interface

Following is a list of expectations from the user.

a. Rotary controls should turn clockwise for ON or increase and counterclockwise for OFF or decrease.

b. Certain colors are associated with traffic and safety therefore:

—**Red** should signify danger or malfunction.

Copyright National Electrical Manufacturers Association
Provided by IHS under license with NEMA
No reproduction or networking permitted without license from IHS
Not for Resale

—**Orange** or **yellow** should signify caution or service required.
—**Green** should signify safe or normal condition.

11.4 SAFETY INSPECTION

The following items should be inspected following installation:

a. User assembly and interconnections
b. Clearances for access and ventilation
c. Floor loading
d. Safety shields and interlocks.

11.5 MAINTENANCE INSTRUCTIONS

The manufacturer shall provide maintenance instructions to include the following:

a. Preventive maintenance
b. Corrective maintenance, if applicable
c. How to determine if service is required on the UPS.

Copyright National Electrical Manufacturers Association
Provided by IHS under license with NEMA
No reproduction or networking permitted without license from IHS
Not for Resale

Copyright National Electrical Manufacturers Association
Provided by IHS under license with NEMA
No reproduction or networking permitted without license from IHS

Not for Resale

Appendix A
APPLICATION DATA FORM

1. GENERAL

This form provides assistance in establishing the technical and engineering information needed by the UPS user and supplier to meet the user's requirements. The form may be used as a detailed check list to assure that important equipment compatibility issues are addressed.

USER DATA

2. PROFILE OF THE LOAD TO BE OPERATED FROM THE UPS

Information to be provided by user.

a. Types of loads
- ( ) i. Computer system
- ( ) ii. Air conditioning or other motor
- ( ) iii. Lighting
- ( ) iv. Rectifier supplies
- ( ) v. Switchmode supplies
- ( ) vi. Other _____

b. Equipment list
- ( ) Attach separate sheets showing equipment manufacturer, model number, and rated input power requirement. Actual power requirement may vary from the nameplate data.

c. Estimated present total load requirements
- ( ) i. Single-phase loads
  - __Vac, __kVA, __Hz
  - __Power Factor, ( )leading,
  - ( )lagging
  - __A peak inrush current, __duration
  - __Crest factor
- ( ) ii. Three-phase loads
  - __Vac line-to-line __kVA, __Hz
  - ( ) Neutral required
  - __Power Factor, ( )leading,
  - ( )lagging
  - __A peak inrush current, __duration
  - __Crest factor
  - __Ungrounded
- ( ) iii. Special load considerations
  - ( ) Unbalanced loads
  - ( ) Non-linear loads
  - ( ) Intermittent duty
  - ( ) Load sequencing
  - ( ) Other _____
  - ( ) High neutral current
  - ( ) Load sequencing
  - ( ) High Neutral current
  - ( ) Special grounding
  - ( ) Other

d. Stored energy time (Battery run time)
- __Minutes stored energy time
- __Minutes restored energy time

Copyright National Electrical Manufacturers Association
Provided by IHS under license with NEMA
No reproduction or networking permitted without license from IHS
Not for Resale

(Battery recharge time)

e. Estimated future total load requirements

( ) i. Single-phase
__Vac, __kVA

( ) ii. Three-phase
__Vac, __kVA

3. AC INPUT POWER AVAILABILITY FOR UPS

Information to be provided by user.

( ) i. Single-phase
__Vac, __kVA, __Hz

( ) ii. Three-phase
__Vac line-to-line __kVA __Hz (No Neutral Available)
__Vac line-to-neutral __kVA __Hz (Neutral Available)

( ) iii. Special conditions
( ) Standby generator
__Vac, __kVA, __Hz
( ) High source impedance and/or poor voltage regulation
( ) Superimposed voltage harmonics
( ) Transient voltages
( ) Frequent outages
__ Number per month
__ Duration

( ) iv. Available fault current_____Amps

( ) v. Source grounding_____

4. GENERAL PHYSICAL AND SERVICE REQUIREMENTS

Information to be provided by user. Also see Section 9. Attach additional specifications or site drawings.

a. Ambient temperature. . . . . __ max __ min
b. Cooling system . . . . . _____
c. Special environmental conditions:
( ) fumes, ( ) moisture, ( ) dust, ( ) salt air,
( ) heat, ( ) other _____
d. Special mechanical conditions:
( ) vibration, ( ) shock, ( ) transport & handling
( ) access limitations, ( ) other
e. Limitations of space and weight _____
f. Audible noise limits . . . . . _____
g. Grounding and isolation requirements_____
h. Maintenance bypass requirements _____
i. Local/remote monitoring and control_____
j. Safety code requirements . . . _____
k Size of largest shipping split, if needed

Copyright National Electrical Manufacturers Association
Provided by IHS under license with NEMA
No reproduction or networking permitted without license from IHS
Not for Resale

SUPPLIER DATA

5. UPS RATED INPUT CHARACTERISTICS AND POWER REQUIREMENTS

Information to be provided by UPS supplier.

a. Phase configuration ( ) Single-phase
( ) Three-phase wye
( ) Three-phase delta
b. Input voltage___Vac ___%
c. Input current ___
d. Input power factor___
e. Input frequency___Hz ___%
f. Inrush current___A peak,___duration
g. Harmonic currents (THD) ___%
h. Current crest factor___

6. UPS RATED OUTPUT CHARACTERISTICS

Information to be provided by UPS supplier.

a. Phase configuration ( ) Single-phase
( ) Three-phase wye
( ) Three-phase delta
b. Output voltage ___ Vac ___%
c. Rated Output power and apparent power ___kW, ___ kVA
d. Power factor capability ___
e. Output frequency ___Hz ___%
f. Overload capability _A peak maximum, _duration
g. Total harmonic distortion at rated linear load _%
h. Maximum load crest factor capability ___
i. Unbalanced voltage for balanced and unbalanced load ___

7. STORED ENERGY

Information to be provided by UPS supplier.

a. Stored energy time (Battery run time) ___minutes
b. Restored energy time (Battery recharge time) ___minutes
c. Type of battery . . . . . ___
d. Characteristics of battery (if not an integral part of UPS)
i. Nominal voltage ___Vdc
ii. End (discharge) voltage ___Vdc
iii. Rated current at nominal voltage ___ADC
iv. Maximum current at end voltage ___ADC

8. GENERAL PHYSICAL AND SERVICE REQUIREMENTS

Information to be provided by ups supplier.

a. UPS losses (heat rejection) BTU/Hr
b. Size and weight of UPS
c. Size and weight of batteries_____
d. Configuration drawings including connections and access requirements_____
e. Ambient temperature
f. Type of cooling

Copyright National Electrical Manufacturers Association
Provided by IHS under license with NEMA
No reproduction or networking permitted without license from IHS
Not for Resale

NEMA STANDARDIZATION BACKGROUND

The purpose of NEMA Standards, their classification, and status are set forth in certain clauses of the NEMA *Standardization Policies and Procedures* manual and are referenced below:

Purpose of Standards

National Electrical Manufacturers Association Standards are adopted in the public interest and are designed to eliminate misunderstandings between the manufacturer and the purchaser and to assist the purchaser in selecting and obtaining the proper product for their particular needs. Existence of a National Electrical Manufacturers Association Standard does not in any respect preclude any member or nonmember from manufacturing or selling products not conforming to the standard.

(Standardization Policies and Procedures, p. 1)

Definition of a Standard

A Standard of the National Electrical Manufacturers Association defines a product, process or procedure with reference to one or more of the following: nomenclature, composition, dimensions, tolerances, safety, operating characteristics, performance, rating, testing, and the service for which they are designed.

(Standardization Policies and Procedures, p. 2)

Dimensions

Where dimensions are given for interchangeability purposes, alternate dimensions satisfying the other provisions of the Standards Publication may be capable of otherwise equivalent performance.

(Standardization Policies and Procedures, p. 8)

Categories of Standards

National Electrical Manufacturers Association Standards are of three classes, which have received the affirmative vote of at least two-thirds of the Subdivision votes cast in the affirmative or negative:

1. NEMA Standard, which relates to a product, process, or procedure commercially standardized and subject to repetitive manufacture.
2. Suggested Standard for Future Design, which may not have been regularly applied to a commercial product, but which suggests a sound engineering approach to future development.
3. Adoptive Standard, which is adopted in whole or in part from the standards of another organization, either domestic, regional, or international.

(Standardization Policies and Procedures, pp. 7 & 16)

Authorized Engineering Information

Authorized Engineering Information consists of explanatory data and other engineering information of an informative character not falling within the classification of NEMA Standard or Suggested Standard for Future Design, which standard has received the affirmative vote of at least two-thirds of the Subdivision votes cast in the affirmative or negative.

(Standardization Policies and Procedures, pp. 7 & 16)

Identification of Status

Standards in NEMA Standards Publications are identified as "NEMA Standard," "Suggested Standard for Future Design," or "Adoptive Standard." These indicate the status of the standard. A statement incorporating the auxiliary verb "shall" indicates that compliance with a requirement is mandatory for compliance with the standard. These classes of standards are identified in the foreword or throughout the text.

The material identified as "Authorized Engineering Information" is designated similarly. Statements incorporating other auxiliary verbs such as "should," "may," etc. refer to authorized engineering information and not to procedures required for compliance with the standard.

Copyright National Electrical Manufacturers Association
Provided by IHS under license with NEMA
No reproduction or networking permitted without license from IHS
Not for Resale

POWER ELECTRONICS SECTION
OF THE
NATIONAL ELECTRICAL MANUFACTURERS ASSOCIATION
MEMBER COMPANIES

AT&T
Union, New Jersey 07083-8107

Best Power Technology, Inc.
Necedah, WI 54646

Cyberex Inc.
Mentor, OH 44060

Electro Networks/UPSystems
A Division of Chloride Power Electronics, Inc.
Caledonia, NY 14423

EPE Technologies, Inc.
Costa Mesa, CA 92626

Emerson Electric Co.
Industrial Controls Division
Santa Ana, CA 92702

Hobart Brothers Co.
Troy, OH 45373

K/W Control Systems
Middletown, NY 10940

La Marche Manufacturing Co.
Des Plaines, IL 60018

Lorain Products-Reliance Co.
Lorain, OH 44052

Pacific Power Source Corp.
Huntington Beach, CA 92449

Square D Co.
Palatine, Il 60067

Sola Electric
Unit of General Signal Corp.
Elk Grove Village, IL 60007

Teledyne Inet
Torrance, CA 90509

Toshiba International Corp.
Industrial Division
Houston, TX 77041

Westinghouse Electric Corp.
Buffalo, NY 14240

Copyright National Electrical Manufacturers Association
Provided by IHS under license with NEMA
No reproduction or networking permitted without license from IHS
Not for Resale