PB 2.2-83 6470247 0003360 2
A-11-27

STANDARDS PUBLICATION/NO. PB 2.2-1983

nema

Application Guide for Ground Fault Protective Devices for Equipment

NEMA

NATIONAL ELECTRICAL MANUFACTURERS ASSOCIATION ■ 2101 L STREET, N.W., WASHINGTON, D.C. 20037

Copyright National Electrical Manufacturers Association
Provided by IHS under license with NEMA
No reproduction or networking permitted without license from IHS
Not for Resale

TABLE OF CONTENTS

		Page
	FOREWORD	iii
	SCOPE	iii
Section 1	REFERENCED STANDARDS	1
Section 2	INTRODUCTION	
	Arcing Ground Faults	2
	Need for Ground Fault Protection	2
	Standards	2
	Application—General	2
	Relay Setting Selections—General	3
	Methods of GFP Device Selectivity	3
	Damage Levels	3
Section 3	POWER CIRCUIT	
	Voltage	4
	Frequency	4
	Current Rating	4
	Location of Ground Fault Sensing Devices	4
	Ground Connections	4
	Mounting and Connection of Ground Fault Sensing Devices	4
	Delta Connected Systems	5
	Neutrals and Grounding	5
	Need for Complete System Information	5
	Systems Containing Transformers	5
	System Design	5
Section 4	CONTROL CIRCUIT	
	Control Circuit Voltage and Frequency	6
	AC Control Power	6
	DC Control Power	6
	Control Circuit Protection	6
	Control Wiring	6
	Indication and Test Circuits	6
	Compatibility of GFP Devices	6
Section 5	TYPICAL APPLICATION DIAGRAMS	
	General	7
	Ground Fault Protection on Main Disconnect Only	7
	Ground Fault Protection on Main and Feeder Disconnects	7
	Ground Fault Protection on Main and Feeder Disconnects with Zone Selective Interlocking	8
	Ground Fault Protection on Main, Feeders, and Selected Branch Disconnects with Zone Selective Interlocking	8
	Double-ended System with Ground Fault Protection on Mains, Tie and Feeder Disconnects	8
Section 6	TIME AND CURRENT SETTINGS	
	Application of Ground Fault Protective Systems for Coordinated Ground Fault Tripping	17
	Types of Coordinated Ground Fault Tripping Systems	17
	Time-current Band Selective System	17
	Zone Selective System	17
	Coordination of Low-voltage Disconnects with the High-voltage Side of a System	17

(continued)

Copyright National Electrical Manufacturers Association
Provided by IHS under license with NEMA
No reproduction or networking permitted without license from IHS
Not for Resale

TABLE OF CONTENTS *(continued)*

		Page
	Coordination with Downstream Overcurrent Devices Not Equipped with Ground Fault Protection	17
	Typical Settings	18
Section 7	TYPICAL COORDINATED SYSTEMS	
	Coordinated Protection	23
	Examples	23
Section 8	TESTING OF GROUND FAULT SENSING AND RELAYING EQUIPMENT	
	Design Tests	25
	Production Tests	25
	Tests on Assembled Equipment	25
	Preparation for Field Testing	25
	Field Testing	25
Appendix A	ARCING FAULT DAMAGE LEVELS	
	Approximate Arcing Fault Damage Levels for 480/277 Volt Systems	26
	Arcing Fault Current	26
	Assumed Tolerable Damage Levels	26
	Probable Amount of Damage	26
Appendix B	SYSTEM DESIGN CHECKLIST	
	General	29
	Power System	29
	Ground Fault Current Paths	29
	Ground Fault Protective Devices and Settings	29
	Control Power	29

© 1983 by the National Electrical Manufacturers Association

Copyright National Electrical Manufacturers Association
Provided by IHS under license with NEMA
No reproduction or networking permitted without license from IHS
Not for Resale

APPLICATION GUIDE FOR GROUND FAULT PROTECTIVE DEVICES FOR EQUIPMENT

Foreword

This Standards Publication is intended to provide a basis of common understanding within the electrical community. To assure a meaningful publication, copies were sent during the draft stage to a number of typical individuals and organizations in the public and private sector having an interest in or responsibility for the purchase, testing, application, use, or inspection of this product category. Their comments and suggestions provided a vital user and general interest input prior to final NEMA approval and resulted in a number of substantive changes in this publication. As future major revisions to this publication are proposed, it is intended to offer the same or similar individuals or organizations a further opportunity to participate in the development of this publication. This publication is also periodically reviewed by the Panelboard and Distribution Board Section of NEMA for any revisions necessary to keep it up to date with advancing technology.

Comments will be welcomed. They should be sent to:

Manager, Engineering Department
National Electrical Manufacturers Association
2101 L Street, N.W.
Washington, D.C. 20037

Scope

This publication is a guide of practical information containing instructions for the safe and proper application of ground fault protective devices for equipment. It covers the application of ground fault protective devices (hereafter referred to as GFP devices).

GFP devices include current sensing devices (GFS), relaying equipment (GFR), or combinations of current sensing devices and relaying equipment, or other equivalent protective equipment which will operate to cause a disconnecting means to open all ungrounded conductors at predetermined values of ground fault current and time. GFP devices are intended only to protect equipment against extensive damage from ground faults.

GFP devices are intended to operate circuit breakers or fusible switches equipped with electrically actuated tripping means. These devices may be supplied as an integral portion of the disconnecting means or as separate devices operating in conjunction with the disconnecting means. GFP devices may or may not require external control power for proper tripping operation.

GFP devices are designed to be used primarily on solidly grounded distribution systems rated up to a maximum of 1000 volts ac to provide for rapid clearing of ground faults. This application guide does not cover all possible applications of these devices.

Ground fault protection systems described in this publication are intended for equipment protection only. They cannot provide protection for personnel. A ground fault relaying system designed for protecting equipment cannot protect personnel against electric shock hazards because personnel protective devices, such as ground-fault circuit-interrupters, require a sensitivity in the low milliampere range. The systems used to meet the requirements of Article 230—Services, and of Article 517—Health Care Facilities, of the *National Electrical Code* have a sensitivity in the multi-ampere range. This application guide does not contain information on ground fault protection for personnel (GFCI).

Copyright National Electrical Manufacturers Association
Provided by IHS under license with NEMA
No reproduction or networking permitted without license from IHS
Not for Resale

Section 1
REFERENCED STANDARDS

In this publication, reference is made to the standards listed below. Copies are available from the indicated sources.

National Fire Protection Association
Batterymarch Park
Quincy, MA 02269

NFPA 70-1984 *National Electrical Code*

Underwriters' Laboratories, Inc.
333 Pfingsten Road
Northbrook, IL 60062

UL 1053-1982 *Ground Fault Sensing and Relaying Equipment*
UL 891-1983 *Dead-front Electrical Switchboards*
UL 489-1983 *Circuit Breakers, Molded Case, and Circuit Breaker Enclosures*
UL 67-1982 *Electric Panelboards*
UL 977-1982 *Fused Power-circuit Devices*

American National Standards Institute, Inc.
1430 Broadway
New York, NY 10018

ANSI C37.16-1980 *Low-voltage Power Circuit Breakers and AC Power Circuit Protectors, preferred Ratings, Related Requirements and Application Recommendations*
ANSI C37.17-1979 *Trip Devices for AC and General Purpose DC Low-voltage Power Circuit Breakers*

Institute of Electrical and Electronic Engineers, Inc.
345 East 47th Street
New York, NY 10017

IEEE Std. 242 *Recommended Practice for Protection and Coordination of Industrial and Commercial Power Systems,* Chapter VIII (Buff Book).
IEEE Std. 142 *Recommended Practice for Grounding Industrial and Commercial Power Systems,* (Green Book)
IEEE Std. 141 *Electric Power Distribution for Industrial Plants,* Chapter V (Red Book).

Also from IEEE:
Arcing Fault Protection for Low-voltage Power Distribution Systems—Nature of the Problem, R.H. Kaufman and J.C. Page. AIEE Trans. *Power Apparatus and Systems,* Vol. 79, pages 160-167, June 1960.

Ground Fault Protection for Low and Medium Voltage Distribution Circuits, D. Dalasta. *Proceedings of American Power Conference,* Vol. 32, pages 885-895, 1970.

The Resistance of Low-voltage Alternating Current Arcs, Lawrence E. Fisher. IEEE Trans. (Ind. & Gen. Appl.), Vol. IGA-6, No. 6, pages 607-616, Nov./Dec. 1970.

The Effects of Arcing Ground Faults on Low-voltage (Power) System Design, J.R. Dunki-Jacobs. IEEE Trans. (Ind. Appl.), Vol. 1A-8, No. 3, pages 223-230, May/June 1972.

Predicting Damage from 277 Volt Single Phase to Ground Arcing Faults, H.I. Stanback. IEEE Conference Record of 1975, I & CPS Technical Conference, pages 15-25, May 5-8, 1975.

Ground Fault Protection of Electrical Systems with Emergency or Standby Power, R. Castenschoild. IEEE Conference Record of 1976. I & CPS Technical Conference, pages 15-25, May 10-13, 1976.

Copyright National Electrical Manufacturers Association
Provided by IHS under license with NEMA
No reproduction or networking permitted without license from IHS
Not for Resale

Section 2
INTRODUCTION

2.1 ARCING GROUND FAULTS

Arcing ground faults occur from one or more line conductors to grounded metal such as enclosures, conduit, or other similar equipment. The line-to-neutral voltage of a wye-connected system then causes fault current to flow in the line conductor, through the arc and back through the ground return path to the source. The combined impedance of the line conductor, arc and ground return path (enclosure, conduit, etc.) may be high or low, depending on the material, configuration, and type of connections. The impedance of the arc (virtually all resistance) may vary from high to low, depending on the arc's length, vaporized metal, surrounding environment, and other factors. As a result of all these factors, the current may be anywhere from a low to a high ampere level, and may increase or decrease as the fault persists.

High levels of fault current can be quickly detected by conventional overcurrent devices and immediately cleared without the use of GFP devices. Low levels of ground fault current may appear as a temporary overcurrent or as a normal load; and they may persist for many seconds, several minutes, or longer. The circuit conductors can generally tolerate these low-level currents for the time required to operate conventional overcurrent devices, but the same current flowing through the arc and high impedance ground path (conduit or enclosure) can produce extensive damage in the arcing area.

2.2 NEED FOR GROUND FAULT PROTECTION

The basic need for ground fault protection can be better understood by referring to the time-current curves of the properly applied overcurrent protective devices in a distribution system whether fuses or circuit breakers are used. Properly applied coventional overcurrent protective devices are designed to recognize faults in the overload and short circuit range and to initiate opening action accordingly. The nature of low-level arcing ground faults makes their detection impractical by conventional phase overcurrent devices. Unless ground fault protection is included, the system has no protection against low-level arcing ground faults.

2.3 STANDARDS

The requirements for Class I GFP devices are covered in Underwriters Laboratories, Inc. standard for *Ground Fault Sensing and Relaying Equipment,* UL 1053.

A Class I GFP device is one which does not incorporate means to prevent opening of the disconnecting means at high levels of fault current. It is intended for use with: (1) circuit breakers, (2) fused circuit breakers, (3) fused switches having an interrupting rating not less than 12 times their ampere rating, or (4) fused switches having integral means to prevent disconnection at levels of fault current exceeding the contact interrupting rating of the switch.

The Class II GFP devices defined in Underwriters Laboratories, Inc. standard for *Ground Fault Sensing and Relaying Equipment,* UL 1053 are intended for use with limited interrupting capacity disconnects and do incorporate means to prevent opening of the disconnecting means at excessive levels of fault current.

This application guide is directed to Class I GFP devices. Additional requirements for GFP devices, including shunt trip devices are covered in other standards including: ANSI-C37.16, ANSI-C37.17, NEMA AB1, UL 489, and UL 977. Standards are referenced in Section 1.

2.4 APPLICATION—GENERAL

GFP devices, when properly applied, will satisfy the requirements for the ground fault protection of service entrance equipment as outlined in Articles 230 and 517 of the *National Electrical Code.* When the above GFP devices are extended to include downstream feeder and branch circuits as well as the main disconnecting devices, additional protection will be provided and selective tripping on ground faults can be achieved. Therefore, for maximum continuity of service, GFP devices are recommended for downstream feeder and branch circuits as well as the main service disconnects. The additional installation of this equipment on downstream disconnecting devices provides for maximum continuity of electrical service as suggested in Article 230 and as required in Article 517 of the 1984 *National Electrical Code*. Equally effective results can be expected in separately derived systems when GFP devices are properly applied. See 3.10.

Special precautions should be taken to ensure that the selected disconnect means is capable of interrupting any fault current expected. Some switches are not designed to interrupt 12 times their ampere rating. Likewise, magnetic contactors are not required to have high fault current interrupting ratings and their use with GFP devices should be carefully reviewed.

2.5 RELAY SETTING SELECTIONS—GENERAL

It is essential that the entire distribution system be properly analyzed before GFP devices are selected and

Copyright National Electrical Manufacturers Association
Provided by IHS under license with NEMA
No reproduction or networking permitted without license from IHS
Not for Resale

their settings determined. Consideration must be given to the selection of GFP devices to achieve the best possible coordination of overcurrent and ground fault tripping. Improper coordination may result in nuisance tripping of the upstream device when a downstream device should have cleared the fault.

GFP device settings determine only the nominal current and time delay values at which an opening action is initiated. The actual amount of let-through energy is determined by the arcing fault current magnitude and the time that the fault is allowed to persist. GFP devices cannot limit the arcing current magnitude, they can only limit the length of time that a ground fault above the selected pick-up current setting is allowed to exist. Relay setting tolerances and operating times for the disconnects or protective devices to open and clear the fault must be included in any analysis of coordination or clearing speeds.

It may be advisable to consider different settings for the construction and operational phases of a project. Minimum settings should be selected during the construction phase while equipment is being installed and the probability of construction accidents is high. For the operational phase, in addition to protection, settings should allow for proper system coordination and provide optimum service continuity to avoid possible safety problems resulting from loss of lights, operating power required for elevators, exhaust fans and other safety oriented electrical loads. Loss of power resulting from too sensitive GFP device settings could cause more serious consequences than the equipment damage incurred as a result of a minor ground fault.

2.6 METHODS OF GFP DEVICE SELECTIVITY

There are two basic methods of achieving selectivity between GFP devices in a coordinated distribution system: (1) time-current band, and (2) zone selective. Each of these methods is described in Section 6.

2.7 DAMAGE LEVELS

Tolerable damage levels should be established for each system as a basis for selecting equipment and determining time and current settings of all devices. Appendix A illustrates the methods for calculating tolerable damage levels used in this Guide.

Copyright National Electrical Manufacturers Association
Provided by IHS under license with NEMA
No reproduction or networking permitted without license from IHS
Not for Resale

Section 3
POWER CIRCUIT

3.1 VOLTAGE

GFP devices are designed for use on power systems of *1000 volts or less*. They may be used on higher voltage power circuits if sufficient insulation and spacing is provided.

3.2 FREQUENCY

GFP devices should be used only on power circuits of the frequency for which they are marked or as recommended by the manufacturer.

3.3 CURRENT RATING

GFP devices are designed to withstand continuously a fault current at least equal to the maximum pick-up setting available on the relay. They should not be applied to a power circuit in such a way that a continuous unbalanced current in excess of the maximum continuous current rating can flow through the sensing device without being interrupted by the operation of the GFP device.

When GFP devices are applied to a system, their maximum permissible fault current rating must not be exceeded. This involves the calculation of the maximum ground fault current to which the devices may be subjected.

3.4 LOCATION OF GROUND FAULT SENSING DEVICES

The location of a ground fault sensing device defines the point beyond which downstream (in direction of power flow) ground faults can be detected. Consequently, it should be located as close to its associated disconnecting means as possible and is usually mounted immediately downstream from it. There are two basic methods of using ground fault sensing devices to detect ground fault current.

3.4.1 Ground Return Method

The ground fault sensing device detects the total ground current flowing in the grounding electrode conductor, the main bonding jumper and all other grounding connections to the neutral. This method can only be used for the main disconnect of services or separately derived systems.

3.4.2 Outgoing Circuit Method

The ground fault sensing device detects the ground current by making a vectorial summation of the phase and neutral (if any) currents. It is located downstream from the point at which the wiring system is grounded. Only this method can be used for feeders. It is also often used on the incoming main disconnect, multiple mains, and ties.

3.5 GROUND CONNECTIONS

If any grounding connection to the power system exists downstream of the main disconnect, neither basic method is adequate and the manufacturer should be consulted for recommendations.

Power supply systems exist in which there are multiple grounding connections, e.g., networks, multiple main disconnects, etc., and care must be exercised when applying ground fault protection to distribution systems fed from them. In general, the ground return method should not be used because multiple paths exist for the return of ground fault current to the source. Thus, if the ground return method is used in a switchboard fed by a network system, not only is there the possibility that the ground fault sensor will see only a part of the ground fault current originating in its own system (the remainder returning through the grounding conductors of other systems fed from the same source and via the source grounding connection), but it may also see some part of the ground fault current originating in any other system fed from the same source. Since the maximum setting permitted by Article 230 of the 1984 *National Electrical Code* is 1200 amperes and the available ground fault current from such a source is very high, it is very possible that a ground fault in one of the connected systems will trip any ground fault protective equipment of other systems fed from that source and using the ground return method.

3.6 MOUNTING AND CONNECTION OF GROUND FAULT SENSING DEVICES

Commonly used ground fault sensing devices are window or through-type magnetic devices. They should be mounted without undue mechanical stresses, twisting or misalignment being exerted by clamps, supports, bus bars or cables. Split sensing devices should have clean gaps or lamination stacks and be properly assembled and clamped.

Power conductor bus bars or cable should be symmetrically located in the ground fault sensor window. Clearances between conductors and the ground fault sensor body should be not less than those recommended by the manufacturer.

The manufacturer's instructions on the polarity of ground fault sensor secondary windings should be followed. Generally, the maintenance of polarity is not

Copyright National Electrical Manufacturers Association
Provided by IHS under license with NEMA
No reproduction or networking permitted without license from IHS
Not for Resale

necessary unless two or more are connected in parallel, but for differential or summation methods, winding polarity and mounting instructions must be observed and the manufacturer's wiring diagrams followed.

3.7 DELTA CONNECTED SYSTEMS

Although Article 230 of the 1984 *National Electrical Code* refers specifically and only to wye-connected solidly grounded systems, many delta-connected systems are solidly grounded at one corner or at the center point of one leg. They are also vulnerable to destruction by arcing ground faults and should be protected by GFP devices. Usually ground fault protection can be applied in the same way as for wye-connected systems.

3.8 NEUTRALS AND GROUNDING

Systems in which multiple individually grounded power sources are used, such as utility and emergency generator systems, need careful consideration. It is helpful if no tie exists between neutrals of multiple sources. Four-pole transfer switches are one way of breaking the neutral tie when sources are not connected in parallel. Relaying schemes are available which operate properly with continuous neutrals.

Care must be exercised when terminating equipment grounding conductors in a switchboard. They should never be connected to the neutral bus. All equipment grounding conductors must be terminated at the switchboard ground bus. In a system with a single power source, the switchboard ground bus should be connected to the neutral bus only within the main disconnect section and by means of a single conductor, i.e., the neutral grounding conductor or main bonding jumper. Multiple source systems require similar control of the connection(s). This is essential when the ground return method of sensing is used to ensure that all of the ground fault current returns to the source via the conductor(s) encircled by the GFP sensing device. It is also essential when the vectorial summation method is used, to avoid any ground connection to the neutral on the load side of any sensor in the switchboard.

3.9 NEED FOR COMPLETE SYSTEM INFORMATION

It is common for an engineer to be asked to design a switchboard, with no detailed knowledge of the supply other than the voltage, frequency, number of phases and possibly the fact that it is grounded. If ground fault protection is to be designed into the system, it is essential that complete information, including power sources and all grounding connections, be obtained.

3.10 SYSTEMS CONTAINING TRANSFORMERS

A ground fault protection system installed on the supply side (primary) of a transformer protects only the zone downstream as far as and including the transformer primary winding. If ground fault protection is required on the secondary side of the transformer, it must be treated as an entirely separate system.

It follows from the foregoing that the phase overcurrent protection on the primary side of any transformer in the distribution system must be properly coordinated with the GFP device nearest to the transformer secondary on the secondary side if nuisance tripping of the primary disconnecting means is to be avoided.

3.11 SYSTEM DESIGN

See the checklist in Appendix B.

Copyright National Electrical Manufacturers Association
Provided by IHS under license with NEMA
No reproduction or networking permitted without license from IHS
Not for Resale

Section 4
CONTROL CIRCUIT

4.1 CONTROL CIRCUIT VOLTAGE AND FREQUENCY

If required, control power may be ac or dc depending upon the requirements of the GFP devices and the disconnects. Voltage, frequency and permissible voltage regulation of the control power source should be in accordance with the nameplate and the manufacturer's instructions.

4.2 AC CONTROL POWER

The primary of a control transformer, if provided and supplied from the power circuit, must be connected line to line. If a control power transformer were connected line to neutral, its primary voltage could drop too low for satisfactory operation if a ground fault occurred on the phase to which the transformer was connected. All ac shunt trip devices suitable for use with GFP devices should operate down to at least 55 percent of rated voltage, and all ac auxiliary relays essential for the tripping function should also operate down to 55 percent of rated voltage unless supplied from a reliable separate control power source. (If supplied from a reliable separate control power source, conventional relays may be used.)

4.3 DC CONTROL POWER

Where freedom from line voltage fluctuations is required, control power can be supplied from battery systems designed to maintain at least 80 percent of rated voltage. Where dc control is used, proper polarity must be maintained and conventional dc shunt trips and relays may be used.

4.4 CONTROL CIRCUIT PROTECTION

When control power is taken from the power circuit ahead of the main disconnecting means or from a separate source, the control circuit conductors should have overcurrent protection. Control circuit overcurrent protective devices should have an interrupting rating adequate for the short-circuit current available. Conductors ahead of the control circuit overcurrent protection should be kept as short as possible. All control circuit equipment and wiring should be so located or protected as to minimize the possibility of control circuit damage from a power circuit arcing fault or other accident.

4.5 CONTROL WIRING

Trip or alarm circuits must be wired according to the manufacturer's instructions. In general, conductors supplying control voltage and carrying tripping currents should be not smaller than 14 AWG and should be run together. Conductors carrying low energy signals should be twisted pairs and isolated from power circuits to reduce noise pickup.

4.6 INDICATION AND TEST CIRCUITS

Ground fault protection systems may be equipped with indicators to show that a ground fault has occurred. Some systems include test circuits or monitor panels so that GFP devices can be tested without actually applying ground fault current through the ground fault sensors. (See Section 8.)

Some monitor panels or test circuits provide the options of: (1) testing a GFP device and actuating the ground fault indicators without tripping the disconnecting means, or (2) testing the GFP device, including tripping the disconnecting means and actuating the ground fault indicator.

4.7 COMPATIBILITY OF GFP DEVICES

If components are chosen separately, care should be taken to assure compatibility.

Copyright National Electrical Manufacturers Association
Provided by IHS under license with NEMA
No reproduction or networking permitted without license from IHS
Not for Resale

Section 5
TYPICAL APPLICATION DIAGRAMS

5.1 GENERAL

The following diagrams represent the basic methods of applying GFP devices. Other types of distribution systems will require variations of these methods to satisfy other system conditions.

These diagrams show circuit breakers as the disconnecting means. Any disconnecting means can be utilized, providing it is suitable for use with GFP devices as indicated in the scope of this application guide. The examples do not show protection against a ground fault on the supply side of the main disconnect.

Sensing device and disconnect locations define zones of protection. Source side and ground return sensors provide protection only on the load side of associated disconnects. If a vectorial summation method is used and its sensor(s) is (are) located on the load side of a disconnect, the zone between a source and the actual sensor location becomes the responsibility of the next upstream protective device.

5.1.1 Abbreviations

GFS ..... Ground Fault Sensor
GFR ..... Ground Fault Relay
M ..... Main Disconnect
3W ..... 3 Wire Load
4W ..... 4 Wire Load
ZSI ..... Zone Selective Interlocking

5.2 GROUND FAULT PROTECTION ON MAIN DISCONNECT ONLY (FIGURE 5-1)

Figure 5-1 illustrates the simplest method of applying a GFP device to a grounded wye, radial distribution system. This arrangement will satisfy the basic requirements as outlined in Article 230 of the 1984 *National Electrical Code*. This method can also be applied to separately derived systems.

Ground fault protection is provided for all points on the load side of the main disconnect. No protection is provided against a ground fault on the source side of the main disconnect.

No provisions are made for selective tripping for ground faults occurring on the load side of the downstream feeders other than the coordination that may exist between the GFP time-current settings and the time-current characteristics or settings of the downstream feeder and branch circuit overcurrent devices. Even if the 1200 ampere maximum current setting allowed in Article 230 of the 1984 *National Electrical Code* is used on the main ground fault relay, tripping of the main disconnect may occur for a ground fault on the load side of the feeder and branch circuits. This method is not recommended where continuity of service is required.

To ensure proper ground fault protection, additional grounding points (which could cause a division of the ground return current and improper relay sensing) must not be used.

Furthermore, equipment grounding conductors must not be connected to the neutral conductor.

5.3 GROUND FAULT PROTECTION ON MAIN DISCONNECT ONLY (FIGURE 5-2)

Figure 5-2 illustrates a simple method of applying a GFP device to a grounded wye, radial distribution system. This arrangement will satisfy the basic requirements of Article 230 of the 1984 *National Electrical Code*. This method can also be applied to separately derived systems.

Figure 5-2 differs from Figure 5-1 in that vectorial summation sensing is used instead of ground return sensing. The degree of protection and selectivity are the same as described in 5.2.

As an alternate arrangement, the ground fault sensor (GFS) shown on the load side of the main disconnect could be relocated on the supply side. No protection is provided against a ground fault on the supply side of the main disconnect in either location.

To ensure proper ground fault protection, no conductor on the downstream side of the ground fault sensor can be grounded or connected to equipment grounding conductors. Additional upstream grounding points produce no harmful effects.

5.4 GROUND FAULT PROTECTION ON MAIN AND FEEDER DISCONNECTS (FIGURE 5-3)

Figure 5-3 illustrates one method which can be used to improve service continuity in a grounded wye, radial distribution system employing GFP devices. In addition to the ground return sensing equipment shown in Figure 5-1, vectorial summation sensing equipment has been added on each downstream feeder. Selectivity of ground fault tripping between the main and feeder disconnects for a downstream fault can be achieved by the proper selection of time delay and current settings on the associated ground fault relays.

With proper selectivity, downstream disconnects will operate first without tripping of the main disconnect, thus providing for improved service continuity.

To ensure proper ground fault protection, additional grounding points which could cause a division of the

Copyright National Electrical Manufacturers Association
Provided by IHS under license with NEMA
No reproduction or networking permitted without license from IHS
Not for Resale

ground return current and improper relay sensing must not be used.

Furthermore, equipment grounding conductors must not be connected to the neutral conductor.

5.5 GROUND FAULT PROTECTION ON MAIN AND FEEDER DISCONNECTS (FIGURE 5-4)

Figure 5-4 illustrates another method which can be used to improve service continuity in a grounded wye, radial distribution system employing GFP devices. In addition to the vectorial summation sensing equipment shown on the main disconnect in Figure 5-2, vectorial summation sensing equipment has been added on each downstream feeder. Selectivity of ground fault tripping between the main and feeder disconnects for a downstream fault can be achieved by the proper selection of time delay and current settings on the associated ground fault relays.

With proper selectivity, downstream disconnects will operate first without tripping of the main disconnect, thus providing for improved service continuity.

To ensure proper ground fault protection, no conductor on the downstream side of the main ground fault sensor can be grounded or connected to equipment grounding conductors. Additional upstream grounding points produce no harmful effects.

5.6 GROUND FAULT PROTECTION ON MAIN AND FEEDER DISCONNECTS WITH ZONE SELECTIVE INTERLOCKING (FIGURE 5-5)

Figure 5-5 illustrates a method of achieving faster clearing of ground faults on the switchboard bus while maintaining continuity of service for faults on the feeder circuits by using ground fault relays which provide zone selective interlocking. In addition to the selectivity obtained between the main feeder ground fault relays shown in Figure 5-3, one other feature is provided; instantaneous (0.03 seconds or less) tripping of the main disconnect, regardless of the time setting, for a fault in the switchboard bus.

Zone selectivity interlocked relays provide instantaneous tripping on the associated disconnect unless a signal from a relay protecting a downstream feeder causes the relay to operate at its time delay setting.

To ensure proper ground fault protection, additional grounding points which could cause a division of the ground return current and improper relay sensing must not be used.

Furthermore, equipment grounding conductors must not be connected to the neutral conductor.

Care should be exercised to protect interlocking leads from the effect of electromagnetic interference during ground faults. One method is to use twisted pairs and to locate the leads remotely from the main power conductors.

5.7 GROUND FAULT PROTECTION ON MAIN, FEEDERS, AND SELECTED BRANCH DISCONNECTS WITH ZONE SELECTIVE INTERLOCKING (FIGURE 5-6)

Figure 5-6 also illustrates a method of achieving faster clearing of ground faults on the switchboard bus and feeder circuits while maintaining continuity of service for faults on the feeder circuits by using zone selective interlocking. With two exceptions, this method is similar to the one shown in Figure 5-6: (1) the main ground fault sensor is employed in vectorial summation fashion, and (2) additional ground fault protection equipment has been provided downstream on a selected branch circuit, load "A." Load "A" is the most likely to sustain a ground fault since it is more susceptible to insulation breakdowns than other types of loads in this example.

To ensure proper ground fault protection, no conductor on the downstream side of the main ground fault sensor can be grounded or connected to equipment grounding conductors. Additional upstream grounding points produce no harmful effects.

Care should be exercised to protect interlocking leads from the effect of electromagnetic interference during ground faults. One method is to use twisted pairs and to locate the leads remotely from the main power conductors.

5.8 DOUBLE-ENDED SYSTEM WITH GROUND FAULT PROTECTION ON MAINS, TIE AND FEEDER DISCONNECTS (FIGURE 5-7)

Figure 5-7 illustrates a double-ended system using dual power sources connected by a tie disconnect and using single point grounding as permitted by Section 250-23(a) of the 1984 *National Electrical Code,* exception number 4. The ground fault system shown is typical and is not representative of all methods in general use.

In this arrangement, the transformers must be grounded only at the neutral bus tie point. All neutral loads associated with source "A" or "B" must be connected on the source side of the related ground fault sensor either GFS/A or GFS/B. GFS/T associated with the tie disconnect is located directly on the grounding conductor between the neutral tie point and the grounding electrode. Vectorial summation sensing is used on the feeders.

When operating with the tie disconnect closed, supplementary interlocking will be required to compensate for neutral currents in sensors GFS/A and GFS/B. Consult the manufacturer for recommendations.

Copyright National Electrical Manufacturers Association
Provided by IHS under license with NEMA
No reproduction or networking permitted without license from IHS
Not for Resale

This system can be operated with the tie disconnect in either the open or closed position. The method of interlocking or the sensor location may vary depending on the type of equipment used. Consult the equipment manufacturer for recommendations.

Where minimum arcing fault damages are required, zone selective interlocking can be added. Consult the equipment manufacturer for recommendations.

Copyright National Electrical Manufacturers Association
Provided by IHS under license with NEMA
No reproduction or networking permitted without license from IHS
Not for Resale

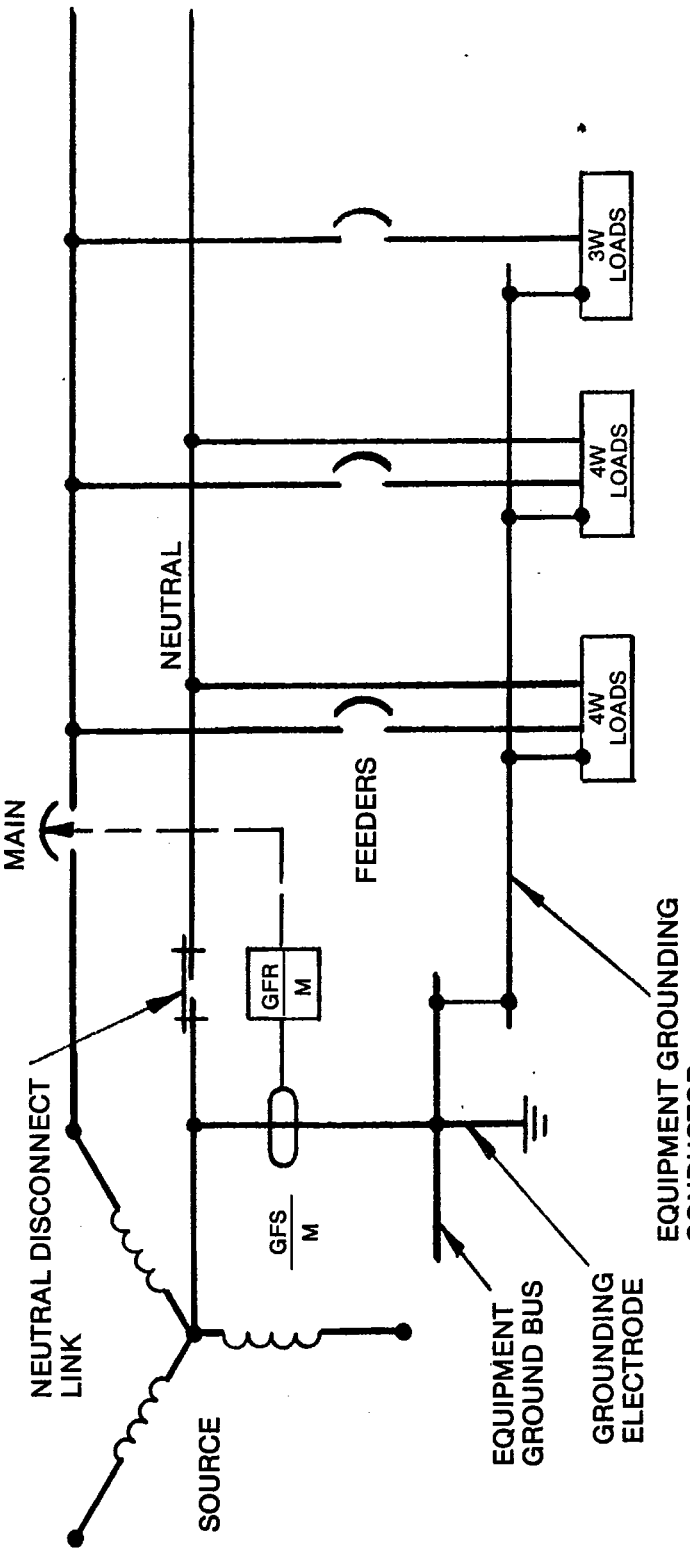

RECOMMENDED USE.....WHERE ONLY MINIMUM PROTECTION PER SECTION 230-95 OF THE *NATIONAL ELECTRICAL CODE* IS REQUIRED.

SELECTIVITY.....LIMITED SELECTIVITY: DEPENDS ON LOCATION OF FAULT AND RATING OF OVERCURRENT DEVICES ON THE UPSTREAM SIDE OF THE FAULT.

SENSING METHOD.....GROUND RETURN.

ADDITIONAL GROUNDING POINTS.....NONE

Figure 5-1
GROUND FAULT PROTECTION ON MAIN DISCONNECT ONLY

Copyright National Electrical Manufacturers Association
Provided by IHS under license with NEMA
No reproduction or networking permitted without license from IHS
Not for Resale

Copyright National Electrical Manufacturers Association
Provided by IHS under license with NEMA
No reproduction or networking permitted without license from IHS

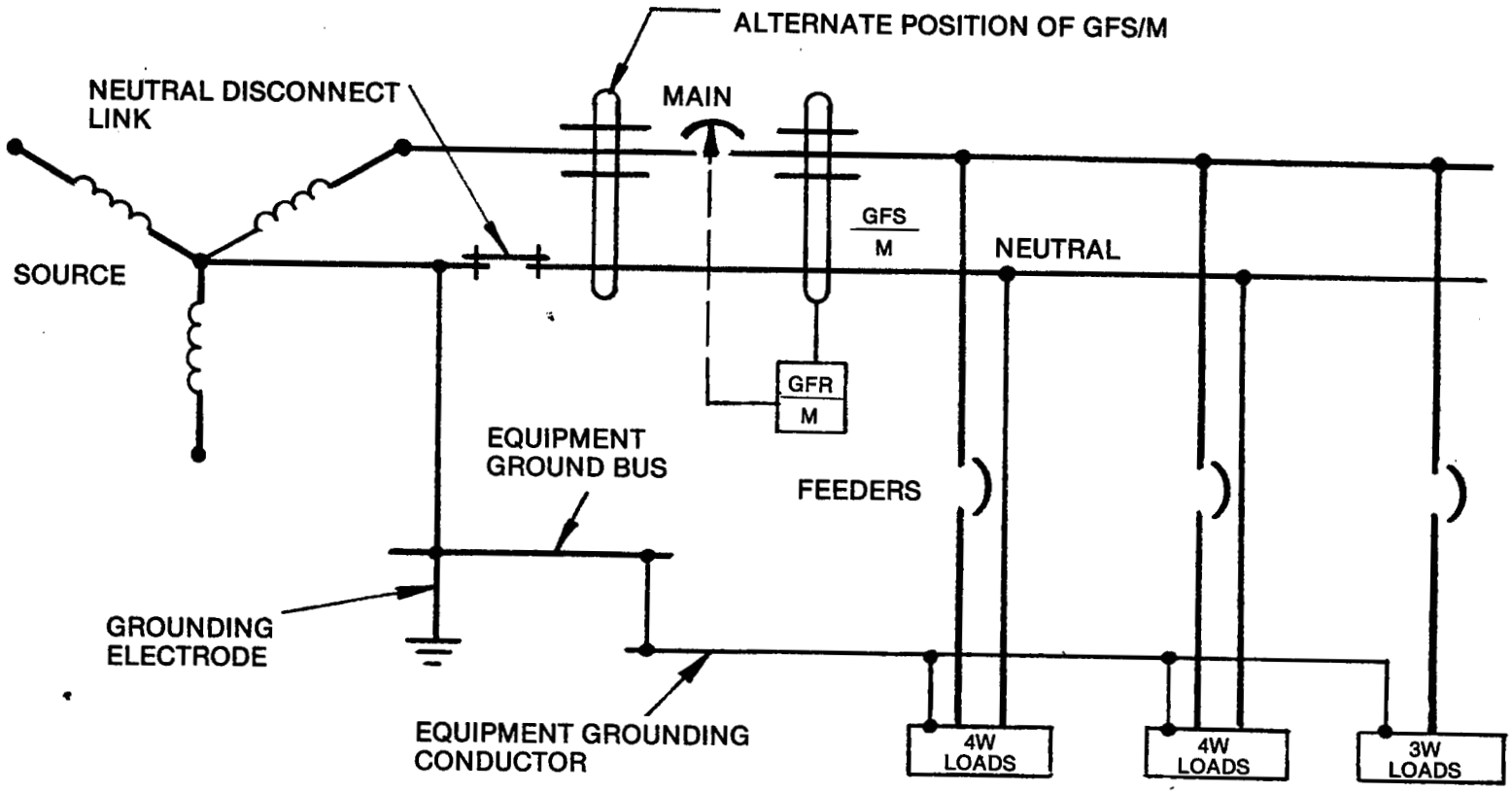

RECOMMENDED USE	WHERE ONLY MINIMUM PROTECTION PER SECTION 230-95 OF THE *NATIONAL ELECTRICAL CODE* IS REQUIRED.
SELECTIVITY	LIMITED SELECTIVITY: DEPENDS ON LOCATION OF FAULT AND RATING OF OVERCURRENT DEVICES ON THE UPSTREAM SIDE OF THE FAULT.
SENSING METHOD	VECTORIAL SUMMATION.
ADDITIONAL GROUNDING POINTS	MUST NOT BE DOWNSTREAM; CAN BE UPSTREAM.

Figure 5-2
GROUND FAULT PROTECTION ON MAIN DISCONNECT ONLY

Not for Resale

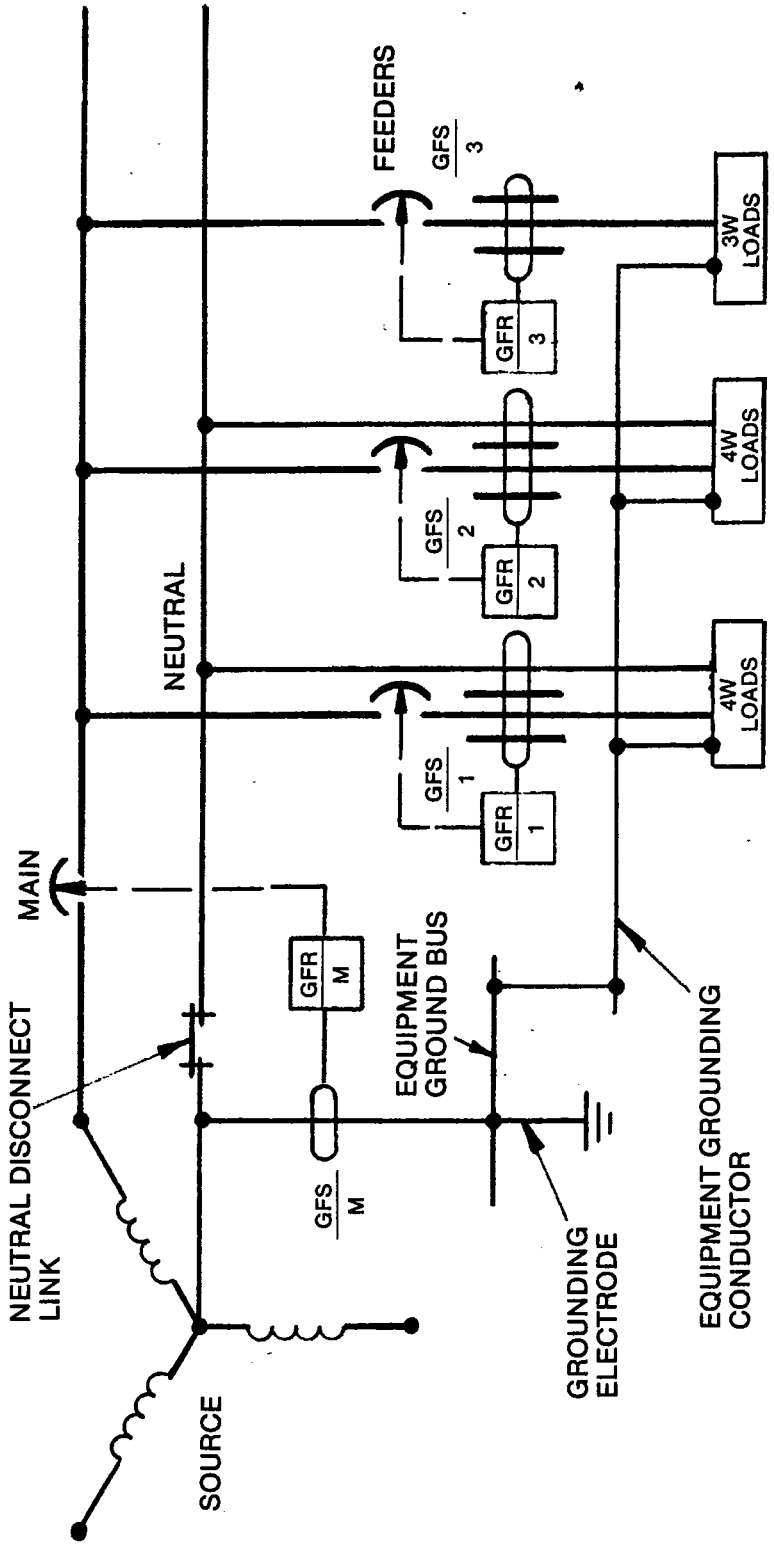

RECOMMENDED USE ..... WHERE IMPROVED SERVICE CONTINUITY IS REQUIRED.

SELECTIVITY ..... MAIN WILL NOT TRIP FOR FAULTS DOWNSTREAM OF FEEDER SENSORS.

SENSING METHOD ..... MAIN—GROUND RETURN
FEEDERS—VECTORIAL SUMMATION.

ADDITIONAL GROUNDING POINTS ..... NONE

Figure 5-3
GROUND FAULT PROTECTION ON MAIN AND FEEDER DISCONNECTS

Copyright National Electrical Manufacturers Association
Provided by IHS under license with NEMA
No reproduction or networking permitted without license from IHS
Not for Resale

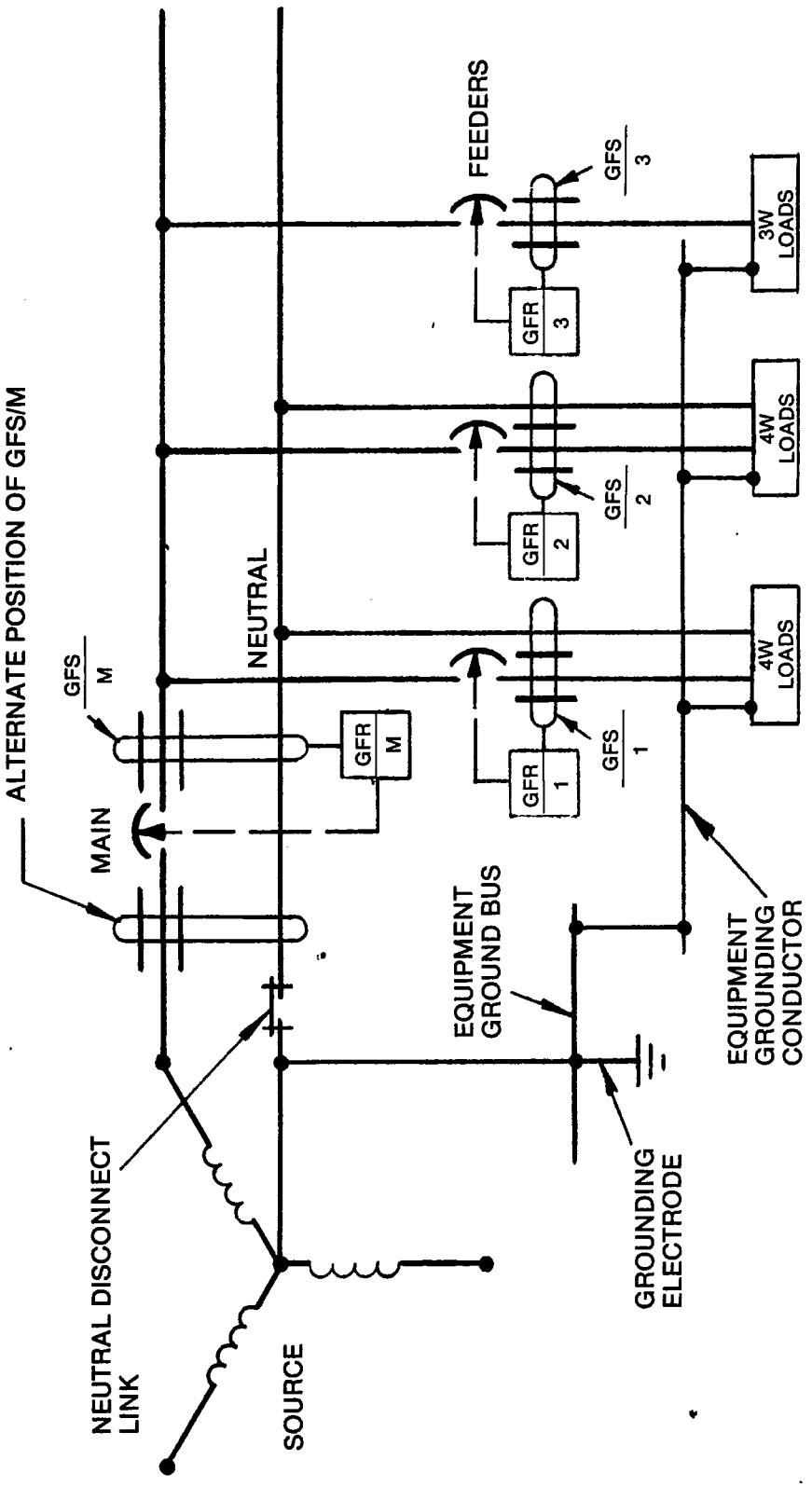

RECOMMENDED USE ..... WHERE IMPROVED SERVICE CONTINUITY IS REQUIRED.

SELECTIVITY ..... MAIN WILL NOT TRIP FOR FAULTS DOWNSTREAM OF FEEDER SENSORS.

SENSING METHOD ..... MAIN—VECTORIAL SUMMATION
FEEDERS—VECTORIAL SUMMATION.

ADDITIONAL GROUNDING POINTS ..... MUST NOT BE DOWNSTREAM OF MAIN GROUND FAULT SENSOR; CAN BE UPSTREAM.

Figure 5-4
GROUND FAULT PROTECTION ON MAIN AND FEEDER DISCONNECTS

Copyright National Electrical Manufacturers Association
Provided by IHS under license with NEMA
No reproduction or networking permitted without license from IHS
Not for Resale

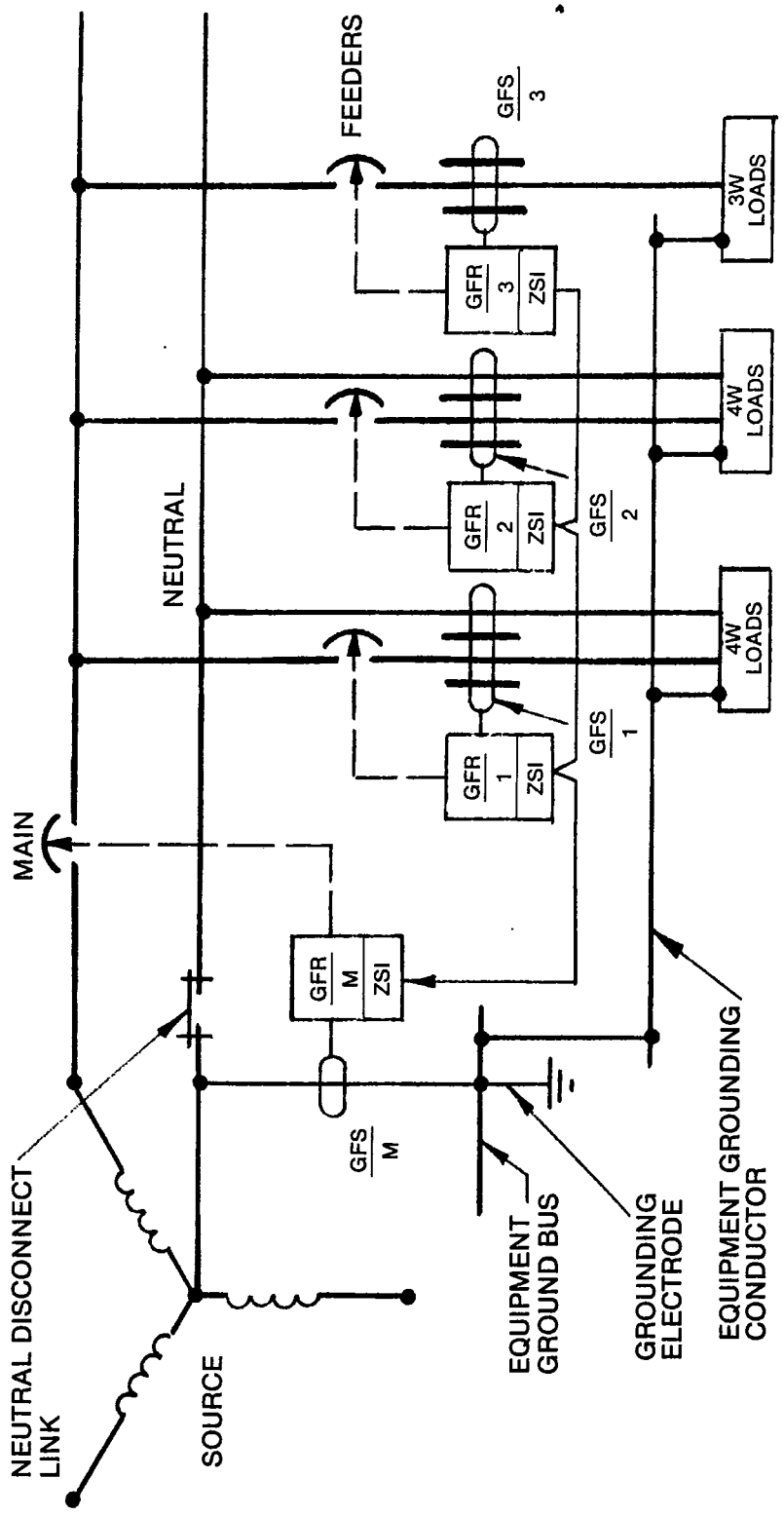

RECOMMENDED USE.....WHERE IMPROVED SERVICE CONTINUITY AND MINIMUM ARCING FAULT DAMAGES ARE REQUIRED.

SELECTIVITY.....MAIN WILL PROVIDE DELAYED BACK-UP PROTECTION IF FAULT IS DOWNSTREAM OF FEEDER SENSOR BUT WILL TRIP INSTANTANEOUSLY IF FAULT IS UPSTREAM OF FEEDER SENSOR.

SENSING METHOD.....MAIN—GROUND RETURN
FEEDER—VECTORIAL SUMMATION.

ADDITIONAL GROUNDING POINTS.....NONE

Figure 5-5
GROUND FAULT PROTECTION ON MAIN AND FEEDER DISCONNECTS WITH ZONE SELECTIVE INTERLOCKING

Copyright National Electrical Manufacturers Association
Provided by IHS under license with NEMA
No reproduction or networking permitted without license from IHS
Not for Resale

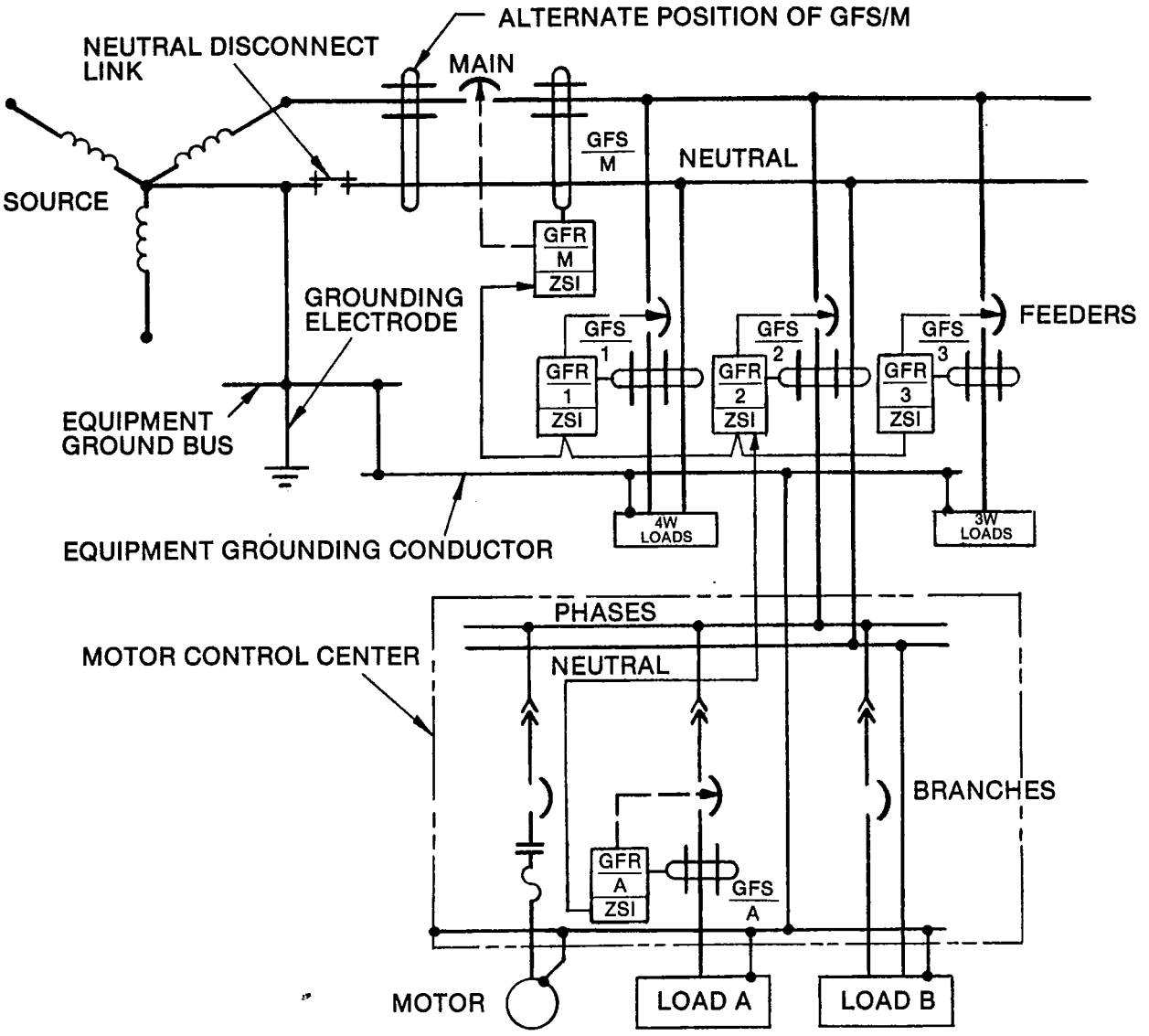

RECOMMENDED USE	WHERE IMPROVED SERVICE CONTINUITY AND MINIMUM ARCING FAULT DAMAGES ARE REQUIRED AND PROTECTION IS NEEDED ON BRANCH CIRCUITS.
SELECTIVITY	MAIN WILL PROVIDE DELAYED BACK-UP PROTECTION FOR FEEDERS AND PROTECTED BRANCHES. MAIN OR FEEDER WILL TRIP INSTANTANEOUSLY FOR A FAULT AHEAD OF THE NEXT DOWNSTREAM SENSOR.
SENSING METHOD	ALL LOCATIONS—VECTORIAL SUMMATION.
ADDITIONAL GROUNDING POINTS	MUST NOT BE DOWNSTREAM OF MAIN GROUND FAULT SENSOR; CAN BE UPSTREAM.

Figure 5-6
GROUND FAULT PROTECTION ON MAIN FEEDERS AND SELECTED BRANCH DISCONNECTS WITH ZONE SELECTIVE INTERLOCKING

Copyright National Electrical Manufacturers Association
Provided by IHS under license with NEMA
No reproduction or networking permitted without license from IHS
Not for Resale

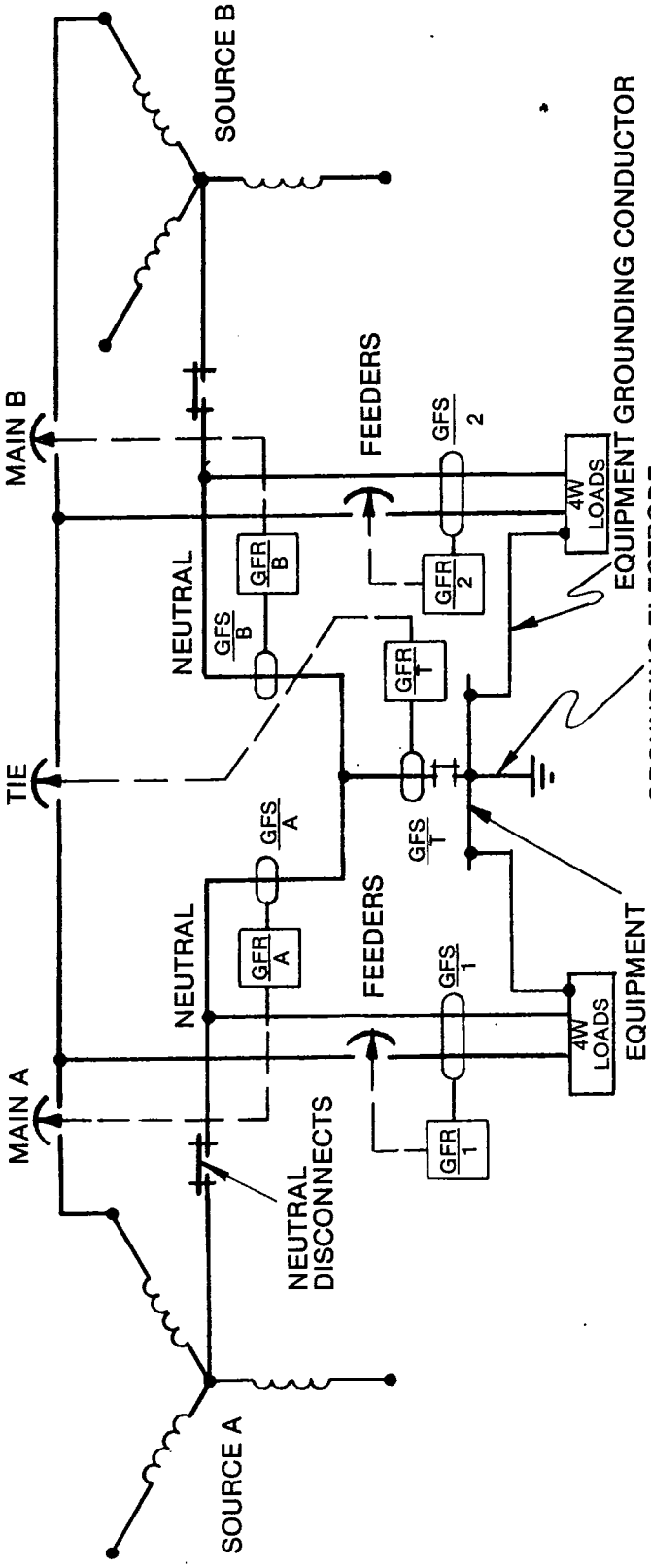

RECOMMENDED USE ..... DOUBLE-ENDED SYSTEMS WITH RELAYED TIE DISCONNECT WHERE MAXIMUM CONTINUITY OF SERVICE IS ESSENTIAL.

SELECTIVITY ..... MAIN WILL NOT TRIP FOR FAULTS DOWNSTREAM OF FEEDER SENSORS. WHEN OPERATING WITH THE TIE DISCONNECT CLOSED, THE TIE WILL TRIP BEFORE THE MAIN THUS SECTIONALIZING THE BUS. THE MAIN WILL NOT TRIP IF THE FAULT IS DOWNSTREAM FROM THE TIE DISCONNECT.

SENSING METHOD ..... MAINS AND TIE—GROUND RETURN
FEEDERS—VECTORIAL SUMMATION.

ADDITIONAL GROUNDING POINTS ..... NONE.

INTERLOCKING ..... SUPPLEMENTARY INTERLOCKING IS REQUIRED BUT WILL VARY DEPENDING ON EQUIPMENT USED.

Figure 5-7
DOUBLE-ENDED SYSTEM WITH GROUND FAULT PROTECTION ON MAINS AND ON TIE AND FEEDER DISCONNECTS

Copyright National Electrical Manufacturers Association
Provided by IHS under license with NEMA
No reproduction or networking permitted without license from IHS

Not for Resale

Section 6
TIME AND CURRENT SETTINGS

6.1 APPLICATION OF GROUND FAULT PROTECTIVE SYSTEMS FOR COORDINATED GROUND FAULT TRIPPING

Where continuity of service is required, a coordinated ground fault tripping system should be used. A coordinated ground fault tripping system is one in which disconnects are equipped with GFP devices and connected in series so that only the one nearest upstream of the ground fault will be caused to open.

6.2 TYPES OF COORDINATED GROUND FAULT TRIPPING SYSTEMS

Coordinated ground fault tripping systems may be of the time-current band selective type or the zone selective type or a combination of both.

6.3 TIME-CURRENT BAND SELECTIVE SYSTEM

In this system, the time-current characteristics of the GFP devices used with each disconnect are coordinated so that the nearest disconnect supplying the ground fault location will open. Any upstream disconnects remain closed and continue to supply the remaining load current.

Each set of GFP devices should have a specified time-current operating characteristic. When disconnects are connected in series, each downstream device should use a time-current band that will cause it to open and clear the circuit before any upstream disconnect opening mechanism is actuated. The time-current bands of disconnects in series must not overlap and must be separated from each other sufficiently to allow for the clearing time of each disconnecting means used.

The time-current band selective system is recommended for applications where the damage levels associated with the time-current bands used are tolerable. This type of system requires no interlocking wiring between the GFP devices associated with main, feeder and branch disconnecting devices.

6.4 ZONE SELECTIVE SYSTEM

In this system, each disconnecting means should open as quickly as possible when a ground fault occurs in the zone where this disconnect is the nearest supply source.

The GFP device for an upstream disconnecting means should have at least two modes of operation. If a ground fault occurs between it and the nearest downstream disconnect, it should operate in its fast tripping mode.

When a ground fault occurs beyond the downstream disconnect, the downstream GFP device should open in its fast tripping mode and simultaneously send a restraining signal back to the upstream device and transfer that device to a time-delay tripping mode. The upstream time-delay tripping characteristic selected should be such that the downstream disconnect will open and clear the circuit before the upstream disconnect opening mechanism is actuated. The time-current characteristic of the upstream device should be such as to offer back-up protection in the event of malfunction of the downstream equipment.

Alternatively, a restraining signal from a downstream device may be used to prevent the tripping of an upstream disconnect on ground fault instead of causing it to operate in the time-delay tripping mode. This may be done where back-up protection is less important than continuity of service to critical loads supplied by the upstream unit. There are very few instances in which this is justified, and a careful study of the entire system should be made before using this type of interlocking.

For a zone selective system, the time-current bands of disconnects in series, although used only for back-up protection, should not overlap and should be separate from each other sufficiently to allow for the opening time of each disconnecting means used.

The zone selective system provides fast tripping of the nearest disconnect upstream of the ground fault. The damage level is the lowest that is possible because the ground fault is cleared as quickly as the protective equipment can respond and the disconnect can open. Additional interlocking wiring and circuitry for sending and receiving the restraining signals are required.

6.5 COORDINATION OF LOW-VOLTAGE DISCONNECTS WITH THE HIGH-VOLTAGE SIDE OF A SYSTEM

It should be noted that continuity of service requires coordination of the ground fault protection for low-voltage disconnects with the rest of the system. For example, ground fault protection on the load side of a transformer bank should be properly coordinated with phase overcurrent devices or fuses on the high-voltage side.

6.6 COORDINATION WITH DOWNSTREAM OVERCURRENT DEVICES NOT EQUIPPED WITH GROUND FAULT PROTECTION

It is not usually possible to get complete coordination unless all downstream circuit breakers or fused disconnects (except for the lower rated ones) have ground fault protection. Therefore, ground fault protection should be used for all disconnects in the system far enough downstream to provide the required continuity of service.

Copyright National Electrical Manufacturers Association
Provided by IHS under license with NEMA
No reproduction or networking permitted without license from IHS
Not for Resale

For solidly grounded systems that are well designed, properly installed, properly maintained, and that have low equipment grounding conductor impedance back to the source (see Article 250 of the 1984 *National Electrical Code*), the current which would flow through a sustained arcing ground fault will usually be of sufficient magnitude to initiate fast response by 100 and 225 ampere overcurrent devices, without the use of GFP.

Therefore, tripping of an upstream main or feeder device with GFP is unlikely under this condition, providing:

1. The upstream device is rated 1000A or greater and its GFP has the maximum time delay and current pick-up settings allowed by Article 230 of the 1984 *National Electrical Code*.
2. The downstream device is rated no greater than 225 amperes and (a) it is a circuit breaker with its instantaneous trip set as low as possible, or (b) it is a switch equipped with non-time delay fuses.

Where it is not economically feasible to provide GFP devices on feeder and branch disconnects, two steps can be taken to minimize loss of coordination with upstream overcurrent protective devices having GFP.

1. Set the instantaneous trips on downstream devices as low as possible or use non-time delay current limiting fuses.
2. Set the time delay on the upstream ground fault relay as high as damage criteria allow. This gives the downstream ground fault time to self extinguish or escalate to a level which will trip the branch breaker or open the fuse before the GFP opens the upstream device.

6.7 TYPICAL SETTINGS

The following "ground rules" may be useful in establishing settings of Class 1 GFP devices. For other GFP devices, available settings may not include these numbers. Select appropriate values which provide similar protection.

6.7.1 Single Zone (Ground Fault Protection on Main Disconnect Only. See Figure 6-1.)

1. For minimum damage use 0.1-second time delay setting where the possibility of occasional tripping of the main disconnect can be tolerated when ground faults occur on branch or feeder circuits. Probable damage will be directly proportional to clearing time as indicated in Table A-2, Appendix A. Do not use instantaneous setting.

2. Use 0.2-, 0.3- or 0.5-second time delay setting when more than minimum damage can be tolerated and some additional gain in service continuity is needed. The added delay provides a greater probability of opening downstream overcurrent devices rather than tripping the main disconnect. Choose a time delay which permits selection or setting of the main overcurrent device in accordance with Table A-1, Appendix A. Use a 1200-ampere current setting for the main disconnect to achieve maximum service continuity.

6.7.2 Multiple Zone-Time Current Band Selective System (Ground Fault Protection on Mains, Feeders and Branch Circuits. See Figures 6-2 and 6-3.)

1. Use a time setting as short as possible and a current setting of 200 amperes or less for an individual branch circuit.

2. Use a time delay setting of 0.1 second and a current setting of 400 amperes or less for the furthest downstream feeder GFP device.

3. Use a 0.2 second longer time delay setting for a main or feeder disconnect than is used for the GFP device for the next downstream disconnect; except, use a 0.1 second longer time delay when the next downstream disconnect is a molded case circuit breaker or equally fast operating fused switch rated 800 amperes or less.

4. For a feeder or main circuit GFP device, use a current setting no lower than 167 percent of the current setting of the next downstream GFP device when the settings are continuously adjustable, or 133 percent when the settings are in fixed steps.

5. Set instantaneous and short time trip currents of related overcurrent devices in accordance with Table A-1, Appendix A, to the extent possible.

6.7.3 Zone Selective System (Ground Fault Protection on Mains and Feeders. See Figure 6-4.)

Use the same time delay and current settings as recommended in 6.7.2. The interlocking circuitry will normally provide approximately 0.03 second of time delay setting for a ground fault occurring anywhere on the system. The longer time delays that correspond to the dial settings will only occur when the GFP device nearest upstream of the fault fails to clear the fault and the one next further upstream operates as back-up protection. The operating time of the disconnect device must be taken into account.

Copyright National Electrical Manufacturers Association
Provided by IHS under license with NEMA
No reproduction or networking permitted without license from IHS
Not for Resale

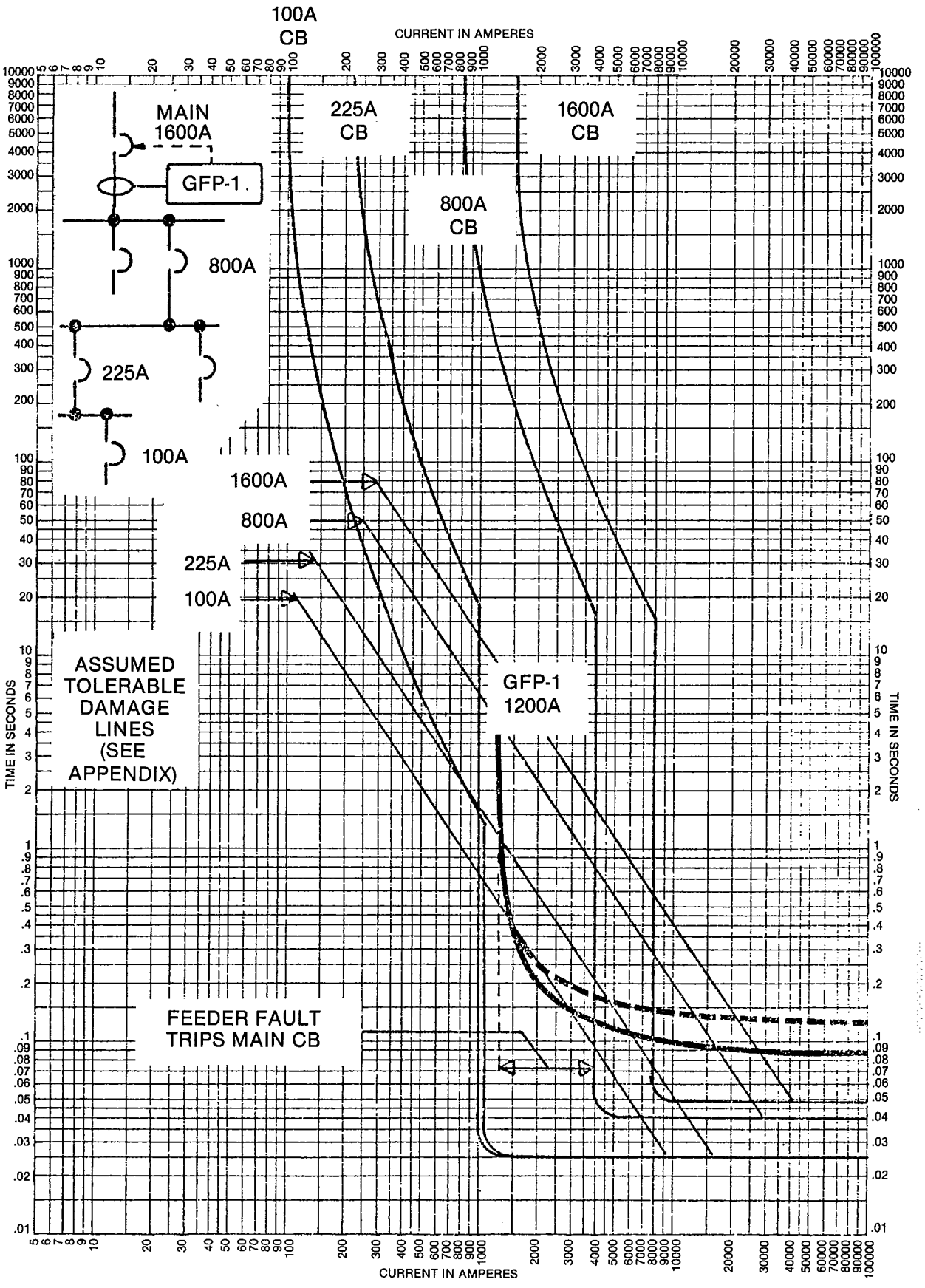

Figure 6-1
TYPICAL GROUND FAULT PROTECTION ON MAIN DISCONNECT ONLY

Copyright National Electrical Manufacturers Association
Provided by IHS under license with NEMA
No reproduction or networking permitted without license from IHS
Not for Resale

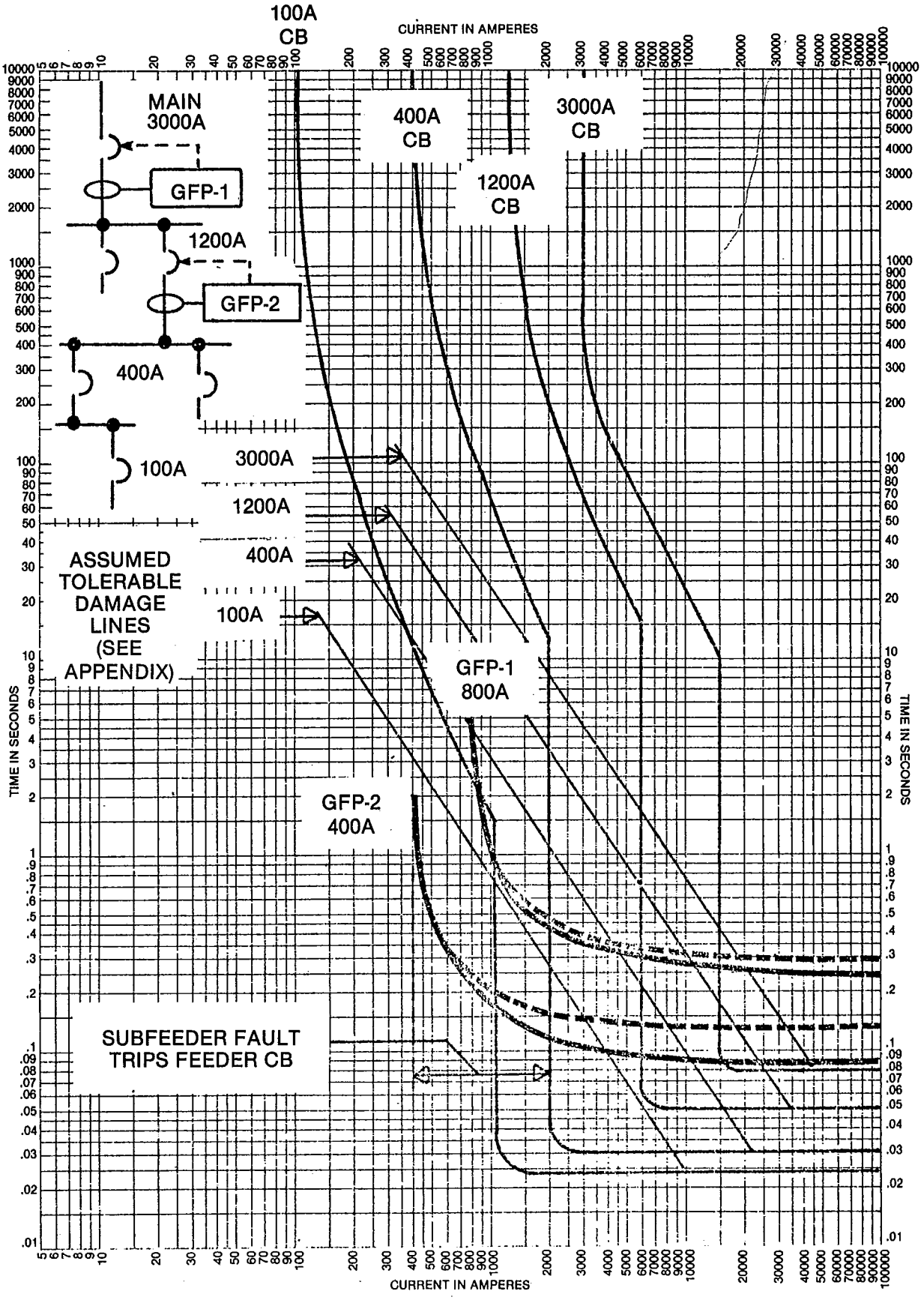

Figure 6-2
TYPICAL GROUND FAULT PROTECTION ON MAIN DISCONNECT AND FEEDERS

Copyright National Electrical Manufacturers Association
Provided by IHS under license with NEMA
No reproduction or networking permitted without license from IHS
Not for Resale
PROBLEM HARD COPY

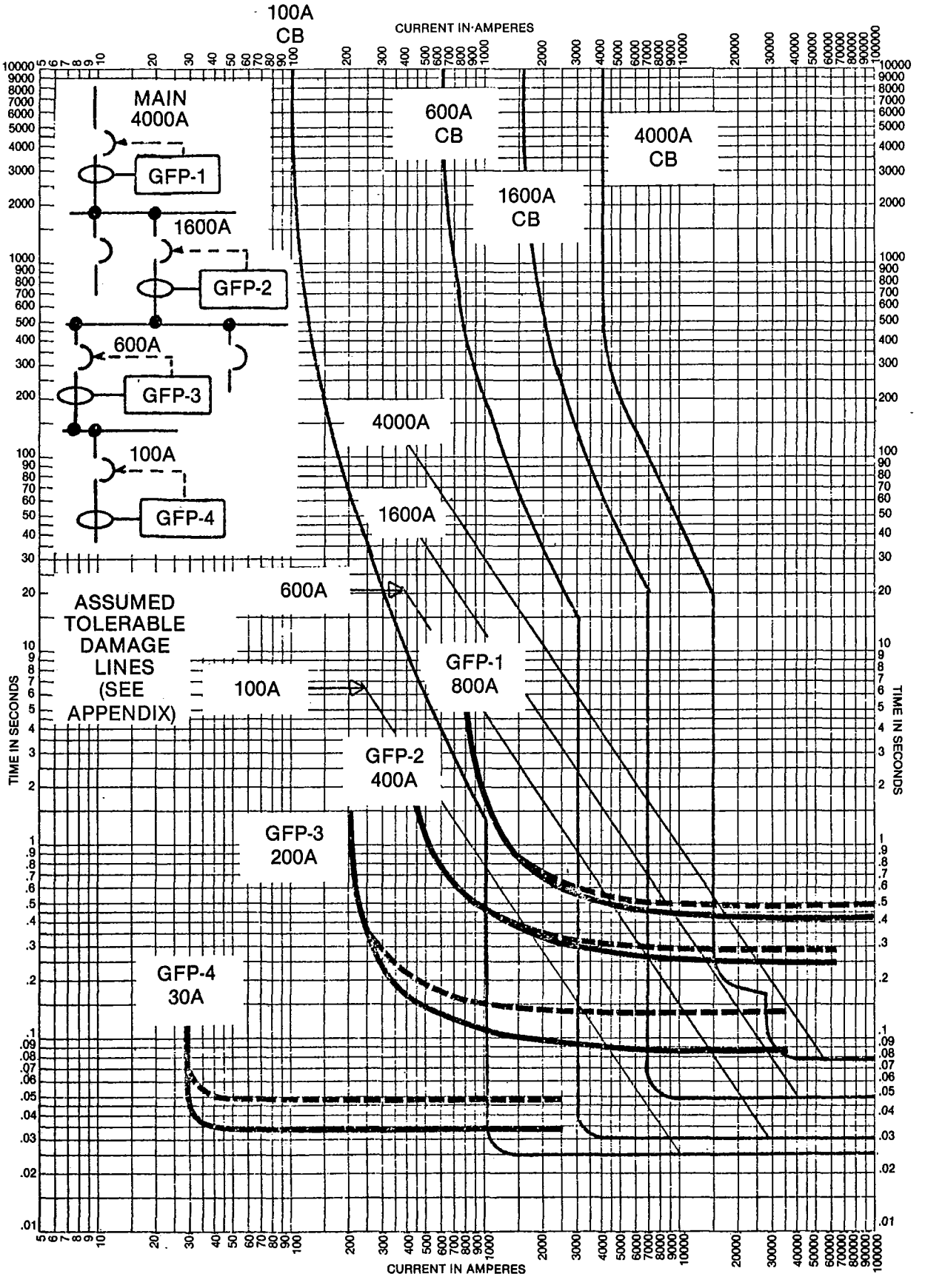

Figure 6-3
TYPICAL FULLY COORDINATED MULTIZONE GFP SYSTEM

Copyright National Electrical Manufacturers Association
Provided by IHS under license with NEMA
No reproduction or networking permitted without license from IHS

Not for Resale

PROBLEM HARD COPY

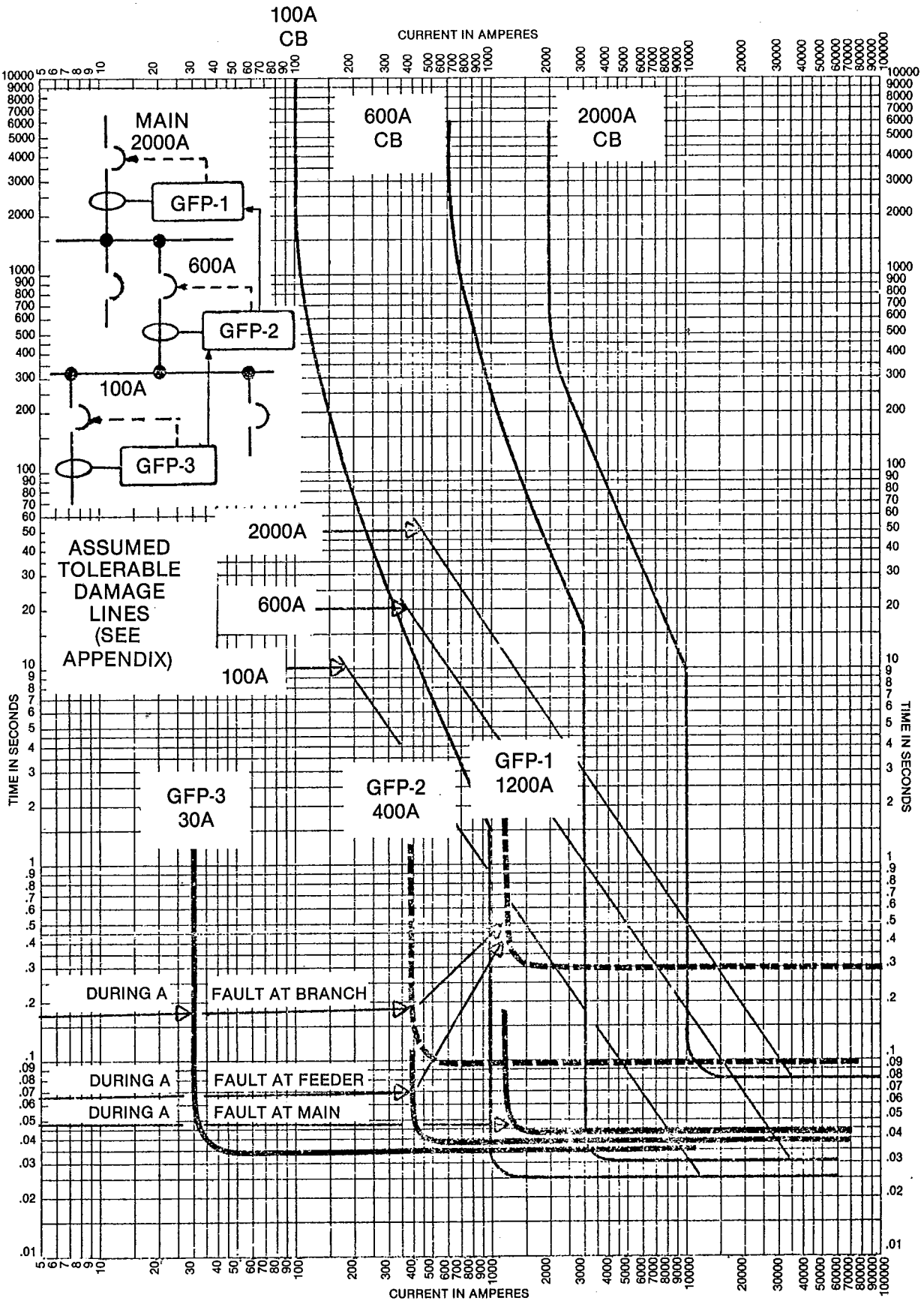

Figure 6-4
TYPICAL FULLY COORDINATED MULTIZONE GFP SYSTEM WITH ZONE SELECTIVE INTERLOCKING

Copyright National Electrical Manufacturers Association
Provided by IHS under license with NEMA
No reproduction or networking permitted without license from IHS
Not for Resale
PROBLEM HARD COPY

Section 7
TYPICAL COORDINATED SYSTEMS

7.1 COORDINATED PROTECTION

Coordinated protection of a power system against excessive ground fault damage requires a review of the time-current characteristics of all overcurrent and GFP devices in the fault path.

The current and time settings should be selected to satisfy, if possible, both the requirements for maximum continuity of service and minimum expected damage.

Typical recommendations of 6.7 are expressed in numerical values and apply to the majority of general applications. Similar recommendations and examples will be found in other publications and manufacturers' literature or instructions. Since the characteristics of breakers, fuses and GFP devices will vary, reference to coordination times and settings will be typical only. Specific manufacturers' literature should be referred to for detailed coordination studies. It should be realized, also, that power system configurations and ratings differ and that other factors often enter into the process of selecting and operating a system. For example, single arbitrary setting values will not cover all cases. The system designer is in a better position to evaluate the requirements, settings, and total operation than suppliers of components, devices or equipment. The system study should be one of the overriding concerns of specifiers and users of the distribution equipment.

It is strongly recommended that the process of establishing settings and checking coordination and service continuity be undertaken during initial planning to detect problems, check requirements and determine the number of necessary stages of ground fault protection. It should not be postponed until GFP devices are installed.

7.2 EXAMPLES

The following examples show selected portions of commonly used power distribution systems with various approaches to coordination including GFP devices.

The coordination curves in Figures 6-1 through 6-4 show some typical examples and are based on recommendations given in this Guide. The curves also illustrate various points discussed in the text concerning the degree of protection and the coordination. The discussion applies equally to GFP devices with inverse time or definite time characteristics. The solid lines on GFP curves represent the inherent characteristics of GFP devices. Dotted lines on Figures 6-1, 6-2 and 6-3 include the clearing times of the disconnecting means. Although these figures illustrate the use of circuit breakers for convenience, similar coordination curves can be drawn when fused disconnects are used with GFP devices. Inherent speeds of the circuit breakers are shown displaced in time for clarity reasons and do not imply selective coordination in the instantaneous trip areas.

The coordination discussed in the text also applies to double end (dual fed) power systems except that the effects of interlocking or control signals should be included in the evaluation.

7.2.1 GFP on Main Disconnect Only

Figure 6-1 shows a GFP device provided only on the main service disconnect and set at the maximum current level allowed by the 1984 *National Electrical Code*. (Refer to Figures 5-1 or 5-2 for a typical system.)

Any ground fault on the feeder or main circuits in excess of 1200 amperes and lasting through the time delay of GFP-1 will trip the main circuit breaker. The 100-ampere and 225-ampere circuit breakers are coordinated with GFP-1. There is lack of coordination between the main and 800-ampere feeder breaker for ground faults between 1200 and 4000 amperes. Similar lack of coordination, although at different fault levels, would exist if any other feeder or branch were rated 400, 600, 1000 or 1200 amperes.

Note that feeder circuits or main busses are not protected if ground faults of less than 1200 amperes develop in these parts of the system. A decrease in the GFP-1 pickup setting below 1000 amperes will result in lack of coordination with the instantaneous trip settings of 100- and 225-ampere circuit breakers.

7.2.2 GFP on Main Disconnect and Feeders

Figure 6-2 illustrates the improvement achieved by the addition of GFP devices to feeders. (See Figures 5-3 or 5-4.) It shows the minimum ground fault protection required by Article 517 of the 1984 *National Electrical Code* for health care facilities.

GFP-1 and GFP-2 are coordinated to obtain improved continuity of service in case of feeder or other downstream faults. GFP-1 will operate only on main bus ground faults or as a back-up for the feeder breakers.

There is a lack of coordination, similar to that shown in Figure 6-1 but now, in this case, between the 1200-ampere feeder and the 400-ampere subfeeder breaker for sustained ground faults between 400 and 2000 amperes. The major difference between these cases, however, is in greatly improved service continuity in other feeders.

Further improvements may be considered, e.g., lowering the settings of subfeeder and branch instantaneous trips (if possible), addition of GFP devices to selected subfeeders, etc.

Copyright National Electrical Manufacturers Association
Provided by IHS under license with NEMA
No reproduction or networking permitted without license from IHS
Not for Resale
PROBLEM HARD COPY

7.2.3 Fully Coordinated Multizone Ground Fault Protection Systems

Figure 6-3 represents an example of a completely coordinated ground fault protection system. Service continuity is achieved at all points of the power system and at any probable magnitude of the sustained ground fault below instantaneous trip settings. This multizone system allows a greater freedom of the instantaneous trip selection of the disconnecting means. These settings are controlled only by the need to accommodate given unbalanced start-up or inrush current conditions, operating/clearing time separation between bands, and tolerable damage levels.

In case of a ground fault, only the affected or faulty system section will be deenergized. If a downstream disconnect fails to clear the fault within the indicated time limit, the next upstream breaker will provide back-up protection.

Figure 6-4 shows a similar completely coordinated system which employs zone selective GFP devices that are interlocked to transfer operation of the upstream devices from one characteristic curve to another. Solid line curves represent the ground fault protection system operation when subjected to a main service fault. The dotted lines indicate conditions when a ground fault occurs at the feeder or branch circuits. The disconnect nearest to the fault will trip in a fast mode after setting the next upstream GFP device for a time-delay operation as a back-up (dotted lines).

Instantaneous trip settings depend only on accommodation of start-up or inrush currents and tolerable damage levels.

As in Figure 6-3, this scheme and coordination are designed to disconnect only the affected part of the power system.

Copyright National Electrical Manufacturers Association
Provided by IHS under license with NEMA
No reproduction or networking permitted without license from IHS
Not for Resale

Section 8
TESTING OF GROUND FAULT SENSING AND RELAYING EQUIPMENT

8.1 DESIGN TESTS

Prior to production, Class I ground fault sensing and relaying equipment undergoes extensive design testing in accordance with the requirements in Underwriters Laboratories Inc. standard for safety, *Ground Fault Sensing and Relaying Equipment,* UL 1053. These tests include the following:

(a) Temperature Rise
(b) Calibration
(c) Overvoltage
(d) Overload
(e) Endurance
(f) Dielectric Withstand

Other types of GFP devices are tested in accordance with applicable standards as listed in 2.3 of this Guide.

8.2 PRODUCTION TESTS

Production testing is conducted to determine that the current and time delay settings fall within performance limits. Relays equipped with zone interlocking circuitry are further tested to determine that the interlocking input and output circuits are responding to the proper signals. Current sensing transformers are subjected to turns ratio and dielectric withstand tests.

8.3 TESTS ON ASSEMBLED EQUIPMENT

After ground fault sensing and relaying equipment has been installed in the end-use equipment, such as a switchboard, additional testing should be performed before the assembly is shipped to the end user to determine that the GFP devices are properly installed and operate correctly.

When a simulated ground fault current is passed through the sensing transformer, the protective device should operate. The system should be tested with the relay set at representative current and time delay settings.

Following this test and with the simulated ground fault current no longer flowing, an attempt should be made to close the disconnect device (circuit breaker or swtich) without pushing any reset button. If the disconnect device will stay closed the simulated ground fault current should be reapplied and the ground fault protection system should function. This determines that the ground fault protection system will remain operational if the disconnect device is reclosed on a ground fault.

8.4 PREPARATION FOR FIELD TESTING

Before field testing GFP devices, confirm that the power system is designed and installed so that the ground fault protection can function properly. This should include a review of the electrical drawings and manufacturer's equipment drawings.

With the power off, remove the disconnect link on the switchboard to isolate the neutral of the wiring system from both supply and ground. Measure the insulation resistance of the neutral to ground with the main disconnect open to ensure that no ground connections exist downstream of the GFP devices being checked. For a dual fed (double-ended) power system, remove all the disconnect links to isolate the neutral from both the supply and ground before measuring the insulation resistance.

Visually inspect the wiring system to confirm there is an adequate grounding connection at the service equipment upstream of any ground fault sensor and that the neutral connection is run from the supply transfomrer to the service equipment in accordance with Article 250 of the 1984 *National Electrical Code,* where dual power sources are involved, confirm that the main grounding connection at the service equipment is in accordance with manufacturer's recommendations.

Once these steps have been accomplished and all neutral and ground connections returned to their normal intended operating condition, the field testing of ground fault protection systems can follow.

8.5 FIELD TESTING

Before field testing is initiated on any ground fault sensing and relaying equipment, the manufacturer's installation and instruction literature should be reviewed and understood. The manufacturer's field test recommendations should be followed.

Field testing should be limited to only those tests that are necessary to determine that installation is correct and the ground fault protection system is operational. Because of the many variables involved, field testing cannot be considered as an accurate check of the calibration of any sensing relay. Field test current sources can introduce errors due to non-sinusodial wave shapes, power source regulation problems and metering accuracy. In addition, timing measurements often include additional delay times due to the use of auxiliary relays and timers. Field testing should be limited to a GO/NO-GO type of testing which confirms the serviceability of the system involved.

Copyright National Electrical Manufacturers Association
Provided by IHS under license with NEMA
No reproduction or networking permitted without license from IHS
Not for Resale

APPENDIX A
ARCING FAULT DAMAGE LEVELS

A.1 APPROXIMATE ARCING FAULT DAMAGE LEVELS FOR 480/277 VOLT SYSTEMS

The damage caused by an arcing fault is a function of the amount of energy released in the arc. Based on empirical data from tests at 277 volts, the most practical expression for the damage level is: Material burnt away $= k(I_f)^{1.5}t$, where I_f is the single-phase arcing fault current and t is the time in seconds during which the fault persists. Thus the damage level may be expressed in (amperes) 1.5 seconds. Arc voltage and arc length need not be known with the range of spacings to ground of 1 through 4 inches. Straight lines representing constant damage can be plotted directly on time current curves (log-log scales) showing tripping characteristics of both phase overcurrent protective devices and ground fault protection equipment for coordination studies. These lines will have a slope of 1.5 and will be plotted for constant values of $(I_f)^{1.5}t$.

A.2 ARCING FAULT CURRENT

It is very difficult and not really necessary to predict the magnitude of arcing ground fault current since the impedance of the ground return path is not usually known. Instead the system should be designed to provide protection against any arcing fault current which is likely to occur.

A.3 ASSUMED TOLERABLE DAMAGE LEVELS

The arcing fault current will be determined by the circuit impedance, the voltage to ground and the length of the arcing path. The ground fault protection system does not limit or control the amount of this current.

Practical applications require increments of time delay for coordination to prevent the tripping of mains and feeders when ground faults occur on branch circuits. Therefore, some damage must be tolerated if undesirable tripping of mains and feeders is to be avoided.

The examples in this Guide assume that the system will be designed so that the maximum single-phase line-to-ground arcing fault damage level expressed in (amperes) 1.5 seconds (including the disconnect opening time) will be numerically no greater than 250 times the ampere rating of the overcurrent device protecting the circuit. For example, the maximum damage level for a circuit protected by an 800-ampere feeder disconnect would be 2.0×10^5 (ampere)$^{1.5}$ seconds. The maximum damage level for a circuit protected by a 2000 ampere main disconnect would be 5.0×10^5 (ampere)$^{1.5}$ seconds. These damage levels were selected to permit the practical coordination of main, feeder and branch circuits to avoid undesirable tripping.

When circuit breakers have ground fault protection with time delay for coordination, it will usually be necessary for a short time or instantaneous trip element to operate in order to clear high values of fault current in 0.1 second or less if the damage level is to be tolerable. The point where the ground fault trip curve (including clearing time) crosses the short-time or instantaneous trip curve will indicate the fault current value which is likely to produce the most damage. (See Figures 8-1 through 9-1.) Table A-1 shows the maximum current settings for the short time or instantaneous trip device which will limit the probable damage to the assumed tolerable values.

A.3.1

The formula used is: $I_S = \left(\frac{250I_r}{t + t'}\right)^{\frac{2}{3}}$

Where:

I_s = the current setting of the short-time delay or instantaneous trip device, in amperes.

I_r = the ampere rating of the disconnect or the current setting of its long time trip device.

t = the operating time of the GFP device, in seconds.

t' = the operating time of the disconnect, in seconds.

A.3.2

Assumed tolerable damage level lines can be plotted on log-log paper using any two of the $(t + t')$ and I_S values shown in Table A-1 for any specified I_r disconnect rating. If lower damage levels are required, it may be necessary to employ zone selective GFP devices or to sacrifice coordination. For convenience, these assumed tolerable damage level lines are plotted in Figure A-1.

A.4 PROBABLE AMOUNT OF DAMAGE

A.4.1

The empirical formula used in A.1.1 is:
Material burnt away in cu. in. $= k(I_f)^{1.5}t$.

A.4.2

For aluminum bus bars, k is approximately 1.52×10^{-6}.

For copper bus bars, k is approximately 0.72×10^{-6}.

For steel, k is approximately 0.66×10^{-6}.

Copyright National Electrical Manufacturers Association
Provided by IHS under license with NEMA
No reproduction or networking permitted without license from IHS
Not for Resale

Table A-1
Short Time or Instantaneous Trip Settings
(Recommended Calculated Maximum Current Settings in Kiloamperes, I_S)

$(t + t')$ Seconds	I_r in Amperes								
	800	1000	1200	1600	2000	2500	3000	4000	5000
0.15	12.1	14.1	15.8	19.2	22.4	26.0	29.3	35.4	41.1
0.20	10.1	11.6	13.1	15.9	18.4	21.4	24.2	29.2	34.0
0.25	8.64	10.0	11.3	13.7	15.9	18.4	20.8	25.2	29.3
0.30	7.63	8.86	10.0	12.1	14.1	16.3	18.4	22.3	25.9
0.35	6.89	7.99	9.02	10.9	12.7	14.7	16.6	20.1	23.4
0.40	6.30	7.31	8.26	10.0	11.6	13.5	15.2	18.4	21.4
0.45	5.82	6.76	7.63	9.24	10.7	12.5	14.1	17.0	19.8
0.50	5.43	6.30	7.12	8.62	10.0	11.6	13.1	15.9	18.4
0.55	5.10	5.91	6.67	8.09	9.38	10.9	12.3	14.9	17.3
0.60	4.81	5.58	6.30	7.63	8.86	10.3	11.6	14.0	16.3
0.65	4.56	5.29	5.98	7.23	8.40	9.75	11.0	13.3	15.5
0.70	4.34	5.03	5.69	6.89	8.00	9.28	10.5	12.7	14.7

A.4.3

The formula is used to calculate separately the amount of bus bar material burnt away and the amount of steel enclosure burnt away although the burning occurs simultaneously. K values may be different for voltages other than 480/277.

A.4.4

In the examples on the previous page, a fault on an 800-ampere feeder at the assumed tolerable damage level would be expected to destroy approximately:

1. 0.30 cubic inches of aluminum and 0.13 cubic inches of steel, or
2. 0.14 cubic inches of copper and 0.13 cubic inches of steel.

Similarly, a fault on a 2000-ampere main at the assumed tolerable damage level would be expected to destroy approximately:

1. 0.76 cubic inches of aluminum and 0.33 cubic inches of steel, or
2. 0.36 cubic inches of copper and 0.33 cubic inches of steel.

Copyright National Electrical Manufacturers Association
Provided by IHS under license with NEMA
No reproduction or networking permitted without license from IHS
Not for Resale

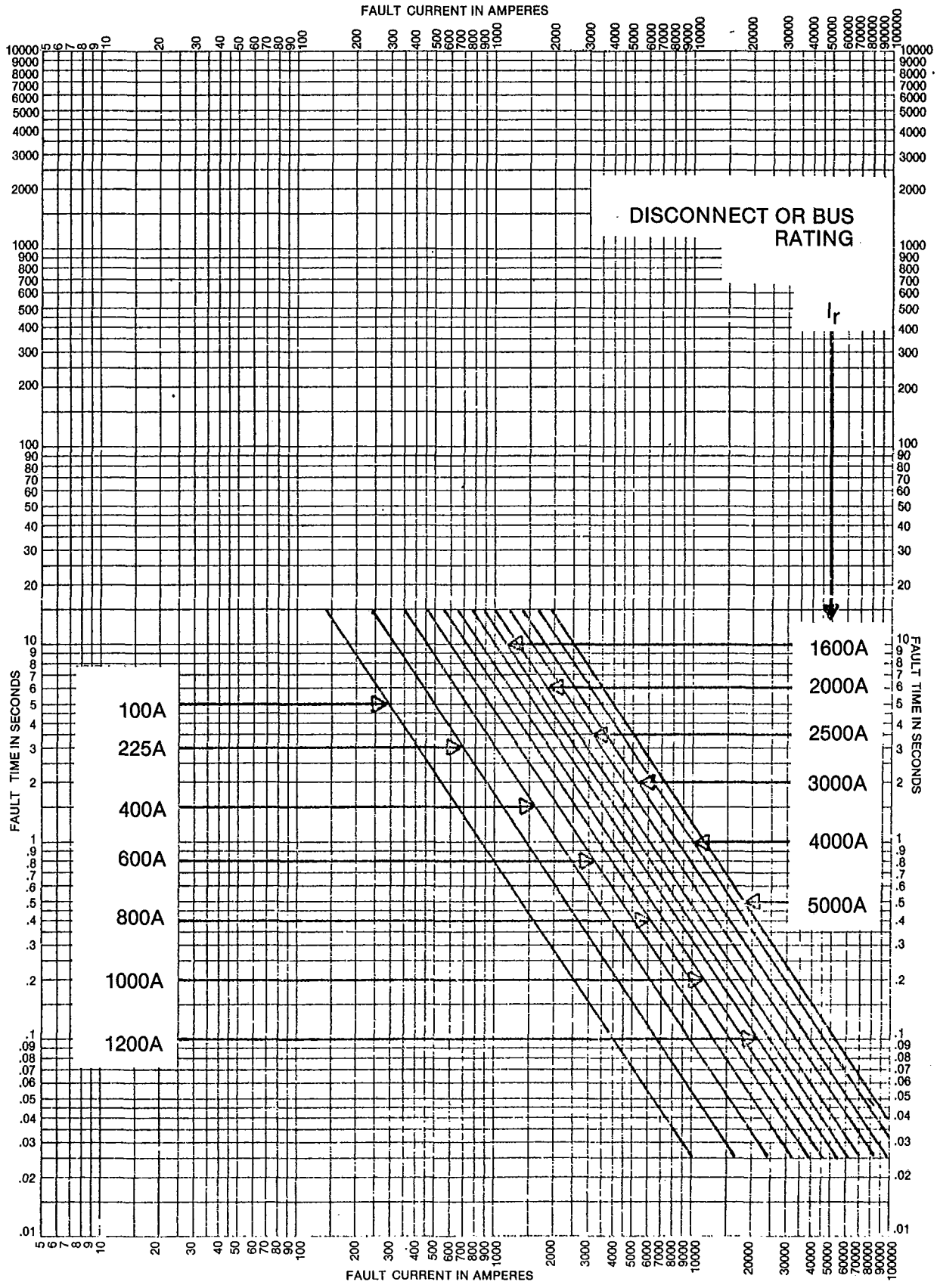

Figure A-1
ASSUMED TOLERABLE DAMAGE LEVELS

Copyright National Electrical Manufacturers Association
Provided by IHS under license with NEMA
No reproduction or networking permitted without license from IHS

Not for Resale

PROBLEM HARD COPY

Appendix B
SYSTEM DESIGN CHECKLIST

B.1 GENERAL

Ground fault protection for equipment should be carefully planned to assure a reliable and coordinated system. The power system evaluation for possible ground faults should be conducted concurrently with the design for the phase-overcurrent protection. This checklist suggests design considerations which could eliminate some application pitfalls.

B.2 POWER SYSTEM

- Prepare a complete system diagram and include all neutral and ground conductors. Check where and which conductors of the incoming or associated sources are grounded. Show main bonding jumpers, equipment grounding conductors, grounding electrode conductor and disconnect link locations, especially in dual service and spot network applications.
- Determine possible modes of electrical equipment protection requirements.
- Consider the desirability of selective coordination of phase-over current devices in the system.

B.3 GROUND FAULT CURRENT PATHS

- Examine possible paths of ground fault currents and determine where sensors should be located to detect ground faults at various points of the system.
- In case of split ground fault current paths, consider elimination of multiple ground points or sectionalization of the neutral bus.
- Determine effects of existing grounds at the utility or alternate sources.
- If the system contains ties or alternate sources, repeat the evaluation for all possible operating conditions. Determine the effects of a transfer to a stand-by or emergency source. Consider use of isolation transformers, transfer switching of the neutral conductor or special ground fault sensing devices in order to permit grounding of the generator neutral at its location without jeopardizing ground fault protection.

B.4 GROUND FAULT PROTECTIVE DEVICES AND SETTINGS

- Select compatible GFP sensors and relays.
- Determine GFP device withstand requirements under fault and steady state conditions. Check maximum single phase, unbalanced load or circulating currents and their effect on current setting requirements.
- Select relay current and time settings to provide for selectivity and continuity of service under various operating conditions. Review back-up protection requirements.
- Determine the necessary interlocking and interwiring. Provide the necessary circuits, auxiliary devices, contacts or signals to reset ground fault relays and alarm circuits, and to disconnect shunt trip coils.

B.5 CONTROL POWER

- Provide control power sources of proper voltage, polarity and frequency, with sufficient power capacity to avoid excessive dips and surges during tripping or tests. Consider the effects of a control power loss and the need for an alternate control power source.
- Check for variation of control voltage, including boosting effect of battery charges.
- provide overcurrent protection for control power sources, if required.

Copyright National Electrical Manufacturers Association
Provided by IHS under license with NEMA
No reproduction or networking permitted without license from IHS
Not for Resale

September 1984

NEMA STANDARDIZATION

The purpose of NEMA Standards, their classification and status are set forth in certain clauses of the NEMA Bylaws, which are quoted below:

Purpose of Standards

National Electrical Manufacturers Association Standards are adopted in the public interest and are designed to eliminate misunderstandings between the manufacturer and the purchaser and to assist the purchaser in selecting and obtaining the proper product for its particular need. Existence of a National Electrical Manufacturers Association Standard does not in any respect preclude any member or nonmember from manufacturing or selling products not conforming to the standard.

(Bylaw—Art. V, Sec. 1)

Definition of a Standard

A standard of the National Electrical Manufacturers Association defines a product, process or procedure with reference to one or more of the following: nomenclature, composition, construction, dimensions, tolerances, safety, operating characteristics, performance, rating, testing, and the service for which they are designed.

(Bylaw—Art. V, Sec. 2, Subsection A)

Dimensions

Where dimensions are given for interchangeability purposes, alternate dimensions satisfying the other provisions of the standards publication may be capable of otherwise equivalent performance.

(NEMA Policy Memorandum 84-2, dated June 7, 1984)

Classes of Standards

National Electrical Manufacturers Association Standards are of two classes:

1. NEMA Standard, which relates to a product commercially standardized and subject to repetitive manufacture, which standard has been approved by at least 90 percent of the members of the Subdivision eligible to vote thereon;
2. Suggested Standard for Future Design, which may not have been regularly applied to a commercial product, but which suggests a sound engineering approach to future development, which standard has been approved by at least two-thirds of the members of the Subdivision eligible to vote thereon.

(Bylaw—Art. V, Sec. 2, Subsection B)

Authorized Engineering Information

Authorized Engineering Information consists of explanatory data and other engineering information of an informative character not falling within the classification of NEMA Standard or Suggested Standard for Future Design.

(Bylaw—Art. V, Sec. 6, 1st Sentence)

Official Standards Proposal

An Official Standards Proposal is an official draft of a proposed standard which is formally recommended to an outside organization(s) for consideration, comment and/or approval.

(Bylaw—Art. V, Sec. 4, Subsection A)

Identification of Status

Standards in NEMA Standards Publications are identified in the foreword or following each standard as "NEMA Standard" or "Suggested Standard for Future Design." These indicate the status of the standard. These words are followed by a date which indicates when the standard was adopted in its present form by the Association.

The material identified as "Authorized Engineering Information" and "Official Standards Proposal" is designated similarly.

Copyright National Electrical Manufacturers Association
Provided by IHS under license with NEMA
No reproduction or networking permitted without license from IHS
Not for Resale

PANELBOARD AND DISTRIBUTION BOARD SECTION

OF THE

NATIONAL ELECTRICAL MANUFACTURERS ASSOCIATION

MEMBER COMPANIES

Anchor Electric
A Unit of General Signal Corp.
Manchester, NH 03105

Challenger Corp.
Danvers, MA 01923

Crouse-Hinds Company
Earlysville, VA 22936

Custom Switchgear and Controls, Inc.
Santa Clara, CA 95051

Eaton Corp./Cutler Hammer Products
Milwaukee, WI 53216

Erickson Electrical Equipment Co.
Chicago, IL 60630

Federal Pacific Electric Co.
Raleigh, NC 27607

General Electric Company
Plainville, CT 06062

Harvey Hubbell, Inc.
Orange, CT 06477

I-T-E Electrical Products
A Div. of Siemens-Allis, Inc.
Tucker, GA 30084

Milbank Manufacturing Co.
Kansas City, MO 64141

Nix and Miller, Inc.
Buford, GA 30518

Penn Panel and Box Company
Collingdale, PA 19023

Power Controls, Inc.
Commerce, CA 90040

The Pringle Electrical Manufacturing Co.
Fort Washington, PA 19034

Square D Company
Palatine, IL 60067

Superior Switchboard & Devices
Canton, OH 44702

Unicorn Electrical Products
Anaheim, CA 92806

The Wadsworth Electric Mfg. Co., Inc.
Covington, KY 41012

Westinghouse Electric Corp.
Pittsburgh, PA 15222

Copyright National Electrical Manufacturers Association
Provided by IHS under license with NEMA
No reproduction or networking permitted without license from IHS
Not for Resale