9009279 0004025 848

Pub. No. PB 2.1-1979

# INSTRUCTIONS FOR SAFE HANDLING, INSTALLATION, OPERATION, AND MAINTENANCE OF DEADFRONT DISTRIBUTION SWITCHBOARDS RATED 600 VOLTS OR LESS

RETAIN
FOR USE OF
MAINTENANCE PERSONNEL

NATIONAL ELECTRICAL MANUFACTURERS ASSOCIATION ■ 2101 L STREET, N.W., WASHINGTON, D.C. 20037

Copyright National Electrical Manufacturers Association
Provided by IHS under license with NEMA
No reproduction or networking permitted without license from IHS
Not for Resale

9009279 0004026 784

# TABLE OF CONTENTS


| | | Page |
|---|---|---|
| Part I | GENERAL | 1 |
| Part II | HANDLING | 1 |
| Part III | STORAGE | 2 |
| Part IV | INSTALLATION OF SWITCHBOARD OR ENCLOSURE | 4 |
| Part V | INSTALLATION OF CONDUIT AND WIRES | 5 |
| Part VI | INSTALLATION OF SWITCHBOARD INTERIOR | 6 |
| Part VII | STEPS TO BE TAKEN BEFORE ENERGIZING | 6 |
| Part VIII | ENERGIZING EQUIPMENT | 8 |
| Part IX | CARE AND MAINTENANCE | 9 |
| Part X | PERMISSIBLE LOADING OF SWITCHBOARDS | 10 |


© 1979 by National Electrical Manufacturers Association

Copyright National Electrical Manufacturers Association
Provided by IHS under license with NEMA
No reproduction or networking permitted without license from IHS
Not for Resale

# NEMA INSTRUCTIONS FOR SAFE HANDLING, INSTALLATION, OPERATION, AND MAINTENANCE OF DEADFRONT DISTRIBUTION SWITCHBOARDS RATED 600 VOLTS OR LESS

*(Approved as Authorized Engineering Information 9-6-1979.)*

This publication is a guide of practical information containing instructions for the safe and proper handling, installation, operation, and maintenance of deadfront distribution switchboards rated 600 volts or less. These recommendations of the Panelboard and Distribution Board Section of the National Electrical Manufacturers Association will be found useful by architects, electrical engineers, electrical contractors, electricians, maintenance engineers, and others. They will be reviewed periodically by the Section for the purpose of updating them to reflect advancing technology. Please address any comments or questions you may have on the text to:

Manager, Engineering Department
National Electrical Manufacturers Association
2101 L Street, N.W.
Washington, DC 20037

Publication No. PB 2.1-1979 revises and supersedes PB 2.1-1977.

## Part I
## GENERAL

The successful and safe operation of switchboards is dependent upon proper handling, installation, operation, and maintenance, as well as upon proper design and manufacture. Neglecting certain fundamental installation and maintenance requirements may lead to personal injury and the failure and loss of the switchboard as well as damage to other property.

**WARNING**—THERE IS A HAZARD OF ELECTRIC SHOCK OR BURN WHENEVER WORKING IN OR AROUND ELECTRICAL EQUIPMENT. TURN OFF POWER SUPPLYING THIS EQUIPMENT BEFORE WORKING INSIDE SWITCHBOARDS.

## Part II
## HANDLING

These guidelines are provided to help avoid personal injury and equipment damage during handling, as well as to facilitate moving the switchboard at the job site.

1. Follow the manufacturer's handling instructions for the specific equipment, if available.
2. Handle the switchboard with care to avoid damage to components and to the frame or its finish.
3. Keep the switchboard in an upright position unless otherwise indicated by the manufacturer.
4. Know the capabilities of the moving means available to handle the weight of the switchboard.



Copyright National Electrical Manufacturers Association
Provided by IHS under license with NEMA
No reproduction or networking permitted without license from IHS
Not for Resale

5. When the switchboard is received, unpack it sufficiently to inspect it for concealed damage and to determine that the shipment is complete and correct.
6. If the switchboard is to be stored for any length of time prior to installation, restore the packing for protection during that period. Where conditions permit, leave the packing intact until the switchboard or sections are at their final installation position. If the packing is removed, cover the top and openings of the equipment during the construction period to protect them against dust and debris. (See Part III.)
7. The switchboard should remain secured to the shipping skid to prevent distortion of the bottom of the frame during moving.
8. Rod or pipe rollers, with the aid of pinch bars, provide a simple method of moving the switchboard on one floor level if there is little or no incline. Steady the load to prevent tipping.
9. A forklift truck may offer a more convenient method of handling the switchboard and has the added advantage of permitting it to be hoisted between levels. Balance the load carefully and steady a topheavy switchboard as necessary while moving.
10. When it is necessary to move the switchboard between elevations without a suitable platform elevator, overhead hoisting may be required. Lifting plates and eye bolts (Fig. 1), or channels, angles, or bars with lift holes (Fig. 2) may be provided as a permanent or removable part of the switchboard. If they are not, cable, chain or band slings (Fig. 3) may be rigged around the switchboard.
    a. Use spreaders (Fig. 1) or spanner bars (Fig. 3) to provide the vertical lift on eyebolts and lifting slings to avoid crushing or otherwise damaging the frame or its finish. Lifting bars on long lineups may require additional spreaders to reduce the horizontal compressive load.
    b. Select or adjust the rigging lengths to compensate for any unequal weight distribution of load and to maintain the switchboard in an upright position.
    c. Do not allow the angle between the lifting cables and vertical to exceed 45 degrees in order to reduce the tension on the rigging and the compressive load on the lifting or spanner bars and spreaders.
    d. Do not pass ropes or cables through the lift holes in bars, angles, or channels. Use slings with safety hooks or shackles.
    e. The switchboard may contain a heavy transformer with overhead lifting means. Consult the manufacturer regarding the removal of the switchboard top covers and the utilization of such internal lifting means.

## Part III
## STORAGE

1. An indoor switchboard which is not installed and energized immediately should be stored in a clean dry space having a uniform temperature to prevent condensation. Preferably, it should be stored in a heated building having adequate air circulation and protected from dirt and water.
2. An indoor switchboard that must be stored outdoors should be securely covered for protection from weather and dirt. Temporary electrical heating should be installed to prevent condensation; approximately 250 watts per section is adequate for the average switchboard size and environment.
3. An unenergized outdoor switchboard should be kept dry internally by installing temporary heating (see item 2) or by energizing self-contained space heaters.



Copyright National Electrical Manufacturers Association
Provided by IHS under license with NEMA
No reproduction or networking permitted without license from IHS
Not for Resale

**Fig. 1**
**LIFTING WITH EYE BOLTS**

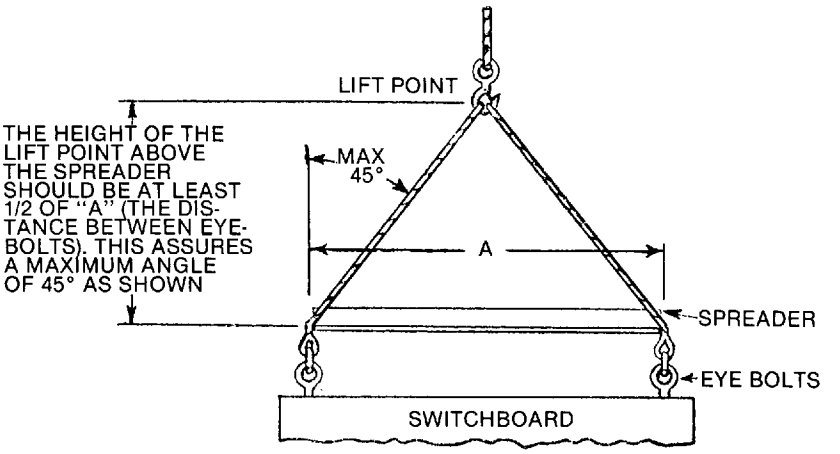


**Fig. 2**
**LIFTING WITH INTEGRAL LIFT ANGLE**

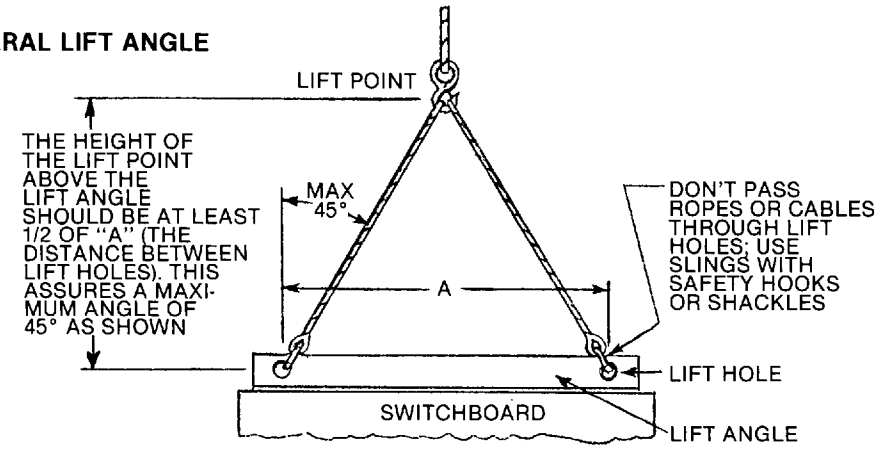


**Fig. 3**
**LIFTING WITH SLING RIGGING**

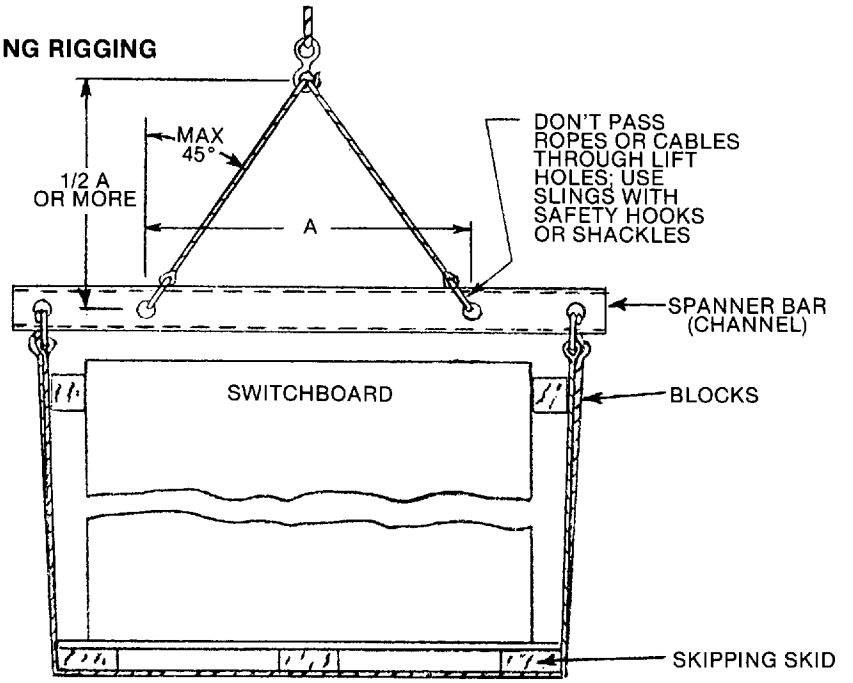




Copyright National Electrical Manufacturers Association
Provided by IHS under license with NEMA
No reproduction or networking permitted without license from IHS
Not for Resale

## Part IV
## INSTALLATION OF SWITCHBOARD OR ENCLOSURE

1. Install the switchboard in a neat and workmanlike manner following the manufacturer's installation instructions, if available.
2. Locate the switchboard in the area shown on the building floor plans. If in a wet location or outside of the building, the switchboard should be enclosed in a rainproof enclosure or equipped to prevent moisture or water from entering and accumulating within the enclosure. Recommended clearances or working spaces are as follows:
   a. Clearance from walls (not rear accessible)—minimum of 1/2 inch for indoor and 6 inches for outdoor or wet locations.
   b. Clearance from front (working space)—minimum of 2-1/2 feet for switchboards without exposed live parts. See par. 110-16 of the *National Electrical Code.**

NOTE—The above space shall not be used for storage and working spaces should have adequate lighting.

3. When channel sills are used, they should be embedded in the concrete floor or grouted on the surface. In either case, they should be installed in an aligned position and be level over their entire length prior to installing the switchboard.
4. Position the switchboard so that the conduit stubs are located in the area specified on the manufacturer's drawing. In the absence of drawings, locate the switchboard over the conduits so as to provide cable bending space and clearances to live parts.
5. Install the switchboard in its final position, progressively leveling each section and bolting the frames together if they are separated. If necessary, secure the switchboard to walls or other supporting surfaces. Do not depend for security on wooden plugs driven into holes in masonry, concrete, plaster, or similar materials.
6. Connect all through and ground bus at shipping breaks, using the splice bus and hardware supplied with the switchboard. Tighten bolted connections in accordance with the manufacturer's torque specifications, if furnished, or the tables or information shown on pages 6 and 7.
7. If a switchboard does not include a ground bus, provide adequate bonding between frames which are joined on the job site.
8. Ground and bond the switchboard as follows:
   a. Switchboard used as service equipment for a grounded system or as a main switchboard for a separately derived system.
      (1) Run a grounding electrode conductor (ground wire) having a size in accordance with par. 250-94(a) of the *National Electrical Code* from the grounding electrode to the switchboard ground bus or ground terminal designated by the manufacturer. See par. 250-91(a) and 250-92(a) of the Code.
      (2) Unless already done at the factory, install the main bonding jumper from the incoming grounded conductor bus (neutral) to the ground bus or at a location designated by the manufacturer. If a jumper is not furnished, select one having a size in accordance with par. 250-79(c) of the Code.
      (3) Steps (1) and (2) must effectively connect together the ground electrode, the switchboard frame, all outgoing equipment grounding conductors, and the grounded (neutral) bus of the system (on the supply side of any disconnecting link).
      (4) Do not connect any grounding conductors to the load side of any neutral disconnecting link or any sensor used for ground fault protection. Do not connect equipment grounding conductors to the neutral.

*NFPA Pub. No. 70, available from National Fire Protection Association, 470 Atlantic Avenue, Boston, MA 02210.



Copyright National Electrical Manufacturers Association
Provided by IHS under license with NEMA
No reproduction or networking permitted without license from IHS
Not for Resale

(5) Where the switchboard or system is dual fed (double-ended) and has ground fault protection, special precautions are necessary to accomplish proper grounding and bonding. Follow the manufacturer's instructions.

b. Switchboard used as service equipment for an ungrounded system or as a main switchboard for separately derived system.
   (1) Run a grounding electrode conductor (ground wire) having a size in accordance with par. 250-94(a) of the *National Electrical Code* from the grounding electrode to the switchboard ground bus or ground terminal designated by the manufacturer. See par. 250-91(a) and 250-92(a) of the Code.
   (2) If the system is grounded at any point ahead of the switchboard, the grounded conductor must be run to the switchboard in accordance with par. 250-23(b) of the *National Electrical Code* and connected to the ground bus or to the switchboard frame and equipment grounding terminal designated by the manufacturer.
   (3) Steps (1) and (2) must effectively connect together the grounding electrode, the switchboard frame, all outgoing equipment grounding conductors, and any grounded conductor which runs to the switchboard as described in item (2).

c. Switchboard *not* used as service equipment or as a main switchboard for a separately derived system, and used on either a grounded or ungrounded system.
   (1) Ground the switchboard frame and any ground bus by means of equipment grounding conductors having a size in accordance with par. 250-95 of the *National Electrical Code* and run with the main supply conductors or by bonding to the raceway enclosing the main supply conductors in accordance with par. 250-91(b) of the Code.

9. Effectively close all unused openings in the switchboard enclosure.
10. In damp indoor locations, shield the switchboard so as to prevent moisture and water from entering and accumulating therein.

## Part V
## INSTALLATION OF CONDUIT AND WIRES

1. Conduits should be installed so as to prevent moisture or water from entering and accumulating within the enclosure. All conduits (including stubs) should be bonded to the switchboard. All conduits should be located in the areas recommended by the manufacturer to avoid cable interference with structural members and live bus.
2. Care should be exercised to make sure that the lugs which have been provided are suitable for use with the cables being installed in the switchboard.
3. Care should be exercised in stripping insulation from the conductors so as not to nick or ring the conductor. For aluminum, clean all oxide from the stripped portion and apply a joint compound. All lugs should be tightened; use the manufacturer's torque values, if furnished.
4. Provision should be made to locate conductors in the switchboard so that they will be free from physical damage and so as to avoid overheating. The conductors should be supported in order to withstand available short-circuit currents. The largest practical bending radii should be maintained so as to avoid damaging the insulation and causing terminals to loosen. Exercise care so that the cable will not interfere with any moving parts.
5. Conductors 1/0 AWG in size and larger may be run in multiple. All multiple conductors should be of the same length and same material to assure the equal division of current. If conductors pass through metal having magnetic properties, all of the circuit conductors, including the neutral, should be run through the same opening.



Copyright National Electrical Manufacturers Association
Provided by IHS under license with NEMA
No reproduction or networking permitted without license from IHS
Not for Resale

6. All incoming and outgoing control connections should be made in accordance with the switchboard manufacturer's schematic and wiring diagrams.

## Part VI
## INSTALLATION OF SWITCHBOARD INTERIOR

Follow these instructions only if the switchboard interior(s) was not mounted at the factory.

1. Exercise care in unpacking the switchboard interior to prevent damage.
2. Check for shipping damage and to make sure that the interior is the correct one for the installation.
3. Store the switchboard interior in a clean dry place and locate it so that it will not be subject to mechanical damage.
4. Clean the switchboard enclosure of all foreign matter prior to the installation of the interior. If parts at connection points are splattered with cement, plaster, paint, or other foreign matter, remove the foreign material with great care to avoid damage to the plating. Such damage may cause overheating and subsequent joint failure. If the plating is damaged while removing foreign material, apply a suitable joint compound using the procedures specified by the switchboard or joint compound manufacturer.
5. Carefully follow the switchboard manufacturer's instructions.
6. Install the correct interior and tighten it securely in the enclosure.
7. Install the section bus connection to the through bus, if needed.

## Part VII
## STEPS TO BE TAKEN BEFORE ENERGIZING

1.a Retighten all accessible connections to the manufacturer's torque specifications, if furnished. If such information is not available, tighten steel hardware parts (except pressure wire connectors and Belleville type [spring] washers) to the values given in the following table:

| Bolt Diameter | Tightening Torque |
|---|---|
| #8 (5/32″) | 15 inch pounds |
| #10 (3/16″) | 20 inch pounds |
| 1/4″ | 7 foot pounds |
| 5/16″ | 12 foot pounds |
| 3/8″ | 20 foot pounds |
| 1/2″ | 50 foot pounds |
| 5/8″ | 95 foot pounds |
| 3/4″ | 155 foot pounds |

1.b Retighten connections using Belleville type (spring) washers until washer is flat.

1.c Retighten the wire clamping members of all accessible mechanical (pressure wire) type connectors to the torque value (inch-pounds) for the largest wire size the connector will accept as given in the following tables, unless otherwise noted on the equipment:



Copyright National Electrical Manufacturers Association
Provided by IHS under license with NEMA
No reproduction or networking permitted without license from IHS
Not for Resale

| Wire Size Installed, AWG or MCM | Torque Values, Inch-pounds | | | |
|---|---|---|---|---|
| | Slotted Head Screwdriver | | | |
| | No. 10 and Larger Screws | | | |
| | Slot Width 3/64 and Less Slot Length 1/4 and Less | Slot Width over 3/64 Slot Length over 1/4 | External Drive Wrench | |
| | | | Split Bolt | Other |
| 14 | 15 | 25 | 65 | 60 |
| 12 | 15 | 25 | 65 | 60 |
| 10 | 15 | 25 | 65 | 60 |
| 8 | 20 | 30 | 65 | 60 |
| 6 | 25 | 35 | 135 | 90 |
| 4 | ... | 35 | 135 | 90 |
| 3 | ... | 40 | 225 | 125 |
| 2 | ... | 40 | 225 | 125 |
| 1 | ... | 40 | 225 | 125 |
| 1/0 | ... | 40 | 315 | 150 |
| 2/0 | ... | 40 | 315 | 150 |
| 3/0 | ... | 40 | 400 | 200 |
| 4/0 | ... | 40 | 400 | 200 |
| 250 | ... | ... | 550 | 250 |
| 300 | ... | ... | 550 | 250 |
| 350 | ... | ... | 550 | 250 |
| 400 | ... | ... | 675 | 250 |
| 500 | ... | ... | 675 | 300 |
| 600 | ... | ... | 800 | 300 |
| 700 | ... | ... | 800 | 300 |
| 750 | ... | ... | 800 | 300 |
| 800 | ... | ... | 900 | 400 |
| 900 | ... | ... | 900 | 400 |
| 1000 | ... | ... | 900 | 400 |
| 1250 | ... | ... | 900 | 500 |
| 1500 | ... | ... | 900 | 500 |
| 1750 | ... | ... | 900 | 500 |
| 2000 | ... | ... | 900 | 500 |

| Hex Socket Screws | |
|---|---|
| Socket Size (Across Flats), Inches | Tightening Torque, Inch-pounds |
| 1/8 | 35 |
| 5/32 | 80 |
| 3/16 | 100 |
| 7/32 | 120 |
| 1/4 | 150 |
| 5/16 | 225 |
| 3/8 | 300 |
| 1/2 | 400 |
| 9/16 | 500 |



Copyright National Electrical Manufacturers Association
Provided by IHS under license with NEMA
No reproduction or networking permitted without license from IHS
Not for Resale

2. Remove all blocks or other temporary holding means used for shipment from all component devices and the switchboard interior.
3. Check the security of all bus mounting means.
4. Check the enclosure to see that it has not been damaged in such a manner as to reduce electrical spacings.
5. Manually exercise all switches, circuit breakers, and other operating mechanisms to make certain that they are properly aligned and operate freely.
6. Conduct an electrical insulation resistance test to make sure that the switchboard is free from short circuits and grounds. This should be done both phase to ground and phase to phase with the switches or circuit breakers both opened and closed.
7. Check any electrical relays, meters, or instrumentation to determine that connections are made properly and that the devices function properly.
8. Electrically exercise all electrically operated switches, circuit breakers, and other mechanisms (but not under load) to determine that the devices operate properly. An auxiliary source of control power may be necessary to provide power to the electrical operators.
9. Test the ground fault protection system (if furnished) in accordance with the manufacturer's instructions.
10. Set the adjustable current and voltage trip mechanisms to the proper values. Experience has indicated that damage from faults can be reduced if the devices used for overload and short-circuit protection are set to operate instantaneously (that is, without intentional time delay) at 115 percent of the highest value of phase current which is likely to occur as the result of any anticipated motor starting or welding currents.
11. Make certain that field wiring is clear of live bus and, where necessary, physically secured to withstand the effects of fault currents.
12. Check to determine that all grounding connections are made properly. If there is no ground bus, make certain that the sections of the switchboard which are shipped separately are connected in such a way as to assure a continuous grounding path.
13. Remove all debris, scrap wire, etc., from the switchboard interior before closing the enclosure.
14. Install covers, close doors, and make certain that no wires are pinched and that all enclosure parts are properly aligned and tightened.

## Part VIII
## ENERGIZING EQUIPMENT

1. Energizing a switchboard for the first time is potentially dangerous. Therefore, qualified electrical personnel should be present when the equipment is energized for the first time. If faults caused by damage or poor installation practices have not been detected in the checkout procedure described in Part VII, serious damage can result when the power is turned on.
2. There should be no load on the switchboard when it is energized. Turn off all of the downstream loads, including those such as panelboards and other devices which are remote from the switchboard.
3. The equipment should be energized in sequence by starting at the source end of the system and working towards the load end. In other words, energize the main devices, then the feeder devices, and then the branch-circuit devices. Turn the devices on with a firm positive motion. Protective devices which are not quick-acting should not be "teased" into the closed position.



Copyright National Electrical Manufacturers Association
Provided by IHS under license with NEMA
No reproduction or networking permitted without license from IHS
Not for Resale

4. After all devices have been closed, loads such as lighting circuits, contactors, heaters, and motors may be turned on.

## Part IX
## CARE AND MAINTENANCE

1. Feel the doors, enclosure sides, and deadfront surfaces over all circuit breakers and switches with the palm of the hand. Any temperature which the palm of the hand cannot stand for about 3 seconds may indicate trouble.

**WARNING**—BEFORE PERFORMING ANY OF THE FOLLOWING OPERATIONS, TURN OFF ALL POWER SUPPLYING THE SWITCHBOARD. CHECK THE VOLTAGE OF ALL INCOMING LINE TERMINALS TO POSITIVELY ASCERTAIN THAT THE EQUIPMENT IS TOTALLY DEENERGIZED.

2. Inspect the switchboard once each year or after any severe electrical fault.
   a. Look for any moisture or signs of previous wetness or dripping inside the switchboard. Condensation in conduits or dripping from outside sources is a common cause of switchboard failure.
      (1) Seal off any conduits which have dripped condensate, and provide an alternate means for the conduit to drain.
      (2) Seal off any cracks or openings which have allowed moisture to enter the enclosure. Eliminate the source of any dripping on the enclosure and any other source of moisture.
      (3) Replace or thoroughly dry and clean any insulating material which is damp or wet or shows an accumulation of deposited material from previous wettings.
   b. If there is appreciable accumulation of dust and dirt, clean out the switchboard by using a brush, vacuum cleaner, or clean lint-free rags. In order to avoid blowing dust into circuit breakers or other equipment, do not use a blower or compressed air.
   c. Carefully inspect all visible electrical joints and terminals in the electrical bus and wiring systems.
      (1) Retighten bolts and nuts at bus joints if there is any sign of overheating or looseness. (See Part VII, item 1.a for tightness recommendations.) If joints appear to be badly discolored, corroded, or pitted, the parts should be disassembled and replaced or cleaned.

**CAUTION**—DO NOT REMOVE PLATING ON ALUMINUM PARTS IN JOINTS. DAMAGED ALUMINUM PARTS SHOULD BE REPLACED.

      (2) Examine all wire or cable connections for evidence of looseness or overheating. Retorque if necessary. (See Part VII, item 1.c.) If major discoloration or cable damage is apparent, replace the damaged parts and remove the damaged portion of the cable.
      (3) Closely examine fuse clips. If there is any sign of overheating or looseness, check the spring pressure, tightness of clamps, etc. Replace the fuse clips if the spring pressure compares unfavorably with that of other identical fuse clips in the switchboard.
      (4) Look for any signs of deterioration in insulating material or melting of the sealing compound. Replace such insulating parts, and assemblies where sealing compound has melted.
      (5) BE SURE THAT THE CONDITION WHICH CAUSED THE OVERHEATING HAS BEEN CORRECTED.



Copyright National Electrical Manufacturers Association
Provided by IHS under license with NEMA
No reproduction or networking permitted without license from IHS
Not for Resale

d. Check the operation of all mechanical components.
   (1) Check all switch operator mechanisms and external operators of circuit breakers. Make sure each operator mechanism quickly and positively throws contacts fully on and fully off.
   (2) Check the mechanisms of all electrical and mechanical interlocks and padlocking means.
   (3) Check all devices for missing or broken parts, proper spring tension, free movement, rusting or corrosion, dirt, and excessive wear.

e. Examine all readily accessible arc chutes and insulating parts for cracks or breakage and for arc spatter, sooty deposits, oil, or tracking.
   (1) Clean off arc spatter, oil, and sooty deposits, but replace parts if appreciable material has burned away or if material is charred or tracked.
   (2) Replace insulating parts and arc chutes that are cracked or broken.

3. Clean and dress readily accessible *copper* electrical contacts, blades and jaws when inspection indicates the need to do so. Avoid removing metal from silver contact surfaces.
   a. Dress sliding contacts by removing projecting burrs or arc transferred material which interferes with free movement.
   b. Clean contact surfaces to remove black oxides. Use fine aluminum oxide paper and remove as little material as possible. Keep metal and abrasive particles entirely out of the switchboard.
   c. Replace blades or jaws which are burned away enough to appreciably change their shape or to interfere with the tapered edges, etc., which allow them to act freely.
   d. Where contacts show signs of overheating, compare spring pressures and stiffness of parts with those of identical good contacts. Replace springs, jaws, blades, or contacts if they have been softened or otherwise damaged by heat.

4. Lubricate the operating parts of switch mechanisms, etc., according to the manufacturer's instructions.
   a. Use clean, nonmetallic, light grease or oil as instructed.
   b. Do *not* oil or grease parts of molded case circuit breakers.
   c. If no instructions are given on the devices, sliding copper contacts, operating mechanisms, and interlocks may be lubricated with clean, light grease.
   d. Wipe off excess lubrication to avoid catching dirt.

5. Operate each switch or circuit breaker several times to make sure that all mechanisms are free and in proper working order.

6. Check fuses to make sure they have the proper ampere rating and interrupting rating. Make sure that noncurrent-limiting fuses are never used as replacements for current-limiting fuses. Never attempt to defeat rejection mechanisms which are provided to prevent the installation of the wrong type of fuses.

7. Check insulation resistance:
   a. If a severe electrical fault has occured.
   b. If it has been necessary to replace parts or clean insulating surfaces.
   c. If the switchboard has been exposed to high humidity, condensation or dripping moisture.

## Part X
## PERMISSIBLE LOADING OF SWITCHBOARDS

1. For switchboards without main overcurrent protective devices (lug mains switchboard), the total continuous load current through the supply bus should not exceed current rating of the switchboard.



Copyright National Electrical Manufacturers Association
Provided by IHS under license with NEMA
No reproduction or networking permitted without license from IHS
Not for Resale

2. For switchboards with a single main overcurrent protective device, the total continuous load current on the protective device should not exceed 80 percent of its ampere rating unless the device is rated to carry 100 percent of its ampere rating.
3. For switchboards with multiple main overcurrent protective devices, the total continuous current through the supply bus should not exceed current rating of the switchboard.

   The total continuous load current on a main overcurrent protective device should not exceed 80 percent of its ampere rating unless the device is rated to carry 100 percent of its ampere rating.
4. For a branch-circuit overcurrent protective device in a switchboard, the total continuous load current on the protective device should not exceed 80 percent of its ampere rating unless the device is rated to carry 100 percent of its ampere rating.



Copyright National Electrical Manufacturers Association
Provided by IHS under license with NEMA
No reproduction or networking permitted without license from IHS
Not for Resale

9009279 0004038 4T6

# NEMA STANDARDIZATION

The purpose of NEMA Standards, their classification and status are set forth in certain clauses of the NEMA Bylaws, which are quoted below:

## Purpose of Standards

National Electrical Manufacturers Association Standards are adopted in the public interest and are designed to eliminate misunderstandings between the manufacturer and the purchaser and to assist the purchaser in selecting and obtaining the proper product for its particular need. Existence of a National Electrical Manufacturers Association Standard does not in any respect preclude any member or nonmember from manufacturing or selling products not conforming to the standard.

*(Bylaw—Art. V, Sec. 1)*

## Definition of a Standard

A standard of the National Electrical Manufacturers Association defines a product, process or procedure with reference to one or more of the following: nomenclature, composition, construction, dimensions, tolerances, safety, operating characteristics, performance, rating, testing, and the service for which they are designed.

*(Bylaw—Art. V, Sec. 2, Subsection A)*

## Dimensions

Where dimensions are given for interchangeability purposes, alternate dimensions satisfying the other provisions of the standards publication may be capable of otherwise equivalent performance.

*(NEMA Policy Memorandum 84-2, dated June 7, 1984)*

## Classes of Standards

National Electrical Manufacturers Association Standards are of two classes:

1. NEMA Standard, which relates to a product commercially standardized and subject to repetitive manufacture, which standard has been approved by at least 90 percent of the members of the Subdivision eligible to vote thereon;
2. Suggested Standard for Future Design, which may not have been regularly applied to a commercial product, but which suggests a sound engineering approach to future development, which standard has been approved by at least two-thirds of the members of the Subdivision eligible to vote thereon.

*(Bylaw—Art. V, Sec. 2, Subsection B)*

## Authorized Engineering Information

Authorized Engineering Information consists of explanatory data and other engineering information of an informative character not falling within the classification of NEMA Standard or Suggested Standard for Future Design.

*(Bylaw—Art. V, Sec. 6, 1st Sentence)*

## Official Standards Proposal

An Official Standards Proposal is an official draft of a proposed standard which is formally recommended to an outside organization(s) for consideration, comment and/or approval.

*(Bylaw—Art. V, Sec. 4, Subsection A)*

## Identification of Status

Standards in NEMA Standards Publications are identified in the foreword or following each standard as "NEMA Standard" or "Suggested Standard for Future Design." These indicate the status of the standard. These words are followed by a date which indicates when the standard was adopted in its present form by the Association.

The material identified as "Authorized Engineering Information" and "Official Standards Proposal" is designated similarly.

Copyright National Electrical Manufacturers Association
Provided by IHS under license with NEMA
No reproduction or networking permitted without license from IHS
Not for Resale