PB 2.1-86 ■ 9009279 0004039 332 ■

NEMA STANDARDS PUBLICATION PB 2.1-1986

GENERAL INSTRUCTIONS FOR PROPER HANDLING, INSTALLATION, OPERATION AND MAINTENANCE OF DEADFRONT DISTRIBUTION SWITCHBOARDS RATED 600 VOLTS OR LESS

RETAIN FOR USE OF QUALIFIED MAINTENANCE PERSONNEL

NATIONAL ELECTRICAL MANUFACTURERS ASSOCIATION ■ 2101 L STREET N.W., WASHINGTON, D.C. 20037

Copyright National Electrical Manufacturers Association
Provided by IHS under license with NEMA
No reproduction or networking permitted without license from IHS
Not for Resale

TABLE OF CONTENTS

PAGE

FOREWORD i

SCOPE ii

SECTION 1 GENERAL 1

SECTION 2 HANDLING 1

SECTION 3 STORAGE 2

SECTION 4 INSTALLATION OF SWITCHBOARD OR ENCLOSURE 4

SECTION 5 INSTALLATION OF CONDUIT AND WIRES 5

SECTION 6 INSTALLATION OF SWITCHBOARD INTERIOR 6

SECTION 7 STEPS TO BE TAKEN BEFORE ENERGIZING 7

SECTION 8 ENERGIZING EQUIPMENT 8

SECTION 9 CARE AND MAINTENANCE 8

SECTION 10 PERMISSIBLE LOADING OF SWITCHBOARDS 10

© 1986 by National Electrical Manufacturers Association

Copyright National Electrical Manufacturers Association
Provided by IHS under license with NEMA
No reproduction or networking permitted without license from IHS

Not for Resale

GENERAL INSTRUCTIONS FOR PROPER HANDLING, INSTALLATION, OPERATION, AND MAINTENANCE OF DEADFRONT DISTRIBUTION SWITCHBOARDS RATED 600 VOLTS OR LESS

(Approved as Authorized Engineering Information 5-19-1986)

FOREWORD

This publication is a guide of practical information containing instructions for the proper handling, installation, operation, and maintenance of deadfront distribution switchboards rated 600 volts or less.

These instructions do not purport to cover all details or variations in equipment, nor to provide for every possible contingency regarding installation, operation, or maintenance.

It is recommended that work described in this set of instructions be performed only by qualified persons familiar with the construction and operation of switchboards and that such work be performed only after reading this complete set of instructions.

Should further information be desired or should particular problems arise which are not covered sufficiently, the matter should be referred to the manufacturer.

These recommendations of the Panelboard and Distribution Board Section of the National Electrical Manufacturers Association will be found useful by architects, electrical engineers, electrical contractors, electricians, maintenance engineers, and others. They will be reviewed periodically by the Section for the purpose of updating them to reflect advancing technology. Please address any comments or questions you may have on the text to:

Manager, Engineering Department
National Electrical Manufacturers Association
2101 L Street, N.W.
Washington, D.C. 20037

Publication No. PB 2.1-1986 revises and supersedes PB 2.1-1979.

Copyright National Electrical Manufacturers Association
Provided by IHS under license with NEMA
No reproduction or networking permitted without license from IHS
Not for Resale

SCOPE

This Standards Publication provides information concerning floor-mounted deadfront switchboards rated 6000 amperes or less, 600 volts or less, and consisting of an enclosure, circuit breakers (molded case and low-voltage power), fusible or non-fusible switches, instruments, and metering or control equipment, with associated interconnections and supporting structures.

Copyright National Electrical Manufacturers Association
Provided by IHS under license with NEMA
No reproduction or networking permitted without license from IHS
Not for Resale

Section 1

GENERAL

The successful operation of switchboards is dependent upon proper handling, installation, operation, and maintenance. Neglecting fundamental installation and maintenance requirements may lead to personal injury as well as damage to electrical equipment or other property.

Therefore, installation, operation, and maintenance of switchboards should be conducted only by qualified personnel.

For purposes of these guidelines, a qualified person is one who is familiar with the installation, construction, and operation of the equipment and the hazards involved. In addition, the person is:

(a) Trained and authorized to test, energize, clear, ground, tag, and lockout circuits and equipment in accordance with established safety practices.

(b) Trained in the proper care and use of protective equipment such as rubber gloves, hard hat, safety glasses or face shields, flash resistant clothing, in accordance with established safety practices.

(c) Trained in rendering first aid.

WARNING—THERE IS A HAZARD OF ELECTRIC SHOCK OR BURN WHENEVER WORKING IN OR AROUND ELECTRICAL EQUIPMENT. TURN OFF POWER SUPPLYING THIS EQUIPMENT BEFORE WORKING INSIDE SWITCHBOARDS.

Section 2

HANDLING

These guidelines are provided to help avoid personal injury and equipment damage during handling, as well as to facilitate moving the switchboard at the job site.

1. Follow the manufacturer's handling instructions for the specific equipment, if available.

2. Handle the switchboard with care to avoid damage to components and to the frame or its finish.

3. Keep the switchboard in an upright position unless otherwise indicated by the manufacturer.

4. Know the capabilities of the moving means available to handle the weight of the switchboard.

5. When the switchboard is received, unpack it sufficiently to inspect it for concealed damage and to determine that the shipment is complete and correct.

6. If the switchboard is to be stored for any length of time prior to installation, restore the packing for protection during that period. Where conditions permit, leave the packing intact until the switchboard or sections are at their final installation position. If the packing is removed, cover the top and openings of the equipment during the construction period to protect them against dust and debris. (See Section 3.)

7. The switchboard should remain secured to the shipping skid to prevent distortion of the bottom of the frame during moving.

8. Rod or pipe rollers, with the aid of pinch bars, provide a simple method of moving the switchboard on one floor level if there is little or no incline. Steady the load to prevent tipping.

Copyright National Electrical Manufacturers Association
Provided by IHS under license with NEMA
No reproduction or networking permitted without license from IHS
Not for Resale

9. A forklift truck may offer a more convenient method of handling the switchboard and has the added advantage of permitting it to be hoisted between levels. Balance the load carefully and use a safety strap when handling or moving switchboards with a forklift.

10. When it is necessary to move the switchboard between elevations without a suitable platform elevator, overhead hoisting may be required. Lifting plates and eye bolts (Fig.2-1), or channels, angles, or bars with lift holes (Fig. 2-2) may be provided as a permanent or removable part of the switchboard. If they are not, cable, chain or band slings (Fig. 2-3) may be rigged around the switchboard.

    a. Use rigid spreaders (Fig. 2-1) or spanner bars (Fig. 2-3) to provide the vertical lift on eye bolts and lifting slings to avoid crushing or otherwise damaging the frame or its finish. Lifting bars on long lineups may require additional spreaders to reduce the horizontal compressive load.

    b. Select or adjust the rigging lengths to compensate for any unequal weight distribution of load and to maintain the switchboard in an upright position.

    c. Do not allow the angle between the lifting cables and vertical to exceed 45 degrees in order to reduce the tension on the rigging and the compressive load on the lifting or spanner bars and spreaders.

    d. Do not pass ropes or cables through the lift holes in bars, angles, or channels. Use slings with safety hooks or shackles.

    e. The switchboard may contain a heavy transformer with overhead lifting means. Consult the manufacturer regarding the removal of the switchboard top covers and the utilization of such internal lifting means.

Section 3

STORAGE

1. An indoor switchboard which is not installed and energized immediately should be stored in a clean dry space having a uniform temperature to prevent condensation. Preferably, it should be stored in a heated building having adequate air circulation and protected from dirt and water.

2. An indoor switchboard that must be stored outdoors or in unheated buildings should be properly covered to ensure adequate protection from weather and dirt. Temporary electrical heating should be installed to prevent condensation; approximately 250 watts per section is adequate for the average switchboard size and environment. All loose packing or flammable materials inside the switchboard should be removed before energizing space heaters.

3. An unenergized outdoor switchboard should be kept dry internally by installing temporary heating (see item 2) or by energizing self-contained space heaters.

Copyright National Electrical Manufacturers Association
Provided by IHS under license with NEMA
No reproduction or networking permitted without license from IHS
Not for Resale

Figure 2-1
LIFTING WITH EYE BOLTS

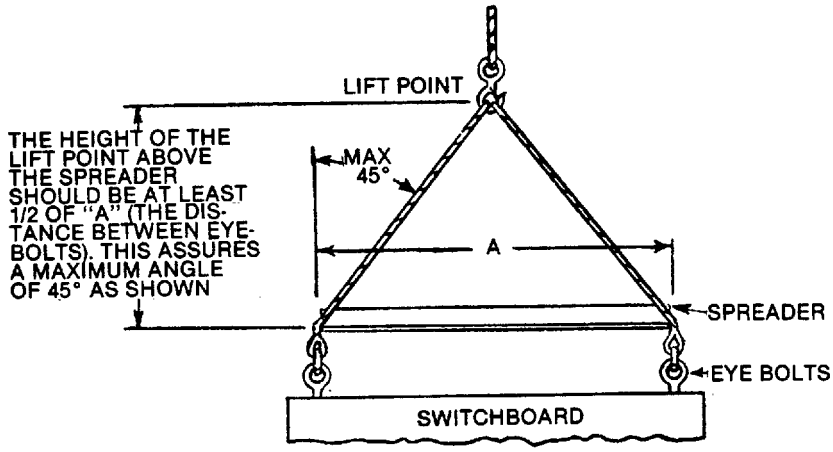

Figure 2-2
LIFTING WITH INTEGRAL LIFT ANGLE

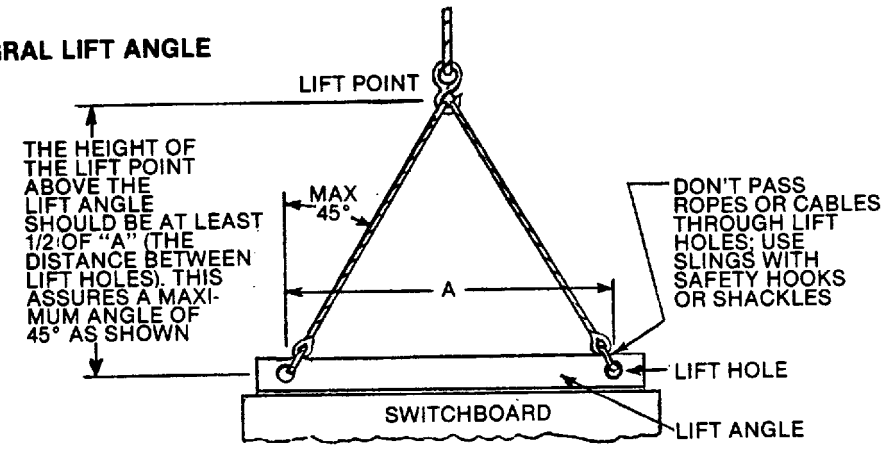

Figure 2-3
LIFTING WITH SLING RIGGING

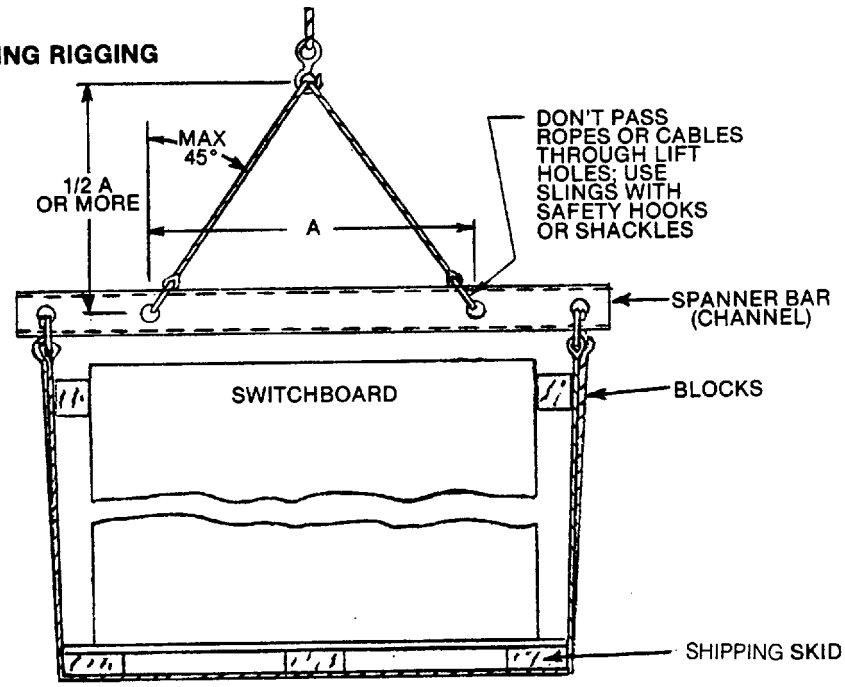

Copyright National Electrical Manufacturers Association
Provided by IHS under license with NEMA
No reproduction or networking permitted without license from IHS
Not for Resale

Section 4

INSTALLATION OF SWITCHBOARD OR ENCLOSURE

Install the switchboard in a neat and workmanlike manner following the manufacturer's installation instructions, if available.

1. *Location.* Locate the switchboard in the area indicated on the building floor plans. If in a wet location or outside of the building, the switchboard should be enclosed in an outdoor enclosure or equipped to prevent moisture or water from entering and accumulating within the enclosure. Recommended clearances or working spaces are as follows:

   a. Clearance from walls (not rear accessible)—minimum of 1/2 inch for indoor and 6 inches for outdoor or wet locations.

   b. Working clearance from front-minimum of three feet. Clearances vary substantially depending on specific application. See Section 110-16 of the 1984 National Electrical Code.*

NOTE: Working clearances and clearances from walls should not be used for storage. Working spaces should have adequate lighting.

2. *Channel Sills.* When channel sills are used, they should be embedded in the concrete floor or grouted on the surface. In either case, they should be installed in an aligned position and be level over the entire length prior to installing the switchboard.

3. *Conduits.* Position the switchboard so that the conduit stubs or floor openings are located in the area specified on the manufacturer's drawing. In the absence of drawings, locate the switchboard over the conduits or floor openings so as to provide cable bending space and clearances to live parts or other obstructions. See Section 384-10 of the National Electrical Code.

4. *Leveling and Securing.* Install the switchboard in its final position, progressively leveling each section and bolting the frames together if they are separated. If necessary, secure the switchboard to walls or other supporting surfaces. Do not depend for security on wooden plugs driven into holes in masonry, concrete, plaster, or similar materials.

5. *Splice Bus.* Connect all through and ground bus at shipping breaks, using the splice bus and hardware supplied with the switchboard. Tighten bolted connections in accordance with the manufacturer's torque specifications. If not furnished, consult the manufacturer.

6. *Grounding and Bonding.* Ground and bond the switchboard as follows:

   a. Switchboard used as service equipment for a grounded system or as a main switchboard for a separately derived system.

      (1) Run a grounding electrode conductor (ground wire) having a size in accordance with Sections 250-93 or 250-94 of the National Electrical Code from the ground electrode to the switchboard ground bus or ground terminal designated by the manufacturer. See Sections 250-91(a) and 250-92(a) of the National Electrical Code.

      (2) Unless already done at the factory, install the main bonding jumper from the incoming grounded conductor bus (neutral) to the ground bus or at a location designated by the manufacturer. If a jumper is not furnished, select one having a size in accordance with Section 250-79(c) of the National Electrical Code.

*NFPA Pub. No. 70-1984, available from National Fire Protection Association, Batterymarch Park, Quincy, Mass. 02269

Copyright National Electrical Manufacturers Association
Provided by IHS under license with NEMA
No reproduction or networking permitted without license from IHS
Not for Resale

(3) Steps (1) and (2) must effectively connect together the ground electrode, the switchboard frame, all outgoing equipment grounding conductors, and the grounded (neutral) bus of the system (on the supply side of any neutral link).

(4) Do not connect any grounding conductors to the load side of any neutral disconnecting link or any sensor used for ground fault protection. Do not connect equipment grounding conductors to the neutral.

(5) Where the switchboard or system is dual fed (double-ended) and has ground fault protection, special precautions are necessary to accomplish proper grounding and bonding. Follow the manufacturer's instructions.

b. Switchboard used as service equipment for an ungrounded system or as a main switchboard for separately derived system.

(1) Run a grounding electrode conductor (ground wire) having a size in accordance with Sections 250-93 or 250-94 of the National Electrical Code from the grounding electrode to the switchboard ground bus or ground terminal designated by the manufacturer. See Sections 250-91(a) and 250-92(a) of the National Electrical Code.

(2) If the system is grounded at any point ahead of the switchboard, the grounded conductor should be run to the switchboard in accordance with Section 250-23(b) of the National Electrical Code and connected to the ground bus or to the switchboard frame and equipment grounding terminal designated by the manufacturer.

(3) Steps (1) and (2) must effectively connect together the grounding electrode, the switchboard frame, all outgoing equipment grounding conductors, and any grounded conductor which runs to the switchboard as described in item (2).

c. Switchboard not used as service equipment or as a main switchboard for a separately derived system, and used on either a grounded or ungrounded system.

(1) Ground the switchboard frame and any ground bus by means of equipment grounding conductors having a size in accordance with Section 250-95 of the National Electrical Code and run with the main supply conductors or by bonding to the raceway enclosing the main supply conductors in accordance with Sections 250-91 (b) and 250-92(b) of the National Electrical Code.

7. *Unused Openings.* Effectively close all unused openings in the switchboard enclosure.

8. *Damp Indoor Locations.* In damp indoor locations, shield the switchboard so as to prevent moisture and water from entering and accumulating therein.

9. *Unusual Service Conditions.* Unless the switchboard has been designed for unusual service conditions, it should not be located where it will be exposed to ambient temperatures above 40°C (104°F), high humidity, corrosive or explosive fumes, dust, vapors, dripping or standing water, abnormal vibration, mechanical shock, tilting, or other unusual operating conditions.

Section 5

INSTALLATION OF CONDUIT AND WIRES

1. Conduits should be installed to prevent moisture or water from entering and accumulating within the enclosure. All conduits (including stubs) should be bonded to the switchboard. All conduits should be located in the areas recommended by the manufacturer to avoid cable interference with structural members and live bus. Before pulling any cables into the switchboard, verify that their size, temperature rating, and conductor insulation comply with the switchboard markings.

Copyright National Electrical Manufacturers Association
Provided by IHS under license with NEMA
No reproduction or networking permitted without license from IHS
Not for Resale

2. Care should be exercised to ensure that the lugs which have been provided are suitable for use with the types of cables being installed in the switchboard.

3. If compression (crimp) lugs are used, crimp with the tool(s) recommended by the lug manufacturer.

4. Care should be exercised in stripping insulation from the conductors so as not to nick or ring the conductor. For aluminum, clean all oxide from the stripped portion and apply an oxide inhibiting joint compound. All mechanical lugs should be tightened; use the manufacturer's torque specifications. If not furnished, consult the manufacturer.

5. Power cables should enter the switchboard in the section in which they are to be terminated. See Section 384-3 of the National Electrical Code.

6. Provision should be made to locate conductors in the switchboard so that they will be free from physical damage and to avoid overheating. If required by the manufacturer's instructions, the conductors should be secured in order to withstand short-circuit forces. The largest practical bending radii should be maintained to avoid damaging the insulation and causing terminals to loosen. Exercise care so that the cable will not interfere with any moving parts.

7. Conductors 1/0 AWG in size and larger may be run in parallel. All parallel conductors should be of the same size, length, and material to assure the equal division of current. See Section 310-4 of the National Electrical Code. If conductors pass through metal having magnetic properties, all of the circuit conductors, including the neutral, should be run through the same opening.

8. All incoming and outgoing control connections should be made in accordance with the switchboard manufacturer's schematic and wiring diagrams.

9. Installation of cables should be done in temperatures above freezing to prevent cable insulation from cracking or splitting due to cold, unless the cable is suitable for installation at temperatures below freezing.

Section 6

INSTALLATION OF SWITCHBOARD INTERIOR

Follow these instructions only if the switchboard interior(s) was not mounted at the factory.

1. *Unpacking.* Exercise care in unpacking the switchboard interior to prevent damage.

2. *Shipping Damage.* Check for shipping damage and to make sure that the interior is the correct one for the installation.

3. *Storage.* Store the switchboard interior in a clean dry place and locate it so that it will not be subject to mechanical damage.

WARNING: BE SURE THAT ALL POWER IS TURNED OFF AND REMAINS OFF DURING THE INSTALLATION PROCEDURES.

4. *Cleaning.* Clean the switchboard enclosure of all foreign material prior to the installation of the interior. If parts at connection points are splattered with cement, plaster, paint, or other foreign material, remove the foreign material with great care to avoid damage to the plating. Such damage may cause overheating and subsequent joint failure. If the plating is damaged while removing foreign material, apply a suitable joint compound using the procedures specified by the switchboard or joint compound manufacturer.

5. *Manufacturer's Instructions.* Carefully follow the switchboard manufacturer's instructions.

6. *Interior Installation.* Install the correct interior and tighten it securely in the enclosure. Install the section bus connection to the through bus, if needed.

Copyright National Electrical Manufacturers Association
Provided by IHS under license with NEMA
No reproduction or networking permitted without license from IHS
Not for Resale

9009279 0004049 281

Section 7

STEPS TO BE TAKEN BEFORE ENERGIZING

1. Tighten all accessible electrical connections to the manufacturer's torque specifications. If such information is not provided with the equipment, consult the manufacturer.

2. Remove all blocks or other temporary holding means used for shipment from all component devices and the switchboard interior.

3. Check the integrity of all bus mounting means.

4. Check the enclosure to see that it has not been damaged in such a manner as to reduce electrical spacings.

5. Manually exercise all switches, circuit breakers, and other operating mechanisms to make certain that they are properly aligned and operate freely.

6. Conduct an electrical insulation resistance test to ensure that the switchboard is free from short circuits and grounds. With the neutral isolated from ground and the switches and circuit breakers open, conduct electrical insulation resistance tests from phase to phase, phase to ground, phase to neutral, and neutral to ground.

7. Check any electrical relays, meters, or instrumentation to determine that connections are made properly and that the devices function properly.

8. With loads disconnected, electrically exercise all electrically operated switches, circuit breakers, and other mechanisms to determine that the devices operate properly. An auxiliary source of control power may be necessary to provide power to the electrical operators.

9. Test the ground fault protection system (if furnished) in accordance with the manufacturer's instructions. See Section 230-95 of the National Electrical Code and NEMA Standards Publication PB 2.2-1983, Application Guide for Ground Fault Protective Devices for Equipment.

10. Set the adjustable current and voltage trip mechanisms to the proper values. Experience has indicated that damage from overcurrent can be reduced if the devices used for overload and short-circuit protection are set to operate instantaneously (that is, without intentional time delay) at 115 percent of the highest value of phase current which is likely to occur as the result of any anticipated motor starting or welding currents.

11. Make certain that field wiring is clear of live bus and, when specified by the manufacturer, physically secured to withstand the effects of short circuits.

12. Check to determine that all grounding connections are made properly. If there is no ground bus, make certain that the sections of the switchboard which are shipped separately are connected in such a way as to ensure a continuous grounding path.

13. Remove all debris, scrap wire, etc., from the switchboard interior before closing the enclosure.

14. Install covers, close doors, and make certain that no wires are pinched and that all enclosure parts are properly aligned and tightened.

Copyright National Electrical Manufacturers Association
Provided by IHS under license with NEMA
No reproduction or networking permitted without license from IHS
Not for Resale

Section 8

ENERGIZING EQUIPMENT

1. Energizing a switchboard for the first time after initial installation or maintenance is potentially dangerous. Therefore, qualified electrical personnel should be present when the equipment is energized for the first time. If short circuits caused by damage or poor installation practices have not been detected in the checkout procedure described in Section 7, serious damage can result when the power is turned on.

2. There should be no load on the switchboard when it is energized. Turn off all the downstream loads, including those such as panelboards and other devices which are remote from the switchboard.

3. The equipment should be energized in sequence by starting at the source end of the system and working towards the load end. In other words, energize the main devices, then the feeder devices, and then the branch circuit devices. Turn the devices on with a firm positive motion. Protective devices which are not quick-acting should not be "teased" into the closed position.

4. After all main, feeder, and branch circuit devices have been closed, loads such as lighting circuits, contactors, heaters, and motors may be turned on.

Section 9

CARE AND MAINTENANCE

A care and maintenance program for switchboards should be conducted on a regularly scheduled basis in accordance with the following:

1. A switchboard which has been carrying its regular load for at least 3 hours just prior to inspection should be field tested by feeling the deadfront surfaces of circuit breakers, switches, interior trims, doors, and enclosure sides with the palm of the hand. If the temperature of these surfaces does not permit you to maintain contact for at least 3 seconds, this may be an indication of trouble and investigation is necessary.

WARNING: BEFORE PERFORMING ANY OF THE FOLLOWING OPERATIONS, TURN OFF ALL POWER SUPPLYING THE SWITCHBOARD. CHECK THE VOLTAGE OF ALL INCOMING LINE TERMINALS TO POSITIVELY ASCERTAIN THAT THE EQUIPMENT IS TOTALLY DEENERGIZED.

2. Inspect the switchboard once each year or after any severe short circuit.

   a. Look for any moisture or signs of previous wetness or dripping inside the switchboard. Condensation in conduits or dripping from outside sources is one known cause of switchboard malfunction.

      (1) Seal off any conduits which have dripped condensate, and provide a means for further condensate to drain away from the switchboard.

      (2) Seal off any cracks or openings which have allowed moisture to enter the enclosure. Eliminate the source of any dripping on the enclosure and any other source of moisture.

      (3) Replace or thoroughly dry and clean any insulating material which is damp or wet, or shows an accumulation of deposited material from previous wettings.

Copyright National Electrical Manufacturers Association
Provided by IHS under license with NEMA
No reproduction or networking permitted without license from IHS
Not for Resale

b. If there is an accumulation of dust and dirt, clean out the switchboard by using a brush, vacuum cleaner, or clean lint-free rags. Avoid blowing dust into circuit breakers or other components. Do not use a blower or compressed air.

c. Carefully inspect all visible electrical joints and terminals in the bus and wiring systems.

(1) Tighten bolts and nuts at bus joints if there is any sign of overheating or looseness. (See Section 7, item 1a. for tightness recommendations.) If joints appear to be badly discolored, corroded, or pitted, the parts should be disassembled and replaced or cleaned.

CAUTION: DO NOT REMOVE PLATING ON ALUMINUM PARTS IN JOINTS. REPLACE DAMAGED ALUMINUM PARTS.

(2) Examine all wire or cable connections for evidence of looseness or overheating. Tighten if necessary. (See Section 7, item 1.) If major discoloration or cable damage is apparent, replace the damaged parts and remove the damaged portion of the cable.

(3) Closely examine fuse clips. If there is any sign of overheating or looseness, check the spring pressure, tightness of clamps, etc. Replace the fuse clips if the spring pressure compares unfavorably with that of other identical fuse clips in the switchboard.

(4) Look for any signs of deterioration in insulating material or melting of the sealing compound. Replace such insulating parts and assemblies where sealing compound has melted.

(5) BE SURE THAT THE CONDITION WHICH CAUSED THE OVERHEATING HAS BEEN CORRECTED.

d. Check the operation of all mechanical components.

(1) Check all switch operator mechanisms and external operators of circuit breakers. Make sure each operator mechanism quickly and positively throws the contacts fully on and off.

(2) Check the mechanisms of all electrical and mechanical interlocks and padlocking means.

(3) Whenever practical check all devices for missing or broken parts, spring tension, free movement, corrosion, dirt, and excessive wear.

(4) Adjust, clean, and lubricate or replace parts as required.

e. After a severe short circuit, examine all devices for cracks and breakage and replace or repair components as required. See manufacturer's instructions.

3. Clean and dress readily accessible copper electrical contacts, blades, and jaws according to the manufacturer's instructions when inspection indicates the need.

4. Lubricate the operating parts of switch mechanisms, etc., according to the manufacturer's instructions.

a. Use clean, nonmetallic, light grease or oil as instructed.

b. Do not oil or grease parts of molded case circuit breakers.

c. If no instructions are given on the devices, sliding copper contacts, operating mechanisms, and interlocks may be lubricated with clean, light grease.

d. Wipe off excess lubrication to avoid catching dirt.

5. Operate each switch or circuit breaker several times to make sure that all mechanisms are free and in proper working order. Replace as required.

Copyright National Electrical Manufacturers Association
Provided by IHS under license with NEMA
No reproduction or networking permitted without license from IHS
Not for Resale

6. Check fuses to ensure they have the proper ampere and interrupting ratings. Ensure that noncurrent-limiting fuses are never used as replacements for current-limiting fuses. Never attempt to defeat rejection mechanisms which are provided to prevent the installation of the incorrect class of fuses.

7. Check insulation resistance:

   a. If a severe short circuit has occurred.

   b. If it has been necessary to replace parts or clean insulating surfaces.

   c. If the switchboard has been exposed to high humidity, condensation or dripping moisture.

8. If a severe electrical short circuit has occurred, the excessive currents may have resulted in structural component and/or bus and conductor damage due to mechanical distortion, thermal damage, metal deposits, or smoke. The manufacturer should be consulted before clean up and correction is attempted.

Section 10

PERMISSIBLE LOADING OF SWITCHBOARDS

1. For switchboards without main overcurrent protective devices (lug mains switchboard), the total continuous load current through the supply bus should not exceed the current rating of the switchboard.

2. For switchboards with a single main overcurrent protective device, the total continuous load current on the protective device should not exceed 80 percent of its ampere rating unless the device is rated to carry 100 percent of its ampere rating.

3. For switchboards with multiple main overcurrent protective devices, the total continuous current through the supply bus should not exceed the current rating of the switchboard. The total continuous load current on each main overcurrent protective device should not exceed 80 percent of its ampere rating unless the device is rated to carry 100 percent of its ampere rating.

4. For feeder and branch circuit overcurrent protective devices in switchboards, the total continuous load current on the overcurrent protective device should not exceed 80 percent of its ampere rating unless the device is rated to carry 100 percent of its ampere rating.

Copyright National Electrical Manufacturers Association
Provided by IHS under license with NEMA
No reproduction or networking permitted without license from IHS
Not for Resale

September 1984

NEMA STANDARDIZATION

The purpose of NEMA Standards, their classification and status are set forth in certain clauses of the NEMA Bylaws, which are quoted below:

Purpose of Standards

National Electrical Manufacturers Association Standards are adopted in the public interest and are designed to eliminate misunderstandings between the manufacturer and the purchaser and to assist the purchaser in selecting and obtaining the proper product for its particular need. Existence of a National Electrical Manufacturers Association Standard does not in any respect preclude any member or nonmember from manufacturing or selling products not conforming to the standard.

(Bylaw—Art. V, Sec. 1)

Definition of a Standard

A standard of the National Electrical Manufacturers Association defines a product, process or procedure with reference to one or more of the following: nomenclature, composition, construction, dimensions, tolerances, safety, operating characteristics, performance, rating, testing, and the service for which they are designed.

(Bylaw—Art. V, Sec. 2, Subsection A)

Dimensions

Where dimensions are given for interchangeability purposes, alternate dimensions satisfying the other provisions of the standards publication may be capable of otherwise equivalent performance.

(NEMA Policy Memorandum 84-2, dated June 7, 1984)

Classes of Standards

National Electrical Manufacturers Association Standards are of two classes:

1. NEMA Standard, which relates to a product commercially standardized and subject to repetitive manufacture, which standard has been approved by at least 90 percent of the members of the Subdivision eligible to vote thereon;
2. Suggested Standard for Future Design, which may not have been regularly applied to a commercial product, but which suggests a sound engineering approach to future development, which standard has been approved by at least two-thirds of the members of the Subdivision eligible to vote thereon.

(Bylaw—Art. V, Sec. 2, Subsection B)

Authorized Engineering Information

Authorized Engineering Information consists of explanatory data and other engineering information of an informative character not falling within the classification of NEMA Standard or Suggested Standard for Future Design.

(Bylaw—Art. V, Sec. 6, 1st Sentence)

Official Standards Proposal

An Official Standards Proposal is an official draft of a proposed standard which is formally recommended to an outside organization(s) for consideration, comment and/or approval.

(Bylaw—Art. V, Sec. 4, Subsection A)

Identification of Status

Standards in NEMA Standards Publications are identified in the foreword or following each standard as "NEMA Standard" or "Suggested Standard for Future Design." These indicate the status of the standard. These words are followed by a date which indicates when the standard was adopted in its present form by the Association.

The material identified as "Authorized Engineering Information" and "Official Standards Proposal" is designated similarly.

Copyright National Electrical Manufacturers Association
Provided by IHS under license with NEMA
No reproduction or networking permitted without license from IHS
Not for Resale

9009279 0004054 649

PANELBOARD AND DISTRIBUTION BOARD SECTION

OF THE

NATIONAL ELECTRICAL MANUFACTURERS ASSOCIATION

MEMBER COMPANIES

Challenger Electrical Equipment Corp.
Malvern, PA 19355

Crouse-Hinds Distribution Equipment
A Division Cooper Industries
Earlysville, VA 22936

Custom Switchgear and Controls, Inc.
Santa Clara, CA 94051

Eaton Corp. / Cutler Hammer Products
Milwaukee, WI 53216

Erickson Electrical Equipment Co.
Chicago, IL 60630

General Electric Company
Plainville, CT 06062

Anchor Electric, A Unit of General
Signal Corporation
Manchester, NH 03105

Harvey Hubbell, Inc.
Orange, CT 06477

Milbank Manufacturing Co.
Kansas City, MO 64141

Nix and Miller, Inc.
Buford, GA 30518

Penn Panel and Box Company
Collingdale, PA 19023

Power Controls, Inc.
Commerce, CA 90040

The Pringle Electrical Manufacturing Co.
Ft. Washington, PA 19034

Ryco Manufacturing. Co. Inc.
City of Industry, CA 91748

I-T-E Electrical Products
A Division of Siemans-Allis, Inc.
Tucker, GA 30084

Square D Company
Palatine, IL 60067

Superior Switchboard and Devices
Canton, OH 44702

Unicorn Electrical Products
Anaheim, CA 92806

The Wadsworth Electric Mfg. Co., Inc.
Covington, KY 41012

Westinghouse Electric Corp.
Pittsburgh, PA 15222

Copyright National Electrical Manufacturers Association
Provided by IHS under license with NEMA
No reproduction or networking permitted without license from IHS
Not for Resale