2595512 0078629 538

ADOPTION NOTICE

NEMA-PB2.1, "Proper Handling, Installation, Operation and Maintenance of Deadfront Distribution Switchboards Rated 600 Volts or Less, General Instructions For," was adopted on October 3, 1994 for use by the Department of Defense (DoD). Proposed changes by DoD activities must be submitted to the DoD Adopting Activity: Commanding Officer, Naval Construction Battalion Center, Code 156, 1000 23rd Avenue, Port Hueneme, CA 93043-4301. DoD activities may obtain copies of this standard from the Standardization Document Order Desk, 700 Robbins Avenue, Building 4D, Philadelphia, PA 19111-5094. The private sector and other Government agencies may purchase copies from the National Electrical Manufacturers Association, 2101 L Street, NW, Suite 300, Washington, DC 20037.

Custodians:
Army - ME
Navy - YD-1
Air Force - 99

Adopting Activity
Navy - YD-1

FSC 6110

DISTRIBUTION STATEMENT A. Approved for public release; distribution is unlimited.

Copyright National Electrical Manufacturers Association
Provided by IHS under license with NEMA
No reproduction or networking permitted without license from IHS
Not for Resale

NEMA STANDARDS PUBLICATION PB 2.1-1996

GENERAL INSTRUCTIONS FOR PROPER HANDLING, INSTALLATION, OPERATION, AND MAINTENANCE OF DEADFRONT DISTRIBUTION SWITCHBOARDS RATED 600 VOLTS OR LESS

RETAIN FOR USE OF QUALIFIED MAINTENANCE PERSONNEL

NATIONAL ELECTRICAL MANUFACTURERS ASSOCIATION ■ 1300 N. 17TH STREET, ROSSLYN, VA 22209

Copyright National Electrical Manufacturers Association
Provided by IHS under license with NEMA
No reproduction or networking permitted without license from IHS
Not for Resale

TABLE OF CONTENTS

FOREWORD ii

Section 1 GENERAL 1

Section 2 HANDLING 2

Section 3 STORAGE 4

Section 4 INSTALLATION OF SWITCHBOARD OR ENCLOSURE 5

Section 5 INSTALLATION OF CONDUIT AND CONDUCTORS 6

Section 6 INSTALLATION OF SWITCHBOARD INTERIOR 7

Section 7 STEPS TO BE TAKEN BEFORE ENERGIZING 8

Section 8 ENERGIZING EQUIPMENT 9

Section 9 MAINTENANCE 9

Section 10 PERMISSIBLE LOADING OF SWITCHBOARDS 11

© Copyright 1997 by the National Electrical Manufacturers Association. All rights including translation into other languages, reserved under the Universal Copyright Convention, the Berne Convention or the Protection of Literary and Artistic Works, and the International and Pan American Copyright Conventions.

Copyright National Electrical Manufacturers Association
Provided by IHS under license with NEMA
No reproduction or networking permitted without license from IHS

Not for Resale

FOREWORD

This publication is a guide of practical information containing instructions for the proper handling, installation, operation, and maintenance of deadfront distribution switchboards rated 600 Volts or less.

These instructions do not purport to cover all details or variations in equipment, nor to provide for every possible contingency regarding handling, installation, operation, or maintenance.

It is recommended that work described in this set of instructions be performed only by qualified personnel familiar with the construction and operation of switchboards and that such work be performed only after reading this complete set of instructions. For specific information not covered by these instructions, you are urged to contact the manufacturer of the switchboard directly.

PB 2.1-1996 revises and supersedes PB 2.1-1991.

These recommendations will be reviewed periodically by the Section and updated as necessary.

Vice President, Engineering
National Electrical Manufacturers Association
1300 N. 17th. Street
Rosslyn, Virginia, 22209

This Standards Publication was developed by the Panelboard and Distribution Board Section. Section approval of the standard does not necessarily imply that all section members voted for its approval or participated in its development. At the time it was approved, the Panelboard and Distribution Board Section was composed of the following members:

American Circuit Breaker Co.—Albemarle, NC
Circle AW Products—Portland, OR
Current Technology, Inc.—Richardson, TX
Cutler-Hammer, Inc.—Pittsburgh, PA
The Durham Company—Lebanon, MO
GE—Plainville, CT
Hubbell, Inc.—Bridgeport, CT
Lamson & Sessions—Cleveland, OH
Milbank Manufacturing Company—Kansas City, MO
Penn Panel & Box Company—Collingdale, PA
The Pringle Electrical Mfg. Co.—Fort Washington, PA
Siemens Energy & Automation, Inc.—Alpharetta, GA
Square D Company—Palatine, IL
Thomas & Betts Corporation—Memphis, TN

Copyright National Electrical Manufacturers Association
Provided by IHS under license with NEMA
No reproduction or networking permitted without license from IHS
Not for Resale

Section 1
GENERAL

1.1 SCOPE

This publication covers floor-mounted deadfront switchboards which consist of an enclosure, molded case and low-voltage power circuit breakers, fusible or non-fusible switches, instruments, and metering, monitoring, or control equipment, with associated interconnections and supporting structures. These units are used in the distribution of electricity at:

a. 600 volts and less
b. 6000 amperes or less

1.2 REFERENCED STANDARDS

National Electrical Manufacturers Association
1300 North 17th Street
Rosslyn, Virginia 22209

AB 4-1996	*Guidelines for Inspection and Maintenance of Molded Case Circuit Breakers Used in Commercial and Industrial Applications*
PB 2.2-1988 (R1994)	*Application Guide for Ground Fault Protective Devices For Equipment*
	Guidelines for Handling Water Damaged Electrical Equipment

National Fire Protection Association
Batterymarch Park
Quincy, MA 02269

NFPA 70-1996	*National Electrical Code*
NFPA 70E-1994	*Safety Related Work Practices*

1.3 GENERAL

1.3.1 The successful operation of switchboards is dependent upon proper handling, installation, operation, and maintenance. Neglecting fundamental installation and maintenance requirements may lead to severe personal injury, death, or damage to electrical equipment or other property.

1.3.2 Installation, operation, and maintenance of switchboards should be conducted only by qualified personnel.

1.3.3 For purposes of these guidelines, a qualified person is one who is familiar with the installation, construction, and operation of the equipment and the hazards involved. In addition, the person is:

1.3.3.1 Knowledgeable of the requirements of the *National Electrical Code* and of all other applicable codes, laws, and standards.

1.3.3.2 Trained and authorized to test, energize, clear, ground, tag, and lockout circuits and equipment in accordance with established safety practices.

1.3.3.3 Trained in the proper care and use of protective equipment such as rubber gloves, hard hat, safety glasses or face shields, and flash resistant clothing in accordance with established safety practices.

Copyright National Electrical Manufacturers Association
Provided by IHS under license with NEMA
No reproduction or networking permitted without license from IHS
Not for Resale

1.3.3.4 Trained in rendering first aid.

WARNING: Hazardous voltages in electrical equipment can cause severe personal injury or death. Unless otherwise specified, inspection and maintenance should only be performed on switchboards and equipment to which power has been turned off, disconnected and electrically isolated so that no accidental contact can be made with energized parts. Follow all manufacturer's warnings and instructions.

Safety related work practices, as described in NFPA 70E, part II should be followed at all times.

CAUTION: Hydrocarbon spray propellants and hydrocarbon based sprays or compounds will cause degradation of certain plastics. Contact the switchboard manufacturer before using these products to clean, dry, or lubricate switchboard components during installation or maintenance.

Section 2
HANDLING

These guidelines are provided to help avoid personal injury and equipment damage during handling and to facilitate moving the switchboard at the job site.

2.1 Follow the manufacturer's handling instructions for the specific equipment, if available.

2.2 Handle the switchboard with care to avoid damage to components, the frame or finish.

2.3 Keep the switchboard in an upright position unless otherwise indicated by the manufacturer.

2.4 Verify that the switchboard weight is within the rated capacity of the handling equipment to be used.

2.5 When the switchboard is received, unpack it sufficiently to inspect it for concealed damage and to determine that the shipment is complete and correct.

2.6 If the switchboard is to be stored prior to installation, replace the packing for protection during that period. When conditions permit, leave the packing intact until the switchboard or sections are at their final installation location. If the packing is removed, cover the top and any openings to protect the equipment against dust and debris during the construction period. (See section 3).

2.7 The switchboard should remain secured to the shipping skid to prevent distortion of the bottom of the frame during moving.

2.8 Rod or pipe rollers, with the aid of pinch bars, provide a simple method of moving the switchboard on one floor level if there is little or no incline. Steady the load to prevent tipping.

2.9 A forklift truck may offer a more convenient method of handling the switchboard and has the added advantage of permitting it to be hoisted between levels. Balance the load carefully and use a safety strap when handling or moving switchboards with a forklift.

2.10 When it is necessary to move the switchboard between elevations without a suitable platform elevator, overhead hoisting may be required. Lifting plates and eye bolts (Figure 2-1), or channels, angles, or bars with lift holes (Figure 2-2) may be provided as a permanent or removable part of the switchboard. If they are not, cable, chain, or band slings (Figure 2-3) may be rigged around the switchboard.

2.10.1 Use rigid spreaders (Figure 2-1) or spanner bars (Figure 2-3) to provide the vertical lift on eye bolts and lifting slings to avoid crushing or otherwise damaging the frame or its finish. Lifting bars on long lineups may require additional spreaders to reduce the horizontal compressive force.

Copyright National Electrical Manufacturers Association
Provided by IHS under license with NEMA
No reproduction or networking permitted without license from IHS
Not for Resale

2.10.2 Select or adjust the rigging lengths to compensate for any unequal weight distribution of load and to maintain the switchboard in an upright position.

2.10.3 Do not allow the angle between the lifting cables and vertical to exceed 45 degrees in order to reduce the tension on the rigging and the compressive load on the lifting or spanner bars and spreaders.

2.10.4 Do not pass ropes or cables through the lift holes in bars, angles, or channels. Use slings with safety hooks or shackles.

2.10.5 The switchboard may contain a heavy transformer with overhead lifting means. Consult the manufacturer regarding the removal of the switchboard top covers and the utilization of such internal lifting means.

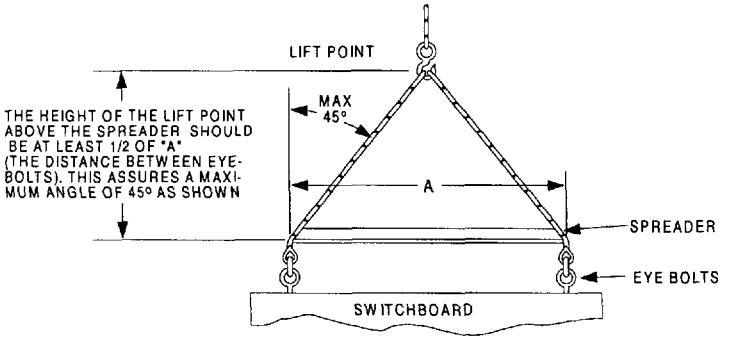

Figure 2-1
LIFTING WITH EYE BOLTS

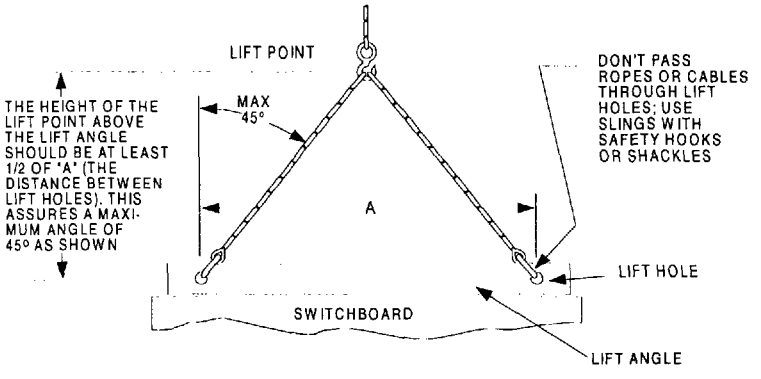

Figure 2-2
LIFTING WITH INTEGRAL LIFT ANGLE

Copyright National Electrical Manufacturers Association
Provided by IHS under license with NEMA
No reproduction or networking permitted without license from IHS
Not for Resale

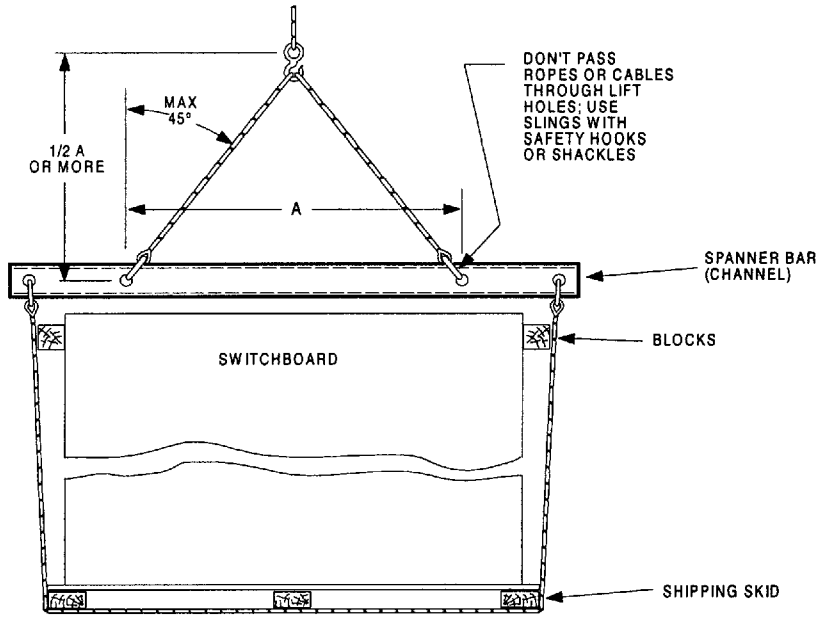

Figure 2-3
LIFTING WITH SLING RIGGING

Section 3
STORAGE

3.1 A switchboard which is not installed and energized immediately should be stored in a clean dry space having a uniform temperature to prevent condensation. Preferably, it should be stored in a heated building having adequate air circulation and protected from dirt, fumes, water, and physical damage.

3.2 It is recommended that switchboards should not be stored outdoors. However, if it must be stored outdoors, cover it securely to provide protection from weather and dirt. Temporary electrical heating should be installed to prevent condensation; approximately 250 watts per section is adequate for the average switchboard size and environment. All loose packing or flammable materials inside the switchboard should be removed before energizing space heaters.

3.3 Outdoor switchboards are not weather resistant until completely and properly installed and should be treated exactly the same as indoor switchboards until after it is installed.

3.4 An un-energized outdoor switchboard should be kept dry internally by installing temporary heating (see 3.2) or by energizing any self-contained space heaters.

Copyright National Electrical Manufacturers Association
Provided by IHS under license with NEMA
No reproduction or networking permitted without license from IHS
Not for Resale

Section 4
INSTALLATION OF SWITCHBOARD OR ENCLOSURE

4.1 Install the switchboard in a neat and workmanlike manner following the manufacturer's installation instructions, if available.

4.2 *Location.* Locate the switchboard in the area indicated on the building floor plans. If in a wet location or outside of the building, the switchboard should be enclosed in an outdoor enclosure or equipment to prevent moisture or water from entering and accumulating within the enclosure. Recommended clearances or working spaces are as follows:

4.2.1 Clearance from walls (not rear accessible)-minimum of 1/2 inch for indoor and 6 inches for outdoor or wet locations.

4.2.2 Working clearances vary substantially depending on voltage and specific applications. See Section 110-16 of the *National Electrical Code.*

NOTE—Working clearances and clearances from walls should not be used for storage. Working spaces should have adequate lighting.

4.3 *Channel Sills.* When channel sills are used, they should be embedded in the concrete floor or grouted on the surface. In either case, they should be installed in an aligned position and be level over the entire length prior to installing the switchboard.

4.4 *Conduits.* Position the switchboard so that the conduit stubs or floor openings are located in the area specified on the manufacturer's drawing. In the absence of drawings, locate the switchboard over the conduits or floor openings so as to provide cable bending space and clearances to energized parts or other obstructions. See Section 384-10 of the *National Electrical Code.*

4.5 *Leveling and Securing.* Install the switchboard in its final position, progressively leveling each section and bolting the frames together if they are separated. If necessary, secure the switchboard to walls or other supporting surfaces. Security should not depend on wooden plugs driven into holes in masonry, concrete, plaster, or similar materials.

4.6 *Splice Bus.* Connect all through and ground bus at shipping breaks, using the splice bus and hardware supplied with the switchboard. Tighten bolted connections in accordance with the manufacturer's torque specifications. If not furnished consult the manufacturer.

4.7 *Grounding and Bonding.* Ground and bond the switchboard as follows:

4.7.1 *Grounded Systems.* Switchboard used as service equipment for a grounded system or as a main switchboard for a separately derived system.

4.7.1.1 If the connection for the grounding electrode system is to be in the switchboard, install a grounding electrode conductor sized in accordance with Sections 250-93 or 250-94 of the *National Electrical Code* from the grounding electrode to the switchboard ground bus or ground terminal designated by the manufacturer. See Sections 250-91 and 250-92 of the *National Electrical Code.*

4.7.1.2 Switchboards used as service equipment on systems that are grounded at any point are required to have a grounded conductor brought to the switchboard in accordance with Section 250-23(b) of the *National Electrical Code.* This conductor is required even if the switchboard is supplying loads that are only phase-to-phase connected.

4.7.1.3 Unless already done at the factory, install the main bonding jumper from the incoming grounded conductor bus (neutral) to the ground bus or other location designated by the manufacturer.

Copyright National Electrical Manufacturers Association
Provided by IHS under license with NEMA
No reproduction or networking permitted without license from IHS
Not for Resale

4.7.1.4 Steps 4.7.1.1 through 4.7.1.3 must effectively connect together the grounding electrode, the switchboard frame, all outgoing equipment grounding conductors, and the grounded conductor bus (neutral) of the system on the supply side of any neutral disconnecting link.

4.7.1.5 Do not connect any grounding conductors to the load side of any neutral disconnecting link or any sensor used for ground fault protection. Do not connect equipment grounding conductors directly to the grounded conductor bus (neutral).

4.7.1.6 Where the switchboard or system is dual fed (double-ended) and has ground fault protection, special precautions are necessary to accomplish proper grounding and bonding. Follow the manufacturer's instructions.

4.7.2 *Ungrounded Systems.* Service Equipment or Separately Derived System Main.

4.7.2.1 Install a grounding electrode conductor sized in accordance with Sections 250-93 or 250-94 of the *National Electrical Code* from the grounding electrode to the switchboard ground bus or ground terminal designated by the manufacturer. See Sections 250-91 and 250-92 of the *National Electrical Code*. This should effectively connect together the grounding electrode, the switchboard frame, and all outgoing equipment grounding conductors.

4.7.3 *Grounded or Ungrounded Systems.* Applications other than service equipment or other than main for separately derived systems.

4.7.3.1 Ground the switchboard frame and any ground bus by means of an equipment grounding conductor having a size in accordance with Section 250-95 of the *National Electrical Code* and run with the main supply conductors or by bonding to the raceway enclosing the main supply conductors in accordance with Sections 250-91 and 250-92 of the *National Electrical Code*.

4.8 *Unused Openings.* Effectively close all unused openings in the switchboard enclosure.

4.9 *Damp Indoor Locations.* In damp indoor locations, shield the switchboard so as to prevent moisture and water from entering and accumulating therein.

4.10 *Unusual Service Conditions.* Unless the switchboard has been designed for unusual service conditions, it should not be located where it will be exposed to ambient temperatures above 40°C (104°F), high humidity, corrosive or explosive fumes, dust, vapors, dripping or standing water, abnormal vibration, mechanical shock, tilting, or other unusual operating conditions.

Section 5
INSTALLATION OF CONDUIT AND CONDUCTORS

5.1 Conduits should be installed to prevent moisture or water from entering and accumulating within the enclosure. All metallic conduits (including stubs) should be bonded to the switchboard. All conduits should be located in the areas recommended by the manufacturer to avoid conductor interference with structural members and energized parts. Before pulling any conductors into the switchboard, verify that their size, temperature rating, and conductor insulation comply with the switchboard markings. See Section 110-14(c) of the *National Electrical Code*.

5.2 Care should be exercised to ensure that the types and temperature ratings of conductors being installed in the switchboard are suitable for use with the terminals which have been provided.

5.3 If compression (crimp) terminals are used, crimp with the tool(s) recommended by the terminal manufacturer.

Copyright National Electrical Manufacturers Association
Provided by IHS under license with NEMA
No reproduction or networking permitted without license from IHS
Not for Resale

5.4 Care should be exercised in stripping insulation from the conductors so as not to nick or ring the conductor. For aluminum, clean all oxide from the stripped portion and apply an oxide inhibiting joint compound. All mechanical terminals should be tightened per the manufacturer's torque specifications. If not furnished, consult the manufacturer.

5.5 Refer to Article 300 of the *National Electrical Code* for proper wiring methods. Conductors should enter the switchboard in the section in which they are to be terminated, except as noted in Section 384-3 of the *National Electrical Code.*

5.6 Provision should be made to locate conductors in the switchboard so that they will be free from physical damage and to avoid overheating. If required by the manufacturer's instructions, secure the conductors as necessary in order to withstand short-circuit forces. The largest practical bending radii should be maintained to avoid damaging the insulation and causing terminals to loosen. Exercise care so that the conductors will not interfere with any moving parts.

5.7 Conductors 1/0 AWG in size and larger may be run in parallel. All parallel conductors should be of the same size, length, and material to assure the equal division of current, as required by Section 310-4 of the *National Electrical Code.* If conductors pass through metal having magnetic properties, all of the circuit conductors, including the neutral, should be run through the same opening, as specified by Section 300-20(a) of the *National Electrical Code.*

5.8 All incoming and outgoing control connections should be made in accordance with the switchboard manufacturer's schematic and wiring diagrams.

5.9 Installation of conductors should be done at temperatures above freezing to prevent conductor insulation from cracking or splitting, unless the conductor insulation is suitable for installation at temperatures below freezing.

Section 6
INSTALLATION OF SWITCHBOARD INTERIOR

6.1 Follow these instructions if the switchboard interior(s) was not mounted at the factory.

6.2 *Unpacking.* Exercise care in unpacking the switchboard interior to prevent damage.

6.3 *Inspection.* Check for shipping damage and check to make sure the interior is the correct one for the installation.

6.4 *Storage.* Store the switchboard interior in a clean dry place and locate it so that it will not be subject to mechanical damage.

6.5 *Cleaning.* Clean the switchboard enclosure of all foreign material prior to the installation of the interior. If parts at connection points are splattered with cement, plaster, paint, or other foreign material, remove the foreign material with great care to avoid damage to the plating.

CAUTION: Hydrocarbon spray propellants and hydrocarbon based sprays or compounds will cause degradation of certain plastics. Contact the switchboard manufacturer before using these products to clean, dry, or lubricate switchboard components during installation or maintenance.

6.6 *Manufacturer's Instructions.* Carefully follow the switchboard manufacturer's instructions.

6.7 *Interior Installation.* Install the interior and tighten it securely in the enclosure. Install the section bus connection to the through bus, if needed.

Copyright National Electrical Manufacturers Association
Provided by IHS under license with NEMA
No reproduction or networking permitted without license from IHS
Not for Resale

Section 7
STEPS TO BE TAKEN BEFORE ENERGIZING

7.1 Tighten all accessible electrical connections to the manufacturer's torque specifications. If such information is not provided with the equipment, consult the manufacturer.

7.2 Remove all blocks or other temporary holding means used for shipment from all component devices and the switchboard interior.

7.3 Check the integrity of all bus mounting means.

7.4 Check the enclosure to see that it has not been damaged in such a manner as to reduce electrical spacings.

7.5 Manually exercise all switches, circuit breakers, and other operating mechanisms to make certain that they operate freely.

7.6 Conduct an electrical insulation resistance test to ensure that the switchboard is free from short circuits and grounds. With the neutral isolated from ground and the switches and circuit breakers open, conduct electrical insulation resistance tests from phase to phase, phase to ground, phase to neutral, and neutral to ground. If the resistance reads less than 1 megohm while testing with the branch circuit devices in the open position, the system may be unsafe and should be investigated. If after the investigation and possible corrections, low readings are still observed, the manufacturer should be contacted.

7.7 Check electrical relays, meters, and instrumentation to determine that connections are made properly and that the devices function properly.

7.8 With loads disconnected, electrically exercise all electrically operated switches, circuit breakers, and other mechanisms to determine that the devices operate properly. An auxiliary source of control power may be necessary to provide power to the electrical operators.

Test the ground fault protection system (if furnished) in accordance with the manufacturer's instructions. See section 230-95 of the *National Electrical Code* and NEMA Standards Publication PB 2.2.

7.10 Set any adjustable time current trip device settings to the proper values. Experience has indicated that damage from overcurrent can be reduced if the devices used for overload and short-circuit protection are set to operate instantaneously (that is, without intentional time delay) at 115 percent of the highest value of phase current which is likely to occur as the result of any anticipated motor starting or welding currents.

7.11 Make certain that field wiring is clear of energized parts and, when specified by the manufacturer, physically secured to withstand the effects of short circuits.

7.12 Check to determine that all grounding connections are properly made. If the switchboard is used as service equipment, make certain that the neutral, if present, is properly bonded to the cabinet. If there is no ground bus, make certain that the sections of the switchboard which are shipped separately are connected in such a way as to ensure a continuous grounding path.

7.13 Remove all foreign material from the inside of the switchboard before closing the enclosure.

7.14 Install covers, close doors, and make certain that no conductors are pinched and that all enclosure parts are properly aligned and tightened.

Copyright National Electrical Manufacturers Association
Provided by IHS under license with NEMA
No reproduction or networking permitted without license from IHS
Not for Resale

Section 8
ENERGIZING EQUIPMENT

WARNING: Hazardous voltages in electrical equipment can cause severe personal injury or death. Energizing a switchboard for the first time after initial installation or maintenance is potentially dangerous.

8.1 Qualified personnel should be present when the equipment is energized for the first time. If short circuit conditions caused by damage or poor installation practices have not been detected in the checkout procedure specified in section 7, serious personal injury and damage can occur when the power is turned on.

8.2 There should be no load on the switchboard when it is energized. Turn off all the downstream loads.

8.3 The equipment should be energized in sequence by starting at the source end of the system and working towards the load end. In other words, energize the main devices, then the feeder devices, and then the branch-circuit devices. Turn the devices on with a firm positive motion.

8.4 After all main, feeder, and branch circuit devices have been closed, loads such as lighting circuits, contactors, heaters, and motors may be turned on.

Section 9
MAINTENANCE

9.1 A maintenance program for switchboards should be conducted on a regularly scheduled basis in accordance with the following:

9.2 A switchboard which has been carrying its regular load for at least 3 hours just prior to inspection should be field tested by feeling the deadfront surfaces of circuit breakers, switches, interior trims, doors, and enclosure sides with the palm of the hand. If the temperature of these surfaces does not permit you to maintain contact for at least 3 seconds, this may be an indication of trouble and investigation is necessary.

WARNING: Hazardous voltages in electrical equipment can cause severe personal injury or death. Unless otherwise specified, inspection and maintenance should only be performed on switchboards to which power has been turned-off, disconnected and electrically isolated so that no accidental contact can be made with energized parts. Follow all manufacturer's warnings and instructions.

Safety related work practices, as described in NFPA 70E, Part II should be followed at all times.

CAUTION: Hydrocarbon spray propellants and hydrocarbon based sprays or compounds will cause degradation of certain plastics. Contact the switchboard manufacturer before using these products to clean, dry, or lubricate switchboard components during installation or maintenance.

9.3 Inspect the switchboard once each year or after any severe short circuit.

9.4 If there is an accumulation of dust and dirt, clean out the switchboard by using a brush, vacuum cleaner, or clean lint-free rags. Avoid blowing dust into circuit breakers or other components. Do not use a blower or compressed air.

9.4.1 Carefully inspect all visible electrical joints and terminals in the bus and wiring system.

9.4.2 Visually check all conductors and connections to be certain that they are clean and secure. Loose and/or contaminated connections increase electrical resistance which can cause overheating. Such overheating is indicated by discoloration or flaking of insulation and/or metal parts. Pitting or

Copyright National Electrical Manufacturers Association
Provided by IHS under license with NEMA
No reproduction or networking permitted without license from IHS
Not for Resale

melting of connecting surfaces is a sign of arcing due to a loose, or otherwise poor connection. Parts which show evidence of overheating or looseness should be cleaned and re-torqued or replaced if damaged. Tighten bolts and nuts at bus joints to manufacturers torque specifications.

CAUTION: Do not remove plating from aluminum parts in joints or terminations. Damage to plating can result in overheating. Replace damaged aluminum parts.

9.4.3 Examine fuse clip contact pressure and contact means. If there is any sign of overheating or looseness follow the manufacturer's maintenance instructions or replace the fuse clips. Loose fuse clips can result in overheating.

9.4.4 BE SURE THAT ALL CONDITIONS WHICH CAUSED THE OVERHEATING HAVE BEEN CORRECTED.

9.5 Check circuit breakers, switches, and fuses to ensure they have the proper ampere, voltage and interrupting ratings. Ensure that non-current-limiting devices are not used as replacements for current-limiting devices. Never attempt to defeat rejection mechanisms which are provided to prevent the installation of the incorrect class of fuse.

9.5.1 Operate each switch or circuit breaker several times to ensure that all mechanisms are free and in proper working order. Replace as required. See NEMA AB 4 for maintenance of molded case circuit breakers.

9.6 Check the operation of all mechanical components. Replace as required.

9.6.1 Exercise switch operating mechanisms and external operators for circuit breakers to determine that they operate freely to their full on and off positions.

9.6.2 Check the integrity of all electrical and mechanical interlocks and padlocking mechanisms.

9.6.3 Whenever practical, check all devices for missing or broken parts, proper spring tension, free movement, corrosion, dirt, and excessive wear.

9.6.4 Adjust, clean, and lubricate or replace parts according to the manufacturers instructions.

9.6.4.1 Use clean nonmetallic light grease or oil as instructed.

9.6.4.2 Do not oil or grease parts of molded case circuit breakers.

9.6.4.3 If no instructions are given on the devices, sliding copper contacts, operating mechanisms, and interlocks may be lubricated with clean, light grease.

9.6.4.4 Wipe off excess lubrication to avoid contamination.

CAUTION: Hydrocarbon spray propellants and hydrocarbon based sprays or compounds will cause degradation of certain plastics. Contact the switchboard manufacturer before using these products to clean, dry, or lubricate switchboard components during installation or maintenance.

9.6.5 Clean and dress readily accessible copper electrical contacts, blades, and jaws according to the manufacturer's instructions when inspection indicates the need.

9.7 Look for and replace deteriorated insulating material and assemblies where sealing compounds have melted.

9.8 Look for any moisture or signs of previous wetness or dripping inside the switchboard. Condensation in conduits or dripping from outside sources is one known cause of switchboard malfunction.

Copyright National Electrical Manufacturers Association
Provided by IHS under license with NEMA
No reproduction or networking permitted without license from IHS
Not for Resale

9.8.1 Seal off any conduits which have dripped condensate, and provide means for further condensate to drain away from the switchboard.

9.8.2 Seal off any cracks or openings which have allowed moisture to enter the enclosure. Eliminate the source of any dripping on the enclosure and any other source of moisture.

9.8.3 Replace or thoroughly dry and clean any insulating material which is damp or wet or shows an accumulation of deposited material from previous wettings.

9.8.4 Inspect all component devices. Replace any component device which shows evidence of moisture damage or has been subjected to water damage or flooding. Additional information may be found in the NEMA document " Guidelines for Handling Water Damaged Electrical Equipment."

9.9 In the event of water damage, e.g., flooding or sprinkler discharge, the manufacturer should be consulted before clean up and corrective action is attempted.

9.10 If a severe electrical short circuit has occurred, the excessive currents may have resulted in structural component and/or bus and conductor damage due to mechanical distortion, thermal damage, metal deposits, or smoke. Examine all devices and bus supports for cracks or breakage. The manufacturer should be consulted before clean up and correction is attempted.

9.11 Test the ground fault protection system (if furnished) in accordance with the manufacturer's instructions. See Section 230-95 of the *National Electrical Code* and NEMA Standards Publication PB 2.2.

9.12 Check insulation resistance (See 7.6) under any of the following conditions:

a. If a severe short circuit has occurred. (See 9.10)
b. If it has been necessary to replace parts or clean insulating surfaces
c. If the switchboard has been exposed to high humidity, condensation, or dripping moisture.

Section 10
PERMISSIBLE LOADING OF SWITCHBOARDS

10.1 For switchboards without main overcurrent protective devices (main lug switchboard), the total continuous load current through the supply bus should not exceed the current rating of the switchboard.

10.2 For switchboards with a single main overcurrent protective device, the total continuous load current on the protective device should not exceed 80 percent of its ampere rating unless the device is rated to carry 100 percent of its ampere rating.

10.3 For switchboards with a multiple main overcurrent protective devices, the total continuous current through the supply bus should not exceed the current rating of the switchboard. The total continuous load current on each main overcurrent protective device should not exceed 80 percent of its ampere rating unless the device is rated to carry 100 percent of its ampere rating.

10.4 For feeder and branch circuit overcurrent protective devices in switchboards, the total continuous load current on the overcurrent protective device should not exceed 80 percent of its ampere rating unless the device is rated to carry 100 percent of its ampere rating.

10.5 Some types of electrical equipment cause harmonics in the electrical system which may result in overheating. This condition should be considered when determining switchboard loading.

Copyright National Electrical Manufacturers Association
Provided by IHS under license with NEMA
No reproduction or networking permitted without license from IHS Not for Resale