2595512 0078629 538

ADOPTION NOTICE

NEMA-PB2.1, "Proper Handling, Installation, Operation and Maintenance of Deadfront Distribution Switchboards Rated 600 Volts or Less, General Instructions For," was adopted on October 3, 1994 for use by the Department of Defense (DoD). Proposed changes by DoD activities must be submitted to the DoD Adopting Activity: Commanding Officer, Naval Construction Battalion Center, Code 156, 1000 23rd Avenue, Port Hueneme, CA 93043-4301. DoD activities may obtain copies of this standard from the Standardization Document Order Desk, 700 Robbins Avenue, Building 4D, Philadelphia, PA 19111-5094. The private sector and other Government agencies may purchase copies from the National Electrical Manufacturers Association, 2101 L Street, NW, Suite 300, Washington, DC 20037.

Custodians:
Army - ME
Navy - YD-1
Air Force - 99

Adopting Activity
Navy - YD-1

FSC 6110

DISTRIBUTION STATEMENT A. Approved for public release; distribution is unlimited.

Copyright National Electrical Manufacturers Association
Provided by IHS under license with NEMA
No reproduction or networking permitted without license from IHS
Not for Resale

NEMA PB*2.1 91 ■ 6470247 0500185 8 ■

NEMA STANDARDS PUBLICATION PB 2.1-1991

GENERAL INSTRUCTIONS FOR PROPER HANDLING, INSTALLATION, OPERATION, AND MAINTENANCE OF DEADFRONT DISTRIBUTION SWITCHBOARDS RATED 600 VOLTS OR LESS

RETAIN FOR USE OF QUALIFIED MAINTENANCE PERSONNEL

NATIONAL ELECTRICAL MANUFACTURERS ASSOCIATION ■ 2101 L STREET, N.W., WASHINGTON, D.C. 20037

Copyright National Electrical Manufacturers Association
Provided by IHS under license with NEMA
No reproduction or networking permitted without license from IHS
Not for Resale

TABLE OF CONTENTS

FOREWORD i

SCOPE i

SECTION 1 GENERAL 1

SECTION 2 HANDLING 1

SECTION 3 STORAGE 2

SECTION 4 INSTALLATION OF SWITCHBOARD OR ENCLOSURE 2

SECTION 5 INSTALLATION OF CONDUIT AND CONDUCTORS 5

SECTION 6 INSTALLATION OF SWITCHBOARD INTERIOR 6

SECTION 7 STEPS TO BE TAKEN BEFORE ENERGIZING 6

SECTION 8 ENERGIZING EQUIPMENT 7

SECTION 9 MAINTENANCE 7

SECTION 10 PERMISSIBLE LOADING OF SWITCHBOARDS 10

LIST OF FIGURES

Figure 2-1 LIFTING WITH EYE BOLTS 3

Figure 2-2 LIFTING WITH INTEGRAL LIFT ANGLE 3

Figure 2-3 LIFTING WITH SLING RIGGING 3

© 1991 National Electrical Manufacturing Association

Copyright National Electrical Manufacturers Association
Provided by IHS under license with NEMA
No reproduction or networking permitted without license from IHS

Not for Resale

GENERAL INSTRUCTIONS FOR PROPER HANDLING, INSTALLATION, OPERATION, AND MAINTENANCE OF DEADFRONT DISTRIBUTION SWITCHBOARDS RATED 600 VOLTS OR LESS

(Approved as Authorized Engineering Information 8-28-1991)

FOREWORD

This publication is a guide of practical information containing instructions for the proper handling, installation, operation, and maintenance of deadfront distribution switchboards rated 600 volts or less.

These instructions do not purport to cover all details or variations in equipment, nor to provide for every possible contingency regarding installation, operation, or maintenance.

It is recommended that work described in this set of instructions be performed only by qualified persons familiar with the construction and operation of switchboards and that such work be performed only after reading this complete set of instructions. For specific information not covered by these instructions, you are urged to contact the manufacturer of the switchboard directly.

These recommendations of the Panelboard and Distribution Board Section of the National Electrical Manufacturers Association will be found useful by architects, electrical engineers, electrical contractors, electricians, maintenance engineers, and others. They will be reviewed periodically by the Section for the purpose of updating them to reflect advancing technology. Please address any comments or questions you may have on the text to:

Vice President, Engineering
National Electrical Manufacturers Association
2101 L Street, N.W., Suite 300
Washington, D.C. 20037-1526

Publication No. PB 2.1-1991 revises and supersedes PB 2.1-1986.

This publication provides information covering floor-mounted deadfront switchboards, rated 6000 amperes or less, 600 volts or less, and consisting of an enclosure, molded case and low-voltage power circuit breakers, fusible or non-fusible switches, instruments, and metering or control equipment, with associated interconnections and supporting structures.

SCOPE

This publication provides information covering floor-mounted deadfront switchboards, rated 6000 amperes or less, 600 volts or less, and consisting of an enclosure, molded case and low-voltage power circuit breakers, fusible or non-fusible switches, instruments, and metering or control equipment, with associated interconnections and supporting structures.

Copyright National Electrical Manufacturers Association
Provided by IHS under license with NEMA
No reproduction or networking permitted without license from IHS
Not for Resale

SECTION 1
GENERAL

1.1 The successful operation of switchboards is dependent upon proper handling, installation, operation, and maintenance. Neglecting fundamental installation and maintenance requirements may lead to personal injury as well as damage to electrical equipment or other property.

1.2 Installation, operation, and maintenance of switchboards should be conducted only by qualified personnel.

1.3 For purposes of these guidelines, a qualified person is one who is familiar with the installation, construction, and operation of the equipment and the hazards involved. In addition, the person is:

1.3.1 Trained and authorized to test, energize, clear, ground, tag, and lockout circuits and equipment in accordance with established safety practices.

1.3.2 Trained in the proper care and use of protective equipment such as rubber gloves, hard hat, safety glasses or face shields, flash resistant clothing, in accordance with established safety practices.

1.3.3 Trained in rendering first aid.

WARNING: HAZARDOUS VOLTAGES IN ELECTRICAL EQUIPMENT CAN CAUSE SEVERE PERSONAL INJURY OR DEATH. UNLESS OTHERWISE SPECIFIED, INSPECTION AND PREVENTIVE MAINTENANCE SHOULD ONLY BE PERFORMED ON SWITCHBOARDS AND EQUIPMENT TO WHICH POWER HAS BEEN TURNED-OFF, DISCONNECTED AND ELECTRICALLY ISOLATED SO THAT NO ACCIDENTAL CONTACT CAN BE MADE WITH ENERGIZED PARTS.

SAFETY RELATED WORK PRACTICES, AS DESCRIBED IN NFPA 70E*, PART II SHOULD BE FOLLOWED AT ALL TIMES.

CAUTION: HYDROCARBON SPRAY PROPELLANTS AND HYDROCARBON BASED SPRAYS OR COMPOUNDS WILL CAUSE DEGRADATION OF CERTAIN PLASTICS. CONTACT THE SWITCHBOARD MANUFACTURER BEFORE USING THESE PRODUCTS TO CLEAN, DRY, OR LUBRICATE COMPONENTS DURING INSTALLATION OR MAINTENANCE.

SECTION 2
HANDLING

2.1 These guidelines are provided to help avoid personal injury and equipment damage during handling, as well as to facilitate moving the switchboard at the job site.

2.2 Follow the manufacturer's handling instructions for the specific equipment, if available.

2.3 Handle the switchboard with care to avoid damage to components, the frame or finish.

2.4 Keep the switchboard in an upright position unless otherwise indicated by the manufacturer.

2.5 Know the capabilities of the moving means available to handle the weight of the switchboard.

2.6 When the switchboard is received, unpack it sufficiently to inspect for concealed damage and to determine that the shipment is complete and correct.

2.7 If the switchboard is to be stored for any length of time prior to installation, replace the packing for protection during that period. Where conditions permit, leave the packing intact until the switchboard or sections are at their final installation location. If the packing is removed, cover the top and openings during the construction period to protect the equipment against dust and debris. (See Section 3.)

* Available from the National Fire Protection Association, Batterymarch Park, Quincy, Massachusetts 02269.

Copyright National Electrical Manufacturers Association
Provided by IHS under license with NEMA
No reproduction or networking permitted without license from IHS
Not for Resale

2.8 The switchboard should remain secured to the shipping skid to prevent distortion of the bottom of the frame during moving.

2.9 Rod or pipe rollers, with the aid of pinch bars, provide a simple method of moving the switchboard on one floor level if there is little or no incline. Steady the load to prevent tipping.

2.10 A forklift truck may offer a more convenient method of handling the switchboard and has the added advantage of permitting it to be hoisted between levels. Balance the load carefully and use a safety strap when handling or moving switchboards with a forklift.

2.11 When it is necessary to move the switchboard between elevations without a suitable platform elevator, overhead hoisting may be required. Lifting plates and eye bolts (Fig. 2-1), or channels, angles, or bars with lift holes (Fig. 2-2) may be provided as a permanent or removable part of the switchboard. If they are not, cable, chain, or band slings (Fig. 2-3) may be rigged around the switchboard.

2.11.1 Use rigid spreaders (Fig. 2-1) or spanner bars (Fig. 2-3) to provide the vertical lift on eye bolts and lifting slings to avoid crushing or otherwise damaging the frame or its finish. Lifting bars on long lineups may require additional spreaders to reduce the horizontal compressive force.

2.11.2 Select or adjust the rigging lengths to compensate for any unequal weight distribution of load and to maintain the switchboard in an upright position.

2.11.3 Do not allow the angle between the lifting cables and vertical to exceed 45 degrees in order to reduce the tension on the rigging and the compressive load on the lifting or spanner bars and spreaders.

2.11.4 Do not pass ropes or cables through the lift holes in bars, angles, or channels. Use slings with safety hooks or shackles.

2.11.5 The switchboard may contain a heavy transformer with overhead lifting means. Consult the manufacturer regarding the removal of the switchboard top covers and the utilization of such internal lifting means.

SECTION 3
STORAGE

3.1 An indoor switchboard which is not installed and energized immediately should be stored in a clean dry space having a uniform temperature to prevent condensation. Preferably, it should be stored in a heated building having adequate air circulation and protected from dirt and water.

3.2 An indoor switchboard that must be stored outdoors or in unheated buildings should be properly covered to ensure adequate protection from weather and dirt. Temporary electrical heating should be installed to prevent condensation; approximately 250 watts per section is adequate for the average switchboard size and environment. All loose packing or flammable materials inside the switchboard should be removed before energizing space heaters.

3.3 An un-energized outdoor switchboard should be kept dry internally by installing temporary heating (see 3.2) or by energizing any self-contained space heaters.

SECTION 4
INSTALLATION OF SWITCHBOARD OR ENCLOSURE

4.1 Install the switchboard in a neat and workmanlike manner following the manufacturer's installation instructions, if available.

4.2 *Location.* Locate the switchboard in the area indicated on the building floor plans. If in a wet location or outside of the building, the switchboard should be enclosed in an outdoor enclosure or equipped to prevent moisture or water from entering and accumulating within the enclosure. Recommended clearances or working spaces are as follows:

Copyright National Electrical Manufacturers Association
Provided by IHS under license with NEMA
No reproduction or networking permitted without license from IHS
Not for Resale

Figure 2-1
LIFTING WITH EYE BOLTS

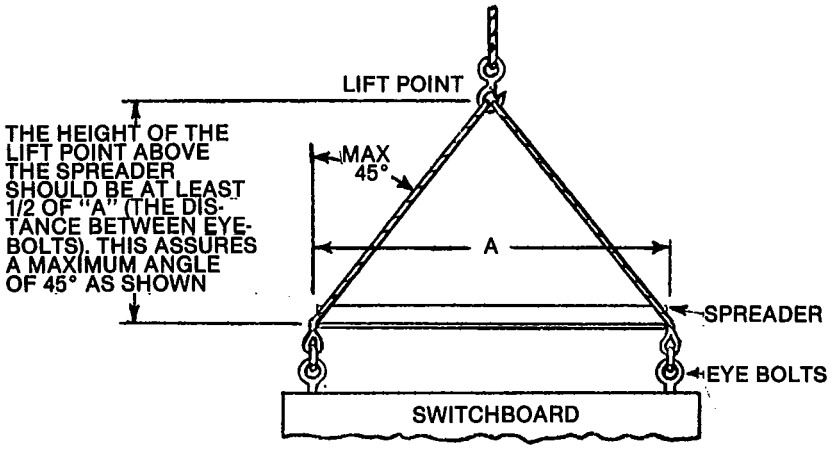

Figure 2-2
LIFTING WITH INTEGRAL LIFT ANGLE

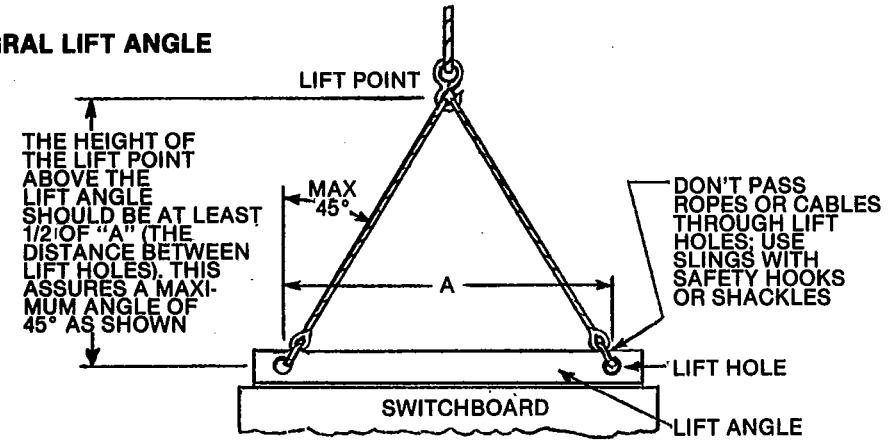

Figure 2-3
LIFTING WITH SLING RIGGING

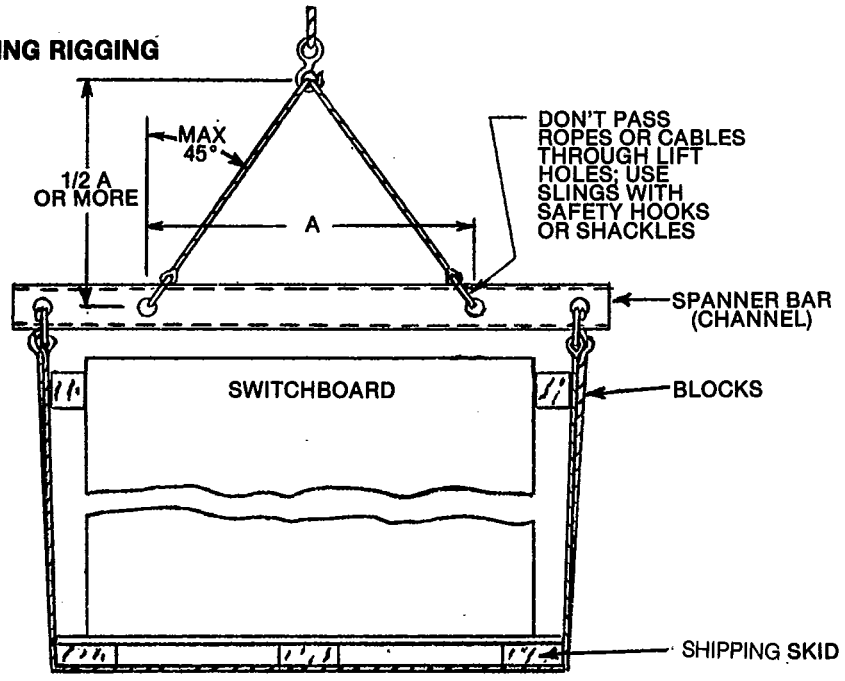

Copyright National Electrical Manufacturers Association
Provided by IHS under license with NEMA
No reproduction or networking permitted without license from IHS
Not for Resale

4.2.1 Clearance from walls (not rear accessible)-minimum of 1/2 inch for indoor and 6 inches for outdoor or wet locations.

4.2.2 Working clearances vary substantially depending on voltage and specific applications. See Section 110-16 of the National Electrical Code.*

NOTE: Working clearances and clearances from walls should not be used for storage. Working spaces should have adequate lighting.

4.3 *Channel Sills.* When channel sills are used, they should be embedded in the concrete floor or grouted on the surface. In either case, they should be installed in an aligned position and be level over the entire length prior to installing the switchboard.

4.4 *Conduits.* Position the switchboard so that the conduit stubs or floor openings are located in the area specified on the manufacturer's drawing. In the absence of drawings, locate the switchboard over the conduits or floor openings so as to provide cable bending space and clearances to energized parts or other obstructions. See Section 384-10 of the National Electrical Code.

4.5 *Leveling and Securing.* Install the switchboard in its final position, progressively leveling each section and bolting the frames together if they are separated. If necessary, secure the switchboard to walls or other supporting surfaces. Do not depend for security on wooden plugs driven into holes in masonry, concrete, plaster, or similar materials.

4.6 *Splice Bus.* Connect all through and ground bus at shipping breaks, using the splice bus and hardware supplied with the switchboard. Tighten bolted connections in accordance with the manufacturer's torque specifications. If not furnished, consult the manufacture.

4.7 *Grounding and Bonding.* Ground and bond the switchboard as follows:

4.7.1 Switchboard used as service equipment for a grounded system or as a main switchboard for a separately derived system.

4.7.1.1 Run a grounding electrode conductor (ground wire) having a size in accordance with Sections 250-93 or 250-94 of the National Electrical Code from the ground electrode to the switchboard ground bus or ground terminal designated by the manufacturer. See Sections 250-91(a) and 250-92(a) of the National Electrical Code.

4.7.1.2 Unless already done at the factory, install the main bonding jumper from the incoming grounded conductor bus (neutral) to the ground bus or other location designated by the manufacturer. If a bonding jumper is not furnished, install one sized in accordance with Section 250-79(e) of the National Electrical Code.

4.7.1.3 Steps 4.7.1.1 and 4.7.1.2 must effectively connect together the grounding electrode, the switchboard frame, all outgoing equipment grounding conductors, and the grounded (neutral) bus of the system on the supply side of any neutral disconnecting link.

4.7.1.4 Do not connect any grounding conductors to the load side of any neutral disconnecting link or any sensor used for ground fault protection. Do not connect equipment grounding conductors to the neutral.

4.7.1.5 Where the switchboard or system is dual fed (double-ended) and has ground fault protection, special precautions are necessary to accomplish proper grounding and bonding. Follow the manufacturer's instructions.

4.7.2 Switchboard used as service equipment for an ungrounded system or as a main switchboard for separately derived system.

4.7.2.1 Run a grounding electrode conductor (ground wire) having a size in accordance with Sections 250-93 or 250-94 of the National Electrical Code from the grounding electrode to the switchboard ground bus or ground terminal designated by the manufacturer. See Sections 250-91(a) and 250-92(a) of the National Electrical Code.

*NFPA Publication Number 70-1990, available from the National Fire Protection Association, Batterymarch Park, Quincy, Mass. 02269

Copyright National Electrical Manufacturers Association
Provided by IHS under license with NEMA
No reproduction or networking permitted without license from IHS
Not for Resale

4.7.2.2 If the system is grounded at any point ahead of the switchboard, the grounded conductor should be run to the switchboard in accordance with Section 250-23(b) of the National Electrical Code and connected to the ground bus or to the switchboard frame and equipment grounding terminal designated by the manufacturer.

4.7.2.3 Steps 4.7.2.1 and 4.7.2.2 must effectively connect together the grounding electrode, the switchboard frame, all outgoing equipment grounding conductors, and any grounded conductor which runs to the switchboard as described in 4.7.2.2.

4.7.3 Switchboard not used as service equipment or as a main switchboard for a separately derived system, and used on either a grounded or ungrounded system.

4.7.3.1 Ground the switchboard frame and any ground bus by means of equipment grounding conductors having a size in accordance with Section 250-95 of the National Electrical Code and run with the main supply conductors or by bonding to the raceway enclosing the main supply conductors in accordance with Sections 250-91(b) and 250-92(b) of the National Electric Code.

4.8 *Unused Openings.* Effectively close all unused openings in the switchboard enclosure.

4.9 *Damp Indoor Locations.* In damp indoor locations, shield the switchboard so as to prevent moisture and water from entering and accumulating therein.

4.10 *Unusual Service Conditions.* Unless the switchboard has been designed for unusual service conditions, it should not be located where it will be exposed to ambient temperatures above 40°C (104°F), high humidity, corrosive or explosive fumes, dust, vapors, dripping or standing water, abnormal vibration, mechanical shock, tilting, or other unusual operating conditions.

SECTION 5
INSTALLATION OF CONDUIT AND CONDUCTORS

5.1 Conduits should be installed to prevent moisture or water from entering and accumulating within the enclosure. All metallic conduits (including stubs) should be bonded to the switchboard. All conduits should be located in the areas recommended by the manufacturer to avoid conductor interference with structural members and energized parts. Before pulling any conductors into the switchboard, verify that their size, temperature rating, and conductor insulation comply with the switchboard markings.

5.2 Care should be exercised to ensure that the terminals are suitable for use with the types of conductors being installed in the switchboard.

5.3 If compression (crimp) terminals are used, crimp with the tool(s) recommended by the terminal manufacturer.

5.4 Care should be exercised in stripping insulation from the conductors so as not to nick or ring the conductor. For aluminum, clean all oxide from the stripped portion and apply an oxide inhibiting joint compound. All mechanical terminals should be tightened per the manufacturer's torque specifications. If not furnished, consult the manufacturer.

5.5 Refer to Article 300 of the National Electric Code for proper wiring methods. Conductors should enter the switchboard in the section in which they are to be terminated, except as noted in Section 384-3 of the National Electrical Code.

5.6 Provision should be made to locate conductors in the switchboard so that they will be free from physical damage and to avoid overheating. If required by the manufacturer's instructions, secure the conductors as necessary in order to withstand short-circuit forces. The largest practical bending radii should be maintained to avoid damaging the insulation and causing terminals to loosen. Exercise care so that the conductors will not interfere with any moving parts.

5.7 Conductors 1/0 AWG in size and larger may be run in parallel. All parallel conductors should be of the same size, length, and material to assure the equal division of current, as required by Section 310-4 of the National Electrical Code. If conductors pass through metal having magnetic properties, all of the circuit conductors, including the neutral, should be run through the same opening, as specified by Section 300-20(a) of the National Electrical Code.

Copyright National Electrical Manufacturers Association
Provided by IHS under license with NEMA
No reproduction or networking permitted without license from IHS
Not for Resale

5.8 All incoming and outgoing control connections should be made in accordance with the switchboard manufacturer's schematic and wiring diagrams.

5.9 Installation of conductors should be done at temperatures above freezing to prevent conductor insulation from cracking or splitting , unless the conductor insulation is suitable for installation at temperatures below freezing.

SECTION 6
INSTALLATION OF SWITCHBOARD INTERIOR

6.1 Follow these instructions if the switchboard interior(s) was not mounted at the factory.

6.2 *Unpacking.* Exercise care in unpacking the switchboard interior to prevent damage.

6.3 *Inspection.* Check for shipping damage and check to make sure the interior is the correct one for the installation.

6.4 *Storage.* Store the switchboard interior in a clean dry place and locate it so that it will not be subject to mechanical damage.

6.5 *Cleaning.* Clean the switchboard enclosure of all foreign material prior to the installation of the interior. If parts at connection points are splattered with cement, plaster, paint, or other foreign material, remove the foreign material with great care to avoid damage to the plating.

CAUTION: HYDROCARBON SPRAY PROPELLANTS AND HYDROCARBON BASED SPRAYS OR COMPOUNDS WILL CAUSE DEGRADATION OF CERTAIN PLASTICS. CONTACT THE SWITCHBOARD MANUFACTURER BEFORE USING THESE PRODUCTS TO CLEAN, DRY, OR LUBRICATE COMPONENTS DURING INSTALLATION OR MAINTENANCE.

6.6 *Manufacturer's Instructions.* Carefully follow the switchboard manufacturer's instructions.

6.7 *Interior Installation.* Install the interior and tighten it securely in the enclosure. Install the section bus connection to the through bus, if needed.

SECTION 7
STEPS TO BE TAKEN BEFORE ENERGIZING

7.1 Tighten all accessible electrical connections to the manufacturer's torque specifications. If such information is not provided with the equipment, consult the manufacturer.

7.2 Remove all blocks or other temporary holding means used for shipment from all component devices and the switchboard interior.

7.3 Check the integrity of all bus mounting means.

7.4 Check the enclosure to see that it has not been damaged in such a manner as to reduce electrical spacings.

7.5 Manually exercise all switches, circuit breakers, and other operating mechanisms to make certain that they operate freely.

7.6 Conduct an electrical insulation resistance test to ensure that the switchboard is free from short circuits and grounds. With the neutral isolated from ground and the switches and circuit breakers open, conduct electrical insulation resistance tests from phase to phase, phase to ground, phase to neutral, and neutral to ground. If the resistance reads less than 1 megohm while testing with the branch circuit devices in the open position, the system may be unsafe and should be investigated. If after the investigation and possible corrections, low readings are still observed, the manufacturer should be contacted.

Copyright National Electrical Manufacturers Association
Provided by IHS under license with NEMA
No reproduction or networking permitted without license from IHS
Not for Resale

7.7 Check electrical relays, meters, and instrumentation to determine that connections are made properly and that the devices function properly.

7.8 With loads disconnected, electrically exercise all electrically operated switches, circuit breakers, and other mechanisms to determine that the devices operate properly. An auxiliary source of control power may be necessary to provide power to the electrical operators.

7.9 Test the ground fault protection system (if furnished) in accordance with the manufacturer's instructions. See Section 230-95 of the National Electrical Code and NEMA Standards Publication PB 2.2-1988, *Application Guide for Ground Fault Protective Devices for Equipment.*

7.10 Set any adjustable time current trip device settings to the proper values. Experience has indicated that damage from overcurrent can be reduced if the devices used for overload and short-circuit protection are set to operate instantaneously (that is, without intentional time delay) at 115 percent of the highest value of phase current which is likely to occur as the result of any anticipated motor starting or welding currents.

7.11 Make certain that field wiring is clear of energized parts and, when specified by the manufacturer, physically secured to withstand the effects of short circuits.

7.12 Check to determine that all grounding connections are made properly. If there is no ground bus, make certain that the sections of the switchboard which are shipped separately are connected in such a way as to ensure a continuous grounding path.

7.13 Remove all foreign material from the inside of the switchboard before closing the enclosure.

7.14 Install covers, close doors, and make certain that no conductors are pinched and that all enclosure parts are properly aligned and tightened.

SECTION 8
ENERGIZING EQUIPMENT

WARNING: HAZARDOUS VOLTAGES IN ELECTRICAL EQUIPMENT CAN CAUSE SEVERE PERSONAL INJURY OR DEATH. ENERGIZING A SWITCHBOARD FOR THE FIRST TIME AFTER INITIAL INSTALLATION OR MAINTENANCE IS POTENTIALLY DANGEROUS.

8.1 Qualified personnel should be present when the equipment is energized for the first time. If short circuit conditions caused by damage or poor installation practices have not been detected in the checkout procedure described in Section 7, serious personal injury and damage can result when the power is turned on.

8.2 There should be no load on the switchboard when it is energized. Turn off all the downstream loads.

8.3 The equipment should be energized in sequence by starting at the source end of the system and working towards the load end. In other words, energize the main devices, then the feeder devices, and then the branch-circuit devices. Turn the devices on with a firm positive motion.

8.4 After all main, feeder, and branch circuit devices have been closed, loads such as lighting circuits, contactors, heaters, and motors may be turned on.

SECTION 9
MAINTENANCE

9.1 A maintenance program for switchboards should be conducted on a regularly scheduled basis in accordance with the following:

9.2 A switchboard which has been carrying its regular load for at least 3 hours just prior to inspection should be field tested by feeling the deadfront surfaces of circuit breakers, switches, interior trims, doors, and enclosure sides with the

Copyright National Electrical Manufacturers Association
Provided by IHS under license with NEMA
No reproduction or networking permitted without license from IHS
Not for Resale

palm of the hand. If the temperature of these surfaces does not permit you to maintain contact for at least 3 seconds, this may be an indication of trouble and investigation is necessary.

WARNING: HAZARDOUS VOLTAGES IN ELECTRICAL EQUIPMENT CAN CAUSE SEVERE PERSONAL INJURY OR DEATH. UNLESS OTHERWISE SPECIFIED, INSPECTION AND PREVENTIVE MAINTENANCE SHOULD ONLY BE PERFORMED ON SWITCHBOARDS AND EQUIPMENT, TO WHICH POWER HAS BEEN TURNED-OFF, DISCONNECTED AND ELECTRICALLY ISOLATED SO THAT NO ACCIDENTAL CONTACT CAN BE MADE WITH ENERGIZED PARTS.

SAFETY RELATED WORK PRACTICES, AS DESCRIBED IN NFPA 70E, PART II SHOULD BE FOLLOWED AT ALL TIMES.

CAUTION: HYDROCARBON SPRAY PROPELLANTS AND HYDROCARBON BASED SPRAYS OR COMPOUNDS WILL CAUSE DEGRADATION OF CERTAIN PLASTICS. CONTACT THE SWITCHBOARD MANUFACTURER BEFORE USING THESE PRODUCTS TO CLEAN, DRY, OR LUBRICATE SWITCHBOARD COMPONENTS DURING INSTALLATION OR MAINTENANCE.

9.3 Inspect the switchboard once each year or after any severe short circuit.

9.3.1 Look for any moisture or signs of previous wetness or dripping inside the switchboard. Condensation in conduits or dripping from outside sources is one known cause of switchboard malfunction.

9.3.1.1 Seal off any conduits which have dripped condensate, and provide a means for further condensate to drain away from the switchboard.

9.3.1.2 Seal off any cracks or openings which have allowed moisture to enter the enclosure. Eliminate the source of any dripping on the enclosure and any other source of moisture.

9.3.1.3 Replace or thoroughly dry and clean any insulating material which is damp or wet or shows an accumulation of deposited material from previous wettings.

9.3.1.4 Inspect all component devices. Replace any component device which shows evidence of moisture damage or has been subjected to water damage or flooding.

9.3.1.5 Look for and replace deteriorated insulating material and assemblies where sealing compounds have melted.

9.3.2 If there is an accumulation of dust and dirt, clean out the switchboard by using a brush, vacuum cleaner, or clean lint-free rags. Avoid blowing dust into circuit breakers or other components. Do not use a blower or compressed air.

9.3.3 Carefully inspect all visible electrical joints and terminals in the bus and wiring systems.

9.3.3.1 Visually check connections to be certain that they are clean and secure. Loose and/or contaminated connections increase electrical resistance which can cause overheating. Such overheating is indicated by discoloration or flaking of insulation and/or metal parts. Pitting or melting of connecting surfaces is a sign of arcing due to a loose, or otherwise poor connection. Parts which show evidence of overheating or looseness should be cleaned and re-torqued or replaced if damaged. Tighten bolts and nuts at bus joints to manufacturers torque specifications.

CAUTION: DO NOT REMOVE PLATING FROM ALUMINUM PARTS IN JOINTS OR TERMINATIONS. REMOVAL OF PLATING CAN RESULT IN OVERHEATING. REPLACE DAMAGED ALUMINUM PARTS.

9.3.3.2 Examine all conductor connections for overheating and other damage as described in 9.3.3.1 above. If evidence of overheating or looseness is present, clean, or if necessary replace, damaged parts and/or conductor sections. Tighten connections as necessary. (See 7.1).

Copyright National Electrical Manufacturers Association
Provided by IHS under license with NEMA
No reproduction or networking permitted without license from IHS
Not for Resale

9.3.3.3 Examine fuse clip contact pressure and contact means. If there is any sign of over-heating or looseness, follow the manufacturers's maintenance instructions or replace the fuse clips. Loose fuse clips can result in overheating.

9.3.3.4 Look for and replace deteriorated insulating material and assemblies where sealing compounds have melted.

9.3.3.5

BE SURE THAT ALL CONDITIONS WHICH CAUSED THE OVERHEATING HAVE BEEN CORRECTED.

9.3.3.6 Test the ground fault protection system (if furnished) in accordance with the manufacturer's instructions. See Section 230-95 of the National Electrical Code and NEMA Standards Publication PB 2.2-1988, *Application Guide for Ground Fault Protective Devices for Equipment.*

9.3.4 Check the operation of all mechanical components. Replace as required. (See NEMA Standards Publication AB 4).

9.3.4.1 Exercise switch operating mechanisms and external operators for circuit breakers to determine that they operate freely to their full on and off positions.

9.3.4.2 Check the integrity of all electrical and mechanical interlocks and padlocking mechanisms.

9.3.4.3 Whenever practical, check all devices for missing or broken parts, proper spring tension, free movement, corrosion, dirt, and excessive wear.

9.3.4.4 Adjust, clean, and lubricate or replace parts according to the manufacturer's instructions.

9.3.5 After a severe short circuit, examine all devices and bus supports for cracks or breakage and replace components as required. See manufacturer's instructions.

9.4 Clean and dress readily accessible copper electrical contacts, blades, and jaws according to the manufacturer's instructions when inspection indicates the need.

9.5 Lubricate the operating parts of switch mechanisms, etc., according to the manufacturer's instructions.

9.5.1 Use clean, nonmetallic, light grease or oil as instructed.

9.5.2 Do not lubricate parts of molded case circuit breakers.

9.5.3 If no instructions are given on the devices, sliding copper contacts, operating mechanisms, and interlocks may be lubricated with clean, light grease.

9.5.4 Wipe off excess lubrication to avoid contamination.

CAUTION: HYDROCARBON SPRAY PROPELLANTS AND HYDROCARBON BASED SPRAYS OR COMPOUNDS WILL CAUSE DEGRADATION OF CERTAIN PLASTICS. CONTACT THE MANUFACTURER BEFORE USING THESE PRODUCTS TO CLEAN, DRY, OR LUBRICATE SWITCHBOARD COMPONENTS DURING INSTALLATION OR MAINTENANCE.

9.6 Operate each switch or circuit breaker several times to make sure that all mechanisms are free and in proper working order. Replace as required.

9.7 Check circuit breakers and fuses to ensure they have the proper ampere, voltage, and interrupting ratings. Ensure that non-current-limiting devices are not used as replacements for current-limiting devices. Do not attempt to defeat rejection mechanisms which are provided to prevent the installation of the incorrect class of fuses.

9.8 Check insulation resistance (See 7.6) as follows:

Copyright National Electrical Manufacturers Association
Provided by IHS under license with NEMA
No reproduction or networking permitted without license from IHS
Not for Resale

9.8.1 If a severe short circuit has occurred. (See 9.3.5);

9.8.2 If it has been necessary to replace parts or clean insulating surfaces; or

9.8.3 If the switchboard has been exposed to high humidity, condensation or dripping moisture.

9.9 If a severe electrical short circuit has occurred, the excessive currents may have resulted in structural component and/or bus and conductor damage due to mechanical distortion, thermal damage, metal deposits, or smoke. The manufacturer should be consulted before clean up and correction is attempted.

9.10 In the event of water damage, i.e., flooding or sprinkler discharge, the manufacturer should be consulted before clean up and corrective action is attempted.

SECTION 10
PERMISSIBLE LOADING OF SWITCHBOARDS

10.1 For switchboards without main overcurrent protective devices (main lug switchboard), the total continuous load current through the supply bus should not exceed the current rating of the switchboard.

10.2 For switchboards with a single main overcurrent protective device, the total continuous load current on the protective device should not exceed 80 percent of its ampere rating unless the device is rated to carry 100 percent of its ampere rating.

10.3 For switchboards with multiple main overcurrent protective devices, the total continuous current through the supply bus should not exceed the current rating of the switchboard. The total continuous load current on each main overcurrent protective device should not exceed 80 percent of its ampere rating unless the device is rated to carry 100 percent of its ampere rating.

10.4 For feeder and branch circuit overcurrent protective devices in switchboards, the total continuous load current on the overcurrent protective device should not exceed 80 percent of its ampere rating unless the device is rated to carry 100 percent of its ampere rating.

10.5 Some types of electrical equipment will cause harmonics in the electrical system which may result in overheating. This condition should be considered when determining switchboard loading, as possible de-rating of equipment may be necessary.

Copyright National Electrical Manufacturers Association
Provided by IHS under license with NEMA
No reproduction or networking permitted without license from IHS
Not for Resale

NEMA STANDARDIZATION

The purpose of NEMA Standards, their classification and status are set forth in certain clauses of the NEMA *Standardization Policies and Procedures* manual and are referenced below:

Purpose of Standards

National Electrical Manufacturers Association Standards are adopted in the public interest and are designed to eliminate misunderstandings between the manufacturer and the purchaser and to assist the purchaser in selecting and obtaining the proper product for their particular needs. Existence of a National Electrical Manufacturers Association Standard does not in any respect preclude any member or nonmember from manufacturing or selling products not conforming to the standard.

(Standardization Policies and Procedures, p. 1)

Definition of a Standard

A standard of the National Electrical Manufacturers Association defines a product, process or procedure with reference to one or more of the following: nomenclature, composition, construction, dimensions, tolerances, safety, operating characteristics, performance, rating, testing, and the service for which they are designed.

(Standardization Policies and Procedures, p. 2)

Dimensions

Where dimensions are given for interchangeability purposes, alternate dimensions satisfying the other provisions of the Standards Publication may be capable of otherwise equivalent performance.

(Standardization Policies and Procedures, p. 8)

Categories of Standards

National Electrical Manufacturers Association Standards are of three classes:

1. NEMA Standard, which relates to a product, process or procedure commercially standardized and subject to repetitive manufacture, which standard has been approved by at least 90 percent of the members of the Subdivision eligible to vote thereon;
2. Suggested Standard for Future Design, which may not have been regularly applied to a commercial product, but which suggests a sound engineering approach to future development, which standard has been approved by at least two-thirds of the members of the Subdivision eligible to vote thereon.
3. Adoptive Standard, which is adopted in whole or in part from the standards of another organization, either domestic, regional, or international.

(Standardization Policies and Procedures, pp 7 & 16)

Authorized Engineering Information

Authorized Engineering Information consists of explanatory data and other engineering information of an informative character not falling within the classification of NEMA Standard or Suggested Standard for Future Design, which standard has been approved by at least two-thirds of the members of the Subdivision eligible to vote on the standard.

(Standardization Policies and Procedures, pp. 7 & 16)

Official Standards Proposal

An Official Standards Proposal is an official draft of a proposed standard which is formally recommended to an outside organization(s) for consideration, comment and/or approval, and which has been approved by at least 90 percent of the members of the Subdivision eligible to vote thereon. *(Standardization Policies and Procedures, pp 7 & 16)*

Identification of Status

Standards in NEMA Standards Publications are identified in the foreword or following each standard as "NEMA Standard" or "Suggested Standard for Future Design." These indicate the status of the standard. These words are followed by a date which indicates when the standard was adopted in its present form by the Association.

The material identified as "Authorized Engineering Information" and "Official Standards Proposal" is designated similarly.

July 17, 1990

Copyright National Electrical Manufacturers Association
Provided by IHS under license with NEMA
No reproduction or networking permitted without license from IHS
Not for Resale

PANELBOARD AND DISTRIBUTION BOARD SECTION OF THE NATIONAL ELECTRICAL MANUFACTURERS ASSOCIATION

MEMBER COMPANIES

American Circuit Breaker Company
Albemarle, NC 28001

Anchor Electric
Manchester, NH 03105

Challenger Electrical Equipment Corporation
Malvern, PA 19355

Circle AW Products
Portland, OR 44104

The Cleveland Switchboard Company
Cleveland, OH 44104

Cooper Distribution Equipment Division
Charlottesville, VA 22906

Custom Switchgear & Controls, Inc.
Santa Clara, CA 95051

The Durham Company
Lebanon, MO 65536

Eaton Corp., Cutler-Hammer Products
Milwaukee, WI 53216

Electrical Enclosure Manufacturing
Pell City, AL 35125

Erickson Electrical Equipment Company
Elk Grove Village, IL 60007

General Electric Company
Plainville, CT 06062

Hubbell, Inc.
Bridgeport, CT 06062

Merlin Gerin, Inc.
Smyrna, GA

Milbank Manufacturing Company
Kansas City, MO 64141-0028

Penn Panel & Box Company
Colingdale, PA 19023

Power Controls, Inc.
Commerce, CA 90040

Pringle Electrical Manufacturing Company
Fort Washington, PA 19034

Ryco Electrical Products
Pomona, CA 91768

Siemens Energy and Automation, Inc.
Raleigh, NC 27626-0503

Square D Company
Palatine, IL 60037

Superior Switchboard & Devices
Canton, OH 44702

Unicorn Electric Products
Anaheim, CA 92806

Universal Manufacturing Company
Duncanville, TX 75137

Westinghouse Electric Corporation
Sumter, SC 29150

Copyright National Electrical Manufacturers Association
Provided by IHS under license with NEMA
No reproduction or networking permitted without license from IHS
Not for Resale