NEMA Standards Publication NU 1-2001

Performance Measurements of Scintillation Cameras

Published by

National Electrical Manufacturers Association
1300 North 17th Street, Suite 1847
Rosslyn, VA 22209 USA

© Copyright 2001 by the National Electrical Manufacturers Association. All rights including translation into other languages, reserved under the Universal Copyright Convention, the Berne Convention for the Protection of Literary and Artistic Works, and the International and Pan American Copyright Conventions.

--`,,`-`-`,,`,,`,`,,`---

Copyright National Electrical Manufacturers Association
Provided by IHS under license with NEMA
No reproduction or networking permitted without license from IHS

Not for Resale

NOTICE AND DISCLAIMER

The information in this publication was considered technically sound by the consensus of persons engaged in the development and approval of the document at the time it was developed. Consensus does not necessarily mean that there is unanimous agreement among every person participating in the development of this document.

The National Electrical Manufacturers Association (NEMA) standards and guideline publications, of which the document contained herein is one, are developed through a voluntary consensus standards development process. This process brings together volunteers and/or seeks out the views of persons who have an interest in the topic covered by this publication. While NEMA administers the process and establishes rules to promote fairness in the development of consensus, it does not write the document and it does not independently test, evaluate, or verify the accuracy or completeness of any information or the soundness of any judgments contained in its standards and guideline publications.

NEMA disclaims liability for any personal injury, property, or other damages of any nature whatsoever, whether special, indirect, consequential, or compensatory, directly or indirectly resulting from the publication, use of, application, or reliance on this document. NEMA disclaims and makes no guaranty or warranty, express or implied, as to the accuracy or completeness of any information published herein, and disclaims and makes no warranty that the information in this document will fulfill any of your particular purposes or needs. NEMA does not undertake to guarantee the performance of any individual manufacturer or seller's products or services by virtue of this standard or guide.

In publishing and making this document available, NEMA is not undertaking to render professional or other services for or on behalf of any person or entity, nor is NEMA undertaking to perform any duty owed by any person or entity to someone else. Anyone using this document should rely on his or her own independent judgment or, as appropriate, seek the advice of a competent professional in determining the exercise of reasonable care in any given circumstances. Information and other standards on the topic covered by this publication may be available from other sources, which the user may wish to consult for additional views or information not covered by this publication.

NEMA has no power, nor does it undertake to police or enforce compliance with the contents of this document. NEMA does not certify, test, or inspect products, designs, or installations for safety or health purposes. Any certification or other statement of compliance with any health or safety–related information in this document shall not be attributable to NEMA and is solely the responsibility of the certifier or maker of the statement.

--`,,`,,`-`-`,,`,,`,`,,`---

Copyright National Electrical Manufacturers Association
Provided by IHS under license with NEMA
No reproduction or networking permitted without license from IHS
Not for Resale

CONTENTS

Page

Foreword……ii

Section 1 REFERENCED PUBLICATIONS, DEFINITIONS, AND TEST EQUIPMENT

1.1 References……1
1.2 General Definitions……1
1.3 Test Equipment, Conditions, and Results……3

Section 2 PRIMARY TESTS OF SINGLE CRYSTAL GAMMA CAMERAS

2.1 Intrinsic Spatial Resolution……5
2.2 Intrinsic Energy Resolution……7
2.3 Intrinsic Flood Field Uniformity……8
2.4 System Spatial Resolution Without Scatter……10
2.5 System Alignment……11
2.6 Spect Reconstructed Spatial Resolution Without Scatter……13
2.7 Wholebody System Spatial Resolution Without Scatter……15

Section 3 SECONDARY TESTS OF SINGLE CRYSTAL GAMMA CAMERA SYSTEMS

3.1 Intrinsic Spatial Linearity……17
3.2 Multiple Window Spatial Registration……18
3.3 Intrinsic Count Rate Performance in Air……20
3.4 System Count Rate Performance With Scatter……22
3.5 Intrinsic Spatial Resolution at 75,000 Counts Per Second……24
3.6 Intrinsic Flood Field Uniformity at 75,000 Counts Per Second……24
3.7 System Spatial Resolution With Scatter……24
3.8 System Planar Sensitivity and Penetration……25
3.9 Detector Shielding……28
3.10 Detector-Detector Sensitivity Variation……29
3.11 Spect Reconstructed Spatial Resolution With Scatter……30
3.12 System Volume Sensitivity……31
3.13 Reconstructed Image Uniformity……33

Section 4 TESTS OF DISCRETE PIXEL DETECTOR CAMERAS

4.1 Intrinsic Spatial Resolution……35
4.2 Intrinsic Spatial Linearity……35
4.3 Intrinsic Energy Resolution……35
4.4 System Uniformity……36
4.5 Multiple Window Spatial Registration……37
4.6 Intrinsic Count Rate Performance in Air……39
4.7 System Count Rate Performance With Scatter……40
4.8 Intrinsic Spatial Resolution at 75,000 Counts Per Second……42
4.9 System Flood Field Uniformity at 400,000 Counts Per Second……42
4.10 System Spatial Resolution With and Without Scatter……42
4.11 System Planar Sensitivity……43
4.12 Detector Shielding……44

© Copyright 2001 by the National Electrical Manufacturers Association.

Copyright National Electrical Manufacturers Association
Provided by IHS under license with NEMA
No reproduction or networking permitted without license from IHS
Not for Resale

Foreword

User input has been considered in the development of this Standards Publication. The Standards Publication was developed by the Nuclear Section of the National Electrical Manufacturers Association, which will periodically review it for any revisions necessary to keep it up to date with advancing technology. Proposed or recommended revisions should be submitted to:

Vice President, Engineering Department
National Electrical Manufacturers Association
1300 North 17th Street, Suite 1847
Rosslyn, VA 22209. USA

CAUTION: Persons using this measurement standard must be in compliance with all applicable federal and state regulations (Ref: NRC Regulatory Guide 10.8, *Guide for the Preparation of Applications for Medical Programs*) for the use, handling, and possession of radioactive material.

The purpose of this Standards Publication is to provide a uniform criterion for the measurement and reporting of scintillation camera performance parameters by which a manufacturer may specify his device and, when doing so, reference NEMA Standards Publication No. NU 1-2000, Performance Measurements of Scintillation Cameras. This standard does not establish minimum performance levels.

Specific measurement equipment, as set forth herein, is required in order to accomplish the purpose of this standard, the uniform and accurate specification of performance characteristics.

Without this equipment, the measurements performed would be limited, inaccurate, non-quantitative, or too time consuming.

1. Reason for Changes

The regulations regarding the maintenance of standards by NEMA requires that the standards be reviewed and, if necessary, updated every 5 years. In anticipation of the year 2000 review, a working party was established by the Nuclear Section. In early 1999 a survey was circulated to a broad group of manufacturers, users, and academic experts in nuclear medicine equipment, asking for opinions on the validity and shortcomings of the current (1994) standard. The changes in the current revision are a direct result of that survey.

2. The Major Changes to Tests

The principal area of change is the addition of new tests to verify the alignment of multi-detector camera systems. These changes are:

2.6 System Alignment
3.9 Detector – Detector Sensitivity Variation

The other changes to specific tests are:

3.7 System Planar Sensitivity and Penetration - the test is augmented to measure septal penetration. There is approximately 5% difference in sensitivity when measured using 1994 NU-1 vs. proposed 2000 NU-1 (see details in Section 4).

Detector Shielding: the test is modified to be more representative of clinical practice.

© Copyright 2001 by the National Electrical Manufacturers Association.

Copyright National Electrical Manufacturers Association
Provided by IHS under license with NEMA
No reproduction or networking permitted without license from IHS Not for Resale

3. Changes in Structure

Previous revisions of the document defined two different levels of standard: "Class Standards" and "Performance Standards". This distinction has been criticized on several grounds. It created a fundamental incompatibility with other standards produced by NEMA and by other important organizations, such as the IEC. It made explicit requirements on production testing which were not felt to be justified; and it unnecessarily restricted product specifications.

The working group removed this distinction from the revised standard, but has attempted to deal with the issues that gave rise to the distinction in the first place. Performance standards were required to be performed by the manufacturer on every unit built, and every unit was required to meet, or exceed the specification. Class standards were required to be performed only on samples, and they specification for these was expected to be "typical".

In the present draft, frequency of testing is left to the manufacturer. For all tests, each sample should meet, or exceed its specification, unless there is some special difficulty in making an accurate measurement. For example, the sensitivity measurements (3.6 and 3.10) cannot be more accurate than the calibration of the radionuclide source, and even national standards bureaus have difficulty producing precisely calibrated sources of Tc-99m, it seems appropriate that sensitivities be quoted as "typical". The performance items where it was felt that a specification of "typical values" is justified are:

- Count Rate Performance (in air and with scatter)
- System Planar Sensitivity and Penetration
- Detector-Detector Sensitivity Variation
- System Volume Sensitivity

For all other tests the specification should be met (or exceeded) by all devices.

Each test now has an explicit statement in the introductory section stating either,
- the measured values must meet or exceed the standard, or
- the specification is typical of system performance.

Finally, the tests have been grouped into three categories. The first category (Section 2 of the document) contains those tests which specify the essential performance of the system in clinical practice. The second category (Section 3 of the document) contains tests which evaluate more subtle performance features (for example, detector shielding, and multiple window spatial registration), or measure parameters that are less important for modern cameras (examples include resolution at 75,000 kcps, and counting rate performance). The third category (Section 4) is tests of multiple crystal cameras, which is largely unchanged (except for the abolition of class and performance standards), and is preserved for historical reasons.

Scope

This Standards Publication establishes definitions, quantitative measurements of performance characteristics, and reporting techniques for the specification of the following scintillation camera parameters:

a) Intrinsic spatial resolution
b) Intrinsic spatial linearity
c) Intrinsic energy resolution
d) Intrinsic flood field uniformity
e) System spatial resolution without scatter
f) System alignment
g) SPECT reconstructed spatial resolution without scatter
h) Whole body system spatial resolution without scatter
i) Multiple window spatial registration

© Copyright 2001 by the National Electrical Manufacturers Association.

Copyright National Electrical Manufacturers Association
Provided by IHS under license with NEMA
No reproduction or networking permitted without license from IHS Not for Resale

j) Intrinsic count rate performance in air and with scatter
k) System planar sensitivity and penetration
l) Detector shielding
m) Detector-detector sensitivity variation
n) SPECT reconstructed spatial resolution with scatter
o) System volume sensitivity

Inclusion—Types of medical radionuclide imaging instruments included in this standard are:

a) Single detector, single crystal scintillation cameras
b) Single detector tomographic scintillation cameras
c) Multiple detector planar and tomographic scintillation cameras
d) Whole body scintillation camera devices
e) Discrete pixel detector scintillation cameras

Exclusions:

a) Coincidence Imaging gamma cameras or systems (these are covered by NU-2).
b) All medical radionuclide imaging devices not included in the above.

© Copyright 2001 by the National Electrical Manufacturers Association.

Copyright National Electrical Manufacturers Association
Provided by IHS under license with NEMA
No reproduction or networking permitted without license from IHS
Not for Resale

Section 1
REFERENCED PUBLICATIONS, DEFINITIONS, AND TEST EQUIPMENT

1.1 REFERENCES

International Electrotechnical Commission
3, rue de Varembe
Geneva, Switzerland

Technical Publication IEC IS 60789
Characteristics and Test Methods for Anger Type Gamma Cameras Second Edition, 1992

Technical Publication IEC IS 61675-2
Radionuclide imaging devices – Characteristics and Test Conditions – Part 2: Single photon emission Computed tomographs (SPECT) First Edition, 1998

Nuclear Regulatory Commission
1717 H St., N.W.
Washington, DC 20006

NRC Regulatory
Guide for the Preparation of Applications for Medical Programs, Appendix C, Methods for Calibration for Dose Calibrators, Guide 10.8, August 1987

1.2 GENERAL DEFINITIONS

This Standards Publication is classified as NEMA Standard unless otherwise indicated and establishes definitions, quantitative measurement of performance characteristics, and reporting techniques.

absolute linearity: the amount of positional distortion or displacement of the X and Y coordinates over a field of view of the scintillation camera.

central Field of View (CFOV): the area defined by scaling all linear dimensions of the Useful Field of View (UFOV) by a factor of 75%.

detector: that component of the scintillation camera which detects incident gamma radiation for the purpose of imaging and counting.

differential linearity: the amount of positional distortion or displacement over a limited distance.

differential uniformity: the amount of count density change per defined unit distance when the detector's incident gamma radiation is a homogeneous flux over the field of measurement.

digital resolution: the size of the pixel used to sample analog data.

energy resolution: a term used to characterize the ability of a gamma camera to distinguish between photons of different energies.

energy window: range of gamma and x-ray energies that are to be accepted and processed. The window is expressed as a range of energies (e.g., 120–160 keV) or as a percentage of an expected peak energy (e.g., 15% of 140 keV). When expressed as percentage the peak energy must always be specified, and

© Copyright 2001 by the National Electrical Manufacturers Association.

Copyright National Electrical Manufacturers Association
Provided by IHS under license with NEMA
No reproduction or networking permitted without license from IHS
Not for Resale

the window is always symmetrical about the peak energy value (e.g., 15% window at 140 keV is the same as a window from 130 to 149 keV).

foldover: describes the progressive decrease in the observed count rate with increasing levels of radioactivity that occurs after the maximum count rate capacity of a scintillation camera is exceeded.

full width at half maximum (FWHM): the measure of the spread of a point or line spread function measured between locations 50 percent down on each side from the peak amplitude.

full width at tenth maximum (FWTM): the measure of the spread of a point or line response function measured between locations 90 percent down on each side from the peak amplitude.

integral uniformity: a measure of the maximum count density variation over a defined large area of the scintillation detector for a uniform input gamma flux to the Useful Field of View of the camera.

input count rate: the rate of scintillation events that are accepted by the energy window and would be recorded as the observed count rate if there were no dead time in the system. At low count rates (less than 4000 cps) the input count rate is assumed to be the same as the observed count rate because dead time losses are negligible.

intrinsic: a term used to describe performance characteristics of a scintillation camera that exclude external variables which affect these specifications, for example collimators or display devices.

linear interpolation: refers to the method of calculating an intermediate value that lies on a straight line between two known values.

observed count rate: the number of gamma rays per unit time recorded by the scintillation camera's counting electronics.

photopeak: the characteristic energy distribution resulting from the collection of total photon energy absorbed by the detector.

pixel: a picture element used to store a value in a digital memory. It represents an area defined by dimensions in X and Y directions at a known position defined by X and Y coordinates.

scatter: photons that have lost part of their energy due to interaction with a medium, such as water, plastic, or tissue.

sensitivity: the observed count rate per unit of radioactivity.

spatial Linearity: the amount of positional distortion or displacement of the measured position of photons relative to the actual position where those detected photons entered the detector.

spatial resolution: a term which characterizes the scintillation camera's ability to accurately resolve spatially separated radioactive sources.

spectrum: a plot of the number of detected gamma rays versus the measured energy of the gamma rays.

standard deviation: a statistical index of the degree of variability within a distribution. In a normal distribution, 68 percent of the observations made will be within plus or minus one standard deviation from the mean value.

system: a term used to refer to the performance of the camera detector as it would be used in a clinical environment, including components such as a collimator and supporting gantry.

© Copyright 2001 by the National Electrical Manufacturers Association.

Copyright National Electrical Manufacturers Association
Provided by IHS under license with NEMA
No reproduction or networking permitted without license from IHS
Not for Resale

test pattern: a lead pattern that projects a known shadow of itself when illuminated by gamma rays from a specified source; used as controlled input for measurement of scintillation camera parameters.

useful Field of View (UFOV): the area of the detector that is used for imaging gamma rays and x-rays. It is defined by a dimensioned figure supplied by the manufacturer.

1.3 TEST EQUIPMENT, CONDITIONS, AND RESULTS

1.3.1 Source Holders and Test Fixtures

A number of different source holders are required for the performance of the procedures. Each source holder is described in the individual procedure for which it is required. Manufacturing tolerances and materials of source holders are often critical in ensuring precise and reproducible measurements. Care has been taken to make the design of the source holders as simple as possible, consistent with the requirements for precision and accuracy in the measurement procedures. All dimensional tolerances shall be ±10% unless otherwise specified.

1.3.2 Radiation Sources

A variety of different shapes and activities of radiation sources is required. The majority of the tests use Tc-99m. However Co-57 can often be substituted for Tc-99m as indicated in individual procedures. Ga-67 is required to perform the Multiple Window Spatial Registration procedures.

Some procedures for discrete pixel detector cameras recommend the use of Am-241 point source. Generally, the procedures can also be performed with other radionuclides provided the radionuclide used is clearly reported with the test results. It should be noted that some of the sources listed here may require special licenses for possession.

1.3.3 Test Conditions

All tests shall be performed in a clinically consistent mode of operation with appropriate corrections applied: energy, linearity and uniformity corrections being employed, and normal count rate mode.

If field uniformity, energy, or linearity corrections are employed, all measurement shall be consistently performed with these corrections on and the results so indicated. The energy windows utilized should also be specified. Any additional tests at variance with the above conditions or test parameters, shall be separately reported and the variances shall be clearly indicated.

If, for quality assurance or other purposes, the manufacturer employs radionuclides other than those prescribed by this standard, he shall demonstrate traceability between the radionuclide prescribed for the measurement and the radionuclide employed.

1.3.4 Reporting

For each test described, it is clearly stated in the introductory section whether each system is expected to “meet or exceed” the manufacturer’s specification, or whether the specification should be considered “typical” performance. Typical specifications are used when the measurement is sufficiently complicated or time-consuming that measuring large numbers of units is difficult (e.g. Intrinsic Count Rate Performance), or where there are inherent difficulties in obtaining a very accurate measurement in a manufacturing or hospital environment (e.g. System Planar Sensitivity and System Volume sensitivity).

© Copyright 2001 by the National Electrical Manufacturers Association.

Copyright National Electrical Manufacturers Association
Provided by IHS under license with NEMA
No reproduction or networking permitted without license from IHS
Not for Resale

© Copyright 2001 by the National Electrical Manufacturers Association.

--`,,`,,`-`-`,,`,,`,`,,`---

Copyright National Electrical Manufacturers Association
Provided by IHS under license with NEMA
No reproduction or networking permitted without license from IHS

Not for Resale

Section 2
PRIMARY TESTS OF SINGLE CRYSTAL GAMMA CAMERAS

2.1 INTRINSIC SPATIAL RESOLUTION

Intrinsic spatial resolution measurements shall meet or exceed the specification.

2.1.1 Test Conditions

The radionuclide employed for this test shall be Tc-99m. A source holder, which shields the source from walls, ceilings and personnel without restricting the gamma flux from the source to the camera (as shown in Figure 2-1), shall be employed. One or more copper plates, as shown in Figure 2.1, may be used to adjust the count rate. The energy window for Tc-99m shall be 15 percent centered on the photopeak. The count rate shall not exceed 20,000 cps through the energy window.

If other radionuclides are used, the energy window should be set according to the manufacturer's recommendations.

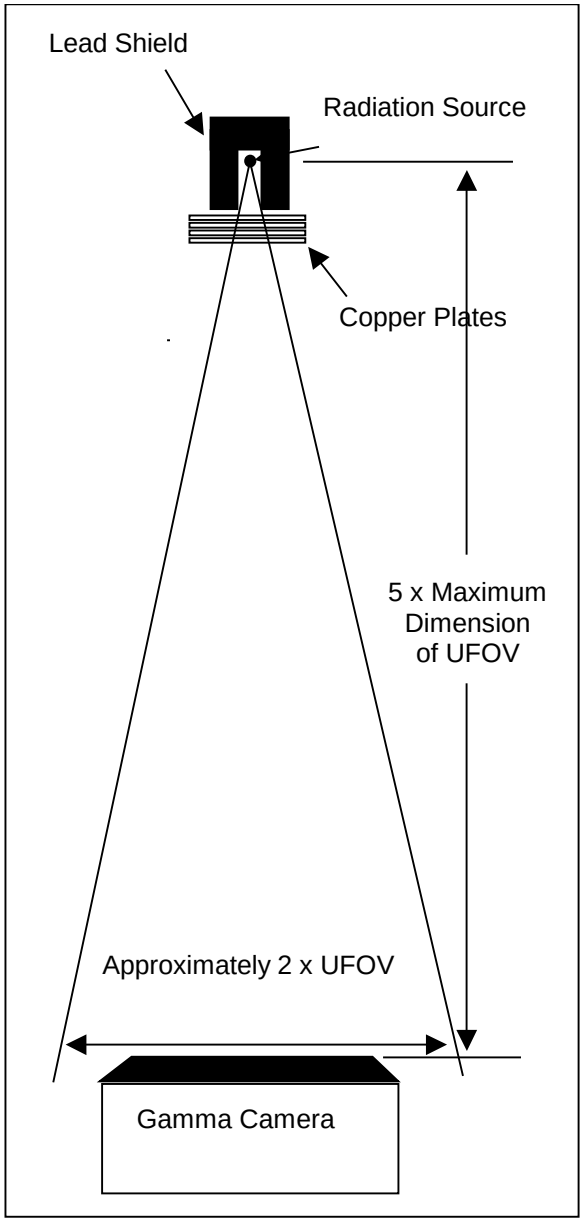

Figure 2-1
COLLIMATED SOURCE GEOMETRY

2.1.2 Test Equipment

The test pattern shall consist of a lead mask in closest possible proximity to the crystal, covering the entire UFOV with 1 millimeter wide parallel slits. Adjacent slit centers shall be 30 millimeters from each other (see Figure 2-2 which shows the geometry for rectangular field of view). The thickness of the mask shall be 3 millimeters for Tc-99m.

2.1.3 Measurement Procedure

The lead mask with the parallel slits shall be positioned on the camera detector with one of the slits centered perpendicular to the axis of measurement. The radionuclide shall be a point source centered at least five times the largest linear dimension of the UFOV above the lead mask with the parallel slits. The digital resolution perpendicular to the slits is recommended to be less than or equal to 0.1 FWHM. The digital resolution parallel to the slits shall correspond to a channel width less than or equal to 30 millimeters (i.e. a profile up to 30 mm wide is used). At least 1,000 counts shall be collected in the peak channel of each line spread function measurement. Full Width at Half Maximum (FWHM) and Full Width at Tenth Maximum (FWTM) of the line-spread function shall be measured.

--`,,`-`-`,,`,,`,`,,`---
© Copyright 2001 by the National Electrical Manufacturers Association.
Copyright National Electrical Manufacturers Association
Provided by IHS under license with NEMA
No reproduction or networking permitted without license from IHS
Not for Resale

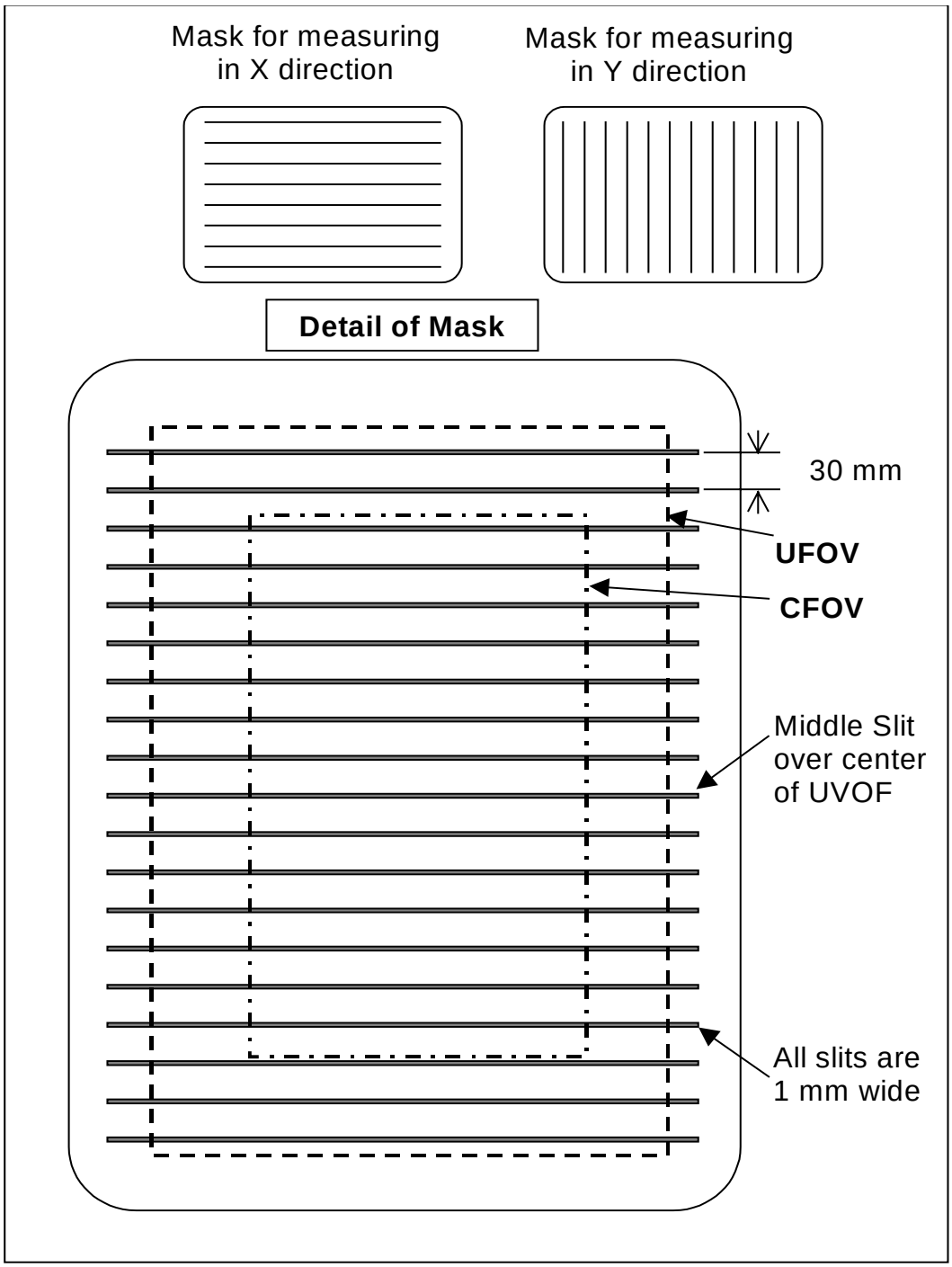

Figure 2-2
LEAD MASKS FOR MEASUREMENT OF SPATIAL RESOLUTION AND LINEARITY

© Copyright 2001 by the National Electrical Manufacturers Association.

Copyright National Electrical Manufacturers Association
Provided by IHS under license with NEMA
No reproduction or networking permitted without license from IHS
Not for Resale

2.1.4 Calculations and Analysis

If the digital resolution perpendicular to the slits is less than or equal to 0.1 FWHM, then the maximum value pixel is taken to be the peak value.

If the digital resolution perpendicular to the slits is more than 0.1 FWHM, a three point parabolic fit, using the peak point in each line spread function and its two nearest neighboring points respectively, shall be employed. The peak value shall be then determined from the largest value of this parabolic fit (see Figure 2-3).

The half maximum and tenth maximum locations shall be determined by linear interpolations from the nearest two neighboring points of the half peak value and the tenth peak value respectively, using the peak value in each line spread function curve as the maximum (see Figure 2-3).

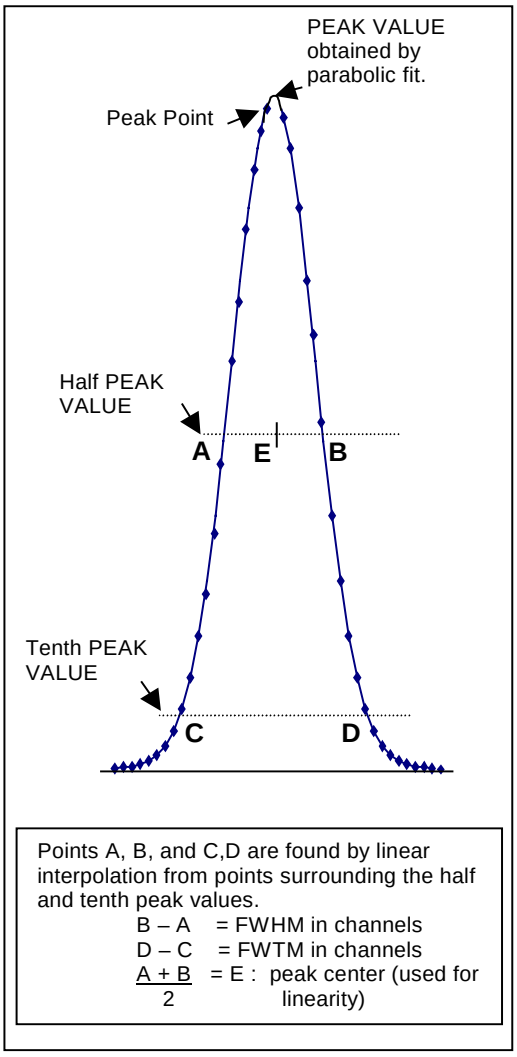

Figure 2–3
DETERMINATION OF FWHM AND FWTM

The distance between adjoining peaks shall be averaged over the entire UFOV for determining the millimeters per channel calibration factor. The calculated average distance shall correspond to the 30 mm distance between the slits. This calibration factor shall be used to convert the calculated values of FWHM and FWTM from units of channels to millimeters per channel. The value of FWHM and FWTM shall be calculated as the average of all such values for both axes, lying within the UFOV and CFOV respectively. The calculated values shall not be corrected for background or slit width.

2.1.5 Reporting

The calculated average FWHM and FWTM for a Tc-99m radionuclide shall be reported for both the UFOV and the CFOV, and given in millimeters with an accuracy of at least 0.1 mm.

Any other radionuclide employed shall be separately reported.

Measurements performed at any higher count rate than 20,000 cps shall also be separately reported.

2.2 INTRINSIC ENERGY RESOLUTION

Intrinsic energy resolution shall meet or exceed the specification, and shall be expressed as the ratio of the photopeak FWHM to the photopeak center energy, stated as a percentage.

2.2.1 Test Conditions

The radionuclide employed for this test shall be Tc-99m. A source holder which shields the source from walls, ceilings and personnel without restricting the gamma flux from the source to the camera (as shown in Figure 2-1) shall be employed. At least 2 mm of copper, as shown in Figure 2-1, shall be used. The

© Copyright 2001 by the National Electrical Manufacturers Association.

Copyright National Electrical Manufacturers Association
Provided by IHS under license with NEMA
No reproduction or networking permitted without license from IHS
Not for Resale

detector shall be masked with a 3 mm thick lead aperture to establish UFOV. The integral count rate shall not exceed 20,000 cps.

2.2.2 Test Equipment

The test equipment shall include means to digitize the energy spectrum with a channel depth of at least 10,000 counts, and a digital resolution of less than or equal to 0.05 FWHM of Tc-99m photopeak.

2.2.3 Measurement Procedure

The radionuclide shall be a Tc-99m point source centered at least five times the largest linear dimension of the UFOV above the detector. A second radionuclide, Co-57, shall be employed as a reference in order to determine the keV per channel calibration factor. The spectra for Tc-99m and Co-57 shall be separately stored. At least 10,000 counts shall be stored in the peak channel of each spectra measurement.

2.2.4 Calculations and Analysis

For each of the stored spectra, the photopeak location shall be determined as the average of the linearly interpolated half height channel values, calculated for each side of the photopeak (see Figure 2-3). The difference between the two photopeak locations in channel numbers should correspond to 18.4 keV, which is the difference between 140.5 keV of the Tc-99m photopeak center energy and the 122.1 keV of the Co-57 photopeak center energy. The intrinsic energy resolution shall be calculated from the Tc-99m stored spectrum. The FWHM in channel numbers shall be determined from the linearly interpolated half height channel values and calculated for each side of the Tc-99m photopeak. This value shall be multiplied by the calibration factor (keV per channel), divided by 140.5 keV corresponding to the Tc-99m photopeak center energy, and multiplied by 100 in order to obtain the value as a percentage.
If other radionuclides are used, the reference nuclide for calibration (keV/channel) shall be Cobalt-57.

2.2.5 Reporting

The calculated intrinsic energy resolution over the UFOV for a Tc-99m radionuclide shall be reported and expressed as a percentage.

Any other radionuclides employed shall be separately reported.

Measurements performed at any higher count rate than 20,000 cps shall also be separately reported.

2.3 INTRINSIC FLOOD FIELD UNIFORMITY

The intrinsic uniformity of the system shall be measured for the CFOV and UFOV. The measured values shall meet or exceed the specification.

The intrinsic uniformity is the response of the system without a collimator to a uniform flux of radiation from a point source. Two different uniformity parameters shall be determined: integral uniformity and differential uniformity. Integral uniformity is a measure of the maximum pixel count deviation in the CFOV or UFOV. Differential uniformity is a measure of the maximum deviation over a limited range designed to approximate the size of a photomultiplier tube.

2.3.1 Test Conditions

The radionuclide used to measure intrinsic uniformity is to be Tc-99m. Any other radionuclide used shall be reported separately. The count rate shall not exceed 20,000 counts per second through a symmetric 15 percent photopeak window. The status of uniformity corrections used shall be stated with the results.

© Copyright 2001 by the National Electrical Manufacturers Association.

Copyright National Electrical Manufacturers Association
Provided by IHS under license with NEMA
No reproduction or networking permitted without license from IHS Not for Resale

If other radionuclides are tested, the energy window settings recommended by the manufacturer shall be used.

2.3.2 Test Equipment

The test equipment required for this measurement consists of a source holder, a lead mask for the detector, and a computer or multi-channel analyzer. The source holder shall consist of a lead shield to prevent back and side scatter but be open at the front so that it does not restrict the gamma flux from the source to the detector. The source holder is shown in Figure 2-1. The lead mask for the detector is a lead aperture of at least the dimensions of UFOV.

2.3.3 Measurement Procedure

The detector shall be masked using a lead mask described above. The source in the source holder shall be placed on the central axis of the detector. The distance from the detector to the source shall be at least five times the largest dimension of the UFOV. The flood field image shall be stored in a matrix size which produces pixel sizes with a linear dimension of 6.4 mm ± 30%. The pixels shall be square.
A minimum of 10,000 counts shall be collected in the center pixel of the image.

2.3.4 Calculations and Analysis

Prior to performing the uniformity calculations, the pixels for inclusion shall be determined as described below.

First, any pixels at the edge of UFOV containing less than 75% of the mean counts per pixel in the CFOV shall be set to zero.

Second, those pixels which now have at least one of their four directly abutted neighbors containing zero counts, will be also set to zero. The remaining non-zero pixels are the pixels to be included in the analysis for the UFOV.

This step shall be performed only once. Any pixel that has at least 50% of its area inside the CFOV shall be included within the CFOV analysis.

2.3.4.1 Data Preparation

The flood field image, after removing the edge pixels, shall be smoothed once by convolution with a 9-point filter function of the following weightings:

1	2	1
2	4	2
1	2	1

The weighting factor for a pixel outside the analyzed area in the 9-point filter function shall be zero. The smoothed value shall be normalized by dividing by the sum of non-zero weighting factors.

2.3.4.2 Integral Uniformity

For pixels within each area (CFOV and UFOV), the maximum and the minimum values are to be found from the smoothed data. The difference between the maximum and the minimum is divided by the sum of these two values and multiplied by 100.

$$\textit{Integral Uniformity} = \pm 100 * ((Max - Min) / (Max + Min)) \qquad \text{Equation 2-1}$$

--`,,`-`-`,,`,,`,`,,`---

© Copyright 2001 by the National Electrical Manufacturers Association.

Copyright National Electrical Manufacturers Association
Provided by IHS under license with NEMA
No reproduction or networking permitted without license from IHS
Not for Resale

2.3.4.3 Differential Uniformity

For pixels within each area (FOV and UFOV) the largest difference between any two pixels within a set of 5 contiguous pixels in a row or column shall be calculated. The calculation shall be done for the X and the Y directions independently and the maximum change expressed as a percentage using the following:

$$Differential\ Uniformity = \pm 100\%\ ((Max - Min)/(Max + Min)) \qquad \text{Equation 2-2}$$

The filtered data are treated as a number of rows (X slices) and columns (Y slices). Each slice is processed by starting at the beginning pixel for the respective field of view**.** A set of five contiguous pixels is examined to find the maximum and minimum pixels. The differential uniformity is calculated using these values. The next set of five pixels is analyzed by stepping forward one pixel and again determining the percent uniformity. This is repeated until the outermost pixel is reached. The maximum differential uniformity is found in the slice. This process is then repeated for all of the slices.

2.3.5 Reporting

The results for Tc-99m are expressed as the percentage integral and differential uniformity for both of the CFOV and the UFOV. Other radionuclides shall be reported separately.

2.4 SYSTEM SPATIAL RESOLUTION WITHOUT SCATTER

The system spatial resolution without scatter shall be measured and expressed as FWHM and FWTM of the line spread function. The measured values shall meet or exceed the specification. Since the measurement depends on the collimator, as well as the detector, the measurement must be repeated for each collimator type.

2.4.1 Test Conditions

The radionuclides employed for these measurements shall be those for which the collimators were designed. The count rate shall not exceed 20,000 cps. For Tc-99m a symmetric 15 percent energy window shall be used. For other radionuclides the energy settings recommended by the manufacturer shall be used.

2.4.2 Test Equipment

The test equipment required for these measurements shall consist of two capillary tubes with an inside diameter of less than or equal to 1.0 mm and a length greater than 30 mm.

2.4.3 Measurement Procedure

The capillary tubes shall be filled with the desired radionuclide. One of these tubes shall be positioned 100 mm from the face of the system collimator and along the diameter corresponding to the axis of measurement, X or Y.

The digital sampling perpendicular to the tube shall be ≤ 0.1 FWHM and the digital sampling parallel to the tube shall be no greater than 30 millimeters. At least 10,000 counts shall be collected in the peak point of each line-spread function.

Measure the FWHM and FWTM in pixels of all the line spread functions that fall within the CFOV, first in the X direction and then in the Y direction, using the method of 2.1.4.

--`,,`,,`-`-`,,`,,`,`,,`---
© Copyright 2001 by the National Electrical Manufacturers Association.
Copyright National Electrical Manufacturers Association
Provided by IHS under license with NEMA
No reproduction or networking permitted without license from IHS
Not for Resale

A second measurement for each axis shall be performed with the second capillary tube also positioned 100 mm from the face of the collimator and 50 mm away from, and parallel to, the first tube. This measurement shall be used for calibration of the millimeters per pixel only.

2.4.4 Calculations and Analysis

Convert the FWHM and FWTM measurements from pixels to millimeters, using the measured millimeter per pixel calibration factor. Average the measurements in both the X and Y directions.

2.4.5 Reporting

System spatial resolution without scatter shall be reported as FWHM and FWTM within the CFOV. The radionuclide employed shall also be reported.

2.5 SYSTEM ALIGNMENT

For SPECT imaging systems the transaxial alignment of acquired images with the system's mechanical center of rotation is critical to the accurate SPECT reconstruction. Likewise, for multi-head SPECT imaging systems the axial alignment of images from the individual heads is crucial. Both alignments shall be measured and reported in millimeters.

Many systems incorporate automatic alignment corrections into the image acquisition process. These corrections may be enabled for these measurements with the stipulation that the automatic correction values must be obtained and applied in a manner consistent with the standard clinical procedure recommended by the manufacturer.

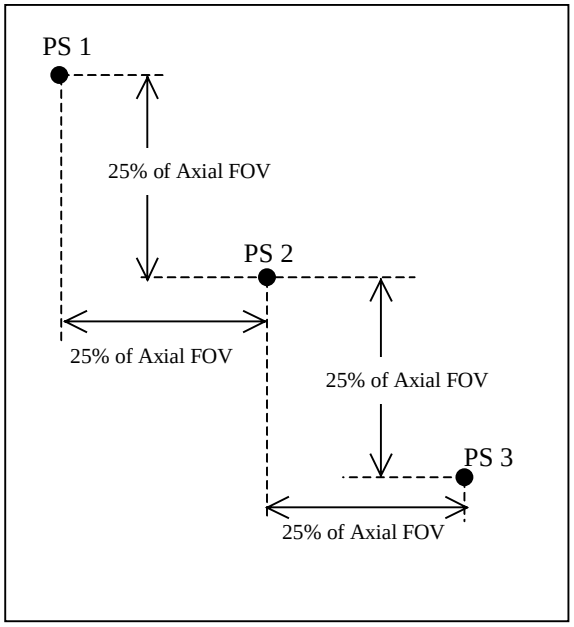

Figure 2-4
POINT SOURCES ARE POSITIONED IN A PLANE AND SPACED DIAGONALLY ACROSS THE FOV. PS #2 IS APPROXIMATELY CENTERED IN THE FOV AND THE OTHERS AT -25% AND +25% OF THE AXIAL FOV.

The axial and rotational deviation values shall meet or exceed the specification.

2.5.1 Test Conditions

The radionuclides employed for these measurements shall be Tc99m or Co57. The count rate shall not exceed 20,000 counts per second through a symmetric 15% energy window for Tc-99m or 20% for Co57.

2.5.2 Test Equipment

The test equipment required for this measurement consists of three point sources less than 2 mm in diameter. The activity of the point sources should vary by less than 10%. High-resolution collimators should be employed for the measurement.

2.5.3 Measurement Procedure

The point sources should be suspended in the camera FOV in a plane with the radial and axial positions shown in Figure 2-4. It is acceptable for the measurement to be made separately for each individual point source. The detectors should have a 20 cm radius of rotation. Automatic alignment and

© Copyright 2001 by the National Electrical Manufacturers Association.

Copyright National Electrical Manufacturers Association
Provided by IHS under license with NEMA
No reproduction or networking permitted without license from IHS
Not for Resale

uniformity corrections may be enabled as noted above. The pixel size should be set to less than 5 mm. Images shall be acquired at an even number of gantry angles greater than or equal to four distributed evenly from 0° to 360°. Each detector must include an image acquired at 0° and 180°. For each image the maximum pixel in each point source image should contain no fewer than 20,000 counts.

2.5.4 Calculations and Analysis

Sum each point source image over a 4-5 cm region of interest centered over the point source in the y direction creating a one-dimensional transverse profile of the Point Spread Function (PSF). Calculate the centroid of that profile (see section 3.2.4.1, equation 3-1) and assign its value to $X_{i,j,m}$, the transverse location of the i'th point of the j'th view for detector m. Likewise sum each ROI in the x direction creating a one dimensional axial profile of the PSF. Calculate the centroid of that profile and assign its value to $Y_{i,j,m}$.

For each point on the detector calculate the center of rotation by averaging $X_{i,j,m}$ over all views,

$$COR_{i,m} = \frac{1}{N_v}\sum_{j=1}^{N_v} X_{i,j,m} \qquad \text{Equation 2-3}$$

where N_v is the number of views. Define the COR error for each point and detector as,

$$\delta_{COR,i,m} = \text{abs}\left(COR_{i,m} - x_{cen}\right) \qquad \text{Equation 2-4}$$

where X_{cen} is the center of the image matrix in the x direction. For multi-headed systems calculate the COR deviation between each pairing of heads as,

$$\delta_{COR,i,m-n} = \text{abs}\left(COR_{i,m} - COR_{i,n}\right) \qquad \text{Equation 2-5}$$

In the axial direction for each point and detector, calculate the axial deviation of the image by comparing the y position of the images acquired with the detector at 0° and 180°,

$$\delta_{AXIAL,i,m} = \text{abs}(y_{i,0^\circ,m} - y_{i,180^\circ,m}). \qquad \text{Equation 2-6}$$

Calculate the relative axial misalignment of the heads as,

$$\delta_{AXIAL,i,m-n} = \frac{1}{N_v}\text{abs}\left(\sum_{j=1}^{N_v}\left(y_{i,j,m} - y_{i,j,n}\right)\right) \qquad \text{Equation 2-7}$$

for each pairing of heads.

2.5.5 Reporting

The following four values should be reported as upper bounds on the system.

$$\begin{aligned}\delta_{COR,1} &= \max(\delta_{COR,i,m}) \\ \delta_{COR,12} &= \max(\delta_{COR,i,m-n}) \\ \delta_{AXIAL,1} &= \max(\delta_{AXIAL,i,m}) \\ \delta_{AXIAL,12} &= \max(\delta_{AXIAL,i,m-n})\end{aligned} \qquad \text{Equations 2-8}$$

All values should be reported in millimeters.

© Copyright 2001 by the National Electrical Manufacturers Association.

Copyright National Electrical Manufacturers Association
Provided by IHS under license with NEMA
No reproduction or networking permitted without license from IHS
Not for Resale

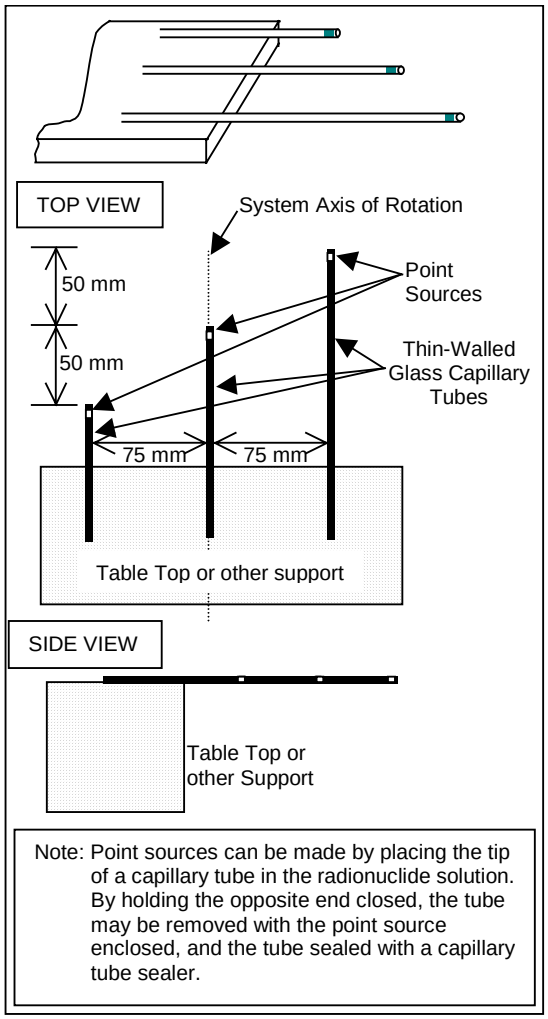

Figure 2-5
POSITIONS OF THE THREE CO-PLANAR POINT SOURCES FOR MEASURING SPECT RECONSTRUCTED SYSTEM RESOLUTION WITHOUT SCATTER

2.6 SPECT RECONSTRUCTED SPATIAL RESOLUTION WITHOUT SCATTER

The reconstructed spatial resolution of the system shall be measured at three specified points in air. FWHM values of resolution in the X, Y and Z direction for these three points shall be reported. The measured values shall meet or exceed the specification.

2.6.1 Test Conditions

Three Tc-99m or Co-57 point sources shall be used for these measurements. The count rate shall not exceed 20,000 cps through a symmetric 15 percent energy window(s).

No table shall come between the sources and the detector in any view.

2.6.2 Test Equipment

Three thin-walled glass capillary tubes or equivalent shall be used to form and position the point sources as defined in Figure 2-5. These three point sources shall be made as spherically symmetric as possible with a maximum dimension no larger than 2 mm.

2.6.3 Measurement Procedure

Position the plane of the three point sources parallel to the plane of the table, with the central point source positioned on the axis of rotation and centered in the field of view within ±5 mm. The radius of rotation for the circular orbit shall be 150 ± 5 mm. The data shall be collected and reconstructed in a matrix with an effective pixel size of less than or equal to 2.5 mm. At least 20,000 total counts must be acquired in each of at least 120 different projection angle images over 360° utilizing step and shoot mode.

2.6.4 Calculations and Analysis

One 130± 5 mm thick transverse slice, centered on the central point source, shall be reconstructed from raw projection data using the filtered back projection technique with a ramp filter. If, in addition, other reconstruction techniques are used, they shall be specified. This transverse slice will contain an image of the three point sources.

Likewise, one 180 ± 5 mm thick sagittal slice, centered on the central point source, shall be reconstructed. This slice will also contain an image of the three point sources.

Likewise, one 30 ± 5 mm thick coronal slice shall be reconstructed, with the slice thickness centered on the plane of the three point sources.

© Copyright 2001 by the National Electrical Manufacturers Association.

Copyright National Electrical Manufacturers Association
Provided by IHS under license with NEMA
No reproduction or networking permitted without license from IHS
Not for Resale

2.6.4.1 Analysis of Point Images

Each of these nine point source images contained in the three slices shall be analyzed individually within a square region of interest (ROI) centered on the maximum count pixel associated with this point. The dimension of the square ROI must be at least four times the anticipated FWHM to be analyzed. Each point image shall be integrated in the Y direction to determine the X direction point spread function and integrated in the X direction to determine the Y direction point spread function.

2.6.4.2 Full Width at Half Maximum (FWHM) Calculations

The FWHM in X and Y for each of the above nine point images shall be calculated according to the method described in Section 2.1.4. Record these measured values in worksheet 2-1 for the central point and on worksheet 2-2 for the peripheral points.

2.6.5 Reporting

Five FWHM average values shall be reported. Two FWHM values are reported for the central point and three FWHM values are reported for the peripheral points:

Central Transaxial (X + Y)/2: _____mm
Central Axial (Z): _____mm
Peripheral Radial (X): _____mm
Peripheral Tangential (Y): _____mm
Peripheral Axial (Z): _____mm

Worksheet 2-1 : Central Point Measurements

Transverse Slice	**X =**	**Y =**	
Sagittal Slice		**Y =**	**Z =**
Coronal Slice	**X =**		**Z =**
Average Values	**X =**	**Y =**	**Z =**
Transaxial Average	**(X + Y) / 2**		

Worksheet 2-2 : Peripheral Point Measurements

Point 1			
Transverse Slice	**X =**	**Y =**	
Sagittal Slice		**Y =**	**Z =**
Coronal Slice	**X =**		**Z =**
Point 2			
Transverse Slice	**X =**	**Y =**	
Sagittal Slice		**Y =**	**Z =**
Coronal Slice	**X =**		**Z =**
Average Values	**X =**	**Y =**	**Z =**

© Copyright 2001 by the National Electrical Manufacturers Association.

Copyright National Electrical Manufacturers Association
Provided by IHS under license with NEMA
No reproduction or networking permitted without license from IHS
Not for Resale

2.7 WHOLEBODY SYSTEM SPATIAL RESOLUTION WITHOUT SCATTER

System spatial resolution without scatter shall be measured parallel and perpendicular to the direction of motion, and expressed as full width at half maximum (FWTM) and full width at tenth maximum (FWTM) of the line spread function. The measured values shall meet or exceed the specification.

2.7.1 Test Conditions

The radionuclide to be employed for this measurement shall be Tc-99m. Any other radionuclide(s) employed shall be separately reported. The activity of the source shall be adjusted to yield a count rate between 10,000 and 20,000 cps, through a 15 percent energy window, with two capillary tubes in the detector field of view. The camera shall be equipped with a collimator.

2.7.2 Test Equipment

The sources shall consist of two capillary tubes, each having an inside diameter less than or equal to 1.0 mm and a length of at least 200 mm. Sources shall be placed on the whole body scanning table, parallel to the plane of the detector.

2.7.2.1 Resolution Parallel to the Direction of Motion

One capillary tube shall be placed at the center of the scanned field of view, perpendicular to the direction of motion to within 1 mm. The second source shall be placed parallel to the first one, at a distance of 100 mm, as shown in Figure 2-6a.

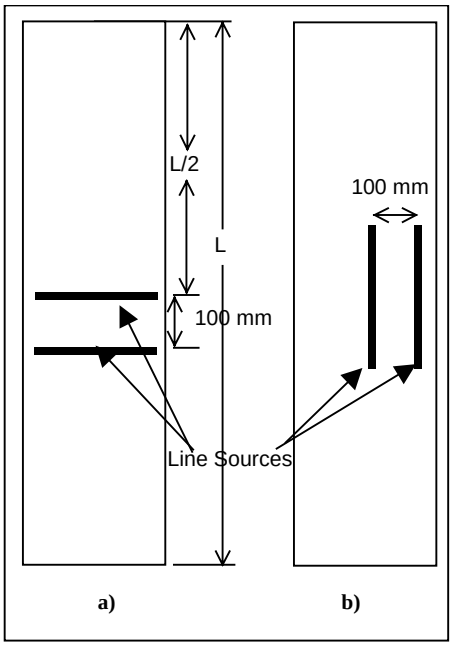

Figure 2-6
SOURCE POSITION FOR WHOLEBODY RESOLUTION MEASUREMENTS (not to scale)

2.7.2.2 Resolution Perpendicular to the Direction of Motion

One capillary tube shall be placed at the center of the scanned field of view, parallel to the direction of motion to within 1 mm. The second source shall be placed parallel to the first one, at a distance of 100 mm, as shown in Figure 2-6b.

2.7.3 Measurement Procedure

a. Scan speed–The scan speed shall be in the range recommended for clinical use.

b. Camera position–Scans shall be performed with the detector both above and below the table for the two source orientations as described in Section 2.7.2. The camera shall be positioned at a distance of 100 millimeters from the sources to the face of the collimator.

c. Digital sampling–The digital sampling perpendicular to the tubes shall be no less than 0.25 of the FWHM of the system resolution of the collimator being used. The digital resolution parallel to the tubes shall be no less than 25 mm and no more than 30 mm.

2.7.4 Calculation and Analysis

The average millimeters/pixel shall be calculated from the known line spacing. This calculation shall be done separately, parallel and perpendicular to the direction of the motion. The FWHM and FWTM shall be calculated in each segment of the central capillary tube, using the method of Section 2.1.4. The values of

© Copyright 2001 by the National Electrical Manufacturers Association.

Copyright National Electrical Manufacturers Association
Provided by IHS under license with NEMA
No reproduction or networking permitted without license from IHS
Not for Resale

the FWHM and FWTM shall be averaged separately for the tubes parallel and perpendicular to the direction of motion.

2.7.5 Reporting

Average FWHM and FWTM shall be reported. The reported values shall be the average of the measurements acquired above and below the table. Parallel and perpendicular resolution shall be reported separately.

The collimator and scan speed used in performing the measurement shall be reported.

2.7.6 Rationale

The performance of whole body scanning systems depends not only on the intrinsic and system performance of the camera, but also on the performance and alignment of the scanning mechanism. The tests are aimed at measuring the performance of these aspects of the system.

Most problems associated with whole body scanning systems will affect the spatial resolution. Resolutions parallel and perpendicular to the direction of motion are reported separately, as they are controlled by different mechanisms. The resolution parallel to the direction of motion, measured with line sources perpendicular to that direction, is affected by the motion control, camera scale calibration and collimator quality. The perpendicular resolution, measured with line sources parallel to the direction of motion, is affected primarily by the mechanical alignment of the camera and the table.

© Copyright 2001 by the National Electrical Manufacturers Association.

Copyright National Electrical Manufacturers Association
Provided by IHS under license with NEMA
No reproduction or networking permitted without license from IHS
Not for Resale

Section 3
SECONDARY TESTS OF SINGLE CRYSTAL GAMMA CAMERA SYSTEMS

3.1 INTRINSIC SPATIAL LINEARITY

Intrinsic spatial differential and absolute linearity shall meet or exceed the specifications. Differential linearity shall be expressed in millimeters as the standard deviation of the measured peak locations from a best fit line. Absolute linearity shall be expressed as the maximum displacement of any peak from the best fit of a two dimensional grid.

3.1.1 Test Conditions

The radionuclide employed for this test shall be Tc-99m. A source holder, which shields the source from walls, ceilings, and personnel without restricting the photon flux from the source to the camera (as shown in Figure 2-1), shall be employed. One or more copper plates, as shown in Figure 2–1, may be used to adjust the count rate. The energy window for Tc-99m shall be 15 percent centered on the photopeak. The count rate shall not exceed 20,000 cps through the energy window.

If other radionuclides are used, the energy window should be set according to the manufacturer's recommendations.

3.1.2 Test Equipment

The test pattern shall consist of a lead mask in closest possible proximity to the crystal covering the entire UFOV with 1 millimeter wide parallel slits. Adjacent slit centers shall be 30 mm one from the other (refer to Figure 2-2 which shows the geometry for a rectangular field of view camera). The thickness of the mask shall be 3 millimeters for Tc-99m or Co-57.

3.1.3 Measurement Procedure

The lead mask with the parallel slits shall be positioned on the detector with the center slit centered on the detector. The center slit shall be perpendicular to the axis of measurement and aligned to within ±1 millimeter at the edge of the UFOV.

The radionuclide shall be a point source centered at least five times the largest linear dimension of the UFOV above the lead mask with the parallel slits.

The digital resolution perpendicular to the slits shall be less than or equal to 0.1 FWHM.

The data shall be integrated parallel to the direction of the slits to form line-spread functions. The digital resolution parallel to the direction of the slits shall be less than or equal to 30 mm. At least 1,000 counts shall be collected in the peak channel of each line spread function measurement after integration parallel to the direction of the slits.

Two sets of data shall be acquired—one with the slits in the X direction and one in the Y direction.

3.1.4 Calculations and Analysis

If the data are acquired in a two dimensional matrix, the data shall be summed parallel to the direction of the slits to form line spread functions of width 30 mm or less.

The distances between the peaks in each of the line spread functions shall be determined as the average of the interpolated half maximum locations on both sides of each peak. The half maximum locations shall

© Copyright 2001 by the National Electrical Manufacturers Association.

Copyright National Electrical Manufacturers Association
Provided by IHS under license with NEMA
No reproduction or networking permitted without license from IHS
Not for Resale

be determined by linear interpolations from the nearest two neighboring points of the half peak value as described in Section 2.1.4 (see Figure 2-3). The locations of the peaks shall be calculated for each subsequent line spread function. This will generate a two dimensional array of peak locations. One dimension will be along the slits and one will be perpendicular to the slits. Note that there will be two two-dimensional arrays, one from data acquired with slits in the X direction and the other with slits in the Y direction.

The value of intrinsic spatial differential linearity (in pixels) shall be calculated as the standard deviation of the locations of the peaks in each slit. The standard deviations for the slits in the X and Y directions shall be averaged together. Separate values shall be calculated for the UFOV and for the CFOV.

Intrinsic spatial absolute linearity shall be determined by fitting a two dimensional orthogonal grid of equally spaced points to the data using a least squares minimization technique. Different grids shall be fitted to the UFOV and to the CFOV data. There shall also be separate grids fitted for data acquired with the slits in the X and in the Y directions. The maximum displacement for each set shall be the largest difference between the data and the grid fit (in pixels) in the X or the Y direction.

The millimeters per channel calibration factor shall be calculated as described in Section 2.1.4. This factor shall be used to convert the differential linearity and absolute linearity to millimeters.

3.1.5 Reporting

The intrinsic spatial differential linearity shall be reported for both the UFOV and for the CFOV. The values shall be given in millimeters with an accuracy of at least 0.1 mm.

The intrinsic spatial absolute linearity shall be reported for both the UFOV and for the CFOV. The values shall be given in millimeters with an accuracy of at least 0.1 mm.

3.2 MULTIPLE WINDOW SPATIAL REGISTRATION

Multiple window spatial registration is a measure of the camera's ability to accurately position photons of different energies when imaged through different photopeak energy windows. Measurements shall be made at nine specified points on the entrance plane of the scintillation camera. The measured values of multiple window spatial registration shall meet or exceed the specification.

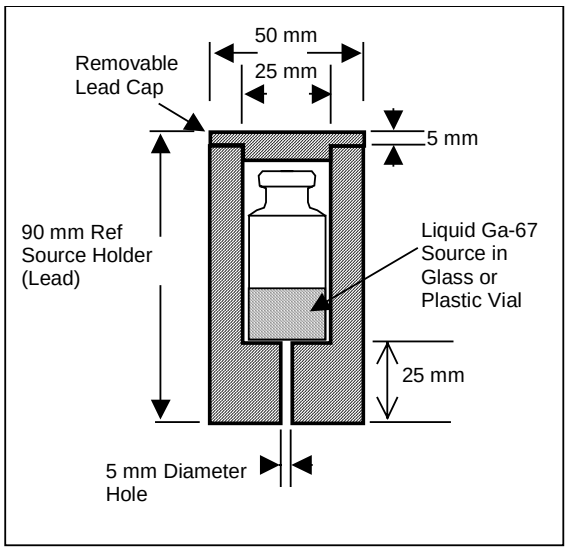

Figure 3-1
CYLINDRICAL SOURCE HOLDER for MULTIPLE WINDOW SPATIAL REGISTRATION MEASUREMENT SHOWING LIQUID Ga-67 SOURCE INSIDE

3.2.1 Test Conditions

The radionuclide used to measure multiple window spatial registration shall be Ga-67. The energy window settings for each of the three Gallium peaks shall be set as recommended by the manufacturer. The count rate shall not exceed 10,000 counts per second through each photopeak energy window.

3.2.2 Test Equipment

A lead-lined source holder shall collimate the Ga-67 source through a cylindrical tunnel in the lead. This tunnel shall be 5 mm in diameter and 25 mm in length. See Figure 3-1 for a sketch of the Ga-67 source inside such a source holder.

© Copyright 2001 by the National Electrical Manufacturers Association.

Copyright National Electrical Manufacturers Association
Provided by IHS under license with NEMA
No reproduction or networking permitted without license from IHS
Not for Resale

3.2.3 Measurement Procedure

Images shall be acquired using the above described collimated Ga-67 source (see Figure 3-1) located at nine specific points on the entrance surface of the uncollimated camera. These nine points shall be the central point, four points on the X-axis and four points on the Y-axis. The off central points shall be located 0.4 times and 0.8 times the distance from the central point to the edge of the UFOV of the camera along the respective axes. Separate images of the collimated Ga-67 source shall be acquired through separate energy windows of the Ga-67 photopeaks at each of these image locations. These images shall be acquired with a pixel size of not more than 2.5 mm. For cameras with two energy windows, two images shall be acquired at each point, one using the 93 keV photopeak and the second using the 300 keV photopeak. For cameras with three or more energy windows, the 184 keV photopeak shall also be imaged. At least 1,000 counts shall be acquired in the peak pixel of each photopeak image.

3.2.4 Calculations and Analysis

The displacement of the count centroids from each other in the X and Y directions shall be determined for each measurement point's photopeak images. A square region of interest (ROI) centered on the maximum count pixel associated with each photopeak image shall be used to analyze the individual photopeak images.

The pixel dimensions of the square ROI shall be approximately four times the FWHM of the image count profile to be analyzed. Each image shall be integrated in the Y direction to determine the X count profile and integrated in the X direction to determine the Y count profile. The centroid of counts in the X and Y directions shall be determined for each image from that direction's count profile by the method described below. The maximum difference in position of the centroid of counts acquired from each photopeak shall be determined. The largest pixel displacement shall then be converted to millimeters using an accurate millimeter per pixel calibration from Section 2.1.4.

3.2.4.1 Method for Centroid of Counts Determination

The center of counts in the X and Y directions for each of the photopeak count profiles shall be determined as follows. Find the maximum count pixel in the integrated X or Y profile and calculate the centroid of counts using the following formula:

$$L_j = \sum_{i=1}^{n} (X_i \times C_i) / \sum_{i=1}^{n} C_i \qquad \text{Equation 3-1}$$

Where:

L_j = calculated centroid location for energy window j where j can equal 1,2 or 3.

X_i = X or Y count profile pixel at the ith location

C_i = counts at the X_i or Y_i location.

$\sum_{i=1}^{n}$ = is the sum over an odd number of count profile pixels centered on the maximum count profile pixel. The exact odd number of pixels will depend on the FWHM of the count profile and the pixel size. The minimum number of pixels in this sum shall include both the left and right half maximum counts.

The displacement D_{ij} between energy windows i and j is then:

$$D_{ij} = | L_i - L_j | \qquad \text{Equation 3-2}$$

Where i = 1, 2 or 3; j = 1, 2 or 3. The maximum displacement is simply the largest D_{ij}.

© Copyright 2001 by the National Electrical Manufacturers Association.

Copyright National Electrical Manufacturers Association
Provided by IHS under license with NEMA
No reproduction or networking permitted without license from IHS
Not for Resale

3.2.5 Reporting

The multiple window spatial registration shall be reported as the maximum difference in spatial positions for different energy windows in either the X or Y direction of the photopeak count centroids for the nine points measured. The values shall be reported in millimeters to the nearest tenth of a millimeter

3.3 INTRINSIC COUNT RATE PERFORMANCE IN AIR

The decaying source method shall be used to determine count rate performance. Two parameters shall be measured and reported: observed count rate for a 20% count loss and a maximum count rate. Both parameters shall be measured without induced scatter. The curve of observed versus input count rates shall be provided.

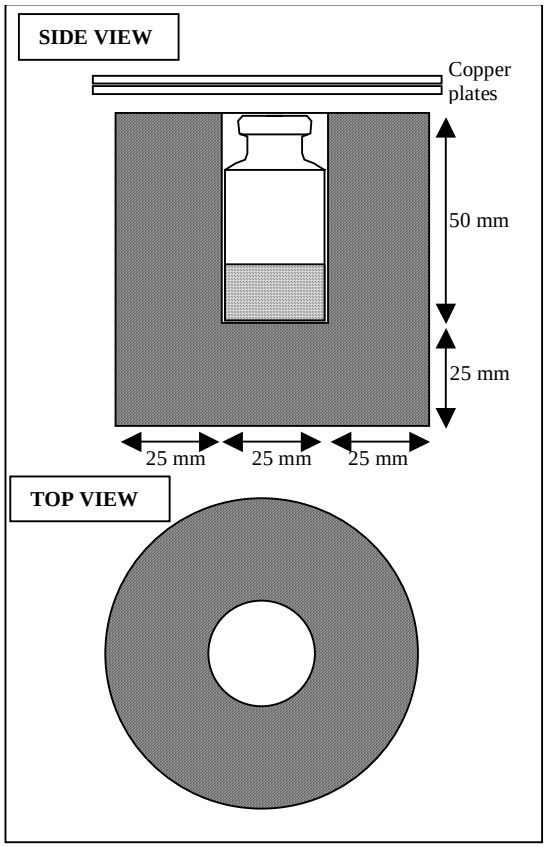

Figure 3-2
SOURCE HOLDER FOR COUNT RATE MEASUREMENTS

Specifications of Intrinsic Count Rate Performance in Air shall be typical of the model (see section 1.3.4).

3.3.1 Test Conditions

The radionuclide employed for the test shall be Tc-99m. Any other radionuclide(s) employed shall be separately reported.

The energy window for Tc-99m shall be 15 percent centered on the photopeak. For other radionuclides the energy settings recommended the manufacturer shall be used. Peaking shall be performed at a low count rate and shall not be manually readjusted during the test. The camera shall be tested in normal mode as described in Section 1.3.3.

3.3.2 Test Equipment

A camera under test shall have the camera crystal masked to the UFOV.

The source shall be placed within a lead container as in Figure 3-2. The container shall be arranged as in Figure 2-1 except that the distance from the source to the container may be less than 5 times the UFOV. The open side (facing the camera crystal) shall be covered by 6 mm of copper plates. The source intensity shall be such that it produces an input count rate which is larger than the count rate required to cause foldover in the observed count rate.

3.3.3 Measurement Procedure

Determine the background count, N_{bkg} and the background count rate $R_{Bkg} = N_{bkg}/\Delta t_{bkg}$. The suggested time for this determination is 10 minutes.

The lead holder with the source shall be placed in a suitable position in front of the detector. The source holder shall be positioned so that the collimated cone of radiation is centered within the UFOV and that the irradiated area of the crystal extends fully across the smaller dimension of the UFOV. Care must be taken to minimize scatter.

© Copyright 2001 by the National Electrical Manufacturers Association.

Copyright National Electrical Manufacturers Association
Provided by IHS under license with NEMA
No reproduction or networking permitted without license from IHS
Not for Resale

The start (t_i) and elapsed time (Δt_i) of the measurement shall be recorded for each data point, Ct_i, where (i) is the number of the data point and Ct_i is the number of counts recorded

The time shall be measured relative to the start of acquisition time of the measurement of the first data point. For each data point (Ct_i), at least 100,000 counts shall be collected. Data should be acquired for 10 sec. or 100,000 counts, which ever time is longer.

The measurement should be performed so that the points are taken as soon as the observed count rate drops by 10,000 cps below the previous measured point. The last (n-th) point taken should be measured when the observed count rate drops below 4,000 cps.

3.3.4 Calculations and Analysis

Each data point is first corrected for background:

$$C_i = Ct_i - R_{bkg} \cdot \Delta t_i \qquad \text{Equation 3-3}$$

The observed count rate (OCR_i) shall be determined for each data point according to the following formula:

$$OCR_i = \frac{C_i \ln(2)}{T_{half} \cdot \{1 - \exp[(-\Delta t_i) \cdot \ln(2) / T_{half}]\}} \qquad \text{Equation 3-4}$$

where T_{half} is the half-life of Tc-99m in the same units as t_i and Δt_i (21672 seconds). Equation 3-4 corrects for decay of the source during the i'th measurement.

The input count rate (ICR_i) for each data point shall be calculated according to the following formula:

$$ICR_i = OCR_n \cdot \exp\left\{\frac{(t_n - t_i) \cdot \ln(2)}{T_{half}}\right\} \qquad \text{Equation 3-5}$$

The observed count rate at 20% loss shall be determined by linear interpolation between the two closest points to the equation:

$$L_i = 0.8 \times ICR_i \qquad \text{Equation 3-6}$$

3.3.5 Explanation

The purpose of Equation 3-4 is to scale the measurements (calculate the observed count rate corrected for background) to the time at the beginning of the measurement of each data point t_i.

When the measurement is performed at high count rates, the duration of the measurement has little or no effect. That is to say that Tc-99m will decay very little during a few seconds of the measurement at count rates of, e.g. 150,000 cps. However, when the count rate approaches 4,000 cps and if 100,000 counts are collected, the measurement will take more than 25 seconds, during which time Tc-99m will decay by approximately 0.1% .

Equation 3-3 takes care of this problem by subtracting the appropriate amount of background counts from the number of counts collected and Equation 3-4 scales this number according to the exponential decay law. The resulting observed count rate points are now scaled to the time at the beginning of the measurement of each data point; i.e. OCR_i is the number that would be obtained if we could instantaneously measure only the counts coming from the source (no background).

Equation 3-5 simply extrapolates the measurement taken at the last point (at a very low count rate) to the points at high count rates. This is reasonable because the dead time at the count rates below 4,000 cps is

© Copyright 2001 by the National Electrical Manufacturers Association.

Copyright National Electrical Manufacturers Association
Provided by IHS under license with NEMA
No reproduction or networking permitted without license from IHS
Not for Resale

only a fraction of a percent. This relative error is propagated through extrapolation, but it is not amplified (i.e. it will always retain the same percentage).

The largest effect, by far, is caused by the background measurement. Effort should be maintained to minimize variations in background throughout the test.

3.3.6 Reporting

Typical values (see section 1.3.4) of maximum observed count rate, observed count rate at 20% loss, and the curve of observed count rate vs. the input count rate shall be reported.

3.3.7 Technical Note

This test is very time-consuming, taking approximately two days to complete. An alternative method is to use carefully calibrated copper sheets as discussed in the following articles:

1. "A New Approach to NEMA Scintillation Camera Count Rate Curve Determination," by E.M. Geldenhuys et al, JNM Vol. 29, No. 4, April 1988 p. 538.

2. "*Spectral Changes Affect Intrinsic Count Rate Tests*," by Stephen I. Breen / Trevor D. Cradduck, JNM Vol. 31, No. 12, December 1990, p. 2074.

Traceability of this method to the above standard must be demonstrated.

3.4 SYSTEM COUNT RATE PERFORMANCE WITH SCATTER

The decaying source method shall be used to determine count rate performance with scatter. Two parameters shall be measured and reported: observed count rate for a 20% count loss and a maximum count rate. Both parameters shall be measured with induced scatter. The curve of observed versus input count rates shall be provided.

Specifications of Intrinsic Count Rate Performance with scatter shall be typical of the model (see section 1.3.4).

3.4.1 Test Conditions

The radionuclide employed for the test shall be Tc-99m. Any other radionuclide(s) employed shall be separately reported.

The energy window for Tc-99m shall be 15 percent centered on the photopeak. For other radionuclides the energy window used shall be that recommended by the manufacture. Peaking shall be performed at a low count rate and shall not be manually readjusted during the test. The camera shall be tested in “normal” mode as described Section 1.3.3.

3.4.2 Test Equipment

A camera under test shall have a low energy collimator mounted. The source shall be in a water solution filling a disk container as shown on Figure 3-3c. The source intensity shall be such that it produces an input count rate which is larger than the count rate required to cause foldover in the observed count rate.

The source shall be placed within a plastic cylindrical phantom with dimensions shown in Figure 3-3. (The phantom may be all acrylic, or may be water filled. The well above the source holder is also filled with acrylic or water.)

© Copyright 2001 by the National Electrical Manufacturers Association.

Copyright National Electrical Manufacturers Association
Provided by IHS under license with NEMA
No reproduction or networking permitted without license from IHS Not for Resale

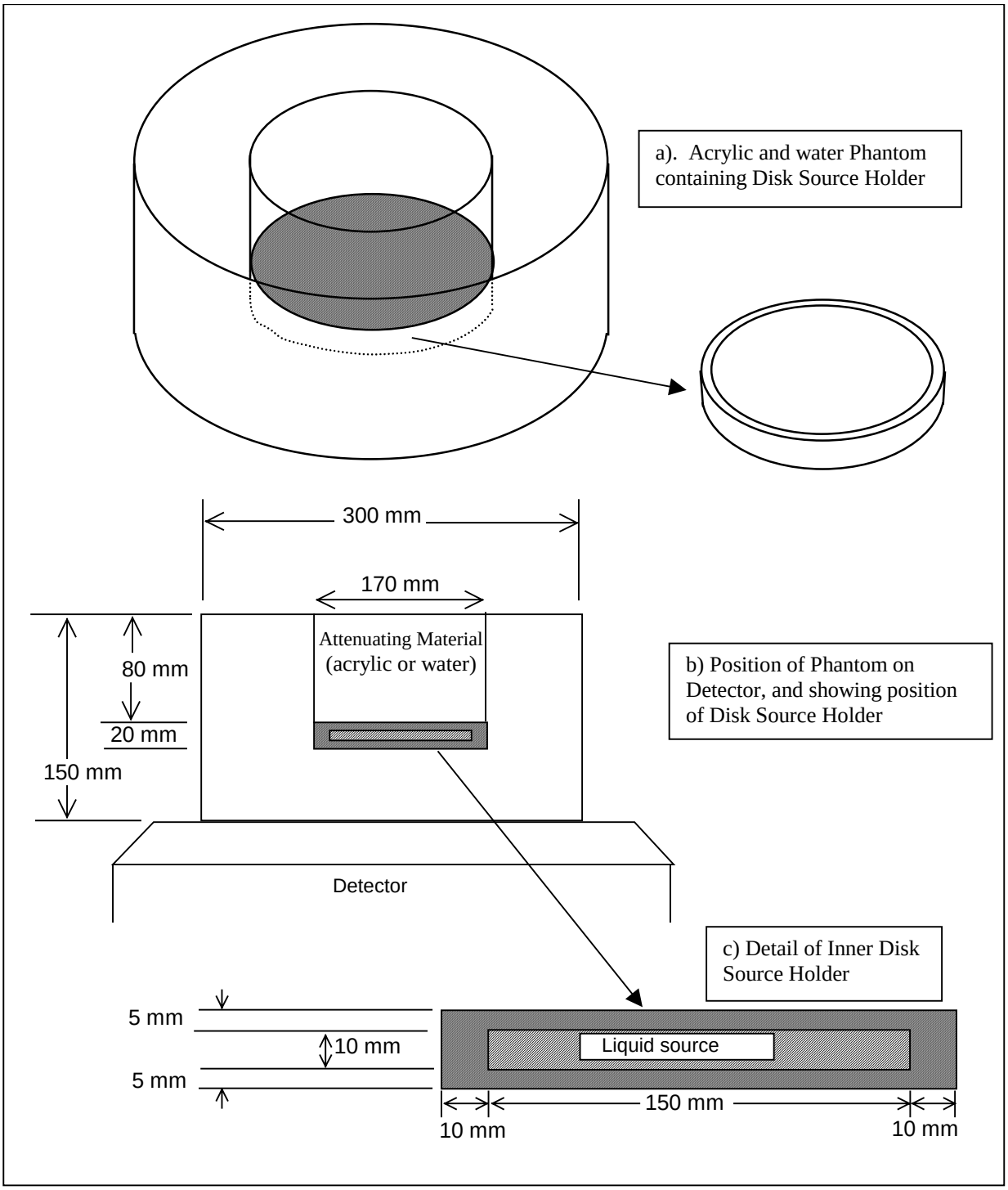

Figure 3-3
PHANTOM FOR MEASURING COUNT RATE PERFORMANCE IN SCATTER

© Copyright 2001 by the National Electrical Manufacturers Association.

Copyright National Electrical Manufacturers Association
Provided by IHS under license with NEMA
No reproduction or networking permitted without license from IHS
Not for Resale

3.4.3 Measurement Procedure

The detector shall be positioned to view the 50 mm thick plastic base of the phantom. The distance between the phantom and the face of the collimator shall not be greater than 20 mm. The phantom shall be centered within the UFOV.

Prior to the beginning of the measurement, the background count rate, N_{bkg} shall be determined. The start (t_i) and elapsed time (Δt_i) of the measurement shall be recorded for each data point, where (i) is the number of the data point.

The time shall be measured relative to the start of acquisition time of the measurement of the first data point. For each data point (Ci), at least 100,000 counts shall be collected. Data should be acquired for 10 sec. or 100,000 counts, whichever time is longer.

The measurement should be performed so that the points are taken as soon as the observed count rate drops by 10,000 cps below the previous measured point. The last (n-th) point taken should be measured when an observed count rate drops below 4,000 cps.

3.4.4 Calculations and Analysis

The observed count rate (OCRi) shall be determined for each data point according to the formula given in section 3.3.4 (equations 3-3 to 3-6).

3.4.5 Reporting

Typical (see section 1.3.4) maximum observed count rate, observed count rate at 20% loss, and the curve of observed count rate with scatter versus the input count rate shall be reported.

3.5 INTRINSIC SPATIAL RESOLUTION AT 75,000 COUNTS PER SECOND

Intrinsic spatial resolution shall be measured at 75,000 counts per second following the procedures and reporting requirements described in Section 2.1. Measured values of average FWHM and average FWTM shall be reported. The measured values shall meet or exceed the specification.

3.6 INTRINSIC FLOOD FIELD UNIFORMITY AT 75,000 COUNTS PER SECOND

Intrinsic flood field uniformity shall be measured at 75,000 counts per second. Integral and Differential Uniformity for both CFOV and UFOV shall be calculated following the procedures and reporting of Section 2.3. The measured values shall meet or exceed the specification.

3.7 SYSTEM SPATIAL RESOLUTION WITH SCATTER

The system spatial resolution with scatter shall be measured and expressed as FWHM and FWTM of the line spread function. The measured values must meet or exceed the specification. Since the measurement depends on the collimator, as well as the detector, the measurement must be made with each collimator type.

3.7.1 Test Conditions

The radionuclides employed for these measurements shall be those for which the collimators were designed. The count rate shall not exceed 20,000 cps through a symmetric 15 percent energy window or windows. For other radionuclides the energy settings recommended by the manufacturer shall be used.

© Copyright 2001 by the National Electrical Manufacturers Association.

Copyright National Electrical Manufacturers Association
Provided by IHS under license with NEMA
No reproduction or networking permitted without license from IHS
Not for Resale

3.7.2 Test Equipment

The test equipment required for these measurements shall consist of two capillary tubes with an inside diameter of less than or equal to 1.0 mm and a length greater than 30 mm. Also required are acrylic scattering blocks, the size of the UFOV of the system to be measured and 100 and 50 mm thick. The required acrylic scattering thickness may be assembled from thinner pieces but still must cover the entire UFOV.

3.7.3 Measurement Procedure

The measurements of system resolution are identical to those described in section 2-4, except that the 100 mm space between the source and the detector is filled with scattering material, and there is an additional 50 mm of scattering material behind the source.

The capillary tubes shall be filled with the desired radionuclide. 100 mm of acrylic scattering block shall be positioned immediately in front of the collimator and one of the capillary tubes shall be positioned as close as possible to the block. The other 50 mm of scattering shall be positioned on the other side of the capillary tube.

The digital sampling resolution perpendicular to the tube shall be ≤ 0.1 FWHM and the digital sampling parallel to the tube shall be no greater than 30 millimeters. At least 10,000 counts shall be collected in the peak point of each line-spread function.

Measure the FWHM and FWTM in pixels of all the line spread functions that fall within the CFOV, first in the X direction and then in the Y direction, using the method described in section 2-1.

A second measurement for each axis shall be performed with the second capillary tube also positioned 100 mm from the face of the collimator and 50 mm away from, and parallel to, the first tube. This measurement shall be used for calibration of the millimeters per pixel only. If the test described in section 2-4 is performed at the same time, then the pixel calibration obtained for that test may be used here.

3.7.4 Calculations and Analysis

Convert the FWHM and FWTM measurements from pixels to millimeters, using the measured millimeter per pixel calibration factor. Average the measurements in both the X and Y directions together.

3.7.5 Reporting

System spatial resolution without scatter shall be reported as FWHM and FWTM within the CFOV. The collimator and the radionuclide employed shall be also reported.

3.8 SYSTEM PLANAR SENSITIVITY AND PENETRATION

The system planar sensitivity is the ratio of collimated counts detected in one acquisition plane to the activity of a specific planar source placed parallel to that plane. However, detected counts may also arise from radiation which penetrates or scatters off the septa of the collimator (Ref. 3). This penetrated or scattered radiation degrades the overall image quality and thus should be considered separately from the sensitivity due to properly collimated counts. Both system planar sensitivity and penetration depend on the collimator type, window width, gamma energy, source configuration and system factors. Therefore, the configuration of these system variables for the purpose of this measurement should match those employed in clinical settings unless explicitly noted otherwise.

The planar sensitivity and penetration fraction of the system shall be measured for each collimator type with the appropriate isotopes and reported in (counts/sec)/MBq.

© Copyright 2001 by the National Electrical Manufacturers Association.

Copyright National Electrical Manufacturers Association
Provided by IHS under license with NEMA
No reproduction or networking permitted without license from IHS
Not for Resale

This measurement relies on the accuracy of the calibration of the radionuclide activity, and therefore the specification shall be for typical devices of this model (see section 1.3.4).

3.8.1 Test Conditions

The radionuclides employed for these measurements shall be those for which the collimators are designed. The count rate shall be less than 30,000 counts per second through a symmetric 15% energy window (for Tc-99m). If other radionuclides are used, the energy settings used should be those recommended by the manufacturer.

3.8.2 Test Equipment

The test equipment required for this measurement consists of a 1 to 5 cc plastic syringe, a 30 to 50 cc plastic syringe, a calibrated dose calibrator, and a 100 mm diameter flat plastic dish (see Figure 3-3).

3.8.3 Measurement Procedure

The source activity inside the plastic syringe, A_{SR}, shall be accurately measured using a dose calibrator. This source shall then be dispersed from the syringe into water in a 150±5 mm diameter flat plastic phantom (shown in Figure 3-3, the inner phantom).

The residual activity remaining in the syringe, A_{Res} shall be promptly measured in the dose calibrator and the reading subtracted from the original reading to obtain the amount of activity in the phantom, $A_{Cal} = A_{SR} – A_{Res}$, at the time of preparation.

Calibration methods shall be those set forth in the NRC Regulatory Guide 10.8, or alternatively NIST traceable calibration sources shall be used as references with appropriate half-life corrections. The measurements of syringe activity should be reproducible to better than 5%. All measurement times should be recorded to at least the nearest minute, or 1% the half-life of the radionuclide, whichever is more precise. A consistent clock should be used for all time measurements.

The prepared phantom shall be placed near the center of the field of view and in a plane such that the bottom inside face of the phantom is 10±1 mm from the face of the detector. It may be helpful to determine this distance using a 10 mm spacer and an empty phantom. No scatter material shall be present. It is critical that the base of the phantom is level such that the activity is distributed evenly.

Acquire at least 4 million counts with the imaging system. Record the start time of the acquisition to the precision stated above. The duration of the acquisition should be measured with a precision of better than 1%.

Repeat this measurement for the same number of counts with the bottom inside face of the phantom 20±1, 50±1, 100±1, 150±1, 200±1, 250±1, 300±1, 350±1 and 400±1 mm from the face of the collimator. The phantom should be near the center of the field-of-view and in the plane of the detector for all measurements.

3.8.4 Calculations and Analysis

For each acquisition sum the number of counts in a circular ROI which is 60% of the diameter of the phantom and centered over the region of activity. Include pixels with their centers within the ROI. Determine the decay-corrected count rate for the i’th acquisition as,

© Copyright 2001 by the National Electrical Manufacturers Association.

Copyright National Electrical Manufacturers Association
Provided by IHS under license with NEMA
No reproduction or networking permitted without license from IHS Not for Resale

$$R_i = C_i \exp\left(\frac{(T_i - T_{cal})}{T_{half}} \ln 2\right) \times \left(\frac{\ln 2}{T_{half}}\right) \left(1 - \exp\left(-\frac{T_{acq,i}}{T_{half}} \ln 2\right)\right)^{-1} \quad \text{Equation 3-7}$$

where,

a) R_i decay-corrected count rate,
b) C_i summed counts over the circular roi in the i'th image.
c) T_i start time of the i'th acquisition,
d) $T_{acq,i}$ duration of the i'th acquisition,
e) T_{cal} time of the activity calibration,
f) T_{half} half life of radionuclide (=21672 sec for Tc-99m).

Using a standard Levenberg-Marquardt non-linear least squares fit technique (Refs. 1-2) fit the decay-corrected count rates and the separation of the detector and the phantom to the function,

$$R_i = c_0 + c_1 \exp(-c_2 D_i) \quad \text{Equation 3-8}$$

where c_0, c_1, and c_2 are fitting parameters and D_i is the distance from the face of the detector to the bottom of the phantom. Compute the collimator penetration fraction *PF* at D_N, where D_N = 100mm,

$$PF = \frac{c_1 \exp(-c_2 D_N)}{c_0 + c_1 \exp(-c_2 D_N)}. \quad \text{Equation 3-9}$$

To calculate sensitivity, sum over the entire image acquired with the phantom 100 mm from the collimator. Calculate the decay-corrected total count rate as,

$$Rt_{100} = Ct_{100} \times \exp\left(\frac{(T_{100} - T_{cal})}{T_{half}} \ln 2\right) \times \left(\frac{\ln 2}{T_{half}}\right)\left(1 - \exp\left(-\frac{T_{acq,100}}{T_{half}} \ln 2\right)\right)^{-1} \quad \text{Equation 3-10}$$

where,

a) Rt_{100} = decay-corrected count rate at 100 mm,
b) Ct_{100} = summed counts at 100 mm.
Calculate the total system sensitivity S_{TOT} as,

$$S_{TOT} = \frac{Rt_{100}}{A_{cal}} \quad \text{Equation 3-11}$$

where A_{cal} is the amount of radioactivity measured in the phantom at time T_{cal} after correcting for residual activity in the syringe.

3.8.5 Reporting

For each collimator and radionuclide S_{TOT} shall be reported in (counts/sec)/MBq, PF shall be reported as a percentage, and the curve of R_i versus D_i will be provided along with the fit curve.

3.8.6 Referenced Documents

1. Bevington, P.R. 1969, Data Reduction and Error Analysis for the Physical Sciences (New York: McGraw-Hill), Chapter 11.

© Copyright 2001 by the National Electrical Manufacturers Association.

Copyright National Electrical Manufacturers Association
Provided by IHS under license with NEMA
No reproduction or networking permitted without license from IHS
Not for Resale

2. Press, W.H., Teukolsky, S.A., Vetterling, W.T., and Flannery, B.P. 1992, Numerical Recipes in C (Cambridge: Cambridge University Press), Chapter 15.

3.9 DETECTOR SHIELDING

The detector shielding measurements assess the sensitivity of the gamma camera detector to:

a) Radioactivity in the patient being imaged which lies outside the field of view.

b) Stray sources of radiation that might be present in the vicinity of the camera (e.g. patients in adjoining examination rooms or patients awaiting examination who have been injected with a radioactive tracer).

To assess the effectiveness for case (a), measurements are made of the leakage from a test source positioned outside the field of view in the plane of the patient table. To assess the effectiveness of shielding for stray sources, case (b), measurements are made of the count rates obtained from sources positioned at two meters from the detector at the side and in front of the system. The measured values of detector shielding shall meet or exceed the specification.

3.9.1 Test Conditions

The radionuclides employed for these measurements shall be those for which the system is designed. Measurements shall be made with Tc-99m and with the highest energy nuclide for which the camera is specified to operate (or the highest energy that is expected to be used). The amount of radioactivity shall be sufficient to generate a count rate of at least 1,000 cps and not more than 30,000 cps through the collimator at the first imaging position (centered under the collimator).

For Tc-99m a 15% energy window shall be used. For other radionuclides, the manufacturer's recommended energy settings for the nuclide being tested should be used. The collimator used shall be that recommended for imaging the test isotope.

3.9.2 Test Equipment

The test equipment required for this measurement consists of a 1 to 5 cc plastic vial containing the radionuclide source.

3.9.3 Measurement Procedure

a) The unshielded source shall be placed on the imaging table under the collimator (see Figure 3-4a). The detector shall be positioned 20 cm above the table and facing down. The count rate shall be measured at fixed positions starting with the source centered in the Field of View, then at 10 cm, 20 cm, 30 cm outside the edge of the field of view, in each direction (seven measurements in all, as shown in

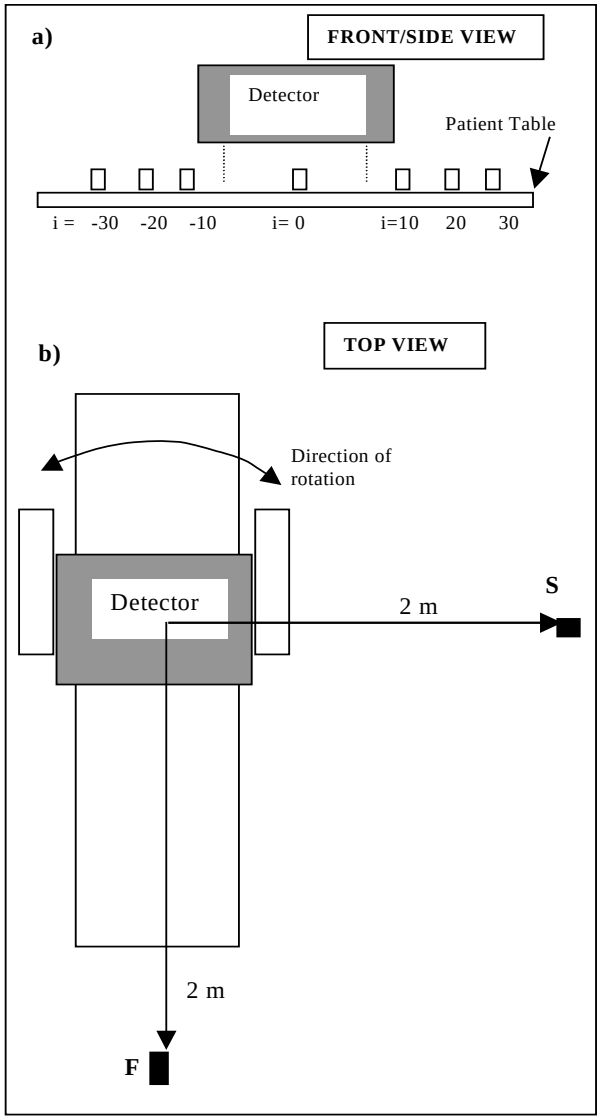

Figure 3-4
SOURCE POSITIONS FOR SHIELD LEAKAGE MEASUREMENTS.

© Copyright 2001 by the National Electrical Manufacturers Association.

Copyright National Electrical Manufacturers Association
Provided by IHS under license with NEMA
No reproduction or networking permitted without license from IHS
Not for Resale

Figure 3-4a). At each source position, i, the number of counts, CA_i, collected in time, TA_i, shall be recorded. CA_i shall be greater than 10,000. A background count rate, CB, shall be measured by collecting counts for one minute or longer.

b) To assess the effectiveness of the shielding in relation to stray sources two additional sets of measurements are required. A source similar to that used in part a) is positioned two meters from the detector and directly in front of it (position F in Figure 3-4b) and one meter above the floor. The source may be shielded as in Figure 3.2, with the open end of the shield pointing directly toward the detector. The count rate shall be measured with the detector positioned at each of 4 equally spaced positions in a 360 degree arc used for tomographic acquisitions (i.e. with the detector facing up, down, left, and right). At each of these positions the number of counts, CF_i, in the time TF_i, is recorded. The source and source holder is then positioned 2 meters to the side of the gantry (position S, in Figure 3-4b) and one meter from the floor, (at position, S, in Figure 3-4b). The source holder opening should be pointed directly at the detector during the measurement. Measurements of count rate are then made with the detector at three positions: with the detector facing up, down, and away from the source. (The positions are the same as those when the source is at position F, but the position where the detector is pointing toward the source is not used.) At each of these positions the number of counts, CS_i, in the time TS_i, is recorded.

3.9.4 Calculations and Analysis

For each of the source positions compute the background-subtracted count rate:

$$\begin{aligned} BCi &= (CAi - CB)/TAi \\ BCFi &= (CFi - CB)/TFi \\ BCSi &= (CSi - CB)/TSI \end{aligned} \qquad \text{Equations 3-12}$$

The shield leakage is expressed as the count rate (minus background) at each position, as a percentage of the count rate (minus background) when the source was in the central position (BC_0):

$$\begin{aligned} L_i &= 100 * BC_i/BC_0 \\ LF_i &= 100 * BF_i/BC_0 \\ LS_i &= 100 * BS_i/BC_0. \end{aligned} \qquad \text{Equation 3-13}$$

The largest of the count rate measurements for each position shall be identified; i.e. the largest of the L_i (excluding i=0), the largest of the LF_i, and the largest of the LS_i, (excluding the three values where the detector points towards the source).

3.9.5 Reporting

The largest value of the L_i (excluding i=0), LF_i and LS_i for each radionuclide measured, shall be reported as the shield leakage for that radionuclide. The measured values shall meet or exceed the specification.

3.10 DETECTOR-DETECTOR SENSITIVITY VARIATION

In multi-detector gamma camera systems, Detector-Detector Sensitivity Variation is the relative difference in sensitivity of the individual detectors assessed in tomographic mode. The values reported shall be typical of the model (see section 1.3.4).

3.10.1 Test Equipment

Measurements shall be made using the phantom described in the section on Volume Sensitivity (section 3.12) and illustrated in Figure 3-7.

The sources shall be configured as described in section 3.12, System Volume Sensitivity.

© Copyright 2001 by the National Electrical Manufacturers Association.

Copyright National Electrical Manufacturers Association
Provided by IHS under license with NEMA
No reproduction or networking permitted without license from IHS
Not for Resale

3.10.2 Measurement Procedure

A tomographic acquisition of the phantom shall be performed with data collected from all detectors. The acquisition shall extend over 360 degrees for each detector, with at least 30 projection images being obtained by each detector. The images for each detector shall be equally spaced over 360 degrees. If the data are collected correctly, the same data may be used for this test and for measuring Volume Sensitivity.

3.10.3 Calculations and Analysis

The raw (unprocessed) projection images are used for the analysis. All the projection images collected using detector one are summed to form image, Sum_1. Similarly all projection images collected using detector two are summed to form Sum_2, and so on for each detector.

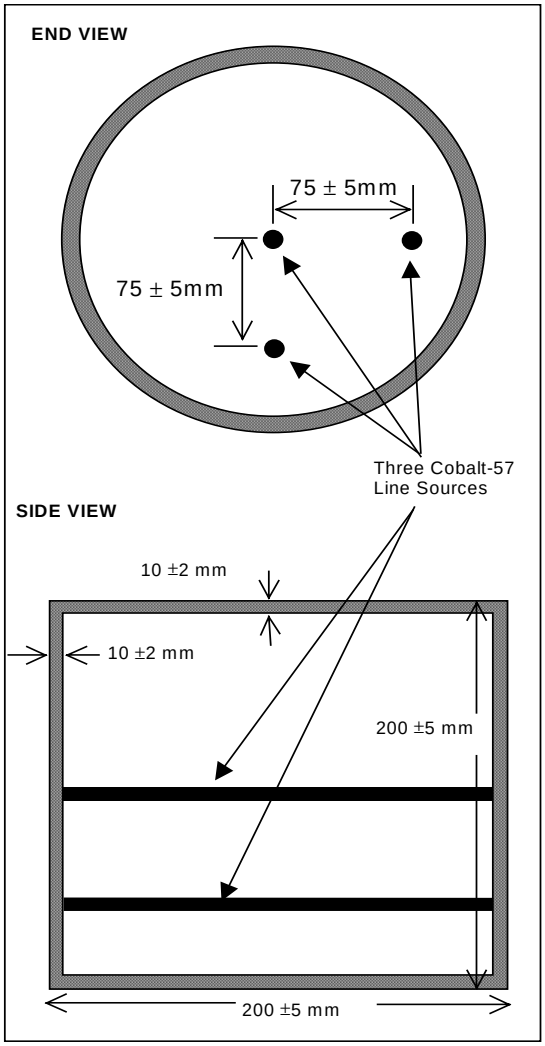

Figure 3-5
SPECT RECONSTRUCTED SYSTEM SPATIAL RESOLUTION WITH SCATTER

The total counts in each of the Sum images are computed:

C_i = Total Counts in Sum
Equation 3-14

The difference between the largest of the C_i and the smallest of the C_i is expressed as a percentage of the largest value:

$$DDS = 100 \times (C_{max} - C_{min})/C_{max}$$ Equation 3-15

3.10.4 Reporting

For a multi-detector system, maximal percentage sensitivity difference between a pair of detectors, DDS, is reported as Detector-Detector Sensitivity Variation.

3.11 SPECT RECONSTRUCTED SPATIAL RESOLUTION WITH SCATTER

The reconstructed transaxial spatial resolution shall be measured using three line sources in a cylinder of water. The measured values shall meet or exceed those specified.

3.11.1 Test Conditions

Tc-99m or Co-57 line sources shall be used with a symmetric photopeak energy window of 15 percent. The count rate shall not exceed 20,000 cps.

3.11.2 Test Equipment

The phantom shall consist of a water filled acrylic cylinder with an inside diameter of 20 mm and containing three axial line sources with a diameter of 1 mm. This phantom is described in Figure 3-5.

© Copyright 2001 by the National Electrical Manufacturers Association.

Copyright National Electrical Manufacturers Association
Provided by IHS under license with NEMA
No reproduction or networking permitted without license from IHS
Not for Resale

3.11.3 Measurement Procedure

The specified phantom shall be aligned with the system's axis of rotation within ± 2 mm and centered in the field of view. The phantom shall be imaged using a 360° circular orbit SPECT acquisition of radius 150 ± 5 mm. The acquisition reconstructed matrix size shall have an effective pixel size of less than or equal to 2.5 mm. At least 100,000 total counts must be acquired in each of at least 120 different projection angle images or 360° utilizing step and shoot mode.

3.11.4 Calculations and Analysis

One transverse slice, 10 ± 3 mm in thickness, shall be reconstructed through the center of the phantom using the filtered back projection technique with a ramp filter. If, in addition, other reconstruction techniques are used, they shall be specified with the results. Two additional transverse slices, each 10 ± 3 mm in thickness, shall also be reconstructed and centered about ± 40 mm from the center along the axis of rotation.

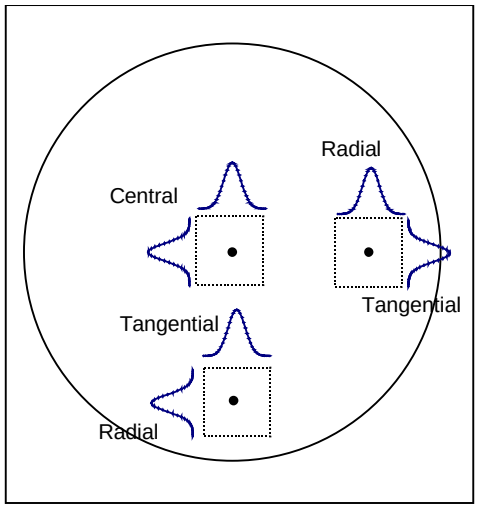

Figure 3-6
CALCULATING RECONSTRUCTED SYSTEM SPATIAL RESOLUTION

The three reconstructed points in each of the three reconstructed slices shall be analyzed individually with a square region of interest. Each region of interest shall be centered on the maximum count pixel. The size of this square region of interest must be at least four times the anticipated FWHM of the count profile to be analyzed. For each point in the images, the FWHM in X and Y shall be determined according to the method described in section 2.1.4.

Referring to Figure 3-6, the average FWHM radial value of the six radial measurements on the three slice images of the two peripheral sources shall be calculated. Likewise, the average tangential FWHM value of the six tangential measurements on the images of the two peripheral sources shall be calculated. Also, the average of the six measurements (three in the X direction and three in the Y direction) for the three images of the center source shall be calculated.

3.11.5 Reporting

Three FWHM resolution values shall be reported. One FWHM value for the central source and two FWHM values for the peripheral sources (one for the radial direction and one for the tangential direction). All FWHM resolution values shall be reported in millimeters to the nearest one tenth of millimeter.

3.12 SYSTEM VOLUME SENSITIVITY

The system volume sensitivity shall be measured and the average volume sensitivity per axial centimeter determined from this measurement. The system volume sensitivity is the total system sensitivity to a uniform concentration of activity in a specific cylindrical phantom. System volume sensitivity measurements are dependent on detector configuration, collimator type, radionuclide type, energy window setting, source configuration and other factors.

The values reported shall be typical of the system (see section 1.3.4).

© Copyright 2001 by the National Electrical Manufacturers Association.

Copyright National Electrical Manufacturers Association
Provided by IHS under license with NEMA
No reproduction or networking permitted without license from IHS
Not for Resale

3.12.1 Test Conditions

The radionuclides employed for these measurements shall be those for which the collimators were designed. The measurement count rate for each projection image shall be 10,000 ± 2000 cps through a symmetric 15 percent photopeak energy window or windows. For other radionuclides, the manufacturer's recommended energy settings for the nuclide being tested should be used.

3.12.2 Test Equipment

The test equipment required for this measurement consists of a plastic syringe, an accurate dose calibrator and a specified 200 mm diameter cylindrical phantom, described in Figure 3-7.

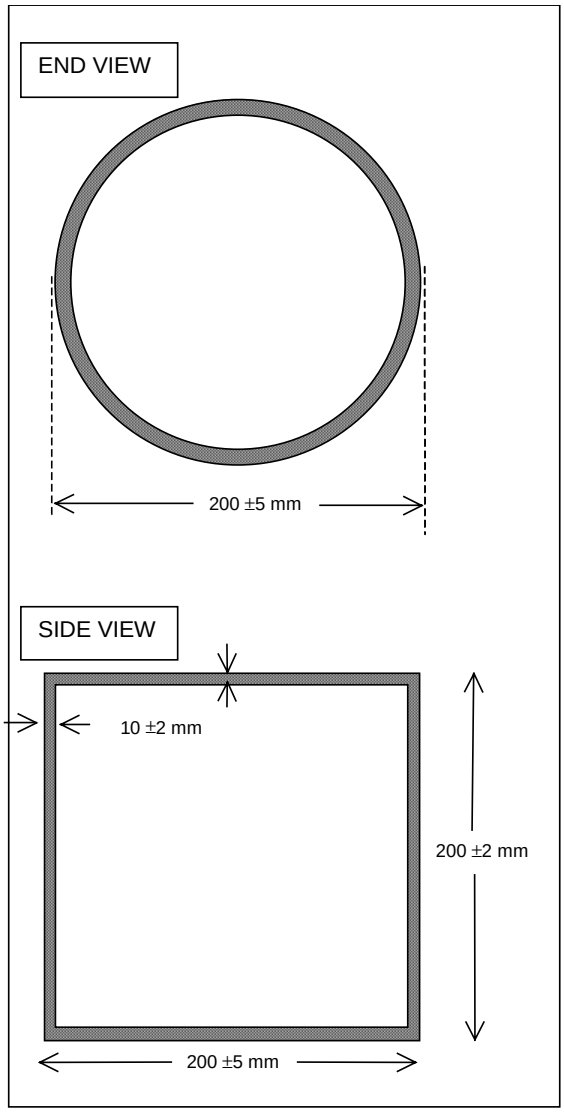

Figure 3-7
VOLUME SENSITIVITY CYLINDRICAL PHANTOM (ACRYLIC)

3.12.3 Measurement Procedure

Accurately determine the activity concentration in kBq/cm^3 within the specified cylindrical phantom at initial time T_i. This is done by dividing the measured activity placed in the phantom at T_i by the measured volume of water in the phantom. This well mixed and uniform cylindrical source shall be positioned in the center of the system's image space with its symmetry axis coincident within ± 5 mm of the axis of rotation of the SPECT system.

Perform a 360° circular orbit SPECT acquisition of radius 150 ± 5 mm. At least 120 but not more than 128 different projection angle images shall be acquired. Each projection image shall contain 100,000 ± 20,000 counts through a 15 percent symmetric photopeak window. For multi-head systems, the images from all heads may be summed to achieve the required number of projection images. Field uniformity correction devices, or any other mechanisms which alter the number of counts in these projection images, must be disabled.

Measure the total elapsed time to complete the required 360° SPECT acquisition. Also measure and sum the counts from all the projection images to determine the total counts detected in this total elapsed time.

3.12.4 Calculations and Analysis

Calculate the average counts per minute for the SPECT acquisition (A) by dividing the total counts imaged by the total elapsed time. Calculate the source activity concentration (B_c) at time T halfway through the 360° SPECT acquisition by applying the proper source decay correction factor for the radionuclide used.

© Copyright 2001 by the National Electrical Manufacturers Association.

Copyright National Electrical Manufacturers Association
Provided by IHS under license with NEMA
No reproduction or networking permitted without license from IHS
Not for Resale

The system volume sensitivity (SVS) is then:

$$SVS = \frac{A(cts/\sec)}{B_c\,(MBq/cm^3)} \qquad \text{Equation 3-16}$$

The volume sensitivity per axial centimeter, VSAC, is then determined by dividing the SVS by the axial length of the cylindrical source (i.e., 20 cm).

$$VSAC = \frac{SVS}{Length} \qquad \text{Equation 3-17}$$

If the total length of the source cannot be used to obtain the volume sensitivity measurement, the actual length used must be stated along with the results.

3.12.5 Reporting

Report the volume sensitivity per axial centimeter (VSAC) in counts per second per MegaBecquerel per cubic centimeter, (cts/sec)/(MBq/cm^3), for each radionuclide and collimator type. If no radionuclide is reported, than Tc-99m is assumed. Also state the method of acquisition (continuous, step and shoot or other).

3.13 RECONSTRUCTED IMAGE UNIFORMITY

A procedure for quantifying the reconstructed flood field uniformity is not available at this time for incorporation into this Standards Publication. Reconstructed flood field uniformity should be recognized as an essential element in specifying the performance of SPECT systems. Therefore, a standard procedure for this measurement is being pursued and will be issued as a revision to this Standards Publication as soon as feasible.

3.13.1 Rationale for Reconstructed Image Uniformity

Assessment of the reconstructed flood field uniformity of a system is essential for evaluating the performance of a SPECT system. Visualization of artifacts, or structured noise, could have a large detrimental effect on clinical imaging. Patterned non-uniformities can be easily visualized even in the presence of unstructured noise of a much larger variance. Patterned non-uniformities superimposed over a large gradient in reconstructed values due to attenuation are also easily visualized.

For these reasons, simple quantification techniques are incapable of providing an accurate correlate to visual perception. Complex quantitative measures, such as examining the power contained in certain spatial frequency ranges, which might correspond to the frequencies of patterned artifacts without being dominated by random variations, are being investigated. Such techniques will be dependent on the reconstruction filtering and total counts. No acceptable quantitative measure of reconstructed image uniformity is yet available, given the necessity that such measure be both an accurate predictor of visual perception and robust over a reasonable range of operating parameters. Therefore, a visual assessment of reconstructed uniformity is recommended at this time.

© Copyright 2001 by the National Electrical Manufacturers Association.

Copyright National Electrical Manufacturers Association
Provided by IHS under license with NEMA
No reproduction or networking permitted without license from IHS
Not for Resale

© Copyright 2001 by the National Electrical Manufacturers Association.

Copyright National Electrical Manufacturers Association
Provided by IHS under license with NEMA
No reproduction or networking permitted without license from IHS
Not for Resale

Section 4
TESTS OF DISCRETE PIXEL DETECTOR CAMERAS

4.1 INTRINSIC SPATIAL RESOLUTION

The concept of intrinsic spatial resolution as defined for single crystal cameras is not analogous, nor directly applicable to that of discrete pixel cameras. Overall system spatial resolution is described in Section 4.10.

4.2 INTRINSIC SPATIAL LINEARITY

The concept of intrinsic spatial linearity as defined for single crystal cameras is not analogous, nor directly applicable to discrete pixel cameras.

4.3 INTRINSIC ENERGY RESOLUTION

Intrinsic energy resolution shall be measured as and expressed as the ratio of the photopeak Full Width at Half Maximum (FWHM) to the photopeak center energy, given as a percentage. Measured values shall meet or exceed the specification.

4.3.1 Test Conditions

The radionuclide employed for this test shall be Tc-99m. A source holder which shields the source from the walls, ceiling and personnel without restricting the gamma flux from the source to the camera (as shown in Figure 2-1) shall be employed. The integral count rate shall not exceed 300,000 cps through a 15% energy window centered on the photopeak.

4.3.2 Test Equipment

The test equipment shall include the means to digitize the energy spectrum with a channel depth of at least 1,000 counts, for each detector in the array, and a digital resolution of less than or equal to 0.05 FWHM of Tc-99m photopeak.

4.3.3 Measurement Procedure

The radionuclide shall be a Tc-99m point source centered at least five times the largest linear dimension of the UFOV above the detector. A second radionuclide, Co-57, shall be employed as a reference in order to determine the keV per channel calibration factor. The spectra for Tc-99m and Co-57 shall be separately stored for each individual detector. At least 1,000 counts shall be stored in the peak channel of each spectrum measurement.

4.3.4 Calculations and Analysis

The spectra from individual detectors for each radionuclide shall be summed. For each radionuclide the summed spectra photopeak location shall be determined as the average of the linearly interpolated half height channel values, calculated for each side of the photopeak (see Figure 2-3).

The difference between the two photopeak locations in channel numbers should correspond to 18.4 keV, which is the difference between the 140.5 keV of the Tc-99m photopeak center energy and the 122.1 keV of the Co-57 photopeak center energy. The intrinsic energy resolution shall be calculated from the Tc-99m summed spectrum. The FWHM in channel numbers shall be determined from the linearly interpolated half height channel values and calculated for each side of the Tc-99m photopeak. This value shall be multiplied by the keV's per channel calibration factor, divided by 140.5 keV corresponding to the Tc-99m photopeak center energy, and multiplied by 100 in order to obtain the value as a percentage.

© Copyright 2001 by the National Electrical Manufacturers Association.

Copyright National Electrical Manufacturers Association
Provided by IHS under license with NEMA
No reproduction or networking permitted without license from IHS
Not for Resale

4.3.5 Reporting

The intrinsic energy resolution, calculated from the sum of the spectra for individual detectors, for a Tc-99m radionuclide shall be reported as a percentage.

4.4 SYSTEM UNIFORMITY

The system uniformity shall be measured with a parallel hole collimator. The system uniformity is the response of the system, with a collimator, to a uniform field of radiation from a uniform sheet or flood source. Two different uniformity parameters shall be determined: integral uniformity and differential uniformity. Integral uniformity is a measure of the maximum detector count deviation in the UFOV. Differential uniformity is a measure of the maximum deviation over a limited range designed around the individual detector size.

Measured values of integral and differential uniformity shall meet or exceed the specification.

4.4.1 Test Conditions

The radionuclide used to measure system uniformity shall be Co-57. Any other radionuclide shall be reported separately. The count rate shall not exceed 500,000 cps through a 15% energy window centered on the photopeak. The status of detector corrections used shall be stated with the results.

4.4.2 Test Equipment

The test equipment required for this measurement consists of a Tc-99m or Co-57 flood source large enough to cover the UFOV.

4.4.3 Measurement Procedure

The system uniformity shall be measured for each collimator supplied. The uniformity data shall be stored in a matrix having as many points as there are detector elements. Each uniformity measurement shall acquire a minimum of 30,000 counts in the maximum pixel.

The flood source shall be placed 5 centimeters from the face of the collimator and centered so that all collimator holes are covered by the source.

4.4.4 Calculations and Analysis

4.4.4.1 Data Preparation

The flood field image, after removing the edge pixels, shall be smoothed once by convolution with a 9-point filter function of the following weightings:

1	2	1
2	4	2
1	2	1

No edge pixels are discarded. The weighting factor for a pixel outside the analyzed area in the 9-point filter function shall be zero. The smoothed value shall be normalized by dividing by the sum of non zero weighting factors.

© Copyright 2001 by the National Electrical Manufacturers Association.

Copyright National Electrical Manufacturers Association
Provided by IHS under license with NEMA
No reproduction or networking permitted without license from IHS
Not for Resale

4.4.4.2 Integral Uniformity

For pixels within the UFOV the maximum and minimum values shall be identified. The difference between the maximum and minimum is divided by the sum of these two values and multiplied by 100 percent. The formula for integral uniformity is defined in Section 2.3.4 and is restated here for convenience.

$$Integral\ Uniformity = \pm 100\% ((Max - Min) / (Max + Min)) \qquad \text{Equation 4-1}$$

The correction factors shall then be applied to the uniformity data and the corrected integral uniformity shall be calculated.

4.4.4.3 Differential Uniformity

For all pixels, within the UFOV, the largest difference between any two pixels within a set of three contiguous pixels in a row or column shall be calculated. The calculation shall be done for the X and for the Y directions independently and the maximum change expressed as a percentage using the formula defined in Section 2.3.4 and restated here for convenience.

$$Differential\ Uniformity = \pm 100\% ((Max - Min) / (Max + Min)) \qquad \text{Equation 4-2}$$

The corrected data are treated as a number of rows (X slices) and columns (Y slices). Each slice is processed by starting the beginning pixel for the respective direction. A set of three contiguous pixels is examined to find the maximum and minimum pixels. The percent uniformity is calculated using these values. The next set of three contiguous pixels is analyzed by stepping forward one pixel and again determining the percent uniformity. This is repeated until the outermost pixel is reached for the field of view. The maximum percent uniformity is found in the slice. The process is then repeated for all the slices in the field of view. The maximum for all slices is found.

The correction factors shall then be applied to the uniformity data and the corrected integral uniformity is then calculated.

4.4.5 Reporting

The results shall be reported, expressed as the percentage integral and differential uniformity within the UFOV for each collimator supplied with the system.

The results are reported as uncorrected uniformity and also as corrected uniformity.

4.5 MULTIPLE WINDOW SPATIAL REGISTRATION

Multiple window spatial registration is a measure of the camera's ability to accurately position photons of different energies when imaged through different photopeak energy windows. Measurements shall be made at nine specified points on the scintillation camera.

The measured values shall meet or exceed the specification.

4.5.1 Test Conditions

The radionuclides employed to measure multiple window spatial registration shall be Am-241 and Tc-99m. The count rate shall not exceed 50,000 cps through 15% energy window centered on the photopeak.

© Copyright 2001 by the National Electrical Manufacturers Association.

Copyright National Electrical Manufacturers Association
Provided by IHS under license with NEMA
No reproduction or networking permitted without license from IHS
Not for Resale

4.5.2 Test Equipment

A lead-lined source holder shall collimate the Am-241 or Tc-99m source through a circular tunnel in the lead. This circular tunnel shall be 5 mm in diameter and 25 mm in length. The high-resolution collimator shall be used.

4.5.3 Measurement Procedure

Images shall be acquired using the above described collimated Am-241 and Tc-99m sources located at nine specific points on a plane 10 cm from the surface of the collimated camera and using the camera's scanning capabilities. These nine points shall be the central point, four points on the X-axis and four points on the Y-axis. The off central points shall be located 0.4 times and 0.8 times the distance from the central point to the edge of the UFOV of the camera along the respective axis. Separate images of the collimated Am-241 and Tc-99m sources shall be acquired in the scanning mode of the camera. These images shall be stored in a matrix where each element represents one detector pixel. At least 1,000 counts shall be acquired in the peak pixel for each photopeak image.

4.5.4 Calculations and Analysis

The displacement of the count centroids from each other in the X and Y directions shall be determined for each measurement point's photopeak images. A square region of interest (ROI) centered on the maximum count pixel associated with each photopeak image shall be used to analyze the individual photopeak images. The pixel dimensions of the square ROI shall be approximately four times the FWHM of the image count profile to be analyzed. Each image shall be integrated in the Y direction to determine the X count profile and integrated in the X direction to determine the Y count profile. The centroid of counts in the X and Y directions shall be determined for each image from the count profiles using the method described in section 3.2 and restated below. The maximum difference in position of the centroid of counts acquired from each photopeak shall be determined. The largest pixel displacement shall then be converted to millimeters using an accurate millimeter per pixel calibration determined from the physical spacing of the individual detector elements.

4.5.4.1 Method for Centroid of Count Determination

The center of counts in the X and Y directions for each of the photopeak count profiles shall be determined as follows. Find the maximum count pixel in the integrated X or Y profile and calculate the centroid of counts using the following formula:

$$L_j = \frac{\sum_{i=1}^{n} (X_i \times C_i)}{\sum_{i=1}^{n} C_i} \qquad \text{Equation 4-3}$$

Where:

L_j = calculated centroid location for energy window j, where j can equal 1 or 2.

X_i = X or Y profile pixel at the i-th location

C_i = counts at the X_i or Y_i location.

Σ = sum over an odd number of count profile pixels
centered on the maximum count profile pixel. The exact odd number of pixels will depend on the FWHM of the count profile and the pixel size. The minimum number of pixels in this sum shall include both the left and right half maximum counts.

© Copyright 2001 by the National Electrical Manufacturers Association.

Copyright National Electrical Manufacturers Association
Provided by IHS under license with NEMA
No reproduction or networking permitted without license from IHS
Not for Resale

The displacement D_{ij} between energy windows i and j is then:

$$D_{ij} = | L_i - L_j |$$ Equation 4-4

where i = 1 or 2 and j = 1 or 2

The maximum displacement is simply the largest D_{ij}

4.5.5 Reporting

The multiple window spatial registration shall be reported as the maximum displacement in either the X or Y direction of the photopeak centroids for the nine points measured, and shall be reported in millimeters to the nearest tenth of a millimeter.

4.6 INTRINSIC COUNT RATE PERFORMANCE IN AIR

Decaying source method shall be used to determine count rate performance. Two parameters shall be measured and reported: observed count rate for a 20 % count loss and a maximum count rate. Both parameters shall be measured without induced scatter. The curve of observed count rate versus input count rate shall be provided.

The specification is intended to indicate typical performance (see section 1.3.4).

4.6.1 Test Conditions

The radionuclide employed for the test shall be Tc-99m. Any other radionuclide(s) employed shall be separately reported.

The energy window shall be 15% centered on the photopeak. The camera shall be tested in normal mode (see section 1.3.3).

4.6.2 Test Equipment

A camera under test shall not have a collimator installed. The source shall be placed within a lead container as shown in Figure 3-2. The open side (facing the detectors) shall be covered by 6 mm of copper plates. The source intensity shall be such that it produces an input count rate which is larger than the count rate required to cause foldover in the observed count rate.

4.6.3 Measurement Procedure

Determine the background count rate, N_{bkg}. The suggested time for this determination is 10 minutes. The lead holder with the source shall be placed in a suitable position in front of the detector. The source holder shall be positioned so that the collimated cone of radiation is centered within the UFOV and that the irradiated area of the detector extends fully across the smaller dimension of the UFOV. Care must be taken to minimize scatter.

The start (t_i) and elapsed time (Δt_i) of the measurement shall be recorded for each data point, together with the number of counts collected, Ct_i, where (i) is the number of the data point.

The time shall be measured relative to the start of acquisition time of the measurement of the first data point. For each data point (Ct_i), at least 100,000 counts shall be collected. Data should be acquired for 10 seconds or 100,000 counts, whichever is longer.

© Copyright 2001 by the National Electrical Manufacturers Association.

Copyright National Electrical Manufacturers Association
Provided by IHS under license with NEMA
No reproduction or networking permitted without license from IHS
Not for Resale

The measurement should be performed so that the points are taken as soon as the observed count rate changes by 10,000 cps from the previous measured point. The last (n-th) point taken should be measured when an observed count rate drops below 4,000 cps.

4.6.4 Calculations and Analysis

Each data point shall be corrected for background as follows:

$$C_i = Ct_i \; - \; (N_{bkg} * \Delta t_i) \qquad \text{Equation 4-5}$$

The observed count rate (OCR_i) and the input count rate (ICR_i) for each data point shall be calculated according to equations 3-3 to 3-6 defined in Section 3.3.4.

4.6.5 Explanation

The purpose of Equation 4-5 is to correct the measurements for background. Scaling to the beginning of the measurement as defined by Equation 3-4 is not required because the error produced in counting to 100,000 counts at a count rate of 15,000 cps is not significant.

4.6.6 Reporting

Typical values (see section 1.3.4) of the maximum observed count rate, the observed count rate at 20% loss, and the curve of observed count rate vs the input count.

4.6.7 Technical Note

This test is very time-consuming, taking approximately two days. An alternative method is to use carefully calibrated copper sheets as discussed in the following articles:

1. A New Approach to NEMA Scintillation Camera Count Rate Curve Determination, by E. M. Geldenhuys et al. JNM Vol. 29, No. 4, April 1988 p. 538.

2. *Spectral Changes Affect Intrinsic Count Rate Tests*, by Stephen I. Breem / Trevor D. Cradduck, JNM Vol. 31, No. 12, December 1990, p. 2074.

Traceability of this method to above standards must be demonstrated.

4.7 SYSTEM COUNT RATE PERFORMANCE WITH SCATTER

Decaying source method shall be used to determine the count rate performance. Two parameters shall be measured and reported: observed count rate for a 20% count loss and a maximum count rate. Both parameters shall be measured with scatter. The curve of observed vs input count rate shall be provided. The specification of Count Rate Performance with scatter shall be of typical performance (see section 1.3.4).

4.7.1 Test Conditions

The radionuclide employed for the test shall be Tc-99m. Any other radionuclide(s) employed shall be separately reported. The energy window shall be 15% centered on the photopeak. The camera shall be tested in a normal mode per Section 1.3.3.

© Copyright 2001 by the National Electrical Manufacturers Association.

Copyright National Electrical Manufacturers Association
Provided by IHS under license with NEMA
No reproduction or networking permitted without license from IHS
Not for Resale

4.7.2 Test Equipment

A camera under test shall have a low energy collimator of highest efficiency mounted. The source shall be in water filling a plastic cylindrical phantom with dimensions shown in Figure 3-3. The source intensity shall be such that it produces an input count rate which is larger than the count rate required to cause foldover in the observed count rate.

4.7.3 Measurement Procedure

The detector shall be positioned to view the 50 mm thick plastic base of the phantom. The distance between the phantom and the face of the collimator shall not be more than 20 mm. The phantom shall be centered within the UFOV.

Prior to beginning the measurement, the background count rate, N_{bkg}, shall be determined. The start time (t_i) and elapsed time (Δt_i) of the measurement shall be recorded for each data point, where (i) is the number of the data point.

The time shall be measured relative to the start of acquisition time of the measurement of the first data point. For each data point (C_i), at least 100,000 counts shall be collected. Data shall be acquired for 10 seconds or 100,000 counts, whichever is longer.

The measurement should be performed so that the points are taken as soon as the observed count rate changes by 10,000 cps from the previous measured point. The last (n-th) point taken should be measured when an observed count rate drops below 15,000 cps.

4.7.4 Calculations and Analysis

The observed count rate (OCR_i) shall be determined for each data point according to the following formula:

$$OCR_i = -C_i - (N_{bkg} * \Delta t_i) \qquad \text{Equation 4-6}$$

where all measurement times are in seconds, or fractions thereof.

The input count rate (ICR_i) for each data point shall be calculated according to formula (2) defined in Section 3.3.4 and restated here as:

$$ICRi = OCRn * exp((tn - ti) / 21672 * ln(2)) \qquad \text{Equation 4-7}$$

Where 21672 represents the number of seconds in one half life of Tc-99m.

The observed count rate at 20% loss shall be determined by linear interpolation between the two closest points to the equation

$$Li = 0.8 * ICRi \qquad \text{Equation 4-8}$$

4.7.5 Explanation

The purpose of Equation 4-5 is to correct the measurements for background. Scaling to the beginning of the measurement as defined by Equation 4-5 is not required because the error introduced by counting to 100,000 counts at a count rate of 4,000 cps is not significant.

© Copyright 2001 by the National Electrical Manufacturers Association.

Copyright National Electrical Manufacturers Association
Provided by IHS under license with NEMA
No reproduction or networking permitted without license from IHS
Not for Resale

4.7.6 Reporting

Typical values (see section 1.3.4) of the maximum observed count rate, the observed count rate at 20% loss, and the curve of observed count rate, with scatter versus the input count rate shall be reported.

4.8 INTRINSIC SPATIAL RESOLUTION AT 75,000 COUNTS PER SECOND

The concept of intrinsic spatial resolution as defined for single crystal cameras is not analogous, nor directly applicable to that of discrete pixel cameras. Overall system spatial resolution is described in Section 4.10.

4.9 SYSTEM FLOOD FIELD UNIFORMITY AT 400,000 COUNTS PER SECOND

Intrinsic flood field uniformity shall be measured at 400,000 counts per second and the Integral and Differential uniformity for the UFOV shall be reported following the procedures and reporting of Section 4.4.

4.10 SYSTEM SPATIAL RESOLUTION WITH AND WITHOUT SCATTER

The system spatial resolution with and without scatter shall be measured and expressed as Full Width at Half Maximum (FWHM) and Full Width at Tenth Maximum (FWTM) of the line spread function. The measured values shall meet or exceed the specification.

4.10.1 Test Conditions

The radionuclide employed for this measurement shall be Tc-99m. The count rate shall not exceed 300,000 cps through a 15% energy window centered on the photopeak.

4.10.2 Test Equipment

The test equipment required for these measurements shall consist of two capillary tubes with an inside diameter of less than or equal to 1.0 mm and a length greater than 30 mm. Also, acrylic scattering blocks, the size of the UFOV of the system to be measured and 100 and 50 mm thick, are required for the "with scatter" measurements. The required acrylic scattering thickness may be assembled from thinner pieces but must still cover than entire UFOV. Also required is a method of moving the tubes in 1.0 mm steps over a distance of 10 mm in both the X and the Y direction.

4.10.3 Measurement Procedure

The capillary tubes shall be filled with the desired radionuclide. One of these tubes shall be positioned 100 mm from the face of the system collimator and along the axis of measurement, X or Y.

At least 10,000 counts shall be collected in the peak point of each line-spread function. The measurement shall be made by displacing the capillary tube, and the scattering medium if used, in 1 mm steps for a total of 10 millimeters. Measure the FWHM and FWTM in pixels of all the line spread functions that fall within the UFOV, first in the X direction and then in the Y direction, using the method of Section 2.1.4.

A second measurement for each axis shall be performed with the second capillary tube also positioned 100 mm from the face of the collimator and 50 mm away from, and parallel to, the first tube. This measurement shall be used for calibration of the millimeters per pixel only. The single capillary tube measurement shall then be repeated using the acrylic scattering blocks. The capillary tube remains 100 mm from the face of the collimator and sandwiched between the 100 mm thick forward scattering block and the 50 mm back scattering block.

© Copyright 2001 by the National Electrical Manufacturers Association.

Copyright National Electrical Manufacturers Association
Provided by IHS under license with NEMA
No reproduction or networking permitted without license from IHS
Not for Resale

4.10.4 Calculations and Analysis

Convert the FWHM and FWTM measurements from pixels to millimeters using the measured millimeter per pixel calibration factor.

Average the appropriate "without scatter" measurements in both the X and Y directions. Average the appropriate "with scatter" X and Y direction measurements together.

4.10.5 Reporting

System spatial resolution, with and without scatter, shall be reported as FWHM and FWTM within the UFOV. The collimator and the radionuclide employed shall also be reported.

4.11 SYSTEM PLANAR SENSITIVITY

The Planar Sensitivity is the sensitivity in one acquisition plane to a specific planar source placed parallel to that plane. Planar sensitivity measurements are dependent on collimator type, window width, gamma energy, source configuration and other factors.

The Planar Sensitivity of the system shall be measured for each collimator type and reported in (counts/sec)/MBq. The measured values shall meet or exceed the specification.

4.11.1 Test Conditions

The radionuclides employed for these measurements shall be those for which the collimators are designed. The count rate shall not exceed 75,000 cps through a 15% energy window centered on the photopeak.

4.11.2 Test Equipment

The test equipment required for this measurement consists of a 1 to 5 cc volume plastic syringe, a calibrated dose calibrator, and a 100 mm diameter flat plastic dish (Petri dish).

4.11.3 Measurement Procedure

The source activity inside the plastic syringe shall be accurately measured using a dose calibrator. This source shall then be dispersed from the syringe into an approximately 3 mm deep water solution in a 100 mm diameter flat plastic dish.

The empty syringe shall be re-measured in the dose calibrator and the reading subtracted from the original reading to obtain the amount of activity in the dish at the time of preparation.

Calibration methods shall be those set forth in the NRC Regulatory Guide 10.8, or alternatively NIST traceable calibration sources shall be used as references with appropriate half life corrections. The prepared dish source shall be placed near the center of the Field of View and in a plane 100 mm from, and parallel to, the face of the collimator. No scatter material shall be present to affect this measurement.

Accurately determine the counts per minute recorded by the imaging system In this context "counts" shall be defined as detected interactions that fall within the energy window: therefore, field uniformity correction devices that alter the number of counts must be disabled.

© Copyright 2001 by the National Electrical Manufacturers Association.

Copyright National Electrical Manufacturers Association
Provided by IHS under license with NEMA
No reproduction or networking permitted without license from IHS
Not for Resale

4.11.4 Calculations and Analysis

Divide the determined number of counts per second by the activity in MBq at the time of the measurement to get the Planar Sensitivity of the system.

4.11.5 Reporting

Report typical values (see section 1.3.4) of Planar Sensitivity for the system in (counts/sec)/MBq. The radionuclide and collimator shall be stated.

4.12 DETECTOR SHIELDING

Shield leakage is the penetration of the shielding by sources placed 10 centimeters from the detector housing and reported as a leakage in (counts/ sec)/MBq. The shield leakage test for discrete pixel cameras reflects the greater likelihood that these machines will be used in intimate contact with a patient, and thus that radioactivity may be very close to the side or back shielding of the detector.

4.12.1 Test Conditions

Shield leakage shall be reported for Tc-99m and for a source specified with the maximum design energy of the camera. The count rate, when the source is placed 10 centimeters in front of the collimator of specified energy, shall be less than 10,000 cps through a 15% energy window centered on the photopeak. The count rate through the shielding shall be measured while the specified collimator is mounted to the camera.

4.12.2 Test Equipment

The test equipment for this measurement consists of a source holder shown in Figure 3-1 and a collimator of the specified energy. The vial containing the source shall be completely filled with water.

4.12.3 Measurement Procedure

The source shall be placed in the source holder. The source shall be imaged through the collimator of specified energy and the count rate recorded after counting at least 10,000 counts and recording the length of time.
The source shall be moved around the detector at a distance of 10 centimeters from the detector. Move around the sides and back of the detector to find the location of maximum counts. The source shall be counted at this location until the leakage counts, plus background counts, are three times the square root of the background counts.

Note that care must be taken to avoid Compton scatter from the source into the face of the collimator while measuring shield leakage.

4.12.4 Calculations and Analysis

The percent shielding leakage shall be calculated and reported as a number:

$$ShieldLeakage = \frac{MaxShieldCountRate}{CollimatorCountRate} \cdot 100 \qquad \text{Equation 4-9}$$

© Copyright 2001 by the National Electrical Manufacturers Association.

Copyright National Electrical Manufacturers Association
Provided by IHS under license with NEMA
No reproduction or networking permitted without license from IHS
Not for Resale

4.12.5 Reporting

Typical values (see section 1.3.4) of shield leakage shall be reported for Tc-99m and the highest energy radionuclide for which the detector is designed. The collimator used for the measurement shall be specified.

--`,,`-`-`,,`,,`,`,,`---

© Copyright 2001 by the National Electrical Manufacturers Association.

Copyright National Electrical Manufacturers Association
Provided by IHS under license with NEMA
No reproduction or networking permitted without license from IHS

Not for Resale