2595512 0078625 992

ADOPTION NOTICE

NEMA-MW1000, "Magnet Wire," was adopted on October 3, 1994 for use by the Department of Defense (DoD). Proposed changes by DoD activities must be submitted to the DoD Adopting Activity: Commander, Naval Sea Systems Command, SEA 03R42, 2531 Jefferson Davis Highway, Arlington, VA 22242-5160. DoD activities may obtain copies of this standard from the Standardization Document Order Desk, 700 Robbins Avenue, Building 4D, Philadelphia, PA 19111-5094. The private sector and other Government agencies may purchase copies from the National Electrical Manufacturers Association, 2101 L Street, N.W., Suite 300, Washington, DC 20037.

Custodians:
Army - CR
Navy - SH
Air Force - 85

Adopting Activity
Navy - SH

FSC 6145

DISTRIBUTION STATEMENT A. Approved for public release; distribution is unlimited.

Copyright National Electrical Manufacturers Association
Provided by IHS under license with NEMA
No reproduction or networking permitted without license from IHS

Not for Resale

6470247 0514949 43T

NEMA STANDARDS PUBLICATION NO. MW 1000-1997

MAGNET WIRE
Revision 2

Published by:

National Electrical Manufacturers Association
1300 N. 17th Street, Suite 1847
Rosslyn, VA 22209

© Copyright 1998 by the National Electrical Manufacturers Association. All rights including translation into other languages, reserved under the Universal Copyright Convention, the Berne Convention for the Protection of Literary and Artistic Works, and the International and Pan American Copyright Conventions.

Copyright National Electrical Manufacturers Association
Provided by IHS under license with NEMA
No reproduction or networking permitted without license from IHS

Not for Resale

NEMA Standards Publication No. MW 1000-1997

Magnet Wire

Published by:

National Electrical Manufacturers Association
1300 North 17th Street
Suite 1847
Rosslyn, Virginia 22209

© Copyright 1997 by the National Electrical Manufacturers Association. All rights including translation into other languages, reserved under the Universal Copyright Convention, the Berne Convention or the Protection of Literary and Artistic Works, and the International and Pan American Copyright Conventions.

Copyright National Electrical Manufacturers Association
Provided by IHS under license with NEMA
No reproduction or networking permitted without license from IHS
Not for Resale

6470247 0514950 151

Table of Contents

Part 1

GENERAL

Page

Forward viii
Purpose viii
How to Use this Publication ix

Part 1 GENERAL

1.1 SCOPE 1
1.2 REFERENCED STANDARDS 1
1.3 DEFINITIONS 2
1.4 MATERIALS 3
1.5 MANUFACTURING 4
1.6. TEST CONDITIONS 6
1.7 UNITS OF MEASURE 8
1.8 THERMAL CLASS OF MAGNET WIRE 8
1.9 ORDERING AND ENGINEERING INFORMATION 9

Part 1 TABLES

Table No.

1-1 Inch and metric equivalent dimensions for magnet wire single build, 14 to 56 AWG 10
1-2 Inch and metric equivalent dimensions for magnet wire heavy build, 14 to 50 AWG 11
1-3 Inch and metric equivalent dimensions for magnet wire triple build, 14 to 44 AWG 12
1-4 Inch and metric equivalent dimensions for magnet wire type 1 self-bonding wire, 14 to 52 AWG 13
1-5 Inch and metric equivalent dimensions for magnet wire type 2 self-bonding wire, 14 to 50 AWG 14
1-6 Inch and metric equivalent dimensions for magnet wire type 3 self-bonding wire, 16 to 30 AWG 15
1-7 Inch and metric equivalent dimensions for magnet wire single-glass-fiber-covered round bare, single-film-coated and heavy-film-coated wire 16
1-8 Inch and metric equivalent dimensions for magnet wire double-glass-fiber-covered-round bare, single-film-coated and heavy-film-coated wire 17
1-9 Inch and metric equivalent dimensions for magnet wire single-polyester-glass-fiber-covered round bare, single-film-coated and heavy-film-coated wire 18
1-10 Inch and metric equivalent dimensions for magnet wire double-polyester-glass-fiber-covered round bare, single-film-coated and heavy-film-coated wire 19
1-11 Maximum diameters for round bare wire 4 to 26 AWG 20
1-12 Round bare wire, fine sizes by resistance 20
1-13 Dimensions and radii for rectangular bare wire 21
1-14 Bare rectangular conductor tolerances 21
1-15 Comparison between AWG and IEC R-40 series bare wire diameters 22
1-16 comparison between NEMA and IEC increases and overall diameters 25
1-17 Comparison between NEMA and IEC increases and overall diameters 27

Copyright National Electrical Manufacturers Association
Provided by IHS under license with NEMA
No reproduction or networking permitted without license from IHS
Not for Resale

Table of Contents

Part 2—PROPERTIES AND REQUIREMENTS

Part 2 Section		Thermal Class	Round	Rectangular and Square	Page
MW 2-C	Polyurethane (Single and Heavy)	105	X	—	2, 4
MW 3-C	Polyurethane with Self-bonding Overcoat (Types 1 and 2)	105	X	—	6, 8
MW 5-C	Polyester (Single and Heavy)	155	X	—	10, 12
MW 6-C	Polyamide (Single and Heavy)	105	X	—	14, 16
MW 9-C	Epoxy (Single, Heavy, and Triple)	130	X	—	18, 20, 22
MW 14-C	Epoxy (Heavy and Quadruple)	130	—	X	24
MW 15-A	Polyvinyl Acetal (Single and Heavy)	105	X	—	26, 28
MW 15-C	Polyvinyl Acetal (Sgl, Hvy, and Trpl)	105	X	—	30, 32, 34
MW 16-C	Polyimide (Sgl, Hvy, Trpl, and Quad)	240	X	—	36, 38, 40, 42
MW 17-C	Polyvinyl Acetal overcoated with polyamide (Single and Heavy)	105	X	—	44, 46
MW 18-A	Polyvinyl Acetal (Heavy and Quadruple)	105	—	X	48
MW 18-C	Polyvinyl Acetal (Heavy and Quadruple)	105	—	X	50
MW 19-C	Polyvinyl Acetal with Self-Bonding overcoat (Types 1, 2, and 3)	105	X	—	52, 54, 56
MW 20-C	Polyimide (Heavy and Quadruple)	240	—	X	58
MW 24-A	Polyester (amide) (imide) overcoated with polyamide (Single and Heavy)	155	X	—	60, 62
MW 24-C	Polyester (amide) (imide) overcoated with polyamide (Single, Heavy and Triple)	155	X	—	64, 66, 68
MW 26-C	Polyester (imide) for Solderable Applications (Single and Heavy)	155	X	—	70, 72
MW 27-C	Polyester (imide) overcoated with polyamide for Solderable Applications (Single and Hvy)	155	X	—	74, 76
MW 28-A	Polyurethane overcoated with polyamide (Single and Heavy)	130	X	—	78, 80
MW 28-C	Polyurethane overcoated with polyamide (Single and Heavy)	130	X	—	82, 84
MW 29-C	Polyurethane overcoated with polyamide and self-bonding overcoated (Types 1 and 2)	105	X	—	86, 88
MW 30-C	Polyester (amide) (imide) (Single, Heavy, and Triple)	180	X	—	90, 92, 94
MW 31-C	Paper covered	90 or 105	X	—	96
MW 32-C	Double paper single cotton covered	90 or 105	—	X	98

Copyright National Electrical Manufacturers Association
Provided by IHS under license with NEMA
No reproduction or networking permitted without license from IHS

Not for Resale

Part 2 Section		Thermal Class	Round	Rectangular and Square	Page
MW 33-C	Paper covered	90 or 105	—	X	100
MW 35-A	Polyester (amide)(imide) overcoated with polyamideimide (Single and Heavy)	220	X	—	102, 104
MW 35-C	Polyester (amide)(imide) overcoated with polyamideimide (Single, Heavy and Triple)	200	X	—	106, 108, 110
MW 36-A	Polyester (amide)(imide) overcoated with polyamideimide (Heavy and Quadruple)	220	—	X	112
MW 36-C	Polyester (amide)(imide) overcoated with polyamideimide (Heavy and Quadruple)	200	—	X	114
MW 41-C	Glass fiber covered (Single and Double)	155	X	—	116, 118
MW 42-C	Glass fiber covered (Single and Double)	155	—	X	120, 124
MW 43-C	Glass fiber covered silicone treated (Single and Double)	200	—	X	128, 132
MW 44-C	Glass fiber covered silicone treated (Single and Double)	200	X	—	136, 138
MW 45-C	Polyester glass fiber covered (Single and Double)	155	X	—	140, 142
MW 46-C	Polyester glass fiber covered (Single and Double)	155	—	X	144, 148
MW 47-C	Polyester glass fiber covered silicone treated (Single and Double)	200	X	—	152, 154
MW 48-C	Polyester glass fiber covered silicone treated (Single and Double)	200	—	X	156, 160
MW 50-C	Glass fiber covered, High Temperature organic varnish treated (Single and Double)	180	X	—	164, 166
MW 51-C	Polyester glass fiber covered, High Temperature organic varnish treated (Single and Double)	180	X	—	168, 170
MW 52-C	Glass fiber covered, High Temperature organic varnish treated (Single or Double)	180	—	X	172, 176
MW 53-C	Polyester glass fiber covered, High Temperature organic varnish treated (Single and Double)	180	—	X	180, 184
MW 60-A	Aromatic polyamide paper covered (Paper)	220	—	X	188
MW 60-C	Aromatic polyamide paper covered (Paper)	220	—	X	192
MW 61-A	Aromatic polyamide paper covered (Paper)	220	X	—	196
MW 61-C	Aromatic polyamide paper covered (Paper)	220	X	—	200
MW 62-C	Aromatic Polyimide tape covered	220	—	X	204

Copyright National Electrical Manufacturers Association
Provided by IHS under license with NEMA
No reproduction or networking permitted without license from IHS

Not for Resale

Part 2 Section		Thermal Class	Round	Rectangular and Square	Page
MW 63-C	Aromatic Polyimide tape covered	220	X	—	206
MW 71-C	Polyimide for Hermetic Applications (Heavy)	220	X	—	208
MW 72-C	Polyester (amide)(imide) for Hermetic Applications (Heavy)	180	X	—	210
MW 73-A	Polyester (amide)(imide) overcoated with Polyamideimide for Hermetic Applications (Heavy)	220	X	—	212
MW 73-C	Polyester (amide)(imide) overcoated with Polyamideimide for Hermetic Applications (Heavy)	200	X	—	214
MW 74-A	Polyester (amide)(imide) (Single and Heavy)	220	X	—	216, 218
MW 74-C	Polyester (amide)(imide) (Single and Heavy)	200	X	—	220, 222
MW 75-C	Polyurethane (Single and Heavy)	130	X	—	224, 226
MW 76-A	Polyester (amide)(imide) overcoated with Polyamide (Single and Heavy)	180	X	—	228, 230
MW 76-C	Polyester (amide)(imide) overcoated with Polyamide (Single and Heavy)	180	X	—	232, 234, 236
MW 77-C	Polyester(imide) (Single and Heavy) for solderable applications	180	X	—	238, 240
MW 78-C	Polyester (imide) overcoated with Polyamide for solderable applications (Single and Heavy)	180	X	—	242, 244
MW 79-C	Polyurethane overcoated with Polyamide (Single, Heavy and Triple)	155	X	—	246, 248, 250
MW 80-C	Polyurethane overcoated with Polyamide (Single, Heavy and Triple)	155	X	—	252, 254, 256
MW 81-C	Polyamideimide (Single and Heavy)	220	X	—	258, 260
MW 82-C	Polyurethane for solderable applications, (Single, Heavy and Triple)	180	X	—	261-1, -2, -3, -4, -5, -6
MW 83-C	Polyurethane overcoated with Polyamide for solderable applications, (Single, Heavy and Triple) Film Insulated	180	X	—	261-7, -8, -9, -10, -11, -12
MW 102-A	Polyester (Amide) (Imide) overcoated with Polyamideimide and self-bonding overcoat (Type 1 and Type 2)	180	X	—	262, 264
MW 102-C	Polyester (Amide) (Imide) overcoated with Polyamideimide and self-bonding overcoat (Type 1 and Type 2)	180	X	—	266, 268

Copyright National Electrical Manufacturers Association
Provided by IHS under license with NEMA
No reproduction or networking permitted without license from IHS

Not for Resale

6470247 0514954 8T7

Table of Contents (continued)

Part 2-Tables

PROPERTIES AND REQUIREMENTS LISTING BY THERMAL CLASS, INSULATION, COATING AND FORM

Thermal Class	Insulation, Covering and Form	See Part 2, Section		
		Aluminum	Copper	Page
	FILM INSULATED ROUND MAGNET WIRE			
105	Polyamide	-	MW 6-C	14
105	Polyvinyl acetal	MW 15-A	MW 15-C	26
105	Polyvinyl acetal overcoated with polyamide	-	MW 17-C	22
105 Solderable	Polyurethane	-	MW 2-C	2
105 Self Bonding	Polyurethane and self-bonding overcoat	-	MW 3-C	6
105 Self Bonding	Polyurethane overcoated with polyamide and self-bonding overcoat	-	MW 29-C	86
105 Self Bonding	Polyvinyl acetal and self-bonding overcoat	-	MW 19-C	52
130	Epoxy	-	MW 9-C	18
130 Solderable	Polyurethane overcoated with polyamide	MW 28-A	MW 28-C	78
130 Solderable	Polyurethane	-	MW 75-C	224
155	Polyester	-	MW 5-C	10
155	Polyester (amide)(imide) overcoated with polyamide	MW 24-A	MW 24-C	60
155 Solderable	Polyester (imide)	-	MW 26-C	70
155 Solderable	Polyester (imide) overcoated with polyamide	-	MW 27-C	74
155 Solderable	Polyurethane	-	MW 79-C	246
155 Solderable	Polyurethane overcoated with polyamide	-	MW 80-C	252
180	Polyester (amide)(imide)	-	MW 30-C	90
180	Polyester (amide)(imide) overcoated with polyamide	MW 76-A	MW 76-C	228
180 Self Bonding	Polyester (amide)(imide) overcoated with polyamideimide and self-bonding overcoat	MW 102-A	MW 102-C	262
180 Solderable	Polyester (imide)	-	MW 77-C	238
180 Solderable	Polyester (imide) overcoated with polyamide	-	MW 78-C	242
180 Solderable	Polyurethane	-	MW 82-C	261-1
180 Solderable	Polyurethane overcoated with Polyamide	-	MW 83-C	261-7
180 Hermetic	Polyester (amide)(imide)	-	MW 72-C	210
200	Polyester (amide)(imide) overcoated with polyamideimide	-	MW 35-C	106
200	Polyester (amide)(imide)	-	MW 74-C	220
200 Hermetic	Polyester (amide)(imide) overcoated with polyamideimide	-	MW 73-C	214
220	Polyester (amide)(imide) overcoated with polyamideimide	MW 35-A	-	102
220	Polyester (amide)(imide)	MW 74-A	-	216
220 Hermetic	Polyimide	-	MW 71-C	208
220 Hermetic	Polyester (amide)(imide) overcoated with polyamideimide	MW 73-A		212
220	Polyimide	-	MW 81-C	258
240	Polyimide	-	MW 16-C	36
	FILM INSULATED RECTANGULAR AND SQUARE WIRE			
105	Polyvinyl acetal	MW 18-A	MW 18-C	48
130	Epoxy	-	MW 14-C	24

Copyright National Electrical Manufacturers Association
Provided by IHS under license with NEMA
No reproduction or networking permitted without license from IHS
Not for Resale

Thermal Class	Insulation, Covering and Form	See Part 2, Section		
		Aluminum	Copper	Page
200	Polyester (amide)(imide) overcoated with polyamideimide	-	MW 36-C	114
220	Polyester (amide)(imide) overcoated with polyamideimide	MW 36-A	-	112
240	Polyimide	-	MW 20-C	58
	FIBROUS COVER ROUND MAGNET WIRE			
90 or 105	Paper covered	-	MW 31-C	96
155	Glass fiber covered	-	MW 41-C	116
155	Polyester glass fiber covered	-	MW 45-C	140
180	Glass fiber covered, High temperature organic varnish treated	-	MW 50-C	164
180	Polyester glass fiber covered, High temperature organic varnish treated	-	MW 51-C	168
200	Glass fiber covered, silicone treated	-	MW 44-C	136
200	Polyester glass fiber covered, Silicone treated	-	MW 47-C	152
220	Aromatic polyamide paper covered	MW 61-A	MW 61-C	196
220	Aromatic polyimide tape covered	-	MW 63-C	206
	FIBROUS COVERED RECTANGULAR AND SQUARE MAGNET WIRE			
90 or 105	Double paper, Single cotton covered	-	MW 32-C	98
90 or 105	Paper covered	-	MW 33-C	100
155	Glass fiber covered	-	MW 42-C	120
155	Polyester glass fiber covered	-	MW 46-C	144
180	Glass fiber covered, High temperature organic varnish treated	-	MW 52-C	172
180	Polyester glass fiber covered, High temperature organic varnish treated	-	MW 53-C	180
200	Glass fiber covered, Silicone treated	-	MW 43-C	128
200	Polyester glass fiber covered, Silicone treated	-	MW 48-C	156
220	Aromatic polyamide paper covered	MW 60-A	MW 60-C	188
220	Aromatic polyimide tape covered	-	MW 62-C	204

Copyright National Electrical Manufacturers Association
Provided by IHS under license with NEMA
No reproduction or networking permitted without license from IHS
Not for Resale

6470247 0514956 67T

Table of Contents

Part 3

ROUTINE TESTS

Page

3.1 SAFETY STATEMENT 1
3.2 DIMENSIONS 1
3.3 ADHERENCE AND FLEXIBILITY 3
3.4 ELONGATION 4
3.5 HEAT SHOCK 4
3.6 (RESERVED) 5
3.7 SPRINGBACK 5
3.8 DIELECTRIC STRENGTH 8
3.9 CONTINUITY 10
3.10 COMPLETENESS OF CURE 14
3.11 RESERVED 15
3.12 COVERAGE 15
3.13 SOLDERABILITY 15

PERIODIC CONFORMANCE TESTS

3.50 THERMOPLASTIC FLOW 17
3.51 SOLUBILITY 17
3.52 DIELECTRIC STRENGTH AT RATED TEMPERATURE 19
3.53 (RESERVED) 19
3.54 TRANSFORMER OIL RESISTANCE AND HYDROLYTIC STABILITY 19
3.55 REFRIGERANT 22 EXTRACTION 20
3.56 RETAINED DIELECTRIC AFTER REFRIGERANT 22 CONDITIONS 23
3.57 BOND 24
3.58 THERMAL ENDURANCE 26
3.59 SCRAPE RESISTANCE 26

Appendix A Reference Test Conditions and Procedures for Magnet Wire A-1

Copyright National Electrical Manufacturers Association
Provided by IHS under license with NEMA
No reproduction or networking permitted without license from IHS
Not for Resale

Foreword

This publication supersedes NEMA Standards Publication MW 1000-1993. It is currently under review by ANSI for approval as an American National Standard.

The standards contained in this publication are periodically reviewed by the NEMA Magnet Wire Section for revisions considered to be necessary to keep them up to date with changes in technology. Proposed revisions should be submitted to:

Vice President, Engineering
National Electrical Manufacturers Association
1300 N. 17th Street, Suite 1847
Rosslyn, VA 22209

These standards were developed by the Magnet Wire Section of NEMA, working closely with representatives of various industries which use magnet wire. At the time they were approved, the Magnet Wire Section had the following members:

Alcatel Magnet Wire, Inc.—La Grange, KY
American Wire Corporation—Sandy Hook, CT
Bridgeport Insulated Wire Company— Bridgeport, CT
Elektrisola, Inc.— Boscawen, NH
Essex Group, Inc., Magnet Wire and Insulation Division—Fort Wayne, IN
MagneTek, Inc.— Gallman, MS
Optec D D USA, Inc.—Mexico, MO
Phelps Dodge Magnet Wire Company—Fort Wayne, IN
Rea Magnet Wire Company, Inc.—Fort Wayne, IN

Purpose

The Standards contained herein apply to round, rectangular, and square, plated or unplated, copper and aluminum magnet wire with film insulations or fibrous coverings, or a combination of both, for use in electrical apparatus. They include definitions, type designation, dimensions, constructions, performance, and methods of testing magnet wire generally used in the winding of coils for electrical apparatus.

Copyright National Electrical Manufacturers Association
Provided by IHS under license with NEMA
No reproduction or networking permitted without license from IHS
Not for Resale

How to Use This Publication

Part 1 (blue) of this publication deals with information common to all types of magnet wire, that is, ordering information, general material requirements, manufacturing data in support of thermal rating, dimensions with metric equivalents, and general test conditions and definitions. Decimal subnumbers, with the Part number shown first, separate the various types of information.

Part 2 (yellow) consists of product specifications giving dimensions and requirements for magnet wire with different types of coatings and/or coverings. Insofar as possible, the product specifications are complete on one sheet since they are arranged to include only one insulation build or covering per sheet. The title on each individual sheet identifies the product. (Example: POLYVINYL ACETAL, Single Round Copper Magnet Wire, MW 15-C. There are two more of the MW 15-C sheets to cover heavy and triple builds. MW 15-A covers the aluminum version of the same generic product).

Part 3 (green) contains the test procedures to be followed in determining compliance with the requirements given in Part 2. The tests are consolidated, with all the tests of a certain property identified by the same primary number. An index of the main test paragraphs is given on page vii of the Table of Contents.

First, review Part 1 for general information. Then in Part 2, locate the type of insulation and conductor in which you are interested. Part 2 is arranged in numerical order as shown beginning on Page ii. The proper section in Part 2 will give you the requirements to be met and will refer you to the test procedures in Part 3 to determine whether the magnet wire conforms to these requirements.

Copyright National Electrical Manufacturers Association
Provided by IHS under license with NEMA
No reproduction or networking permitted without license from IHS
Not for Resale

Part 1
GENERAL

1.1 SCOPE

This publication is designed to present, in concise and convenient form, all of the existing NEMA Standards for magnet wire. This publication is classified as a NEMA Standard unless otherwise indicated.

1.2 REFERENCED STANDARDS OR AUTHORIZED ENGINEERING INFORMATION (AEI)

In this publication, reference is made to the current revision of each of the standards or AEI listed below:

American National Standards Institute
11 West 42nd Street
New York, NY 10036

American Society for Testing Materials
100 Bar Harbor Drive
West Conshohocken, PA 19428-2959

ASTM B3	*Standard Specification for Soft or Annealed Copper Wire*
ASTM B32	*Standard Specification for Solder Metal*
ASTM B193	*Standard Test Method for Resistivity of Electrical Conductor Materials*
ASTM D149	*Standard Test Method for Dielectric Breakdown Voltage and Dielectric Strength of Solid Electrical Insulating Materials at Commercial Power Frequencies*
ASTM D1676	*Standard Methods for Testing Film-Insulated Magnet Wire*
ASTM D1711	*Standard Terminology Relating to Electrical Insulation*
ASTM D1932	*Standard Test Method for Thermal Endurance of Flexible Electrical Insulating Varnishes*
ASTM D2307	*Standard Test Method for Relative Thermal Endurance of Film-Insulated Round Magnet Wire*
ASTM D3353	*Standard Methods for Testing Fibrous-Insulated Magnet Wire*
ASTM E8	*Standard Methods of Tension Testing of Metallic Materials*
ASTM E29	*Standard Recommended Practice for Indicating Which Places of Figures Are to Be Considered Significant in Specified Limiting Values*

Institute of Electrical and Electronics Engineers
45 Hoes Lane, P.O. Box 1331
Piscataway, NJ 08855-1331

ANSI/IEEE Std 1	*General Principles for Temperature Limits in the Rating of Electric Equipment and for the Evaluation of Electrical Insulation*
ANSI/IEEE Std 4	*Techniques for High Voltage Testing*

International Electrotechnical Commission
3, rue de Varembé
Case postale 131
CH-1211 Geneva 20

IEC 317-0-1	*Winding Wires, General Requirements: Round*
IEC 317-0-2	*Winding Wires, General Requirements: Square and Rectangular*

National Institute for Standards and Technology
Gaithersburg, MD

Handbook 100	*Copper Wire Tables*

Copyright National Electrical Manufacturers Association
Provided by IHS under license with NEMA
No reproduction or networking permitted without license from IHS
Not for Resale

National Electrical Manufacturers Association
1300 North 17th Street, Suite 1847
Rosslyn, VA 22209

MW 750 (AEI)	*Dynamic Coefficient of Friction of Film-Insulated Magnet Wire*
MW 755	*Straight Flange Magnet Wire Plastic Spools/Reels*
MW 760	*Tapered Flange Magnet Wire Plastic Spools/Reels*
MW 780	*Returnable Magnet Wire Packaging Systems*
MW 785 (AEI)	*Simulated Insertion Force Test*
MW 790 (AEI)	*AC Overload Test*
MW 800 (AEI)	*Guidelines for Precautionary Labeling of Magnet Wire*

1.3 DEFINITIONS

1.3.1 Visual Examination

"Normal vision" shall be defined as 20/20 vision, with corrective lenses, if necessary.

1.3.2 Conductor

A substance used to transmit electrical current.

1.3.3 Crack in Film Coating

An opening in the coating which exposes the bare conductor to view at the magnification specified in Part 3.

1.3.4 Build

The increase in wire dimension (diameter, thickness, width) due to the insulation.

1.3.5 Covering

A fibrous or tape insulating material which is wound, wrapped, or braided around a bare or film coated conductor.

1.3.6 Film Insulated Wire

A film-coated conductor.

1.3.7 Film Coating

A continuous barrier of polymeric insulation.

1.3.8 Heavy

A reference terminology denoting standard NEMA film builds which are approximately two times the increases specified for single builds in the 14-31 AWG size range. The minimum insulation increases in mils for heavy build in the 14-31 AWG size range are described by the formula.

$$\text{Log } B_2 = 0.818 - \frac{\text{AWG}}{44.8}$$

1.3.9 Insulation

A dielectric medium which is applied to the conductor.

Copyright National Electrical Manufacturers Association
Provided by IHS under license with NEMA
No reproduction or networking permitted without license from IHS
Not for Resale

1.3.10 Magnet Wire

An insulated wire used primarily for the winding of coils in order to provide an electromagnetic field (also known as winding wire).

1.3.11 Quadruple

A reference terminology denoting the highest of four standard NEMA film builds which are based on more than three times the increases specified for single build.

1.3.12 Self-Bonding Overcoat

A material which is applied as an outer coating to insulated wire with the specified function of serving as a bonding agent.

1.3.13 Single

A reference terminology denoting the lowest of four standard NEMA film builds. The minimum insulation increases in mils for single build in the 14-31 AWG size range are described by the formula:

$$\text{Log } B_1 = 0.518 - \frac{\text{AWG}}{44.8}$$

1.3.14 Triple

A reference terminology denoting standard NEMA film builds which are approximately three times the increases specified for single builds in the 14-31 AWG size range. The minimum insulation increases in mils for triple build in the 14-31 AWG size range are described by the formula.

$$\text{Log } B_3 = 0.995 - \frac{\text{AWG}}{44.8}$$

1.3.15 Type 1 Self-Bonding

A single build insulated magnet wire with a self-bonding outer coating. The overall dimensions do not exceed the limits of heavy build.

1.3.16 Type 2 Self-Bonding

A heavy build insulated magnet wire with a self-bonding outer coating. The overall dimensions do not exceed the limits of triple build.

1.3.17 Type 3 Self-Bonding

A triple build insulated magnet wire with a self-bonding outer coating. The overall dimensions do not exceed the limits of quadruple build.

1.4 MATERIALS

1.4.1 Conductors—Round, Square and Rectangular, Copper and Aluminum

1.4.1.1 Dimensions and Resistivity

The conductor, after insulating, shall comply with the requirements given for dimensions in the applicable section in Part 2. The maximum resistivities listed in the following table correspond to a conductivity, in percent International Annealed Copper Standard (IACS) of 100 for copper, 61.8 for aluminum, and 60.6 for aluminum alloys at 20°C (68°F)(See NIST Handbook 100). While this standards publication specifies a minimum conductivity for copper of 100 percent IACS this shall not exclude the possibility of the use of coppers over 100 percent IACS. Likewise, a conductivity of 61.8 percent for aluminum and 60.6 percent for aluminum alloys shall

Copyright National Electrical Manufacturers Association
Provided by IHS under license with NEMA
No reproduction or networking permitted without license from IHS
Not for Resale

not exclude the use of aluminum or aluminum alloys with higher conductivities in either case. The current state of conductor processing has made possible the use of higher conductivity metals.

The resistivity shall be determined in accordance with ASTM B193 and shall not exceed the following values:

	Maximum Resistivity	
Conductors	**Ohm-circular mil/ft**	**Ohm-mm²/m**
Copper	10.371	0.017241
Aluminum	16.782	0.027898
Aluminum Alloys *	17.114	0.028450

* The use of aluminum alloys with a minimum conductivity 60.6% of the IACS is allowed in place of aluminum if agreed upon between the supplier and user.

1.4.1.2 Characteristics of Aluminum

The mechanical, electrical, and chemical characteristics of aluminum magnet wire differ from those of copper magnet wire because of the inherent differences in the conductor materials. These differences are reflected in certain test procedures and/or performance requirements for aluminum magnet wire, such as elongation, adherence and flexibility, heat shock, scrape resistance, continuity, and thermal endurance.

Film coated aluminum round wire sizes 10 through 14 AWG (2.59 through 1.63 mm) shall have a yield strength not less than 7,000 psi (48.3 MPa) and a tensile strength not less than 13,000 psi (89.6 MPa); sizes 15 through 25 AWG (1.450 through 0.455 mm) shall have a yield strength not less than 8,000 psi (55.2 MPa) and a tensile strength not less than 13,000 psi (89.6 MPa). Large round sizes, all rectangular film coated and all fibrous covered wire shall have a yield strength not less than 9,000 psi (62.1 MPa).

The yield strength shall be determined in accordance with the 0.2 percent offset method described in ASTM E8. The testing procedure may include a prestretch of the specimen of 0.25 percent which may remove small kinks, waves, and bends in the specimen prior to the test. (This sentence is classified as Authorized Engineering Information.)

1.4.2 Insulating Materials

1.4.2.1 Film and fibers shall conform to the latest revisions of the applicable standards of ANSI, ASTM, or NEMA.

1.4.2.2 Various resins are referred to under insulating materials in Part 2. The resins specified may be modified. A modified resin is defined as: "A resin that has undergone a chemical change, or contains one or more additives to enhance certain performance or application characteristics. It must retain the essential chemical identity of the original resin and the coated conductor must meet all specified test requirements of the appropriate MW standard."

1.4.2.3 Various resins are identified under the insulating materials headings in Part 2. These resin descriptions are given with the primary generic type listed first and optional types listed in parentheses. Combinations of the primary generic resin with one or more of those in parentheses which have been found by experience to meet all specified requirements shall also be permitted.

1.5 MANUFACTURING

1.5.1 Application of Insulation

The wire shall be coated or covered with a smooth continuous insulation and shall meet the applicable requirements in Part 2 when the wire is taken directly from the spool, reel, or container.

The film coating shall be smooth and continuous, free from streakiness, blisters, and foreign material.

When the wire is to be both film coated and fibrous or tape covered, the film-coated wire shall meet the applicable requirements of Part 2 before it is covered.

Copyright National Electrical Manufacturers Association
Provided by IHS under license with NEMA
No reproduction or networking permitted without license from IHS Not for Resale

Fibrous coverings shall be wrapped firmly, closely, evenly, and continuously around the wire. When more than one layer of fibrous covering is applied, adjacent layers shall be wound in opposite directions.

When more than one layer of tape covering is applied, adjacent layers shall be permitted to be wound in the same or in opposite directions. The relation of the degree of lapping of the tape to the number of layers of tape is shown as follows:

Degree of Lap	Equivalent Number of Tape Thickness
0	1
1/2	2
2/3	3
3/4	4

1.5.2 Intermediate Sizes

1.5.2.1 Round and Square

For wire sizes between AWG sizes, the increase in dimension due to the film coating or fibrous or tape covering shall be the same as for the next larger diameter (lower AWG size), and the test values shall be the same as for the next smaller diameter (higher AWG size).

1.5.2.2 Rectangular

The increase in dimensions due to the insulation for rectangular wires having dimensions not shown in the applicable section in Part 2 shall be the same as that specified for the next larger thickness or width.

1.5.3 Joints

Round and rectangular wire shall be in one continuous length for each spool, reel, or container. Necessary joints shall be either brazed with silver solder or welded. The number of joints shall be minimized. The surface of the wire at the joints shall be smooth and suitably insulated.

The dimensions of the wire at the joints shall be within the tolerances specified in Part 2.

For 30 AWG (0.254 mm) and heavier wire, the tensile strength of the joints shall be not less than 80 percent of the tensile strength of the wire 3 feet (914 mm) from the joint.

For 31 AWG (0.226 mm) and finer copper wire, the tensile strength of the joint shall be at least 20,000 psi (138 MPa). This strength shall be based on meeting or exceeding the yield strength of annealed copper at 0.5 percent elongation.

1.5.4 Packaging

The wire shall be wound evenly and compactly on spools or reels, or shall be deposited in containers uniformly and compactly and free from kinks. A minimum amount of neutral lubricant consistent with good packaging may be applied to the surface of film insulated wire.

The wire shall be packed in such a manner as to protect it from damage during transit in accordance with NEMA Standards MW 755, MW 760 or MW 780 as applicable.

Copyright National Electrical Manufacturers Association
Provided by IHS under license with NEMA
No reproduction or networking permitted without license from IHS
Not for Resale

1.6 TEST CONDITIONS AND PARAMETERS

1.6.1 Safety Statement

It is not the intent of this standard to address all of the safety issues associated with its use. It is the responsibility of the user of this standard to train personnel, establish proper health and safety procedures and be aware of local, state and national regulatory restrictions which may apply.

Some tests use materials which local, state, and national regulatory agencies have determined to be hazardous. These tests shall be performed under controlled conditions where the safety and protection of personnel shall be of prime consideration. Information and instructions contained in the Material Safety Data Sheets (MSDS) for handling and working with such products, shall be followed. Furthermore, discharge of these chemicals to the environment must comply with the latest applicable regulations.

Certain test procedures require high voltage. It is important that the equipment be designed to comply with relevant electrical codes. Safety must be an integral part of the design. In such cases necessary precautions must be taken and test equipment manufacturers' recommendations shall be followed.

Some tests utilizing mechanical equipment may expose the operator to mechanical hazards. Care must be exercised to protect eyes, fingers, hands, and other body parts from injury.

In tests requiring elevated temperatures, precautions must be taken in handling materials exposed to heat to avoid skin burns.

1.6.2 Selection of Specimens

If there is evidence that the wire on the surface of the package has been damaged, the damaged wire shall be discarded before specimens are taken for testing. Wire specimens shall be removed from the package in such a way as to prevent damage such as bending, stretching, kinking, etc.

As dielectric breakdown values, dissipation factor values and high voltage continuity values are affected by the presence of skin oils, acids, salts, dust, dirt, etc., care should be exercised in the handling of test specimens.

1.6.3 Ambient Conditions of Test

Unless otherwise specified, all tests shall be made at room temperature which shall be between 20°C (68°F) and 45°C (113°F).

1.6.4 Power Frequency

Tests shall be conducted using 60-hertz power unless otherwise specified.

1.6.5 Mandrels

Mandrel diameters are expressed in multiples of "d" (the nominal round bare wire diameter or thickness or width of rectangular and square bare wires). The mandrel diameter shall be expressed in decimal dimensions to the nearest mil (0.001 in.)(0.025 mm).

For diameters smaller than 30 AWG (0.0100 in.)(0.254 mm), the mandrel diameter shall not vary from the specified diameter by more than one mil (0.001 in.)(0.025 mm). For diameters equal to or larger than 30 AWG, the mandrel diameter shall not vary from the specified diameter by more than 1 percent as measured to the nearest mil (0.001 in.)(0.025 mm).

1.6.6 Rectangular Wire

References to rectangular wire in the test procedures in Part 3 include square wire unless otherwise indicated.

Copyright National Electrical Manufacturers Association
Provided by IHS under license with NEMA
No reproduction or networking permitted without license from IHS
Not for Resale

The tables of dimensions for rectangular copper and aluminum wire (Tables 1-13 and 1-14) for the applicable sections in Part 2, are based on a series of standardized size subdivisions for thickness and width known as the "Preferred Number Series."

The series has been adopted by the International Electrotechnical Commission and has been incorporated into all standards for rectangular wires of both copper and aluminum in this publication. For more information on this topic see IEC 317-0-2.

Mathematically, the preferred numbers form a geometrical series (with a constant ratio between adjacent numbers) based on the 20th or 40th root of 10. The latter is called the R-40 Series and is assigned to intermediate width values for rectangular wire. The R-20 Series (with the 20th root of 10 as the ratio) is used to define preferred wire thickness and width divisions.

Preferred number series values in inches (rounded to the nearest 0.001 inch) represent a conversion from original computations in millimeters.

1.6.7 Round Wire

1.6.7.1 AWG Size

The nominal AWG bare wire diameters, in inches, in Table 1-15 were calculated using the basic mathematical characteristics of the American Wire Gauge:

$$X = (0.0050)(1.1229322)^{(36-N)}$$

Where:

X = nominal bare wire diameter in inches
0.0050 = nominal base diameter in inches for 36 AWG
1.1229322 = $\sqrt[39]{92}$ = the ratio of the diameter of any AWG size to the (smaller) diameter of the next larger AWG size.
36 = the AWG number of the base diameter
N = the AWG number of X, the unknown diameter
For sizes 4/0 to 2/0 AWG, N is a negative number from -3 to -1.

1.6.7.2 Maximum Bare Dimensions

The maximum bare wire diameter dimenions given in Part 2 (Sizes 4 through 26 AWG) shall be permitted to be exceeded (see Table 1-11), provided:

a. the maximum diameter specified in Table 1-11 is not exceeded
b. the minimum increase in diameter specified in Part 2 is maintained
c. the maximum overall diameter specified in Part 2 is not exceeded

1.6.7.3 Theoretical Bare Diameters 45-56 AWG

Theoretical nominal bare wire diameters for 45 through 56 AWG copper wire are in accordance with ASTM B3. Conductor diameter tolerances in the applicable sections in Part 2 are shown as resistance values and shall be determined by measuring resistance of the wire in accordance with ASTM B193.

1.6.7.4 Comparison Between AWG and IEC R-40 Series

Table 1-15 illustrates the relationship between the metric diameters in millimeters based on the IEC R-40 Series and the diameter of AWG sizes converted to millimeters. For more information on the this topic see IEC 317-0-1.

Copyright National Electrical Manufacturers Association
Provided by IHS under license with NEMA
No reproduction or networking permitted without license from IHS
Not for Resale

1.6.8 Periodic Conformance

Periodic conformance tests as described in Part 3 (numbered 3.50 and higher) are performed at extended intervals. This assures continuing levels of certain inherent properties of materials and processes.

1.6.9 Retests

Unless otherwise indicated in Parts 2 or 3, the test or tests under which a wire fails shall be repeated twice, and the wire shall be regarded as meeting the requirements of these standards if the results of both additional tests are satisfactory.

1.7 UNITS OF MEASURE

(This Section and its subparagraphs are classified as Authorized Engineering Information.)

In these standards, units are expressed in the inch-pound system, however temperatures are given in degrees Celsius. Where their approximate metric equivalents are included, they are given as information only. For direct conversion of inches to millimeters, multiply inches by the factor 25.4 (exact).

The tables in Part 1 list the dimensions and metric equivalents for the range of sizes used in Part 2.

The practice of rounding off numerical values is in accordance with ASTM E29.

All product dimensions listed in this publication are significant only to the number of digits shown to the right of the decimal point.

1.8 THERMAL CLASS OF MAGNET WIRE

The thermal class of magnet wire shall be based upon:

a. Temperature index in accordance with 3.58
b. Heat shock capability as required in individual sections in Part 2. The heat shock capability shall be at least 20 °C higher than the temperature class as required in individual sections in Part 2.

The thermal class given in each product section of Part 2 is the class of the magnet wire and is not intended to be the class of the electrical equipment in which the wire is used.

It is expected that the magnet wire producer will supply the user, upon request, with test data in support of the thermal class of the magnet wire offered as meeting the requirements of Part 2 of this publication. This data shall be in accord with the provisions of ASTM D2307.

The tests described in ASTM D2307 are considered as design tests on a given insulation composition. It is not intended that they will be performed as production tests or on individual shipments.

1.8.1 Copper at Elevated Temperatures

Copper will oxidize at an increasing rate at temperatures of 200 °C and above and will also pit and become brittle at such temperatures. This oxidation will eventually damage the coating and failure of the winding may result. Where extended life is desirable at temperatures exceeding 200 °C, it is advisable to protect the copper conductor with a material such as silver or nickel, provided the material is compatible with the coating or covering.

1.8.2 Aluminum Magnet Wire

Aluminum magnet wire products typically exhibits a 20 °C higher thermal index and different heat shock properties in comparison with film coated copper magnet wire. These differences should be considered when assigning the thermal class to film coated aluminum magnet wire.

Copyright National Electrical Manufacturers Association
Provided by IHS under license with NEMA
No reproduction or networking permitted without license from IHS
Not for Resale

1.9 ORDERING AND ENGINEERING INFORMATION

1.9.1 Product Identification Number

When a description of an individual magnet wire product is needed the following format shall be used: the MW designation shall occupy the first two spaces, the type of insulation based on the NEMA MW specification shall occupy the 3rd through 5th spaces, the conductor type shall occupy the 6th space, the insulation build shall occupy the 7th space, additional information about the insulation (e.g. single fiber) shall occupy the 8th space, the size description shall occupy the 9th through 14th spaces. In the case of ½ sizes, a decimal point is used in the thirteenth place and a five in the fourteenth place. The external lubricant type shall occupy the 15th space. Please refer to the NEMA MW Product Identification Number (PIN) Table for more detailed information for use in developing NEMA Product Identification Numbers.

NEMA MW Product Identification Number Table

PIN Column Information	NEMA MW Symbol	Type of Insulation	Type of Conductor	Insulation Build	Additional Insulation Information	Size	Type of Lubricant
PIN Spaces	2	3	1	1	1	6	1
PIN Position	1-2	3-5	6	7	8	9-14	15
PIN Data	MW	NEMA MW Standard (Number)	C- Copper A- Aluminum	B - Bare S - Single H - Heavy T - Triple Q - Quad 1 - Type 1 2 - Type 2 3 - Type 3	x - film coated only a - single glass fiber b - double glass fiber c - single polyester glass fiber d - double polyester glass fiber e - single tape .002" 0 to 1/2 lap f - single tape .002" 1/2 to 2/3 lap g -double tape .002" 0 to 1/2 lap h -double tape .002" 1/2 to 2/3 lap i - single tape .003" 0 to 1/2 lap j -single tape .003" 1/2 to 2/3 lap k - single tape 1/2 to 2/3 lap l - double tape 1/2 to 2/3 lap n - double paper single cotton	Round -start at far right with last digit. Square Actual Size (Decimal Nom. Bare x 1000) Rectangular Actual Size (Decimal Nom. Bare x 1000)	p - dry lube o - mineral oil s- special n- no lube u – unspecified

Examples: An 18 AWG Round Single Build MW 80-C with dry lubrication would have a PIN of: MW080CSx000018p
A 16½ AWG Round Heavy Build MW 35-C with dry lube would have a PIN of: MW035CHx0016.5p
A 6 AWG Square Heavy Build MW 36-C with oil lubrication would have a PIN of : MW036CHx162162o
A 0.100" x 0.230" Single Glass Fiber over Heavy Film, MW 42-C would have a PIN of : MW042CHa100230n

1.9.2 Ordering Information

Orders for materials under these standards should include the following information:

a. Quantity: total number of pounds (kilograms)
b. Product Identification Number (Part Number)
c. Packaging: spools, reels, or containers per NEMA MW 755, MW 760 or MW 780 as applicable
d. Other requirements as agreed to between supplier and user

Copyright National Electrical Manufacturers Association
Provided by IHS under license with NEMA
No reproduction or networking permitted without license from IHS
Not for Resale

Table 1-1
INCH AND METRIC EQUIVALENT DIMENSIONS FOR MAGNET WIRE
SINGLE BUILD, 14 TO 56 AWG

AWG	Bare Wire Diameter						Minimum Increase in Diameter		Maximum Overall Diameter		AWG
	Minimum		Nominal		Maximum						
Size	inches	mm	inches	mm	inches	mm	inches	mm	inches	mm	Size
14	0.0635	1.613	0.0641	1.628	0.0644*	1.636*	0.0016	0.041	0.0666	1.692	14
15	0.0565	1.435	0.0571	1.450	0.0574*	1.458*	0.0015	0.038	0.0594	1.509	15
16	0.0503	1.278	0.0508	1.290	0.0511*	1.298*	0.0014	0.036	0.0531	1.349	16
17	0.0448	1.138	0.0453	1.151	0.0455*	1.156*	0.0014	0.036	0.0475	1.203	17
18	0.0399	1.013	0.0403	1.024	0.0405*	1.029*	0.0013	0.033	0.0424	1.077	18
19	0.0355	0.902	0.0359	0.912	0.0361*	0.917*	0.0012	0.030	0.0379	0.963	19
20	0.0317	0.805	0.0320	0.813	0.0322*	0.818*	0.0012	0.030	0.0339	0.861	20
21	0.0282	0.716	0.0285	0.724	0.0286*	0.726*	0.0011	0.028	0.0303	0.770	21
22	0.0250	0.635	0.0253	0.643	0.0254*	0.645*	0.0011	0.028	0.0270	0.686	22
23	0.0224	0.569	0.0226	0.574	0.0227*	0.577*	0.0010	0.025	0.0243	0.617	23
24	0.0199	0.505	0.0201	0.511	0.0202*	0.513*	0.0010	0.025	0.0217	0.551	24
25	0.0177	0.450	0.0179	0.455	0.0180*	0.457*	0.0009	0.023	0.0194	0.493	25
26	0.0157	0.399	0.0159	0.404	0.0160*	0.406*	0.0009	0.023	0.0173	0.439	26
27	0.0141	0.358	0.0142	0.361	0.0143	0.363	0.0008	0.020	0.0156	0.396	27
28	0.0125	0.318	0.0126	0.320	0.0127	0.323	0.0008	0.020	0.0140	0.356	28
29	0.0112	0.284	0.0113	0.287	0.0114	0.290	0.0007	0.018	0.0126	0.320	29
30	0.0099	0.251	0.0100	0.254	0.0101	0.257	0.0007	0.018	0.0112	0.284	30
31	0.0088	0.224	0.0089	0.226	0.0090	0.229	0.0006	0.015	0.0100	0.254	31
32	0.0079	0.201	0.0080	0.203	0.0081	0.206	0.0006	0.015	0.0091	0.231	32
33	0.0070	0.178	0.0071	0.180	0.0072	0.183	0.0005	0.013	0.0081	0.206	33
34	0.0062	0.157	0.0063	0.160	0.0064	0.163	0.0005	0.013	0.0072	0.183	34
35	0.0055	0.140	0.0056	0.142	0.0057	0.145	0.0004	0.010	0.0064	0.163	35
36	0.0049	0.124	0.0050	0.127	0.0051	0.130	0.0004	0.010	0.0058	0.147	36
37	0.0044	0.112	0.0045	0.114	0.0046	0.117	0.0003	0.008	0.0052	0.132	37
38	0.0039	0.099	0.0040	0.102	0.0041	0.104	0.0003	0.008	0.0047	0.119	38
39	0.0034	0.086	0.0035	0.089	0.0036	0.091	0.0002	0.005	0.0041	0.104	39
40	0.0030	0.076	0.0031	0.079	0.0032	0.081	0.0002	0.005	0.0037	0.094	40
41	0.0027	0.069	0.0028	0.071	0.0029	0.074	0.0002	0.005	0.0033	0.084	41
42	0.0024	0.061	0.0025	0.061	0.0026	0.066	0.0002	0.005	0.0030	0.076	42
43	0.0021	0.053	0.0022	0.056	0.0023	0.058	0.0002	0.005	0.0026	0.066	43
44	0.0019	0.048	0.0020	0.051	0.0021	0.053	0.0001	0.0025	0.0024	0.061	44
			Theoretical Nominal Bare Diameter ‡								
			inches	mm							
45			0.00176	0.0447			0.00010	0.0025	0.00005	0.0521	45
46			0.00157	0.0399			0.00010	0.0025	0.00185	0.0470	46
47			0.00140	0.0356			0.00010	0.0025	0.00170	0.0432	47
48			0.00124	0.0315			0.00010	0.0025	0.00150	0.0381	48
49			0.00111	0.0282			0.00010	0.0025	0.00130	0.0330	49
50			0.00099	0.0251			0.00010	0.0025	0.00120	0.0305	50
51			0.00088	0.0224			0.00010	0.0025	0.00110	0.0279	51
52			0.00078	0.0198			0.00010	0.0025	0.00100	0.0251	52
53			0.00070	0.0178			0.00005	0.0013	0.00085	0.0216	53
54			0.00062	0.0157			0.00005	0.0013	0.00075	0.0190	54
55			0.00055	0.0140			0.00005	0.0013	0.00070	0.0178	55
56			0.00049	0.0124			0.00005	0.0013	0.00065	0.0165	56

* This bare wire diameter shall be permitted to be exceeded; see 1.6.7.2
‡ Theoretical nominal bare wire diameter by resistance; see 1.6.7.3.
See Table 1-12 for resistance metric equivalents.

Copyright National Electrical Manufacturers Association
Provided by IHS under license with NEMA
No reproduction or networking permitted without license from IHS
Not for Resale

Table 1-2
INCH AND METRIC EQUIVALENT DIMENSIONS FOR MAGNET WIRE
HEAVY BUILD, 4 TO 50 AWG

AWG	Bare Wire Diameter						Minimum Increase in Diameter		Maximum Overall Diameter		AWG
	Minimum		Nominal		Maximum						
Size	inches	mm	inches	mm	inches	mm	inches	mm	inches	mm	Size
4	0.2023	5.138	0.2043	5.189	0.2053*	5.215*	0.0037	0.094	0.2098	5.329	4
5	0.1801	4.575	0.1819	4.620	0.1828*	4.643*	0.0036	0.091	0.1872	4.755	5
6	0.1604	4.074	0.1620	4.115	0.1628*	4.135*	0.0035	0.089	0.1671	4.244	6
7	0.1429	3.630	0.1443	3.665	0.1450*	3.683*	0.0034	0.086	0.1491	3.727	7
8	0.1272	3.231	0.1285	3.264	0.1292*	3.282*	0.0033	0.084	0.1332	3.383	8
9	0.1133	2.878	0.1144	2.906	0.1150*	2.921*	0.0032	0.081	0.1189	3.020	9
10	0.1009	2.563	0.1019	2.588	0.1024*	2.601*	0.0031	0.079	0.1061	2.695	10
11	0.0898	2.281	0.0907	2.304	0.0912*	2.316*	0.0030	0.076	0.0948	2.408	11
12	0.0800	2.032	0.0808	2.052	0.0812*	2.062*	0.0029	0.074	0.0847	2.151	12
13	0.0713	1.811	0.0720	1.829	0.0724*	1.839*	0.0028	0.071	0.0757	1.923	13
14	0.0635	1.613	0.0641	1.628	0.0644*	1.636*	0.0032	0.081	0.0682	1.732	14
15	0.0565	1.435	0.0571	1.450	0.0574*	1.458*	0.0030	0.076	0.0609	1.547	15
16	0.0503	1.278	0.0508	1.290	0.0511*	1.298*	0.0029	0.074	0.0545	1.384	16
17	0.0448	1.138	0.0453	1.151	0.0455*	1.156*	0.0028	0.071	0.0488	1.240	17
18	0.0399	1.013	0.0403	1.024	0.0405*	1.029*	0.0026	0.066	0.0437	1.110	18
19	0.0355	0.902	0.0359	0.912	0.0361*	0.917*	0.0025	0.064	0.0391	0.993	19
20	0.0317	0.805	0.0320	0.813	0.0322*	0.818*	0.0023	0.058	0.0351	0.892	20
21	0.0282	0.716	0.0285	0.724	0.0286*	0.726*	0.0022	0.056	0.0314	0.798	21
22	0.0250	0.635	0.0253	0.643	0.0254*	0.645*	0.0021	0.053	0.0281	0.714	22
23	0.0224	0.569	0.0226	0.574	0.0227*	0.577*	0.0020	0.051	0.0253	0.643	23
24	0.0199	0.505	0.0201	0.511	0.0202*	0.513*	0.0019	0.048	0.0227	0.577	24
25	0.0177	0.450	0.0179	0.455	0.0180*	0.457*	0.0018	0.046	0.0203	0.516	25
26	0.0157	0.399	0.0159	0.404	0.0160*	0.406*	0.0017	0.043	0.0182	0.462	26
27	0.0141	0.358	0.0142	0.361	0.0143	0.363	0.0016	0.041	0.0164	0.417	27
28	0.0125	0.318	0.0126	0.320	0.0127	0.323	0.0016	0.041	0.0147	0.373	28
29	0.0112	0.284	0.0113	0.287	0.0144	0.290	0.0015	0.038	0.0133	0.338	29
30	0.0099	0.251	0.0100	0.254	0.0101	0.257	0.0014	0.036	0.0119	0.302	30
31	0.0088	0.224	0.0089	0.226	0.0090	0.229	0.0013	0.033	0.0108	0.274	31
32	0.0079	0.201	0.0080	0.203	0.0081	0.206	0.0012	0.030	0.0098	0.249	32
33	0.0070	0.178	0.0071	0.180	0.0072	0.183	0.0011	0.028	0.0088	0.224	33
34	0.0062	0.157	0.0063	0.160	0.0064	0.163	0.0010	0.025	0.0078	0.198	34
35	0.0055	0.140	0.0056	0.142	0.0057	0.145	0.0009	0.023	0.0070	0.178	35
36	0.0049	0.124	0.0050	0.127	0.0051	0.130	0.0008	0.020	0.0063	0.160	36
37	0.0044	0.112	0.0045	0.114	0.0046	0.117	0.0008	0.020	0.0057	0.145	37
38	0.0039	0.099	0.0040	0.102	0.0041	0.104	0.0007	0.018	0.0051	0.130	38
39	0.0034	0.086	0.0035	0.089	0.0036	0.091	0.0006	0.015	0.0045	0.114	39
40	0.0030	0.076	0.0031	0.079	0.0032	0.081	0.0006	0.015	0.0040	0.102	40
41	0.0027	0.069	0.0028	0.071	0.0029	0.074	0.0005	0.013	0.0036	0.091	41
42	0.0024	0.061	0.0025	0.064	0.0026	0.066	0.0004	0.010	0.0032	0.081	42
43	0.0021	0.053	0.0022	0.056	0.0023	0.058	0.0004	0.010	0.0029	0.074	43
44	0.0019	0.048	0.0020	0.051	0.0021	0.053	0.0004	0.010	0.0027	0.069	44
			Theoretical Nominal Bare Diameter ‡								
			inches	mm							
45			0.00176	0.0447			0.0003	0.0076	0.0023	0.0584	45
46			0.00157	0.0399			0.0003	0.0076	0.0021	0.0533	46
47			0.00140	0.0356			0.0003	0.0076	0.0019	0.0483	47
48			0.00124	0.0315			0.0002	0.0051	0.0017	0.0432	48
49			0.00111	0.0282			0.0002	0.0051	0.0015	0.0381	49
50			0.00099	0.0251			0.0002	0.0051	0.0014	0.0356	50

* This bare wire diameter shall be permitted to be exceeded. See 1.6.7.2

‡ Theoretical nominal bare wire diameter by resistance, see 1.6.7.3.

See Table 1-12 for resistance metric equivalents.

Copyright National Electrical Manufacturers Association
Provided by IHS under license with NEMA
No reproduction or networking permitted without license from IHS

Not for Resale

Table 1-3
INCH AND METRIC EQUIVALENT DIMENSIONS FOR MAGNET WIRE
TRIPLE BUILD, 14 TO 44 AWG

AWG	Bare Wire Diameter						Minimum Increase in Diameter		Maximum Overall Diameter		AWG
	Minimum		Nominal		Maximum						
Size	inches	mm	inches	mm	inches	mm	inches	mm	inches	mm	Size
14	0.0635	1.613	0.0641	1.628	0.0644*	1.636*	0.0048	0.122	0.0700	1.778	14
15	0.0565	1.435	0.0571	1.450	0.0574*	1.458*	0.0045	0.114	0.0627	1.593	15
16	0.0503	1.278	0.0508	1.290	0.0511*	1.298*	0.0043	0.109	0.0562	1.427	16
17	0.0448	1.138	0.0453	1.151	0.0455*	1.156*	0.0041	0.104	0.0504	1.280	17
18	0.0399	1.013	0.0403	1.024	0.0405*	1.029*	0.0039	0.099	0.0452	1.148	18
19	0.0355	0.902	0.0359	0.912	0.0361*	0.917*	0.0037	0.094	0.0406	1.031	19
20	0.0317	0.805	0.0320	0.813	0.0322*	0.818*	0.0035	0.089	0.0364	0.925	20
21	0.0282	0.716	0.0285	0.724	0.0286*	0.726*	0.0033	0.084	0.0326	0.828	21
22	0.0250	0.635	0.0253	0.643	0.0254*	0.645*	0.0032	0.081	0.0293	0.744	22
23	0.0224	0.569	0.0226	0.574	0.0227*	0.577*	0.0030	0.076	0.0264	0.671	23
24	0.0199	0.505	0.0201	0.511	0.0202*	0.513*	0.0029	0.074	0.0238	0.605	24
25	0.0177	0.450	0.0179	0.455	0.0180*	0.457*	0.0027	0.069	0.0214	0.544	25
26	0.0157	0.399	0.0159	0.404	0.0160*	0.406*	0.0026	0.066	0.0193	0.490	26
27	0.0141	0.358	0.0142	0.361	0.0143	0.363	0.0024	0.061	0.0173	0.439	27
28	0.0125	0.318	0.0126	0.320	0.0127	0.323	0.0023	0.058	0.0156	0.396	28
29	0.0112	0.284	0.0113	0.287	0.0114	0.290	0.0022	0.056	0.0142	0.361	29
30	0.0099	0.251	0.0100	0.254	0.0101	0.257	0.0021	0.053	0.0128	0.325	30
31	0.0088	0.224	0.0089	0.226	0.0090	0.229	0.0017	0.043	0.0114	0.289	31
32	0.0079	0.201	0.0080	0.203	0.0081	0.206	0.0016	0.039	0.0103	0.261	32
33	0.0070	0.178	0.0071	0.180	0.0072	0.183	0.0014	0.036	0.0092	0.234	33
34	0.0062	0.157	0.0063	0.160	0.0064	0.163	0.0013	0.033	0.0082	0.209	34
35	0.0055	0.140	0.0056	0.142	0.0057	0.145	0.0012	0.030	0.0074	0.188	35
36	0.0049	0.124	0.0050	0.127	0.0051	0.130	0.0011	0.028	0.0067	0.169	36
37	0.0044	0.112	0.0045	0.114	0.0046	0.117	0.0010	0.026	0.0060	0.153	37
38	0.0039	0.099	0.0040	0.102	0.0041	0.104	0.0009	0.023	0.0054	0.137	38
39	0.0034	0.086	0.0035	0.089	0.0036	0.091	0.0008	0.022	0.0048	0.122	39
40	0.0030	0.076	0.0031	0.079	0.0032	0.081	0.0008	0.020	0.0043	0.109	40
41	0.0027	0.069	0.0028	0.071	0.0059	0.074	0.0007	0.018	0.0039	0.099	41
42	0.0024	0.061	0.0025	0.064	0.0026	0.066	0.0007	0.017	0.0035	0.090	42
43	0.0021	0.053	0.0022	0.056	0.0023	0.058	0.0006	0.015	0.0032	0.080	43
44	0.0019	0.048	0.0020	0.051	0.0021	0.053	0.0006	0.014	0.0029	0.073	44

* This bare wire diameter shall be permitted to be exceeded. See 1.6.7.2

Copyright National Electrical Manufacturers Association
Provided by IHS under license with NEMA
No reproduction or networking permitted without license from IHS
Not for Resale

Table 1-4
INCH AND METRIC EQUIVALENT DIMENSIONS FOR MAGNET WIRE
TYPE 1 SELF-BONDING WIRE, 14 TO 52 AWG

AWG Size	Bare Wire Diameter						Minimum Increase in Diameter				Maximum Overall Diameter		AWG Size
	Minimum		Nominal		Maximum		Film Coating		Self-Bonding Overcoat				
	inches	mm	inches	mm	inches	mm	inches	mm	inches	mm	inches	mm	
14	0.0635	1.613	0.0641	1.628	0.0644*	1.636*	0.0016	0.041	0.0006	0.015	0.0682	1.732	14
15	0.0565	1.435	0.0571	1.450	0.0574*	1.458*	0.0015	0.038	0.0006	0.015	0.0609	1.547	15
16	0.0503	1.278	0.0508	1.290	0.0511*	1.298*	0.0014	0.036	0.0006	0.015	0.0545	1.384	16
17	0.0448	1.138	0.0453	1.151	0.0455*	1.156*	0.0014	0.036	0.0006	0.015	0.0488	1.240	17
18	0.0399	1.013	0.0403	1.024	0.0405*	1.029*	0.0013	0.033	0.0006	0.015	0.0437	1.110	18
19	0.0355	0.902	0.0359	0.912	0.0361*	0.917*	0.0012	0.030	0.0006	0.015	0.0391	0.993	19
20	0.0317	0.805	0.0320	0.813	0.0322*	0.818*	0.0012	0.030	0.0005	0.013	0.0351	0.892	20
21	0.0282	0.716	0.0285	0.724	0.0286*	0.726*	0.0011	0.028	0.0005	0.013	0.0314	0.798	21
22	0.0250	0.635	0.0253	0.643	0.0254*	0.645*	0.0011	0.028	0.0005	0.013	0.0281	0.714	22
23	0.0224	0.569	0.0226	0.574	0.0227*	0.577*	0.0010	0.025	0.0005	0.013	0.0253	0.643	23
24	0.0119	0.505	0.0201	0.511	0.0202*	0.513*	0.0010	0.025	0.0005	0.013	0.0227	0.577	24
25	0.0177	0.450	0.0179	0.455	0.0180*	0.457*	0.0009	0.023	0.0005	0.013	0.0203	0.516	25
26	0.0157	0.399	0.0159	0.404	0.0160*	0.406*	0.0009	0.023	0.0005	0.013	0.0182	0.462	26
27	0.0141	0.358	0.0142	0.361	0.0143	0.363	0.0008	0.020	0.0005	0.013	0.0164	0.417	27
28	0.0125	0.318	0.0126	0.320	0.0127	0.323	0.0008	0.020	0.0005	0.013	0.0147	0.373	28
29	0.0112	0.284	0.0113	0.287	0.0114	0.290	0.0007	0.018	0.0004	0.010	0.0133	0.338	29
30	0.0099	0.251	0.0100	0.254	0.0101	0.257	0.0007	0.018	0.0004	0.010	0.0119	0.302	30
31	0.0088	0.224	0.0089	0.226	0.0090	0.229	0.0006	0.015	0.0004	0.010	0.0108	0.274	31
32	0.0079	0.201	0.0080	0.203	0.0081	0.206	0.0006	0.015	0.0004	0.010	0.0098	0.249	32
33	0.0070	0.178	0.0071	0.180	0.0072	0.183	0.0005	0.013	0.0004	0.010	0.0088	0.224	33
34	0.0062	0.157	0.0063	0.160	0.0064	0.163	0.0005	0.013	0.0003	0.008	0.0078	0.198	34
35	0.0055	0.140	0.0056	0.142	0.0057	0.145	0.0004	0.010	0.0003	0.008	0.0070	0.178	35
36	0.0049	0.124	0.0050	0.127	0.0051	0.130	0.0004	0.010	0.0003	0.008	0.0063	0.160	36
37	0.0044	0.112	0.0045	0.114	0.0046	0.117	0.0003	0.008	0.0003	0.008	0.0057	0.145	37
38	0.0039	0.099	0.0040	0.102	0.0041	0.104	0.0003	0.008	0.0002	0.005	0.0051	0.130	38
39	0.0034	0.086	0.0035	0.089	0.0036	0.091	0.0002	0.005	0.0002	0.005	0.0045	0.114	39
40	0.0030	0.076	0.0031	0.079	0.0032	0.081	0.0002	0.005	0.0002	0.005	0.0040	0.102	40
41	0.0027	0.069	0.0028	0.071	0.0029	0.074	0.0002	0.005	0.0002	0.005	0.0036	0.091	41
42	0.0024	0.061	0.0025	0.064	0.0026	0.066	0.0002	0.005	0.0002	0.005	0.0032	0.081	42
43	0.0021	0.053	0.0022	0.056	0.0023	0.058	0.0002	0.005	0.0001	0.0025	0.0029	0.074	43
44	0.0019	0.048	0.0020	0.051	0.0021	0.053	0.0001	0.0025	0.0001	0.0025	0.0027	0.069	44
			Theoretical Nom. Bare Diameter ‡										
			inches	mm									
45			0.00176	0.0447			0.0001	0.0025	0.0001	0.0025	0.0023	0.0584	45
46			0.00157	0.0399			0.0001	0.0025	0.0001	0.0025	0.0021	0.0533	46
47			0.00140	0.0356			0.0001	0.0025	0.0001	0.0025	0.0019	0.0483	47
48			0.00124	0.0315			0.0001	0.0025	0.0001	0.0025	0.0017	0.0432	48
49			0.00111	0.0282			0.0001	0.0025	0.0001	0.0025	0.0015	0.0381	49
50			0.00099	0.0251			0.0001	0.0025	0.0001	0.0025	0.0014	0.0356	50
51			0.00088	0.0224			0.0001	0.0025	0.0001	0.0025	0.0013	0.0330	51
52			0.00078	0.0198			0.0001	0.0025	0.00005	0.0013	0.00115	0.0292	52

* This bare wire diameter shall be permitted to be exceeded, see 1.6.7.2

‡ Theoretical nominal bare wire diameter by resistance, see 1.6.7.3

See Table 1-12 for resistance metric equivalents.

Copyright National Electrical Manufacturers Association
Provided by IHS under license with NEMA
No reproduction or networking permitted without license from IHS

Not for Resale

Table 1-5
INCH AND METRIC EQUIVALENT DIMENSIONS FOR MAGNET WIRE
TYPE 2 SELF-BONDING WIRE, 14 TO 50 AWG

AWG Size	Bare Wire Diameter						Minimum Increase in Diameter				Maximum Overall Diameter		AWG Size
	Minimum		Nominal		Maximum		Film Coating		Self-Bonding Overcoat				
	inches	mm	inches	mm	inches	mm	inches	mm	inches	mm	inches	mm	
14	0.0635	1.613	0.0641	1.628	0.0644*	1.636*	0.0032	0.081	0.0006	0.015	0.0700	1.778	14
15	0.0565	1.435	0.0571	1.450	0.0574*	1.458*	0.0030	0.076	0.0006	0.015	0.0627	1.593	15
16	0.0503	1.278	0.0508	1.290	0.0511*	1.298*	0.0029	0.074	0.0006	0.015	0.0562	1.427	16
17	0.0448	1.138	0.0453	1.151	0.0455*	1.156*	0.0028	0.071	0.0006	0.015	0.0504	1.280	17
18	0.0399	1.013	0.0403	1.024	0.0405*	1.029*	0.0026	0.066	0.0006	0.015	0.0452	1.148	18
19	0.0355	0.902	0.0359	0.912	0.0361*	0.917*	0.0025	0.064	0.0006	0.015	0.0406	1.031	19
20	0.0317	0.805	0.0320	0.813	0.0322*	0.818*	0.0023	0.058	0.0005	0.013	0.0364	0.925	20
21	0.0282	0.716	0.0285	0.724	0.0286*	0.726*	0.0022	0.056	0.0005	0.013	0.0326	0.828	21
22	0.0250	0.635	0.0253	0.643	0.0254*	0.645*	0.0021	0.053	0.0005	0.013	0.0293	0.744	22
23	0.0224	0.569	0.0226	0.574	0.0227*	0.577*	0.0020	0.051	0.0005	0.013	0.0264	0.671	23
24	0.0119	0.505	0.0201	0.511	0.0202*	0.513*	0.0019	0.048	0.0005	0.013	0.0238	0.605	24
25	0.0177	0.450	0.0179	0.455	0.0180*	0.457*	0.0018	0.046	0.0005	0.013	0.0214	0.544	25
26	0.0157	0.399	0.0159	0.404	0.0160*	0.406*	0.0017	0.043	0.0005	0.013	0.0193	0.490	26
27	0.0141	0.358	0.0142	0.361	0.0143	0.363	0.0016	0.041	0.0005	0.013	0.0173	0.439	27
28	0.0125	0.318	0.0126	0.320	0.0127	0.323	0.0016	0.041	0.0005	0.013	0.0156	0.396	28
29	0.0112	0.284	0.0113	0.287	0.0114	0.290	0.0015	0.038	0.0004	0.010	0.0142	0.361	29
30	0.0099	0.251	0.0100	0.254	0.0101	0.257	0.0014	0.036	0.0004	0.010	0.0128	0.325	30
31	0.0088	0.224	0.0089	0.226	0.0090	0.229	0.0013	0.033	0.0004	0.010	0.0115	0.292	31
32	0.0079	0.201	0.0080	0.203	0.0081	0.206	0.0012	0.030	0.0004	0.010	0.0102	0.267	32
33	0.0070	0.178	0.0071	0.180	0.0072	0.183	0.0011	0.028	0.0004	0.010	0.0095	0.241	33
34	0.0062	0.157	0.0063	0.160	0.0064	0.163	0.0010	0.025	0.0003	0.008	0.0084	0.213	34
35	0.0055	0.140	0.0056	0.142	0.0057	0.145	0.0009	0.023	0.0003	0.008	0.0076	0.193	35
36	0.0049	0.124	0.0050	0.127	0.0051	0.130	0.0008	0.020	0.0003	0.008	0.0069	0.175	36
37	0.0044	0.112	0.0045	0.114	0.0046	0.117	0.0008	0.020	0.0003	0.008	0.0062	0.157	37
38	0.0039	0.099	0.0040	0.102	0.0041	0.104	0.0007	0.018	0.0002	0.005	0.0056	0.142	38
39	0.0034	0.086	0.0035	0.089	0.0036	0.091	0.0006	0.015	0.0002	0.005	0.0050	0.127	39
40	0.0030	0.076	0.0031	0.079	0.0032	0.081	0.0006	0.015	0.0002	0.005	0.0044	0.112	40
41	0.0027	0.069	0.0028	0.071	0.0029	0.074	0.0005	0.013	0.0002	0.005	0.0040	0.102	41
42	0.0024	0.061	0.0025	0.064	0.0026	0.066	0.0004	0.010	0.0002	0.005	0.0037	0.094	42
43	0.0021	0.053	0.0022	0.056	0.0023	0.058	0.0004	0.010	0.0001	0.0025	0.0033	0.084	43
44	0.0019	0.048	0.0020	0.051	0.0021	0.053	0.0004	0.010	0.0001	0.0025	0.0030	0.076	44

AWG Size	Theoretical Nom. Bare Diameter ‡		Minimum Increase in Diameter				Maximum Overall Diameter		AWG Size
			Film Coating		Self-Bonding Overcoat				
	inches	mm	inches	mm	inches	mm	inches	mm	
45	0.00176	0.0447	0.0003	0.0076	0.0001	0.0025	0.0025	0.0648	45
46	0.00157	0.0399	0.0003	0.0076	0.0001	0.0025	0.0023	0.0597	46
47	0.00140	0.0356	0.0003	0.0076	0.0001	0.0025	0.0021	0.0533	47
48	0.00124	0.0315	0.0002	0.0051	0.0001	0.0025	0.0018	0.0470	48
49	0.00111	0.0282	0.0002	0.0051	0.0001	0.0025	0.0017	0.0432	49
50	0.00099	0.0251	0.0002	0.0051	0.0001	0.0025	0.0016	0.0406	50

* This bare wire diameter shall be permitted to be exceeded; see 1.6.7.2.
‡ Theoretical nominal bare wire diameter by resistance; see 1.6.7.3.
See Table 1-12 for resistance metric equivalents.

Copyright National Electrical Manufacturers Association
Provided by IHS under license with NEMA
No reproduction or networking permitted without license from IHS
Not for Resale

Table 1-6
INCH AND METRIC EQUIVALENT DIMENSIONS FOR MAGNET WIRE
TYPE 3 SELF-BONDING WIRE, 16 TO 30 AWG

AWG Size	Bare Wire Diameter						Minimum Increase in Diameter				Maximum Overall Diameter		AWG Size
	Minimum		Nominal		Maximum		Film Coating		Self-Bonding Overcoat				
	inches	mm	inches	mm	inches	mm	inches	mm	inches	mm	inches	mm	
16	0.0503	1.278	0.0508	1.290	0.0511*	1.298*	0.0043	0.109	0.0006	0.015	0.0577	1.466	16
17	0.0448	1.138	0.0453	1.151	0.0455*	1.156*	0.0041	0.104	0.0006	0.015	0.0520	1.321	17
18	0.0399	1.013	0.0403	1.024	0.0405*	1.029*	0.0039	0.099	0.0006	0.015	0.0468	1.189	18
19	0.0355	0.902	0.0359	0.912	0.0361*	0.917*	0.0037	0.094	0.0006	0.015	0.0422	1.072	19
20	0.0317	0.805	0.0320	0.813	0.0322*	0.818*	0.0035	0.089	0.0005	0.013	0.0379	0.903	20
21	0.0282	0.716	0.0285	0.724	0.0286*	0.726*	0.0033	0.084	0.0005	0.013	0.0342	0.869	21
22	0.0250	0.635	0.0253	0.643	0.0254*	0.645*	0.0032	0.081	0.0005	0.013	0.0308	0.782	22
23	0.0224	0.569	0.0226	0.574	0.0227*	0.577*	0.0030	0.076	0.0005	0.013	0.0279	0.709	23
24	0.0119	0.505	0.0201	0.511	0.0202*	0.513*	0.0029	0.074	0.0005	0.013	0.0252	0.640	24
25	0.0177	0.450	0.0179	0.455	0.0180*	0.457*	0.0027	0.069	0.0005	0.013	0.0228	0.579	25
26	0.0157	0.399	0.0159	0.404	0.0160*	0.406*	0.0026	0.066	0.0005	0.013	0.0206	0.523	26
27	0.0141	0.358	0.0142	0.361	0.0143	0.363	0.0024	0.061	0.0005	0.013	0.0185	0.470	27
28	0.0125	0.318	0.0126	0.320	0.0127	0.323	0.0023	0.058	0.0005	0.013	0.0166	0.422	28
29	0.0112	0.284	0.0113	0.287	0.0114	0.290	0.0022	0.056	0.0004	0.010	0.0152	0.386	29
30	0.0099	0.251	0.0100	0.254	0.0101	0.257	0.0021	0.053	0.0004	0.010	0.0137	0.348	30

* This bare wire diameter shall be permitted to be exceeded; see 1.6.7.2

Copyright National Electrical Manufacturers Association
Provided by IHS under license with NEMA
No reproduction or networking permitted without license from IHS

Not for Resale

Copyright National Electrical Manufacturers Association
Provided by IHS under license with NEMA
No reproduction or networking permitted without license from IHS
Not for Resale

Table 1-7
INCH AND METRIC EQUIVALENT DIMENSIONS FOR MAGNET WIRE
SINGLE GLASS FIBER COVERED ROUND BARE, SINGLE FILM COATED AND HEAVY FILM INSULATED WIRE

AWG Size	Bare Wire Diameter						Minimum Increase Single glass fiber covering		Maximum Overall Diameter, Single glass fiber covered						AWG Size
	Minimum		Nominal		Maximum				Bare		Single Film		Heavy Film		
	inches	mm	inches	mm	inches	mm	inches	mm	inches	mm	inches	mm	inches	mm	
4/0	0.4554	11.567	0.4600	11.684	0.4646	11.801	0.0045	0.114	0.4716	11.979	...	...		...	4/0
3/0	0.4055	10.300	0.4096	10.404	0.4137	10.508	0.0045	0.114	0.4207	10.686	...	...	...	...	3/0
2/0	0.3612	9.174	0.3648	9.266	0.3684	9.357	0.0045	0.114	0.3754	9.535	...	...	...	...	2/0
1/0	0.3170	8.171	0.3249	8.252	0.3281	8.334	0.0045	0.114	0.3351	8.512	...	...	...	...	1/0
1	0.2864	7.275	0.2893	7.348	0.2922	7.422	0.0045	0.114	0.2992	7.600	...	...	...	...	1
2	0.2550	6.477	0.2576	6.543	0.2602	6.609	0.0045	0.114	0.2672	6.787	...	...	...	...	2
3	0.2271	5.768	0.2294	5.827	0.2317	5.885	0.0045	0.114	0.2387	6.063	...	...	...	...	3
4	0.2023	5.138	0.2043	5.189	0.2053*	5.215*	0.0045	0.114	0.2133	5.418	...	...	0.2168	5.507	4
5	0.1801	4.575	0.1819	4.620	0.1828*	4.643*	0.0045	0.114	0.1907	4.844	...	...	0.1942	4.933	5
6	0.1604	4.074	0.1620	4.115	0.1628*	4.135*	0.0045	0.114	0.1706	4.333	...	...	0.1741	4.422	6
7	0.1429	3.630	0.1443	3.665	0.1450*	3.683*	0.0045	0.114	0.1527	3.879	...	...	0.1561	3.965	7
8	0.1272	3.231	0.1285	3.264	0.1292*	3.282*	0.0045	0.114	0.1368	3.475	...	...	0.1402	3.561	8
9	0.1133	2.878	0.1144	2.906	0.1150*	2.921*	0.0045	0.114	0.1225	3.112	...	...	0.1259	3.198	9
10	0.1009	2.563	0.1019	2.588	0.1024*	2.601*	0.0040	0.102	0.1089	2.766	...	...	0.1121	2.847	10
11	0.0898	2.281	0.0907	2.304	0.0912*	2.136*	0.0040	0.102	0.0976	2.479	...	...	0.1008	2.560	11
12	0.0800	2.032	0.0808	2.052	0.0812*	2.062*	0.0040	0.102	0.0876	2.225	...	...	0.0907	2.304	12
13	0.0713	1.811	0.0720	1.829	0.0724*	1.839*	0.0040	0.102	0.0787	1.999	...	...	0.0817	2.075	13
14	0.0635	1.613	0.0641	1.628	0.0644*	1.636*	0.0040	0.102	0.0707	1.796	0.0726	1.844	0.0742	1.885	14
15	0.0565	1.435	0.0571	1.450	0.0574*	1.458*	0.0040	0.102	0.0637	1.618	0.0654	1.661	0.0669	1.699	15
16	0.0503	1.278	0.0508	1.290	0.0511*	1.298*	0.0040	0.102	0.0573	1.455	0.0591	1.501	0.0605	1.537	16
17	0.0448	1.138	0.0453	1.151	0.0455*	1.156*	0.0040	0.102	0.0518	1.316	0.0535	1.359	0.0548	1.392	17
18	0.0399	1.013	0.0403	1.024	0.0405*	1.029*	0.0040	0.102	0.0467	1.186	0.0484	1.229	0.0497	1.262	18
19	0.0355	0.902	0.0359	0.912	0.0361*	0.917*	0.0040	0.102	0.0423	1.074	0.0439	1.115	0.0451	1.146	19
20	0.0317	0.805	0.0320	0.813	0.0322*	0.818*	0.0040	0.102	0.0383	0.973	0.0399	1.013	0.0411	1.044	20
21	0.0282	0.716	0.0285	0.724	0.0286*	0.726*	0.0040	0.102	0.0348	0.884	0.0363	0.922	0.0374	0.950	21
22	0.0250	0.635	0.0253	0.643	0.0254*	0.645*	0.0040	0.102	0.0316	0.803	0.0330	0.838	0.0341	0.866	22
23	0.0224	0.569	0.0226	0.574	0.0227*	0.577*	0.0040	0.102	0.0288	0.732	0.0303	0.770	0.0313	0.795	23
24	0.0199	0.505	0.0201	0.511	0.0202*	0.513*	0.0025	0.064	0.0243	0.617	0.0257	0.653	0.0267	0.678	24
25	0.0177	0.450	0.0179	0.455	0.0180*	0.457*	0.0025	0.064	0.0221	0.561	0.0234	0.594	0.0243	0.617	25
26	0.0157	0.399	0.0159	0.404	0.0160*	0.406*	0.0025	0.064	0.0201	0.511	0.0213	0.541	0.0222	0.564	26
27	0.0141	0.358	0.0142	0.361	0.0143	0.363	0.0025	0.064	0.0183	0.465	0.0196	0.498	0.0204	0.518	27
28	0.0125	0.318	0.0126	0.320	0.0127	0.323	0.0025	0.064	0.0137	0.424	0.0180	0.457	0.0187	0.475	28
29	0.0112	0.284	0.0113	0.287	0.0114	0.290	0.0025	0.064	0.0124	0.391	0.0166	0.422	0.0173	0.439	29
30	0.0099	0.251	0.0100	0.254	0.0101	0.257	0.0025	0.064	0.0141	0.358	0.0152	0.386	0.0159	0.404	30

* This bare wire diameter shall be permitted to be exceeded; see 1.6.7.2

Copyright National Electrical Manufacturers Association
Provided by IHS under license with NEMA
No reproduction or networking permitted without license from IHS
Not for Resale

Table 1-8
INCH AND METRIC EQUIVALENT DIMENSIONS FOR MAGNET WIRE
DOUBLE GLASS FIBER COVERED ROUND BARE, SINGLE FILM COATED AND HEAVY FILM COATED WIRE

AWG	Bare Wire Diameter						Minimum Increase Double glass fiber covering		Maximum Overall Diameter, Double glass fiber covered						AWG
	Minimum		Nominal		Maximum				Bare		Single Film		Heavy Film		
Size	inches	mm	inches	mm	inches	mm	inches	mm	inches	mm	inches	mm	inches	mm	Size
4/0	0.4554	11.567	0.4600	11.684	0.4646	11.801	0.0070	0.178	0.4756	12.080	...	...	...	...	4/0
3/0	0.4055	10.300	0.4096	10.404	0.4137	10.508	0.0070	0.178	0.4247	10.787	...	...	...	...	3/0
2/0	0.3612	9.174	0.3648	9.266	0.3684	9.357	0.0070	0.178	0.3794	9.637	...	...	...	...	2/0
1/0	0.3170	8.171	0.3249	8.252	0.3281	8.334	0.0070	0.178	0.3391	8.613	...	...	...	...	1/0
1	0.2864	7.275	0.2893	7.348	0.2922	7.422	0.0070	0.178	0.3032	7.701	...	...	...	...	1
2	0.2550	6.477	0.2576	6.543	0.2602	6.609	0.0070	0.178	0.2712	6.888	...	...	...	...	2
3	0.2271	5.768	0.2294	5.827	0.2317	5.885	0.0070	0.178	0.2427	6.165	...	...	...	...	3
4	0.2023	5.138	0.2043	5.189	0.2053*	5.215*	0.0070	0.178	0.2173	5.520	...	...	0.2210	5.613	4
5	0.1801	4.575	0.1819	4.620	0.1828*	4.643*	0.0070	0.178	0.1947	4.945	...	...	0.1982	5.034	5
6	0.1604	4.074	0.1620	4.115	0.1628*	4.135*	0.0070	0.178	0.1746	4.435	...	...	0.1781	4.524	6
7	0.1429	3.630	0.1443	3.665	0.1450*	3.683*	0.0070	0.178	0.1567	3.980	...	...	0.1601	4.067	7
8	0.1272	3.231	0.1285	3.264	0.1292*	3.282*	0.0070	0.178	0.1408	3.576	...	...	0.1442	3.663	8
9	0.1133	2.878	0.1144	2.906	0.1150*	2.921*	0.0070	0.178	0.1265	3.213	...	...	0.1299	3.299	9
10	0.1009	2.563	0.1019	2.588	0.1024*	2.601*	0.0060	0.152	0.1119	2.842	...	...	0.1151	2.924	10
11	0.0898	2.281	0.0907	2.304	0.0912*	2.136*	0.0060	0.152	0.1006	2.555	...	...	0.1038	2.637	11
12	0.0800	2.032	0.0808	2.052	0.0812*	2.062*	0.0060	0.152	0.0906	2.301	...	...	0.0937	2.380	12
13	0.0713	1.811	0.0720	1.829	0.0724*	1.839*	0.0060	0.152	0.0817	2.075	...	...	0.0847	2.151	13
14	0.0635	1.613	0.0641	1.628	0.0644*	1.636*	0.0060	0.152	0.0737	1.872	0.0726	1.844	0.0772	1.961	14
15	0.0565	1.435	0.0571	1.450	0.0574*	1.458*	0.0060	0.152	0.0667	1.694	0.0654	1.661	0.0699	1.775	15
16	0.0503	1.278	0.0508	1.290	0.0511*	1.298*	0.0060	0.152	0.0603	1.532	0.0621	1.577	0.0635	1.613	16
17	0.0448	1.138	0.0453	1.151	0.0455*	1.156*	0.0060	0.152	0.0548	1.392	0.0565	1.465	0.0578	1.468	17
18	0.0399	1.013	0.0403	1.024	0.0405*	1.029*	0.0060	0.152	0.0497	1.262	0.0514	1.306	0.0527	1.339	18
19	0.0355	0.902	0.0359	0.912	0.0361*	0.917*	0.0060	0.152	0.0435	1.151	0.0469	1.191	0.0481	1.222	19
20	0.0317	0.805	0.0320	0.813	0.0322*	0.818*	0.0060	0.152	0.0413	1.049	0.0429	1.090	0.0441	1.120	20
21	0.0282	0.716	0.0285	0.724	0.0286*	0.726*	0.0060	0.152	0.0378	0.960	0.0393	0.998	0.0404	1.026	21
22	0.0250	0.635	0.0253	0.643	0.0254*	0.645*	0.0060	0.152	0.0346	0.879	0.0360	0.914	0.0371	0.942	22
23	0.0224	0.569	0.0226	0.574	0.0227*	0.577*	0.0060	0.152	0.0318	0.808	0.0333	0.846	0.0343	0.871	23
24	0.0199	0.505	0.0201	0.511	0.0202*	0.513*	0.0045	0.114	0.0263	0.668	0.0277	0.704	0.0287	0.729	24
25	0.0177	0.450	0.0179	0.455	0.0180*	0.457*	0.0045	0.114	0.0241	0.612	0.0254	0.645	0.0263	0.668	25
26	0.0157	0.399	0.0159	0.404	0.0160*	0.406*	0.0045	0.114	0.0221	0.561	0.0233	0.592	0.0242	0.615	26
27	0.0141	0.358	0.0142	0.361	0.0143	0.363	0.0045	0.114	0.0203	0.516	0.0216	0.549	0.0224	0.569	27
28	0.0125	0.318	0.0126	0.320	0.0127	0.323	0.0045	0.114	0.0187	0.475	0.0200	0.508	0.0207	0.526	28
29	0.0112	0.284	0.0113	0.287	0.0114	0.290	0.0045	0.114	0.0174	0.442	0.0186	0.472	0.0193	0.490	29
30	0.0099	0.251	0.0100	0.254	0.0101	0.257	0.0045	0.114	0.0161	0.409	0.0172	0.437	0.0179	0.455	30

* This bare wire diameter shall be permitted to be exceeded; see 1.6.7.2

Copyright National Electrical Manufacturers Association
Provided by IHS under license with NEMA
No reproduction or networking permitted without license from IHS
Not for Resale

Table 1-9
INCH AND METRIC EQUIVALENT DIMENSIONS FOR MAGNET WIRE
SINGLE POLYESTER GLASS FIBER COVERED ROUND BARE, SINGLE FILM COATED AND HEAVY FILM COATED WIRE

AWG Size	Bare Wire Diameter						Minimum Increase Single polyester-glass fiber covering		Maximum Overall Diameter, Single polyester glass fiber covered						AWG Size
	Minimum		Nominal		Maximum				Bare		Single Film		Heavy Film		
	inches	mm	inches	mm	inches	mm	inches	mm	inches	mm	inches	mm	inches	mm	
4/0	0.4554	11.567	0.4600	11.684	0.4646	11.801	0.0040	0.102	0.4696	11.928	...	...	...	...	4/0
3/0	0.4055	10.300	0.4096	10.404	0.4137	10.508	0.0040	0.102	0.4187	10.635	...	...	...	...	3/0
2/0	0.3612	9.174	0.3648	9.266	0.3684	9.357	0.0040	0.102	0.3734	9.484	...	...	...	...	2/0
1/0	0.3170	8.171	0.3249	8.252	0.3281	8.334	0.0040	0.102	0.3331	8.461	...	...	...	...	1/0
1	0.2864	7.275	0.2893	7.348	0.2922	7.422	0.0040	0.102	0.2972	7.549	...	...	...	...	1
2	0.2550	6.477	0.2576	6.543	0.2602	6.609	0.0040	0.102	0.2652	6.736	...	...	...	...	2
3	0.2271	5.768	0.2294	5.827	0.2317	5.885	0.0040	0.102	0.2367	6.012	...	...	...	...	3
4	0.2023	5.138	0.2043	5.189	0.2053*	5.215*	0.0040	0.102	0.2123	5.392	...	...	0.2158	5.481	4
5	0.1801	4.575	0.1819	4.620	0.1828*	4.643*	0.0040	0.102	0.1897	4.818	...	...	0.1932	4.907	5
6	0.1604	4.074	0.1620	4.115	0.1628*	4.135*	0.0040	0.102	0.1696	4.308	...	...	0.1731	4.397	6
7	0.1429	3.630	0.1443	3.665	0.1450*	3.683*	0.0040	0.102	0.1517	3.853	...	...	0.1551	3.940	7
8	0.1272	3.231	0.1285	3.264	0.1292*	3.282*	0.0040	0.102	0.1358	3.449	...	...	0.1392	3.536	8
9	0.1133	2.878	0.1144	2.906	0.1150*	2.921*	0.0040	0.102	0.1215	3.086	...	...	0.1249	3.172	9
10	0.1009	2.563	0.1019	2.588	0.1024*	2.601*	0.0035	0.089	0.1079	2.741	...	...	0.1111	2.822	10
11	0.0898	2.281	0.0907	2.304	0.0912*	2.136*	0.0035	0.089	0.0966	2.454	...	...	0.0998	2.535	11
12	0.0800	2.032	0.0808	2.052	0.0812*	2.062*	0.0035	0.089	0.0866	2.200	...	...	0.0897	2.278	12
13	0.0713	1.811	0.0720	1.829	0.0724*	1.839*	0.0035	0.089	0.0777	1.974	...	...	0.0807	2.050	13
14	0.0635	1.613	0.0641	1.628	0.0644*	1.636*	0.0035	0.089	0.0697	1.770	0.0716	1.819	0.0732	1.859	14
15	0.0565	1.435	0.0571	1.450	0.0574*	1.458*	0.0035	0.089	0.0627	1.593	0.0644	1.639	0.0569	1.674	15
16	0.0503	1.278	0.0508	1.290	0.0511*	1.298*	0.0035	0.089	0.0563	1.430	0.0581	1.476	0.0595	1.511	16
17	0.0448	1.138	0.0453	1.151	0.0455*	1.156*	0.0035	0.089	0.0508	1.290	0.0525	1.334	0.0538	1.367	17
18	0.0399	1.013	0.0403	1.024	0.0405*	1.029*	0.0035	0.089	0.0457	1.161	0.0474	1.204	0.0487	1.237	18
19	0.0355	0.902	0.0359	0.912	0.0361*	0.917*	0.0035	0.089	0.0413	1.049	0.0429	1.090	0.0441	1.120	19
20	0.0317	0.805	0.0320	0.813	0.0322*	0.818*	0.0035	0.089	0.0373	0.947	0.0389	0.988	0.0401	1.019	20
21	0.0282	0.716	0.0285	0.724	0.0286*	0.726*	0.0035	0.089	0.0338	0.859	0.0353	0.897	0.0364	0.925	21
22	0.0250	0.635	0.0253	0.643	0.0254*	0.645*	0.0035	0.089	0.0306	0.777	0.0320	0.813	0.0331	0.841	22
23	0.0224	0.569	0.0226	0.574	0.0227*	0.577*	0.0035	0.089	0.0278	0.706	0.0293	0.744	0.0303	0.770	23
24	0.0199	0.505	0.0201	0.511	0.0202*	0.513*	0.0025	0.064	0.0253	0.643	0.0267	0.678	0.0277	0.704	24
25	0.0177	0.450	0.0179	0.455	0.0180*	0.457*	0.0025	0.064	0.0231	0.587	0.0244	0.620	0.0253	0.643	25
26	0.0157	0.399	0.0159	0.404	0.0160*	0.406*	0.0025	0.064	0.0211	0.536	0.0223	0.566	0.0232	0.589	26
27	0.0141	0.358	0.0142	0.361	0.0143	0.363	0.0025	0.064	0.0193	0.490	0.0206	0.523	0.0214	0.544	27
28	0.0125	0.318	0.0126	0.320	0.0127	0.323	0.0025	0.064	0.0177	0.450	0.0190	0.483	0.0197	0.500	28
29	0.0112	0.284	0.0113	0.287	0.0114	0.290	0.0025	0.064	0.0164	0.417	0.0176	0.447	0.0183	0.465	29
30	0.0099	0.251	0.0100	0.254	0.0101	0.257	0.0025	0.064	0.0151	0.384	0.0162	0.411	0.0169	0.429	30

*This bare wire diameter shall be permitted to be exceeded; see 1.6.7.2

Copyright National Electrical Manufacturers Association
Provided by IHS under license with NEMA
No reproduction or networking permitted without license from IHS
Not for Resale

Table 1-10
INCH AND METRIC EQUIVALENT DIMENSIONS FOR MAGNET WIRE
DOUBLE POLYESTER GLASS FIBER COVERED ROUND BARE, SINGLE FILM COATED AND HEAVY FILM COATED WIRE

AWG	Bare Wire Diameter						Minimum Increase Double polyester-glass fiber covering		Maximum Overall Diameter, Double polyester glass fiber covered						AWG
	Minimum		Nominal		Maximum				Bare		Single Film		Heavy Film		
Size	inches	mm	inches	mm	inches	mm	inches	mm	inches	mm	inches	mm	inches	mm	Size
4/0	0.4554	11.567	0.4600	11.684	0.4646	11.801	0.0060	0.152	0.4736	12.029	...	...	...	...	4/0
3/0	0.4055	10.300	0.4096	10.404	0.4137	10.508	0.0060	0.152	0.4227	10.737	...	...	...	...	3/0
2/0	0.3612	9.174	0.3648	9.266	0.3684	9.357	0.0060	0.152	0.3774	9.586	...	...	...	...	2/0
1/0	0.3170	8.171	0.3249	8.252	0.3281	8.334	0.0060	0.152	0.3371	8.562	...	...	...	...	1/0
1	0.2864	7.275	0.2893	7.348	0.2922	7.422	0.0060	0.152	0.3012	7.650	...	...	...	...	1
2	0.2550	6.477	0.2576	6.543	0.2602	6.609	0.0060	0.152	0.2692	6.838	...	...	...	...	2
3	0.2271	5.768	0.2294	5.827	0.2317	5.885	0.0060	0.152	0.2407	6.114	...	...	...	...	3
4	0.2023	5.138	0.2043	5.189	0.2053*	5.215*	0.0060	0.152	0.2153	5.469	...	...	0.2188	5.558	4
5	0.1801	4.575	0.1819	4.620	0.1828*	4.643*	0.0060	0.152	0.1927	4.895	...	...	0.1962	4.983	5
6	0.1604	4.074	0.1620	4.115	0.1628*	4.135*	0.0060	0.152	0.1726	4.384	...	...	0.1761	4.473	6
7	0.1429	3.630	0.1443	3.665	0.1450*	3.683*	0.0060	0.152	0.1547	3.929	...	...	0.1581	4.016	7
8	0.1272	3.231	0.1285	3.264	0.1292*	3.282*	0.0060	0.152	0.1388	3.526	...	...	0.1422	3.612	8
9	0.1133	2.878	0.1144	2.906	0.1150*	2.921*	0.0060	0.152	0.1245	3.162	...	...	0.1279	3.249	9
10	0.1009	2.563	0.1019	2.588	0.1024*	2.601*	0.0055	0.140	0.1109	2.817	...	...	0.1141	2.898	10
11	0.0898	2.281	0.0907	2.304	0.0912*	2.136*	0.0055	0.140	0.0996	2.530	...	...	0.1028	2.611	11
12	0.0800	2.032	0.0808	2.052	0.0812*	2.062*	0.0055	0.140	0.0986	2.276	...	...	0.0927	2.355	12
13	0.0713	1.811	0.0720	1.829	0.0724*	1.839*	0.0055	0.140	0.0807	2.050	...	...	0.0837	2.126	13
14	0.0635	1.613	0.0641	1.628	0.0644*	1.636*	0.0055	0.140	0.0727	1.847	0.0746	1.895	0.0762	1.935	14
15	0.0565	1.435	0.0571	1.450	0.0574*	1.458*	0.0055	0.140	0.0657	1.669	0.0674	1.712	0.0689	1.750	15
16	0.0503	1.278	0.0508	1.290	0.0511*	1.298*	0.0055	0.140	0.0593	1.506	0.0611	1.552	0.0625	1.558	16
17	0.0448	1.138	0.0453	1.151	0.0455*	1.156*	0.0055	0.140	0.0538	1.367	0.0555	1.410	0.0568	1.443	17
18	0.0399	1.013	0.0403	1.024	0.0405*	1.029*	0.0055	0.140	0.0487	1.237	0.0504	1.280	0.0517	1.313	18
19	0.0355	0.902	0.0359	0.912	0.0361*	0.917*	0.0055	0.140	0.0443	1.125	0.0459	1.166	0.0471	1.196	19
20	0.0317	0.805	0.0320	0.813	0.0322*	0.818*	0.0055	0.140	0.0403	1.024	0.0419	1.064	0.0431	1.095	20
21	0.0282	0.716	0.0285	0.724	0.0286*	0.726*	0.0055	0.140	0.0368	0.935	0.0383	0.973	0.0394	1.001	21
22	0.0250	0.635	0.0253	0.643	0.0254*	0.645*	0.0055	0.140	0.0336	0.853	0.0350	0.889	0.0361	0.917	22
23	0.0224	0.569	0.0226	0.574	0.0227*	0.577*	0.0055	0.140	0.0308	0.782	0.0323	0.820	0.0333	0.846	23
24	0.0199	0.505	0.0201	0.511	0.0202*	0.513*	0.0045	0.114	0.0268	0.681	0.0282	0.716	0.0292	0.742	24
25	0.0177	0.450	0.0179	0.455	0.0180*	0.457*	0.0045	0.114	0.0246	0.625	0.0259	0.658	0.0268	0.681	25
26	0.0157	0.399	0.0159	0.404	0.0160*	0.406*	0.0045	0.114	0.0226	0.574	0.0238	0.605	0.0247	0.627	26
27	0.0141	0.358	0.0142	0.361	0.0143	0.363	0.0045	0.114	0.0208	0.528	0.0221	0.561	0.0229	0.582	27
28	0.0125	0.318	0.0126	0.320	0.0127	0.323	0.0045	0.114	0.0192	0.488	0.0205	0.521	0.0212	0.538	28
29	0.0112	0.284	0.0113	0.287	0.0114	0.290	0.0045	0.114	0.0179	0.455	0.0191	0.485	0.0198	0.503	29
30	0.0099	0.251	0.0100	0.254	0.0101	0.257	0.0045	0.114	0.0166	0.422	0.0177	0.450	0.0184	0.467	30

*This bare wire diameter shall be permitted to be exceeded; see 1.6.7.2

Table 1-11
MAXIMUM DIAMETERS FOR ROUND BARE WIRE 4 TO 26 AWG

AWG Size	Practical Maximum Diameter Given in Part 2		Full Maximum Diameter	
	inches	mm	inches	mm
4	0.2053	5.215	0.2063	5.240
5	0.1828	4.643	0.1837	4.666
6	0.1628	4.135	0.1636	4.155
7	0.1450	3.683	0.1457	3.701
8	0.1292	3.282	0.1298	3.297
9	0.1150	2.921	0.1155	2.934
10	0.1024	2.601	0.1029	2.614
11	0.0912	2.316	0.0916	2.327
12	0.0812	2.062	0.0816	2.073
13	0.0724	1.839	0.0727	1.847
14	0.0644	1.636	0.0647	1.643
15	0.0574	1.485	0.0577	1.466
16	0.0511	1.298	0.0513	1.303
17	0.0455	1.156	0.0458	1.163
18	0.0405	1.029	0.0407	1.034
19	0.0361	0.917	0.0363	0.922
20	0.0322	0.818	0.0323	0.820
21	0.0286	0.726	0.0288	0.731
22	0.0254	0.645	0.0256	0.650
23	0.0227	0.577	0.0228	0.579
24	0.0202	0.513	0.0203	0.516
25	0.0180	0.457	0.0181	0.460
26	0.0160	0.406	0.0161	0.409

NOTE—The sections in Part 2 which apply to round wire give the practical maximum bare wire diameters for sizes 4 through 26 AWG, based on using only half of the bare wire diameter plus tolerance. The tolerances used in the full maximum diameters given above are in accordance with ASTM B3. See 1.6.7.2 for the conditions which should be met for use in the full tolerance.

Table 1-12
ROUND BARE WIRE, FINE SIZES BY RESISTANCE

AWG Size	Ohms at 20°C at 100% IACS						AWG Size
	Minimum		Nominal		Maximum		
	Per Foot	Per Meter	Per Foot	Per Meter	Per Foot	Per Meter	
45	3.080	10.11	3.348	10.98	3.616	11.86	45
46	3.870	12.70	4.207	13.80	4.544	14.91	46
47	4.868	15.97	5.291	17.36	5.714	18.75	47
48	6.205	20.36	6.745	22.13	7.285	23.90	48
49	7.744	25.41	8.417	27.62	9.090	29.82	49
50	9.734	31.94	10.58	34.71	11.43	37.50	50
51	12.32	40.42	13.39	43.93	14.46	47.44	51
52	15.69	51.48	17.05	55.94	18.41	60.40	52
53	19.48	63.91	21.17	69.46	22.86	75.00	53
54	24.82	81.43	26.98	88.52	29.14	95.60	54
55	31.54	103.5	34.28	112.5	37.02	121.5	55
56	39.73	130.3	43.19	141.7	46.64	153.0	56

Copyright National Electrical Manufacturers Association
Provided by IHS under license with NEMA
No reproduction or networking permitted without license from IHS
Not for Resale

Table 1-13
DIMENSIONS AND RADII FOR RECTANGULAR BARE WIRE

| Nominal Thickness | | Nominal Width | | |

STD·NEMA MW 1000-ENGL 1996 ■ 6470247 0510230 328 ■

Table 1-15
COMPARISON BETWEEN AWG AND IEC R-40 SERIES BARE WIRE DIAMETERS

AWG Size	Bare Wire Diameter Minimum inches	Minimum mm*	Nominal inches	Nominal mm*	Maximum inches	Maximum mm*	Nominal Dia. R-40 Series mm	Nominal ** AWG Area mm^2	Nominal R-40 Series Area mm^2	% Difference † Nominal Diameter R-40 to AWG	% Difference † Nominal Area R-40 to AWG	AWG Size
4	0.2023	5.138	0.2043	5.189	0.2053	5.215	5.000	21.149	19.635	-3.6	-7.2	4
4.5	0.1909	4.849	0.1928	4.897	0.1938	4.923	4.750	18.835	17.721	-3.0	-5.9	4.5
5	0.1801	4.575	0.1819	4.620	0.1828	4.643	4.500	16.766	15.904	-2.6	-5.1	5
5.5	0.1700	4.318	0.1717	4.361	0.1726	4.384	4.250	14.938	14.186	-2.5	-5.0	5.5
6	0.1604	4.074	0.1620	4.115	0.1628	4.135	4.000	13.298	12.566	-2.8	-5.5	6
6.5	0.1514	3.846	0.1529	3.884	0.1537	3.904	3.750	11.846	11.045	-3.4	-6.8	6.5
7	0.1429	3.630	0.1443	3.665	0.1450	3.683	3.550	10.551	9.898	-3.1	-6.2	7
7.5	0.1348	3.424	0.1362	3.459	0.1369	3.477	3.350	9.400	8.814	-3.2	-6.2	7.5
8	0.1272	3.231	0.1285	3.264	0.1291	3.279	3.150	8.367	7.793	-3.5	-6.9	8
8.5	0.1201	3.051	0.1213	3.081	0.1219	3.096	3.000	7.456	7.069	-2.6	-5.2	8.5
9	0.1133	2.878	0.1144	2.906	0.1150	2.921	2.800	6.631	6.158	-3.6	-7.1	9
9.5	0.1069	2.715	0.1080	2.743	0.1085	2.756	2.650	5.910	5.515	-3.4	-6.7	9.5
10	0.1009	2.563	0.1019	2.588	0.1024	2.601	2.500	5.261	4.909	-3.4	-6.7	10
10.5	0.0952	2.418	0.0962	2.443	0.0967	2.456	2.360	4.689	4.374	-3.4	-6.7	10.5
11	0.0898	2.281	0.0907	2.304	0.0912	2.316	2.240	4.168	3.941	-2.8	-5.5	11
11.5	0.0847	2.151	0.0856	2.174	0.0860	2.184	2.120	3.713	3.530	-2.5	-4.9	11.5
12	0.0800	2.032	0.0808	2.052	0.0812	2.062	2.000	3.308	3.142	-2.5	-5.0	12
12.5	0.0755	1.918	0.0763	1.938	0.0767	1.948	1.900	2.950	2.835	-2.0	-3.9	12.5
13	0.0713	1.811	0.0720	1.829	0.0724	1.839	1.800	2.627	2.545	-1.6	-3.1	13
13.5	0.0672	1.707	0.0679	1.725	0.0682	1.732	1.700	2.336	2.270	-1.4	-2.8	13.5
14	0.0635	1.613	0.0641	1.628	0.0644	1.636	1.600	2.082	2.011	-1.7	-3.4	14
14.5	0.0599	1.521	0.0605	1.537	0.0608	1.544	1.500	1.855	1.767	-2.4	-3.4	14.5
15	0.0565	1.435	0.0571	1.450	0.0574	1.458	1.400	1.652	1.539	-3.5	-4.7	15
15.5	0.0534	1.356	0.0539	1.369	0.0542	1.377	1.320	1.472	1.368	-3.6	-6.8	15.5
16	0.0503	1.278	0.0508	1.290	0.0511	1.298	1.250	1.308	1.227	-3.1	-7.0	16
16.5	0.0475	1.207	0.0480	1.219	0.0482	1.224	1.180	1.167	1.094	-3.2	-6.2	16.5

* These diameters are rounded numbers calculated from the inch values.

** The nominal area of AWG wires have been calculated in square inch units and then converted to square millimeters.

† The differences in diameter and area have been calculated from values more precise than those shown in the table.

Copyright National Electrical Manufacturers Association
Provided by IHS under license with NEMA
No reproduction or networking permitted without license from IHS
Not for Resale

Copyright National Electrical Manufacturers Association
Provided by IHS under license with NEMA
No reproduction or networking permitted without license from IHS
Not for Resale

Table 1-15 (Continued)

AWG Size	Bare Wire Diameter Minimum inches	Minimum mm*	Nominal inches	Nominal mm*	Maximum inches	Maximum mm*	Nominal Dia. R-40 Series mm	Nominal ** AWG Area mm^2	Nominal R-40 Series Area mm^2	% Difference † Nominal Diameter R-40 to AWG	% Difference † Nominal Area R-40 to AWG	AWG Size
17	0.0448	1.138	0.0453	1.151	0.0455	1.156	1.120	1.040	0.985	-2.7	-6.3	17
17.5	0.0423	1.074	0.0427	1.085	0.0429	1.090	1.060	0.924	0.882	-2.3	-5.3	17.5
18	0.0399	1.013	0.0403	1.024	0.0405	1.029	1.000	0.823	0.785	-2.3	-4.5	18
18.5	0.0376	0.955	0.0380	0.965	0.0382	0.970	0.950	0.732	0.709	-1.6	-4.6	18.5
19	0.0355	0.902	0.0359	0.912	0.0361	0.917	0.900	0.653	0.636	-1.3	-3.1	19
19.5	0.0336	0.853	0.0339	0.861	0.0341	0.866	0.850	0.582	0.567	-1.3	-2.6	19.5
20	0.0317	0.805	0.0320	0.813	0.0322	0.818	0.800	0.519	0.503	-1.6	-3.1	20
20.5	0.0299	0.759	0.0302	0.767	0.0304	0.772	0.750	0.462	0.442	-2.2	-4.4	20.5
21	0.0282	0.716	0.0285	0.724	0.0286	0.726	0.710	0.412	0.396	-1.9	-3.8	21
21.5	0.0266	0.676	0.0269	0.683	0.0270	0.686	0.670	0.367	0.353	-1.9	-3.8	21.5
22	0.0250	0.635	0.0253	0.643	0.0254	0.645	0.630	0.324	0.312	-2.0	-3.9	22
22.5	0.0237	0.602	0.0239	0.607	0.0240	0.610	0.600	0.289	0.283	-1.2	-2.3	22.5
23	0.0224	0.569	0.0226	0.574	0.0227	0.577	0.560	0.259	0.246	-2.4	-4.8	23
23.5	0.0211	0.536	0.0213	0.541	0.0214	0.544	0.530	0.230	0.221	-2.0	-4.0	23.5
24	0.0199	0.505	0.0201	0.511	0.0202	0.513	0.500	0.205	0.196	-2.1	-4.1	24
24.5	0.0188	0.478	0.0190	0.483	0.0191	0.485	0.475	0.183	0.177	-1.6	-3.1	24.5
25	0.0177	0.450	0.0179	0.455	0.0180	0.457	0.450	0.162	0.159	-1.0	-2.0	25
25.5	0.0167	0.424	0.0169	0.429	0.0170	0.432	0.425	0.145	0.142	-1.0	-2.0	25.5
26	0.0157	0.399	0.0159	0.404	0.0160	0.406	0.400	0.128	0.126	-1.0	-1.9	26
26.5	0.0149	0.378	0.0150	0.381	0.0151	0.384	0.375	0.114	0.110	-1.6	-3.1	26.5
27	0.0141	0.358	0.0142	0.361	0.0143	0.363	0.355	0.102	0.0990	-1.6	-3.1	27
27.5	0.0133	0.338	0.0134	0.340	0.0135	0.343	0.335	0.0910	0.0881	-1.6	-3.1	27.5
28	0.0125	0.318	0.0126	0.320	0.0127	0.323	0.315	0.0804	0.0779	-1.6	-3.1	28
28.5	0.0118	0.300	0.0119	0.302	0.0120	0.305	0.300	0.0718	0.0707	-0.7	-1.5	28.5
29	0.0112	0.284	0.0113	0.287	0.0114	0.290	0.280	0.0647	0.0616	-2.4	-4.8	29
29.5	0.0105	0.267	0.0106	0.269	0.0107	0.272	0.265	0.0569	0.0552	-1.6	-3.1	29.5
30	0.0099	0.251	0.0100	0.254	0.0101	0.257	0.250	0.0507	0.0491	-1.6	-3.1	30
30.5	0.0094	0.239	0.0095	0.241	0.0096	0.244	0.236	0.0457	0.0437	-2.2	-4.3	30.5
31	0.0088	0.224	0.0089	0.226	0.0090	0.229	0.224	0.0401	0.0394	-0.9	-1.8	31
31.5	0.0083	0.211	0.0084	0.213	0.0085	0.216	0.212	0.0358	0.0353	-0.6	-1.3	31.5
32	0.0079	0.201	0.0080	0.203	0.0081	0.206	0.200	0.0324	0.0314	-1.6	-3.1	32
32.5	0.0074	0.188	0.0075	0.191	0.0076	0.193	0.190	0.0285	0.0284	-0.3	-0.5	32.5

* These diameters are rounded numbers calculated from the inch values.

** The nominal area of AWG wires have been calculated in square inch units and then converted to square millimeters.

† The differences in diameter and area have been calculated from values more precise than those shown in the table.

STD.NEMA MW 1000-ENGL 1997 ■ 6470247 0510232 1T0 ■

Copyright National Electrical Manufacturers Association
Provided by IHS under license with NEMA
No reproduction or networking permitted without license from IHS
Not for Resale

Table 1-15 (continued)

AWG Size	Bare Wire Diameter Minimum inches	Minimum mm*	Nominal inches	Nominal mm*	Maximum inches	Maximum mm*	Nominal Dia. R-40 Series mm	Nominal ** AWG Area mm^2	Nominal R-40 Series Area mm^2	% difference † Nominal Diameter R-40 to AWG	% difference † Nominal Area R-40 to AWG	AWG Size
33	0.0070	0.178	0.0071	0.180	0.0072	0.183	0.180	0.0255	0.0254	-0.2	-0.4	33
33.5	0.0066	0.168	0.0067	0.170	0.0068	0.173	0.170	0.0227	0.0227	-0.1	-0.2	33.5
34	0.0062	0.157	0.0063	0.160	0.0064	0.163	0.160	0.0201	0.0201	0.0	0.0	34
34.5	0.0058	0.147	0.0059	0.150	0.0060	0.152	0.150	0.0176	0.0177	0.1	0.2	34.5
35	0.0055	0.140	0.0056	0.142	0.0057	0.145	0.140	0.0159	0.0154	-1.6	-3.1	35
35.5	0.0052	0.132	0.0053	0.135	0.0054	0.137	0.132	0.0142	0.0137	-1.9	-3.9	35.5
36	0.0049	0.124	0.0050	0.127	0.0051	0.130	0.125	0.0127	0.0123	-1.6	-3.1	36
36.5	0.0046	0.117	0.0047	0.119	0.0048	0.122	0.118	0.0112	0.0109	-1.2	-2.3	36.5
37	0.0044	0.112	0.0045	0.114	0.0046	0.117	0.112	0.0103	0.00985	-2.0	-4.0	37
37.5	0.0041	0.104	0.0042	0.107	0.0043	0.109	0.106	0.00894	0.00882	-0.6	-1.3	37.5
38	0.0039	0.099	0.0040	0.102	0.0041	0.104	0.100	0.00811	0.00785	-1.6	-3.1	38
38.5	0.0036	0.091	0.0037	0.094	0.0038	0.097	0.095	0.00694	0.00709	1.1	2.2	38.5
39	0.0034	0.086	0.0035	0.089	0.0036	0.091	0.090	0.00621	0.00636	1.2	2.5	39
39.5	0.0032	0.081	0.0033	0.084	0.0034	0.086	0.085	0.00552	0.00567	1.4	2.8	39.5
40	0.0030	0.076	0.0031	0.079	0.0032	0.081	0.080	0.00487	0.00503	1.6	3.2	40
40.5	0.0029	0.074	0.0030	0.076	0.0031	0.079	0.075	0.00456	0.00442	-1.6	-3.1	40.5
41	0.0027	0.069	0.0028	0.071	0.0029	0.074	0.071	0.00397	0.00396	-0.2	-0.3	41
41.5	0.0025	0.064	0.0026	0.066	0.0027	0.069	0.067	0.00343	0.00353	1.5	2.9	41.5
42	0.0024	0.061	0.0025	0.064	0.0026	0.066	0.063	0.00317	0.00312	-0.8	-1.6	42
42.5	0.0023	0.058	0.0024	0.061	0.0025	0.064	0.060	0.00292	0.00283	-1.6	-3.1	42.5
43	0.0021	0.053	0.0022	0.056	0.0023	0.058	0.056	0.00245	0.00243	0.2	0.4	43
43.5	0.0020	0.051	0.0021	0.053	0.0022	0.056	0.053	0.00223	0.00221	-0.6	-1.3	43.5
44	0.0019	0.048	0.0020	0.051	0.0021	0.053	0.050	0.00203	0.00196	-1.6	-3.1	44
44.5	0.0018	0.046	0.0019	0.048	0.0020	0.051	0.0475	0.00183	0.00177	-1.6	-3.1	44.5

* These diameters are rounded numbers calculated from the inch values.

** The nominal area of AWG wires have been calculated in square inch units and then converted to square millimeters.

† The differences in diameter and area have been calculated from values more precise than those shown in the table.

Copyright National Electrical Manufacturers Association
Provided by IHS under license with NEMA
No reproduction or networking permitted without license from IHS
Not for Resale

TABLE 1-16
COMPARISON BETWEEN NEMA AND IEC INCREASES AND OVERALL DIAMETERS
(inches)

AWG Size	Nominal Bare	Single Minimum Incr.	Single Maximum O.D.	Heavy Minimum Incr.	Heavy Maximum O.D.	Triple Minimum Incr.	Triple Maximum O.D.	IEC Nominal Dia.**	Grade 1* Minimum Incr.	Grade 1* Maximum O.D.	Grade 2* Minimum Incr.	Grade 2* Maximum O.D.	Grade 3* Minimum Incr.	Grade 3* Maximum O.D.	AWG Size
14	0.0641	0.0016	0.0666	0.0032	0.0682	0.0048	0.0700	0.0630	0.0015	0.0657	0.0028	0.0672	0.0042	0.0685	14
15	0.0571	0.0015	0.0594	0.0030	0.0609	0.0045	0.0627	0.0551	0.0014	0.0578	0.0027	0.0591	0.0041	0.0604	15
16	0.0508	0.0014	0.0531	0.0029	0.0545	0.0043	0.0562	0.0492	0.0014	0.0518	0.0026	0.0531	0.0039	0.0544	16
17	0.0453	0.0014	0.0475	0.0028	0.0488	0.0041	0.0504	0.0441	0.0013	0.0466	0.0026	0.0479	0.0039	0.0491	17
18	0.0403	0.0013	0.0424	0.0026	0.0437	0.0039	0.0452	0.0394	0.0013	0.0418	0.0025	0.0431	0.0037	0.0443	18
19	0.0359	0.0012	0.0379	0.0025	0.0391	0.0037	0.0406	0.0354	0.0013	0.0378	0.0024	0.0389	0.0035	0.0401	19
20	0.0320	0.0012	0.0339	0.0023	0.0351	0.0035	0.0364	0.0315	0.0012	0.0337	0.0022	0.0348	0.0335	0.0359	20
21	0.0285	0.0011	0.0303	0.0022	0.0314	0.0033	0.0326	0.0280	0.0011	0.0300	0.0021	0.0311	0.0031	0.0320	21
22	0.0253	0.0011	0.0270	0.0021	0.0281	0.0032	0.0293	0.0248	0.0011	0.0267	0.0020	0.0277	0.0030	0.0287	22
23	0.0226	0.0010	0.0243	0.0020	0.0253	0.0030	0.0264	0.0220	0.0010	0.0239	0.0019	0.0248	0.0028	0.0257	23
24	0.0201	0.0010	0.0217	0.0019	0.0227	0.0029	0.0238	0.0197	0.0009	0.0214	0.0018	0.0223	0.0026	0.0231	24
25	0.0179	0.0009	0.0194	0.0018	0.0203	0.0027	0.0214	0.0177	0.0009	0.0193	0.0017	0.0202	0.0025	0.0210	25
26	0.0159	0.0009	0.0173	0.0017	0.0182	0.0026	0.0193	0.0157	0.0008	0.0173	0.0016	0.0181	0.0024	0.0188	26
27	0.0142	0.0008	0.0156	0.0016	0.0164	0.0024	0.0173	0.0140	0.0008	0.0154	0.0015	0.0162	0.0022	0.0169	27
28	0.0126	0.0008	0.0140	0.0016	0.0147	0.0023	0.0156	0.0124	0.0007	0.0137	0.0014	0.0144	0.0021	0.0151	28
29	0.0113	0.0007	0.0126	0.0015	0.0133	0.0022	0.0142	0.0110	0.0007	0.0123	0.0013	0.0130	0.0020	0.0136	29
30	0.0100	0.0007	0.0112	0.0014	0.0119	0.0021	0.0128	0.0098	0.0007	0.0111	0.0013	0.0117	0.0019	0.0123	30
31	0.0089	0.0006	0.0100	0.0013	0.0108	0.0017	0.0114	0.0088	0.0006	0.0099	0.0011	0.0105	0.0017	0.0110	31
32	0.0080	0.0006	0.0091	0.0012	0.0098	0.0016	0.0103	0.0079	0.0006	0.0089	0.0011	0.0094	0.0015	0.0099	32
33	0.0071	0.0005	0.0081	0.0011	0.0088	0.0014	0.0092	0.0071	0.0005	0.0080	0.0010	0.0085	0.0014	0.0090	33
34	0.0063	0.0005	0.0072	0.0010	0.0078	0.0013	0.0082	0.0063	0.0005	0.0072	0.0009	0.0076	0.0013	0.0081	34
35	0.0056	0.0004	0.0064	0.0009	0.0070	0.0012	0.0074	0.0055	0.0004	0.0063	0.0008	0.0067	0.0012	0.0071	35
36	0.0050	0.0004	0.0058	0.0008	0.0063	0.0011	0.0067	0.0049	0.0004	0.0057	0.0007	0.0061	0.0011	0.0064	36
37	0.0045	0.0003	0.0052	0.0008	0.0057	0.0010	0.0060	0.0044	0.0004	0.0051	0.0007	0.0055	0.0010	0.0058	37
38	0.0040	0.0003	0.0047	0.0007	0.0051	0.0009	0.0054	0.0039	0.0003	0.0046	0.0006	0.0049	0.0009	0.0052	38
39	0.0035	0.0002	0.0041	0.0006	0.0045	0.0008	0.0048	0.0035	0.0003	0.0041	0.0006	0.0044	0.0009	0.0047	39
40	0.0031	0.0002	0.0037	0.0006	0.0040	0.0008	0.0043	0.0031	0.0003	0.0037	0.0006	0.0040	0.0008	0.0043	40

Table continued on next page

* Minimum increases and maximum overall diameters based upon IEC 317-0-1 and converted to inches using the factor 25.4, exact.

** Nominal diameters are based upon the ISO R-20 series.

STD·NEMA MW 1000-ENGL 1997 ■ 6470247 0510234 T73 ■

TABLE 1-16 (Continued)
(inches)

AWG Size	Nominal Bare	Single		Heavy		Triple		IEC	Grade 1*		Grade 2*		Grade 3*		AWG Size
		Minimum Incr.	Maximum O.D.	Minimum Incr.	Maximum O.D.	Minimum Incr.	Maximum O.D.	Nominal Diameter**	Minimum Incr.	Maximum O.D.	Minimum Incr. †	Maximum O.D.	Minimum Incr. †	Maximum O.D.	
41	0.0028	0.0002	0.0033	0.0005	0.0036	0.0007	0.0039	0.0028	0.0003	0.0033	0.0005	0.0036	0.0007	0.0038	41
42	0.0025	0.0002	0.0030	0.0004	0.0032	0.0007	0.0035	0.0025	0.0002	0.0030	...	0.0033	...	...	42
44	0.0020	0.0001	0.0024	0.0004	0.0027	0.0006	0.0029	0.0020	0.0002	0.0024	...	0.0026	...	...	44
45	0.00176	0.00010	0.00205	0.00030	0.0023	...	...	0.0018	0.0002	0.0022	...	0.0024	...	...	45
46	0.00157	0.00010	0.00185	0.00030	0.0021	...	...	0.0016	0.0002	0.0019	...	0.0021	...	...	46
47	0.00140	0.00010	0.00170	0.00030	0.0019	...	...	0.0014	0.0002	0.0017	...	0.0019	...	...	47
48	0.00124	0.00010	0.00150	0.00020	0.0017	...	...	0.0013	0.0001	0.0015	...	0.0017	...	...	48
49	0.00111	0.00010	0.00130	0.00020	0.0015	...	...	0.0011	0.0001	0.0013	...	0.0015	...	...	49
50	0.00099	0.00010	0.00120	0.00020	0.0014	...	...	0.0010	0.0001	0.0012	...	0.0013	...	...	50
51	0.00088	0.00010	0.00110	...	...	...	...	0.0009	0.0001	0.0011	...	0.0012	...	...	51
52	0.00078	0.00010	0.00100	...	...	...	...	0.0008	0.0001	0.0009	...	0.0011	...	...	52
53	0.00070	0.00005	0.00085	...	...	...	...	0.0007	0.0001	0.00087	...	0.00094	...	...	53
54	0.00062	0.00005	0.00075	...	...	...	...	...	...	...	...	...	...	...	54
55	0.00055	0.00005	0.00070	...	...	...	...	...	...	...	...	...	...	...	55
56	0.00049	0.00005	0.00065	...	...	...	...	...	...	...	...	...	...	...	56

* Minimum increases and maximum overall diameters based upon IEC 317-0-1 and converted to inches using the factor 25.4, exact.
** Nominal diameters are based upon the ISO R-20 series.
† No minimum increases are given for grades 2 and 3 for nominal sizes smaller than 0.071 mm (0.0028 inches) in IEC 317-0-1.

Copyright National Electrical Manufacturers Association
Provided by IHS under license with NEMA
No reproduction or networking permitted without license from IHS
Not for Resale

Copyright National Electrical Manufacturers Association
Provided by IHS under license with NEMA
No reproduction or networking permitted without license from IHS
Not for Resale

TABLE 1-17
COMPARISON BETWEEN NEMA AND IEC INCREASES AND OVERALL DIAMETERS
(millimeters)

AWG Size	Nominal Bare	Single Minimum Incr.	Single Maximum O.D.	Heavy Minimum Incr.	Heavy Maximum O.D.	Triple Minimum Incr.	Triple Maximum O.D.	IEC Nominal Dia.**	Grade 1* Minimum Incr.	Grade 1* Maximum O.D.	Grade 2* Minimum Incr.	Grade 2* Maximum O.D.	Grade 3* Minimum Incr.	Grade 3* Maximum O.D.	AWG Size
14	1.628	0.041	1.692	0.081	1.732	0.122	1.778	1.600	0.038	1.670	0.071	1.706	0.107	1.740	14
15	1.450	0.038	1.509	0.076	1.547	0.114	1.593	1.400	0.036	1.468	0.069	1.502	0.103	1.535	15
16	1.290	0.036	1.349	0.074	1.384	0.109	1.427	1.250	0.035	1.316	0.067	1.349	0.100	1.381	16
17	1.151	0.036	1.206	0.071	1.240	0.104	1.280	1.120	0.034	1.184	0.065	1.217	0.098	1.248	17
18	1.024	0.033	1.077	0.066	1.110	0.099	1.148	1.000	0.034	1.062	0.063	1.094	0.095	1.124	18
19	0.912	0.030	0.963	0.064	0.993	0.094	1.031	0.900	0.032	0.959	0.060	0.989	0.090	1.018	19
20	0.813	0.030	0.861	0.058	0.892	0.089	0.925	0.800	0.030	0.855	0.056	0.884	0.850	0.911	20
21	0.724	0.028	0.770	0.056	0.798	0.084	0.828	0.710	0.028	0.762	0.053	0.789	0.080	0.814	21
22	0.643	0.028	0.686	0.053	0.714	0.081	0.744	0.630	0.027	0.679	0.050	0.704	0.075	0.728	22
23	0.574	0.025	0.617	0.051	0.643	0.076	0.671	0.560	0.025	0.606	0.047	0.630	0.071	0.653	23
24	0.511	0.025	0.551	0.048	0.577	0.074	0.605	0.500	0.024	0.544	0.045	0.566	0.067	0.587	24
25	0.455	0.023	0.493	0.046	0.516	0.069	0.544	0.450	0.022	0.491	0.042	0.513	0.064	0.533	25
26	0.404	0.023	0.439	0.043	0.462	0.066	0.490	0.400	0.021	0.439	0.040	0.459	0.060	0.478	26
27	0.361	0.020	0.396	0.041	0.417	0.061	0.439	0.355	0.020	0.392	0.038	0.411	0.057	0.428	27
28	0.320	0.020	0.356	0.041	0.373	0.058	0.396	0.315	0.019	0.349	0.035	0.367	0.053	0.384	28
29	0.287	0.018	0.320	0.038	0.338	0.056	0.361	0.280	0.018	0.312	0.033	0.329	0.050	0.345	29
30	0.254	0.018	0.284	0.036	0.302	0.053	0.325	0.250	0.017	0.281	0.032	0.297	0.048	0.312	30
31	0.226	0.015	0.254	0.033	0.274	0.043	0.289	0.224	0.015	0.252	0.029	0.266	0.043	0.280	31
32	0.203	0.015	0.231	0.030	0.249	0.039	0.261	0.200	0.014	0.226	0.027	0.239	0.039	0.252	32
33	0.180	0.013	0.206	0.028	0.224	0.036	0.234	0.180	0.013	0.204	0.025	0.217	0.036	0.229	33
34	0.160	0.013	0.183	0.025	0.198	0.033	0.209	0.160	0.012	0.182	0.023	0.194	0.033	0.205	34
35	0.142	0.010	0.163	0.023	0.178	0.030	0.188	0.140	0.011	0.160	0.021	0.171	0.030	0.181	35
36	0.127	0.010	0.147	0.020	0.160	0.028	0.169	0.125	0.010	0.144	0.019	0.154	0.028	0.163	36
37	0.114	0.008	0.132	0.020	0.145	0.026	0.153	0.112	0.009	0.130	0.017	0.139	0.026	0.147	37
38	0.102	0.008	0.119	0.018	0.130	0.023	0.137	0.100	0.008	0.117	0.016	0.125	0.023	0.132	38
39	0.089	0.005	0.104	0.015	0.114	0.022	0.122	0.090	0.008	0.105	0.015	0.113	0.022	0.120	39
40	0.079	0.005	0.094	0.015	0.102	0.020	0.109	0.080	0.007	0.094	0.014	0.101	0.020	0.108	40

Table continued on next page

* Minimum increases and maximum overall diameters based upon IEC 317-0-1.
** Nominal diameters are based upon the ISO R-20 series.

STD.NEMA MW 1000-ENGL 1997 ■ 6470247 0510236 846 ■

TABLE 1-17 (Continued)
(millimeters)

AWG Size	Nominal Bare	Single Minimum Incr.	Single Maximum O.D.	Heavy Minimum Incr.	Heavy Maximum O.D.	Triple Minimum Incr.	Triple Maximum O.D.	IEC Nominal Dia. **	Grade 1* Minimum Incr.	Grade 1* Maximum O.D.	Grade 2* Minimum Incr. †	Grade 2* Maximum O.D.	Grade 3* Minimum Incr. †	Grade 3* Maximum O.D.	AWG Size
41	0.071	0.005	0.084	0.013	0.091	0.018	0.099	0.071	0.007	0.084	0.012	0.091	0.018	0.097	41
42	0.064	0.005	0.076	0.010	0.081	0.017	0.090	0.063	0.006	0.076	...	0.083	...	...	42
43	0.056	0.005	0.066	0.010	0.074	0.015	0.080	0.056	0.006	0.067	...	0.074	...	...	43
44	0.051	0.003	0.061	0.010	0.069	0.014	0.073	0.050	0.005	0.060	...	0.066	...	...	44
45	0.045	0.003	0.052	0.008	0.058	...	...	0.045	0.005	0.055	...	0.061	...	...	45
46	0.040	0.003	0.047	0.008	0.053	...	...	0.040	0.004	0.049	...	0.054	...	...	46
47	0.036	0.003	0.043	0.008	0.048	...	...	0.036	0.004	0.044	...	0.049	...	...	47
48	0.032	0.003	0.038	0.005	0.043	...	...	0.032	0.003	0.039	...	0.043	...	...	48
49	0.028	0.003	0.033	0.005	0.038	...	...	0.028	0.003	0.034	...	0.038	...	...	49
50	0.025	0.003	0.031	0.005	0.036	...	...	0.025	0.003	0.031	...	0.034	...	...	50
51	0.022	0.003	0.028	...	...	...	...	0.022	0.002	0.027	...	0.030	...	...	51
52	0.020	0.003	0.025	...	...	...	...	0.020	0.002	0.024	...	0.027	...	...	52
53	0.018	0.001	0.022	...	...	...	...	0.018	0.002	0.022	...	0.024	...	...	53
54	0.016	0.001	0.019	...	...	...	...	...	...	...	...	...	...	...	54
55	0.014	0.001	0.018	...	...	...	...	...	...	...	...	...	...	...	55
56	0.012	0.001	0.017	...	...	...	...	...	...	...	...	...	...	...	56

* Minimum increases and maximum overall diameters based upon IEC 317-0-1.
** Nominal diameters are based upon the ISO R-20 series.
† No minimum increases are given for grades 2 and 3 for nominal sizes smaller than 0.071 mm in IEC 317-0-1.

Copyright National Electrical Manufacturers Association
Provided by IHS under license with NEMA
No reproduction or networking permitted without license from IHS
Not for Resale

Part 2
PROPERTIES AND REQUIREMENTS

2.1 PROPERTIES AND REQUIREMENTS

All properties and requirements for magnet wire contained in Part 2 shall be as shown in the following specification sheets.

Copyright National Electrical Manufacturers Association
Provided by IHS under license with NEMA
No reproduction or networking permitted without license from IHS

Not for Resale

MW 2-C (Single)
POLYURETHANE, SINGLE FILM INSULATED ROUND COPPER MAGNET WIRE FOR SOLDERABLE APPLICATIONS THERMAL CLASS 105

INSULATING MATERIAL The coating is based on polyurethane resins (1.4.2).

THERMAL CLASS 105°C when tested in accordance with Part 1, para. 1.8 and Part 3, para. 3.58.1.

GENERAL REQUIREMENTS See Part 1.

Properties	Test Procedure, See Part 3, Paragraph	Requirements
DIMENSIONS	3.2.1.1	See Table S (MW 2-C)
ADHERENCE AND FLEXIBILITY	3.3.1	No cracks visible in the film coating
ELONGATION	3.4	Not less than value in Table S (MW 2-C)
HEAT SHOCK	3.5	No cracks visible in the film coating after conditioning at 150°C; exception-use a 6d mandrel for all sizes
SPRINGBACK	3.7.1	Not greater than value in Table S (MW 2-C)
DIELECTRIC STRENGTH	3.8.3	Not less than value in Table S (MW 2-C)
CONTINUITY	3.9.2 3.9.3	25-44 AWG—The number of discontinuities shall not exceed 15 45-56 AWG—The number of discontinuities shall not exceed 25
SOLDERABILITY	3.13	Covered with continuous film of solder after immersion at 360°C for the time specified below: 25-29 AWG 6 seconds 30-36 AWG 5 seconds 37-46 AWG 4 seconds 47-56 AWG 3 seconds
PERIODIC CONFORMANCE TESTS		
THERMOPLASTIC FLOW	3.50	Median not less than 170°C with heavy film insulated 36 AWG
SOLUBILITY	3.51	A specimen of heavy film insulated 36 AWG immersed in xylene shall not soften sufficiently to expose the bare conductor
DIELECTRIC STRENGTH AT RATED TEMPERATURE	3.52	Average not less than 1900 volts with heavy film insulated 36 AWG
SCRAPE RESISTANCE	3.59	Lowest "grams-to-fail" load for any one of the three tests and the average of the three tests shall be not less than the values in Table S (MW 2-C)

Copyright National Electrical Manufacturers Association
Provided by IHS under license with NEMA
No reproduction or networking permitted without license from IHS

Not for Resale

Table S (MW 2-C)
POLYURETHANE, SINGLE FILM INSULATED ROUND COPPER MAGNET WIRE FOR SOLDERABLE APPLICATIONS THERMAL CLASS 105

AWG Size	Bare Wire Diameter, Inches†			Insulation†		Elongation, Minimum Percent	Scrape, Grams to Fail		Springback, Maximum Degrees per Turn	Dielectric Strength, Minimum Breakdown Volts	AWG Size
	Minimum	Nominal	Maximum	Minimum Increase in Diameter, Inches	Maximum Overall Diameter, Inches		Average	Minimum			
25	0.0177	0.0179	0.0180*	0.0009	0.0194	28	350	300	72	2625	25
26	0.0157	0.0159	0.0160*	0.0009	0.0173	27	330	280	76	2550	26
27	0.0141	0.0142	0.0143	0.0008	0.0156	27	310	300	50	2500	27
28	0.0125	0.0126	0.0127	0.0008	0.0140	26	290	285	55	2425	28
29	0.0112	0.0113	0.0114	0.0007	0.0126	26	270	265	61	2375	29
30	0.0099	0.0100	0.0101	0.0007	0.0112	25	255	250	66	2300	30
31	0.0088	0.0089	0.0090	0.0006	0.0100	24	...	...	...	2075	31
32	0.0079	0.0080	0.0081	0.0006	0.0091	24	...	...	...	1850	32
33	0.0070	0.0071	0.0072	0.0005	0.0081	23	...	...	...	1675	33
34	0.0062	0.0063	0.0064	0.0005	0.0072	22	...	...	...	1500	34
35	0.0055	0.0056	0.0057	0.0004	0.0064	21	...	...	...	1325	35
36	0.0049	0.0050	0.0051	0.0004	0.0058	20	...	...	...	1200	36
37	0.0044	0.0045	0.0046	0.0003	0.0052	20	...	...	...	1075	37
38	0.0039	0.0040	0.0041	0.0003	0.0047	19	...	...	...	950	38
39	0.0034	0.0035	0.0036	0.0002	0.0041	18	...	...	...	850	39
40	0.0030	0.0031	0.0032	0.0002	0.0037	17	...	...	...	775	40
41	0.0027	0.0028	0.0029	0.0002	0.0033	17	...	...	...	700	41
42	0.0024	0.0025	0.0026	0.0002	0.0030	16	...	...	...	625	42
43	0.0021	0.0022	0.0023	0.0002	0.0026	15	...	...	...	550	43
44	0.0019	0.0020	0.0021	0.0001	0.0024	14	...	...	...	500	44

	Conductor Resistance at 20°C, Ohms per Foot †, ††						Theoretical Nominal Bare Wire Diameter, Inches†, ††	
	Minimum	Nominal	Maximum					
45	3.080	3.348	3.616	0.00010	0.00205	11	0.00176	45
46	3.870	4.207	4.544	0.00010	0.00185	10	0.00157	46
47	4.868	5.291	5.714	0.00010	0.00170	8	0.00140	47
48	6.205	6.745	7.285	0.00010	0.00150	7	0.00124	48
49	7.744	8.417	9.090	0.00010	0.00130	6	0.00111	49
50	9.734	10.58	11.43	0.00010	0.00120	5	0.00099	50
51	12.32	13.39	14.46	0.00010	0.00110	...	0.00088	51
52	15.69	17.05	18.41	0.00010	0.00100	...	0.00078	52
53	19.48	21.17	22.86	0.00005	0.00085	...	0.00070	53
54	24.82	26.98	29.14	0.00005	0.00075	...	0.00062	54
55	31.54	34.28	37.02	0.00005	0.00070	...	0.00055	55
56	39.73	43.19	46.65	0.00005	0.00065	...	0.00049	56

*This maximum bare wire diameter shall be permitted to be exceeded; see 1.6.7.2.

† For metric equivalent, see Table 1-1.

†† Conductor size tolerance based on resistance; see 1.6.7.3.

Copyright National Electrical Manufacturers Association
Provided by IHS under license with NEMA
No reproduction or networking permitted without license from IHS

Not for Resale

MW 2-C (Heavy)
POLYURETHANE, HEAVY FILM INSULATED ROUND COPPER MAGNET WIRE FOR SOLDERABLE APPLICATIONS THERMAL CLASS 105

INSULATING MATERIALS The coating is based on polyurethane resins (1.4.2).

THERMAL CLASS 105°C when tested in accordance with Part 1, para. 1.8 and Part 3, para. 3.58.1.

GENERAL REQUIREMENTS See Part 1.

Properties	Test Procedure, See Part 3, Paragraph	Requirements
DIMENSIONS	3.2.1.1	See Table H (MW 2-C)
ADHERENCE AND FLEXIBILITY	3.3.1	No cracks visible in the film coating
ELONGATION	3.4	Not less than value in Table H (MW 2-C)
HEAT SHOCK	3.5	No cracks visible in the film coating after conditioning at 150°C; exception-use a 6d mandrel for all sizes
SPRINGBACK	3.7.1	Not greater than value in Table H (MW 2-C)
DIELECTRIC STRENGTH	3.8.3	Not less than value in Table H (MW 2-C)
CONTINUITY	3.9.2 3.9.3	25-44 AWG—The number of discontinuities shall not exceed 5 45-50 AWG—The number of discontinuities shall not exceed 10
SOLDERABILITY	3.13	Covered with continuous film of solder after immersion at 360°C for the time specified below: 25-29 AWG 6 seconds 30-36 AWG 5 seconds 37-46 AWG 4 seconds 47-50 AWG 3 seconds
PERIODIC CONFORMANCE TESTS		
THERMOPLASTIC FLOW	3.50	Median not less than 170°C with heavy film insulated 36 AWG
SOLUBILITY	3.51	A specimen of heavy film insulated 36 AWG immersed in xylene shall not soften sufficiently to expose the bare conductor
DIELECTRIC STRENGTH AT RATED TEMPERATURE	3.52	Average not less than 1900 volts with heavy film insulated 36 AWG
SCRAPE RESISTANCE	3.59	Lowest "grams-to-fail" load for any one of the three tests and the average of the three tests shall be not less than the values in Table H (MW 2-C)

Copyright National Electrical Manufacturers Association
Provided by IHS under license with NEMA
No reproduction or networking permitted without license from IHS

Not for Resale

Table H (MW 2-C)
POLYURETHANE, HEAVY FILM INSULATED ROUND COPPER MAGNET WIRE FOR SOLDERABLE APPLICATIONS THERMAL CLASS 105

AWG Size	Bare Wire Diameter, Inches†			Insulation†		Elongation, Minimum Percent	Scrape, Grams to Fail		Springback, Maximum Degrees per Turn	Dielectric Strength Minimum Breakdown Volts	AWG Size
	Minimum	Nominal	Maximum	Minimum Increase in Diameter, Inches	Maximum Overall Diameter, Inches		Average	Minimum			
25	0.0177	0.0179	0.0180*	0.0018	0.0203	28	720	615	72	4725	25
26	0.0157	0.0159	0.0160*	0.0017	0.0182	27	675	575	76	4600	26
27	0.0141	0.0142	0.0143	0.0016	0.0164	27	635	540	50	4500	27
28	0.0125	0.0126	0.0127	0.0016	0.0147	26	595	510	55	4375	28
29	0.0112	0.0113	0.0114	0.0015	0.0133	26	560	480	61	4250	29
30	0.0099	0.0100	0.0101	0.0014	0.0119	25	525	450	66	4150	30
31	0.0088	0.0089	0.0090	0.0013	0.0108	24	...	...	...	3825	31
32	0.0079	0.0080	0.0081	0.0012	0.0098	24	...	...	...	3525	32
33	0.0070	0.0071	0.0072	0.0011	0.0088	23	...	...	...	3250	33
34	0.0062	0.0063	0.0064	0.0010	0.0078	22	...	...	...	2975	34
35	0.0055	0.0056	0.0057	0.0009	0.0070	21	...	...	...	2750	35
36	0.0049	0.0050	0.0051	0.0008	0.0063	20	...	...	...	2525	36
37	0.0044	0.0045	0.0046	0.0008	0.0057	20	...	...	...	2325	37
38	0.0039	0.0040	0.0041	0.0007	0.0051	19	...	...	...	2150	38
39	0.0034	0.0035	0.0036	0.0006	0.0045	18	...	...	...	1975	39
40	0.0030	0.0031	0.0032	0.0006	0.0040	17	...	...	...	1800	40
41	0.0027	0.0028	0.0029	0.0005	0.0036	17	...	...	...	1675	41
42	0.0024	0.0025	0.0026	0.0004	0.0032	16	...	...	...	1525	42
43	0.0021	0.0022	0.0023	0.0004	0.0029	15	...	...	...	1400	43
44	0.0019	0.0020	0.0021	0.0004	0.0027	14	...	...	...	1300	44
	Conductor Resistance at 20°C, Ohms per Foot †, ††						Theoretical Nominal Bare Wire Diameter, Inches †, ††				
	Minimum	Nominal	Maximum								
45	3.080	3.348	3.616	0.00030	0.00230	11	0.00176				45
46	3.870	4.207	4.544	0.00030	0.00210	10	0.00157				46
47	4.868	5.291	5.714	0.00030	0.00190	8	0.00140				47
48	6.205	6.745	7.285	0.00020	0.00170	7	0.00124				48
49	7.744	8.417	9.090	0.00020	0.00150	6	0.00111				49
50	9.734	10.58	11.43	0.00020	0.00140	5	0.00099				50

* This maximum bare wire diameter shall be permitted to be exceeded; see 1.6.7.2.

† For metric equivalent, see Table 1-2.

†† Conductor size tolerance based on resistance; see 1.6.7.3.

Copyright National Electrical Manufacturers Association
Provided by IHS under license with NEMA
No reproduction or networking permitted without license from IHS

Not for Resale

MW 3-C (Type 1)
POLYURETHANE WITH SELF-BONDING OVERCOAT, TYPE 1 FILM INSULATED ROUND COPPER MAGNET WIRE FOR SOLDERABLE APPLICATIONS THERMAL CLASS 105

INSULATING MATERIAL The conductor shall be coated with a dual film. The underlying coating is based on polyurethane resins (1.4.2). The superimposed coating is based on thermoplastic polyvinyl acetal resins (1.4.2).

THERMAL CLASS 105°C when tested in accordance with Part 1, para. 1.8 and Part 3, para. 3.58.1.

GENERAL REQUIREMENTS See Part 1.

Properties	Test Procedure, See Part 3, Paragraph	Requirements
DIMENSIONS	3.2.1.2	See Table T1 (MW 3-C)
ADHERENCE AND FLEXIBILITY	3.3.1	No cracks visible in the film coating
ELONGATION	3.4	Not less than value in Table T1 (MW 3-C)
HEAT SHOCK	3.5	No cracks visible in the film coating after conditioning at 150°C; exception-use a 6d mandrel for all sizes
SPRINGBACK	3.7	Not greater than value in Table T1 (MW 3-C)
DIELECTRIC STRENGTH	3.8.3	Not less than value in Table T1 (MW 3-C)
CONTINUITY	3.9.2 3.9.3	25-44 AWG—The number of discontinuities shall not exceed 15 45-52 AWG—The number of discontinuities shall not exceed 25
SOLDERABILITY	3.13	Covered with continuous film of solder after immersion at 360°C for the time specified below: 25-29 AWG 6 seconds 30-36 AWG 5 seconds 37-46 AWG 4 seconds 47-52 AWG 3 seconds
PERIODIC CONFORMANCE TESTS		
THERMOPLASTIC FLOW	3.50	Median not less than 170°C with Type 2 film
SOLUBILITY	3.51	A specimen of Type 2 film insulated 36 AWG immersed in xylene shall not soften sufficiently to expose the bare conductor
DIELECTRIC STRENGTH AT RATED TEMPERATURE	3.52	Average not less than 1900 volts with Type 2 film insulated 36 AWG
BOND-ROOM TEMPERATURE	3.57.3	No separation of turns with Type 2 film insulated 26 and 36 AWG

Copyright National Electrical Manufacturers Association
Provided by IHS under license with NEMA
No reproduction or networking permitted without license from IHS

Not for Resale

Table T1 (MW 3-C)
POLYURETHANE WITH SELF-BONDING OVERCOAT, TYPE 1 FILM INSULATED ROUND COPPER MAGNET WIRE FOR SOLDERABLE APPLICATIONS THERMAL CLASS 105

AWG Size	Bare Wire Diameter, Inches†			Insulation†						AWG Size
				Minimum Increase In Diameter, Inches		Maximum Overall Diameter, Inches	Elongation, Minimum Percent	Springback, Maximum Degrees per Turn	Dielectric Strength, Minimum Breakdown Volts	
	Minimum	Nominal	Maximum	Film Coating	Outer Coating					
25	0.0177	0.0179	0.0180*	0.0009	0.0005	0.0203	28	72	2625	25
26	0.0157	0.0159	0.0160*	0.0009	0.0005	0.0182	27	76	2550	26
27	0.0141	0.0142	0.0143	0.0008	0.0005	0.0164	27	50	2500	27
28	0.0125	0.0126	0.0127	0.0008	0.0005	0.0147	26	55	2425	28
29	0.0112	0.0113	0.0114	0.0007	0.0004	0.0133	26	61	2375	29
30	0.0099	0.0100	0.0101	0.0007	0.0004	0.0119	25	66	2075	30
31	0.0088	0.0089	0.0090	0.0006	0.0004	0.0108	24	...	2075	31
32	0.0079	0.0080	0.0081	0.0006	0.0004	0.0098	24	...	1850	32
33	0.0070	0.0071	0.0072	0.0005	0.0004	0.0088	23	...	1675	33
34	0.0062	0.0063	0.0064	0.0005	0.0003	0.0078	22	...	1500	34
35	0.0055	0.0056	0.0057	0.0004	0.0003	0.0070	21	...	1325	35
36	0.0049	0.0050	0.0051	0.0004	0.0003	0.0063	20	...	1200	36
37	0.0044	0.0045	0.0046	0.0003	0.0003	0.0057	20	...	1075	37
38	0.0039	0.0040	0.0041	0.0003	0.0002	0.0051	19	...	950	38
39	0.0034	0.0035	0.0036	0.0002	0.0002	0.0045	18	...	850	39
40	0.0030	0.0031	0.0032	0.0002	0.0002	0.0040	17	...	775	40
41	0.0027	0.0028	0.0029	0.0002	0.0002	0.0036	17	...	700	41
42	0.0024	0.0025	0.0026	0.0002	0.0002	0.0032	16	...	625	42
43	0.0021	0.0022	0.0023	0.0002	0.0001	0.0029	15	...	550	43
44	0.0019	0.0020	0.0021	0.0001	0.0001	0.0027	14	...	500	44
	Conductor Resistance at 20°C, Ohms per Foot †, ††							Theoretical Nominal Bare Wire Diameter, Inches †, ††		
	Minimum	Nominal	Maximum							
45	3.080	3.348	3.616	0.0001	0.0001	0.0023	11	0.00176		45
46	3.870	4.207	4.544	0.0001	0.0001	0.0021	10	0.00157		46
47	4.868	5.291	5.714	0.0001	0.0001	0.0019	8	0.00140		47
48	6.205	6.745	7.285	0.0001	0.0001	0.0017	7	0.00124		48
49	7.744	8.417	9.090	0.0001	0.0001	0.0015	6	0.00111		49
50	9.734	10.58	11.43	0.0001	0.0001	0.0014	5	0.00099		50
51	12.32	13.39	14.46	0.0001	0.0001	0.0013	...	0.00088		51
52	15.69	17.05	18.41	0.0001	0.00005	0.00115	...	0.00078		52

*This maximum bare wire diameter shall be permitted to be exceeded; see 1.6.7.2.
† For metric equivalent, see Table 1-4.
†† Conductor size tolerance based on resistance; see 1.6.7.3.

Copyright National Electrical Manufacturers Association
Provided by IHS under license with NEMA
No reproduction or networking permitted without license from IHS

Not for Resale

MW 3-C (Type 2)
POLYURETHANE WITH SELF-BONDING OVERCOAT, TYPE 2 FILM INSULATED ROUND COPPER MAGNET WIRE FOR SOLDERABLE APPLICATIONS THERMAL CLASS 105

INSULATING MATERIAL The conductor shall be coated with a dual film. The underlying coating is based on polyurethane resins (1.4.2). The superimposed coating is based on thermoplastic polyvinyl acetal resins (1.4.2).

THERMAL CLASS 105°C when tested in accordance with Part 1, para. 1.8 and Part 3, para. 3.58.1.

GENERAL REQUIREMENTS See Part 1.

Properties	Test Procedure, See Part 3, Paragraph	Requirements
DIMENSIONS	3.2.1.2	See Table T2 (MW 3-C)
ADHERENCE AND FLEXIBILITY	3.3.1	No cracks visible in the film coating
ELONGATION	3.4	Not less than value in Table T2 (MW 3-C)
HEAT SHOCK	3.5	No cracks visible in the film coating after conditioning at 150°C; exception-use a 6d mandrel for all sizes
SPRINGBACK	3.7.1	Not greater than value in Table T2 (MW 3-C)
DIELECTRIC STRENGTH	3.8.3	Not less than value in Table T2 (MW 3-C)
CONTINUITY	3.9.2 3.9.3	25-44 AWG—The number of discontinuities shall not exceed 5 45-50 AWG—The number of discontinuities shall not exceed 10
SOLDERABILITY	3.13	Covered with continuous film of solder after immersion at 360°C for the time specified below: 25-29 AWG 6 seconds 30-36 AWG 5 seconds 37-46 AWG 4 seconds 47-50 AWG 3 seconds
PERIODIC CONFORMANCE TESTS		
THERMOPLASTIC FLOW	3.50	Median not less than 170°C with Type 2 film insulated 36 AWG
SOLUBILITY	3.51	A specimen of Type 2 film insulated 36 AWG immersed in xylene shall not soften sufficiently to expose the bare conductor
DIELECTRIC STRENGTH AT RATED TEMPERATURE	3.52	Average not less than 1900 volts with Type 2 film insulated 36 AWG
BOND-ROOM TEMPERATURE	3.57.3	No separation of turns with Type 2 film insulated 26 and 36 AWG

Copyright National Electrical Manufacturers Association
Provided by IHS under license with NEMA
No reproduction or networking permitted without license from IHS

Not for Resale

Table T2 (MW 3-C)
POLYURETHANE WITH SELF-BONDING OVERCOAT, TYPE 2 FILM INSULATED ROUND COPPER MAGNET WIRE FOR SOLDERABLE APPLICATIONS THERMAL CLASS 105

AWG Size	Bare Wire Diameter, Inches†			Insulation†			Elongation, Minimum Percent	Springback, Maximum Degrees per Turn	Dielectric Strength, Minimum Breakdown Volts	AWG Size
				Minimum Increase in Diameter, Inches		Maximum Overall Diameter, Inches				
	Minimum	Nominal	Maximum	Film Coating	Outer Coating					
25	0.0177	0.0179	0.0180*	0.0018	0.0005	0.0214	28	74	4725	25
26	0.0157	0.0159	0.0160*	0.0017	0.0005	0.0193	27	80	4600	26
27	0.0141	0.0142	0.0143	0.0016	0.0005	0.0173	27	55	4500	27
28	0.0125	0.0126	0.0127	0.0016	0.0005	0.0156	26	60	4375	28
29	0.0112	0.0113	0.0114	0.0015	0.0004	0.0142	26	65	4250	29
30	0.0099	0.0100	0.0101	0.0014	0.0004	0.0128	25	70	4150	30
31	0.0088	0.0089	0.0090	0.0013	0.0004	0.0115	24	...	3825	31
32	0.0079	0.0080	0.0081	0.0012	0.0004	0.0105	24	...	3525	32
33	0.0070	0.0071	0.0072	0.0011	0.0004	0.0095	23	...	3250	33
34	0.0062	0.0063	0.0064	0.0010	0.0003	0.0084	22	...	2975	34
35	0.0055	0.0056	0.0057	0.0009	0.0003	0.0076	21	...	2750	35
36	0.0049	0.0050	0.0051	0.0008	0.0003	0.0069	20	...	2525	36
37	0.0044	0.0045	0.0046	0.0008	0.0003	0.0062	20	...	2325	37
38	0.0039	0.0040	0.0041	0.0007	0.0002	0.0056	19	...	2150	38
39	0.0034	0.0035	0.0036	0.0007	0.0002	0.0050	18	...	1975	39
40	0.0030	0.0031	0.0032	0.0006	0.0002	0.0044	17	...	1800	40
41	0.0027	0.0028	0.0029	0.0005	0.0002	0.0040	17	...	1675	41
42	0.0024	0.0025	0.0026	0.0004	0.0002	0.0037	16	...	1525	42
43	0.0021	0.0022	0.0023	0.0004	0.0001	0.0033	15	...	1400	43
44	0.0019	0.0020	0.0021	0.0004	0.0001	0.0030	14	...	1300	44
45	Conductor resistance at 20°C, Ohms per Foot †, ††			0.0003	0.0001	0.00255	11	Theoretical Nominal Bare Wire Diameter, Inches †, ††		45
	Minimum	Nominal	Maximum							
	3.080	3.348	3.616					0.00176		
46	3.870	4.207	4.544	0.0003	0.0001	0.00235	10	0.00157		46
47	4.868	5.291	5.714	0.0003	0.0001	0.00210	8	0.00140		47
48	6.205	6.745	7.285	0.0002	0.0001	0.00185	7	0.00124		48
49	7.744	8.417	9.090	0.0002	0.0001	0.00170	6	0.00111		49
50	9.734	10.58	11.43	0.0002	0.0001	0.00160	5	0.00099		50

*Maximum bare wire diameter shall be permitted to be exceeded; see 1.6.7.2.
† For metric equivalent, see Table 1-5.
†† Conductor size tolerance based on resistance; see 1.6.7.3.

Copyright National Electrical Manufacturers Association
Provided by IHS under license with NEMA
No reproduction or networking permitted without license from IHS

Not for Resale

MW 5-C (Single)
POLYESTER, SINGLE FILM INSULATED ROUND COPPER MAGNET WIRE THERMAL CLASS 155

INSULATING MATERIAL The coating is based on polyester resins (1.4.2).

THERMAL CLASS 155°C when tested in accordance with Part 1, para. 1.8 and Part 3, para. 3.58.1.

GENERAL REQUIREMENTS See Part 1.

Properties	Test Procedure, See Part 3, Paragraph	Requirements
DIMENSIONS	3.2.1.1	See Table S (MW 5-C)
ADHERENCE AND FLEXIBILITY	3.3.1	No cracks visible in the film coating
ELONGATION	3.4	Not less than value in Table S (MW 5-C)
HEAT SHOCK	3.5	No cracks visible in the film coating after conditioning at 175°C
SPRINGBACK	3.7.1	Not greater than value in Table S (MW 5-C)
DIELECTRIC STRENGTH	3.8.3	Not less than value in Table S (MW 5-C)
CONTINUITY	3.9.2 3.9.3	25-44 AWG—The number of discontinuities shall not exceed 15 45-50 AWG—The number of discontinuities shall not exceed 25
PERIODIC CONFORMANCE TESTS		
THERMOPLASTIC FLOW	3.50	Median not less than 250°C with heavy film insulated 18 or 36 AWG
SOLUBILITY	3.51	A specimen of heavy film insulated 18 or 36 AWG immersed in xylene shall not soften sufficiently to expose the bare conductor
DIELECTRIC STRENGTH AT RATED TEMPERATURE	3.52	Heavy film insulated wire shall average not less than 4275 volts for 18 AWG or 1900 volts for 36 AWG
SCRAPE RESISTANCE	3.59	Lowest "grams-to-fail" load for any one of the three tests and the average of the three tests shall be not less than the values in Table S (MW 5-C)

Copyright National Electrical Manufacturers Association
Provided by IHS under license with NEMA
No reproduction or networking permitted without license from IHS

Not for Resale

Table S (MW 5-C)
POLYESTER, SINGLE FILM INSULATED ROUND COPPER MAGNET WIRE THERMAL CLASS 155

AWG Size	Bare Wire Diameter, Inches†			Insulation†		Elongation, Minimum Percent	Scrape, Grams to Fail		Springback, Maximum Degrees per Turn	Dielectric Strength, Minimum Breakdown Volts	AWG Size
	Minimum	Nominal	Maximum	Minimum Increase in Diameter, Inches	Maximum Overall Diameter, Inches		Average	Minimum			
25	0.0177	0.0179	0.0180*	0.0009	0.0194	28	400	340	72	2625	25
26	0.0157	0.0159	0.0160*	0.0009	0.0173	27	380	325	76	2550	26
27	0.0141	0.0142	0.0143	0.0008	0.0156	27	355	300	50	2500	27
28	0.0125	0.0126	0.0127	0.0008	0.0140	26	335	285	55	2425	28
29	0.0112	0.0113	0.0114	0.0015	0.0126	26	310	265	61	2375	29
30	0.0099	0.0100	0.0101	0.0014	0.0112	25	295	250	66	2300	30
31	0.0088	0.0089	0.0090	0.0013	0.0100	24	...	...	...	2075	31
32	0.0079	0.0080	0.0081	0.0012	0.0091	24	...	...	...	1850	32
33	0.0070	0.0071	0.0072	0.0011	0.0081	23	...	...	...	1675	33
34	0.0062	0.0063	0.0064	0.0010	0.0072	22	...	...	...	1500	34
35	0.0055	0.0056	0.0057	0.0009	0.0064	21	...	...	...	1325	35
36	0.0049	0.0050	0.0051	0.0008	0.0058	20	...	...	...	1200	36
37	0.0044	0.0045	0.0046	0.0008	0.0052	20	...	...	...	1075	37
38	0.0039	0.0040	0.0041	0.0007	0.0047	19	...	...	...	950	38
39	0.0034	0.0035	0.0036	0.0006	0.0041	18	...	...	...	850	39
40	0.0030	0.0031	0.0032	0.0006	0.0037	17	...	...	...	775	40
41	0.0027	0.0028	0.0029	0.0005	0.0033	17	...	...	...	700	41
42	0.0024	0.0025	0.0026	0.0004	0.0030	16	...	...	...	625	42
43	0.0021	0.0022	0.0023	0.0004	0.0026	15	...	...	...	550	43
44	0.0019	0.0020	0.0021	0.0004	0.0024	14	...	...	...	500	44

	Conductor Resistance at 20° C, Ohms per Foot †, ††						Theoretical Nominal Bare Wire Diameter, Inches †, ††	
	Minimum	Nominal	Maximum					
45	3.080	3.348	3.616	0.0003	0.0205	11	0.00176	45
46	3.870	4.207	4.544	0.0003	0.0185	10	0.00157	46
47	4.868	5.291	5.714	0.0003	0.0170	8	0.00140	47
48	6.205	6.745	7.285	0.0002	0.0150	7	0.00124	48
49	7.744	8.417	9.090	0.0002	0.0130	6	0.00111	49
50	9.734	10.58	11.43	0.0001	0.0120	5	0.00099	50

* This maximum bare wire diameter shall be permitted to be exceeded; see 1.6.7.2.

† For metric equivalents, see Table 1-1.

††Conductor size tolerance based on resistance; see 1.6.7.3.

Copyright National Electrical Manufacturers Association
Provided by IHS under license with NEMA
No reproduction or networking permitted without license from IHS

Not for Resale

MW 5-C (Heavy)
POLYESTER, HEAVY FILM INSULATED ROUND COPPER MAGNET WIRE THERMAL CLASS 155

INSULATING MATERIAL The coating is based on polyester resins (1.4.2).

THERMAL CLASS 155°C when tested in accordance with Part 1, para. 1.8 and Part 3, para. 3.58.1.

GENERAL REQUIREMENTS See Part 1.

Properties	Test Procedure, See Part 3, Paragraph	Requirements
DIMENSIONS	3.2.1.1	See Table H (MW 5-C)
ADHERENCE AND FLEXIBILITY	3.3.1	No cracks visible in the film coating
ELONGATION	3.4	Not less than value in Table H (MW 5-C)
HEAT SHOCK	3.5	No cracks visible in the film coating after conditioning at 175°C
SPRINGBACK	3.7.1	Not greater than value in Table H (MW 5-C)
DIELECTRIC STRENGTH	3.8.3	Not less than value in Table H (MW 5-C)
CONTINUITY	3.9.2 3.9.3	25-44 AWG—The number of discontinuities shall not exceed 5 45-50 AWG—The number of discontinuities shall not exceed 10
PERIODIC CONFORMANCE TESTS		
THERMOPLASTIC FLOW	3.50	Median not less than 250°C with heavy film insulated 18 or 36 AWG
SOLUBILITY	3.51	A specimen of heavy film insulated 18 or 36 AWG immersed in xylene shall not soften sufficiently to expose the bare conductor
DIELECTRIC STRENGTH AT RATED TEMPERATURE	3.52	Heavy film insulated wire shall average not less than 4275 volts for 18 AWG or 1900 volts for 36 AWG
SCRAPE RESISTANCE	3.59	Lowest "grams-to-fail" load for any one of the three tests and the average of the three tests shall be not less than the values in Table H (MW 5-C)

Copyright National Electrical Manufacturers Association
Provided by IHS under license with NEMA
No reproduction or networking permitted without license from IHS

Not for Resale

Table H (MW 5-C)
POLYESTER, HEAVY FILM INSULATED ROUND COPPER MAGNET WIRE THERMAL CLASS 155

AWG Size	Bare Wire Diameter, Inches†			Insulation†		Elongation, Minimum Percent	Scrape, Grams to Fail		Springback, Maximum Degrees per Turn	Dielectric Strength, Minimum Breakdown Volts	AWG Size
	Minimum	Nominal	Maximum	Minimum Increase in Diameter, Inches	Maximum Overall Diameter, Inches		Average	Minimum			
25	0.0177	0.0179	0.0180*	0.0018	0.0203	28	720	615	72	4725	25
26	0.0157	0.0159	0.0160*	0.0017	0.0182	27	675	575	76	4600	26
27	0.0141	0.0142	0.0143	0.0016	0.0164	27	635	540	50	4500	27
28	0.0125	0.0126	0.0127	0.0016	0.0147	26	595	510	55	4375	28
29	0.0112	0.0113	0.0114	0.0015	0.0133	26	560	480	61	4250	29
30	0.0099	0.0100	0.0101	0.0014	0.0119	25	525	450	66	4150	30
31	0.0088	0.0089	0.0090	0.0013	0.0108	24	...	...	...	3825	31
32	0.0079	0.0080	0.0081	0.0012	0.0098	24	...	...	...	3525	32
33	0.0070	0.0071	0.0072	0.0011	0.0088	23	...	...	...	3250	33
34	0.0062	0.0063	0.0064	0.0010	0.0078	22	...	...	...	2975	34
35	0.0055	0.0056	0.0057	0.0009	0.0070	21	...	...	...	2750	35
36	0.0049	0.0050	0.0051	0.0008	0.0063	20	...	...	...	2525	36
37	0.0044	0.0045	0.0046	0.0008	0.0057	20	...	...	...	2325	37
38	0.0039	0.0040	0.0041	0.0007	0.0051	19	...	...	...	2150	38
39	0.0034	0.0035	0.0036	0.0006	0.0045	18	...	...	...	1975	39
40	0.0030	0.0031	0.0032	0.0006	0.0040	17	...	...	...	1800	40
41	0.0027	0.0028	0.0029	0.0005	0.0036	17	...	...	...	1675	41
42	0.0024	0.0025	0.0026	0.0004	0.0032	16	...	...	...	1525	42
43	0.0021	0.0022	0.0023	0.0004	0.0029	15	...	...	...	1400	43
44	0.0019	0.0020	0.0021	0.0004	0.0027	14	...	...	...	1300	44
	Conductor Resistance at 20°C, Ohms per Foot †, ††						Theoretical Nominal Bare, Wire Diameter, Inches †, ††				
	Minimum	Nominal	Maximum								
45	3.080	3.348	3.616	0.0001	0.00230	11	0.00176				45
46	3.870	4.207	4.544	0.0001	0.00210	10	0.00157				46
47	4.868	5.291	5.714	0.0001	0.00190	8	0.00140				47
48	6.205	6.745	7.285	0.0001	0.00170	7	0.00124				48
49	7.744	8.417	9.090	0.0001	0.00150	6	0.00111				49
50	9.734	10.58	11.43	0.0001	0.00140	5	0.00099				50

* This maximum bare wire diameter shall be permitted to be exceeded; see 1.6.7.2.
† For metric equivalents, see Table 1-2.
†† Conductor size tolerance based on resistance; see 1.6.7.3.

Copyright National Electrical Manufacturers Association
Provided by IHS under license with NEMA
No reproduction or networking permitted without license from IHS

Not for Resale

MW 6-C (Single)
POLYAMIDE, SINGLE FILM INSULATED ROUND COPPER MAGNET WIRE THERMAL CLASS 105

INSULATING MATERIAL The coating is based on polyamide resins (1.4.2).

THERMAL CLASS 105°C when tested in accordance with Part 1, para. 1.8 and Part 3, para. 3.58.1.

GENERAL REQUIREMENTS See Part 1.

Properties	Test Procedure, See Part 3, Paragraph	Requirements
DIMENSIONS	3.2.1.1	See Table S (MW 6-C)
ADHERENCE AND FLEXIBILITY	3.3.1	No cracks visible in the film coating
ELONGATION	3.4	Not less than value in Table S (MW 6-C)
HEAT SHOCK	3.5	No cracks visible in the film coating after conditioning at 175°C
SPRINGBACK	3.7.1	Not greater than value in Table S (MW 6-C)
DIELECTRIC STRENGTH	3.8.3	Not less than value in Table S (MW 6-C)
CONTINUITY	3.9.2	The number of discontinuities shall not exceed 15.
SOLDERABILITY	3.13	Covered with continuous film of solder after immersion as follows: 14-19 AWG 10 seconds at 430°C 20-23 AWG 8 seconds at 430°C 24-29 AWG 6 seconds at 360°C 30-36 AWG 5 seconds at 360°C 37-44 AWG 4 seconds at 360°C
PERIODIC CONFORMANCE TESTS		
THERMOPLASTIC FLOW	3.50	Median not less than 170°C with heavy film insulated 18 AWG
SOLUBILITY	3.51	A specimen of heavy film insulated 18 or 36 AWG immersed in xylene shall not soften sufficiently to expose the bare conductor
DIELECTRIC STRENGTH AT RATED TEMPERATURE	3.52	Heavy film insulated wire shall average not less 3825 volts for 18 AWG or 1725 volts for 36 AWG

Copyright National Electrical Manufacturers Association
Provided by IHS under license with NEMA
No reproduction or networking permitted without license from IHS

Not for Resale

Table S (MW 6-C)
POLYAMIDE, SINGLE FILM INSULATED ROUND COPPER MAGNET WIRE THERMAL CLASS 105

AWG Size	Bare Wire Diameter, Inches†			Insulation†		Elongation, Minimum Percent	Springback, Maximum Degrees per Turn	Dielectric Strength, Minimum Breakdown Volts	AWG Size
	Minimum	Nominal	Maximum	Minimum Increase in Diameter, Inches	Maximum Overall Diameter, Inches				
14	0.0635	0.0641	0.0644*	0.0016	0.0666	33	42	3175	14
15	0.0565	0.0571	0.0574*	0.0015	0.0594	33	46	3075	15
16	0.0503	0.0508	0.0511*	0.0014	0.0531	33	50	3000	16
17	0.0448	0.0453	0.0455*	0.0014	0.0475	32	54	2925	17
18	0.0399	0.0403	0.0405*	0.0013	0.0424	32	58	2850	18
19	0.0355	0.0359	0.0361*	0.0012	0.0379	31	62	2775	19
20	0.0317	0.0320	0.0322*	0.0012	0.0339	30	66	2700	20
21	0.0282	0.0285	0.0286*	0.0011	0.0303	30	53	2625	21
22	0.0250	0.0253	0.0254*	0.0011	0.0270	29	58	2575	22
23	0.0224	0.0226	0.0227*	0.0010	0.0243	29	62	2500	23
24	0.0199	0.0201	0.0202*	0.0010	0.0217	28	67	2425	24
25	0.0177	0.0179	0.0180*	0.0009	0.0194	28	72	2375	25
26	0.0157	0.0159	0.0160*	0.0009	0.0173	27	76	2300	26
27	0.0141	0.0142	0.0143	0.0008	0.0156	27	50	2250	27
28	0.0125	0.0126	0.0127	0.0008	0.0140	26	55	2175	28
29	0.0112	0.0113	0.0114	0.0007	0.0126	26	61	2150	29
30	0.0099	0.0100	0.0101	0.0007	0.0112	25	66	2075	30
31	0.0088	0.0089	0.0090	0.0006	0.0100	24	...	1875	31
32	0.0079	0.0080	0.0081	0.0006	0.0091	24	...	1675	32
33	0.0070	0.0071	0.0072	0.0005	0.0081	23	...	1500	33
34	0.0062	0.0063	0.0064	0.0005	0.0072	22	...	1350	34
35	0.0055	0.0056	0.0057	0.0004	0.0064	21	...	1200	35
36	0.0049	0.0050	0.0051	0.0004	0.0058	20	...	1075	36
37	0.0044	0.0045	0.0046	0.0003	0.0052	20	...	975	37
38	0.0039	0.0040	0.0041	0.0003	0.0047	19	...	850	38
39	0.0034	0.0035	0.0036	0.0002	0.0041	18	...	775	39
40	0.0030	0.0031	0.0032	0.0002	0.0037	17	...	700	40
41	0.0027	0.0028	0.0029	0.0002	0.0033	17	...	625	41
42	0.0024	0.0025	0.0026	0.0002	0.0030	16	...	575	42
43	0.0021	0.0022	0.0023	0.0002	0.0026	15	...	500	43
44	0.0019	0.0020	0.0021	0.0001	0.0024	14	...	450	44

* This maximum bare wire diameter shall be permitted to be exceeded; see 1.6.7.2.
† For metric equivalents, see Table 1-1.

Copyright National Electrical Manufacturers Association
Provided by IHS under license with NEMA
No reproduction or networking permitted without license from IHS

Not for Resale

MW 6-C (Heavy)
POLYAMIDE, HEAVY FILM INSULATED ROUND COPPER MAGNET WIRE THERMAL CLASS 105

INSULATING MATERIAL The coating is based on polyamide resins (1.4.2).

THERMAL CLASS 105°C when tested in accordance with Part 1, para. 1.8 and Part 3, para. 3.58.1.

GENERAL REQUIREMENTS See Part 1.

Properties	Test Procedure, See Part 3, Paragraph	Requirements
DIMENSIONS	3.2.1.1	See Table H (MW 6-C)
ADHERENCE AND FLEXIBILITY	3.3.1	No cracks visible in the film coating
ELONGATION	3.4	Not less than value in Table H (MW 6-C)
HEAT SHOCK	3.5	No cracks visible in the film coating after conditioning at 175°C
SPRINGBACK	3.7.1	Not greater than value in Table H (MW 6-C)
DIELECTRIC STRENGTH	3.8.3	Not less than value in Table H (MW 6-C)
CONTINUITY	3.9.2	The number of discontinuities shall not exceed 5
SOLDERABILITY	3.13	Covered with continuous film of solder after immersion as follows: 14-19 AWG 10 seconds at 430°C 20-23 AWG 8 seconds at 430°C 24-29 AWG 6 seconds at 360°C 30-36 AWG 5 seconds at 360°C 37-44 AWG 4 seconds at 360°C
PERIODIC CONFORMANCE TESTS		
THERMOPLASTIC FLOW	3.50	Median not less than 170°C with heavy film insulated 18 or 36 AWG
SOLUBILITY	3.51	A specimen of heavy film insulated 18 or 36 AWG immersed in xylene shall not soften sufficiently to expose the bare conductor
DIELECTRIC STRENGTH AT RATED TEMPERATURE	3.52	Heavy film insulated wire shall average not less than 3825 volts for 18 AWG or 1725 volts for 36 AWG

Copyright National Electrical Manufacturers Association
Provided by IHS under license with NEMA
No reproduction or networking permitted without license from IHS

Not for Resale

Table H (MW 6-C)
POLYAMIDE, HEAVY FILM INSULATED ROUND COPPER MAGNET WIRE THERMAL CLASS 105

AWG Size	Bare Wire Diameter, Inches†			Insulation†		Elongation, Minimum Percent	Springback, Maximum Degrees per Turn	Dielectric Strength, Minimum Breakdown Volts	AWG Size
	Minimum	Nominal	Maximum	Minimum Increase in Diameter, Inches	Maximum Overall Diameter, Inches				
14	0.0635	0.0641	0.0644*	0.0032	0.0682	33	42	5700	14
15	0.0565	0.0571	0.0574*	0.0030	0.0609	33	46	5550	15
16	0.0503	0.0508	0.0511*	0.0029	0.0545	33	50	5400	16
17	0.0448	0.0453	0.0455*	0.0028	0.0488	32	54	5275	17
18	0.0399	0.0403	0.0405*	0.0026	0.0437	32	58	5125	18
19	0.0355	0.0359	0.0361*	0.0025	0.0391	31	62	5000	19
20	0.0317	0.0320	0.0322*	0.0023	0.0351	30	66	4850	20
21	0.0282	0.0285	0.0286*	0.0022	0.0314	30	53	4725	21
22	0.0250	0.0253	0.0254*	0.0021	0.0281	29	58	4625	22
23	0.0224	0.0226	0.0227*	0.0020	0.0253	29	62	4500	23
24	0.0199	0.0201	0.0202*	0.0019	0.0227	28	67	4375	24
25	0.0177	0.0179	0.0180*	0.0018	0.0203	28	72	4250	25
26	0.0157	0.0159	0.0160*	0.0017	0.0182	27	76	4150	26
27	0.0141	0.0142	0.0143	0.0016	0.0164	27	50	4050	27
28	0.0125	0.0126	0.0127	0.0016	0.0147	26	55	3950	28
29	0.0112	0.0113	0.0114	0.0015	0.0133	26	61	3825	29
30	0.0099	0.0100	0.0101	0.0014	0.0119	25	66	3725	30
31	0.0088	0.0089	0.0090	0.0013	0.0108	24	...	3450	31
32	0.0079	0.0080	0.0081	0.0012	0.0098	24	...	3175	32
33	0.0070	0.0071	0.0072	0.0011	0.0088	23	...	2925	33
34	0.0062	0.0063	0.0064	0.0010	0.0078	22	...	2675	34
35	0.0055	0.0056	0.0057	0.0009	0.0070	21	...	2475	35
36	0.0049	0.0050	0.0051	0.0008	0.0063	20	...	2275	36
37	0.0040	0.0045	0.0046	0.0008	0.0057	20	...	2100	37
38	0.0039	0.0040	0.0041	0.0007	0.0051	19	...	1925	38
39	0.0034	0.0035	0.0036	0.0006	0.0045	18	...	1775	39
40	0.0030	0.0031	0.0032	0.0006	0.0040	17	...	1625	40
41	0.0027	0.0028	0.0029	0.0005	0.0036	17	...	1500	41
42	0.0024	0.0025	0.0026	0.0004	0.0032	16	...	1375	42
42	0.0021	0.0022	0.0023	0.0004	0.0029	15	...	1250	43
44	0.0019	0.0020	0.0021	0.0004	0.0027	14	...	1175	44

* This maximum bare wire diameter shall be permitted to be exceeded; see 1.6.7.2.
† For metric equivalents, Table 1-2.

Copyright National Electrical Manufacturers Association
Provided by IHS under license with NEMA
No reproduction or networking permitted without license from IHS

Not for Resale

MW 9-C (Single)
EPOXY, SINGLE FILM INSULATED ROUND COPPER MAGNET WIRE THERMAL CLASS 130

INSULATING MATERIAL The coating is based on epoxy resins (1.4.2).

THERMAL CLASS 130°C when tested in accordance with Part 1, para. 1.8 and Part 3, para. 3.58.1.

GENERAL REQUIREMENTS See Part 1.

Properties	Test Procedure, See Part 3, Paragraph	Requirements
DIMENSIONS	3.2.1.1	See Table S (MW 9-C)
ADHERENCE AND FLEXIBILITY	3.3.1	No cracks visible in the film coating
ELONGATION	3.4	Not less than value in Table S (MW 9-C)
HEAT SHOCK	3.5	No cracks visible in the film coating after conditioning at 175°C
SPRINGBACK	3.7.1	Not greater than value in Table S (MW 9-C)
DIELECTRIC STRENGTH	3.8.3	Not less than value in Table S (MW 9-C)
CONTINUITY	3.9.2 3.9.3	14-44 AWG—The number of discontinuities shall not exceed 15 45-50 AWG—The number of discontinuities shall not exceed 25
PERIODIC CONFORMANCE TESTS		
THERMOPLASTIC FLOW	3.50	Median not less than 170°C with heavy film insulated 18 or 36 AWG
SOLUBILITY	3.51	A specimen of heavy film insulated 18 or 36 AWG immersed in xylene shall not soften sufficiently to expose the bare conductor
DIELECTRIC STRENGTH AT RATED TEMPERATURE	3.52	Heavy film insulated wire shall average not less than 4275 volts for 18 AWG or 1900 volts for 36 AWG
TRANSFORMER OIL RESISTANCE	3.54	Heavy film insulated wire shall average not less than 5700 volts for 18 AWG
SCRAPE RESISTANCE	3.59	Lowest "grams-to-fail" load for any of the three tests and the average of the three tests shall be not less than the values in Table S (MW 9-C)

Copyright National Electrical Manufacturers Association
Provided by IHS under license with NEMA
No reproduction or networking permitted without license from IHS

Not for Resale

Table S (MW 9-C)
EPOXY, SINGLE FILM INSULATED ROUND COPPER MAGNET WIRE THERMAL CLASS 130

AWG Size	Bare Wire Diameter, Inches†			Insulation†		Elongation, Minimum	Scrape, Grams to Fail		Springback, Maximum Degrees	Dielectric Strength, Minimum Breakdown	AWG Size
	Minimum	Nominal	Maximum	Minimum Increase in Diameter, Inches	Maximum Overall Diameter, Inches	Percent	Average	Minimum	per Turn	Volts	
14	0.0635	0.0641	0.0644*	0.0016	0.0666	33	840	715	42	3525	14
15	0.0565	0.0571	0.0574*	0.0015	0.0594	33	780	665	46	3425	15
16	0.0503	0.0508	0.0511*	0.0014	0.0531	33	735	625	50	3325	16
17	0.0448	0.0453	0.0455*	0.0014	0.0475	32	690	585	54	3250	17
18	0.0399	0.0403	0.0405*	0.0013	0.0424	32	645	550	58	3175	18
19	0.0355	0.0359	0.0361*	0.0012	0.0379	31	600	510	62	3075	19
20	0.0317	0.0320	0.0322*	0.0012	0.0339	30	560	475	66	3000	20
21	0.0282	0.0285	0.0286*	0.0011	0.0303	30	525	445	53	2925	21
22	0.0250	0.0253	0.0254*	0.0011	0.0270	29	490	415	58	2850	22
23	0.0224	0.0226	0.0227*	0.0010	0.0243	29	460	390	62	2775	23
24	0.0199	0.0201	0.0202*	0.0010	0.0217	28	430	365	67	2700	24
25	0.0177	0.0179	0.0180*	0.0009	0.0194	28	400	340	72	2625	25
26	0.0157	0.0159	0.0160*	0.0009	0.0173	27	380	325	76	2550	26
27	0.0141	0.0142	0.0143	0.0008	0.0156	27	355	300	50	2500	27
28	0.0125	0.0126	0.0127	0.0008	0.0140	26	335	285	55	2425	28
29	0.0112	0.0113	0.0114	0.0007	0.0126	26	310	265	61	2375	29
30	0.0099	0.0100	0.0101	0.0007	0.0112	25	295	250	66	2300	30
31	0.0088	0.0089	0.0090	0.0006	0.0100	24	...	...	...	2075	31
32	0.0079	0.0080	0.0081	0.0006	0.0091	24	...	...	...	1850	32
33	0.0070	0.0071	0.0072	0.0005	0.0081	23	...	...	...	1675	33
34	0.0062	0.0063	0.0064	0.0005	0.0072	22	...	...	...	1500	34
35	0.0055	0.0056	0.0057	0.0004	0.0064	21	...	...	...	1325	35
36	0.0049	0.0050	0.0051	0.0004	0.0058	20	...	...	...	1200	36
37	0.0044	0.0045	0.0046	0.0003	0.0052	20	...	...	...	1075	37
38	0.0039	0.0040	0.0041	0.0003	0.0047	19	...	...	...	950	38
39	0.0034	0.0035	0.0036	0.0002	0.0041	18	...	...	...	850	39
40	0.0030	0.0031	0.0032	0.0002	0.0037	17	...	...	...	775	40
41	0.0027	0.0028	0.0029	0.0002	0.0033	17	...	...	...	700	41
42	0.0024	0.0025	0.0026	0.0002	0.0030	16	...	...	...	625	42
42	0.0021	0.0022	0.0023	0.0002	0.0026	15	...	...	...	550	43
44	0.0019	0.0020	0.0021	0.0001	0.0024	14	...	...	...	500	44
	Conductor Resistance at 20°C, Ohms per Foot †, ††						Theoretical Nominal Bare Wire Diameter, Inches †, ††				
	Minimum	Nominal	Maximum								
45	3.080	3.348	3.616	0.00010	0.00205	11	0.00176				45
46	3.870	4.207	4.544	0.00010	0.00185	10	0.00157				46
47	4.868	5.291	5.714	0.00010	0.00170	8	0.00140				47
48	6.205	6.745	7.285	0.00010	0.00150	7	0.00124				48
49	7.744	8.417	9.090	0.00010	0.00130	6	0.00111				49
50	9.734	10.58	11.43	0.00010	0.00120	5	0.00099				50

* This maximum bare wire diameter shall be permitted to be exceeded; see 1.6.7.2.

† For metric equivalents, see Table 1-1.

†† Conductor size tolerance based on resistance; see 1.6.7.3.

Copyright National Electrical Manufacturers Association
Provided by IHS under license with NEMA
No reproduction or networking permitted without license from IHS

Not for Resale

MW 9-C (Heavy)
EPOXY, HEAVY FILM INSULATED ROUND COPPER MAGNET WIRE THERMAL CLASS 130

INSULATING MATERIAL The coating is based on epoxy resins (1.4.2).

THERMAL CLASS 130°C when tested in accordance with Part 1, para. 1.8 and Part 3, para. 3.58.1.

GENERAL REQUIREMENTS See Part 1.

Properties	Test Procedure, See Part 3, Paragraph	Requirements
DIMENSIONS	3.2.1.1	See Table H (MW 9-C)
ADHERENCE AND FLEXIBILITY	3.3.1	No cracks visible in the film coating
ELONGATION	3.4	Not less than value in Table H (MW 9-C)
HEAT SHOCK	3.5	No cracks visible in the film coating after conditioning at 175°C
SPRINGBACK	3.7.1 3.7.2	14-30 AWG —Not greater than the value in Table H (MW 9-C) Larger than 14 AWG—Not greater than 5°
DIELECTRIC SRENGTH	3.8.2 3.8.3	4-9 AWG—Not less than value in Table H (MW 9-C) 10-44 AWG—Not less than value in Table H (MW 9-C)
CONTINUITY	3.9.2 3.9.3	14-44 AWG—The number of discontinuities shall not exceed 5 45-50 AWG—The number of discontinuities shall not exceed 10
PERIODIC CONFORMANCE TESTS		
THERMOPLASTIC FLOW	3.50	Median not less than 170°C with heavy film insulated 18 or 36 AWG
SOLUBILITY	3.51	A specimen of heavy film insulated 18 or 36 AWG immersed in xylene shall not soften sufficiently to expose the bare conductor
DIELECTRIC STRENGTH AT RATED TEMPERATURE	3.52	Heavy film insulated wire shall average not less than 4275 volts for 18 AWG or 1900 volts for 36 AWG
TRANSFORMER OIL RESISTANCE	3.54	Heavy film insulated wire shall average not less than 5700 volts for 18 AWG
SCRAPE RESISTANCE	3.59	Lowest "grams-to-fail" load for any of the three tests and the average of the three tests shall be not less than the values in Table H (MW 9-C)

Copyright National Electrical Manufacturers Association
Provided by IHS under license with NEMA
No reproduction or networking permitted without license from IHS
Not for Resale

Table H (MW 9-C)
EPOXY, HEAVY FILM INSULATED ROUND COPPER MAGNET WIRE THERMAL CLASS 130

AWG Size	Bare Wire Diameter, Inches†			Insulation†		Elongation, Minimum Percent	Scrape, Grams to Fail		Dielectric Springback, Maximum Degrees per Turn	Strength, Minimum Breakdown Volts	AWG Size
	Minimum	Nominal	Maximum	Minimum Increase in Diameter, Inches	Maximum Overall Diameter, Inches		Average	Minimum			
4	0.2023	0.2043	0.2053*	0.0037	0.2098	38	...	....	...	3700	4
5	0.1801	0.1819	0.1828*	0.0036	0.1872	37	...	....	...	3600	5
6	0.1604	0.1620	0.1628*	0.0035	0.1671	37	...	....	...	3500	6
7	0.1429	0.1443	0.1450*	0.0034	0.1491	36	...	....	...	3400	7
8	0.1272	0.1285	0.1292*	0.0033	0.1332	36	...	....	...	3300	8
9	0.1133	0.1144	0.1150*	0.0032	0.1189	36	...	....	...	3200	9
10	0.1009	0.1019	0.1024*	0.0031	0.1061	35	1490	1270	...	6200	10
11	0.0898	0.0907	0.0912*	0.0030	0.0948	35	1490	1270	...	6000	11
12	0.0800	0.0808	0.0812*	0.0029	0.0847	34	1490	1270	...	5800	12
13	0.0713	0.0720	0.0724*	0.0028	0.0757	34	1490	1270	...	5600	13
14	0.0635	0.0641	0.0644*	0.0032	0.0682	33	1490	1270	42	6325	14
15	0.0565	0.0571	0.0574*	0.0030	0.0609	33	1400	1270	46	6175	15
16	0.0503	0.0508	0.0511*	0.0029	0.0545	33	1310	1115	50	6000	16
17	0.0448	0.0453	0.0455*	0.0028	0.0488	32	1230	1045	54	5850	17
18	0.0399	0.0403	0.0405*	0.0026	0.0437	32	1150	980	58	5700	18
19	0.0355	0.0359	0.0361*	0.0025	0.0391	31	1070	910	62	5550	19
20	0.0317	0.0320	0.0322*	0.0023	0.0351	30	1000	850	66	5400	20
21	0.0282	0.0285	0.0286*	0.0022	0.0314	30	940	800	53	5250	21
22	0.0250	0.0253	0.0254*	0.0021	0.0281	29	880	750	58	5125	22
23	0.0224	0.0226	0.0227*	0.0020	0.0253	29	820	700	62	5000	23
24	0.0199	0.0201	0.0202*	0.0019	0.0227	28	770	655	67	4850	24
25	0.0177	0.0179	0.0180*	0.0018	0.0203	28	720	615	72	4725	25
26	0.0157	0.0159	0.0160*	0.0017	0.0182	27	675	575	76	4600	26
27	0.0141	0.0142	0.0143	0.0016	0.0164	27	635	540	50	4500	27
28	0.0125	0.0126	0.0127	0.0016	0.0147	26	595	510	55	4375	28
29	0.0112	0.0113	0.0114	0.0015	0.0133	26	560	480	61	4250	29
30	0.0099	0.0100	0.0101	0.0014	0.0119	25	525	450	66	4150	30
31	0.0088	0.0089	0.0090	0.0013	0.0108	24	...	...	...	3825	31
32	0.0079	0.0080	0.0081	0.0012	0.0098	24	...	...	...	3525	32
33	0.0070	0.0071	0.0072	0.0011	0.0088	23	...	...	...	3250	33
34	0.0062	0.0063	0.0064	0.0010	0.0078	22	...	...	...	2975	34
35	0.0055	0.0056	0.0057	0.0009	0.0070	21	...	...	...	2750	35
36	0.0049	0.0050	0.0051	0.0008	0.0063	20	...	...	...	2525	36
37	0.0044	0.0045	0.0046	0.0008	0.0057	20	...	...	...	2325	37
38	0.0039	0.0040	0.0041	0.0007	0.0051	19	...	...	...	2150	38
39	0.0034	0.0035	0.0036	0.0006	0.0045	18	...	...	...	1975	39
40	0.0030	0.0031	0.0032	0.0006	0.0040	17	...	...	...	1800	40
41	0.0027	0.0028	0.0029	0.0005	0.0036	17	...	...	...	1675	41
42	0.0024	0.0025	0.0026	0.0004	0.0032	16	...	...	...	1525	42
43	0.0021	0.0022	0.0023	0.0004	0.0029	15	...	...	...	1400	43
44	0.0019	0.0020	0.0021	0.0004	0.0027	14	...	...	...	1300	44
	Conductor Resistance at 20°C, Ohms per Foot †, ††						Theoretical Nominal Bare Wire Diameter, Inches †, ††				
	Minimum	Nominal	Maximum								
45	3.080	3.348	3.616	0.00030	0.00230	11	0.00176				45
46	3.870	4.207	4.544	0.00030	0.00210	10	0.00157				46
47	4.868	5.291	5.714	0.00030	0.00190	8	0.00140				47
48	6.205	6.745	7.285	0.00020	0.00170	7	0.00124				48
49	7.744	8.417	9.090	0.00020	0.00150	6	0.00111				49
50	9.734	10.58	11.43	0.00020	0.00140	5	0.00099				50

* This maximum bare wire diameter shall be permitted to be exceeded; see 1.6.7.2.

† For metric equivalents, see Table 1-1.

†† Conductor size tolerance based on resistance; see 1.6.7.3.

Copyright National Electrical Manufacturers Association
Provided by IHS under license with NEMA
No reproduction or networking permitted without license from IHS

Not for Resale

MW 9-C (Triple)
EPOXY, TRIPLE FILM INSULATED ROUND COPPER MAGNET WIRE THERMAL CLASS 130

INSULATING MATERIAL The coating is based on epoxy resins (1.4.2).

THERMAL CLASS 130°C when tested in accordance with Part 1, para. 1.8 and Part 3, para. 3.58.1.

GENERAL REQUIREMENTS See Part 1.

Properties	Test Procedure, See Part 3, Paragraph	Requirements
DIMENSIONS	3.2.1.1	See Table T (MW 9-C)
ADHERENCE AND FLEXIBILITY	3.3.1	No cracks visible in the film coating
ELONGATION	3.4	Not less than value in Table T (MW 9-C)
HEAT SHOCK	3.5	No cracks visible in the film coating after conditioning at 175°C
SPRINGBACK	3.7.1	Not greater than value in Table T (MW 9-C)
DIELECTRIC STRENGTH	3.8.3	Not less than value in Table T (MW 9-C)
CONTINUITY	3.9.2	The number of discontinuities shall not exceed 3
PERIODIC CONFORMANCE TESTS		
THERMOPLASTIC FLOW	3.50	Median not less than 170°C with heavy film insulated 18 or 36 AWG
SOLUBILITY	3.51	A specimen of heavy film insulated 18 AWG immersed in xylene shall not soften sufficiently to expose the bare conductor
DIELECTRIC SRENGTH AT RATED TEMPERATURE	3.52	Heavy film insulated wire shall average not less than 4275 volts for 18 AWG
TRANSFORMER OIL RESISTANCE	3.54	Heavy film insulated wire shall average not less than 5700 volts for 18 AWG
SCRAPE RESISTANCE	3.59	Lowest "grams-to-fail" load for any of the three tests and the average of the three tests shall be not less than the values in Table T (MW 9-C)

Copyright National Electrical Manufacturers Association
Provided by IHS under license with NEMA
No reproduction or networking permitted without license from IHS

Not for Resale

Table T (MW 9-C)
EPOXY, TRIPLE FILM INSULATED ROUND COPPER MAGNET WIRE THERMAL CLASS 130

AWG Size	Bare Wire Diameter, Inches †			Insulation† Minimum Increase in Diameter, Inches	Insulation† Maximum Overall Diameter, Inches	Elongation, Minimum Percent	Scrape, Grams to Fail		Springback, Maximum Degrees per Turn	Dielectric Strength, Minimum Breakdown Volts	AWG Size
	Minimum	Nominal	Maximum				Average	Minimum			
14	0.0635	0.0641	0.0644*	0.0048	0.0700	33	1735	1475	46	8450	14
15	0.0565	0.0571	0.0574*	0.0045	0.0627	33	1620	1375	49	8225	15
16	0.0503	0.0508	0.0511*	0.0043	0.0562	33	1525	1295	53	8000	16
17	0.0448	0.0453	0.0455*	0.0041	0.0504	32	1425	1210	58	7800	17
18	0.0399	0.0403	0.0405*	0.0039	0.0452	32	1335	1135	62	7600	18
19	0.0355	0.0359	0.0361*	0.0037	0.0406	31	1255	1065	66	7400	19
20	0.0317	0.0320	0.0322*	0.0035	0.0364	30	1180	1000	70	7200	20
21	0.0282	0.0285	0.0286*	0.0033	0.0326	30	1115	945	53	7025	21
22	0.0250	0.0253	0.0254*	0.0032	0.0293	29	1045	890	58	6850	22
23	0.0224	0.0226	0.0227*	0.0030	0.0264	29	975	830	64	6675	23
24	0.0199	0.0201	0.0202*	0.0029	0.0238	28	910	770	69	6500	24
25	0.0177	0.0179	0.0180*	0.0027	0.0214	28	850	720	74	6325	25
26	0.0157	0.0159	0.0160*	0.0026	0.0193	27	795	675	80	6150	26
27	0.0141	0.0142	0.0143	0.0024	0.0173	27	735	625	55	6000	27
28	0.0125	0.0126	0.0127	0.0023	0.0156	26	690	585	60	5850	28
29	0.0112	0.0113	0.0114	0.0022	0.0142	26	645	550	65	5700	29
30	0.0099	0.0100	0.0101	0.0021	0.0128	25	605	515	70	5550	30

* This maximum bare wire diameter shall be permitted to be exceeded; see 1.6.7.2.

† For metric equivalents, see Table 1-3.

Copyright National Electrical Manufacturers Association
Provided by IHS under license with NEMA
No reproduction or networking permitted without license from IHS

Not for Resale

MW 14-C (Heavy and Quadruple)
EPOXY, HEAVY AND QUADRUPLE FILM INSULATED RECTANGULAR AND SQUARE COPPER MAGNET WIRE THERMAL CLASS 130

INSULATING MATERIAL The coating is based on epoxy resins (1.4.2).

THERMAL CLASS 130°C when tested in accordance with Part 1, para. 1.8 and Part 3, para. 3.58.1.

GENERAL REQUIREMENTS See Part 1.

Properties	Test Procedure, See Part 3, Paragraph	Requirements
DIMENSIONS	3.2.2.1	Rectangular Wire: a. Dimensions and Radii-see Table 1-13 b. Thickness and width tolerances-see Table 1-14 c. Increase in thickness and width due to film coating see Table TW (MW 14-C) Square Wire: Bare wire dimensions and tolerances, radii, and increase in dimensions due to film coating-see Table SQ (MW 14-C)
ADHERENCE AND FLEXIBILITY	3.3.3	No cracks visible in the film coating after 30 percent elongation
ELONGATION	3.4	Not less than 32 percent for thicknesses less than 0.049 inch (1.25 mm) and greater or 30 percent for thicknesses less than 0.049 inch (1.25 mm)
HEAT SHOCK	3.5	No cracks visible in the film coating after 30 percent elongation followed by conditioning at 150°C
SPRINGBACK	3.7.2	Not greater than 5°
DIELECTRIC STRENGTH	3.8.2	

Film Insulation	Minimum Breakdown Voltage: Any Three of Four Electrodes	Minimum Breakdown Voltage: Fourth Electrode
Heavy	1500	500
Quadruple	2500	900

PERIODIC CONFORMANCE TESTS

THERMOPLASTIC FLOW	3.50	Median not less than 170°C with heavy film insulated 18 AWG
SOLUBILITY	3.51	A specimen immersed in xylene shall not soften sufficiently to expose the bare conductor
DIELECTRIC STRENGTH AT RATED TEMPERATIRE	3.52	Average not less than 4275 volts with heavy film insulated 18 AWG
TRANSFORMER OIL RESISTANCE	3.54	Heavy film insulated wire shall average not less than 5700 volts for 18 AWG

Copyright National Electrical Manufacturers Association
Provided by IHS under license with NEMA
No reproduction or networking permitted without license from IHS

Not for Resale

EPOXY, HEAVY AND QUADRUPLE FILM INSULATED RECTANGULAR AND SQUARE COPPER MAGNET WIRE THERMAL CLASS 130

Table TW (Rectangular) (MW 14-C)
Increase in Thickness and Width Due to Film Coating

	Increase in Width				Increase in Thickness			
	Minimum		Maximum		Minimum		Maximum	
Build	inches	mm	inches	mm	inches	mm	inches	mm
Heavy	0.0025	0.064	0.0045	0.114	0.0030	0.076	0.0050	0.127
Quadruple	0.0040	0.102	0.0060	0.152	0.0050	0.127	0.0070	0.178

* The maximum increase shall be permitted to be exceeded provided the maximum overall dimensions of the coated wire does not exceed the sum of the maximum dimensions of the bare wire plus the maximum increase due to the coating.

Table SQ (Square) (MW 14-C) Inches—Dimensions 1–14 AWG

Square					Heavy		Quadruple	
AWG	Bare Wire Dimensions			Nominal	Minimum	Maximum	Minimum	Maximum
Size	Minimum	Nominal	Maximum	Radii (± 25%)	Increase	Overall	Increase	Overall
1	0.2864	0.2893	0.2922	0.040	0.0030	0.2972	0.0050	0.2992
2	0.2550	0.2576	0.2602	0.040	0.0030	0.2652	0.0050	0.2672
3	0.2271	0.2294	0.2317	0.040	0.0030	0.2367	0.0050	0.2387
4	0.2023	0.2043	0.2063	0.040	0.0030	0.2113	0.0050	0.2133
5	0.1801	0.1819	0.1837	0.040	0.0030	0.1887	0.0050	0.1907
6	0.1604	0.1620	0.1636	0.032	0.0030	0.1686	0.0050	0.1706
7	0.1429	0.1443	0.1457	0.032	0.0030	0.1507	0.0050	0.1527
8	0.1272	0.1285	0.1298	0.032	0.0030	0.1348	0.0050	0.1368
9	0.1133	0.1144	0.1155	0.026	0.0030	0.1205	0.0050	0.1225
10	0.1009	0.1019	0.1029	0.026	0.0030	0.1079	0.0050	0.1099
11	0.0897	0.0907	0.0917	0.020	0.0030	0.0967	0.0050	0.0987
12	0.0798	0.0808	0.0818	0.020	0.0030	0.0868	0.0050	0.0888
13	0.0710	0.0720	0.0730	0.016	0.0030	0.0780	0.0050	0.0800
14	0.0631	0.0641	0.0651	0.016	0.0030	0.0701	0.0050	0.0721

Table SQ (Square) (MW 14-C) mm—Dimensions 1–14 AWG

Square					Heavy		Quadruple	
AWG	Bare Wire Dimensions			Nominal	Minimum	Maximum	Minimum	Maximum
Size	Minimum	Nominal	Maximum	Radii (± 25%)	Increase	Overall	Increase	Overall
1	7.275	7.348	7.422	1.02	0.076	7.549	0.127	7.600
2	6.477	6.543	6.609	1.02	0.076	6.736	0.127	6.787
3	5.768	5.827	5.885	1.02	0.076	6.012	0.127	6.063
4	5.138	5.189	5.240	1.02	0.076	5.367	0.127	5.418
5	4.575	4.620	4.666	1.02	0.076	4.793	0.127	4.844
6	4.074	4.115	4.155	0.81	0.076	4.282	0.127	4.333
7	3.630	3.665	3.701	0.81	0.076	3.828	0.127	3.879
8	3.231	3.264	3.297	0.81	0.076	3.424	0.127	3.475
9	2.878	2.906	2.934	0.66	0.076	3.061	0.127	3.112
10	2.563	2.588	2.614	0.66	0.076	2.741	0.127	2.791
11	2.278	2.304	2.329	0.51	0.076	2.456	0.127	2.507
12	2.027	2.052	2.078	0.51	0.076	2.205	0.127	2.256
13	1.803	1.829	1.854	0.41	0.076	1.981	0.127	2.032
14	1.603	1.628	1.654	0.41	0.076	1.781	0.127	1.831

Copyright National Electrical Manufacturers Association
Provided by IHS under license with NEMA
No reproduction or networking permitted without license from IHS
Not for Resale

MW 15-A (Single)
POLYVINYL ACETAL, SINGLE FILM INSULATED ROUND ALUMINUM MAGNET WIRE THERMAL CLASS 105

INSULATING MATERIALS The coating is based on a blend of polyvinyl acetal and phenolic resins (1.4.2).

THERMAL CLASS 105°C when tested in accordance with Part 1, para. 1.8 and Part 3, para. 3.58.1.

GENERAL REQUIREMENTS See Part 1.

Properties	Test Procedure, See Part 3, Paragraph	Requirements
DIMENSIONS	3.2.1.1	See Table S (MW 15-A)
ADHERENCE AND FLEXIBILITY	3.3.1	No cracks visible in the film coating
ELONGATION	3.4	Not less than value in Table S (MW 15-A)
HEAT SHOCK	3.5	No cracks visible in the film coating after conditioning at 175°C
DIELECTRIC STRENGTH	3.8.3	Not less than value in Table S (MW 15-A)
CONTINUITY	3.9.2	The number of discontinuities shall not exceed 25
COMPLETENESS OF CURE	3.10.1	No swelling or blistering visible in film coating
PERIODIC CONFORMANCE TESTS		
THERMOPLASTIC FLOW	3.50	Median not less than 180°C with heavy film insulated 18 AWG
SOLUBILITY	3.51	A specimen of heavy film insulated 18 AWG immersed in xylene shall not soften sufficiently to expose the bare conductor
DIELECTRIC SRENGTH AT RATED TEMPERATURE	3.52	Average not less than 4275 volts with heavy film insulated 18 AWG
TRANSFORMER OIL RESISTANCE	3.54	Heavy film insulated wire shall average not less than 5700 volts for 18 AWG
SCRAPE RESISTANCE	3.59	Lowest "grams-to-fail" load for any one of the three tests and the average of the three tests shall not be less than the values in Table S (MW 15-A)

Copyright National Electrical Manufacturers Association
Provided by IHS under license with NEMA
No reproduction or networking permitted without license from IHS

Not for Resale

Table S (MW 15-A)
POLYVINYL ACETAL, SINGLE FILM INSULATED ROUND ALUMINUM MAGNET WIRE THERMAL CLASS 105

AWG Size	Bare Wire Diameter, Inches †			Insulation †		Elongation, Minimum Percent	Scrape, Grams to Fail		Dielectric Strength, Minimum Breakdown Volts	AWG Size
	Minimum	Nominal	Maximum	Minimum Increase in Diameter, Inches	Maximum Overall Diameter, Inches		Average	Minimum		
14	0.0635	0.0641	0.0644*	0.0016	0.0666	15	505	430	3525	14
15	0.0565	0.0571	0.0574*	0.0015	0.0594	15	470	400	3425	15
16	0.0503	0.0508	0.0511*	0.0014	0.0531	15	440	375	3325	16
17	0.0448	0.0453	0.0455*	0.0014	0.0475	15	415	350	3250	17
18	0.0399	0.0403	0.0405*	0.0013	0.0424	15	390	330	3175	18
19	0.0355	0.0359	0.0361*	0.0012	0.0379	15	360	305	3075	19
20	0.0317	0.0320	0.0322*	0.0012	0.0339	14	335	285	3000	20
21	0.0282	0.0285	0.0286*	0.0011	0.0303	14	315	265	2925	21
22	0.0250	0.0253	0.0254*	0.0011	0.0270	14	295	250	2850	22
23	0.0224	0.0226	0.0227*	0.0010	0.0243	14	275	235	2775	23
24	0.0199	0.0201	0.0202*	0.0010	0.0217	13	260	220	2700	24

*This maximum bare wire diameter shall be permitted to be exceeded; see 1.6.7.2.
†For metric equivalent, see Table 1-1.

Copyright National Electrical Manufacturers Association
Provided by IHS under license with NEMA
No reproduction or networking permitted without license from IHS

Not for Resale

MW 15-A (Heavy)
POLYVINYL ACETAL, HEAVY FILM INSULATED ROUND ALUMINUM MAGNET WIRE THERMAL CLASS 105

INSULATING MATERIALS The coating is based on a blend of polyvinyl acetal and phenolic resins (1.4.2).

THERMAL CLASS 105°C when tested in accordance with Part 1, para. 1.8 and Part 3, para. 3.58.1.

GENERAL REQUIREMENTS See Part 1.

Properties	Test Procedure, See Part 3, Paragraph	Requirements
DIMENSIONS	3.2.1.1	See Table H (MW 15-A)
ADHERENCE AND FLEXIBILITY	3.3.1	No cracks visible in the film coating
ELONGATION	3.4	Not less than value in Table H (MW 15-A)
HEAT SHOCK	3.5	No cracks visible in the film coating after conditioning at 175°C
DIELECTRIC STRENGTH	3.8.2 3.8.3	4–7 AWG—not less than value in Table H (MW 15-A) 8–24 AWG—not less than value in Table H (MW 15-A)
CONTINUITY	3.9.2	14-24 AWG—The number of discontinuities shall not exceed 10
COMPLETENESS OF CURE	3.10.1	No swelling or blistering visible in film insulation
PERIODIC CONFORMANCE TESTS		
THERMOPLASTIC FLOW	3.50	Median not less than 180°C with heavy insulated coated 18 AWG
SOLUBILITY	3.51	A specimen of heavy film insulated 18 AWG immersed in xylene shall not soften sufficiently to expose the bare conductor
DIELECTRIC STRENGTH AT RATED TEMPERATURE	3.52	Average not less than 4275 volts with heavy film insulated 18 AWG
TRANSFORMER OIL RESISTANCE	3.54	Heavy film insulated wire shall average not less than 5700 volts for 18 AWG
SCRAPE RESISTANCE	3.59	Lowest "grams-to-fail" load for any one of the three tests and the average of the three tests shall not be less than the values in Table H (MW 15-A)

Copyright National Electrical Manufacturers Association
Provided by IHS under license with NEMA
No reproduction or networking permitted without license from IHS

Not for Resale

Table H (MW 15-A)
POLYVINYL ACETAL, HEAVY FILM INSULATED ROUND ALUMINUM MAGNET WIRE THERMAL CLASS 105

AWG Size	Bare Wire Diameter, Inches †			Insulation †		Elongation, Minimum	Scrape, Grams to Fail		Dielectric Strength, Minimum Breakdown	AWG Size
	Minimum	Nominal	Maximum	Minimum Increase in Diameter, Inches	Maximum Overall Diameter, Inches	Percent	Average	Minimum	Volts	
4	0.2023	0.2043	0.2053*	0.0037	0.2098	15	...	...	3700	4
5	0.1801	0.1819	0.1828*	0.0036	0.1872	15	...	...	3600	5
6	0.1604	0.1620	0.1628*	0.0035	0.1671	15	...	...	3500	6
7	0.1429	0.1443	0.1450*	0.0034	0.1491	15	...	...	3400	7
8	0.1272	0.1285	0.1292*	0.0033	0.1332	15	...	...	6600	8
9	0.1133	0.1144	0.1150*	0.0032	0.1189	15	...	...	6400	9
10	0.1009	0.1019	0.1024*	0.0031	0.1061	15	895	760	6200	10
11	0.0898	0.0907	0.0912*	0.0030	0.0948	15	895	760	6000	11
12	0.0800	0.0808	0.0812*	0.0029	0.0847	15	895	760	5800	12
13	0.0713	0.0720	0.0724*	0.0028	0.0757	15	895	760	5600	13
14	0.0635	0.0641	0.0644*	0.0032	0.0682	15	895	760	6325	14
15	0.0565	0.0571	0.0574*	0.0030	0.0609	15	840	715	6175	15
16	0.0503	0.0508	0.0511*	0.0029	0.0545	15	785	670	6000	16
17	0.0448	0.0453	0.0455*	0.0028	0.0488	15	740	625	5850	17
18	0.0399	0.0403	0.0405*	0.0026	0.0437	15	690	590	5700	18
19	0.0355	0.0359	0.0361*	0.0025	0.0391	15	640	545	5550	19
20	0.0317	0.0320	0.0322*	0.0023	0.0351	15	600	510	5400	20
21	0.0282	0.0285	0.0286*	0.0022	0.0314	14	565	480	5250	21
22	0.0250	0.0253	0.0254*	0.0021	0.0281	14	530	450	5125	22
23	0.0224	0.0226	0.0227*	0.0020	0.0253	14	490	420	5000	23
24	0.0199	0.0201	0.0202*	0.0019	0.0227	13	460	395	4850	24

*This maximum bare wire diameter shall be permitted to be exceeded; see 1.6.7.2.
†For metric equivalent, see Table 1-2.

Copyright National Electrical Manufacturers Association
Provided by IHS under license with NEMA
No reproduction or networking permitted without license from IHS

Not for Resale

MW 15-C (Single)
POLYVINYL ACETAL, SINGLE FILM INSULATED ROUND COPPER MAGNET WIRE
THERMAL CLASS 105

INSULATING MATERIALS The coating is based on a blend of polyvinyl acetal and phenolic resins (1.4.2).

THERMAL CLASS 105°C when tested in accordance with Part 1, para. 1.8 and Part 3, para. 3.58.1.

GENERAL REQUIREMENTS See Part 1.

Properties	Test Procedure, See Part 3, Paragraph	Requirements
DIMENSIONS	3.2.1.1	See Table S (MW 15-C)
ADHERENCE AND FLEXIBILITY	3.3.1	No cracks visible in the film coating
ELONGATION	3.4	Not less than value in Table S (MW 15-C)
HEAT SHOCK	3.5	No cracks visible in the film coating after conditioning at 175°C
SPRINGBACK	3.7.1	Not greater than the value in Table S (MW 15-C)
DIELECTRIC STRENGTH	3.8.3	Not less than value in Table S (MW 15-C)
CONTINUITY	3.9.2 3.9.3	14-44 AWG—The number of discontinuities shall not exceed 15 45-56 AWG—The number of discontinuities shall not exceed 25
COMPLETENESS OF CURE	3.10.1	No swelling or blistering visible in film insulation
PERIODIC CONFORMANCE TESTS		
THERMOPLASTIC FLOW	3.50	Median not less than 180°C with heavy film insulated 18 AWG
SOLUBILITY	3.51	A specimen of heavy film insulated 18 AWG immersed in xylene shall not soften sufficiently to expose the bare conductor
DIELECTRIC STRENGTH AT RATED TEMPERATURE	3.52	Heavy film insulated wire shall average not less than 4275 volts for 18 AWG or 1900 volts for 36 AWG
TRANSFORMER OIL RESISTANCE	3.54	Heavy film insulated wire shall average not less than 5700 volts for 18 AWG
SCRAPE RESISTANCE	3.59	Lowest "grams-to-fail" load for any one of the three tests and the average of the three tests shall not be less than the values in Table S (MW 15-C)

Copyright National Electrical Manufacturers Association
Provided by IHS under license with NEMA
No reproduction or networking permitted without license from IHS

Not for Resale

Table S (MW 15-C)
POLYVINYL ACETAL, SINGLE FILM INSULATED ROUND COPPER MAGNET WIRE
THERMAL CLASS 105

AWG Size	Bare Wire Diameter, Inches †			Insulation †		Elongation, Minimum Percent	Scrape, Grams to Fail		Springback, Maximum Degrees per Turn	Dielectric Strength, Minimum Breakdown Volts	AWG Size
	Minimum	Nominal	Maximum	Minimum Increase in Diameter, Inches	Maximum Overall Diameter, Inches		Average	Minimum			
14	0.0635	0.0641	0.0644*	0.0016	0.0666	33	840	715	42	3525	14
15	0.0565	0.0571	0.0574*	0.0015	0.0594	33	780	665	46	3425	15
16	0.0503	0.0508	0.0511*	0.0014	0.0531	33	735	625	50	3325	16
17	0.0448	0.0453	0.0455*	0.0014	0.0475	32	690	585	54	3250	17
18	0.0399	0.0403	0.0405*	0.0013	0.0424	32	645	550	58	3175	18
19	0.0355	0.0359	0.0361*	0.0012	0.0379	31	600	510	62	3075	19
20	0.0317	0.0320	0.0322*	0.0012	0.0339	30	560	475	66	3000	20
21	0.0282	0.0285	0.0286*	0.0011	0.0303	30	525	445	53	2925	21
22	0.0250	0.0253	0.0254*	0.0011	0.0270	29	490	415	58	2850	22
23	0.0224	0.0226	0.0227*	0.0010	0.0243	29	460	390	62	2775	23
24	0.0199	0.0201	0.0202*	0.0010	0.0217	28	430	365	67	2700	24
25	0.0177	0.0179	0.0180*	0.0009	0.0194	28	400	340	72	2625	25
26	0.0157	0.0159	0.0160*	0.0009	0.0173	27	380	325	76	2550	26
27	0.0141	0.0142	0.0143	0.0008	0.0156	27	355	300	50	2500	27
28	0.0125	0.0126	0.0127	0.0008	0.0140	26	335	285	55	2425	28
29	0.0112	0.0113	0.0114	0.0007	0.0126	26	310	265	61	2375	29
30	0.0099	0.0100	0.0101	0.0007	0.0112	25	295	250	66	2300	30
31	0.0088	0.0089	0.0090	0.0006	0.0100	24	...	...	...	2075	31
32	0.0079	0.0080	0.0081	0.0006	0.0091	24	...	...	...	1850	32
33	0.0070	0.0071	0.0072	0.0005	0.0081	23	...	...	...	1675	33
34	0.0062	0.0063	0.0064	0.0005	0.0072	22	...	...	...	1500	34
35	0.0055	0.0056	0.0057	0.0004	0.0064	21	...	...	...	1325	35
36	0.0049	0.0050	0.0051	0.0004	0.0058	20	...	...	...	1200	36
37	0.0044	0.0045	0.0046	0.0003	0.0052	20	...	...	...	1075	37
38	0.0039	0.0040	0.0041	0.0003	0.0047	19	...	...	...	950	38
39	0.0034	0.0035	0.0036	0.0002	0.0041	18	...	...	...	850	39
40	0.0030	0.0031	0.0032	0.0002	0.0037	17	...	...	...	775	40
41	0.0027	0.0028	0.0029	0.0002	0.0033	17	...	...	...	700	41
42	0.0024	0.0025	0.0026	0.0002	0.0030	16	...	...	...	625	42
43	0.0021	0.0022	0.0023	0.0002	0.0026	15	...	...	...	550	43
44	0.0019	0.0020	0.0021	0.0001	0.0024	14	...	...	...	500	44
	Conductor Resistance at 20°C, Ohms per Foot †, ††						Theoretical Nominal Bare Wire Diameter, Inches †, ††				
45	3.080	3.348	3.616	0.00010	0.00205	11	0.00176				45
46	3.870	4.207	4.544	0.00010	0.00185	10	0.00157				46
47	4.868	5.291	5.714	0.00010	0.00170	8	0.00140				47
48	6.205	6.745	7.285	0.00010	0.00150	7	0.00124				48
49	7.744	8.417	9.090	0.00010	0.00130	6	0.00111				49
50	9.734	10.58	11.43	0.00010	0.00120	5	0.00099				50
51	12.32	13.39	14.46	0.00010	0.00110	...	0.00088				51
52	15.69	17.05	18.41	0.00010	0.00100	...	0.00078				52
53	19.48	21.17	22.86	0.00005	0.00085	...	0.00070				53
54	24.82	26.98	29.14	0.00005	0.00075	...	0.00062				54
55	31.54	34.28	37.02	0.00005	0.00070	...	0.00055				55
56	39.73	43.19	46.65	0.00005	0.00065	...	0.00049				56

* This maximum bare wire diameter shall be permitted to be exceeded; see 1.6.7.2.

† For metric equivalent, see Table 1-1.

†† Conductor size tolerance based on resistance; see 1.6.7.3.

Copyright National Electrical Manufacturers Association
Provided by IHS under license with NEMA
No reproduction or networking permitted without license from IHS

Not for Resale

MW 15-C (Heavy)
POLYVINYL ACETAL, HEAVY FILM INSULATED ROUND COPPER MAGNET WIRE
THERMAL CLASS 105

INSULATING MATERIALS The coating is based on a blend of polyvinyl acetal and phenolic resins (1.4.2).

THERMAL CLASS 105°C when tested in accordance with Part 1, para. 1.8 and Part 3, para. 3.58.1.

GENERAL REQUIREMENTS See Part 1.

Properties	Test Procedure, see Part 3, Paragraph	Requirements
DIMENSIONS	3.2.1.1	See Table H (MW 15-C)
ADHERENCE AND FLEXIBILITY	3.3.1	No cracks visible in the film coating
ELONGATION	3.4	Not less than value in Table H (MW 15-C)
HEAT SHOCK	3.5	No cracks visible in the film coating after conditioning at 175°C
SPRINGBACK	3.7.1 3.7.2	14-30 AWG—Not greater than value in Table H (MW 15-C) Larger than 14 AWG—Not greater than 5°
DIELECTRIC STRENGTH	3.8.2 3.8.3	4–9 AWG—Not less than value in Table H (MW 15-C) 10–44 AWG—Not less than value in Table H (MW 15-C)
CONTINUITY	3.9.2 3.9.3	14-44 AWG—The number of discontinuities shall not exceed 5 45-50 AWG—The number of discontinuities shall not exceed 10
COMPLETENESS OF CURE	3.10.1	No swelling or blistering visible in film coating
PERIODIC CONFORMANCE TESTS		
THERMOPLASTIC FLOW	3.50	Median not less than 180°C with heavy film insulated 18 or 36 AWG
SOLUBILITY	3.51	A specimen of heavy film insulated 18 or 36 AWG immersed in xylene shall not soften sufficiently to expose the bare conductor
DIELECTRIC STRENGTH AT RATED TEMPERATURE	3.52	Heavy film insulated wire shall average not less than 4275 volts for 18 AWG or 1900 volts for 36 AWG
TRANSFORMER OIL RESISTANCE	3.54	Heavy film insulated wire shall average not less than 5700 volts for 18 AWG
SCRAPE RESISTANCE	3.59	Lowest "grams-to-fail" load for any one of the three tests and the average of the three tests shall not be less than the values in Table H (MW 15-C)

Copyright National Electrical Manufacturers Association
Provided by IHS under license with NEMA
No reproduction or networking permitted without license from IHS

Not for Resale

Table H (MW 15-C)
POLYVINYL ACETAL, HEAVY FILM INSULATED ROUND COPPER MAGNET WIRE THERMAL CLASS 105

AWG Size	Bare Wire Diameter, Inches †			Insulation †		Elongation, Minimum	Scrape, Grams to Fail		Springback, Maximum	Dielectric Strength, Minimum	AWG Size
	Minimum	Nominal	Maximum	Minimum Increase in Diameter, Inches	Maximum Overall Diameter, Inches	Percent	Average	Minimum	Degrees per Turn	Breakdown Volts	
4	0.2023	0.2043	0.2053*	0.0037	0.2098	38	...	...	..	3700	4
5	0.1801	0.1819	0.1828*	0.0036	0.1872	37	...	...	..	3600	5
6	0.1604	0.1620	0.1628*	0.0035	0.1671	37	...	...	..	3500	6
7	0.1429	0.1443	0.1450*	0.0034	0.1491	36	...	...	..	3400	7
8	0.1272	0.1285	0.1292*	0.0033	0.1332	36	...	...	..	3300	8
9	0.1133	0.1144	0.1150*	0.0032	0.1189	36	...	...	..	3200	9
10	0.1009	0.1019	0.1024*	0.0031	0.1061	35	1490	1270	..	6200	10
11	0.0898	0.0907	0.0912*	0.0030	0.0948	35	1490	1270	..	6000	11
12	0.0800	0.0808	0.0812*	0.0029	0.0847	34	1490	1270	..	5800	12
13	0.0713	0.0720	0.0724*	0.0028	0.0757	34	1490	1270	..	5600	13
14	0.0635	0.0641	0.0644*	0.0032	0.0682	33	1490	1270	42	6325	14
15	0.0565	0.0571	0.0574*	0.0030	0.0609	33	1490	1190	46	6175	15
16	0.0503	0.0508	0.0511*	0.0029	0.0545	33	1310	1115	50	6000	16
17	0.0448	0.0453	0.0455*	0.0028	0.0488	32	1230	1045	54	5850	17
18	0.0399	0.0403	0.0405*	0.0026	0.0437	32	1150	980	58	5700	18
19	0.0355	0.0359	0.0361*	0.0025	0.0391	31	1070	910	62	5550	19
20	0.0317	0.0320	0.0322*	0.0023	0.0351	30	1000	850	66	5400	20
21	0.0282	0.0285	0.0286*	0.0022	0.0314	30	940	800	53	5250	21
22	0.0250	0.0253	0.0254*	0.0021	0.0281	29	880	750	58	5125	22
23	0.0224	0.0226	0.0227*	0.0020	0.0253	29	820	700	62	5000	23
24	0.0199	0.0201	0.0202*	0.0019	0.0227	28	770	655	67	4850	24
25	0.0177	0.0179	0.0180*	0.0018	0.0203	28	720	615	72	4725	25
26	0.0157	0.0159	0.0160*	0.0017	0.0182	27	675	575	76	4600	26
27	0.0141	0.0142	0.0143	0.0016	0.0164	27	635	540	50	4500	27
28	0.0125	0.0126	0.0127	0.0016	0.0147	26	595	510	55	4375	28
29	0.0112	0.0113	0.0114	0.0015	0.0133	26	560	480	61	4250	29
30	0.0099	0.0100	0.0101	0.0014	0.0119	25	525	450	66	4150	30
31	0.0088	0.0089	0.0090	0.0013	0.0108	24	...	...	..	3825	31
32	0.0079	0.0080	0.0081	0.0012	0.0098	24	...	...	..	3525	32
33	0.0070	0.0071	0.0072	0.0011	0.0088	23	...	...	..	3250	33
34	0.0062	0.0063	0.0064	0.0010	0.0078	22	...	...	..	2975	34
35	0.0055	0.0056	0.0057	0.0009	0.0070	21	...	...	..	2750	35
36	0.0049	0.0050	0.0051	0.0008	0.0063	20	...	...	..	2525	36
37	0.0044	0.0045	0.0046	0.0008	0.0057	20	...	...	..	2325	37
38	0.0039	0.0040	0.0041	0.0007	0.0051	19	...	...	..	2150	38
39	0.0034	0.0035	0.0036	0.0006	0.0045	18	...	...	..	1975	39
40	0.0030	0.0031	0.0032	0.0006	0.0040	17	...	...	..	1800	40
41	0.0027	0.0028	0.0029	0.0005	0.0036	17	...	...	..	1675	41
42	0.0024	0.0025	0.0026	0.0004	0.0032	16	...	...	..	1525	42
43	0.0021	0.0022	0.0023	0.0004	0.0029	15	...	...	..	1400	43
44	0.0019	0.0020	0.0021	0.0004	0.0027	14	...	...	..	1300	44
	Conductor Resistance at 20°C, Ohms per Foot †, ††						Theoretical Nominal Bare Wire Diameter, Inches †, ††				
	Minimum	Nominal	Maximum								
45	3.080	3.348	3.616	0.00030	0.00230	11	0.00176				45
46	3.870	4.207	4.544	0.00030	0.00210	10	0.00157				46
47	4.868	5.291	5.714	0.00030	0.00190	8	0.00140				47
48	6.205	6.745	7.285	0.00020	0.00170	7	0.00124				48
49	7.744	8.417	9.090	0.00020	0.00150	6	0.00111				49
50	9.734	10.58	11.43	0.00020	0.00140	5	0.00099				50

* This maximum bare wire diameter shall be permitted to be exceeded; see 1.6.7.2.

† For metric equivalent, see Table 1-2.

†† Conductor size tolerance based on resistance; see 1.6.7.3.

Copyright National Electrical Manufacturers Association
Provided by IHS under license with NEMA
No reproduction or networking permitted without license from IHS

Not for Resale

STD.NEMA MW 1000-ENGL 1997 ■ 6470247 0510270 T04 ■

MW 15-C (Triple)
POLYVINYL ACETAL, TRIPLE FILM INSULATED ROUND COPPER MAGNET WIRE THERMAL CLASS 105

INSULATING MATERIALS The coating is based on a blend of polyvinyl acetal and phenolic resins (1.4.2).

THERMAL CLASS 105°C when tested in accordance with Part 1, para. 1.8 and Part 3, para. 3.58.1.

GENERAL REQUIREMENTS See Part 1.

Properties	Test Procedure, See Part 3, Paragraph	Requirements
DIMENSIONS	3.2.1.1	See Table T (MW 15-C)
ADHERENCE AND FLEXIBILITY	3.3.1	No cracks visible in the film coating
ELONGATION	3.4	Not less than value in Table T (MW 15-C)
HEAT SHOCK	3.5	No cracks visible in the film coating after conditioning at 175°C
SPRINGBACK	3.7.1	Not greater than value in Table T (MW 15-C)
DIELECTRIC STRENGTH	3.8.3	Not less than value in Table T (MW 15-C)
CONTINUITY	3.9.2	The number of discontinuities shall not exceed 3
COMPLETENESS OF CURE	3.10.1	No swelling or blistering visible in film coating
PERIODIC CONFORMANCE TESTS		
THERMOPLASTIC FLOW	3.50	Median not less than 180°C with heavy film insulated 18 AWG
SOLUBILITY	3.51	A specimen of heavy film insulated 18 AWG immersed in xylene shall not soften sufficiently to expose the bare conductor
DIELECTRIC STRENGTH AT RATED TEMPERATURE	3.52	Heavy film insulated wire shall average not less than 4275 volts for 18 AWG
TRANSFORMER OIL RESISTANCE	3.54	Heavy film insulated wire shall average not less than 5700 volts for 18 AWG
SCRAPE RESISTANCE	3.59	Lowest "grams-to-fail" load for any one of the three tests and the average of the three tests shall not be less than the values in Table T (MW 15-C)

Copyright National Electrical Manufacturers Association
Provided by IHS under license with NEMA
No reproduction or networking permitted without license from IHS

Not for Resale

Table T (MW 15-C)
POLYVINYL ACETAL, TRIPLE FILM INSULATED ROUND COPPER MAGNET WIRE
THERMAL CLASS 105

AWG Size	Bare Wire Diameter, inches †			Insulation †		Elongation, Minimum	Scrape, Grams to Fail		Springback, Maximum	Dielectric Strength, Minimum	AWG Size
	Minimum	Nominal	Maximum	Minimum Increase in Diameter, Inches	Maximum Overall Diameter, Inches	Percent	Average	Minimum	Degrees per Turn	Breakdown Volts	
14	0.0635	0.0641	0.0644*	0.0048	0.0700	33	1735	1475	46	8450	14
15	0.0565	0.0571	0.0574*	0.0045	0.0627	33	1620	1375	49	8225	15
16	0.0503	0.0508	0.0511*	0.0043	0.0562	33	1525	1295	53	8000	16
17	0.0448	0.0453	0.0455*	0.0041	0.0504	32	1425	1210	58	7800	17
18	0.0399	0.0403	0.0405*	0.0039	0.0452	32	1335	1135	62	7600	18
19	0.0355	0.0359	0.0361*	0.0037	0.0406	31	1255	1065	66	7400	19
20	0.0317	0.0320	0.0322*	0.0035	0.0364	30	1180	1000	70	7200	20
21	0.0282	0.0285	0.0286*	0.0033	0.0326	30	1115	945	53	7025	21
22	0.0250	0.0253	0.0254*	0.0032	0.0293	29	1045	890	58	6850	22
23	0.0224	0.0226	0.0227*	0.0030	0.0264	29	975	830	64	6675	23
24	0.0199	0.0201	0.0202*	0.0029	0.0238	28	910	770	69	6500	24
25	0.0177	0.0179	0.0180*	0.0027	0.0214	28	850	720	74	6325	25
26	0.0157	0.0159	0.0160	0.0026	0.0193	27	795	675	80	6150	26
27	0.0141	0.0142	0.0143	0.0024	0.0173	27	735	625	55	6000	27
28	0.0125	0.0126	0.0127	0.0023	0.0156	26	690	585	60	5850	28
29	0.0112	0.0113	0.0114	0.0022	0.0142	26	645	550	65	5700	29
30	0.0099	0.0100	0.0101	0.0021	0.0128	25	605	515	70	5550	30

* This maximum bare wire diameter shall be permitted to be exceeded; see 1.6.7.2.
† For metric equivalent, see Table 1-3.

Copyright National Electrical Manufacturers Association
Provided by IHS under license with NEMA
No reproduction or networking permitted without license from IHS

Not for Resale

MW 16-C (Single)
POLYIMIDE, SINGLE FILM INSULATED ROUND COPPER MAGNET WIRE THERMAL CLASS 240

INSULATING MATERIAL The coating is based on aromatic polyimide resins (1.4.2).

THERMAL CLASS 240°C. The temperature index must meet or exceed 240°C when tested in accordance with Part 1, para. 1.8 and Part 3, para. 3.58.1.

GENERAL REQUIREMENTS See Part 1.

Properties	Test Procedure, See Part 3, Paragraph	Requirements
DIMENSIONS	3.2.1.1	See Table S (MW 16-C)
ADHERENCE AND FLEXIBILITY	3.3.1	No cracks visible in the film coating
ELONGATION	3.4	Not less than value in Table S (MW 16-C)
HEAT SHOCK	3.5	No cracks visible in the film coating after conditioning at 280°C
SPRINGBACK	3.7.1	Not greater than value in Table S (MW 16-C)
DIELECTRIC STRENGTH	3.8.3	Not less than value in Table S (MW 16-C)
CONTINUITY	3.9.2 3.9.3	14-44 AWG—The number of discontinuities shall not exceed 15 45-50 AWG—The number of discontinuities shall not exceed 25
COMPLETENESS OF CURE	3.10.2	Dissipation factor not greater than 0.60 percent
PERIODIC CONFORMANCE TESTS		
THERMOPLASTIC FLOW	3.50	Median not less than 450°C with heavy film insulated 18 or 36 AWG
SOLUBILITY	3.51	Two specimens of heavy film insulated 18 or 36 AWG immersed in xylene and 50/50 xylene/butyl Cellosolve shall not soften sufficiently to expose the bare conductor
DIELECTRIC STRENGTH AT RATED TEMPERATURE	3.52	Heavy film insulated wire shall average not less than 4275 volts for 18 AWG or 1900 volts for 36 AWG
SCRAPE RESISTANCE	3.59	Lowest "grams-to-fail" load for any one of the three tests and the average of the three tests shall be not less than the values in Table S (MW 16-C)

Copyright National Electrical Manufacturers Association
Provided by IHS under license with NEMA
No reproduction or networking permitted without license from IHS

Not for Resale

Table S (MW 16-C)
POLYIMIDE, SINGLE FILM INSULATED ROUND COPPER MAGNET WIRE THERMAL CLASS 240

AWG Size	Bare Wire Diameter, Inches †			Insulation †		Elongation, Minimum Percent	Scrape, Grams to Fail		Springback, Maximum Degrees per Turn	Dielectric Strength, Minimum Breakdown Volts	AWG Size
	Minimum	Nominal	Maximum	Minimum Increase in Diameter, Inches	Maximum Overall Diameter, Inches		Average	Minimum			
14	0.0635	0.0641	0.0644*	0.0016	0.0666	33	545	465	42	3525	14
15	0.0565	0.0571	0.0574*	0.0015	0.0594	33	510	430	46	3425	15
16	0.0503	0.0508	0.0511*	0.0014	0.0531	33	475	405	50	3325	16
17	0.0448	0.0453	0.0455*	0.0014	0.0475	32	445	380	54	3250	17
18	0.0399	0.0403	0.0405*	0.0013	0.0424	32	420	355	58	3175	18
19	0.0355	0.0359	0.0361*	0.0012	0.0379	31	390	335	62	3075	19
20	0.0317	0.0320	0.0322*	0.0012	0.0339	30	370	315	66	3000	20
21	0.0282	0.0285	0.0286*	0.0011	0.0303	30	345	295	53	2925	21
22	0.0250	0.0253	0.0254*	0.0011	0.0270	29	325	275	58	2850	22
23	0.0224	0.0226	0.0227*	0.0010	0.0243	29	300	255	62	2775	23
24	0.0199	0.0201	0.0202*	0.0010	0.0217	28	285	245	67	2700	24
25	0.0177	0.0179	0.0180*	0.0009	0.0194	28	265	225	72	2625	25
26	0.0157	0.0159	0.0160*	0.0009	0.0173	27	245	210	76	2550	26
27	0.0141	0.0142	0.0143	0.0008	0.0156	27	230	200	50	2500	27
28	0.0125	0.0126	0.0127	0.0008	0.0140	26	215	185	55	2425	28
29	0.0112	0.0113	0.0114	0.0007	0.0126	26	200	170	61	2375	29
30	0.0099	0.0100	0.0101	0.0007	0.0112	25	190	160	66	2300	30
31	0.0088	0.0089	0.0090	0.0006	0.0100	24	...	...	...	2075	31
32	0.0079	0.0080	0.0081	0.0006	0.0091	24	...	...	...	1850	32
33	0.0070	0.0071	0.0072	0.0005	0.0081	23	...	...	...	1675	33
34	0.0062	0.0063	0.0064	0.0005	0.0072	22	...	...	...	1500	34
35	0.0055	0.0056	0.0057	0.0004	0.0064	21	...	...	...	1325	35
36	0.0049	0.0050	0.0051	0.0004	0.0058	20	...	...	...	1200	36
37	0.0044	0.0045	0.0046	0.0003	0.0052	20	...	...	...	1075	37
38	0.0039	0.0040	0.0041	0.0003	0.0047	19	...	...	...	950	38
39	0.0034	0.0035	0.0036	0.0002	0.0041	18	...	...	...	850	39
40	0.0030	0.0031	0.0032	0.0002	0.0037	17	...	...	...	775	40
41	0.0027	0.0028	0.0029	0.0002	0.0033	17	...	...	...	700	41
42	0.0024	0.0025	0.0026	0.0002	0.0030	16	...	...	...	625	42
43	0.0021	0.0022	0.0023	0.0002	0.0026	15	...	...	...	550	43
44	0.0019	0.0020	0.0021	0.0001	0.0024	14	...	...	...	500	44

	Conductor Resistance at 20°C, Ohms per Foot †, ††						Theoretical Nominal Bare Wire Diameter, Inches †, ††	
	Minimum	Nominal	Maximum					
45	3.080	3.348	3.616	0.00010	0.00205	11	0.00176	45
46	3.870	4.207	4.544	0.00010	0.00185	10	0.00157	46
47	4.868	5.291	5.714	0.00010	0.00170	8	0.00140	47
48	6.205	6.745	7.285	0.00010	0.00150	7	0.00124	48
49	7.744	8.417	9.090	0.00010	0.00130	6	0.00111	49
50	9.734	10.58	11.43	0.00010	0.00120	5	0.00099	50

*This maximum bare wire diameter shall be permitted to be exceeded; see 1.6.7.2.

† For metric equivalent, see Table 1-1.

†† Conductor size tolerance based on resistance; see 1.6.7.3.

Copyright National Electrical Manufacturers Association
Provided by IHS under license with NEMA
No reproduction or networking permitted without license from IHS

Not for Resale

6470247 0514966 519

MW 16-C (Heavy)
POLYIMIDE, HEAVY FILM INSULATED ROUND COPPER MAGNET WIRE
THERMAL CLASS 240

INSULATING MATERIALS The coating is based on aromatic polyimide resins (1.4.2).

THERMAL CLASS 240°C. The temperature index must meet or exceed 240°C when tested in accordance with Part 1, para. 1.8 and Part 3, para. 3.58.1.

GENERAL REQUIREMENTS See Part 1, and note below.

Properties	Test Procedure, See Part 3, Paragraph	Requirements
DIMENSIONS	3.2.1.1	See Table H (MW 16-C)
ADHERENCE AND FLEXIBILITY	3.3.1	No cracks visible in the film coating
ELONGATION	3.4	Not less than value in Table H (MW 16-C)
HEAT SHOCK	3.5	No cracks visible in the film coating after conditioning at 280°C
SPRINGBACK	3.7.1 3.7.2	14-30 AWG—Not greater than value in Table H (MW 16-C) Larger than 14 AWG—Not greater than 5°
DIELECTRIC STRENGTH	3.8.2 3.8.3	4–9 AWG, not less than value in Table H (MW 16-C) 10–44 AWG, not less than value in Table H (MW 16-C)
CONTINUITY	3.9.2 3.9.3	14-44 AWG—The number of discontinuities shall not exceed 5 45-50 AWG—The number of discontinuities shall not exceed 10
COMPLETENESS OF CURE	3.10.2	Dissipation factor not greater than 0.60 percent
PERIODIC CONFORMANCE TESTS		
THERMOPLASTIC FLOW	3.50	Median not less than 450°C with heavy film insulated 18 or 36 AWG
SOLUBILITY	3.51.1	Two specimens of heavy film insulated 18 or 36 AWG immersed in xylene and 50/50 xylene/butyl Cellosolve shall not soften sufficiently to expose the bare conductor
DIELECTRIC STRENGTH AT RATED TEMPERATURE	3.52	Heavy film insulated wire shall average not less than 4275 volts for 18 AWG or 1900 volts for 36 AWG
REFRIGERANT R22 EXTRACTION	3.55	Not greater than 0.25 percent of the weight of the film insulation
RETAINED DIELECTRIC AFTER R22 CONDITIONING	3.56	Average not less than 5700 volts with heavy film insulated 18 AWG
SCRAPE RESISTANCE	3.59	Lowest "grams-to-fail" load for any one of the three tests and the average of the three tests shall not be less than the values in Table H (MW 16-C)

NOTE—This specification is equivalent to MW 71-C (Heavy).

Copyright National Electrical Manufacturers Association
Provided by IHS under license with NEMA
No reproduction or networking permitted without license from IHS

Not for Resale

Table H (MW 16-C)
POLYIMIDE, HEAVY FILM INSULATED ROUND COPPER MAGNET WIRE THERMAL CLASS 240

AWG Size	Bare Wire Diameter, Inches †			Insulation †		Elongatio	Scrape, Grams to Fail		Springbac	Dielectric Strength,	AWG Size
	Minimum	Nominal	Maximum	Minimum Increase Diameter, Inches	Maximum Overall Diameter, Inches	Minimum Percent	Average	Minimum	Maximum Degrees per Turn	Minimum Breakdow Volts	
4	0.2023	0.2043	0.2053*	0.0037	0.2098	38	...	...	..	3700	4
5	0.1801	0.1819	0.1828*	0.0036	0.1872	37	...	...	..	3600	5
6	0.1604	0.1620	0.1628*	0.0035	0.1671	37	...	...	..	3500	6
7	0.1429	0.1443	0.1450*	0.0034	0.1491	36	...	...	..	3400	7
8	0.1272	0.1285	0.1292*	0.0033	0.1332	36	...	...	..	3300	8
9	0.1133	0.1144	0.1150*	0.0032	0.1189	36	...	...	..	3200	9
10	0.1009	0.1019	0.1024*	0.0031	0.1061	35	1090	925	..	6200	10
11	0.0898	0.0907	0.0912*	0.0030	0.0948	35	1090	925	..	6000	11
12	0.0800	0.0808	0.0812*	0.0029	0.0847	34	1090	925	..	5800	12
13	0.0713	0.0720	0.0724*	0.0028	0.0757	34	1090	925	..	5600	13
14	0.0635	0.0641	0.0644*	0.0032	0.0682	33	1090	925	42	6325	14
15	0.0565	0.0571	0.0574*	0.0030	0.0609	33	1015	865	46	6175	15
16	0.0503	0.0508	0.0511*	0.0029	0.0545	33	955	810	50	6000	16
17	0.0448	0.0453	0.0455*	0.0028	0.0488	32	890	755	54	5850	17
18	0.0399	0.0403	0.0405*	0.0026	0.0437	32	835	710	58	5700	18
19	0.0355	0.0359	0.0361*	0.0025	0.0391	31	785	665	62	5550	19
20	0.0317	0.0320	0.0322*	0.0023	0.0351	30	740	630	66	5400	20
21	0.0282	0.0285	0.0286*	0.0022	0.0314	30	695	595	53	5250	21
22	0.0250	0.0253	0.0254*	0.0021	0.0281	29	650	550	58	5125	22
23	0.0224	0.0226	0.0227*	0.0020	0.0253	29	605	515	62	5000	23
24	0.0199	0.0201	0.0202*	0.0019	0.0227	28	565	485	67	4850	24
25	0.0177	0.0179	0.0180*	0.0018	0.0203	28	530	450	72	4725	25
26	0.0157	0.0159	0.0160*	0.0017	0.0182	27	495	425	76	4600	26
27	0.0141	0.0142	0.0143	0.0016	0.0164	27	460	395	50	4500	27
28	0.0125	0.0126	0.0127	0.0016	0.0147	26	435	370	55	4375	28
29	0.0112	0.0113	0.0114	0.0015	0.0133	26	405	340	61	4250	29
30	0.0099	0.0100	0.0101	0.0014	0.0119	25	380	325	66	4150	30
31	0.0088	0.0089	0.0090	0.0013	0.0108	24	...	...	...	3825	31
32	0.0079	0.0080	0.0081	0.0012	0.0098	24	...	...	...	3525	32
33	0.0070	0.0071	0.0072	0.0011	0.0088	23	...	...	...	3250	33
34	0.0062	0.0063	0.0064	0.0010	0.0078	22	...	...	...	2975	34
35	0.0055	0.0056	0.0057	0.0009	0.0070	21	...	...	...	2750	35
36	0.0049	0.0050	0.0051	0.0008	0.0063	20	...	...	...	2525	36
37	0.0044	0.0045	0.0046	0.0008	0.0057	20	...	...	...	2325	37
38	0.0039	0.0040	0.0041	0.0007	0.0051	19	...	...	...	2150	38
39	0.0034	0.0035	0.0036	0.0006	0.0045	18	...	...	...	1975	39
40	0.0030	0.0031	0.0032	0.0006	0.0040	17	...	...	...	1800	40
41	0.0027	0.0028	0.0029	0.0005	0.0036	17	...	...	...	1675	41
42	0.0024	0.0025	0.0026	0.0004	0.0032	16	...	...	...	1525	42
43	0.0021	0.0022	0.0023	0.0004	0.0029	15	...	...	...	1400	43
44	0.0019	0.0020	0.0021	0.0004	0.0027	14	...	...	...	1300	44

	Conductor Resistance at 20°C. Ohms per Foot †, ††						Theoretical Nominal Bare Wire Diameter, Inches †, ††	
	Minimum	Nominal	Maximum					
45	3.080	3.348	3.616	0.00030	0.00230	11	0.00176	45
46	3.870	4.207	4.544	0.00030	0.00210	10	0.00157	46
47	4.868	5.291	5.714	0.00030	0.00190	8	0.00140	47
48	6.205	6.745	7.285	0.00020	0.00170	7	0.00124	48
49	7.744	8.417	9.090	0.00020	0.00150	6	0.00111	49
50	9.734	10.58	11.43	0.00020	0.00140	5	0.00099	50

* This maximum bare wire diameter shall be permitted to be exceeded; see 1.6.7.2.
† For metric equivalent, see Table 1-2.
†† Conductor size tolerance based on resistance; see 1.6.7.3.

Copyright National Electrical Manufacturers Association
Provided by IHS under license with NEMA
No reproduction or networking permitted without license from IHS

Not for Resale

MW 16-C (Triple)
POLYIMIDE, TRIPLE FILM INSULATED ROUND COPPER MAGNET WIRE THERMAL CLASS 240

INSULATING MATERIALS The coating is based on aromatic polyimide resins (1.4.2).

THERMAL CLASS 240°C. The temperature index must meet or exceed 240°C when tested in accordance with Part 1, para. 1.8 and Part 3, para. 3.58.1.

GENERAL REQUIREMENTS See Part 1.

Properties	Test Procedure, See Part 3, Paragraph	Requirements
DIMENSIONS	3.2.1.1	See Table T (MW 16-C)
ADHERENCE AND FLEXIBILITY	3.3.1	No cracks visible in the film coating
ELONGATION	3.4	Not less than the value in Table T (MW 16-C)
HEAT SHOCK	3.5	No cracks in the film coating after conditioning at 280°C
SPRINGBACK	3.7.1	Not greater than the value in Table T (MW 16-C)
DIELECTRIC STRENGTH	3.8.3	Not less than the value in Table T (MW 16-C)
CONTINUITY	3.9.2	The number of discontinuities shall not exceed 3
COMPLETENESS OF CURE	3.10.2	Dissipation factor not greater than 0.60 percent
PERIODIC CONFORMANCE TESTS		
THERMOPLASTIC FLOW	3.50	Median of not less than 450°C with heavy film insulated 18 or 36 AWG
SOLUBILITY	3.51	Two specimens of heavy film insulated 18 or 36 AWG immersed in xylene and 50/50 xylene butyl Cellosolve shall not soften sufficiently to expose bare conductor
DIELECTRIC STRENGTH AT RATED TEMPERATURE	3.52	Heavy film insulated wire shall average not less than 4275 volts for 18 AWG or 19 volts for 36 AWG
SCRAPE RESISTANCE	3.59	Lowest "grams to fail" load for any one of the three tests and the average of the three tests shall not be less than the values in Table T (MW 16-C)

Copyright National Electrical Manufacturers Association
Provided by IHS under license with NEMA
No reproduction or networking permitted without license from IHS

Not for Resale

Table T (MW 16-C)
POLYIMIDE, TRIPLE FILM INSULATED ROUND COPPER MAGNET WIRE
THERMAL CLASS 240

AWG Size	Bare Wire Diameter, Inches †			Insulation†		Elongation, Minimum Percent	Scrape, Grams to Fail		Springback, Maximum Degrees per Turn	Dielectric Strength, Minimum Breakdown Volts	AWG Size
	Minimum	Nominal	Maximum	Minimum Increase in Diameter Inches	Maximum Overall Diameter Inches		Average	Minimum			
14	0.0635	0.0641	0.0644*	0.0048	0.0700	33	1360	1150	46	8450	14
15	0.0565	0.0571	0.0574*	0.0045	0.0627	33	1270	1080	49	8225	15
16	0.0503	0.0508	0.0511*	0.0043	0.0562	33	1190	1010	53	8000	16
17	0.0448	0.0453	0.0455*	0.0041	0.0504	32	1115	945	58	7800	17
18	0.0399	0.0403	0.0405*	0.0039	0.0452	32	1045	890	62	7600	18
19	0.0355	0.0359	0.0361*	0.0037	0.0406	31	980	830	66	7400	19
20	0.0317	0.0320	0.0322*	0.0035	0.0364	30	920	785	70	7200	20
21	0.0282	0.0285	0.0286*	0.0033	0.0326	30	865	735	53	7025	21
22	0.0250	0.0253	0.0254*	0.0032	0.0293	29	810	690	58	6850	22
23	0.0224	0.0226	0.0227*	0.0030	0.0264	29	755	645	64	6675	23
24	0.0199	0.0201	0.0202*	0.0029	0.0238	28	710	605	69	6500	24
25	0.0177	0.0179	0.0180*	0.0027	0.0214	28	665	565	74	6325	25
26	0.0157	0.0159	0.0160*	0.0026	0.0193	27	620	530	80	6150	26
27	0.0141	0.0142	0.0143	0.0024	0.0173	27	575	490	55	6000	27
28	0.0125	0.0126	0.0127	0.0023	0.0156	26	540	460	60	5850	28
29	0.0112	0.0113	0.0114	0.0022	0.0142	26	505	425	65	5700	29
30	0.0099	0.0100	0.0101	0.0021	0.0128	25	470	395	70	5550	30
31	0.0088	0.0089	0.0090	0.0017	0.0114	24	...	...	...	4600	31
32	0.0079	0.0080	0.0081	0.0016	0.0103	24	...	...	...	4275	32
33	0.0070	0.0071	0.0072	0.0014	0.0092	23	...	...	...	3950	33
34	0.0062	0.0063	0.0064	0.0013	0.0082	22	...	...	...	3675	34
35	0.0055	0.0056	0.0057	0.0012	0.0074	21	...	...	...	3425	35
36	0.0049	0.0050	0.0051	0.0011	0.0067	20	...	...	...	3175	36
37	0.0044	0.0045	0.0046	0.0010	0.0060	20	...	...	...	2950	37
38	0.0039	0.0040	0.0041	0.0009	0.0054	19	...	...	...	2725	38
39	0.0034	0.0035	0.0036	0.0008	0.0048	18	...	...	...	2525	39
40	0.0030	0.0031	0.0032	0.0008	0.0043	17	...	...	...	2350	40
41	0.0027	0.0028	0.0029	0.0007	0.0039	17	...	...	...	2175	41
42	0.0024	0.0025	0.0026	0.0007	0.0035	16	...	...	...	2025	42
43	0.0021	0.0022	0.0023	0.0006	0.0032	15	...	...	...	1875	43
44	0.0019	0.0020	0.0021	0.0006	0.0029	14	...	...	...	1750	44

* This bare wire diameter shall be permitted to be exceeded; see 1.6.7.2.
† For metric equivalents, see Table 1-3.

Copyright National Electrical Manufacturers Association
Provided by IHS under license with NEMA
No reproduction or networking permitted without license from IHS

Not for Resale

6470247 0514970 T4T

MW 16-C (Quadruple)
POLYIMIDE, QUADRUPLE FILM INSULATED ROUND COPPER MAGNET WIRE
THERMAL CLASS 240

INSULATING MATERIALS The coating is based on aromatic polyimide resins (1.4.2).

THERMAL CLASS 240°C. The temperature index must meet or exceed 240°C when tested in accordance with Part 1, para. 1.8 and Part 3, para. 3.58.1.

GENERAL REQUIREMENTS See Part 1.

Properties	Test Procedure, See Part 3, Paragraph	Requirements
DIMENSIONS	3.2.1.1	See Table Q (MW 16-C)
ADHERENCE AND FLEXIBILITY	3.3.1	No cracks visible in the film coating
ELONGATION	3.4	Not less than value in Table Q (MW 16-C)
HEAT SHOCK	3.5	No cracks visible in the film coating after conditioning at 280°C
SPRINGBACK	3.7.1	Not greater than value in Table Q (MW 16-C)
DIELECTRIC SRENGTH	3.8.3	Not less than value in Table Q (MW 16-C)
CONTINUITY	3.9.2	The number of discontinuities shall not exceed 3
COMPLETENESS OF CURE	3.10.2	Dissipation factor not greater than 0.60 percent
PERIODIC CONFORMANCE TESTS		
THERMOPLASTIC FLOW	3.50	Median not less than 450°C with heavy film insulated 18 AWG
SOLUBILITY	3.51	Two specimens of heavy film insulated 18 AWG immersed in xylene and 50/50 xylene/butyl Cellosolve shall not soften sufficiently to expose the bare conductor
DIELECTRIC SRENGTH AT RATED TEMPERATURE	3.52	Heavy film insulated wire shall average not less than 4275 volts for 18 AWG
SCRAPE RESISTANCE	3.59	Lowest "grams-to-fail" load for any one of the three tests and the average of the three tests shall not be less than the values in Table Q (MW 16-C)

Copyright National Electrical Manufacturers Association
Provided by IHS under license with NEMA
No reproduction or networking permitted without license from IHS

Not for Resale

Table Q (MW 16-C)
POLYIMIDE, QUADRUPLE FILM INSULATED ROUND COPPER MAGNET WIRE
THERMAL CLASS 240

AWG Size	Bare Wire Diameter Inches			Insulation		Elongation, Minimum Percent	Scrape, Grams to Fail		Springback, Maximum Degrees per Turn	Dielectric Strength, Minimum Breakdown Volts	AWG Size
	Minimum	Normal	Maximum	Minimum Increase in Diameter, Inches	Maximum Overall Diameter, Inches		Average	Minimum			
14	0.0635	0.0641	0.0644*	.0049	.0709	33	1390	1185	46	8680	14
15	0.0565	0.0571	0.0574*	.0048	.0638	33	1350	1150	49	8640	15
16	0.0503	0.0508	0.0511*	.0046	.0572	33	1275	1090	53	8395	16
17	0.0448	0.0453	0.0455*	.0045	.0515	32	1225	1045	58	8325	17
18	0.0399	0.0403	0.0405*	.0044	.0464	32	1115	955	62	8250	18
19	0.0355	0.0359	0.0361*	.0042	.0418	31	1060	905	66	7980	19
20	0.0317	0.0320	0.0322*	.0040	.0376	30	990	845	70	7700	20
21	0.0282	0.0285	0.0286*	.0039	.0339	30	945	810	53	7605	21
22	0.0250	0.0253	0.0254*	.0037	.0305	29	870	745	58	7310	22
23	0.0224	0.0226	0.0227*	.0036	.0277	29	805	690	64	7200	23
24	0.0199	0.0201	0.0202*	.0035	.0250	28	745	635	69	7090	24
25	0.0177	0.0179	0.0180*	.0034	.0226	28	710	605	74	6970	25
26	0.0157	0.0159	0.0160*	.0032	.0204	27	655	570	80	6640	26
27	0.0141	0.0142	0.0143	.0030	.0184	27	635	545	55	6300	27
28	0.0125	0.0126	0.0127	.0029	.0165	26	585	500	60	6160	28
29	0.0112	0.0113	0.0114	.0028	.0151	26	550	470	65	6020	29
30	0.0099	0.0100	0.0101	.0027	.0136	25	500	425	70	5870	30

*This maximum bare wire diameter shall be permitted to be exceeded; see 1.6.7.2.

Copyright National Electrical Manufacturers Association
Provided by IHS under license with NEMA
No reproduction or networking permitted without license from IHS

Not for Resale

MW 17-C (Single)
POLYVINYL ACETAL OVERCOATED WITH POLYAMIDE, SINGLE FILM INSULATED ROUND COPPER MAGNET WIRE THERMAL CLASS 105

INSULATING MATERIAL The conductor shall be coated with a dual film. The underlying coating is based on a blend of polyvinyl acetal and phenolic resins (1.4.2). The superimposed coating is based on polyamide resins (1.4.2).

THERMAL CLASS 105°C when tested in accordance with Part 1, para 1.8 and Part 3, para. 3.58.1.

GENERAL REQUIREMENTS See Part 1.

Properties	Test Procedure, See Part 3, Paragraph	Requirements
DIMENSIONS	3.2.1.1	See Table S (MW 17-C)
ADHERENCE AND FLEXIBILITY	3.3.1	No cracks visible in the film coating
ELONGATION	3.4	Not less than value in Table S (MW 17-C)
HEAT SHOCK	3.5	No cracks visible in the film coating after conditioning at 175°C
SPRINGBACK	3.7.1	Not greater than value in Table S (MW 17-C)
DIELECTRIC STRENGTH	3.8.3	Not less than value in Table S (MW 17-C)
CONTINUITY	3.9.2	The number of discontinuities shall not exceed 15
PERIODIC CONFORMANCE TESTS		
THERMOPLASTIC FLOW	3.50	Median not less than 180°C with heavy film insulated 18 or 36 AWG
SOLUBILITY	3.51	A specimen of heavy film insulated 18 or 36 AWG immersed in xylene shall not soften sufficiently to expose the bare conductor
DIELECTRIC STRENGTH AT RATED TEMPERATURE	3.52	Heavy film insulated wire shall average not less than 3825 volts for 18 AWG or 1725 volts for 36 AWG
SCRAPE RESISTANCE	3.59	Lowest "grams-to-fail" load for any one of the three tests and the average of the three tests shall be not less than the values in Table S (MW 17-C)

Copyright National Electrical Manufacturers Association
Provided by IHS under license with NEMA
No reproduction or networking permitted without license from IHS

Not for Resale

Table S (MW 17-C)
POLYVINYL ACETAL OVERCOATED WITH POLYAMIDE, SINGLE FILM INSULATED ROUND COPPER MAGNET WIRE THERMAL CLASS 105

AWG Size	Bare Wire Diameter, Inches †			Insulation †		Elongation, Minimum Percent	Scrape, Grams to Fail		Springback, Maximum Degrees per Turn	Dielectric Strength, Minimum Breakdown Volts	AWG Size
	Minimum	Nominal	Maximum	Minimum Increase in Diameter, Inches	Maximum Overall Diameter, Inches		Average	Minimum			
14	0.0635	0.0641	0.0644*	0.0016	0.0666	33	840	715	42	3175	14
15	0.0565	0.0571	0.0574*	0.0015	0.0594	33	780	665	46	3075	15
16	0.0503	0.0508	0.0511*	0.0014	0.0531	33	735	625	50	3000	16
17	0.0448	0.0453	0.0455*	0.0014	0.0475	32	690	585	54	2925	17
18	0.0399	0.0403	0.0405*	0.0013	0.0424	32	645	550	58	2850	18
19	0.0355	0.0359	0.0361*	0.0012	0.0379	31	600	510	62	2775	19
20	0.0317	0.0320	0.0322*	0.0012	0.0339	30	560	475	66	2700	20
21	0.0282	0.0285	0.0286*	0.0011	0.0303	30	525	445	53	2625	21
22	0.0250	0.0253	0.0254*	0.0011	0.0270	29	490	415	58	2575	22
23	0.0224	0.0226	0.0227*	0.0010	0.0243	29	460	390	62	2500	23
24	0.0199	0.0201	0.0202*	0.0010	0.0217	28	430	365	67	2425	24
25	0.0177	0.0179	0.0180*	0.0009	0.0194	28	400	340	72	2375	25
26	0.0157	0.0159	0.0160*	0.0009	0.0173	27	380	325	76	2300	26
27	0.0141	0.0142	0.0143	0.0008	0.0156	27	355	300	50	2250	27
28	0.0125	0.0126	0.0127	0.0008	0.0140	26	335	285	55	2175	28
29	0.0112	0.0113	0.0114	0.0007	0.0126	26	310	265	61	2150	29
30	0.0099	0.0100	0.0101	0.0007	0.0112	25	295	250	66	2075	30
31	0.0088	0.0089	0.0090	0.0006	0.0100	24	...	...	...	1875	31
32	0.0079	0.0080	0.0081	0.0006	0.0091	24	...	...	...	1675	32
33	0.0070	0.0071	0.0072	0.0005	0.0081	23	...	...	...	1500	33
34	0.0062	0.0063	0.0064	0.0005	0.0072	22	...	...	...	1350	34
35	0.0055	0.0056	0.0057	0.0004	0.0064	21	...	...	...	1200	35
36	0.0049	0.0050	0.0051	0.0004	0.0058	20	...	...	...	1075	36
37	0.0044	0.0045	0.0046	0.0003	0.0052	20	...	...	...	975	37
38	0.0039	0.0040	0.0041	0.0003	0.0047	19	...	...	...	850	38
39	0.0034	0.0035	0.0036	0.0002	0.0041	18	...	...	...	775	39
40	0.0030	0.0031	0.0032	0.0002	0.0037	17	...	...	...	700	40
41	0.0027	0.0028	0.0029	0.0002	0.0033	17	...	...	...	625	41
42	0.0024	0.0025	0.0026	0.0002	0.0030	16	...	...	...	575	42
43	0.0021	0.0022	0.0023	0.0002	0.0026	15	...	...	...	500	43
44	0.0019	0.0020	0.0021	0.0001	0.0024	14	...	...	...	450	44

*This maximum bare wire diameter shall be permitted to be exceeded; see 1.6.7.2.
†For metric equivalent, see Table 1-1.

Copyright National Electrical Manufacturers Association
Provided by IHS under license with NEMA
No reproduction or networking permitted without license from IHS

Not for Resale

MW 17-C (Heavy)
POLYVINYL ACETAL OVERCOATED WITH POLYAMIDE, HEAVY FILM INSULATED ROUND COPPER MAGNET WIRE THERMAL CLASS 105

INSULATING MATERIALS The conductor shall be coated with a dual film. The underlying coating is based on a blend of polyvinyl acetal and phenolic resins (1.4.2). The superimposed coating is based on polyamide resins (1.4.2).

THERMAL CLASS 105°C when tested in accordance with Part 1, para. 1.8 and Part 3, para. 3.58.1.

GENERAL REQUIREMENTS See Part 1.

Properties	Test Procedure, See Part 3, Paragraph	Requirements
DIMENSIONS	3.2.1.1	See Table H (MW 17-C)
ADHERENCE AND FLEXIBILITY	3.3.1	No cracks visible in the film coating
ELONGATION	3.4	Not less than value in Table H (MW 17-C)
HEAT SHOCK	3.5	No cracks visible in the film coating after conditioning at 175°C
SPRINGBACK	3.7.1	Not greater than value in Table H (MW 17-C)
DIELECTRIC STRENGTH	3.8.3	Not less than value in Table H (MW 17-C)
CONTINUITY	3.9.2	The number of discontinuities shall not exceed 5
PERIODIC CONFORMANCE TESTS		
THERMOPLASTIC FLOW	3.50	Median not less than 180°C with heavy film insulated 18 or 36 AWG
SOLUBILITY	3.51	A specimen of heavy film insulated 18 or 36 AWG immersed in xylene shall not soften sufficiently to expose the bare conductor
DIELECTRIC STRENGTH AT RATED TEMPERATURE	3.52	Heavy film insulated wire shall average not less than 3825 volts for 18 AWG or 1725 volts for 36 AWG
SCRAPE RESISTANCE	3.59	Lowest "grams-to-fail" load for any one of the three tests and the average of the three tests shall not be less than the values in Table H (MW 17-C)

Copyright National Electrical Manufacturers Association
Provided by IHS under license with NEMA
No reproduction or networking permitted without license from IHS

Not for Resale

Table H (MW 17-C)
POLYVINYL ACETAL OVERCOATED WITH POLYAMIDE, HEAVY FILM INSULATED ROUND COPPER MAGNET WIRE THERMAL CLASS 105

AWG Size	Bare Wire Diameter, Inches †			Insulation †		Elongation, Minimum Percent	Scrape, Grams to Fail		Springback, Maximum Degrees per Turn	Dielectric Strength, Minimum Breakdown, Volts	AWG Size
	Minimum	Nominal	Maximum	Minimum Increase in Diameter, Inches	Maximum Overall Diameter, Inches		Average	Minimum			
14	0.0635	0.0641	0.0644*	0.0032	0.0682	33	1490	1270	42	5700	14
15	0.0565	0.0571	0.0574*	0.0030	0.0609	33	1490	1190	46	5550	15
16	0.0503	0.0508	0.0511*	0.0029	0.0545	33	1310	1115	50	5400	16
17	0.0448	0.0453	0.0455*	0.0028	0.0488	32	1230	1045	54	5275	17
18	0.0399	0.0403	0.0405*	0.0026	0.0437	32	1150	980	58	5125	18
19	0.0355	0.0359	0.0361*	0.0025	0.0391	31	1070	910	62	5000	19
20	0.0317	0.0320	0.0322*	0.0023	0.0351	30	1000	850	66	4850	20
21	0.0282	0.0285	0.0286*	0.0022	0.0314	30	940	800	53	4725	21
22	0.0250	0.0253	0.0254*	0.0021	0.0281	29	880	750	58	4625	22
23	0.0224	0.0226	0.0227*	0.0020	0.0253	29	820	700	62	4500	23
24	0.0199	0.0201	0.0202*	0.0019	0.0227	28	770	655	67	4375	24
25	0.0177	0.0179	0.0180*	0.0018	0.0203	28	720	615	72	4250	25
26	0.0157	0.0159	0.0160*	0.0017	0.0182	27	675	575	76	4150	26
27	0.0141	0.0142	0.0143	0.0016	0.0164	27	635	540	50	4050	27
28	0.0125	0.0126	0.0127	0.0016	0.0147	26	595	510	55	3950	28
29	0.0112	0.0113	0.0114	0.0015	0.0133	26	560	480	61	3825	29
30	0.0099	0.0100	0.0101	0.0014	0.0119	25	525	450	66	3725	30
31	0.0088	0.0089	0.0090	0.0013	0.0108	24	...	...	...	3450	31
32	0.0079	0.0080	0.0081	0.0012	0.0098	24	...	...	...	3175	32
33	0.0070	0.0071	0.0072	0.0011	0.0088	23	...	...	...	2925	33
34	0.0062	0.0063	0.0064	0.0010	0.0078	22	...	...	...	2675	34
35	0.0055	0.0056	0.0057	0.0009	0.0070	21	...	...	...	2475	35
36	0.0049	0.0050	0.0051	0.0008	0.0063	20	...	...	...	2275	36
37	0.0044	0.0045	0.0046	0.0008	0.0057	20	...	...	...	2100	37
38	0.0039	0.0040	0.0041	0.0007	0.0051	19	...	...	...	1925	38
39	0.0034	0.0035	0.0036	0.0006	0.0045	18	...	...	...	1775	39
40	0.0030	0.0031	0.0032	0.0006	0.0040	17	...	...	...	1625	40
41	0.0027	0.0028	0.0029	0.0005	0.0036	17	...	...	...	1500	41
42	0.0024	0.0025	0.0026	0.0004	0.0032	16	...	...	...	1375	42
43	0.0021	0.0022	0.0023	0.0004	0.0029	15	...	...	...	1250	43
44	0.0019	0.0020	0.0021	0.0004	0.0027	14	...	...	...	1175	44

*This maximum bare wire diameter shall be permitted to be exceeded; see 1.6.7.2.
†For metric equivalent, see Table 1-2.

Copyright National Electrical Manufacturers Association
Provided by IHS under license with NEMA
No reproduction or networking permitted without license from IHS

Not for Resale

MW 18-A (Heavy and Quadruple)
POLYVINYL ACETAL, HEAVY AND QUADRUPLE FILM INSULATED RECTANGULAR AND SQUARE ALUMINUM MAGNET WIRE THERMAL CLASS 105

INSULATING MATERIALS The coating is based on a blend of polyvinyl acetal and phenolic resins (1.4.2).

THERMAL CLASS 105°C when tested in accordance with Part 1, para. 1.8 and Part 3, para. 3.58.1.

GENERAL REQUIREMENTS See Part 1.

Properties	Test Procedure, See Part 3, Paragraph	Requirements
DIMENSIONS	3.2.2.1	Rectangular Wire: a. Dimensions and radii-see Table 1-13 b. Thickness and width tolerances-see Table 1-14 c. Increase in thickness and width due to film coating—see Table TW(MW 18-A) Square Wire: Bare wire dimensions and tolerances, radii, and increase in dimensions due to film coating-see Table SQ (MW 18-A)
ADHERENCE AND FLEXIBILITY	3.3.3	No cracks visible in the film coating after 15 percent elongation
ELONGATION	3.4	Not less than 15 percent
HEAT SHOCK	3.5	No cracks visible in the film coating after 10 percent elongation followed by conditioning at 150°C ± 3°C
DIELECTRIC STRENGTH	3.8.2	Minimum Breakdown Voltage Film Coating / Any Three of Four Electrodes / Fourth Electrode Heavy: 1500 / 500 Quadruple: 2500 / 900
COMPLETENESS OF CURE	3.10.1	No swelling or blistering visible in the film coating
PERIODIC CONFORMANCE TESTS		
THERMOPLASTIC FLOW	3.50	Median not less than 180°C with heavy film insulated 18 AWG
SOLUBILITY	3.51	A specimen immersed in xylene shall not soften sufficiently to expose the bare conductor
DIELECTRIC STRENGTH AT RATED TEMPERATURE	3.52	Average not less than 4275 volts with heavy film insulated 18 AWG
TRANSFORMER OIL RESISTANCE	3.54	Heavy film insulated wire shall average not less than 5700 volts for 18 AWG

Copyright National Electrical Manufacturers Association
Provided by IHS under license with NEMA
No reproduction or networking permitted without license from IHS

Not for Resale

POLYVINYL ACETAL, HEAVY AND QUADRUPLE FILM INSULATED RECTANGULAR AND SQUARE ALUMINUM MAGNET WIRE THERMAL CLASS 105

Table TW (Rectangular) (MW 18-A) Increase in Thickness and Width Due to Film Coating

	Increase in Width				Increase in Thickness			
	Minimum		Maximum*		Minimum		Maximum*	
Build	inches	mm	inches	mm	inches	mm	inches	mm
Heavy	0.0025	0.064	0.0045	0.114	0.0030	0.076	0.0050	0.127
Quadruple	0.0040	0.102	0.0060	0.152	0.0050	0.127	0.0070	0.178

* The maximum increase shall be permitted to be exceeded provided the maximum overall dimensions of the coated wire does not exceed the sum of the maximum dimensions of the bare wire plus the maximum increase due to the coating.

Table SQ (Square) (MW 18-A) Inches—Dimensions 1–14 AWG

Square					Heavy		Quadruple	
AWG	Bare Wire Dimensions			Nominal	Minimum	Maximum	Minimum	Maximum
Size	Minimum	Nominal	Maximum	Radii (± 25%)	Increase	Overall	Increase	Overall
1	0.2864	0.2893	0.2922	0.040	0.0030	0.2972	0.0050	0.2992
2	0.2550	0.2576	0.2602	0.040	0.0030	0.2652	0.0050	0.2672
3	0.2271	0.2294	0.2317	0.040	0.0030	0.2367	0.0050	0.2387
4	0.2023	0.2043	0.2063	0.040	0.0030	0.2113	0.0050	0.2133
5	0.1801	0.1819	0.1837	0.040	0.0030	0.1887	0.0050	0.1907
6	0.1604	0.1620	0.1636	0.032	0.0030	0.1686	0.0050	0.1706
7	0.1429	0.1443	0.1457	0.032	0.0030	0.1507	0.0050	0.1527
8	0.1272	0.1285	0.1298	0.032	0.0030	0.1348	0.0050	0.1368
9	0.1133	0.1144	0.1155	0.026	0.0030	0.1205	0.0050	0.1225
10	0.1009	0.1019	0.1029	0.026	0.0030	0.1079	0.0050	0.1099
11	0.0897	0.0907	0.0917	0.020	0.0030	0.0967	0.0050	0.0987
12	0.0798	0.0808	0.0818	0.020	0.0030	0.0868	0.0050	0.0888
13	0.0710	0.0720	0.0730	0.016	0.0030	0.0780	0.0050	0.0800
14	0.0631	0.0641	0.0651	0.016	0.0030	0.0701	0.0050	0.0721

Table SQ (Square) (MW 18-A) mm—Dimensions 1–14 AWG

Square					Heavy		Quadruple	
AWG	Bare Wire Dimensions			Nominal	Minimum	Maximum	Minimum	Maximum
Size	Minimum	Nominal	Maximum	Radii (± 25%)	Increase	Overall	Increase	Overall
1	7.275	7.348	7.422	1.02	0.076	7.549	0.127	7.600
2	6.477	6.543	6.609	1.02	0.076	6.736	0.127	6.787
3	5.768	5.827	5.885	1.02	0.076	6.012	0.127	6.063
4	5.138	5.189	5.240	1.02	0.076	5.367	0.127	5.418
5	4.575	4.620	4.666	1.02	0.076	4.793	0.127	4.844
6	4.074	4.115	4.155	0.81	0.076	4.282	0.127	4.333
7	3.630	3.665	3.701	0.81	0.076	3.828	0.127	3.879
8	3.231	3.264	3.297	0.81	0.076	3.424	0.127	3.475
9	2.878	2.906	2.934	0.66	0.076	3.061	0.127	3.112
10	2.563	2.588	2.614	0.66	0.076	2.741	0.127	2.791
11	2.278	2.304	2.329	0.51	0.076	2.456	0.127	2.507
12	2.027	2.052	2.078	0.51	0.076	2.205	0.127	2.256
13	1.803	1.829	1.854	0.41	0.076	1.981	0.127	2.032
14	1.603	1.628	1.654	0.41	0.076	1.781	0.127	1.831

Copyright National Electrical Manufacturers Association
Provided by IHS under license with NEMA
No reproduction or networking permitted without license from IHS

Not for Resale

MW 18-C (Heavy and Quadruple)
POLYVINYL ACETAL, HEAVY AND QUADRUPLE FILM INSULATED RECTANGULAR AND SQUARE COPPER MAGNET WIRE THERMAL CLASS 105

INSULATING MATERIAL The coating is based on a blend of polyvinyl acetal and phenolic resins (1.4.2).

THERMAL CLASS 105°C when tested in accordance with Part 1, para. 1.8 and Part 3, para. 3.58.1

GENERAL REQUIREMENTS See Part 1.

Properties	Test Procedure, See Part 3, Paragraph	Requirements
DIMENSIONS	3.2.2.1	Rectangular Wire: a. Dimensions and Radii—see Table 1-13 b. Thickness and width tolerances—see Table 1-14 c. Increase in thickness and width due to film coating—see Table TW (MW 18-C) Square Wire: Bare wire dimensions and tolerances, radii, and increase in dimensions due to film coating-see Table SQ (MW 18-C)
ADHERENCE AND FLEXIBILITY	3.3.3	No cracks visible in the film coating
ELONGATION	3.4	Not less than 32 percent for thicknesses less than 0.049 inch (1.25 mm) and greater or 30 percent for thicknesses less than 0.049 inch (1.25 mm)
HEAT SHOCK	3.5	No cracks visible in the film coating after 30 percent elongation followed by conditioning at 150°C ± 3°C
SPRINGBACK	3.7.2	Not greater than 5°
DIELECTRIC STRENGTH	3.8.2	

	Minimum Breakdown Voltage	
Film Coating	Any Three of Four Electrodes	Fourth Electrode
Heavy	1500	500
Quadruple	2500	900

COMPLETENESS OF CURE	3.10.1	No swelling or blistering visible in the film coating

PERIODIC CONFORMANCE TESTS

THERMOPLASTIC FLOW	3.50	Median not less than 180°C with heavy film insulated 18 AWG
SOLUBILITY	3.51	A specimen immersed in xylene shall not soften sufficiently to expose the bare conductor
DIELECTRIC STRENGTH AT RATED TEMPERATURE	3.52	Average not less than 4275 volts with heavy film insulated 18 AWG
TRANSFORMER OIL RESISTANCE	3.54	Heavy film insulated wire shall average not less than 5700 volts for 18 AWG

Copyright National Electrical Manufacturers Association
Provided by IHS under license with NEMA
No reproduction or networking permitted without license from IHS

Not for Resale

POLYVINYL ACETAL, HEAVY AND QUADRUPLE FILM INSULATED RECTANGULAR AND SQUARE COPPER MAGNET WIRE THERMAL CLASS 105

Table TW (Rectangular) (MW 18-C) Increase in Thickness and Width Due to Film Coating

	Increase in Width				Increase in Thickness			
	Minimum		Maximum*		Minimum		Maximum*	
Build	inches	mm	inches	mm	inches	mm	inches	mm
Heavy	0.0025	0.064	0.0045	0.114	0.0030	0.076	0.0050	0.127
Quadruple	0.0040	0.102	0.0060	0.152	0.0050	0.127	0.0070	0.178

* The maximum increase shall be permitted to be exceeded provided the maximum overall dimensions of the coated wire does not exceed the sum of the maximum dimensions of the bare wire plus the maximum increase due to the coating.

Table SQ (Square) (MW 18-C) Inches—Dimensions 1–14 AWG

Square AWG	Bare Wire Dimensions			Nominal	Heavy		Quadruple	
					Minimum	Maximum	Minimum	Maximum
Size	Minimum	Nominal	Maximum	Radii (± 25%)	Increase	Overall	Increase	Overall
1	0.2864	0.2893	0.2922	0.040	0.0030	0.2972	0.0050	0.2992
2	0.2550	0.2576	0.2602	0.040	0.0030	0.2652	0.0050	0.2672
3	0.2271	0.2294	0.2317	0.040	0.0030	0.2367	0.0050	0.2387
4	0.2023	0.2043	0.2063	0.040	0.0030	0.2113	0.0050	0.2133
5	0.1801	0.1819	0.1837	0.040	0.0030	0.1887	0.0050	0.1907
6	0.1604	0.1620	0.1636	0.032	0.0030	0.1686	0.0050	0.1706
7	0.1429	0.1443	0.1457	0.032	0.0030	0.1507	0.0050	0.1527
8	0.1272	0.1285	0.1298	0.032	0.0030	0.1348	0.0050	0.1368
9	0.1133	0.1144	0.1155	0.026	0.0030	0.1205	0.0050	0.1225
10	0.1009	0.1019	0.1029	0.026	0.0030	0.1079	0.0050	0.1099
11	0.0897	0.0907	0.0917	0.020	0.0030	0.0967	0.0050	0.0987
12	0.0798	0.0808	0.0818	0.020	0.0030	0.0868	0.0050	0.0888
13	0.0710	0.0720	0.0730	0.016	0.0030	0.0780	0.0050	0.0800
14	0.0631	0.0641	0.0651	0.016	0.0030	0.0701	0.0050	0.0721

Table SQ (Square) (MW 18-C) mm—Dimensions 1–14 AWG

Sqare AWG	Bare Wire Dimensions			Nominal	Heavy		Quadruple	
					Minimum	Maximum	Minimum	Maximum
Size	Minimum	Nominal	Maximum	Radii (± 25%)	Increase	Overall	Increase	Overall
1	7.275	7.348	7.422	1.02	0.076	7.549	0.127	7.600
2	6.477	6.543	6.609	1.02	0.076	6.736	0.127	6.787
3	5.768	5.827	5.885	1.02	0.076	6.012	0.127	6.063
4	5.138	5.189	5.240	1.02	0.076	5.367	0.127	5.418
5	4.575	4.620	4.666	1.02	0.076	4.793	0.127	4.844
6	4.074	4.115	4.155	0.81	0.076	4.282	0.127	4.333
7	3.630	3.665	3.701	0.81	0.076	3.828	0.127	3.879
8	3.231	3.264	3.297	0.81	0.076	3.424	0.127	3.475
9	2.878	2.906	2.934	0.66	0.076	3.061	0.127	3.112
10	2.563	2.588	2.614	0.66	0.076	2.741	0.127	2.791
11	2.278	2.304	2.329	0.51	0.076	2.456	0.127	2.507
12	2.027	2.052	2.078	0.51	0.076	2.205	0.127	2.256
13	1.803	1.829	1.854	0.41	0.076	1.981	0.127	2.032
14	1.603	1.628	1.654	0.41	0.076	1.781	0.127	1.831

Copyright National Electrical Manufacturers Association
Provided by IHS under license with NEMA
No reproduction or networking permitted without license from IHS

Not for Resale

STD.NEMA MW 1000-ENGL 1997 ■ 6470247 0510288 144 ■

MW 19-C (Type 1)
POLYVINYL ACETAL WITH SELF-BONDING OVERCOAT, TYPE 1 FILM INSULATED ROUND COPPER MAGNET WIRE THERMAL CLASS 105

INSULATING MATERIALS The conductor shall be coated with a dual film. The underlying coating is based on a blend of polyvinyl acetal and phenolic resins (1.4.2). The superimposed coating is based on thermoplastic polyvinyl acetal resins (1.4.2).

THERMAL CLASS 105°C when tested in accordance with Part 1, para. 1.8 and Part 3, para. 3.58.1.

GENERAL REQUIREMENTS See Part 1.

Properties	Test Procedure, See Part 3, Paragraph	Requirements
DIMENSIONS	3.2.1.2	See Table T1 (MW 19-C)
ADHERENCE AND FLEXIBILITY	3.3.1	No cracks visible in the film coating
ELONGATION	3.4	Not less than value in Table T1 (MW 19-C)
HEAT SHOCK	3.5	No cracks visible in the film coating after conditioning at 175°C
SPRINGBACK	3.7.1	Not greater than value in Table T1 (MW 19-C)
DIELECTRIC STRENGTH	3.8.3	Not less than value in Table T1 (MW 19-C)
CONTINUITY	3.9.2	The number of discontinuities shall not exceed 15
COMPLETENESS OF CURE	3.10.1	No swelling or blistering visible in the film insulation
PERIODIC CONFORMANCE TESTS		
THERMOPLASTIC FLOW	3.50	Median not less than 180°C with Type 2 film insulated 18 or 36 AWG
SOLUBILITY	3.51	A specimen of Type 2 film insulated 18 or 36 AWG immersed in xylene shall not soften sufficiently to expose the bare conductor
DIELECTRIC STRENGTH AT RATED TEMPERATURE	3.52	Type 2 film insulated wire shall average not less than 4275 volts for 18 AWG or 1900 volts for 36 AWG
BOND—ROOM TEMPERATURE	3.57.3	Specimens of 18, 26, and 36 AWG Type 2, no separation of turns

Copyright National Electrical Manufacturers Association
Provided by IHS under license with NEMA
No reproduction or networking permitted without license from IHS
Not for Resale

Table T1 (MW 19-C)
POLYVINYL ACETAL WITH SELF-BONDING OVERCOAT, TYPE 1 FILM INSULATED ROUND COPPER MAGNET WIRE THERMAL CLASS 105

AWG Size	Bare Wire Diameter, Inches †			Insulation †			Elongation, Minimum Percent	Springback, Maximum Degrees per Turn	Dielectric Strength, Minimum Breakdown Volts	AWG Size
				Minimum Increase In Diameter, Inches		Maximum Overall Diameter, Inches				
	Minimum	Nominal	Maximum	Film Coating	Outer Coating					
14	0.0635	0.0641	0.0644*	0.0016	0.0006	0.0682	33	42	3525	14
15	0.0565	0.0571	0.0574*	0.0015	0.0006	0.0609	33	46	3425	15
16	0.0503	0.0508	0.0511*	0.0014	0.0006	0.0545	33	50	3325	16
17	0.0448	0.0453	0.0455*	0.0014	0.0006	0.0504	32	54	3250	17
18	0.0399	0.0403	0.0405*	0.0013	0.0006	0.0452	32	58	3175	18
19	0.0355	0.0359	0.0361*	0.0012	0.0006	0.0406	31	62	3075	19
20	0.0317	0.0320	0.0322*	0.0012	0.0005	0.0364	30	66	3000	20
21	0.0282	0.0285	0.0286*	0.0011	0.0005	0.0326	30	53	2925	21
22	0.0250	0.0253	0.0254*	0.0011	0.0005	0.0293	29	58	2850	22
23	0.0224	0.0226	0.0227*	0.0010	0.0005	0.0264	29	62	2775	23
24	0.0199	0.0201	0.0202*	0.0010	0.0005	0.0238	28	67	2700	24
25	0.0177	0.0179	0.0180*	0.0009	0.0005	0.0214	28	72	2625	25
26	0.0157	0.0159	0.0160*	0.0009	0.0005	0.0193	27	76	2550	26
27	0.0141	0.0142	0.0143	0.0008	0.0005	0.0173	27	50	2500	27
28	0.0125	0.0126	0.0127	0.0008	0.0005	0.0156	26	55	2425	28
29	0.0112	0.0113	0.0114	0.0007	0.0004	0.0142	26	61	2375	29
30	0.0099	0.0100	0.0101	0.0007	0.0004	0.0128	25	66	2300	30
31	0.0088	0.0089	0.0090	0.0006	0.0004	0.0115	24	...	2075	31
32	0.0079	0.0080	0.0081	0.0006	0.0004	0.0105	24	...	1850	32
33	0.0070	0.0071	0.0072	0.0005	0.0004	0.0095	23	...	1675	33
34	0.0062	0.0063	0.0064	0.0005	0.0003	0.0084	22	...	1500	34
35	0.0055	0.0056	0.0057	0.0004	0.0003	0.0076	21	...	1325	35
36	0.0049	0.0050	0.0051	0.0004	0.0003	0.0069	20	...	1200	36
37	0.0044	0.0045	0.0046	0.0003	0.0003	0.0062	20	...	1075	37
38	0.0039	0.0040	0.0041	0.0003	0.0002	0.0056	19	...	950	38
39	0.0034	0.0035	0.0036	0.0002	0.0002	0.0050	18	...	850	39
40	0.0030	0.0031	0.0032	0.0002	0.0002	0.0044	17	...	775	40
41	0.0027	0.0028	0.0029	0.0002	0.0002	0.0040	17	...	700	41
42	0.0024	0.0025	0.0026	0.0002	0.0002	0.0037	16	...	625	42
43	0.0021	0.0022	0.0023	0.0002	0.0001	0.0033	15	...	550	43
44	0.0019	0.0022	0.0021	0.0001	0.0001	0.0030	14	...	500	44

*This maximum bare diameter shall be permitted to be exceeded; see 1.6.7.2.
†For metric equivalents, see Table 1-4.

Copyright National Electrical Manufacturers Association
Provided by IHS under license with NEMA
No reproduction or networking permitted without license from IHS

Not for Resale

MW 19-C (Type 2)
POLYVINYL ACETAL WITH SELF-BONDING OVERCOAT, TYPE 2 FILM INSULATED ROUND COPPER MAGNET WIRE THERMAL CLASS 105

INSULATING MATERIALS The conductor shall be coated with a dual film. The underlying coating is based on a blend of polyvinyl acetal and phenolic resins (1.4.2). The superimposed coating is based on thermoplastic polyvinyl acetal resins (1.4.2).

THERMAL CLASS 105°C when tested in accordance with Part 1, para. 1.8 and Part 3, para. 3.58.1.

GENERAL REQUIREMENTS See Part 1.

Properties	Test Procedure, See Part 3, Paragraph	Requirements
DIMENSIONS	3.2.1.2	See Table T2 (MW 19-C)
ADHERENCE AND FLEXIBILITY	3.3.1	No cracks visible in the film coating
ELONGATION	3.4	Not less than value in Table T2 (MW 19-C)
HEAT SHOCK	3.5	No cracks visible in the film coating after conditioning at 175°C
SPRINGBACK	3.7.1	Not greater than value in Table T2 (MW 19-C)
DIELECTRIC STRENGTH	3.8.3	Not less than value in Table T2 (MW 19-C)
CONTINUITY	3.9.2	The number of discontinuities shall not exceed 5
COMPLETENESS OF CURE	3.10.1	No swelling or blistering visible in the film insulation
PERIODIC CONFORMANCE TESTS		
THERMOPLASTIC FLOW	3.50	Median not less than 180°C with Type 2 film insulated 18 or 36 AWG
SOLUBILITY	3.51	A specimen of Type 2 film insulated 18 or 36 AWG immersed in xylene shall not soften sufficiently to expose the bare conductor
DIELECTRIC STRENGTH AT RATED TEMPERATURE	3.52	Type 2 film insulated wire shall average not less than 4275 volts for 18 AWG or 1900 volts for 36 AWG
BOND—ROOM TEMPERATURE	3.57.3	Specimens of 18, 26, and 36 AWG Type 2, no separation of turns

Copyright National Electrical Manufacturers Association
Provided by IHS under license with NEMA
No reproduction or networking permitted without license from IHS

Not for Resale

Table T2 (MW 19-C)
POLYVINYL ACETAL WITH SELF-BONDING OVERCOAT, TYPE 2 FILM INSULATED ROUND COPPER MAGNET WIRE THERMAL CLASS 105

AWG Size	Bare Wire Diameter, Inches †			Insulation †			Elongation, Minimum Percent	Springback, Maximum Degrees per Turn	Dielectric Strength, Minimum Breakdown Volts	AWG Size
				Minimum Increase In Diameter, Inches		Maximum Overall Diameter, Inches				
	Minimum	Nominal	Maximum	Film Coating	Outer Coating					
14	0.0635	0.0641	0.0644*	0.0032	0.0006	0.0700	33	46	6325	14
15	0.0565	0.0571	0.0574*	0.0030	0.0006	0.0627	33	49	6175	15
16	0.0503	0.0508	0.0511*	0.0029	0.0006	0.0562	33	53	6000	16
17	0.0448	0.0453	0.0455*	0.0028	0.0006	0.0504	32	58	5850	17
18	0.0399	0.0403	0.0405*	0.0026	0.0006	0.0452	32	62	5700	18
19	0.0317	0.0359	0.0361*	0.0025	0.0006	0.0406	31	66	5550	19
20	0.0317	0.0320	0.0322*	0.0023	0.0005	0.0364	30	70	5400	20
21	0.0282	0.0285	0.0286*	0.0022	0.0005	0.0326	30	53	5250	21
22	0.0250	0.0253	0.0254*	0.0021	0.0005	0.0293	29	58	5125	22
23	0.0224	0.0226	0.0227*	0.0020	0.0005	0.0264	29	64	5000	23
24	0.0199	0.0201	0.0202*	0.0019	0.0005	0.0238	28	69	4850	24
25	0.0177	0.0179	0.0180*	0.0018	0.0005	0.0214	28	74	4725	25
26	0.0157	0.0159	0.0160*	0.0017	0.0005	0.0193	27	80	4600	26
27	0.0141	0.0142	0.0143	0.0016	0.0005	0.0173	27	55	4500	27
28	0.0125	0.0126	0.0127	0.0016	0.0005	0.0156	26	60	4375	28
29	0.0112	0.0113	0.0114	0.0015	0.0005	0.0142	26	65	4250	29
30	0.0099	0.0100	0.0101	0.0014	0.0005	0.0128	25	70	4150	30
31	0.0088	0.0089	0.0090	0.0013	0.0004	0.0115	24	...	3825	31
32	0.0079	0.0080	0.0081	0.0012	0.0004	0.0105	24	...	3525	32
33	0.0070	0.0071	0.0072	0.0011	0.0004	0.0095	23	...	3250	33
34	0.0062	0.0063	0.0064	0.0010	0.0003	0.0084	22	...	2975	34
35	0.0055	0.0056	0.0057	0.0009	0.0003	0.0076	21	...	2750	35
36	0.0049	0.0050	0.0051	0.0008	0.0003	0.0069	20	...	2525	36
37	0.0044	0.0045	0.0046	0.0008	0.0003	0.0062	20	...	2325	37
38	0.0039	0.0040	0.0041	0.0007	0.0002	0.0056	19	...	2150	38
39	0.0034	0.0035	0.0036	0.0006	0.0002	0.0050	18	...	1975	39
40	0.0030	0.0031	0.0032	0.0006	0.0002	0.0044	17	...	1800	40
41	0.0027	0.0028	0.0029	0.0005	0.0002	0.0040	17	...	1675	41
42	0.0024	0.0025	0.0026	0.0004	0.0002	0.0037	16	...	1525	42
43	0.0021	0.0022	0.0023	0.0004	0.0001	0.0033	15	...	1400	43
44	0.0019	0.0022	0.0021	0.0004	0.0001	0.0030	14	...	1300	44

*This maximum bare diameter shall be permitted to be exceeded; see 1.6.7.2.
†For metric equivalents, see Table 1-5.

Copyright National Electrical Manufacturers Association
Provided by IHS under license with NEMA
No reproduction or networking permitted without license from IHS

Not for Resale

MW 19-C (Type 3)
POLYVINYL ACETAL WITH SELF-BONDING OVERCOAT, TYPE 3 FILM INSULATED ROUND COPPER MAGNET WIRE THERMAL CLASS 105

INSULATING MATERIALS The conductor shall be coated with a dual film. The underlying coating is based on a blend of polyvinyl acetal and phenolic resins (1.4.2). The superimposed coating is based on thermoplastic polyvinyl acetal resins (1.4.2).

THERMAL CLASS 105°C when tested in accordance with Part 1, para. 1.8 and Part 3, para. 3.58.1.

GENERAL REQUIREMENTS See Part 1.

Properties	Test Procedure, See Part 3, Paragraph	Requirements
DIMENSIONS	3.2.1.2	See Table T3 (MW 19-C)
ADHERENCE AND FLEXIBILITY	3.3.1	No cracks visible in the film coating
ELONGATION	3.4	Not less than value in Table T3 (MW 19-C)
HEAT SHOCK	3.5	No cracks visible in the film coating after conditioning at 175°C
SPRINGBACK	3.7.1	Not greater than value in Table T3 (MW 19-C)
DIELECTRIC STRENGTH	3.8.3	Not less than value in Table T3 (MW 19-C)
CONTINUITY	3.9.2	The number of discontinuities shall not exceed 3
COMPLETENESS OF CURE	3.10.1	No swelling or blistering visible in the film insulation
PERIODIC CONFORMANCE TESTS		
THERMOPLASTIC FLOW	3.50	Median not less than 180°C with Type 2 film insulated 18 or 36 AWG
SOLUBILITY	3.51	A specimen of Type 2 film insulated 18 or 36 AWG immersed in xylene shall not soften sufficiently to expose the bare conductor
DIELECTRIC STRENGTH AT RATED TEMPERATURE	3.52	Type 2 film insulated wire shall average not less than 4275 volts for 18 AWG
BOND—ROOM TEMPERATURE	3.57.3.1	Specimens of 18 and 26 AWG Type 2, no separation of turns

Copyright National Electrical Manufacturers Association
Provided by IHS under license with NEMA
No reproduction or networking permitted without license from IHS

Not for Resale

Table T3 (MW 19-C)
POLYVINYL ACETAL WITH SELF-BONDING OVERCOAT, TYPE 3 FILM INSULATED ROUND COPPER MAGNET WIRE THERMAL CLASS 105

AWG Size	Bare Wire Diameter, Inches †			Insulation †						AWG Size
				Minimum Increase In Diameter, Inches		Maximum Overall Diameter, Inches	Elongation, Minimum Percent	Springback, Maximum Degrees per Turn	Dielectric Strength, Minimum Breakdown Volts	
	Minimum	Nominal	Maximum	Film Coating	Outer Coating					
16	0.0503	0.0508	0.0511*	0.0043	0.0006	0.0577	33	53	8000	16
17	0.0448	0.0453	0.0455*	0.0041	0.0006	0.0520	32	58	7800	17
18	0.0399	0.0403	0.0405*	0.0039	0.0006	0.0468	32	62	7600	18
19	0.0355	0.0359	0.0361*	0.0037	0.0006	0.0422	31	66	7400	19
20	0.0317	0.0320	0.0322*	0.0035	0.0005	0.0379	30	70	7200	20
21	0.0282	0.0285	0.0286*	0.0033	0.0005	0.0342	30	53	7025	21
22	0.0250	0.0253	0.0254*	0.0032	0.0005	0.0308	29	58	6850	22
23	0.0224	0.0226	0.0227*	0.0030	0.0005	0.0279	29	64	6675	23
24	0.0199	0.0201	0.0202*	0.0029	0.0005	0.0252	28	69	6500	24
25	0.0177	0.0179	0.0180*	0.0027	0.0005	0.0228	28	74	6325	25
26	0.0157	0.0159	0.0160*	0.0026	0.0005	0.0206	27	80	6150	26
27	0.0141	0.0142	0.0143	0.0024	0.0005	0.0185	27	55	6000	27
28	0.0125	0.0126	0.0127	0.0023	0.0005	0.0166	26	60	5850	28
29	0.0112	0.0113	0.0114	0.0022	0.0004	0.0152	26	65	5700	29
30	0.0099	0.0100	0.0101	0.0021	0.0004	0.0137	25	70	5550	30

*This maximum bare diameter shall be permitted to be exceeded; see 1.6.7.2.

† For metric equivalents, see Table 1-6.

Copyright National Electrical Manufacturers Association
Provided by IHS under license with NEMA
No reproduction or networking permitted without license from IHS

Not for Resale

MW 20-C (Heavy and Quadruple)
POLYIMIDE, HEAVY AND QUADRUPLE FILM INSULATED RECTANGULAR AND SQUARE COPPER MAGNET WIRE THERMAL CLASS 240

INSULATING MATERIALS The coating is based on aromatic polyimide resins (1.4.2).

THERMAL CLASS 240°C. The temperature index must meet or exceed 240°C when tested in accordance with Part 1, para. 1.8 and Part 3, para. 3.58.1.

GENERAL REQUIREMENTS See Part 1.

Properties	Test Procedure, See Part 3, Paragraph	Requirements
DIMENSIONS	3.2.2.1	Rectangular Wire: a. Dimensions and radii—see Table 1-13 b. Thickness and width tolerances—see Table 1-14 c. Increase in thickness and width due to film coating—see Table TW (MW 20-C) Square Wire: Bare wire dimensions and tolerances, radii, and increase in dimensions due to film coating-see Table SQ (MW 20-C)
ADHERENCE AND FLEXIBILITY	3.3.3	No cracks visible in the film coating after 30 percent elongation
ELONGATION	3.4	Not less than 32 percent for thickness of 0.049 inch (1.25 mm) and greater or 30 percent for thickness less than 0.049 inch (1.25 mm)
HEAT SHOCK	3.5	No cracks visible in the film coating after 15 percent elongation followed by conditioning at 280°C ± 3°C
SPRINGBACK	3.7.2	Not greater than 5°
DIELECTRIC STRENGTH	3.8.2	Minimum Breakdown Voltage Film Coating / Any Three of Four Electrodes / Fourth Electrode Heavy: 1500 / 500 Quadruple: 2500 / 900
COMPLETENESS OF CURE	3.10.2	Dissipation factor not greater than 0.60 percent

PERIODIC CONFORMANCE TESTS

THERMOPLASTIC FLOW	3.50	Median not less than 450°C with heavy film insulated 18 AWG
SOLUBILITY	3.51	Two specimens immersed in xylene and 50/50 xylene/butyl Cellosolve shall not soften sufficiently to expose the bare conductor
DIELECTRIC SRENGTH AT RATED TEMPERATURE	3.52	Average not less than 4275 volts with heavy film insulated 18 AWG

Copyright National Electrical Manufacturers Association
Provided by IHS under license with NEMA
No reproduction or networking permitted without license from IHS

Not for Resale

POLYIMIDE, HEAVY AND QUADRUPLE FILM INSULATED RECTANGULAR AND SQUARE COPPER MAGNET WIRE THERMAL CLASS 240

Table TW (MW 20-C) Rectangular Increase in Thickness and Width Due to Film Coating

	Increase in Width				Increase in Thickness			
	Minimum		Maximum*		Minimum		Maximum*	
Build	inches	mm	inches	mm	inches	mm	inches	mm
Heavy	0.0025	0.064	0.0045	0.114	0.0030	0.076	0.0050	0.127
Quadruple	0.0040	0.102	0.0060	0.152	0.0050	0.127	0.0070	0.178

* The maximum increase shall be permitted to be exceeded provided the maximum overall dimensions of the coated wire does not exceed the sum of the maximum dimensions of the bare wire plus the maximum increase due to the coating .

Table SQ (MW 20-C) Inches—Dimensions 1–14 AWG Square

Square					Heavy		Quadruple	
AWG	Bare Wire Dimensions			Nominal	Minimum	Maximum	Minimum	Maximum
Size	Minimum	Nominal	Maximum	Radii (± 25%)	Increase	Overall	Increase	Overall
1	0.2864	0.2893	0.2922	0.040	0.0030	0.2972	0.0050	0.2992
2	0.2550	0.2576	0.2602	0.040	0.0030	0.2652	0.0050	0.2672
3	0.2271	0.2294	0.2317	0.040	0.0030	0.2367	0.0050	0.2387
4	0.2023	0.2043	0.2063	0.040	0.0030	0.2113	0.0050	0.2133
5	0.1801	0.1819	0.1837	0.040	0.0030	0.1887	0.0050	0.1907
6	0.1604	0.1620	0.1636	0.032	0.0030	0.1686	0.0050	0.1706
7	0.1429	0.1443	0.1457	0.032	0.0030	0.1507	0.0050	0.1527
8	0.1272	0.1285	0.1298	0.032	0.0030	0.1348	0.0050	0.1368
9	0.1133	0.1144	0.1155	0.026	0.0030	0.1205	0.0050	0.1225
10	0.1009	0.1019	0.1029	0.026	0.0030	0.1079	0.0050	0.1099
11	0.0897	0.0907	0.0917	0.020	0.0030	0.0967	0.0050	0.0987
12	0.0798	0.0808	0.0818	0.020	0.0030	0.0868	0.0050	0.0888
13	0.0710	0.0720	0.0730	0.016	0.0030	0.0780	0.0050	0.0800
14	0.0631	0.0641	0.0651	0.016	0.0030	0.0701	0.0050	0.0721

Table SQ (MW 20-C) mm—Dimensions 1–14 AWG Square

Square					Heavy		Quadruple	
AWG	Bare Wire Dimensions			Nominal	Minimum	Maximum	Minimum	Maximum
Size	Minimum	Nominal	Maximum	Radii (± 25%)	Increase	Overall	Increase	Overall
1	7.275	7.348	7.422	1.02	0.076	7.549	0.127	7.600
2	6.477	6.543	6.609	1.02	0.076	6.736	0.127	6.787
3	5.768	5.827	5.885	1.02	0.076	6.012	0.127	6.063
4	5.138	5.189	5.240	1.02	0.076	5.367	0.127	5.418
5	4.575	4.620	4.666	1.02	0.076	4.793	0.127	4.844
6	4.074	4.115	4.155	0.81	0.076	4.282	0.127	4.333
7	3.630	3.665	3.701	0.81	0.076	3.828	0.127	3.879
8	3.231	3.264	3.297	0.81	0.076	3.424	0.127	3.475
9	2.878	2.906	2.934	0.66	0.076	3.061	0.127	3.112
10	2.563	2.588	2.614	0.66	0.076	2.741	0.127	2.791
11	2.278	2.304	2.329	0.51	0.076	2.456	0.127	2.507
12	2.027	2.052	2.078	0.51	0.076	2.205	0.127	2.256
13	1.803	1.829	1.854	0.41	0.076	1.981	0.127	2.032
14	1.603	1.628	1.654	0.41	0.076	1.781	0.127	1.831

Copyright National Electrical Manufacturers Association
Provided by IHS under license with NEMA
No reproduction or networking permitted without license from IHS
Not for Resale

MW 24-A (Single)
POLYESTER (AMIDE) (IMIDE), OVERCOATED WITH POLYAMIDE, SINGLE FILM INSULATED ROUND ALUMINUM MAGNET WIRE THERMAL CLASS 155

INSULATING MATERIALS The conductor shall be coated with a dual film. The underlying coating is based on polyester (amide) (imide) resins (1.4.2). The superimposed coating is based on polyamide resins (1.4.2).

THERMAL CLASS 155°C when tested in accordance with Part 1, para. 1.8 and Part 3, para 3.58.1.

GENERAL REQUIREMENTS See Part 1.

Properties	Test Procedure, See Part 3, Paragraph	Requirements
DIMENSIONS	3.2.1.1	See Table S (MW 24-A)
ADHERENCE AND FLEXIBILITY	3.3.1	No cracks visible in the film coating
ELONGATION	3.4	Not less than value in Table S (MW 24-A)
HEAT SHOCK	3.5	No cracks visible in the film coating after conditioning at 175°C
DIELECTRIC STRENGTH	3.8.3	Not less than value in Table S (MW 24-A)
CONTINUITY	3.9.2	The number of discontinuities shall not exceed 25
PERIODIC CONFORMANCE TESTS		
THERMOPLASTIC FLOW	3.50	Median not less than 200°C with heavy film insulated 18 AWG
SOLUBILITY	3.51	Two specimens of heavy film insulated 18 AWG immersed in xylene and 50/50 xylene/butyl Cellosolve shall not soften sufficiently to expose the bare conductor.
DIELECTRIC STRENGTH AT RATED TEMPERATURE	3.52	Average not less than 3825 volts with heavy film insulated 18 AWG
SCRAPE RESISTANCE	3.59	Lowest "grams-to-fail" load for any one of the three tests and the average of the three tests shall be not less than the values in Table S (MW 24-A)

Copyright National Electrical Manufacturers Association
Provided by IHS under license with NEMA
No reproduction or networking permitted without license from IHS

Not for Resale

Table S (MW 24-A)
POLYESTER (AMIDE) (IMIDE) OVERCOATED WITH POLYAMIDE, SINGLE FILM INSULATED ROUND ALUMINUM MAGNET WIRE THERMAL CLASS 155

AWG Size	Bare Wire Diameter Inches †			Insulation †		Elongation, Minimum	Scrape, Grams to Fail		Dielectric Strength, Minimum Breakdown	AWG Size
	Minimum	Nominal	Maximum	Minimum Increase in Diameter, Inches	Maximum Overall Diameter, Inches	Percent	Average	Minimum	Volts	
14	0.0635	0.0641	0.0644*	0.0016	0.0666	15	505	430	3175	14
15	0.0565	0.0571	0.0574*	0.0015	0.0594	15	470	400	3075	15
16	0.0503	0.0508	0.0511*	0.0014	0.0531	15	440	375	3000	16
17	0.0448	0.0453	0.0455*	0.0014	0.0475	15	415	350	2925	17
18	0.0399	0.0403	0.0405*	0.0013	0.0424	15	390	330	2850	18
19	0.0355	0.0359	0.0361*	0.0012	0.0379	15	360	305	2775	19
20	0.0317	0.0320	0.0322*	0.0012	0.0339	14	335	285	2700	20
21	0.0282	0.0285	0.0286*	0.0011	0.0303	14	315	265	2625	21
22	0.0250	0.0253	0.0254*	0.0011	0.0270	14	295	250	2575	22
23	0.0224	0.0226	0.0227*	0.0010	0.0243	14	275	235	2500	23
24	0.0199	0.0201	0.0202*	0.0010	0.0217	13	260	220	2425	24

*This maximum bare wire diameter shall be permitted to be exceeded; see 1.6.7.2.
†For metric equivalent, see Table 1-1.

Copyright National Electrical Manufacturers Association
Provided by IHS under license with NEMA
No reproduction or networking permitted without license from IHS

Not for Resale

MW 24-A (Heavy)
POLYESTER (AMIDE) (IMIDE) OVERCOATED WITH POLYAMIDE, HEAVY FILM INSULATED ROUND ALUMINUM MAGNET WIRE THERMAL CLASS 155

INSULATING MATERIALS The conductor shall be coated with a dual film. The underlying coating is based on polyester (amide) (imide) resins (1.4.2). The superimposed coating is based on a blend of polyamide resins (1.4.2).

THERMAL CLASS 155°C when tested in accordance with Part 1, para. 1.8 and Part 3, para. 3.58.1.

GENERAL REQUIREMENT See Part 1.

Properties	Test Procedure, See Part 3, Paragraph	Requirements
DIMENSIONS	3.2.1.1	See Table H (MW 24-A)
ADHERENCE AND FLEXIBILITY	3.3.1	No cracks visible in the film coating
ELONGATION	3.4	Not less than value in Table H (MW 24-A)
HEAT SHOCK	3.5	No cracks visible in the film coating after conditioning at 175°C
DIELECTRIC STRENGTH	3.8.3	Not less than value in Table H (MW 24-A)
CONTINUITY	3.9.2	The number of discontinuities shall not exceed 10 for 14–24 AWG
PERIODIC CONFORMANCE TESTS		
THERMOPLASTIC FLOW	3.50	Median not less than 200°C with heavy film insulated 18 AWG
SOLUBILITY	3.51	Two specimens of heavy film insulated 18 AWG immersed in xylene and 50/50 xylene/butyl Cellosolve shall not soften sufficiently to expose the bare conductor.
DIELECTRIC STRENGTH AT RATED TEMPERATURE	3.52	Average not less than 4275 volts with heavy film insulated 18 AWG
SCRAPE RESISTANCE	3.59	Lowest "grams-to-fail" load for any one of the three test and the average of the three test shall be not less than the values in Table H (MW 24-A)

Copyright National Electrical Manufacturers Association
Provided by IHS under license with NEMA
No reproduction or networking permitted without license from IHS

Not for Resale

Table H (MW 24-A)
POLYESTER (AMIDE) (IMIDE) OVERCOATED WITH POLYAMIDE, HEAVY FILM INSULATED ROUND ALUMINUM MAGNET WIRE THERMAL CLASS 155

AWG Size	Bare Wire Diameter, Inches †			Insulation †		Elongation, Minimum	Scrape, Grams to Fail		Dielectric Strength, Minimum Breakdown	AWG Size
	Minimum	Nominal	Maximum	Minimum Increase in Diameter, Inches	Maximum Overall Diameter, Inches	Percent	Average	Minimum	Volts	
10	0.1009	0.1019	0.1024*	0.0031	0.1061	15	895	760	5575	10
11	0.0898	0.0907	0.0912*	0.0030	0.0948	15	895	760	5400	11
12	0.0800	0.0808	0.0812*	0.0029	0.0847	15	895	760	5225	12
13	0.0713	0.0720	0.0724*	0.0028	0.0757	15	895	760	5050	13
14	0.0635	0.0641	0.0644*	0.0032	0.0682	15	895	760	5700	14
15	0.0565	0.0571	0.0574*	0.0030	0.0609	15	840	715	5550	15
16	0.0503	0.0508	0.0511*	0.0029	0.0545	15	785	670	5400	16
17	0.0448	0.0453	0.0455*	0.0028	0.0488	15	740	625	5275	17
18	0.0399	0.0403	0.0405*	0.0026	0.0437	15	690	590	5125	18
19	0.0355	0.0359	0.0361*	0.0025	0.0391	15	640	545	5000	19
20	0.0317	0.0320	0.0322*	0.0023	0.0351	14	600	510	4850	20
21	0.0282	0.0285	0.0286*	0.0022	0.0314	14	565	480	4725	21
22	0.0250	0.0253	0.0254*	0.0021	0.0281	14	530	450	4625	22
23	0.0224	0.0226	0.0227*	0.0020	0.0253	14	490	420	4500	23
24	0.0199	0.0201	0.0202*	0.0019	0.0227	13	460	395	4375	24

*This maximum bare diameter shall be permitted to be exceeded; see 1.6.7.2.
†For metric equivalent, see Table 1-2.

Copyright National Electrical Manufacturers Association
Provided by IHS under license with NEMA
No reproduction or networking permitted without license from IHS

Not for Resale

MW 24-C (Single)
POLYESTER (AMIDE) (IMIDE) OVERCOATED WITH POLYAMIDE, SINGLE FILM INSULATED ROUND COPPER MAGNET WIRE THERMAL CLASS 155

INSULATING MATERIALS The conductor shall be coated with dual film. The underlying coating is based on polyester (amide) (imide) resins (1.4.2). The superimposed coating is based on polyamide resins (1.4.2).

THERMAL CLASS 155°C when tested in accordance with Part 1, para. 1.8 and Part 3, para. 3.58.1.

GENERAL REQUIREMENTS See Part 1.

Properties	Test Procedure, See Part 3, Paragraph	Requirements
DIMENSIONS	3.2.1.1	See Table S (MW 24-C)
ADHERENCE AND FLEXIBILITY	3.3.1	No cracks visible in the film coating
ELONGATION	3.4	Not less than value in Table S (MW 24-C)
HEAT SHOCK	3.5	No cracks visible in the film coating after conditioning at 175°C
SPRINGBACK	3.7.1	Not greater than value in Table S (MW 24-C)
DIELECTRIC STRENGTH	3.8.3	Not less than value in Table S (MW 24-C)
CONTINUITY	3.9.2	The number of discontinuities shall not exceed 15
PERIODIC CONFORMANCE TESTS		
THERMOPLASTIC FLOW	3.50	Median not less than 200°C with heavy film insulated 18 AWG
SOLUBILITY	3.51	Two specimens of heavy film insulated 18 AWG immersed in xylene and 50/50 xylene/butyl Cellosolve shall not soften sufficiently to expose the bare conductor
DIELECTRIC STRENGTH AT RATED TEMPERATURE	3.52	Average not less than 3825 volts with heavy film insulated 18 AWG
SCRAPE RESISTANCE	3.59	Lowest "grams-to-fail" load for any one of the three tests and the average of the three tests shall be not less than the values in Table S (MW 24-C)

Copyright National Electrical Manufacturers Association
Provided by IHS under license with NEMA
No reproduction or networking permitted without license from IHS

Not for Resale

Table S (MW 24-C)
POLYESTER (AMIDE) (IMIDE) OVERCOATED WITH POLYAMIDE, SINGLE FILM INSULATED ROUND COPPER MAGNET WIRE THERMAL CLASS 155

AWG Size	Bare Wire Diameter, Inches †			Insulation †		Elongation, Minimum Percent	Scrape, Grams to Fail		Springback, Maximum Degrees per Turn	Dielectric Strength, Minimum Breakdown Volts	AWG Size
	Minimum	Nominal	Maximum	Minimum Increase in Diameter, Inches	Maximum Overall Diameter, Inches		Average	Minimum			
14	0.0635	0.0641	0.0644*	0.0016	0.0666	33	840	715	42	3175	14
15	0.0565	0.0571	0.0574*	0.0015	0.0594	33	780	665	46	3075	15
16	0.0503	0.0508	0.0511*	0.0014	0.0531	33	735	625	50	3000	16
17	0.0448	0.0453	0.0455*	0.0014	0.0475	32	690	585	54	2925	17
18	0.0399	0.0403	0.0405*	0.0013	0.0424	32	645	550	58	2850	18
19	0.0355	0.0359	0.0361*	0.0012	0.0379	31	600	510	62	2775	19
20	0.0317	0.0320	0.0322*	0.0012	0.0339	30	560	475	66	2700	20
21	0.0282	0.0285	0.0286*	0.0011	0.0303	30	525	445	53	2625	21
22	0.0250	0.0253	0.0254*	0.0011	0.0270	29	490	415	58	2575	22
23	0.0224	0.0226	0.0227*	0.0010	0.0243	29	460	390	62	2500	23
24	0.0199	0.0201	0.0202*	0.0010	0.0217	28	430	365	67	2425	24
25	0.0177	0.0179	0.0180*	0.0009	0.0194	28	400	340	72	2375	25
26	0.0157	0.0159	0.0160*	0.0009	0.0173	27	380	325	76	2300	26
27	0.0141	0.0142	0.0143	0.0008	0.0156	27	355	300	50	2250	27
28	0.0125	0.0126	0.0127	0.0008	0.0140	26	335	285	55	2175	28
29	0.0112	0.0113	0.0114	0.0007	0.0126	26	310	265	61	2150	29
30	0.0099	0.0100	0.0101	0.0007	0.0112	25	295	250	66	2075	30

*This maximum bare diameter shall be permitted to be exceeded; see 1.6.7.2.
†For metric equivalents, see Table 1-1.

Copyright National Electrical Manufacturers Association
Provided by IHS under license with NEMA
No reproduction or networking permitted without license from IHS

Not for Resale

MW 24-C (Heavy)
POLYESTER (AMIDE) (IMIDE) OVERCOATED WITH POLYAMIDE, HEAVY
FILM INSULATED ROUND COPPER MAGNET WIRE THERMAL CLASS 155

INSULATING MATERIALS The conductor shall be coated with dual film. The underlying coating is based on polyester (amide) (imide) resins (1.4.2). The superimposed coating is based on a blend of polyamide resins (1.4.2).

THERMAL CLASS 155°C when tested in accordance with Part 1, para. 1.8 and Part 3, para. 3.58.1.

GENERAL REQUIREMENTS See Part 1.

Properties	Test Procedure, See Part 3, Paragraph	Requirements
DIMENSIONS	3.2.1.1	See Table H (MW 24-C)
ADHERENCE AND FLEXIBILITY	3.3.1	No cracks visible in the film coating
ELONGATION	3.4	Not less than value in Table H (MW 24-C)
HEAT SHOCK	3.5	No cracks visible in the film coating after conditioning at 175°C
SPRINGBACK	3.7.1 3.7.2	14-30 AWG—Not greater than value in Table H (MW 24-C) 10–13 AWG—Not greater than 5°
DIELECTRIC STRENGTH	3.8.3	Not less than value in Table H (MW 24-C)
CONTINUITY	3.9.2	The number of discontinuities shall not exceed 5 for 14–30 AWG
PERIODIC CONFORMANCE TESTS		
THERMOPLASTIC FLOW	3.50	Median not less than 200°C with heavy film insulated 18 AWG
SOLUBILITY	3.51	Two specimens of heavy film insulated 18 AWG immersed in xylene and 50/50 xylene/butyl Cellosolve shall not soften sufficiently to expose the bare conductor
DIELECTRIC STRENGTH AT RATED TEMPERATURE	3.52	Average not less than 3825 volts with heavy film insulated 18 AWG
SCRAPE RESISTANCE	3.59	Lowest "grams-to-fail" load for any one of the three tests and the average of the three tests shall be not less than the values in Table H (MW 24-C)

Copyright National Electrical Manufacturers Association
Provided by IHS under license with NEMA
No reproduction or networking permitted without license from IHS

Not for Resale

Table H (MW 24-C)
POLYESTER (AMIDE) (IMIDE) OVERCOATED WITH POLYAMIDE, HEAVY FILM INSULATED ROUND COPPER MAGNET WIRE THERMAL CLASS 155

AWG Size	Bare Wire Diameter, Inches †			Insulation †		Elongation, Minimum Percent	Scrape, Grams to Fail		Springback, Maximum Degrees per Turn	Dielectric Strength, Minimum Breakdown Volts	AWG Size
	Minimum	Nominal	Maximum	Minimum Increase in Diameter, Inches	Maximum Overall Diameter, Inches		Average	Minimum			
10	0.1009	0.1019	0.1024*	0.0031	0.1061	35	1490	1270	...	5575	10
11	0.0898	0.0907	0.0912*	0.0030	0.0948	35	1490	1270	...	5400	11
12	0.0800	0.0808	0.0812*	0.0029	0.0847	34	1490	1270	...	5225	12
13	0.0713	0.0720	0.0724*	0.0028	0.0757	34	1490	1270	...	5050	13
14	0.0635	0.0641	0.0644*	0.0032	0.0682	33	1490	1270	42	5700	14
15	0.0565	0.0571	0.0574*	0.0030	0.0609	33	1400	1190	46	5550	15
16	0.0503	0.0508	0.0511*	0.0029	0.0545	33	1310	1115	50	5400	16
17	0.0448	0.0453	0.0455*	0.0028	0.0488	32	1230	1045	54	5275	17
18	0.0399	0.0403	0.0405*	0.0026	0.0437	32	1150	980	58	5125	18
19	0.0355	0.0359	0.0361*	0.0025	0.0391	31	1070	910	62	5000	19
20	0.0317	0.0320	0.0322*	0.0023	0.0351	30	1000	850	66	4850	20
21	0.0282	0.0285	0.0286*	0.0022	0.0314	30	940	800	53	4725	21
22	0.0250	0.0253	0.0254*	0.0021	0.0281	29	880	750	58	4625	22
23	0.0224	0.0226	0.0227*	0.0020	0.0253	29	820	700	62	4500	23
24	0.0199	0.0201	0.0202*	0.0019	0.0227	28	770	655	67	4375	24
25	0.0177	0.0179	0.0180*	0.0018	0.0203	28	720	615	72	4250	25
26	0.0157	0.0159	0.0160*	0.0017	0.0182	27	675	575	76	4150	26
27	0.0141	0.0142	0.0143	0.0016	0.0164	27	635	540	50	4050	27
28	0.0125	0.0126	0.0127	0.0016	0.0147	26	595	510	55	3950	28
29	0.0112	0.0113	0.0114	0.0015	0.0133	26	560	480	61	3825	29
30	0.0099	0.0100	0.0101	0.0014	0.0119	25	525	450	66	3725	30

*This maximum bare diameter shall be permitted to be exceeded; see 1.6.7.2.
†For metric equivalent, see Table 1-2.

Copyright National Electrical Manufacturers Association
Provided by IHS under license with NEMA
No reproduction or networking permitted without license from IHS

Not for Resale

MW 24-C (Triple)
POLYESTER (AMIDE) (IMIDE) OVERCOATED WITH POLYAMIDE, TRIPLE FILM INSULATED ROUND COPPER MAGNET WIRE THERMAL CLASS 155

INSULATING MATERIAL The conductor shall be coated with a dual film. The underlying coating is based on polyester (amide) (imide) resins (1.4.2). the superimposed coating is based on a blend of polyamide resins (1.4.2).

THERMAL CLASS 155°C when tested in accordance with Part 1, para. 1.8 and Part 3, para. 3.58.1.

GENERAL REQUIREMENTS See Part 1.

Properties	Test Procedure, See Part 3, Paragraph	Requirements
DIMENSIONS	3.2.1.1	See Table T (MW 24-C)
ADHERENCE AND FLEXIBILITY	3.3.1	No cracks visible in the film coating
ELONGATION	3.4	Not less than value in Table T (MW 24-C)
HEAT SHOCK	3.5	No cracks visible in the film coating after conditioning at 175°C
SPRINGBACK	3.7.1	Not greater than value in Table T (MW 24-C)
DIELECTRIC STRENGTH	3.8.3	Not less than value in Table T (MW 24-C)
CONTINUITY	3.9.2	The number of discontinuities shall not exceed 3
PERIODIC CONFORMANCE TESTS		
THERMOPLASTIC FLOW	3.50	Median not less than 200°C with heavy film insulated 18 AWG
SOLUBILITY	3.51	Two specimens of heavy film insulated 18 AWG immersed in xylene and 50/50 xylene/butyl Cellsolve shall not soften sufficiently to expose the bare conductor
DIELECTRIC STRENGTH AT RATED TEMPERATURE	3.52	Average not less than 3825 volts with heavy film insulated 18 AWG
SCRAPE RESISTANCE	3.59	Lowest "grams-to-fail" load for any one of the three tests and the average of the three tests shall be not less than the values in Table T (MW 24-C)

Copyright National Electrical Manufacturers Association
Provided by IHS under license with NEMA
No reproduction or networking permitted without license from IHS

Not for Resale

Table T (MW 24-C)
POLYESTER (AMIDE) (IMIDE) OVERCOATED WITH POLYAMIDE, TRIPLE FILM INSULATED ROUND COPPER MAGNET WIRE THERMAL CLASS 155

AWG Size	Bare Wire Diameter, Inches †			Insulation †		Elongation, Minimum	Scrape, Grams to Fail		Springback, Maximum Degrees	Dielectric Strength, Minimum Breakdown	AWG Size
	Minimum	Nominal	Maximum	Minimum Increase in Diameter, Inches	Maximum Overall Diameter, Inches	Percent	Average	Minimum	per Turn	Volts	
14	0.0635	0.0641	0.0644*	0.0048	0.0700	33	1735	1475	46	7600	14
15	0.0565	0.0571	0.0574*	0.0045	0.0627	33	1620	1375	49	7400	15
16	0.0503	0.0508	0.0511*	0.0043	0.0562	33	1525	1295	53	7200	16
17	0.0448	0.0453	0.0455*	0.0041	0.0504	32	1425	1210	58	7025	17
18	0.0399	0.0403	0.0405*	0.0039	0.0452	32	1335	1135	62	6850	18
19	0.0355	0.0359	0.0361*	0.0037	0.0406	31	1255	1065	66	6675	19
20	0.0317	0.0320	0.0322*	0.0035	0.0364	30	1180	1000	70	6475	20
21	0.0282	0.0285	0.0286*	0.0033	0.0326	30	1115	945	53	6325	21
22	0.0250	0.0253	0.0254*	0.0032	0.0293	29	1045	890	58	6175	22
23	0.0224	0.0226	0.0227*	0.0030	0.0264	29	975	830	64	6000	23
24	0.0199	0.0201	0.0202*	0.0029	0.0238	28	910	770	69	5850	24
25	0.0177	0.0179	0.0180*	0.0027	0.0214	28	850	720	74	5700	25
26	0.0157	0.0159	0.0160	0.0026	0.0193	27	795	675	80	5525	26
27	0.0141	0.0142	0.0143	0.0024	0.0173	27	735	625	55	5400	27
28	0.0125	0.0126	0.0127	0.0023	0.0156	26	690	585	60	5275	28
29	0.0112	0.0113	0.0114	0.0022	0.0142	26	645	550	65	5125	29
30	0.0099	0.0100	0.0101	0.0021	0.0128	25	605	515	70	5000	30

*This maximum bare wire diameter shall be permitted to be exceeded; see 1.6.7.2.
†For metric equivalent, see Table 1-3.

Copyright National Electrical Manufacturers Association
Provided by IHS under license with NEMA
No reproduction or networking permitted without license from IHS

Not for Resale

MW 26-C (Single)
POLYESTER (IMIDE), SINGLE FILM INSULATED ROUND COPPER MAGNET WIRE FOR SOLDERABLE APPLICATIONS THERMAL CLASS 155

INSULATING MATERIALS The coating is based on polyester (imide) resins (1.4.2).

THERMAL CLASS 155°C when tested in accordance with Part 1, para. 1.8 and Part 3, para 3.58.1.

GENERAL REQUIREMENTS See Part 1.

Properties	Test Procedure, See Part 3, Paragraph	Requirements
DIMENSIONS	3.2.1.1	See Table T (MW 26-C)
ADHERENCE AND FLEXIBILITY	3.3.1	No cracks visible in the film coating
ELONGATION	3.4	Not less than value in Table S (MW 26-C)
HEAT SHOCK	3.5	No cracks visible in the film coating after conditioning at 175°C
SPRINGBACK	3.7.1	Not greater than value in Table S (MW 26-C)
DIELECTRIC STRENGTH	3.8.3	Not less than value in Table S (MW 26-C)
CONTINUITY	3.9.2 3.9.3	25-44 AWG—The number of discontinuities shall not exceed 15 45-56 AWG—The number of discontinuities shall not exceed 25
SOLDERABILITY	3.13	Covered with continuous film of solder after immersion at 470°C as follows: 25-29 AWG 6 seconds 30-36 AWG 5 seconds 37-46 AWG 4 seconds 47-56 AWG 3 seconds
PERIODIC CONFORMANCE TESTS		
THERMOPLASTIC FLOW	3.50	Median not less than 225°C with heavy film insulated 36 AWG
SOLUBILITY	3.51	A specimen of heavy film insulated 36 AWG immersed in xylene shall not soften sufficiently to expose the bare conductor
DIELECTRIC STRENGTH AT RATED TEMPERATURE	3.52	Heavy film insulated wire shall average not less than 1900 volts for 36 AWG
SCRAPE RESISTANCE	3.59	Lowest "grams-to-fail" load for any one of the three tests and the average of the three tests shall be not less than the values in Table S (MW 26-C)

Copyright National Electrical Manufacturers Association
Provided by IHS under license with NEMA
No reproduction or networking permitted without license from IHS

Not for Resale

Table S (MW 26-C)
POLYESTER (IMIDE), SINGLE FILM INSULATED ROUND COPPER MAGNET WIRE FOR SOLDERABLE APPLICATIONS THERMAL CLASS 155

AWG Size	Bare Wire Diameter Inches † Minimum	Bare Wire Diameter Inches † Nominal	Bare Wire Diameter Inches † Maximum	Insulation † Minimum Increase in Diameter, Inches	Insulation † Maximum Overall Diameter Inches	Elongation, Minimum Percent	Scrape, Grams to Fail Average	Scrape, Grams to Fail Minimum	Springback, Maximum Degrees per Turn	Dielectric Strength, Minimum Breakdown Volts	AWG Size
25	0.0177	0.0179	0.0180*	0.0009	0.0194	28	350	300	72	2625	25
26	0.0157	0.0159	0.0160*	0.0009	0.0173	27	335	285	76	2550	26
27	0.0141	0.0142	0.0143	0.0008	0.0156	27	310	265	50	2500	27
28	0.0125	0.0126	0.0127	0.0008	0.0140	26	295	250	55	2425	28
29	0.0112	0.0113	0.0114	0.0007	0.0126	26	275	235	61	2375	29
30	0.0099	0.0100	0.0101	0.0007	0.0112	25	260	220	66	2300	30
31	0.0088	0.0089	0.0090	0.0006	0.0100	24	...	...	...	2075	31
32	0.0079	0.0080	0.0081	0.0006	0.0091	24	...	...	...	1850	32
33	0.0070	0.0071	0.0072	0.0005	0.0081	23	...	...	...	1675	33
34	0.0062	0.0063	0.0064	0.0005	0.0072	22	...	...	...	1500	34
35	0.0055	0.0056	0.0057	0.0004	0.0064	21	...	...	...	1325	35
36	0.0049	0.0050	0.0051	0.0004	0.0058	20	...	...	...	1200	36
37	0.0044	0.0045	0.0046	0.0003	0.0052	20	...	...	...	1075	37
38	0.0039	0.0040	0.0041	0.0003	0.0047	19	...	...	...	950	38
39	0.0034	0.0035	0.0036	0.0002	0.0041	18	...	...	...	850	39
40	0.0030	0.0031	0.0032	0.0002	0.0037	17	...	...	...	775	40
41	0.0027	0.0028	0.0029	0.0002	0.0033	17	...	...	...	700	41
42	0.0024	0.0025	0.0026	0.0002	0.0030	16	...	...	...	625	42
43	0.0021	0.0022	0.0023	0.0002	0.0026	15	...	...	...	550	43
44	0.0019	0.0020	0.0021	0.0001	0.0024	14	...	...	...	500	44
	Conductor Resistance at 20°C Ohms per Foot †, †† Minimum	Conductor Resistance at 20°C Ohms per Foot †, †† Nominal	Conductor Resistance at 20°C Ohms per Foot †, †† Maximum				Theoretical Nominal Bare Wire Diameter, Inches †, ††				
45	3.080	3.348	3.616	0.00010	0.00205	11	0.00176				45
46	3.870	4.207	4.544	0.00010	0.00185	10	0.00157				46
47	4.868	5.291	5.714	0.00010	0.00170	8	0.00140				47
48	6.205	6.745	7.285	0.00010	0.00150	7	0.00124				48
49	7.744	8.417	9.090	0.00010	0.00130	6	0.00111				49
50	9.734	10.58	11.43	0.00010	0.00120	5	0.00099				50
51	12.32	13.39	14.46	0.00010	0.00110	...	0.00088				51
52	15.69	17.05	18.41	0.00010	0.00100	...	0.00078				52
53	19.48	21.17	22.86	0.00005	0.00085	...	0.00070				53
54	24.82	26.98	29.14	0.00005	0.00075	...	0.00062				54
55	31.54	34.28	37.02	0.00005	0.00070	...	0.00055				55
56	39.73	43.19	46.65	0.00005	0.00065	...	0.00049				56

* This maximum bare wire diameter shall be permitted to be exceeded, see 1.6.7.2.
† For metric equivalent, see Table 1-1.
†† Conductor size tolerance based on resistance; see 1.6.7.3.

Copyright National Electrical Manufacturers Association
Provided by IHS under license with NEMA
No reproduction or networking permitted without license from IHS

Not for Resale

MW 26-C (Heavy)
POLYESTER (IMIDE), HEAVY FILM INSULATED ROUND COPPER MAGNET WIRE FOR SOLDERABLE APPLICATIONS THERMAL CLASS 155

INSULATING MATERIALS The coating is based on polyester (imide) resins (1.4.2).

THERMAL CLASS 155°C when tested in accordance with Part 1, para. 1.8 and Part 3, para 3.58.1.

GENERAL REQUIREMENTS See Part 1.

Properties	Test Procedure, See Part 3, Paragraph	Requirements
DIMENSIONS	3.2.1.1	See Table H (MW 26-C)
ADHERENCE AND FLEXIBILITY	3.3.1	No cracks visible in the film coating
ELONGATION	3.4	Not less than value in Table H (MW 26-C)
HEAT SHOCK	3.5	No cracks visible in the film coating after conditioning at 175°C
SPRINGBACK	3.7.1	Not greater than value in Table H (MW 26-C)
DIELECTRIC STRENGTH	3.8.3	Not less than value in Table H (MW 26-C)
CONTINUITY	3.9.2 3.9.3	25-44 AWG—The number of discontinuities shall not exceed 5 45-50 AWG—The number of discontinuities shall not exceed 10
SOLDERABILITY	3.13	Covered with continuous film of solder after immersion at 470°C as follows: 25-29 AWG 6 seconds 30-36 AWG 5 seconds 37-46 AWG 4 seconds 47-50 AWG 3 seconds
PERIODIC CONFORMANCE TESTS		
THERMOPLASTIC FLOW	3.50	Median not less than 225°C with heavy film insulated 36 AWG
SOLUBILITY	3.51	A specimen of heavy film insulated 36 AWG immersed in xylene shall not soften sufficiently to expose the bare conductor
DIELECTRIC SRENGTH AT RATED TEMPERATURE	3.52	Heavy film insulated wire shall average not less than 1900 volts for 36 AWG
SCRAPE RESISTANCE	3.59	Lowest "grams-to-fail" load for any one of the three tests and the average of the three tests shall be not less than the values in Table H (MW 26-C)

Copyright National Electrical Manufacturers Association
Provided by IHS under license with NEMA
No reproduction or networking permitted without license from IHS

Not for Resale

Table H (MW 26-C)
POLYESTER (IMIDE), HEAVY FILM INSULATED ROUND COPPER MAGNET WIRE FOR SOLDERABLE APPLICATIONS THERMAL CLASS 155

AWG Size	Bare Wire Diameter, Inches †			Insulation †		Elongation, Minimum	Scrape, Grams to Fail		Springback, Maximum Degrees	Dielectric Strength, Minimum Breakdown	AWG Size
	Minimum	Nominal	Maximum	Minimum Increase in Diameter, Inches	Maximum Overall Diameter, Inches	Percent	Average	Minimum	per Turn	Volts	
25	0.0177	0.0179	0.0180*	0.0018	0.0203	28	635	540	72	4725	25
26	0.0157	0.0159	0.0160*	0.0017	0.0182	27	595	505	76	4600	26
27	0.0141	0.0142	0.0143	0.0016	0.0164	27	560	475	50	4500	27
28	0.0125	0.0126	0.0127	0.0016	0.0147	26	525	450	55	4375	28
29	0.0112	0.0113	0.0114	0.0015	0.0133	26	495	420	61	4250	29
30	0.0099	0.0100	0.0101	0.0014	0.0119	25	460	395	66	4150	30
31	0.0088	0.0089	0.0090	0.0013	0.0108	24	...	...	...	3825	31
32	0.0079	0.0080	0.0081	0.0012	0.0098	24	...	...	...	3525	32
33	0.0070	0.0071	0.0072	0.0011	0.0088	23	...	...	...	3250	33
34	0.0062	0.0063	0.0064	0.0010	0.0078	22	...	...	...	2975	34
35	0.0055	0.0056	0.0057	0.0009	0.0070	21	...	...	...	2750	35
36	0.0049	0.0050	0.0051	0.0008	0.0063	20	...	...	...	2525	36
37	0.0044	0.0045	0.0046	0.0008	0.0057	20	...	...	...	2325	37
38	0.0039	0.0040	0.0041	0.0007	0.0051	19	...	...	...	2150	38
39	0.0034	0.0035	0.0036	0.0006	0.0045	18	...	...	...	1975	39
40	0.0030	0.0031	0.0032	0.0006	0.0040	17	...	...	...	1800	40
41	0.0027	0.0028	0.0029	0.0005	0.0036	17	...	...	...	1675	41
42	0.0024	0.0025	0.0026	0.0004	0.0032	16	...	...	...	1525	42
43	0.0021	0.0022	0.0023	0.0004	0.0029	15	...	...	...	1400	43
44	0.0019	0.0020	0.0021	0.0004	0.0027	14	...	...	...	1300	44
	Conductor Resistance at 20°C Ohms per Foot †, ††						Theoretical Nominal Bare Wire Diameter, Inches †, ††				
	Minimum	Nominal	Maximum								
45	3.080	3.348	3.616	0.00030	0.00230	11	0.00176				45
46	3.870	4.207	4.544	0.00030	0.00210	10	0.00157				46
47	4.868	5.291	5.714	0.00030	0.00190	8	0.00140				47
48	6.205	6.745	7.285	0.00020	0.00170	7	0.00124				48
49	7.744	8.417	9.090	0.00020	0.00150	6	0.00111				49
50	9.734	10.58	11.43	0.00020	0.00140	5	0.00099				50

* This maximum bare wire diameter shall be permitted to be exceeded; see 1.6.7.2.

† For metric equivalent, see Table 1-2.

†† Conductor size tolerance based on resistance; see 1.6.7.3.

Copyright National Electrical Manufacturers Association
Provided by IHS under license with NEMA
No reproduction or networking permitted without license from IHS

Not for Resale

MW 27-C (Single)
POLYESTER (IMIDE) OVERCOATED WITH POLYAMIDE, SINGLE FILM INSULATED ROUND COPPER MAGNET WIRE FOR SOLDERABLE APPLICATIONS THERMAL CLASS 155

INSULATING MATERIALS The conductor shall be coated with a dual film. The underlying coating is based on polyester (imide) resins (1.4.2). The superimposed coating is based on polyamide resins (1.4.2).

THERMAL CLASS 155°C when tested in accordance with Part 1, para. 1.8 and Part 3, para. 3.58.1

GENERAL REQUIREMENTS See Part 1.

Properties	Test Procedure, See Part 3, Paragraph	Requirements
DIMENSIONS	3.2.1.1	See Table S (MW 27-C)
ADHERENCE AND FLEXIBILITY	3.3.1	No cracks visible in the film coating
ELONGATION	3.4	Not less than value in Table S (MW 27-C)
HEAT SHOCK	3.5	No cracks visible in the film coating after conditioning at 175°C
SPRINGBACK	3.7.1	Not greater than value in Table S (MW 27-C)
DIELECTRIC STRENGTH	3.8.3	Not less than value in Table S (MW 27-C)
CONTINUITY	3.9.2	The number of discontinuities shall not exceed 15
SOLDERABILITY	3.13	Covered with continuous film of solder after immersion at 455°C as follows: 25-29 AWG 6 seconds 30-36 AWG 5 seconds 37-44 AWG 4 seconds
PERIODIC CONFORMANCE TESTS		
THERMOPLASTIC FLOW	3.50	Median not less than 200°C with heavy film insulated 18 or 36 AWG
SOLUBILITY	3.51	A specimen of heavy film insulated 36 AWG immersed in xylene shall not soften sufficiently to expose the bare conductor
DIELECTRIC STRENGTH AT RATED TEMPERATURE	3.52	Heavy film insulated wire shall average not less than 1900 volts for 36 AWG
SCRAPE RESISTANCE	3.59	Lowest "grams-to-fail" load for any one of the three tests and the average of the three tests shall not be less than the values in Table S (MW 27-C)

Copyright National Electrical Manufacturers Association
Provided by IHS under license with NEMA
No reproduction or networking permitted without license from IHS

Not for Resale

Table S (MW 27-C)
POLYESTER (IMIDE) OVERCOATED WITH POLYAMIDE, SINGLE FILM INSULATED ROUND COPPER MAGNET WIRE FOR SOLDERABLE APPLICATIONS THERMAL CLASS 155

AWG Size	Bare Wire Diameter, Inches †			Insulation †		Elongation, Minimum Percent	Scrape, Grams to Fail		Springback, Maximum Degrees per Turn	Dielectric Strength, Minimum Breakdown Volts	AWG Size
	Minimum	Nominal	Maximum	Minimum Increase in Diameter, Inches	Maximum Overall Diameter, Inches		Average	Minimum			
25	0.0177	0.0179	0.0180*	0.0009	0.0194	28	350	300	72	2375	25
26	0.0157	0.0159	0.0160*	0.0009	0.0173	27	335	285	76	2300	26
27	0.0141	0.0142	0.0143	0.0008	0.0156	27	310	265	50	2250	27
28	0.0125	0.0126	0.0127	0.0008	0.0140	26	295	250	55	2175	28
29	0.0112	0.0113	0.0114	0.0007	0.0126	26	275	235	61	2150	29
30	0.0099	0.0100	0.0101	0.0007	0.0112	25	260	220	66	2075	30
31	0.0088	0.0089	0.0090	0.0006	0.0100	24	...	...	...	1875	31
32	0.0079	0.0080	0.0081	0.0006	0.0091	24	...	...	...	1675	32
33	0.0070	0.0071	0.0072	0.0005	0.0081	23	...	...	...	1500	33
34	0.0062	0.0063	0.0064	0.0005	0.0072	22	...	...	...	1350	34
35	0.0055	0.0056	0.0057	0.0004	0.0064	21	...	...	...	1200	35
36	0.0049	0.0050	0.0051	0.0004	0.0058	20	...	...	...	1075	36
37	0.0044	0.0045	0.0046	0.0003	0.0052	20	...	...	...	975	37
38	0.0039	0.0040	0.0041	0.0003	0.0047	19	...	...	...	850	38
39	0.0034	0.0035	0.0036	0.0002	0.0041	18	...	...	...	775	39
40	0.0030	0.0031	0.0032	0.0002	0.0037	17	...	...	...	700	40
41	0.0027	0.0028	0.0029	0.0002	0.0033	17	...	...	...	625	41
42	0.0024	0.0025	0.0026	0.0002	0.0030	16	...	...	...	575	42
43	0.0021	0.0022	0.0023	0.0002	0.0026	15	...	...	...	500	43
44	0.0019	0.0020	0.0021	0.0001	0.0024	14	...	...	...	450	44

*This maximum bare wire diameter shall be permitted to be exceeded; see 1.6.7.2.
†For metric equivalent, see Table 1-1.

Copyright National Electrical Manufacturers Association
Provided by IHS under license with NEMA
No reproduction or networking permitted without license from IHS

Not for Resale

MW 27-C (Heavy)
POLYESTER (IMIDE) OVERCOATED WITH POLYAMIDE, HEAVY FILM INSULATED ROUND COPPER MAGNET WIRE FOR SOLDERABLE APPLICATIONS THERMAL CLASS 155

INSULATING MATERIALS The conductor shall be coated with a dual film. The underlying coating is based on polyester (imide) resins (1.4.2). The superimposed coating is based on polyamide resins (1.4.2).

THERMAL CLASS 155°C when tested in accordance with Part 1, para. 1.8 and Part 3, para. 3.58.1

GENERAL REQUIREMENTS See Part 1.

Properties	Test Procedure, See Part 3, Paragraph	Requirements
DIMENSIONS	3.2.1.1	See Table H (MW 27-C)
ADHERENCE AND FLEXIBILITY	3.3.1	No cracks visible in the film coating
ELONGATION	3.4	Not less than value in Table H (MW 27-C)
HEAT SHOCK	3.5	No cracks visible in the film coating after conditioning at 175°C
SPRINGBACK	3.7.1	Not greater than value in Table H (MW 27-C)
DIELECTRIC STRENGTH	3.8.3	Not less than value in Table H (MW 27-C)
CONTINUITY	3.9.2	The number of discontinuities shall not exceed 5
SOLDERABILITY	3.13	Covered with continuous film of solder after immersion at 455°C as follows: 25-29 AWG 6 seconds 30-36 AWG 5 seconds 37-44 AWG 4 seconds
PERIODIC CONFORMANCE TESTS		
THERMOPLASTIC FLOW	3.50	Median not less than 200°C with heavy film insulated 36 AWG
SOLUBILITY	3.51	A specimen of heavy film insulated 36 AWG immersed in xylene shall not soften sufficiently to expose the bare conductor
DIELECTRIC STRENGTH AT RATED TEMPERATURE	3.52	Heavy film insulated wire shall average not less than 1900 volts for 36 AWG
SCRAPE RESISTANCE	3.59	Lowest "grams-to-fail" load for any one of the three tests and the average of the three tests shall not be less than the values in Table H (MW 27-C)

Copyright National Electrical Manufacturers Association
Provided by IHS under license with NEMA
No reproduction or networking permitted without license from IHS

Not for Resale

Table H (MW 27-C)
POLYESTER (IMIDE) OVERCOATED WITH POLYAMIDE, HEAVY FILM INSULATED ROUND COPPER MAGNET WIRE FOR SOLDERABLE APPLICATIONS THERMAL CLASS 155

AWG Size	Bare Wire Diameter, Inches †			Insulation †		Elongation, Minimum Percent	Scrape, Grams to Fail		Springback, Maximum Degrees per Turn	Dielectric Strength, Minimum Breakdown Volts	AWG Size
	Minimum	Nominal	Maximum	Minimum Increase in Diameter, Inches	Maximum Overall Diameter, Inches		Average	Minimum			
25	0.0177	0.0179	0.0180*	0.0018	0.0203	28	635	540	72	4250	25
26	0.0157	0.0159	0.0160*	0.0017	0.0182	27	595	505	76	4150	26
27	0.0141	0.0142	0.0143	0.0016	0.0164	27	560	475	50	4050	27
28	0.0125	0.0126	0.0127	0.0016	0.0147	26	525	450	55	3950	28
29	0.0112	0.0113	0.0114	0.0015	0.0133	26	495	420	61	3825	29
30	0.0099	0.0100	0.0101	0.0014	0.0119	25	460	395	66	3725	30
31	0.0088	0.0089	0.0090	0.0013	0.0108	24	...	...	...	3450	31
32	0.0079	0.0080	0.0081	0.0012	0.0098	24	...	...	...	3175	32
33	0.0070	0.0071	0.0072	0.0011	0.0088	23	...	...	...	2925	33
34	0.0062	0.0063	0.0064	0.0010	0.0078	22	...	...	...	2675	34
35	0.0055	0.0056	0.0057	0.0009	0.0070	21	...	...	...	2475	35
36	0.0049	0.0050	0.0051	0.0008	0.0063	20	...	...	...	2275	36
37	0.0044	0.0045	0.0046	0.0008	0.0057	20	...	...	...	2100	37
38	0.0039	0.0040	0.0041	0.0007	0.0051	19	...	...	...	1925	38
39	0.0034	0.0035	0.0036	0.0006	0.0045	18	...	...	...	1775	39
40	0.0030	0.0031	0.0032	0.0006	0.0040	17	...	...	...	1625	40
41	0.0027	0.0028	0.0029	0.0005	0.0036	17	...	...	...	1500	41
42	0.0024	0.0025	0.0026	0.0004	0.0032	16	...	...	...	1375	42
43	0.0021	0.0022	0.0023	0.0004	0.0029	15	...	...	...	1250	43
44	0.0019	0.0020	0.0021	0.0004	0.0027	14	...	...	...	1175	44

*This maximum bare wire diameter shall be permitted to be exceeded; see 1.6.7.2.
†For metric equivalent, see Table 1-2.

Copyright National Electrical Manufacturers Association
Provided by IHS under license with NEMA
No reproduction or networking permitted without license from IHS

Not for Resale

MW 28-A (Single)
POLYURETHANE OVERCOATED WITH POLYAMIDE, SINGLE FILM INSULATED ROUND ALUMINUM MAGNET WIRE FOR SOLDERABLE APPLICATIONS THERMAL CLASS 130

INSULATING MATERIALS The conductor shall be coated with a dual film. The underlying coating is based on polyurethane resins (1.4.2). The superimposed coating is based on polyamide resins (1.4.2).

THERMAL CLASS 130°C when tested in accordance with Part 1, para. 1.8 and Part 3, para. 3.58.1

GENERAL REQUIREMENTS See Part 1.

Properties	Test Procedure, See Part 3, Paragraph	Requirements
DIMENSIONS	3.2.1.1	See Table S (MW 28-A)
ADHERENCE AND FLEXIBILITY	3.3.1	No cracks visible in the film insulation
ELONGATION	3.4	Not less than value in Table S (MW 28-A)
HEAT SHOCK	3.5	No cracks visible in the film coating after conditioning at 175°C
DIELECTRIC STRENGTH	3.8.3	Not less than value in Table S (MW 28-A)
CONTINUITY	3.9.2	The number of discontinuities shall not exceed 25
SOLDERABILITY	3.13	Insulation completely removed after immersion as follows: 14-19 AWG 10 seconds at 430°C 20-23 AWG 8 seconds at 430°C 24-30 AWG 6 seconds at 390°C
PERIODIC CONFORMANCE TESTS		
THERMOPLASTIC FLOW	3.50	Median not less than 170°C with heavy film insulated 18 AWG
SOLUBILITY	3.51	A specimen of heavy film insulated 18 AWG immersed in xylene shall not soften sufficiently to expose the bare conductor
DIELECTRIC STRENGTH AT RATED TEMPERATURE	3.52	Heavy film insulated wire shall average not less than 3825 volts for 18 AWG
SCRAPE RESISTANCE	3.59	Lowest "grams-to-fail" load for any one of the three tests and the average of the three tests shall not be less than the values in Table S (MW 28-A)

Copyright National Electrical Manufacturers Association
Provided by IHS under license with NEMA
No reproduction or networking permitted without license from IHS
Not for Resale

Table S (MW 28-A)
POLYURETHANE OVERCOATED WITH POLYAMIDE, SINGLE FILM INSULATED ROUND ALUMINUM MAGNET WIRE FOR SOLDERABLE APPLICATIONS THERMAL CLASS 130

AWG Size	Bare Wire Diameter, Inches †			Insulation †		Elongation, Minimum Percent	Scrape, Grams to Fail		Dielectric Strength, Minimum Breakdown Volts	AWG Size
	Minimum	Nominal	Maximum	Minimum Increase in Diameter, Inches	Maximum Increase in Diameter, Inches		Average	Minimum		
14	0.0635	0.0641	0.0644*	0.0016	0.0666	15	505	430	3175	14
15	0.0565	0.0571	0.0574*	0.0015	0.0594	15	470	400	3075	15
16	0.0503	0.0508	0.0511*	0.0014	0.0531	15	440	375	3000	16
17	0.0448	0.0453	0.0455*	0.0014	0.0475	15	415	350	2925	17
18	0.0399	0.0403	0.0405*	0.0013	0.0424	15	390	330	2850	18
19	0.0355	0.0359	0.0361*	0.0012	0.0379	15	360	305	2775	19
20	0.0317	0.0320	0.0322*	0.0012	0.0339	14	335	285	2700	20
21	0.0282	0.0285	0.0286*	0.0011	0.0303	14	315	265	2625	21
22	0.0250	0.0253	0.0254*	0.0011	0.0270	14	295	250	2575	22
23	0.0224	0.0226	0.0227*	0.0010	0.0243	14	275	235	2500	23
24	0.0199	0.0201	0.0202*	0.0010	0.0217	13	260	220	2425	24
25	0.0177	0.0179	0.0180*	0.0009	0.0194	12	250	210	2375	25
26	0.0157	0.0159	0.0160*	0.0009	0.0173	12	240	200	2300	26
27	0.0141	0.0142	0.0143	0.0008	0.0156	12	230	190	2250	27
28	0.0125	0.0126	0.0127	0.0008	0.0140	12	220	180	2175	28
29	0.0112	0.0113	0.0114	0.0007	0.0126	11	210	175	2150	29
30	0.0099	0.0100	0.0101	0.0007	0.0112	11	200	170	2075	30

*This maximum bare wire diameter shall be permitted to be exceeded; see 1.6.7.2.
†For metric equivalent, see Table 1-1.

Copyright National Electrical Manufacturers Association
Provided by IHS under license with NEMA
No reproduction or networking permitted without license from IHS
Not for Resale

MW 28-A (Heavy)
POLYURETHANE OVERCOATED WITH POLYAMIDE, HEAVY
FILM INSULATED ROUND ALUMINUM MAGNET WIRE FOR SOLDERABLE APPLICATIONS
THERMAL CLASS 130

INSULATING MATERIALS The conductor shall be coated with a dual film. The underlying coating is based on polyurethane resins (1.4.2). The superimposed coating is based on polyamide resins (1.4.2).

THERMAL CLASS 130°C when tested in accordance with Part 1, para. 1.8 and Part 3, para. 3.58.1

GENERAL REQUIREMENTS See Part 1.

Characteristics	Test Procedure, See Part 3, Paragraph	Requirements
DIMENSIONS	3.2.1.1	See Table H (MW 28-A)
ADHERENCE AND FLEXIBILITY	3.3.1	No cracks visible in the film coating
ELONGATION	3.4	Not less than value in Table H (MW 28-A)
HEAT SHOCK	3.5	No cracks visible in the film coating after conditioning at 175°C
DIELECTRIC STRENGTH	3.8.3	Not less than value in Table H (MW 28-A)
CONTINUITY	3.9.2	The number of discontinuities shall not exceed 10
SOLDERABILITY	3.13	Covered with continuous film of solder, or insulation completely removed after immersion as follows: 14-19 AWG 10 seconds at 430°C 20-23 AWG 8 seconds at 430°C 24-30 AWG 6 seconds at 390°C
PERIODIC CONFORMANCE TESTS		
THERMOPLASTIC FLOW	3.50	Median not less than 170°C with heavy film insulated 18 AWG
SOLUBILITY	3.51	A specimen of heavy film insulated 18 AWG immersed in xylene shall not soften sufficiently to expose the bare conductor
DIELECTRIC STRENGTH AT RATED TEMPERATURE	3.52	Heavy film insulated wire shall average not less than 3825 volts for 18 AWG
SCRAPE RESISTANCE	3.59	Lowest "grams-to-fail" load for any one of the three tests and the average of the three tests shall not be less than the values in Table H (MW 28-A)

Copyright National Electrical Manufacturers Association
Provided by IHS under license with NEMA
No reproduction or networking permitted without license from IHS

Not for Resale

Table H (MW 28-A)
POLYURETHANE OVERCOATED WITH POLYAMIDE, SINGLE FILM INSULATED ROUND ALUMINUM MAGNET WIRE FOR SOLDERABLE APPLICATIONS THERMAL CLASS 130

AWG Size	Bare Wire Diameter, In Inches †			Insulation †		Elongation, Minimum Percent	Scrape, Grams to Fail		Dielectric Strength, Minimum Breakdown Volts	AWG Size
	Minimum	Nominal	Maximum	Minimum Increase in Diameter, Inches	Maximum Increase in Diameter, Inches		Average	Minimum		
14	0.0635	0.0641	0.0644*	0.0032	0.0682	15	895	760	5700	14
15	0.0565	0.0571	0.0574*	0.0030	0.0609	15	840	715	5550	15
16	0.0503	0.0508	0.0511*	0.0029	0.0545	15	785	670	5400	16
17	0.0448	0.0453	0.0455*	0.0028	0.0488	15	740	625	5275	17
18	0.0399	0.0403	0.0405*	0.0026	0.0437	15	690	590	5125	18
19	0.0355	0.0359	0.0361*	0.0025	0.0391	15	640	545	5000	19
20	0.0317	0.0320	0.0322*	0.0023	0.0351	14	600	510	4850	20
21	0.0282	0.0285	0.0286*	0.0022	0.0314	14	565	480	4725	21
22	0.0250	0.0253	0.0254*	0.0021	0.0281	14	530	450	4625	22
23	0.0224	0.0226	0.0227*	0.0020	0.0253	14	490	420	4500	23
24	0.0199	0.0201	0.0202*	0.0019	0.0227	13	460	395	4375	24
25	0.0177	0.0179	0.0180*	0.0018	0.0200	12	430	370	4250	25
26	0.0157	0.0159	0.0160*	0.0017	0.0182	12	410	350	4150	26
27	0.0141	0.0142	0.0143	0.0016	0.0164	12	390	330	4050	27
28	0.0125	0.0126	0.0127	0.0016	0.0147	12	370	310	3950	28
29	0.0112	0.0113	0.0114	0.0015	0.0133	11	350	300	3825	29
30	0.0099	0.0100	0.0101	0.0015	0.0119	11	330	290	3725	30

*This maximum bare wire diameter shall be permitted to be exceeded; see 1.6.7.2.
†For metric equivalent, see Table 1-2.

Copyright National Electrical Manufacturers Association
Provided by IHS under license with NEMA
No reproduction or networking permitted without license from IHS

Not for Resale

MW 28-C (Single)
POLYURETHANE OVERCOATED WITH POLYAMIDE, SINGLE FILM INSULATED ROUND COPPER MAGNET WIRE FOR SOLDERABLE APPLICATIONS THERMAL CLASS 130

INSULATING MATERIALS The conductor shall be coated with a dual film. The underlying coating is based on polyurethane resins (1.4.2). The superimposed coating is based on polyamide resins (1.4.2).

THERMAL CLASS 130°C when tested in accordance with Part 1, para. 1.8 and Part 3, para. 3.58.

GENERAL REQUIREMENTS See Part 1.

Properties	Test Procedure, See Part 3, Paragraph	Requirements
DIMENSIONS	3.2.1.1	See Table S (MW 28-C)
ADHERENCE AND FLEXIBILITY	3.3.1	No cracks visible in the film coating
ELONGATION	3.4	Not less than value in Table S (MW 28-C)
HEAT SHOCK	3.5	No cracks visible in the film coating after conditioning at 175°C
SPRINGBACK	3.7.1	Not greater than value in Table S (MW 28-C)
DIELECTRIC STRENGTH	3.8.3	Not less than value in Table S (MW 28-C)
CONTINUITY	3.9.2	The number of discontinuities shall not exceed 15
SOLDERABILITY	3.13	Covered with continuous film of solder after immersion as follows: 14-19 AWG 10 seconds at 430°C 20-23 AWG 8 seconds at 430°C 24-29 AWG 6 seconds at 360°C 30-36 AWG 5 seconds at 360°C 37-44 AWG 4 seconds at 360°C
PERIODIC CONFORMANCE TESTS		
THERMOPLASTIC FLOW	3.50	Median not less than 170°C with heavy film insulated 18 or 36 AWG
SOLUBILITY	3.51	A specimen of heavy film insulated 18 or 36 AWG immersed in xylene shall not soften sufficiently to expose the bare conductor
DIELECTRIC STRENGTH AT RATED TEMPERATURE	3.52	Heavy film insulated wire shall average not less than 3825 volts for 18 AWG or 1725 volts for 36 AWG
SCRAPE RESISTANCE	3.59	Lowest "grams-to-fail" load for any one of the three tests and the average of the three tests shall not be less than the values in Table S (MW 28-C)

Copyright National Electrical Manufacturers Association
Provided by IHS under license with NEMA
No reproduction or networking permitted without license from IHS

Not for Resale

Table S (MW 28-C)
POLYURETHANE OVERCOATED WITH POLYAMIDE, SINGLE FILM INSULATED ROUND COPPER MAGNET WIRE FOR SOLDERABLE APPLICATIONS THERMAL CLASS 130

AWG Size	Bare Wire Diameter, Inches †			Insulation †		Elongation, Minimum	Scrape, Grams to Fail		Springback, Maximum Degrees	Dielectric Strength, Minimum Breakdown	AWG Size
	Minimum	Nominal	Maximum	Minimum Increase in Diameter, Inches	Maximum Overall Diameter, Inches	Percent	Average	Minimum	per Turn	Volts	
14	0.0635	0.0641	0.0644*	0.0016	0.0666	33	840	715	42	3175	14
15	0.0565	0.0571	0.0574*	0.0015	0.0594	33	780	665	46	3075	15
16	0.0503	0.0508	0.0511*	0.0014	0.0531	33	735	625	50	3000	16
17	0.0448	0.0453	0.0455*	0.0014	0.0475	32	690	585	54	2925	17
18	0.0399	0.0403	0.0405*	0.0013	0.0424	32	645	550	58	2850	18
19	0.0355	0.0359	0.0361*	0.0012	0.0379	31	600	510	62	2775	19
20	0.0317	0.0320	0.0322*	0.0012	0.0339	30	560	475	66	2700	20
21	0.0282	0.0285	0.0286*	0.0011	0.0303	30	525	445	53	2625	21
22	0.0250	0.0253	0.0254*	0.0011	0.0270	29	490	415	58	2575	22
23	0.0224	0.0226	0.0227*	0.0010	0.0243	29	460	390	62	2500	23
24	0.0199	0.0201	0.0202*	0.0010	0.0217	28	430	365	67	2425	24
25	0.0177	0.0179	0.0180*	0.0009	0.0194	28	400	340	72	2375	25
26	0.0157	0.0159	0.0160*	0.0009	0.0173	27	380	325	76	2300	26
27	0.0141	0.0142	0.0143	0.0008	0.0156	27	355	300	50	2250	27
28	0.0125	0.0126	0.0127	0.0008	0.0140	26	335	285	55	2175	28
29	0.0112	0.0113	0.0114	0.0007	0.0126	26	310	265	61	2150	29
30	0.0099	0.0100	0.0101	0.0007	0.0112	25	295	250	66	2075	30
31	0.0088	0.0089	0.0090	0.0006	0.0100	24	...	...	...	1875	31
32	0.0079	0.0080	0.0081	0.0006	0.0091	24	...	...	...	1675	32
33	0.0070	0.0071	0.0072	0.0005	0.0081	23	...	...	...	1500	33
34	0.0062	0.0063	0.0064	0.0005	0.0072	22	...	...	...	1350	34
35	0.0055	0.0056	0.0057	0.0004	0.0064	21	...	...	...	1200	35
36	0.0049	0.0050	0.0051	0.0004	0.0058	20	...	...	...	1075	36
37	0.0044	0.0045	0.0046	0.0003	0.0052	20	...	...	...	975	37
38	0.0039	0.0040	0.0041	0.0003	0.0047	19	...	...	...	850	38
39	0.0034	0.0035	0.0036	0.0002	0.0041	18	...	...	...	775	39
40	0.0030	0.0031	0.0032	0.0002	0.0037	17	...	...	...	700	40
41	0.0027	0.0028	0.0029	0.0002	0.0033	17	...	...	...	625	41
42	0.0024	0.0025	0.0026	0.0002	0.0030	16	...	...	...	575	42
43	0.0021	0.0022	0.0023	0.0002	0.0026	15	...	...	...	500	43
44	0.0019	0.0020	0.0021	0.0001	0.0024	14	...	...	...	450	44

*This maximum bare wire diameter shall be permitted to be exceeded; see 1.6.7.2.
†For metric equivalent, see Table 1-1.

Copyright National Electrical Manufacturers Association
Provided by IHS under license with NEMA
No reproduction or networking permitted without license from IHS

Not for Resale

MW 28-C (Heavy)
POLYURETHANE OVERCOATED WITH POLYAMIDE, HEAVY
FILM INSULATED ROUND COPPER MAGNET WIRE FOR SOLDERABLE APPLICATIONS
THERMAL CLASS 130

INSULATING MATERIALS The conductor shall be coated with a dual film. The underlying coating is based on polyurethane resins (1.4.2). The superimposed coating is based on polyamide resins (1.4.2).

THERMAL CLASS 130°C when tested in accordance with Part 1, para. 1.8 and Part 3, para. 3.58.

GENERAL REQUIREMENTS See Part 1.

Properties	Test Procedure, See Part 3, Paragraph	Requirements
DIMENSIONS	3.2.1.1	See Table H (MW 28-C)
ADHERENCE AND FLEXIBILITY	3.3.1	No cracks visible in the film coating
ELONGATION	3.4	Not less than value in Table H (MW 28-C)
HEAT SHOCK	3.5	No cracks visible in the film coating after conditioning at 175°C
SPRINGBACK	3.7.1 3.7.2	14–30 AWG—not greater than value in Table H (MW 28-C) Larger than 14 AWG—not greater than 5°
DIELECTRIC STRENGTH	3.8.2	9 AWG—not less than value in Table H (MW 28-C) 10-44 AWG—not less than value in Table H (MW 28-C)
CONTINUITY	3.9.2	14-44 AWG—The number of discontinuities shall not exceed 5
SOLDERABILITY	3.13	Covered with continuous film of solder after immersion as follows: 14-19 AWG 10 seconds at 430°C 20-23 AWG 8 seconds at 430°C 24-29 AWG 6 seconds at 360°C 30-36 AWG 5 seconds at 360°C 37-44 AWG 4 seconds at 360°C
PERIODIC CONFORMANCE TESTS		
THERMOPLASTIC FLOW	3.50	Median not less than 170°C with heavy film insulated 18 or 36 AWG
SOLUBILITY	3.51	A specimen of heavy film insulated 18 or 36 AWG immersed in xylene shall not soften sufficiently to expose the bare conductor
DIELECTRIC STRENGTH AT RATED TEMPERATURE	3.52	Heavy film insulated wire shall average not less than 3825 volts for 18 AWG or 1725 volts for 36 AWG
SCRAPE RESISTANCE	3.59	Lowest "grams-to-fail" load for any one of the three tests and the average of the three tests shall not be less than the values in Table H (MW 28-C)

Copyright National Electrical Manufacturers Association
Provided by IHS under license with NEMA
No reproduction or networking permitted without license from IHS
Not for Resale

Table H (MW 28-C)
POLYURETHANE OVERCOATED WITH POLYAMIDE, HEAVY FILM INSULATED ROUND COPPER MAGNET WIRE FOR SOLDERABLE APPLICATIONS THERMAL CLASS 130

AWG Size	Bare Wire Diameter, Inches †			Insulation †		Elongation, Minimum Percent	Scrape, Grams to Fail		Springback, Minimum Degrees per Turn	Dielectric Strength, Minimum Breakdown Volts	AWG Size
	Minimum	Nominal	Maximum	Minimum Increase in Diameter, Inches	Maximum Overall Diameter, Inches		Average	Minimum			
9	0.1133	0.1144	0.1150*	0.0032	0.1189	36	...	...	...	2875	9
10	0.1009	0.1019	0.1024*	0.0031	0.1061	35	1490	1270	...	5575	10
11	0.0898	0.0907	0.0912*	0.0030	0.0948	35	1490	1270	...	5400	11
12	0.0800	0.0808	0.0812*	0.0029	0.0847	34	1490	1270	...	5225	12
13	0.0713	0.0720	0.0724*	0.0028	0.0757	34	1490	1270	...	5050	13
14	0.0635	0.0641	0.0644*	0.0032	0.0682	33	1490	1270	...	5700	14
15	0.0565	0.0571	0.0574*	0.0030	0.0609	33	1400	1190	46	5550	15
16	0.0503	0.0508	0.0511*	0.0029	0.0545	33	1310	1115	50	5400	16
17	0.0448	0.0453	0.0455*	0.0028	0.0488	32	1230	1045	54	5275	17
18	0.0399	0.0403	0.0405*	0.0026	0.0437	32	1150	980	58	5125	18
19	0.0355	0.0359	0.0361*	0.0025	0.0391	31	1070	910	62	5000	19
20	0.0317	0.0320	0.0322*	0.0023	0.0351	30	1000	850	66	4850	20
21	0.0282	0.0285	0.0286*	0.0022	0.0314	30	940	800	53	4725	21
22	0.0250	0.0253	0.0254*	0.0021	0.0281	29	880	750	58	4625	22
23	0.0224	0.0226	0.0227*	0.0020	0.0253	29	820	700	62	4500	23
24	0.0199	0.0201	0.0202*	0.0019	0.0227	28	770	655	67	4375	24
25	0.0177	0.0179	0.0180*	0.0018	0.0203	28	720	615	72	4250	25
26	0.0157	0.0159	0.0160*	0.0017	0.0182	27	675	575	76	4150	26
27	0.0141	0.0142	0.0143	0.0016	0.0164	27	635	540	50	4050	27
28	0.0125	0.0126	0.0127	0.0016	0.0147	26	595	510	55	3950	28
29	0.0112	0.0113	0.0114	0.0015	0.0133	26	560	480	61	3825	29
30	0.0099	0.0100	0.0101	0.0014	0.0119	25	525	450	66	3725	30
31	0.0088	0.0089	0.0090	0.0013	0.0108	24	...	...	...	3450	31
32	0.0079	0.0080	0.0081	0.0012	0.0098	24	...	...	...	3175	32
33	0.0070	0.0071	0.0072	0.0011	0.0088	23	...	...	...	2925	33
34	0.0062	0.0063	0.0064	0.0010	0.0078	22	...	...	...	2675	34
35	0.0055	0.0056	0.0057	0.0009	0.0070	21	...	...	...	2475	35
36	0.0049	0.0050	0.0051	0.0008	0.0063	20	...	...	...	2275	36
37	0.0044	0.0045	0.0046	0.0008	0.0057	20	...	...	...	2100	37
38	0.0039	0.0040	0.0041	0.0007	0.0051	19	...	...	...	1925	38
39	0.0034	0.0035	0.0036	0.0006	0.0045	18	...	...	...	1775	39
40	0.0030	0.0031	0.0032	0.0006	0.0040	17	...	...	...	1625	40
41	0.0027	0.0028	0.0029	0.0005	0.0036	17	...	...	...	1500	41
42	0.0024	0.0025	0.0026	0.0004	0.0032	16	...	...	...	1375	42
43	0.0021	0.0022	0.0023	0.0004	0.0029	15	...	...	...	1250	43
44	0.0019	0.0020	0.0021	0.0004	0.0027	14	...	...	...	1175	44

*This maximum bare wire diameter shall be permitted to be exceeded; see 1.6.7.2.
†For metric equivalent, see Table 1-2.

Copyright National Electrical Manufacturers Association
Provided by IHS under license with NEMA
No reproduction or networking permitted without license from IHS

Not for Resale

MW 29-C (Type 1)
POLYURETHANE OVERCOATED WITH POLYAMIDE AND SELF-BONDING OVERCOAT, TYPE 1 FILM INSULATED ROUND COPPER MAGNET WIRE FOR SOLDERABLE APPLICATIONS THERMAL CLASS 105

INSULATING MATERIALS The conductor shall be coated with a multiple film. The underlying coating is based on polyurethane resins (1.4.2). The intermediate coating is based on polyamide resins (1.4.2). The superimposed outer coating is based on thermoplastic polyvinyl acetal resins (1.4.2).

THERMAL CLASS 105°C when tested in accordance with Part 1, para. 1.8 and Part 3, para. 3.58.

GENERAL REQUIREMENTS See Part 1.

Properties	Test Procedure, See Part 3, Paragraph	Requirements
DIMENSIONS	3.2.1.2	See Table T1 (MW 29-C)
ADHERENCE AND FLEXIBILITY	3.3.1	No cracks visible in the film coating
ELONGATION	3.4	Not less than value in Table T1 (MW 29-C)
HEAT SHOCK	3.5	No cracks visible in the film coating after conditioning at 175°C
SPRINGBACK	3.7.1	Not greater than value in Table T1 (MW 29-C)
DIELECTRIC STRENGTH	3.8.3	Not less than value in Table T1 (MW 29-C)
CONTINUITY	3.9.2	The number of discontinuities shall not exceed 15
SOLDERABILITY	3.13	Covered with continuous film of solder after immersion as follows: 14-19 AWG 10 seconds at 430°C 20-23 AWG 8 seconds at 430°C 24-29 AWG 6 seconds at 360°C 30-36 AWG 5 seconds at 360°C 37-44 AWG 4 seconds at 360°C
PERIODIC CONFORMANCE TESTS		
THERMOPLASTIC FLOW	3.50	Median not less than 175°C with Type 2 film insulated 18 or 36 AWG
SOLUBILITY	3.51	A specimen of Type 2 film insulated 18 or 36 AWG immersed in xylene shall not soften sufficiently to expose the bare conductor
DIELECTRIC STRENGTH AT RATED TEMPERATURE	3.52	Type 2 film insulated wire shall average not less than 3825 volts for 18 AWG or 1925 volts for 36 AWG
BOND-ROOM TEMPERATURE	3.57	Specimens of 18, 26 and 36 AWG Type 2, no separation of turns

Copyright National Electrical Manufacturers Association
Provided by IHS under license with NEMA
No reproduction or networking permitted without license from IHS

Not for Resale

Table T1 (MW 29-C)
POLYURETHANE OVERCOATED WITH POLYAMIDE AND SELF-BONDING OVERCOAT, TYPE 1 FILM INSULATED ROUND COPPER MAGNET WIRE FOR SOLDERABLE APPLICATIONS THERMAL CLASS 105

AWG Size	Bare Wire Diameter Inches †			Insulation †						AWG Size
				Minimum Increase in Diameter, Inches		Maximum Overall Diameter, Inches	Elongation, Minimum Percent	Springback, Maximum Degrees per Turn	Dielectric Strength, Minimum Breakdown Volts	
	Minimum	Nominal	Maximum	Film Coating	Outer Coating					
14	0.0635	0.0641	0.0644*	0.0016	0.0006	0.0682	33	42	3175	14
15	0.0565	0.0571	0.0574*	0.0015	0.0006	0.0609	33	46	3075	15
16	0.0503	0.0508	0.0511*	0.0014	0.0006	0.0545	33	50	3000	16
17	0.0448	0.0453	0.0455*	0.0014	0.0006	0.0488	32	54	2925	17
18	0.0399	0.0403	0.0405*	0.0013	0.0006	0.0437	32	58	2850	18
19	0.0355	0.0359	0.0361*	0.0012	0.0006	0.0391	31	62	2775	19
20	0.0317	0.0320	0.0322*	0.0012	0.0005	0.0351	30	66	2700	20
21	0.0282	0.0285	0.0286*	0.0011	0.0005	0.0314	30	53	2625	21
22	0.0250	0.0023	0.0254*	0.0011	0.0005	0.0281	29	58	2575	22
23	0.0224	0.0226	0.0227*	0.0010	0.0005	0.0253	29	62	2500	23
24	0.0199	0.0201	0.0202*	0.0010	0.0005	0.0227	28	67	2425	24
25	0.0177	0.0179	0.0180*	0.0009	0.0005	0.0209	28	72	2375	25
26	0.0157	0.0159	0.0160*	0.0009	0.0005	0.0182	27	76	2300	26
27	0.0141	0.0142	0.0143	0.0008	0.0005	0.0164	27	50	2250	27
28	0.0125	0.0126	0.0127	0.0008	0.0005	0.0147	26	55	2175	28
29	0.0112	0.0113	0.0114	0.0007	0.0004	0.0133	26	61	2150	29
30	0.0099	0.0100	0.0101	0.0007	0.0004	0.0119	25	66	2075	30
31	0.0088	0.0089	0.0090	0.0006	0.0004	0.0108	24	...	1875	31
32	0.0079	0.0080	0.0081	0.0006	0.0004	0.0098	24	...	1675	32
33	0.0070	0.0071	0.0072	0.0005	0.0004	0.0088	26	...	1500	33
34	0.0062	0.0063	0.0064	0.0005	0.0003	0.0078	22	...	1350	34
35	0.0055	0.0056	0.0057	0.0004	0.0003	0.0070	21	...	1200	35
36	0.0049	0.0050	0.0051	0.0004	0.0003	0.0063	20	...	1075	36
37	0.0044	0.0045	0.0046	0.0003	0.0003	0.0057	20	...	975	37
38	0.0039	0.0040	0.0041	0.0003	0.0002	0.0051	19	...	850	38
39	0.0034	0.0035	0.0036	0.0002	0.0002	0.0045	18	...	775	39
40	0.0030	0.0031	0.0032	0.0002	0.0002	0.0040	17	...	700	40
41	0.0027	0.0028	0.0029	0.0002	0.0002	0.0036	17	...	625	41
42	0.0024	0.0025	0.0026	0.0002	0.0002	0.0032	16	...	575	42
43	0.0021	0.0022	0.0023	0.0002	0.0001	0.0029	15	...	500	43
44	0.0019	0.0020	0.0021	0.0001	0.0001	0.0027	14	...	450	44

* This maximum bare diameter shall be permitted to be exceeded; see 1.6.7.2.
† For metric equivalents, see Table 1-4.

Copyright National Electrical Manufacturers Association
Provided by IHS under license with NEMA
No reproduction or networking permitted without license from IHS

Not for Resale

MW 29-C (Type 2)
POLYURETHANE OVERCOATED WITH POLYAMIDE AND SELF-BONDING OVERCOAT, TYPE 2 FILM INSULATED ROUND COPPER MAGNET WIRE FOR SOLDERABLE APPLICATIONS THERMAL CLASS 105

INSULATING MATERIALS The conductor shall be coated with a multiple film. The underlying coating is based on polyurethane resins (1.4.2). The intermediate coating is based on polyamide resins (1.4.2). The superimposed outer coating is based on thermoplastic polyvinyl acetal resins (1.4.2).

THERMAL CLASS 105°C when tested in accordance with Part 1, para. 1.8 and Part 3, para. 3.58.

GENERAL REQUIREMENTS See Part 1.

Properties	Test Procedure, See Part 3, Paragraph	Requirements
DIMENSIONS	3.2.1.2	See Table T2 (MW 29-C)
ADHERENCE AND FLEXIBILITY	3.3.1	No cracks visible in the film coating
ELONGATION	3.4	Not less than value in Table T2 (MW 29-C)
HEAT SHOCK	3.5	No cracks visible in the film coating after conditioning at 175°C
SPRINGBACK	3.7.1	Not greater than value in Table T2 (MW 29-C)
DIELECTRIC STRENGTH	3.8.3	Not less than value in Table T2 (MW 29-C)
CONTINUITY	3.9.2	The number of discontinuities shall not exceed 5
SOLDERABILITY	3.13	Covered with continuous film of solder after immersion as follows: 14-19 AWG 10 seconds at 430°C 20-23 AWG 8 seconds at 430°C 24-29 AWG 6 seconds at 360°C 30-36 AWG 5 seconds at 360°C 37-44 AWG 4 seconds at 360°C
PERIODIC CONFORMANCE TESTS		
THERMOPLASTIC FLOW	3.50	Median not less than 175°C with Type 2 film insulated 18 or 36 AWG
SOLUBILITY	3.51	A specimen of Type 2 film insulated 18 or 36 AWG immersed in xylene shall not soften sufficiently to expose the bare conductor
DIELECTRIC STRENGTH AT RATED TEMPERATURE	3.52	Type 2 film insulated wire shall average not less than 3825 volts for 18 AWG or 1725 volts for 36 AWG
BOND-ROOM TEMPERATURE	3.57	Specimens of 18, 26 and 36 AWG Type 2, no separation of turns

Copyright National Electrical Manufacturers Association
Provided by IHS under license with NEMA
No reproduction or networking permitted without license from IHS

Not for Resale

Table T2 (MW 29-C)
POLYURETHANE OVERCOATED WITH POLYAMIDE AND SELF-BONDING OVERCOAT, TYPE 2 FILM INSULATED ROUND COPPER MAGNET WIRE FOR SOLDERABLE APPLICATIONS THERMAL CLASS 105

AWG Size	Bare Wire Diameter, Inches †			Insulation †						AWG Size
				Minimum Increase in Diameter, Inches		Maximum Overall Diameter, Inches	Elongation, Minimum Percent	Springback, Maximum Degrees per Turn	Dielectric Strength, Minimum Breakdown Volts	
	Minimum	Nominal	Maximum	Film Coating	Outer Coating					
14	0.0635	0.0641	0.0644*	0.0032	0.0006	0.0700	33	46	5700	14
15	0.0565	0.0571	0.0574*	0.0030	0.0006	0.0627	33	49	5550	15
16	0.0503	0.0508	0.0511*	0.0029	0.0006	0.0562	33	53	5400	16
17	0.0448	0.0453	0.0455*	0.0028	0.0006	0.0504	32	58	5275	17
18	0.0399	0.0403	0.0405*	0.0026	0.0006	0.0452	32	62	5125	18
19	0.0355	0.0359	0.0361*	0.0025	0.0006	0.0406	31	66	5000	19
20	0.0317	0.0320	0.0322*	0.0023	0.0005	0.0364	30	70	4850	20
21	0.0282	0.0285	0.0286*	0.0022	0.0005	0.0326	30	53	4725	21
22	0.0250	0.0023	0.0254*	0.0021	0.0005	0.0293	29	58	4625	22
23	0.0224	0.0226	0.0227*	0.0020	0.0005	0.0264	29	64	4500	23
24	0.0199	0.0201	0.0202*	0.0019	0.0005	0.0238	28	69	4375	24
25	0.0177	0.0179	0.0180*	0.0048	0.0005	0.0214	28	74	4250	25
26	0.0157	0.0159	0.0160*	0.0017	0.0005	0.0193	27	80	4150	26
27	0.0141	0.0142	0.0143	0.0016	0.0005	0.0173	27	55	4050	27
28	0.0125	0.0126	0.0127	0.0016	0.0005	0.0156	26	60	3950	28
29	0.0112	0.0113	0.0114	0.0015	0.0004	0.0142	26	65	3825	29
30	0.0099	0.0100	0.0101	0.0014	0.0004	0.0128	25	70	3725	30
31	0.0088	0.0089	0.0090	0.0013	0.0004	0.0115	24	...	3450	31
32	0.0079	0.0080	0.0081	0.001	0.0004	0.0105	24	...	3175	32
33	0.0070	0.0071	0.0072	0.0011	0.0004	0.0095	26	...	2925	33
34	0.0062	0.0063	0.0064	0.0010	0.0003	0.0084	22	...	2675	34
35	0.0055	0.0056	0.0057	0.0009	0.0003	0.0076	21	...	2475	35
36	0.0049	0.0050	0.0051	0.0008	0.0003	0.0069	20	...	2275	36
37	0.0044	0.0045	0.0046	0.0008	0.0003	0.0062	20	...	2100	37
38	0.0039	0.0040	0.0041	0.0007	0.0002	0.0056	19	...	1925	38
39	0.0034	0.0035	0.0036	0.0006	0.0002	0.0050	18	...	1775	39
40	0.0030	0.0031	0.0032	0.0006	0.0002	0.0044	17	...	1625	40
41	0.0027	0.0028	0.0029	0.0005	0.0002	0.0040	17	...	1500	41
42	0.0024	0.0025	0.0026	0.0004	0.0002	0.0037	16	...	1375	42
43	0.0021	0.0022	0.0023	0.0004	0.0001	0.0033	15	...	1250	43
44	0.0019	0.0020	0.0021	0.0004	0.0001	0.0030	14	...	1175	44

* This maximum bare wire diameter shall be permitted to be exceeded; see 1.6.7.2.

† For metric equivalent, see Table 1-5.

Copyright National Electrical Manufacturers Association
Provided by IHS under license with NEMA
No reproduction or networking permitted without license from IHS

Not for Resale

MW 30-C (Single)
POLYESTER (AMIDE) (IMIDE), SINGLE FILM INSULATED ROUND COPPER MAGNET WIRE THERMAL CLASS 180

INSULATING MATERIALS The coating is based on polyester (amide)(imide) resins (1.4.2).

THERMAL CLASS 180°C when tested in accordance with Part 1, para. 1.8 and Part 3, para. 3.58.

GENERAL REQUIREMENTS See Part 1.

Properties	Test Procedure, See Part 3, Paragraph	Requirements
DIMENSIONS	3.2.1.1	See Table S (MW 30-C)
ADHERENCE AND FLEXIBILITY	3.3.1	No cracks visible in the film coating
ELONGATION	3.4	Not less than value in Table S (MW 30-C)
HEAT SHOCK	3.5	No cracks visible in the film coating after conditioning at 200°C
SPRINGBACK	3.7.1	Not greater than value in Table S (MW 30-C)
DIELECTRIC STRENGTH	3.8.3	Not less than value in Table S (MW 30-C)
CONTINUITY	3.9.2 3.9.3	14–44 AWG—the number of discontinuities shall not exceed 15 45–56 AWG—the number of discontinuities shall not exceed 25
PERIODIC CONFORMANCE TESTS		
THERMOPLASTIC FLOW	3.50	Median not less than 300°C with heavy film insulated 18 or 36 AWG
SOLUBILITY	3.51	Two specimens of heavy film insulated 18 or 36 AWG immersed in xylene and 50/50 xylene/butyl Cellosolve shall not soften sufficiently to expose the bare conductor
DIELECTRIC STRENGTH AT RATED TEMPERATURE	3.52	Heavy film insulated wire shall average not less than 4275 volts for 18 AWG or 1900 volts with 36 AWG
SCRAPE RESISTANCE	3.59	Lowest "grams-to-fail" load for any one of the three tests and the average of the three tests shall not be less than the values in Table S (MW 30-C)

Copyright National Electrical Manufacturers Association
Provided by IHS under license with NEMA
No reproduction or networking permitted without license from IHS

Not for Resale

Table S (MW 30-C)
POLYESTER (AMIDE) (IMIDE), SINGLE FILM INSULATED ROUND COPPER MAGNET WIRE
THERMAL CLASS 180

AWG Size	Bare Wire Diameter, Inches †			Insulation †		Elongation, Minimum Percent	Scrape, Grams to Fail		Springback, Maxmum Degrees per Turn	Dielectric Strength, Minimum Breakdown Volts	AWG Size
	Minimum	Nominal	Maximum	Minimum Increase in Diameter, Inches	Maximum Overall Diameter, INches		Average	Minimum			
14	0.0635	0.0641	0.0644*	0.0016	0.0666	33	840	715	42	3525	14
15	0.0565	0.0571	0.0574*	0.0015	0.0594	33	780	665	46	3425	15
16	0.0503	0.0508	0.0511*	0.0014	0.0531	33	735	625	50	3325	16
17	0.0448	0.0453	0.0455*	0.0014	0.0475	32	690	585	54	3250	17
18	0.0399	0.0403	0.0405*	0.0013	0.0424	32	645	550	58	3175	18
19	0.0355	0.0359	0.0361*	0.0012	0.0379	31	600	510	62	3075	19
20	0.0317	0.0320	0.0322*	0.0012	0.0339	30	560	475	66	3000	20
21	0.0282	0.0285	0.0286*	0.0011	0.0303	30	525	445	53	2925	21
22	0.0250	0.0253	0.0254*	0.0011	0.0270	29	490	415	58	2850	22
23	0.0224	0.0226	0.0227*	0.0010	0.0243	29	460	390	62	2775	23
24	0.0199	0.0201	0.0202*	0.0010	0.0217	28	430	365	67	2700	24
25	0.0177	0.0179	0.0180*	0.0009	0.0194	28	400	340	72	2625	25
26	0.0157	0.0159	0.0160*	0.0009	0.0173	27	380	325	76	2550	26
27	0.0141	0.0142	0.0143	0.0008	0.0156	27	355	300	50	2500	27
28	0.0125	0.0126	0.0127	0.0008	0.0140	26	335	285	55	2425	28
29	0.0112	0.0113	0.0114	0.0007	0.0126	26	310	265	61	2375	29
30	0.0099	0.0100	0.0101	0.0007	0.0112	25	295	250	66	2300	30
31	0.0088	0.0089	0.0090	0.0006	0.0100	24	...	...	...	2075	31
32	0.0079	0.0080	0.0081	0.0006	0.0091	24	...	...	...	1850	32
33	0.0070	0.0071	0.0072	0.0005	0.0081	23	...	...	...	1675	33
34	0.0062	0.0063	0.0064	0.0005	0.0072	22	...	...	...	1500	34
35	0.0055	0.0056	0.0057	0.0004	0.0064	21	...	...	...	1325	35
36	0.0049	0.0050	0.0051	0.0004	0.0058	20	...	...	...	1200	36
37	0.0044	0.0045	0.0046	0.0003	0.0052	20	...	...	...	1075	37
38	0.0039	0.0040	0.0041	0.0003	0.0047	19	...	...	...	950	38
39	0.0034	0.0035	0.0036	0.0002	0.0041	18	...	...	...	850	39
40	0.0030	0.0031	0.0032	0.0002	0.0037	17	...	...	...	775	40
41	0.0027	0.0028	0.0029	0.0002	0.0033	17	...	...	...	700	41
42	0.0024	0.0025	0.0026	0.0002	0.0030	16	...	...	...	625	42
43	0.0021	0.0022	0.0023	0.0002	0.0026	15	...	...	...	550	43
44	0.0019	0.0020	0.0021	0.0001	0.0024	14	...	...	...	500	44

	Conductor Resistance at 20°C, Ohms per Foot †, ††						Theoretical Nominal Bare Wire Diameter, Inches †, ††	
	Minimum	Nominal	Maximum					
45	3.080	3.348	3.616	0.00010	0.00205	11	0.00176	45
46	3.870	4.207	4.544	0.00010	0.00185	10	0.00157	46
47	4.808	5.291	5.714	0.00010	0.00170	8	0.00140	47
48	6.205	6.745	7.285	0.00010	0.00150	7	0.00124	48
49	7.744	8.417	9.090	0.00010	0.00130	6	0.00111	49
50	9.734	10.58	11.43	0.00010	0.00120	5	0.00099	50
51	12.32	13.39	14.46	0.00010	0.00110	...	0.00088	51
52	15.69	17.05	18.41	0.00010	0.00100	...	0.00078	52
53	19.48	21.17	22.86	0.00005	0.00085	...	0.00070	53
54	24.82	26.98	29.14	0.00005	0.00075	...	0.00062	54
55	31.54	34.28	37.02	0.00005	0.00070	...	0.00055	55
56	39.73	43.19	46.65	0.00005	0.00065	...	0.00049	56

*This maximum bare wire diameter shall be permitted to be exceeded; see 1.6.7.1.

† For metric equivalent, see Table 1-1.

†† Conductor size tolerance based on resistance; see 1.6.7.2.

Copyright National Electrical Manufacturers Association
Provided by IHS under license with NEMA
No reproduction or networking permitted without license from IHS

Not for Resale

MW 30-C (Heavy)
POLYESTER (AMIDE) (IMIDE), HEAVY FILM IINSULATED ROUND COPPER MAGNET WIRE
THERMAL CLASS 180

INSULATING MATERIALS The coating is based on polyester (amide)(imide) resins (1.4.2).

THERMAL CLASS 180°C when tested in accordance with Part 1, para. 1.8 and Part 3, para. 3.58.

GENERAL REQUIREMENTS See Part 1.

Properties	Test Procedure, See Part 3, Paragraph	Requirements
DIMENSIONS	3.2.1.1	See Table H (MW 30-C)
ADHERENCE AND FLEXIBILITY	3.3.1	No cracks visible in the film coating
ELONGATION	3.4	Not less than value in Table H (MW 30-C)
HEAT SHOCK	3.5	No cracks visible in the film coating after conditioning at 200°C
SPRINGBACK	3.7.1	Not greater than value in Table H (MW 30-C)
DIELECTRIC STRENGTH	3.8.2 3.8.3	4-9 AWG— Not less than value in Table H (MW 30-C) 10-44 AWG—Not less than value in Table H (MW 30-C)
CONTINUITY	3.9.2 3.9.3	14–44 AWG—the number of discontinuities shall not exceed 5 45–50 AWG—the number of discontinuities shall not exceed 10
PERIODIC CONFORMANCE TESTS		
THERMOPLASTIC FLOW	3.50	Median not less than 300°C with heavy film insulated 18 or 36 AWG
SOLUBILITY	3.51	Two specimens of heavy film insulated 18 or 36 AWG immersed in xylene and 50/50 xylene/butyl Cellosolve shall not soften sufficiently to expose the bare conductor
DIELECTRIC STRENGTH AT RATED TEMPERATURE	3.52	Heavy film insulated wire shall average not less than 4275 volts for 18 AWG or 1900 volts with 36 AWG
SCRAPE RESISTANCE	3.59	Lowest "grams-to-fail" load for any one of the three tests and the average of the three tests shall not be less than the values in Table H (MW 30-C)

Copyright National Electrical Manufacturers Association
Provided by IHS under license with NEMA
No reproduction or networking permitted without license from IHS

Not for Resale

Table H (MW 30-C)
POLYESTER (AMIDE) (IMIDE), HEAVY FILM INSULATED ROUND COPPER MAGNET WIRE
THERMAL CLASS 180

AWG Size	Bare Wire Diameter, Inches †			Insulation †		Elongation, Minimum	Scrape, Grams to Fail		Springback, Maximum Degrees	Dielectric Strength, Minimum Breakdown	AWG Size
	Minimum	Nominal	Maximum	Minimum Increase in Diameter, Inches	Maximum Overall Diameter, Inches	Percent	Average	Minimum	per Turn	Volts	
4	0.2023	0.2043	0.2053*	0.0037	0.2098	38	...	...	...	3700	4
5	0.1801	0.1819	0.1828*	0.0036	0.1872	37	...	...	...	3600	5
6	0.1604	0.1620	0.1628*	0.0035	0.1671	37	...	...	...	3500	6
7	0.1429	0.1443	0.1450*	0.0034	0.1491	36	...	...	...	3400	7
8	0.1272	0.1285	0.1292*	0.0033	0.1332	36	...	...	...	3300	8
9	0.1133	0.1144	0.1150*	0.0032	0.1189	36	...	...	...	3200	9
10	0.1009	0.1019	0.1024*	0.0031	0.1061	35	1490	1270	...	6200	10
11	0.0898	0.0907	0.0912*	0.0030	0.0948	35	1490	1270	...	6000	11
12	0.0800	0.0808	0.0812*	0.0029	0.0847	34	1490	1270	...	5800	12
13	0.0713	0.0720	0.0724*	0.0028	0.0757	34	1490	1270	...	5600	13
14	0.0635	0.0641	0.0644*	0.0032	0.0682	33	1490	1270	42	6325	14
15	0.0565	0.0571	0.0574*	0.0030	0.0609	33	1400	1190	46	6175	15
16	0.0503	0.0508	0.0511*	0.0029	0.0545	33	1310	1115	50	6000	16
17	0.0448	0.0453	0.0455*	0.0028	0.0488	32	1230	1045	54	5850	17
18	0.0399	0.0403	0.0405*	0.0026	0.0437	32	1150	980	58	5700	18
19	0.0355	0.0359	0.0361*	0.0025	0.0391	31	1070	910	62	5500	19
20	0.0317	0.0320	0.0322*	0.0023	0.0351	30	1000	850	66	5400	20
21	0.0282	0.0285	0.0286*	0.0022	0.0314	30	940	800	53	5250	21
22	0.0250	0.0253	0.0254*	0.0021	0.0281	29	880	750	58	5125	22
23	0.0224	0.0226	0.0227*	0.0020	0.0253	29	820	700	62	5000	23
24	0.0199	0.0201	0.0202*	0.0019	0.0227	28	770	655	67	4850	24
25	0.0177	0.0179	0.0180*	0.0018	0.0203	28	720	615	72	4725	25
26	0.0157	0.0159	0.0160*	0.0017	0.0182	27	675	575	76	4600	26
27	0.0141	0.0142	0.0143	0.0016	0.0164	27	635	540	50	4500	27
28	0.0125	0.0126	0.0127	0.0016	0.0147	26	595	510	55	4375	28
29	0.0112	0.0113	0.0114	0.0015	0.0133	26	560	480	61	4250	29
30	0.0099	0.0100	0.0101	0.0014	0.0119	25	525	450	66	4150	30
31	0.0088	0.0089	0.0090	0.0013	0.0108	24	...	...	...	3825	31
32	0.0079	0.0080	0.0081	0.0012	0.0098	24	...	...	...	3525	32
33	0.0070	0.0071	0.0072	0.0011	0.0088	23	...	...	...	3250	33
34	0.0062	0.0063	0.0064	0.0010	0.0078	22	...	...	...	2975	34
35	0.0055	0.0056	0.0057	0.0009	0.0070	21	...	...	...	2750	35
36	0.0049	0.0050	0.0051	0.0008	0.0063	20	...	...	...	2525	36
37	0.0044	0.0045	0.0046	0.0008	0.0057	20	...	...	...	2325	37
38	0.0039	0.0040	0.0041	0.0007	0.0051	19	...	...	...	2150	38
39	0.0034	0.0035	0.0036	0.0006	0.0045	18	...	...	...	1975	39
40	0.0030	0.0031	0.0032	0.0006	0.0040	17	...	...	...	1800	40
41	0.0027	0.0028	0.0029	0.0005	0.0036	17	...	...	...	1675	41
42	0.0024	0.0025	0.0026	0.0004	0.0032	16	...	...	...	1525	42
43	0.0021	0.0022	0.0023	0.0004	0.0029	15	...	...	...	1400	43
44	0.0019	0.0020	0.0021	0.0004	0.0027	14	...	...	...	1300	44
	Conductor Resistance at 20°C Ohms per Foot †, ††						Theoretical Nominal Bare Wire Diameter Inches †, ††				
	Minimum	Nominal	Maximum								
45	3.080	3.348	3.616	0.00030	0.00230	11		0.00176			45
46	3.870	4.207	4.544	0.00030	0.00210	10		0.00157			46
47	4.808	5.291	5.714	0.00030	0.00190	8		0.00140			47
48	6.205	6.745	7.285	0.00020	0.00170	7		0.00124			48
49	7.744	8.417	9.090	0.00020	0.00150	6		0.00111			49
50	9.734	10.58	11.43	0.00020	0.00140	5		0.00099			50

*This maximum bare wire diameter shall be permitted to be exceeded; see 1.6.7.2.

† For metric equivalent, see Table 1-2.

†† Conductor size tolerance based on resistance; see 1.6.7.3.

Copyright National Electrical Manufacturers Association
Provided by IHS under license with NEMA
No reproduction or networking permitted without license from IHS

Not for Resale

MW 30-C (Triple)
POLYESTER (AMIDE) (IMIDE), TRIPLE FILM INSULATED ROUND COPPER MAGNET WIRE
THERMAL CLASS 180

INSULATING MATERIAL The coating is based on polyester (amide) (imide) resins (1.4.2).

THERMAL CLASS 180°C when tested in accordance with Part 1, para. 1.8 and Part 3, para. 3.58.

GENERAL REQUIREMENTS See Part 1.

Properties	Test Procedure, See Part 3, Paragraph	Requirements
DIMENSIONS	3.2.1.2	See Table T (MW 30-C)
ADHERENCE AND FLEXIBILITY	3.3.1	No cracks visible in the film coating
ELONGATION	3.4	Not less than the value in Table T (MW 30-C).
HEAT SHOCK	3.5	No cracks in the film coating after conditioning at 200°C
SPRINGBACK	3.7.1	Not greater than the value in Table T (MW 30-C)
DIELECTRIC STRENGTH	3.8.3	Not less than the value in Table T (MW 30-C)
CONTINUITY	3.9.2	The number of discontinuities shall not exceed 3
PERIODIC CONFORMANCE TESTS		
THERMOPLASTIC FLOW	3.50	Median of not less than 300°C with heavy film insulated 18 AWG
SOLUBILITY	3.51	Two specimens of heavy film insulated 18 AWG immersed in xylene and 50/50 xylene butyl Cellosolve shall not soften sufficiently to expose bare conductor.
DIELECTRIC STRENGTH AT RATED TEMPERATURE	3.52	Heavy film insulated wire shall average not less than 4275 volts for 18 AWG
SCRAPE RESISTANCE	3.59	Lowest "grams to fail" load for any one of the three tests and the average of the three tests shall not be less than the values in Table T (MW 30-C)

Copyright National Electrical Manufacturers Association
Provided by IHS under license with NEMA
No reproduction or networking permitted without license from IHS

Not for Resale

Table T (MW 30-C)
POLYESTER (AMIDE) (IMIDE), TRIPLE FILM INSULATED ROUND COPPER MAGNET WIRE
THERMAL CLASS 180

AWG Size	Bare Wire Diameter, Inches †			Insulation †		Elongation, Minimum	Scrape, Grams to Fail		Springback, Maximum	Dielectric Strength, Minimum	AWG Size
	Minimum	Nominal	Maximum	Minimum Increase in Diameter, Inches	Maximum Overall Diameter, Inches	Percent	Average	Minimum	Degrees per Turn	Breakdown Volts	
14	0.0635	0.0641	0.0644*	0.0048	0.0700	33	1735	1475	46	8450	14
15	0.0565	0.0571	0.0574*	0.0045	0.0627	33	1620	1375	49	8225	15
16	0.0503	0.0508	0.0511*	0.0043	0.0562	33	1525	1295	53	8000	16
17	0.0448	0.0453	0.0455*	0.0041	0.0504	32	1425	1210	58	7800	17
18	0.0399	0.0403	0.0405*	0.0039	0.0452	32	1335	1135	62	7600	18
19	0.0355	0.0359	0.0361*	0.0037	0.0406	31	1255	1065	66	7400	19
20	0.0317	0.0320	0.0322*	0.0035	0.0364	30	1180	1000	70	7200	20
21	0.0282	0.0285	0.0286*	0.0033	0.0326	30	1115	945	53	7025	21
22	0.0250	0.0253	0.0254*	0.0032	0.0293	29	1045	890	58	6850	22
23	0.0224	0.0226	0.0227*	0.0030	0.0264	29	975	830	64	6675	23
24	0.0199	0.0201	0.0202*	0.0029	0.0238	28	910	770	69	6500	24
25	0.0177	0.0179	0.0180*	0.0027	0.0214	28	850	720	74	6325	25
26	0.0157	0.0159	0.0160*	0.0026	0.0193	27	795	675	80	6150	26
27	0.0141	0.0142	0.0143	0.0024	0.0173	27	735	625	55	6000	27
28	0.0125	0.0126	0.0127	0.0023	0.0156	26	690	585	60	5850	28
29	0.0112	0.0113	0.0114	0.0022	0.0142	26	645	550	65	5700	29
30	0.0099	0.0100	0.0101	0.0021	0.0128	25	605	515	70	5550	30
31	0.0088	0.0089	0.0090	0.0017	0.0114	24	...	...	...	4600	31
32	0.0079	0.0080	0.0081	0.0016	0.0103	24	...	...	...	4275	32
33	0.0070	0.0071	0.0072	0.0014	0.0092	23	...	...	...	3950	33
34	0.0062	0.0063	0.0064	0.0013	0.0082	22	...	...	...	3675	34
35	0.0055	0.0056	0.0057	0.0012	0.0074	21	...	...	...	3425	35
36	0.0049	0.0050	0.0051	0.0011	0.0067	20	...	...	...	3175	36
37	0.0044	0.0045	0.0046	0.0010	0.0060	20	...	...	...	2950	37
38	0.0039	0.0040	0.0041	0.0009	0.0054	19	...	...	...	2725	38
39	0.0034	0.0035	0.0036	0.0008	0.0048	18	...	...	...	2525	39
40	0.0030	0.0031	0.0032	0.0008	0.0043	17	...	...	...	2350	40
41	0.0027	0.0028	0.0029	0.0007	0.0039	17	...	...	...	2175	41
42	0.0024	0.0025	0.0026	0.0007	0.0035	16	...	...	...	2025	42
43	0.0021	0.0022	0.0023	0.0006	0.0032	15	...	...	...	1875	43
44	0.0019	0.0020	0.0021	0.0006	0.0029	14	...	...	...	1750	44

*This maximum bare wire diameter shall be permitted to be exceeded; see 1.6.7.2.
† For metric equivalent, see Table 1-3.

Copyright National Electrical Manufacturers Association
Provided by IHS under license with NEMA
No reproduction or networking permitted without license from IHS

Not for Resale

MW 31-C (Paper)
PAPER COVERED BARE OR FILM INSULATED ROUND COPPER MAGNET WIRE
THERMAL CLASS 90 OR 105

INSULATING MATERIALS The insulating material shall be rope paper or kraft paper, or both. The paper covering shall be one or more tapes wrapped firmly, closely, evenly, and continuously around the wire. The use of suitable adhesive material shall be permitted.

THERMAL CLASS 90°C unimpregnated or 105°C impregnated or in oil, as defined in Part 3, para. 3.58.2.

GENERAL REQUIREMENTS See Part 1.

Properties	Test Procedure, See Part 3, Paragraph	Requirements
DIMENSIONS	3.2.1.3	See Table P (MW 31-C)
ADHERENCE AND FLEXIBILITY	3.3.2	After winding on mandrel given below, no openings sufficient to expose the bare or film coated wire

AWG Size	Mandrel Wrap Method	Elongation Method
8 – 13	5d	15% (+2, -0)
14 – 22	4d	10% (+2, -0)
23 – 32	3d	8% (+2, -0)

	3.3.3	After elongation per test paragraph, no openings sufficient to expose the bare or film coated wire		
ELONGATION	3.4	Not less than value in Table P (MW 31-C)		
SPRINGBACK	3.7.2	Not greater than 5.5°		
DIELECTRIC STRENGTH	3.8.4			

		Minimum Breakdown Voltage Paper Covered Wire		
AWG Size	Diameter of Mandrel, inches	Bare	Single Film	Heavy Film
8 – 9	None	115	---	1490
10	1.00	330	---	2980
11 – 15	0.75	265	1820*	3065
16 – 20	0.50	265	1630	2750
21 – 24	0.50	265	1495	2475
25 – 28	0.25	200	1305	2200
29 – 32	0.25	200	1030	1790

*Sizes 14 and 15 only.

Copyright National Electrical Manufacturers Association
Provided by IHS under license with NEMA
No reproduction or networking permitted without license from IHS

Not for Resale

Table P (MW 31-C)
PAPER COVERED BARE OR FILM INSULATED ROUND COPPER MAGNET WIRE
THERMAL CLASS 90 OR 105

AWG Size	Bare Wire Diameter, Inches			Elongation, Minimum Percent	Minimum Increase, Inches	Maximum Overall Diameter, Inches †			AWG Size
	Minimum	Nominal	Maximum			Bare	Single Film	Heavy Film	
8	0.1272	0.1285	0.1292*	25	0.0030	0.1342	...	0.1382	8
9	0.1133	0.1144	0.1150*	25	0.0030	0.1200	...	0.1239	9
10	0.1009	0.1019	0.1024*	25	0.0030	0.1074	...	0.1111	10
11	0.0898	0.0907	0.0912*	25	0.0024	0.0952	...	0.0988	11
12	0.0800	0.0808	0.0812*	25	0.0024	0.0852	...	0.0887	12
13	0.0713	0.0720	0.0724*	25	0.0024	0.0764	...	0.0797	13
14	0.0635	0.0641	0.0644*	20	0.0024	0.0684	0.0706	0.0722	14
15	0.0565	0.0571	0.0574*	20	0.0024	0.0614	0.0634	0.0649	15
16	0.0503	0.0508	0.0511*	20	0.0024	0.0551	0.0571	0.0585	16
17	0.0448	0.0453	0.0455*	20	0.0024	0.0495	0.0515	0.0528	17
18	0.0399	0.0403	0.0405*	20	0.0024	0.0445	0.0464	0.0477	18
19	0.0355	0.0359	0.0361*	20	0.0024	0.0401	0.0419	0.0431	19
20	0.0317	0.0320	0.0322*	20	0.0024	0.0362	0.0379	0.0391	20
21	0.0282	0.0285	0.0286*	20	0.0024	0.0326	0.0343	0.0354	21
22	0.0250	0.0253	0.0254*	20	0.0024	0.0294	0.0310	0.0321	22
23	0.0224	0.0226	0.0227*	10	0.0024	0.0267	0.0283	0.0293	23
24	0.0199	0.0201	0.0202*	10	0.0024	0.0242	0.0257	0.0267	24
25	0.0177	0.0179	0.0180*	10	0.0018	0.0210	0.0224	0.0233	25
26	0.0157	0.0159	0.0160*	10	0.0018	0.0190	0.0203	0.0212	26
27	0.0141	0.0142	0.0143	10	0.0018	0.0173	0.0186	0.0194	27
28	0.0125	0.0126	0.0127	10	0.0018	0.0157	0.0170	0.0177	28
29	0.0112	0.0113	0.0114	10	0.0018	0.0144	0.0156	0.0163	29
30	0.0099	0.0100	0.0101	10	0.0018	0.0131	0.0142	0.0149	30
31	0.0088	0.0089	0.0090	10	0.0018	0.0120	0.0130	0.0138	31
32	0.0079	0.0080	0.0081	10	0.0018	0.0011	0.0121	0.0128	32

*This maximum bare wire diameter shall be permitted to be exceeded; see 1.6.7.2.

†The maximum overall diameters have been calculated in accordance with the following:

AWG Size	Maximum Increase, Inches	Minimum Increase, Inches	Maximum Tape Thickness, Inches
8 – 12	0.014	0.004	0.0033
13 – 20	0.009	0.003	0.0025

Copyright National Electrical Manufacturers Association
Provided by IHS under license with NEMA
No reproduction or networking permitted without license from IHS

Not for Resale

MW 32-C (Paper and Cotton)
DOUBLE PAPER SINGLE COTTON COVERED BARE RECTANGULAR AND SQUARE COPPER MAGNET WIRE THERMAL CLASS 90 OR 105

INSULATING MATERIALS The insulating material shall be rope paper or kraft paper, or both. The cotton shall be of good quality and substantially free from knots, ravelings, foreign matter, and other irregularities. The paper covering shall be two thicknesses of tape applied using one or two tapes wrapped firmly, closely, evenly, and continuously around the wire. The use of suitable adhesive material shall be permitted. The cotton covering shall be wrapped firmly, closely, evenly, and continuously around the wire and in the direction opposite to that in which the paper was spirally wrapped.

THERMAL CLASS 90°C unimpregnated or 105°C impregnated or in oil, as defined in Part 3, para. 3.58.2.

GENERAL REQUIREMENTS See Part 1.

Properties	Test Procedure, See Part 3, Paragraph	Requirements
DIMENSIONS	3.2.2.2	a. Radii—see Table 1-13 b. Thickess and width tolerances—see Table 1-14 c. Dimensions and increase due to insulation—see Table PC (MW 32-C)
ELONGATION	3.4	Not less than 32 percent for thicknesses of 0.049 inch (1.25 mm) and greater or 30 percent for thicknesses less than 0.049 inch (1.25 mm).
SPRINGBACK	3.7.2	Not greater than 5.5°
COVERAGE	3.12.2	Paper and cotton covering shall not loosen sufficiently to expose the bare wire

Nominal Thickness of Bare Wire, Inches	Ratio of Mandrel Diameter to Thickness of Bare Wire	
	Paper and Cotton Covered	Paper Covered
0.220 – 0.098	6	6
0.088 – 0.049	4	6
0.044 – 0.025	3	6

Copyright National Electrical Manufacturers Association
Provided by IHS under license with NEMA
No reproduction or networking permitted without license from IHS

Not for Resale

TABLE PC (MW 32-C)
DOUBLE PAPER SINGLE COTTON COVERED BARE RECTANGULAR AND SQUARE COPPER MAGNET WIRE THERMAL CLASS 90 OR 105

Maximum Increase in Dimensions, inches (mm), Due to Double Paper and Single Cotton Covering

Nominal Thickness		Nominal Width																										Nominal Thickness	
		2.00	2.12	2.24	2.37	2.50	2.65	2.80	3.00	3.15	3.35	3.55	3.75	4.00	4.25	4.50	4.75	5.00	5.30	5.60	6.00	6.30	6.70	7.10	7.50	8.00	8.50	9.00	9.50	10.0	10.6	11.2	11.8	12.5	Millimeters	
	Inches	0.079	†0.083	0.088	†0.093	0.098	†0.104	0.110	†0.118	0.124	†0.132	0.140	†0.148	0.157	†0.167	0.177	†0.187	0.197	†0.209	0.220	†0.236	0.248	†0.264	0.280	†0.295	0.315	†0.335	0.354	†0.374	0.394	†0.417	0.441	†0.465	0.492	Inches	
0.63	0.025	0.019" (0.483 mm)											0.020" (0.508 mm)								0.021" (0.533 mm)								0.022" (0.559 mm)				0.025	0.63
0.71	0.028																																		0.028	0.71
0.80	0.031																																		0.031	0.80
0.90	0.035																																		0.035	0.90
1.00	0.039																																		0.039	1.00
1.12	0.044																																		0.044	1.12
1.25	0.049																																		0.049	1.25
1.40	0.055																																		0.055	1.40
1.60	0.063																																		0.063	1.60
1.80	0.071																																		0.071	1.80
2.00	0.079																																		0.079	2.00
2.24	0.088																																		0.088	2.24
2.50	0.098																																		0.098	2.50
2.80	0.110																																		0.110	2.80
3.15	0.124									0.020"			0.021"								0.022"				0.023" (0.584 mm)									0.124	3.15
3.55	0.140																																		0.140	3.55
4.00	0.157																																		0.157	4.00
4.50	0.177																																		0.177	4.50
5.00	0.197																					0.023"			0.024" (0.356 mm)										0.197	5.00
5.60	0.220																																		0.220	5.60

R-40 Series Intermediate Number.

EXAMPLE - Preferred Size.... 0.055 x 0.110 (R-20 x R-20)
Intermediate Size..... 0.055 x 0.118 (R-20 x R-40)

NOTE-The minimum increase shall be 70 percent of the maximum increase given in the table, rounded off to the nearest 0.001 inch (0.025 mm).

Copyright National Electrical Manufacturers Association
Provided by IHS under license with NEMA
No reproduction or networking permitted without license from IHS

Not for Resale

MW 33-C (Paper)
PAPER COVERED BARE RECTANGULAR AND SQUARE COPPER MAGNET WIRE
THERMAL CLASS 90 OR 105

INSULATING MATERIALS The insulating material shall be rope paper or kraft paper, or both. The paper covering shall be of one or more tapes wrapped firmly, closely, evenly, and continuously around the wire. The use of a suitable adhesive material shall be permitted.

THERMAL CLASS 90°C unimpregnated or 105°C impregnated or in oil, as defined in Part 3, para. 3.58.1.

GENERAL REQUIREMENTS See Part 1.

Properties	Test Procedure, See Part 3, Paragraph	Requirements
DIMENSIONS	3.2.2.2	a. Conductor radii—see Table 1-13 b. Conductor thickness and width tolerances—see Table 1-14 c. The increase in thickness for the paper covering shall be as follows: $\left(\frac{\text{Minimum increase}}{\text{in thickness}}\right)=2\left(\frac{\text{Equivalent number}}{\text{of paper layers}^*}-1\right)\left(\frac{\text{Nominal}}{\text{tape thickness}}\right)$ $\left(\frac{\text{Maximum increase}}{\text{in thickness}}\right)=2\left(\frac{\text{Equivalent number}}{\text{of paper layers}^*}+1\right)\left(\frac{\text{Nominal}}{\text{tape thickness}}\right)$ d. The increase in width due to the paper covering shall be equal to or less than the increase in thickness * See Table in Part 1, para. 1.5.1.
ELONGATION	3.4	Not less than 32 percent for conductor thicknesses of 0.049 inch (1.25 mm) and greater or 30 percent for conductor thicknesses less than 0.049 inch (1.25 mm)
SPRINGBACK	3.7.2	Not greater than 5.5°
COVERAGE	3.12.2	Paper covering shall not loosen sufficiently to expose the bare wire

Nominal Thickness of Bare Wire, Inches	Ratio of Mandrel Diameters to Thickness of Bare Wire
0.250 – 0.101	6
0.100 – 0.051	6
0.050 – 0.025	6

NOTE I- The maximum increase due to the paper covering may be exceeded provided the overall dimension of the covered wire does not exceed the sum of the maximum conductor thickness plus the maximum increase due to paper.

NOTE II- The number of papers, the tape thickness and the degree of overlap shall be agreed upon between the user and the supplier.

Copyright National Electrical Manufacturers Association
Provided by IHS under license with NEMA
No reproduction or networking permitted without license from IHS

Not for Resale

6470247 0514979 177

Table P (MW 33-C)
Deleted

Copyright National Electrical Manufacturers Association
Provided by IHS under license with NEMA
No reproduction or networking permitted without license from IHS

Not for Resale

MW 35-A (Single)
POLYESTER (AMIDE) (IMIDE) OVERCOATED WITH POLYAMIDEIMIDE, SINGLE FILM INSULATED ROUND ALUMINUM MAGNET WIRE THERMAL CLASS 220

INSULATING MATERIALS The conductor shall be coated with a dual film. The underlying coating is based on polyester (amide)(imide) resins (1.4.2). The superimposed coating is based on polyamideimide resins (1.4.2).

THERMAL CLASS 220°C when tested in accordance with Part 1, para. 1.8 and Part 3, para. 3.58.1.

GENERAL REQUIREMENTS See Part 1.

Properties	Test Procedure, See Part 3, Paragraph	Requirements
DIMENSIONS	3.2.1.1	See Table S (MW 35-A)
ADHERENCE AND FLEXIBILITY	3.3.1	No cracks visible in the film coating
ELONGATION	3.4	Not less than value in Table S (MW 35-A)
HEAT SHOCK	3.5	No cracks visible in the film coating after conditioning at 240°C
DIELECTRIC STRENGTH	3.8.3	Not less than value in Table S (MW 35-A)
CONTINUITY	3.9.2	The number of discontinuities shall not exceed 25
PERIODIC CONFORMANCE TESTS		
THERMOPLASTIC FLOW	3.50	Median not less than 300°C with heavy film insulated 18 AWG
SOLUBILITY	3.51	Two specimens of heavy film insulated 18 AWG immersed in xylene and 50/50 xylene/butyl Cellosolve shall not soften sufficiently to expose the bare conductor
DIELECTRIC STRENGTH AT RATED TEMPERATURE	3.52	Heavy film insulated wire shall average not less than 4275 volts for 18 AWG
SCRAPE RESISTANCE	3.59	Lowest "grams-to-fail" load for any one of the three tests and the average of the three tests shall not be less than the values in Table S (MW 35-A)

Copyright National Electrical Manufacturers Association
Provided by IHS under license with NEMA
No reproduction or networking permitted without license from IHS

Not for Resale

Table S (MW 35-A)
POLYESTER (AMIDE) (IMIDE) OVERCOATED WITH POLYAMIDEIMIDE, SINGLE FILM INSULATED ROUND ALUMINUM MAGNET WIRE THERMAL CLASS 220

AWG Size	Bare Wire Diameter, Inches †			Insulation †		Elongation, Minimum Percent	Scrape, Grams to Fail		Dielectric Strength, Minimum Breakdown Volts	AWG Size
	Minimum	Nominal	Maximum	Minimum Increase in Diameter, Inches	Maximum Overall Diameter, Inches		Average	Minimum		
14	0.0635	0.0641	0.0644*	0.0016	0.0666	15	505	430	3525	14
15	0.0565	0.0571	0.0574*	0.0015	0.0594	15	470	400	3425	15
16	0.0503	0.0508	0.0511*	0.0014	0.0531	15	440	375	3325	16
17	0.0448	0.0453	0.0455*	0.0014	0.0475	15	415	350	3250	17
18	0.0399	0.0403	0.0405*	0.0013	0.0424	15	390	330	3175	18
19	0.0355	0.0359	0.0361*	0.0012	0.0379	15	360	305	3075	19
20	0.0317	0.0320	0.0322*	0.0012	0.0339	14	335	285	3000	20
21	0.0282	0.0285	0.0286*	0.0011	0.0303	14	315	265	2925	21
22	0.0250	0.0253	0.0254*	0.0011	0.0270	14	295	250	2850	22
23	0.0224	0.0226	0.0227*	0.0010	0.0243	14	275	235	2775	23
24	0.0199	0.0201	0.0202*	0.0010	0.0217	13	260	220	2700	24
25	0.0177	0.0179	0.0180*	0.0009	0.0194	13	245	205	2625	25
26	0.0157	0.0159	0.0160*	0.0009	0.0173	13	230	190	2550	26
27	0.0141	0.0142	0.0143	0.0008	0.0156	13	215	175	2500	27
28	0.0125	0.0126	0.0127	0.0008	0.0140	12	200	160	2425	28

*This maximum bare wire diameter shall be permitted to be exceeded; see 1.6.7.2.
† For metric equivalent, see Table 1-1.

Copyright National Electrical Manufacturers Association
Provided by IHS under license with NEMA
No reproduction or networking permitted without license from IHS

Not for Resale

MW 35-A (Heavy)
POLYESTER (AMIDE)(IMIDE) OVERCOATED WITH POLYAMIDEIMIDE, HEAVY FILM INSULATED ROUND ALUMINUM MAGNET WIRE THERMAL CLASS 220

INSULATING MATERIALS The conductor shall be coated with a dual film. The underlying coating is based on polyester (amide)(imide) resins (1.4.2). The superimposed coating is based on polyamideimide resins (1.4.2).

THERMAL CLASS 220°C when tested in accordance with Part 1, para. 1.8 and Part 3, para. 3.58.1.

GENERAL REQUIREMENTS See Part 1.

Properties	Test Procedure, See Part 3, Paragraph	Requirements
DIMENSIONS	3.2.1.1	See Table H (MW 35-A)
ADHERENCE AND FLEXIBILITY	3.3.1	No cracks visible in the film coating
ELONGATION	3.4	Not less than value in Table H (MW 35-A)
HEAT SHOCK	3.5	No cracks visible in the film coating after conditioning at 240°C
DIELECTRIC STRENGTH	3.8.2 3.8.3	4-7 AWG—not less than value in Table H (MW 35-A) 8-28 AWG—not less than value in Table H (MW 35-A)
CONTINUITY	3.9.2	The number of discontinuities shall not exceed 10
PERIODIC CONFORMANCE TESTS		
THERMOPLASTIC FLOW	3.50	Median not less than 300°C with heavy film insulated 18 AWG
SOLUBILITY	3.51	Two specimens of heavy film insulated 18 AWG immersed in xylene and 50/50 xylene/butyl Cellosolve shall not soften sufficiently to expose the bare conductor
DIELECTRIC STRENGTH AT RATED TEMPERATURE	3.52	Heavy film insulated wire shall average not less than 4275 volts 18 AWG
SCRAPE RESISTANCE	3.59	Lowest "grams-to-fail" load for any one of the three tests and the average of the three tests shall not be less than the values in Table H (MW 35-A)

Copyright National Electrical Manufacturers Association
Provided by IHS under license with NEMA
No reproduction or networking permitted without license from IHS

Not for Resale

Table H (MW 35-A)
POLYESTER (AMIDE) (IMIDE) OVERCOATED WITH POLYAMIDEIMIDE, HEAVY FILM INSULATED ROUND ALUMINUM MAGNET WIRE THERMAL CLASS 220

AWG Size	Bare Wire Diameter, Inches †			Insulation †		Elongation, Minimum	Scrape, Grams to Fail		Dielectric Strength, Minimum Breakdown	AWG Size
	Minimum	Nominal	Maximum	Minimum Increase in Diameter, Inches	Maximum Overall Diameter, Inches	Percent	Average	Minimum	Volts	
4	0.2023	0.2043	0.2053*	0.0037	0.2098	15	...	...	3700	4
5	0.1801	0.1819	0.1828*	0.0036	0.1872	15	...	...	3600	5
6	0.1604	0.1620	0.1628*	0.0035	0.1671	15	...	...	3500	6
7	0.1429	0.1443	0.1450*	0.0034	0.1491	15	...	...	3400	7
8	0.1272	0.1285	0.1292*	0.0033	0.1332	15	...	...	6600	8
9	0.1133	0.1144	0.1150*	0.0032	0.1189	15	...	...	6400	9
10	0.1009	0.1019	0.1024*	0.0031	0.1061	15	895	760	6200	10
11	0.0898	0.0907	0.0912*	0.0030	0.0948	15	895	760	6000	11
12	0.0800	0.0808	0.0812*	0.0029	0.0847	15	895	760	5800	12
13	0.0713	0.0720	0.0724*	0.0028	0.0757	15	895	760	5600	13
14	0.0635	0.0641	0.0644*	0.0032	0.0682	15	895	760	6325	14
15	0.0565	0.0571	0.0574*	0.0030	0.0609	15	840	715	6175	15
16	0.0503	0.0508	0.0511*	0.0029	0.0545	15	785	670	6000	16
17	0.0448	0.0453	0.0455*	0.0028	0.0488	15	740	625	5850	17
18	0.0399	0.0403	0.0405*	0.0026	0.0437	15	690	590	5700	18
19	0.0355	0.0359	0.0361*	0.0025	0.0391	15	640	545	5550	19
20	0.0317	0.0320	0.0322*	0.0023	0.0351	14	600	510	5400	20
21	0.0282	0.0285	0.0286*	0.0022	0.0314	14	565	480	5250	21
22	0.0250	0.0253	0.0254*	0.0021	0.0281	14	520	450	5125	22
23	0.0224	0.0226	0.0227*	0.0020	0.0253	14	490	420	5000	23
24	0.0199	0.0201	0.0202*	0.0019	0.0227	13	460	395	4850	24
25	0.0177	0.0179	0.0180*	0.0018	0.0203	13	440	380	4725	25
26	0.0157	0.0159	0.0160*	0.0017	0.0182	13	420	365	4680	26
27	0.0141	0.0142	0.0143*	0.0016	0.0164	13	405	355	4500	27
28	0.0125	0.0126	0.0127*	0.0016	0.0147	12	395	350	4375	28

*This maximum bare wire diameter shall be permitted to be exceeded; see 1.6.7.2.
† For metric equivalent, see Table 1-2.

Copyright National Electrical Manufacturers Association
Provided by IHS under license with NEMA
No reproduction or networking permitted without license from IHS

Not for Resale

MW 35-C (Single)
POLYESTER (AMIDE) (IMIDE) OVERCOATED WITH POLYAMIDEIMIDE, SINGLE FILM INSULATED ROUND COPPER MAGNET WIRE THERMAL CLASS 200

INSULATING MATERIALS The conductor shall be coated with a dual film. The underlying coating is based on polyester (amide)(imide) resins (1.4.2). The superimposed coating is based on polyamideimide resins (1.4.2).

THERMAL CLASS 200°C when tested in accordance with Part 1, para. 1.8 and Part 3, para. 3.58.1.

GENERAL REQUIREMENTS See Part 1.

Properties	Test Procedure, See Part 3, Paragraph	Requirements
DIMENSIONS	3.2.1.1	See Table S (MW 35-C)
ADHERENCE AND FLEXIBILITY	3.3.1	No cracks visible in the film coating
ELONGATION	3.4	Not less than value in Table S (MW 35-C)
HEAT SHOCK	3.5	No cracks visible in the film coating after conditioning at 220°C
SPRINGBACK	3.7.1	Not greater than value in Table S (MW 35-C)
DIELECTRIC STRENGTH	3.8.3	Not less than value in Table S (MW 35-C)
CONTINUITY	3.9.2	The number of discontinuities shall not exceed 15
PERIODIC CONFORMANCE TESTS		
THERMOPLASTIC FLOW	3.50	Median not less than 300°C with heavy film insulated 18 or 36 AWG
SOLUBILITY	3.51	Two specimens of heavy film insulated 18 or 36 AWG immersed in xylene and 50/50 xylene/butyl Cellosolve shall not soften sufficiently to expose the bare conductor
DIELECTRIC STRENGTH AT RATED TEMPERATURE	3.52	Heavy film insulated wire shall average not less than 4275 volts for 18 AWG or 1900 volts for 36 AWG
SCRAPE RESISTANCE	3.59	Lowest "grams-to-fail" load for any one of the three tests and the average of the three tests shall not be less than the values in Table S (MW 35-C)

Copyright National Electrical Manufacturers Association
Provided by IHS under license with NEMA
No reproduction or networking permitted without license from IHS

Not for Resale

Table S (MW 35-C)
POLYESTER (AMIDE) (IMIDE) OVERCOATED WITH POLYAMIDEIMIDE, SINGLE FILM INSULATED ROUND COPPER MAGNET WIRE THERMAL CLASS 200

AWG Size	Bare Wire Diameter, Inches †			Insulation †		Elongation, Minimum	Scrape, Grams to Fail		Springback, Maximum Degrees	Dielectric Strength, Minimum Breakdown	AWG Size
	Minimum	Nominal	Maximum	Minimum Increase in Diameter, Inches	Maximum Overall Diameter, Inches	Percent	Average	Minimum	per Turn	Volts	
14	0.0635	0.0641	0.0644*	0.0016	0.0666	33	840	715	42	3525	14
15	0.0565	0.0571	0.0574*	0.0015	0.0594	33	780	665	46	3425	15
16	0.0503	0.0508	0.0511*	0.0014	0.0531	33	735	625	50	3325	16
17	0.0448	0.0453	0.0455*	0.0014	0.0475	32	690	585	54	3250	17
18	0.0399	0.0403	0.0405*	0.0013	0.0424	32	645	550	58	3175	18
19	0.0355	0.0359	0.0361*	0.0012	0.0379	31	600	510	62	3075	19
20	0.0317	0.0320	0.0322*	0.0012	0.0339	30	560	475	66	3000	20
21	0.0282	0.0285	0.0286*	0.0011	0.0303	30	525	445	53	2925	21
22	0.0250	0.0253	0.0254*	0.0011	0.0270	29	490	415	58	2850	22
23	0.0224	0.0226	0.0227*	0.0010	0.0243	29	460	390	62	2775	23
24	0.0199	0.0201	0.0202*	0.0010	0.0217	28	430	365	67	2700	24
25	0.0177	0.0179	0.0180*	0.0009	0.0194	28	400	340	72	2625	25
26	0.0157	0.0159	0.0160*	0.0009	0.0173	27	380	325	76	2550	26
27	0.0141	0.0142	0.0143	0.0008	0.0156	27	355	300	50	2500	27
28	0.0125	0.0126	0.0127	0.0008	0.0140	26	335	285	55	2425	28
29	0.0112	0.0113	0.0114	0.0007	0.0126	26	310	265	61	2375	29
30	0.0099	0.0100	0.0101	0.0007	0.0112	25	295	250	66	2300	30
31	0.0088	0.0089	0.0090	0.0006	0.0100	24	...	...	...	2075	31
32	0.0079	0.0080	0.0081	0.0006	0.0091	24	...	...	...	1850	32
33	0.0070	0.0071	0.0072	0.0005	0.0081	23	...	...	...	1675	33
34	0.0062	0.0063	0.0064	0.0005	0.0072	22	...	...	...	1500	34
35	0.0055	0.0056	0.0057	0.0004	0.0064	21	...	...	...	1325	35
36	0.0049	0.0050	0.0051	0.0004	0.0058	20	...	...	...	1200	36
37	0.0044	0.0045	0.0046	0.0003	0.0052	20	...	...	...	1075	37
38	0.0039	0.0040	0.0041	0.0003	0.0047	19	...	...	...	950	38
39	0.0034	0.0035	0.0036	0.0002	0.0041	18	...	...	...	850	39
40	0.0030	0.0031	0.0032	0.0002	0.0037	17	...	...	...	775	40
41	0.0027	0.0028	0.0029	0.0002	0.0033	17	...	...	...	700	41
42	0.0024	0.0025	0.0026	0.0002	0.0030	16	...	...	...	625	42
43	0.0021	0.0022	0.0023	0.0002	0.0026	15	...	...	...	550	43
44	0.0019	0.0020	0.0021	0.0001	0.0024	14	...	...	...	500	44

*This maximum bare wire diameter shall be permitted to be exceeded; see 1.6.7.2.
† For metric equivalent, see Table 1-1.

Copyright National Electrical Manufacturers Association
Provided by IHS under license with NEMA
No reproduction or networking permitted without license from IHS
Not for Resale

MW 35-C (Heavy)
POLYESTER (AMIDE) (IMIDE) OVERCOATED WITH POLYAMIDEIMIDE, HEAVY FILM INSULATED ROUND COPPER MAGNET WIRE THERMAL CLASS 200

INSULATING MATERIALS The conductor shall be coated with a dual film. The underlying coating is based on polyester (amide)(imide) resins (1.4.2). The superimposed coating is based on polyamideimide resins (1.4.2).

THERMAL CLASS 200°C when tested in accordance with Part 1, para. 1.8 and Part 3, para. 3.58.1.

GENERAL REQUIREMENTS See Part 1.

Characteristics	Test Procedure, See Part 3, Paragraph	Requirements
DIMENSIONS	3.2.1.1	See Table H (MW 35-C)
ADHERENCE AND FLEXIBILITY	3.3.1	No cracks visible in the film coating
ELONGATION	3.4	Not less than value in Table H (MW 35-C)
HEAT SHOCK	3.5	No cracks visible in the film coating after conditioning at 220°C
SPRINGBACK	3.7.1 3.7.2	Not greater than value in Table H (MW 35-C) Not greater than 5°
DIELECTRIC STRENGTH	3.8.2 3.8.3	4-9 AWG—not less than values in Table H (MW 35-C) 10-44 AWG—not less than value in Table H (MW 35-C)
CONTINUITY	3.9.2	14-44 AWG—the number of discontinuities shall not exceed 5
PERIODIC CONFORMANCE TESTS		
THERMOPLASTIC FLOW	3.50	Median not less than 300°C with heavy film insulated 18 or 36 AWG
SOLUBILITY	3.51	Two specimens of heavy film insulated 18 or 36 AWG immersed in xylene and 50/50 xylene/butyl Cellosolve shall not soften sufficiently to expose the bare conductor
DIELECTRIC STRENGTH AT RATED TEMPERATURE	3.52	Heavy film coated wire shall average not less than 4275 volts for 18 AWG or 1900 volts with 36 AWG
SCRAPE RESISTANCE	3.59	Lowest "grams-to-fail" load for any one of the three tests and the average of the three tests shall not be less than the values in Table H (MW 35-C)

Copyright National Electrical Manufacturers Association
Provided by IHS under license with NEMA
No reproduction or networking permitted without license from IHS

Not for Resale

Table H (MW 35-C)
POLYESTER (AMIDE)(IMIDE) OVERCOATED WITH POLYAMIDEIMIDE, HEAVY FILM INSULATED ROUND COPPER MAGNET WIRE THERMAL CLASS 200

AWG Size	Bare Wire Diameter, Inches †			Insulation †		Elongation, Minimum	Scrape, Grams to Fail		Springback, Maximum Degrees	Dielectric Strength, Maximum Breakdown	AWG Size
	Minimum	Nominal	Maximum	Minimum Increase in Diameter, Inches	Maximum Overall Diameter, Inches	Percent	Average	Minimum	per Turn	Volts	
4	0.2023	0.2043	0.2053*	0.0037	0.2098	38	...	...	...	3700	4
5	0.1801	0.1819	0.1828*	0.0036	0.1872	37	...	...	...	3600	5
6	0.1604	0.1620	0.1628*	0.0035	0.1671	37	...	...	...	3500	6
7	0.1429	0.1443	0.1450*	0.0034	0.1491	36	...	...	...	3400	7
8	0.1272	0.1285	0.1292*	0.0033	0.1332	36	...	...	...	3300	8
9	0.1133	0.1144	0.1150*	0.0032	0.1189	36	...	...	...	3200	9
10	0.1009	0.1019	0.1024*	0.0031	0.1061	35	1490	1270	...	6200	10
11	0.0898	0.0907	0.0912*	0.0030	0.0948	35	1490	1270	...	6000	11
12	0.0800	0.0808	0.0812*	0.0029	0.0847	34	1490	1270	...	5800	12
13	0.0713	0.0720	0.0724*	0.0028	0.0757	34	1490	1270	...	5600	13
14	0.0635	0.0641	0.0644*	0.0032	0.0682	33	1490	1270	42	6325	14
15	0.0565	0.0571	0.0574*	0.0030	0.0609	33	1400	1190	46	6175	15
16	0.0503	0.0508	0.0511*	0.0029	0.0545	33	1310	1115	50	6000	16
17	0.0448	0.0453	0.0455*	0.0028	0.0488	32	1230	1045	54	5850	17
18	0.0399	0.0403	0.0405*	0.0026	0.0437	32	1150	980	58	5700	18
19	0.0355	0.0359	0.0361*	0.0025	0.0391	31	1070	910	62	5550	19
20	0.0317	0.0320	0.0322*	0.0023	0.0351	30	1000	850	66	5400	20
21	0.0282	0.0285	0.0286*	0.0022	0.0314	30	940	800	53	5250	21
22	0.0250	0.0253	0.0254*	0.0021	0.0281	29	880	750	58	5125	22
23	0.0224	0.0226	0.0227*	0.0020	0.0253	29	820	700	62	5000	23
24	0.0199	0.0201	0.0202*	0.0019	0.0227	28	770	655	67	4850	24
25	0.0177	0.0179	0.0180*	0.0018	0.0203	28	720	615	72	4725	25
26	0.0157	0.0159	0.0160*	0.0017	0.0182	27	675	575	76	4600	26
27	0.0141	0.0142	0.0143	0.0016	0.0164	27	635	540	50	4500	27
28	0.0125	0.0126	0.0127	0.0016	0.0147	26	595	510	55	4375	28
29	0.0112	0.0113	0.0114	0.0015	0.0133	26	560	480	61	4250	29
30	0.0099	0.0100	0.0101	0.0014	0.0119	25	525	450	66	4150	30
31	0.0088	0.0089	0.0090	0.0013	0.0108	24	...	...	...	3825	31
32	0.0079	0.0080	0.0081	0.0012	0.0098	24	...	...	...	3525	32
33	0.0070	0.0071	0.0072	0.0011	0.0088	23	...	...	...	3250	33
34	0.0062	0.0063	0.0064	0.0010	0.0078	22	...	...	...	2975	34
35	0.0055	0.0056	0.0057	0.0009	0.0070	21	...	...	...	2750	35
36	0.0049	0.0050	0.0051	0.0008	0.0063	20	...	...	...	2525	36
37	0.0044	0.0045	0.0046	0.0008	0.0057	20	...	...	...	2325	37
38	0.0039	0.0040	0.0041	0.0007	0.0051	19	...	...	...	2150	38
39	0.0034	0.0035	0.0036	0.0006	0.0045	18	...	...	...	1975	39
40	0.0030	0.0031	0.0032	0.0006	0.0040	17	...	...	...	1800	40
41	0.0027	0.0028	0.0029	0.0005	0.0036	17	...	...	...	1675	41
42	0.0024	0.0025	0.0026	0.0004	0.0032	16	...	...	...	1525	42
43	0.0021	0.0022	0.0023	0.0004	0.0029	15	...	...	...	1400	43
44	0.0019	0.0020	0.0021	0.0004	0.0027	14	...	...	...	1300	44

*This maximum bare wire diameter shall be permitted to be exceeded; see 1.6.7.2.
† For metric equivalent, see Table 1-2.

Copyright National Electrical Manufacturers Association
Provided by IHS under license with NEMA
No reproduction or networking permitted without license from IHS

Not for Resale

MW 35-C (Triple)
POLYESTER (AMIDE)(IMIDE) OVERCOATED WITH POLYAMIDEIMIDE, TRIPLE FILM INSULATED ROUND COPPER MAGNET WIRE THERMAL CLASS 200

INSULATING MATERIALS The conductor shall be coated with a dual film. The underlying coating is based on polyester (amide)(imide) resins (1.4.2). The superimposed coating is based on polyamideimide resins (1.4.2).

THERMAL CLASS 200°C when tested in accordance with Part 1, para. 1.8 and Part 3, para. 3.58.1.

GENERAL REQUIREMENTS See Part 1.

Properties	Test Procedure, See Part 3, Paragraph	Requirements
DIMENSIONS	3.2.1.1	See Table T (MW 35-C)
ADHERENCE AND FLEXIBILITY	3.3.1	No cracks visible in the film coating
ELONGATION	3.4	Not less than value in Table T (MW 35-C)
HEAT SHOCK	3.5	No cracks in the film coating after conditioning at 200°C
SPRINGBACK	3.7.1	Not greater than value in Table T (MW 35-C)
DIELECTRIC STRENGTH	3.8.3	Not less than value in Table T (MW 35-C)
CONTINUITY	3.9.2	The number of discontinuities shall not exceed 3
PERIODIC CONFORMANCE TESTS		
THERMOPLASTIC FLOW	3.50	Median not less than 300°C with heavy film insulated 18 AWG
SOLUBILITY	3.51	Two specimens of heavy film insulated 18 or 36 AWG immersed in xylene and 50/50 xylene/butyl Cellosolve shall not soften sufficiently to expose the bare conductor
DIELECTRIC STRENGTH AT RATED TEMPERATURE	3.52	Heavy film insulated wire shall average not less than 4275 volts for 18 AWG insulated or 1900 volts for 36 AWG.
SCRAPE RESISTANCE	3.59	Lowest "grams-to-fail" load for any one of the three tests and the average of the three tests shall not be less than the values in Table T (MW 35-C)

Copyright National Electrical Manufacturers Association
Provided by IHS under license with NEMA
No reproduction or networking permitted without license from IHS

Not for Resale

Table T (MW 35-C)
POLYESTER (AMIDE)(IMIDE) OVERCOATED WITH POLYAMIDEIMIDE, TRIPLE FILM INSULATED ROUND COPPER MAGNET WIRE THERMAL CLASS 200

AWG Size	Bare Wire Diameter, Inches †			Insulation †		Elongation, Minimum	Scrape, Grams to Fail		Springback, Maximum	Dielectric Strength, Minimum	AWG Size
	Minimum	Nominal	Maximum	Minimum Increase in Diameter, Inches	Maximum Overall Diameter, Inches	Percent	Average	Minimum	Degrees per Turn	Breakdown Volts	
14	0.0635	0.0641	0.0644*	0.0048	0.0700	33	1735	1475	46	8450	14
15	0.0565	0.0571	0.0574*	0.0045	0.0627	33	1620	1375	49	8225	15
16	0.0503	0.0508	0.0511*	0.0043	0.0562	33	1525	1295	53	8000	16
17	0.0448	0.0453	0.0455*	0.0041	0.0504	32	1425	1210	58	7800	17
18	0.0399	0.0403	0.0405*	0.0039	0.0452	32	1335	1135	62	7600	18
19	0.0355	0.0359	0.0361*	0.0037	0.0406	31	1255	1065	66	7400	19
20	0.0317	0.0320	0.0322*	0.0035	0.0364	30	1180	1000	70	7200	20
21	0.0282	0.0285	0.0286*	0.0033	0.0326	30	1115	945	53	7025	21
22	0.0250	0.0253	0.0254*	0.0032	0.0293	29	1045	890	58	6850	22
23	0.0224	0.0226	0.0227*	0.0030	0.0264	29	975	830	64	6675	23
24	0.0199	0.0201	0.0202*	0.0029	0.0238	28	910	770	69	6500	24
25	0.0177	0.0179	0.0180*	0.0027	0.0214	28	850	720	74	6325	25
26	0.0157	0.0159	0.0160*	0.0026	0.0193	27	795	675	80	6150	26
27	0.0141	0.0142	0.0143	0.0024	0.0173	27	735	625	55	6000	27
28	0.0125	0.0126	0.0127	0.0023	0.0156	26	690	585	60	5850	28
29	0.0112	0.0113	0.0114	0.0022	0.0142	26	645	550	65	5700	29
30	0.0099	0.0100	0.0101	0.0021	0.0128	25	605	515	70	5550	30
31	0.0088	0.0089	0.0090	0.0017	0.0114	24	...	...	...	4600	31
32	0.0079	0.0080	0.0081	0.0016	0.0103	24	...	...	...	4275	32
33	0.0070	0.0071	0.0072	0.0014	0.0092	23	...	...	...	3950	33
34	0.0062	0.0063	0.0064	0.0013	0.0082	22	...	...	...	3675	34
35	0.0055	0.0056	0.0057	0.0012	0.0074	21	...	...	...	3425	35
36	0.0049	0.0050	0.0051	0.0011	0.0067	20	...	...	...	3175	36
37	0.0044	0.0045	0.0046	0.0010	0.0060	20	...	...	...	2950	37
38	0.0039	0.0040	0.0041	0.0009	0.0054	19	...	...	...	2725	38
39	0.0034	0.0035	0.0036	0.0008	0.0048	18	...	...	...	2525	39
40	0.0030	0.0031	0.0032	0.0008	0.0043	17	...	...	...	2350	40
41	0.0027	0.0028	0.0029	0.0007	0.0039	17	...	...	...	2175	41
42	0.0024	0.0025	0.0026	0.0007	0.0035	16	...	...	...	2025	42
43	0.0021	0.0022	0.0023	0.0006	0.0032	15	...	...	...	1875	43
44	0.0019	0.0020	0.0021	0.0006	0.0029	14	...	...	...	1750	44

*This maximum bare wire diameter shall be permitted to be exceeded; see 1.6.7.2.
† For metric equivalent, see Table 1-3.

Copyright National Electrical Manufacturers Association
Provided by IHS under license with NEMA
No reproduction or networking permitted without license from IHS

Not for Resale

MW 36-A (Heavy and Quadruple)
POLYESTER (AMIDE) (IMIDE) OVERCOATED WITH POLYAMIDEIMIDE, HEAVY AND QUADRUPLE *FILM INSULATED* RECTANGULAR AND SQUARE ALUMINUM MAGNET WIRE THERMAL CLASS 220

INSULATING MATERIALS The conductor shall be coated with a dual film. The underlying coating is based on polyester (amide)(imide) resins (1.4.2). The superimposed coating is based on polyamideimide resins (1.4.2).

THERMAL CLASS 220°C when tested in accordance with Part 1, para. 1.8 and Part 3, para. 3.58.1.

GENERAL REQUIREMENTS See Part 1.

Properties	Test Procedure, See Part 3, Paragraph	Requirements
DIMENSIONS	3.2.2.1	Rectangular Wire: a. Dimensions and radii—see Table 1-13 b. Thickness and width tolerances—see Table 1-14 c. Increase in thickness and width due to film coating—see Table TW (MW 36-A) Square Wire: Bare wire dimensions and tolerances, radii, and increase in dimensions due to film coating—See Table SQ (MW 36-A)
ADHERENCE AND FLEXIBILITY	3.3.3	No cracks visible in the film coating
ELONGATION	3.4	Not less than 15 percent
HEAT SHOCK	3.5	No cracks visible in the film coating after 10 percent elongation followed by conditioning at 240°C
DIELECTRIC STRENGTH	3.8.2	Minimum Breakdown Voltage Film Coating / Any Three of Four Electrodes / Fourth Electrode Heavy: 1500 / 500 Quadruple: 2500 / 900
PERIODIC CONFORMANCE TESTS		
THERMOPLASTIC FLOW	3.50	Median not less than 300°C with heavy film insulated 18 AWG
SOLUBILITY	3.51	Two specimens immersed in xylene and 50/50 xylene/ butyl Cellosolve shall not soften sufficiently to expose the bare conductor
DIELECTRIC STRENGTH AT RATED TEMPERATURE	3.52	Heavy film insulated wire shall average not less than 4275 volts for 18 AWG

Copyright National Electrical Manufacturers Association
Provided by IHS under license with NEMA
No reproduction or networking permitted without license from IHS
Not for Resale

POLYESTER (AMIDE) (IMIDE) OVERCOATED WITH POLYAMIDEMIDE, HEAVY AND QUADRUPLE FILM INSULATED RECTANGULAR AND SQUARE ALUMINUM MAGNET WIRE THERMAL CLASS 220

Table TW Rectangular (MW 36-A) Increase in Thickness and Width Due to Film Coating

	Increase in Width				Increase in Thickness			
	Minimum		Maximum		Minimum		Maximum	
Build	inches	mm	inches	mm	inches	mm	inches	mm
Heavy	0.0025	0.064	0.0045	0.114	0.0030	0.076	0.0050	0.127
Quadruple	0.0040	0.102	0.0060	0.152	0.0050	0.127	0.0070	0.178

• The maximum increase shall be permitted to be exceeded provided the maximum overall dimensions of the coated wire does not exceed the sum of the maximum dimensions of the bare wire plus the maximum increase due to the coating.

Table SQ Square (MW 36-A) Inches—Dimensions 1 – 14 AWG

Square AWG Size	Bare Wire Dimensions			Radii (± 25%)	Heavy		Quadruple	
	Minimum	Nominal	Maximum	Nominal	Minimum Increase	Maximum Overall	Minimum Increase	Maximum Overall
1	0.2864	0.2893	0.2922	0.040	0.0030	0.2972	0.0050	0.2992
2	0.2550	0.2576	0.2602	0.040	0.0030	0.2652	0.0050	0.2672
3	0.2271	0.2294	0.2317	0.040	0.0030	0.2367	0.0050	0.2387
4	0.2023	0.2043	0.2063	0.040	0.0030	0.2113	0.0050	0.2133
5	0.1801	0.1819	0.1837	0.040	0.0030	0.1887	0.0050	0.1907
6	0.1604	0.1620	0.1636	0.032	0.0030	0.1686	0.0050	0.1706
7	0.1429	0.1443	0.1457	0.032	0.0030	0.1507	0.0050	0.1527
8	0.1272	0.1285	0.1298	0.032	0.0030	0.1348	0.0050	0.1368
9	0.1133	0.1144	0.1155	0.026	0.0030	0.1205	0.0050	0.1225
10	0.1009	0.1019	0.1029	0.026	0.0030	0.1079	0.0050	0.1099
11	0.0897	0.0907	0.0917	0.020	0.0030	0.0967	0.0050	0.0987
12	0.0798	0.0808	0.0818	0.020	0.0030	0.0868	0.0050	0.0888
13	0.0710	0.0720	0.0730	0.016	0.0030	0.0780	0.0050	0.0800
14	0.0631	0.0641	0.0651	0.016	0.0030	0.0701	0.0050	0.0721

Table SQ Square (MW 36-A) mm—Dimensions 1 – 14 AWG

Square AWG Size	Bare Wire Dimensions			Radii (± 25%)	Heavy		Quadruple	
	Minimum	Nominal	Maximum	Nominal	Minimum Increase	Maximum Overall	Minimum Increase	Maximum Overall
1	7.275	7.348	7.422	1.02	0.076	7.549	0.127	7.600
2	6.477	6.543	6.609	1.02	0.076	6.736	0.127	6.787
3	5.768	5.827	5.885	1.02	0.076	6.012	0.127	6.063
4	5.138	5.189	5.240	1.02	0.076	5.367	0.127	5.418
5	4.575	4.620	4.666	1.02	0.076	4.793	0.127	4.844
6	4.074	4.115	4.155	0.81	0.076	4.282	0.127	4.333
7	3.630	3.665	3.701	0.81	0.076	3.828	0.127	3.879
8	3.231	3.264	3.297	0.81	0.076	3.424	0.127	3.475
9	2.878	2.906	2.934	0.66	0.076	3.061	0.127	3.112
10	2.563	2.588	2.614	0.66	0.076	2.741	0.127	2.791
11	2.278	2.304	2.329	0.51	0.076	2.456	0.127	2.507
12	2.027	2.052	2.078	0.51	0.076	2.205	0.127	2.256
13	1.803	1.829	1.854	0.41	0.076	1.981	0.127	2.032
14	1.603	1.628	1.654	0.41	0.076	1.781	0.127	1.831

Copyright National Electrical Manufacturers Association
Provided by IHS under license with NEMA
No reproduction or networking permitted without license from IHS

Not for Resale

MW 36-C (Heavy and Quadruple)
POLYESTER (AMIDE)(IMIDE) OVERCOATED WITH POLYAMIDEIMIDE, HEAVY AND QUADRUPLE FILM INSULATED RECTANGULAR AND SQUARE COPPER MAGNET WIRE
THERMAL CLASS 200

INSULATING MATERIALS The conductor shall be coated with a dual film. The underlying coating is based on polyester (amide)(imide) resins (1.4.2). The superimposed coating is based on polyamideimide resins (1.4.2).

THERMAL CLASS 200°C when tested in accordance with Part 1, para. 1.8 and Part 3, para. 3.58.1.

GENERAL REQUIREMENTS See Part 1.

Properties	Test Procedure, See Part 3, Paragraph	Requirements
DIMENSIONS	3.2.2.1	Rectangular Wire: a. Dimensions and radii-see Table 1-13 b. Thickness and width tolerances-see Table 1-14 c. Increase in thickness and width due to film coating—see Table TW (MW 36-C) Square Wire: bare wire dimensions and tolerances, radii, and increase in dimensions due to film coating-See Table SQ (MW 36-C)
ADHERENCE AND FLEXIBILITY	3.3.3	No cracks visible in the film coating
ELONGATION	3.4	Not less than 32 percent
HEAT SHOCK	3.5	No cracks visible in the film coating after 15 percent elongation followed by conditioning at 220°C
SPRINGBACK	3.7.2	Not greater than 5°
DIELECTRIC STRENGTH	3.8.2	Minimum Breakdown Voltage Film Coating / Any Three of Four Electrodes / Fourth Electrode Heavy 1500 500 Quadruple 2500 900 Applicable to heavy coated sizes with a thickness less than 0.049 inch (1.25 mm) or a width greater than 0.492 inch (12.5 mm) or a width to thickness ratio greater than 5:1, and all quadruple. Other heavy coated sizes require BEND test
BEND	3.8.6	Heavy coated sizes with a thickness of 0.049 inch (1.25 mm) or greater, a width of 0.492 inch (12.5 mm) or less, and a width to thickness ratio of not more than 5:1, after bending shall have a dielectric strength not less than in paragraph 7 above
PERIODIC CONFORMANCE TESTS		
THERMOPLASTIC FLOW	3.50	Median not less than 300°C with heavy film insulated 18 AWG
SOLUBILITY	3.51	Two specimens immersed in xylene and 50/50 xylene/butyl Cellosolve shall not soften sufficiently to expose the bare conductor
DIELECTRIC STRENGTH AT RATED TEMPERATURE	3.52	Heavy film insulated wire shall average not less than 4275 volts for 18 AWG

Copyright National Electrical Manufacturers Association
Provided by IHS under license with NEMA
No reproduction or networking permitted without license from IHS

Not for Resale

POLYESTER (AMIDE) (IMIDE) OVERCOATED WITH POLYAMIDEMIDE, HEAVY AND QUADRUPLE FILM INSULATED RECTANGULAR AND SQUARE COPPER MAGNET WIRE THERMAL CLASS 200

Table TW Rectangular (MW 36-C) Increase in Thickness and Width Due to Film Coating

	Increase in Width				Increase in Thickness			
	Minimum		Maximum		Minimum		Maximum	
Build	inches	mm	inches	mm	inches	mm	inches	mm
Heavy	0.0025	0.064	0.0045	0.114	0.0030	0.076	0.0050	0.127
Quadruple	0.0040	0.102	0.0060	0.152	0.0050	0.127	0.0070	0.178

*The maximum increase shall be permitted to be exceeded provided the maximum overall dimensions of the coated wire does not exceed the sum of the maximum dimensions of the bare wire plus the maximum increase due to the coating.

Table SQ Square (MW 36-C) Inches—Dimensions 1 – 14 AWG

Square					Heavy		Quadruple	
AWG	Bare Wire Dimensions			Radii (± 25%)	Minimum	Maximum	Minimum	Maximum
Size	Minimum	Nominal	Maximum	Nominal	Increase	Overall	Increase	Overall
1	0.2864	0.2893	0.2922	0.040	0.0030	0.2972	0.0050	0.2992
2	0.2550	0.2576	0.2602	0.040	0.0030	0.2652	0.0050	0.2672
3	0.2271	0.2294	0.2317	0.040	0.0030	0.2367	0.0050	0.2387
4	0.2023	0.2043	0.2063	0.040	0.0030	0.2113	0.0050	0.2133
5	0.1801	0.1819	0.1837	0.040	0.0030	0.1887	0.0050	0.1907
6	0.1604	0.1620	0.1636	0.032	0.0030	0.1686	0.0050	0.1706
7	0.1429	0.1443	0.1457	0.032	0.0030	0.1507	0.0050	0.1527
8	0.1272	0.1285	0.1298	0.032	0.0030	0.1348	0.0050	0.1368
9	0.1133	0.1144	0.1155	0.026	0.0030	0.1205	0.0050	0.1225
10	0.1009	0.1019	0.1029	0.026	0.0030	0.1079	0.0050	0.1099
11	0.0897	0.0907	0.0917	0.020	0.0030	0.0967	0.0050	0.0987
12	0.0798	0.0808	0.0818	0.020	0.0030	0.0868	0.0050	0.0888
13	0.0710	0.0720	0.0730	0.016	0.0030	0.0780	0.0050	0.0800
14	0.0631	0.0641	0.0651	0.016	0.0030	0.0701	0.0050	0.0721

Table SQ Square (MW 36-C) mm—Dimensions 1 –14 AWG

Square					Heavy		Quadruple	
AWG	Bare Wire Dimensions			Radii (± 25%)	Minimum	Maximum	Minimum	Maximum
Size	Minimum	Nominal	Maximum	Nominal	Increase	Overall	Increase	Overall
1	7.275	7.348	7.422	1.02	0.076	7.549	0.127	7.600
2	6.477	6.543	6.609	1.02	0.076	6.736	0.127	6.787
3	5.768	5.827	5.885	1.02	0.076	6.012	0.127	6.063
4	5.138	5.189	5.240	1.02	0.076	5.367	0.127	5.418
5	4.575	4.620	4.666	1.02	0.076	4.793	0.127	4.844
6	4.074	4.115	4.155	0.81	0.076	4.282	0.127	4.333
7	3.630	3.665	3.701	0.81	0.076	3.828	0.127	3.879
8	3.231	3.264	3.297	0.81	0.076	3.424	0.127	3.475
9	2.878	2.906	2.934	0.66	0.076	3.061	0.127	3.112
10	2.563	2.588	2.614	0.66	0.076	2.741	0.127	2.791
11	2.278	2.304	2.329	0.51	0.076	2.456	0.127	2.507
12	2.027	2.052	2.078	0.51	0.076	2.205	0.127	2.256
13	1.803	1.829	1.854	0.41	0.076	1.981	0.127	2.032
14	1.603	1.628	1.654	0.41	0.076	1.781	0.127	1.831

Copyright National Electrical Manufacturers Association
Provided by IHS under license with NEMA
No reproduction or networking permitted without license from IHS
Not for Resale

MW 41-C (Single)
SINGLE GLASS FIBER COVERED, BARE OR FILM INSULATED ROUND COPPER MAGNET WIRE THERMAL CLASS 155

INSULATING MATERIALS The glass fiber shall be electrical grade continuous filament glass yarn. If an underlying film coating is used, it shall have at least a Class 130 rating. The glass fiber covering shall be wrapped firmly, closely, evenly, and continuously around the wire. The glass fiber covering shall be treated with an insulating varnish to provide a tough outer finish.

THERMAL CLASS 155° as defined in Part 3, para. 3.58.2.

GENERAL REQUIREMENTS See Part 1.

DIMENSIONS — Test Procedure, See Part 3, Paragraph: 3.2.1.3 — Requirements: See Table S (MW 41-C)

ADHERENCE AND FLEXIBILITY — Test Procedure, See Part 3, Paragraph: 3.3.2

Covering shall not open sufficiently to expose the bare or film insulated wire after bending on mandrel sizes as follows:

AWG Size	Mandrel Diameter
0 and larger	15d
1 to 30	10d

ELONGATION — Test Procedure, See Part 3, Paragraph: 3.4

Not less than the following:

AWG Size	Minimum Elongation Percent: With Glass Fiber Covering	Minimum Elongation Percent: Glass Fiber Covering Removed
4/0–0	35.0	35.0
1–8	30.0	30.0
9–15	20.0	30.0
16–21	15.0	25.0
22–28	...	20.0
29 and 30	...	15.0

SPRINGBACK — Test Procedure, See Part 3, Paragraph: 3.7.2

Not greater than 5° for Glass Fiber Covered Bare
Not greater than 5.5° for Glass Fiber Covered Film Insulated

DIELECTRIC STRENGTH — Test Procedure, See Part 3, Paragraph: 3.8.2, 3.8.4 or 3.8.5, 3.8.4 or 3.8.5

Not less than the following:

AWG Size	Diameter of Mandrel: Inches	Diameter of Mandrel: mm	Minimum Breakdown, Volts*
4/0–9	...	...	170
10–23	1.00	25.4	360
24–30	0.25	6.3	225

*For glass fiber covered wire having an underlying film insulation, add the minimum breakdown voltage given in Part 2 for the film insulated wire

Copyright National Electrical Manufacturers Association
Provided by IHS under license with NEMA
No reproduction or networking permitted without license from IHS

Not for Resale

Table S (MW 41-C)
SINGLE GLASS FIBER COVERED, BARE OR FILM INSULATED ROUND COPPER MAGNET WIRE THERMAL CLASS 155

AWG Size	Bare Wire Diameter, Inches†			Minimum Increase in Glass Fiber Covering, Inches †	Maximum Overall Diameter, Inches†			AWG Size
	Minimum	Nominal	Maximum		Bare	Single Film	Heavy Film	
4/0	0.4554	0.4600	0.4646	0.0045	0.4716	...	...	4/0
3/0	0.4055	0.4096	0.4137	0.0045	0.4207	...	...	3/0
2/0	0.3612	0.3648	0.3684	0.0045	0.3754	...	...	2/0
1/0	0.3217	0.3249	0.3281	0.0045	0.3351	...	...	1/0
1	0.2864	0.2893	0.2922	0.0045	0.2992	...	...	1
2	0.2550	0.2576	0.2602	0.0045	0.2672	...	...	2
3	0.2271	0.2294	0.2317	0.0045	0.2387	...	...	3
4	0.2023	0.2043	0.2053*	0.0045	0.2133	...	0.2168	4
5	0.1801	0.1819	0.1828*	0.0045	0.1907	...	0.1942	5
6	0.1604	0.1620	0.1628*	0.0045	0.1706	...	0.1741	6
7	0.1429	0.1443	0.1450*	0.0045	0.1527	...	0.1561	7
8	0.1272	0.1285	0.1292*	0.0045	0.1368	...	0.1402	8
9	0.1133	0.1144	0.1150*	0.0045	0.1225	...	0.1259	9
10	0.1009	0.1019	0.1024*	0.0040	0.1089	...	0.1121	10
11	0.0898	0.0907	0.0912*	0.0040	0.0976	...	0.1008	11
12	0.0800	0.0808	0.0812*	0.0040	0.0876	...	0.0907	12
13	0.0713	0.0720	0.0724*	0.0040	0.0787	...	0.0817	13
14	0.0635	0.0641	0.0644*	0.0040	0.0707	0.0726	0.0742	14
15	0.0565	0.0571	0.0574*	0.0040	0.0637	0.0654	0.0669	15
16	0.0503	0.0508	0.0511*	0.0040	0.0573	0.0591	0.0605	16
17	0.0448	0.0453	0.0455*	0.0040	0.0518	0.0535	0.0548	17
18	0.0399	0.0403	0.0405*	0.0040	0.0467	0.0484	0.0497	18
19	0.0355	0.0359	0.0361*	0.0040	0.0423	0.0439	0.0451	19
20	0.0317	0.0320	0.0322*	0.0040	0.0383	0.0399	0.0411	20
21	0.0282	0.0285	0.0286*	0.0040	0.0348	0.0363	0.0374	21
22	0.0250	0.0253	0.0254*	0.0040	0.0316	0.0330	0.0341	22
23	0.0224	0.0226	0.0227*	0.0040	0.0288	0.0303	0.0313	23
24	0.0199	0.0201	0.0202*	0.0025	0.0243	0.0257	0.0267	24
25	0.0177	0.0179	0.0180*	0.0025	0.0221	0.0234	0.0243	25
26	0.0157	0.0159	0.0160*	0.0025	0.0201	0.0213	0.0222	26
27	0.0141	0.0142	0.0143	0.0025	0.0183	0.0196	0.0204	27
28	0.0125	0.0126	0.0127	0.0025	0.0167	0.0180	0.0187	28
29	0.0112	0.0113	0.0114	0.0025	0.0154	0.0166	0.0173	29
30	0.0099	0.0100	0.0101	0.0025	0.0141	0.0152	0.0159	30

*This maximum bare wire diameter shall be permitted to be exceeded; see 1.6.7.2.
†For metric equivalent, see Table 1-7.

Copyright National Electrical Manufacturers Association
Provided by IHS under license with NEMA
No reproduction or networking permitted without license from IHS

Not for Resale

MW 41-C (Double)
DOUBLE GLASS FIBER COVERED, BARE OR FILM INSULATED ROUND COPPER MAGNET WIRE THERMAL CLASS 155

INSULATING MATERIALS The glass fiber shall be electrical grade continuous filament glass yarn. If an underlying film coating is used, it shall have at least a Class 130 rating. The glass fiber covering shall be wrapped firmly, closely, evenly, and continuously around the wire. Adjacent layers shall be wound in opposite directions. The glass fiber covering shall be treated with an insulating varnish to provide a tough outer finish.

THERMAL CLASS 155°C as defined in Part 3, para. 3.58.2.

GENERAL REQUIREMENTS See Part 1.

Properties	Test Procedure, See Part 3, Paragraph	Requirements
DIMENSIONS	3.2.1.3	See Table D (MW 41-C)
ADHERENCE AND FLEXIBILITY	3.3.2	Covering shall not open sufficiently to expose the bare or film-insulated wire after bending on mandrel sizes as follows:

AWG Size	Mandrel Diameter
0 and larger	15d
1 to 30	10d

ELONGATION — 3.4 — Not less than the following:

AWG Size	Minimum Elongation Percent: With Glass Fiber Covering	Minimum Elongation Percent: Glass Fiber Covering Removed
4/0–0	35.0	35.0
1–8	30.0	30.0
9–15	20.0	30.0
16–21	15.0	25.0
22–28	...	20.0
29 and 30	...	15.0

SPRINGBACK — 3.7.2 — Not greater than 5° for Glass Fiber Covered Bare
Not greater than 5.5° for Glass Fiber Covered Film Insulated

DIELECTRIC STRENGTH — Not less than the following:

AWG Size	Diameter of Mandrel: Inches	Diameter of Mandrel: mm	Minimum Breakdown, Volts*	
4/0–9	...	...	265	3.8.2
10–23	1.00	25.4	540	3.8.4 or 3.8.5
24–30	0.25	6.3	400	3.8.4 or 3.8.5

*For glass fiber covered wire having an underlying film insulation, add the minimum breakdown voltage given in Part 2 for the film insulated wire

Copyright National Electrical Manufacturers Association
Provided by IHS under license with NEMA
No reproduction or networking permitted without license from IHS

Not for Resale

Table D (MW 41-C)
DOUBLE GLASS FIBER COVERED, BARE OR FILM INSULATED ROUND COPPER MAGNET WIRE THERMAL CLASS 155

AWG Size	Bare Wire Diameter, Inches†			Minimum Increase in Glass Fiber Covering, Inches †	Maximum Overall Diameter, Inches†			AWG Size
	Minimum	Nominal	Maximum		Bare	Single Film	Heavy Film	
4/0	0.4554	0.4600	0.4646	0.0070	0.4756	...	...	4/0
3/0	0.4055	0.4096	0.4137	0.0070	0.4247	...	...	3/0
2/0	0.3612	0.3648	0.3684	0.0070	0.3794	...	...	2/0
1/0	0.3217	0.3249	0.3281	0.0070	0.3391	...	...	1/0
1	0.2864	0.2893	0.2922	0.0070	0.3032	...	...	1
2	0.2550	0.2576	0.2602	0.0070	0.2712	...	...	2
3	0.2271	0.2294	0.2317	0.0070	0.2427	...	...	3
4	0.2023	0.2043	0.2053*	0.0070	0.2173	...	0.2210	4
5	0.1801	0.1819	0.1828*	0.0070	0.1947	...	0.1982	5
6	0.1604	0.1620	0.1628*	0.0070	0.1746	...	0.1781	6
7	0.1429	0.1443	0.1450*	0.0070	0.1567	...	0.1601	7
8	0.1272	0.1285	0.1292*	0.0070	0.1408	...	0.1442	8
9	0.1133	0.1144	0.1150*	0.0070	0.1265	...	0.1299	9
10	0.1009	0.1019	0.1024*	0.0060	0.1119	...	0.1151	10
11	0.0898	0.0907	0.0912*	0.0060	0.1006	...	0.1038	11
12	0.0800	0.0808	0.0812*	0.0060	0.0906	...	0.0937	12
13	0.0713	0.0720	0.0724*	0.0060	0.0817	...	0.0847	13
14	0.0635	0.0641	0.0644*	0.0060	0.0737	0.0726	0.0772	14
15	0.0565	0.0571	0.0574*	0.0060	0.0667	0.0654	0.0699	15
16	0.0503	0.0508	0.0511*	0.0060	0.0603	0.0621	0.0635	16
17	0.0448	0.0453	0.0455*	0.0060	0.0548	0.0565	0.0578	17
18	0.0399	0.0403	0.0405*	0.0060	0.0497	0.0514	0.0527	18
19	0.0355	0.0359	0.0361*	0.0060	0.0453	0.0469	0.0481	19
20	0.0317	0.0320	0.0322*	0.0060	0.0413	0.0429	0.0441	20
21	0.0282	0.0285	0.0286*	0.0060	0.0378	0.0393	0.0404	21
22	0.0250	0.0253	0.0254*	0.0060	0.0346	0.0360	0.0371	22
23	0.0224	0.0226	0.0227*	0.0060	0.0318	0.0333	0.0343	23
24	0.0199	0.0201	0.0202*	0.0045	0.0263	0.0277	0.0287	24
25	0.0177	0.0179	0.0180*	0.0045	0.0241	0.0254	0.0263	25
26	0.0157	0.0159	0.0160*	0.0045	0.0221	0.0233	0.0242	26
27	0.0141	0.0142	0.0143	0.0045	0.0203	0.0216	0.0224	27
28	0.0125	0.0126	0.0127	0.0045	0.0187	0.0200	0.0207	28
29	0.0112	0.0113	0.0114	0.0045	0.0174	0.0186	0.0193	29
30	0.0099	0.0100	0.0101	0.0045	0.0161	0.0172	0.0179	30

*This maximum bare wire diameter shall be permitted to be exceeded; see 1.6.7.2.
† For metric equivalent, see Table 1-8.

Copyright National Electrical Manufacturers Association
Provided by IHS under license with NEMA
No reproduction or networking permitted without license from IHS

Not for Resale

MW 42-C (Single)
SINGLE GLASS FIBER COVERED HEAVY FILM INSULATED RECTANGULAR AND SQUARE COPPER MAGNET WIRE THERMAL CLASS 155

INSULATING MATERIALS The glass fiber shall be electrical grade continuous filament glass yarn. The underlying film insulation shall have at least a Class 130 rating. The glass fiber covering shall be wrapped firmly, closely, evenly, and continuously around the wire. The glass fiber covering shall be treated with an insulating varnish to provide a tough outer finish.

THERMAL CLASS 155°C as defined in Part 3, para. 3.58.2.

GENERAL REQUIREMENTS See Part 1.

Properties	Test Procedure, See Part 3, Paragraph	Requirements
DIMENSIONS	3.2.2.2	Rectangular Wire: a. Radii—see Table 1-13 b. Thickness and width tolerances—see Table 1-14 c. Dimensions and increase in thickness—see Table STW (MW 42-C) Square wire: a. Radii—see Table SSQ (MW 42-C) b. Bare size, increase due to insulation—see Table SSQ (MW 42-C)
ADHERENCE AND FLEXIBILITY	3.3.3	No cracks visible in the film insulation after 20 percent elongation. Examine with normal vision and without removal of glass fiber covering
ELONGATION	3.4	Not less than 32 percent for thicknesses of 0.049 inch (1.25 mm) and greater or 30 percent for thicknesses less than 0.049 inch (1.25 mm)
SPRINGBACK	3.7.2	Not greater than 5.5°
DIELECTRIC STRENGTH	3.8.2	Not less than 90 volts/mil (3543 v/mm) of the minimum thickness of the polyester glass fiber covering on one side [one half the minimum calculated from Table STW or SSQ (MW 42-C)] plus the minimum breakdown given in Part 2 for the film insulated wire

Copyright National Electrical Manufacturers Association
Provided by IHS under license with NEMA
No reproduction or networking permitted without license from IHS

Not for Resale

Table STW (MW 42-C)
SINGLE GLASS FIBER COVERED HEAVY FILM INSULATED RECTANGULAR AND SQUARE COPPER MAGNET WIRE THERMAL CLASS 155

Maximum Increase in Thickness, Inches (mm), Due to Single Glass fiber Covering, Heavy Film Insulation and Treating Varnish, Rectangular Wire

Nominal Thickness		Nominal Width																																Nominal Thickness	
		2.00	2.12	2.24	2.37	2.50	2.65	2.80	3.00	3.15	3.35	3.55	3.75	4.00	4.25	4.50	4.75	5.00	5.30	5.60	6.00	6.30	6.70	7.10	7.50	8.00	8.50	9.00	9.50	10.0	10.6	11.2	11.8	12.5	Millimeters
	Inches	0.079	†0.083	0.088	†0.093	0.098	†0.104	0.110	†0.118	0.124	†0.132	0.140	†0.148	0.157	†0.167	0.177	†0.187	0.197	†0.209	0.220	†0.236	0.248	†0.264	0.280	†0.295	0.315	†0.335	0.354	†0.374	0.394	†0.417	0.441	†0.465	0.492	Inches	
0.63	0.025																																		0.025	0.63
0.71	0.028																																		0.028	0.71
0.80	0.031																																		0.031	0.80
0.90	0.035	0.012" (0.305 mm)							0.013" (0.330 mm)									0.014" (0.356mm)			0.015" (0.381 mm)				0.016" (0.406 mm)										0.035	0.90
1.00	0.039																																		0.039	1.00
1.12	0.044																																		0.044	1.12
1.25	0.049																																		0.049	1.25
1.40	0.055																																		0.055	1.40
1.60	0.063																																		0.063	1.60
1.80	0.071																																		0.071	1.80
2.00	0.079																																		0.079	2.00
2.24	0.088																																		0.088	2.24
2.50	0.098																																		0.098	2.50
2.80	0.110																																		0.110	2.80
3.15	0.124																																		0.124	3.15
3.55	0.140																																		0.140	3.55
4.00	0.157																																		0.157	4.00
4.50	0.177																																		0.177	4.50
5.00	0.197																																		0.197	5.00
5.60	0.220																																		0.220	5.60

R-40 Series Intermediate Number.

EXAMPLE – Preferred Size.....0.055 x 0.110 (R-20 x R-20)
Intermediate Size.....0.055 x 0.118 (R-20 x R-20)

NOTE I– The maximum increase due to the glass fiber covering shall be permitted to be exceeded provided the overall dimension of the covered wire does not exceed the sum of the maximum thickness of the bare wire plus the maximum increase due to the polyester glass fiber covering.

NOTE II– The increase in thickness due to the heavy film insulation shall be in accordance with the applicable section for film insulated wire in Part 2.

NOTE III–The increase in thickness due to the single glass fiber covering shall be determined by subtracting 0.005 inch (0.127 mm) (maximum thickness of film coating) from the maximum increase in thickness given in the table.

NOTE IV–The increase in width due to the glass fiber covering shall be equal to or less than the maximum increase in thickness given in the table. Note I applies to the increase in width as well as the increase in thickness.

NOTE V– Because it is impossible to accurately separate the glass fiber covering from the film insulation, the total minimum increase in the thickness of the film glass fiber covered rectangular wire shall be the sum of the minimum increase due to the film insulated (as shown for film insulated wire in Part 2) and the minimum increase due to the glass fiber covering. The total minimum increase shall be not less than 70 percent of the maximum increase given in the table above, rounded to the nearest 0.001 inch (0.025 mm).

Copyright National Electrical Manufacturers Association
Provided by IHS under license with NEMA
No reproduction or networking permitted without license from IHS

Not for Resale

SINGLE GLASS FIBER COVERED, HEAVY FILM INSULATED SQUARE COPPER MAGNET WIRE THERMAL CLASS 155

Minimum Increase and Maximum Overall Dimensions Due to Heavy Film Insulation, Single Glass Fiber Covering and Treating Varnish

Table SSQ (MW 42-C) Inches

Square AWG Size	Bare Wire Dimensions			Nominal Radii ± 25%	Heavy-Film-Coated Single-Glass-Covered	
	Minimum inches	Nominal inches	Maximum inches	inches	Minimum Increase inches	Maximum Overall inches
0	0.3219	0.3249	0.3279	0.040	0.011	0.344
1	0.2864	0.2893	0.2922	0.040	0.010	0.307
2	0.2550	0.2576	0.2602	0.040	0.010	0.275
3	0.2271	0.2294	0.2317	0.040	0.010	0.247
4	0.2023	0.2043	0.2063	0.040	0.010	0.221
5	0.1801	0.1819	0.1837	0.040	0.009	0.198
6	0.1604	0.1620	0.1636	0.032	0.009	0.178
7	0.1429	0.1443	0.1457	0.032	0.009	0.159
8	0.1272	0.1285	0.1298	0.032	0.009	0.143
9	0.1133	0.1144	0.1155	0.026	0.009	0.129
10	0.1009	0.1019	0.1029	0.026	0.009	0.116
11	0.0897	0.0907	0.0917	0.020	0.008	0.104
12	0.0798	0.0808	0.0818	0.020	0.008	0.094
13	0.0710	0.0720	0.0730	0.016	0.008	0.085
14	0.0631	0.0641	0.0651	0.016	0.008	0.077

Table SSQ (MW 42-C) mm

Square AWG Size	Bare Wire Dimensions			Nominal Radii ± 25%	Heavy-Film-Coated Single-Glass-Covered	
	Minimum mm	Nominal mm	Maximum mm	mm	Minimum Increase mm	Maximum Overall mm
0	8.176	8.252	8.329	1.02	0.279	8.738
1	7.275	7.348	7.422	1.02	0.254	7.798
2	6.477	6.543	6.609	1.02	0.254	6.985
3	5.768	5.827	5.885	1.02	0.254	6.274
4	5.138	5.189	5.240	1.02	0.254	5.613
5	4.575	4.620	4.666	1.02	0.229	5.029
6	4.074	4.115	4.155	0.81	0.229	4.521
7	3.630	3.665	3.701	0.81	0.229	4.039
8	3.231	3.264	3.297	0.81	0.229	3.632
9	2.878	2.906	2.934	0.66	0.229	3.277
10	2.563	2.588	2.614	0.66	0.229	2.946
11	2.278	2.304	2.329	0.51	0.203	2.642
12	2.027	2.052	2.078	0.51	0.203	2.388
13	1.803	1.829	1.854	0.41	0.203	2.159
14	1.603	1.628	1.654	0.41	0.203	1.956

Copyright National Electrical Manufacturers Association
Provided by IHS under license with NEMA
No reproduction or networking permitted without license from IHS

Not for Resale

Copyright National Electrical Manufacturers Association
Provided by IHS under license with NEMA
No reproduction or networking permitted without license from IHS

Not for Resale

MW 42-C (Double)
DOUBLE GLASS FIBER COVERED, BARE OR HEAVY FILM INSULATED *RECTANGULAR AND SQUARE COPPER MAGNET WIRE THERMAL CLASS 155*

INSULATING MATERIALS The glass fiber shall be electrical grade continuous filament glass yarn. If an underlying film insulation is used, it shall have at least a Class 130 rating. The glass fiber covering shall be wrapped firmly, closely, evenly, and continuously around the wire. Adjacent layers shall be wound in opposite directions. The glass fiber covering shall be treated with an insulating varnish to provide a tough outer finish.

THERMAL CLASS 155°C as defined in Part 3, para. 3.58.2.

GENERAL REQUIREMENTS See Part 1.

Properties	Test Procedure, See Part 3, Paragraph	Requirements
DIMENSIONS	3.2.2.2	Rectangular Wire: a. Radii—see Table 1-13 b. Thickness and width tolerances—see Table 1-14 c Dimensions and increase in thickness—see Table DTW-1 and DTW-2 (MW 42-C) Square wire: a. Radii—see Table DSQ (MW 42-C) b. Bare size, increase due to insulation—see Table DSQ (MW 42-C)
ADHERENCE AND FLEXIBILITY	3.3.5	Not less than 75 volts/mil (2950 v/mm) of minimum thickness of the glass-fiber covering on one side [one-half the minimum calculated from Table DTW (MW 42-C) for rectangular or Table DSQ (MW 42-C) for square wire.]
	3.3.3	No cracks visible in the film coating after 20 percent elongation. Examine with normal vision and without removal of glass fiber covering
ELONGATION	3.4	Not less than 32 percent for thicknesses of 0.049 inch (1.25 mm) and greater or 30 percent for thicknesses less than 0.049 inch (1.25 mm)
SPRINGBACK	3.7.2	Not greater than 5° for Glass Fiber Insulated Bare Not greater than 5.5° for Glass Fiber Covered Heavy Film Insulated
DIELECTRIC STRENGTH	3.8.2	Not less than 90 volts/mil (3543 v/mm) of the minimum thickness of the glass fiber covering on one side [one half the minimum calculated from Table DTW1, DTW-2 or DSQ (MW 42-C) plus the minimum breakdown given in the applicable product section for the film insulated wire.

Copyright National Electrical Manufacturers Association
Provided by IHS under license with NEMA
No reproduction or networking permitted without license from IHS

Not for Resale

TABLE DTW-1 (MW 42-C)
DOUBLE GLASS FIBER COVERED, BARE OR HEAVY FILM INSULATED RECTANGULAR AND SQUARE COPPER MAGNET WIRE THERMAL CLASS 155

Maximum Increase in Thickness, Inches (mm), Due to Double Glass-fiber Insulation and Treating Varnish, Rectangular Wire

Nominal Thickness		Nominal Width																												Nominal Thickness	
		2.00	2.12	2.24	2.37	2.50	2.65	2.80	3.00	3.15	3.35	3.55	3.75	4.00	4.25	4.50	4.75	5.00	5.30	5.60	6.00	6.30	6.70	7.10	7.50	8.00	8.50	9.00	9.50	10.0	10.6	11.2	11.8	12.5	Millimeters	
	Inches	0.079	±0.083	0.088	±0.093	0.098	±0.104	0.110	±0.118	0.124	±0.132	0.140	±0.148	0.157	±0.167	0.177	±0.187	0.197	±0.209	0.220	±0.236	0.248	±0.264	0.280	±0.295	0.315	±0.335	0.354	±0.374	0.394	±0.417	0.441	±0.465	0.492	Inches	
0.63	0.025	0.012" (0.305 mm)						0.013" (0.330 mm)				0.014" (0.356 mm)						0.015" (0.381 mm)				0.016" (0.406 mm)				0.018" (0.457 mm)									0.025	0.63
0.71	0.028																																		0.028	0.71
0.80	0.031																																		0.031	0.80
0.90	0.035																																		0.035	0.90
1.00	0.039																																		0.039	1.00
1.12	0.044																																		0.044	1.12
1.25	0.049																																		0.049	1.25
1.40	0.055																																		0.055	1.40
1.60	0.063																																		0.063	1.60
1.80	0.071																																		0.071	1.80
2.00	0.079																																		0.079	2.00
2.24	0.088																																		0.088	2.24
2.50	0.098																																		0.098	2.50
2.80	0.110																																		0.110	2.80
3.15	0.124																																		0.124	3.15
3.55	0.140																																		0.140	3.55
4.00	0.157																																		0.157	4.00
4.50	0.177																																		0.177	4.50
5.00	0.197																																		0.197	5.00
5.60	0.220																																		0.220	5.60

0.017" (0.432 mm)

0.019" (0.483 mm)

R-40 Series Intermediate Number.

EXAMPLE - Preferred Size.....0.055 x 0.110 (R-20 x R-20)
Intermediate Size.....0.055 x 0.118 (R-20 x R-40)

NOTE I– The maximum increase due to the glass fiber covering shall be permitted to be exceeded provided the overall dimension of the covered wire does not exceed the sum of the maximum thickness of the bare wire plus the maximum increase due to the glass fiber covering.

NOTE II– The minimum increase due to the glass fiber covering shall be not less than 70 percent of the maximum shown in the table above, rounded to the nearest 0.001 inch (0.025 mm).

NOTE III–The increase in width due to the glass fiber insulation shall be equal to or less than the maximum increase in thickness given in the table. Note I applies to the increase in width as well as the increase in thickness.

Copyright National Electrical Manufacturers Association
Provided by IHS under license with NEMA
No reproduction or networking permitted without license from IHS

Not for Resale

TABLE DTW-2 (MW 42-C)
DOUBLE GLASS FIBER COVERED, HEAVY FILM INSULATED RECTANGULAR COPPER MAGNET WIRE THERMAL CLASS 155

Maximum Increase in Thickness, Inches (mm), Due to Heavy Film Insulation, Double Glass-Fiber Covering and Treating Varnish, Rectangular Wire

Nominal Thickness		Nominal Width																									Nominal Thickness	
		2.00	2.12	2.24	2.37	2.50	2.65	2.80	3.00	3.15	3.35	3.55	3.75	4.00	4.25	4.50	4.75	5.00	5.30	5.60	6.00	6.30	6.70	7.10	7.50	8.00	8.50	9.00	9.50	10.0	10.6	11.2	11.8	12.5	Millimeters	
	Inches	0.079	±0.083	0.088	±0.093	0.098	±0.104	0.110	±0.118	0.124	±0.132	0.140	±0.148	0.157	±0.167	0.177	±0.187	0.197	±0.209	0.220	±0.236	0.248	±0.264	0.280	±0.295	0.315	±0.335	0.354	±0.374	0.394	±0.417	0.441	±0.465	0.492	Inches	
0.63	0.025	0.017" (0.432 mm)							0.018" (0.457 mm)				0.019" (0.483 mm)						0.020" (0.508 mm)				0.021" (0.533 mm)						0.023" (0.584 mm)						0.025	0.63
0.71	0.028																																		0.028	0.71
0.80	0.031																																		0.031	0.80
0.90	0.035																																		0.035	0.90
1.00	0.039																																		0.039	1.00
1.12	0.044																																		0.044	1.12
1.25	0.049																																		0.049	1.25
1.40	0.055																																		0.055	1.40
1.60	0.063																																		0.063	1.60
1.80	0.071																																		0.071	1.80
2.00	0.079																																		0.079	2.00
2.24	0.088																																		0.088	2.24
2.50	0.098																																		0.098	2.50
2.80	0.110																							0.022" (0.559 mm)											0.110	2.80
3.15	0.124																																		0.124	3.15
3.55	0.140																																		0.140	3.55
4.00	0.157																																		0.157	4.00
4.50	0.177																																		0.177	4.50
5.00	0.197																																		0.197	5.00
5.60	0.220																																		0.220	5.60

0.024" (0.610 mm)

R-40 Series Intermediate Number.

EXAMPLE - Preferred Size.....0.055 x 0.110 (R-20 x R-20)
Intermediate Size.....0.055 x 0.118 (R-20 x R-40)

NOTE I– The maximum increase due to the glass fiber covering shall be permitted to be exceeded provided the overall dimension of the covered wire does not exceed the sum of the maximum thickness of the bare wire plus the maximum increase given in Table DTW-2 (MW 42-C).

NOTE II– The maximum increase due to the heavy film insulation shall be in accordance with the applicable section for film insulated wire in Part 2.

NOTE III– The minimum increase due to the glass fiber covering shall be not less than 70 percent of the maximum shown in the Table DTW-1 (MW 42-C), rounded to the nearest 0.001 inch (0.025 mm).

NOTE IV–The increase in width due to the glass fiber covering shall be equal to or less than the maximum increase in thickness given in Table DTW-1 (MW 42-C). Note I applies to the increase in width as well as the increase in thickness.

NOTE V– Because it is impossible to accurately separate the glass fiber covering from the film insulation, the total minimum increase in the thickness of a film coated glass fiber covered rectangular wire shall be the sum of the minimum increase due to the film insulation (as shown for film insulated wire in Part 2) and the minimum increase due to the polyester fiber covering. The total minimum increase shall be not less than 70 percent of the maximum increase given in Table DTW-1 (MW 42-C) plus the minimum for the film insulated wire, rounded to the nearest 0.001 inch (0.025 mm).

Copyright National Electrical Manufacturers Association
Provided by IHS under license with NEMA
No reproduction or networking permitted without license from IHS

Not for Resale

DOUBLE GLASS FIBER COVERED, BARE OR HEAVY FILM INSULATED SQUARE COPPER MAGNET WIRE THERMAL CLASS 155

Minimum Increase and Maximum Overall Dimensions Due to Glass Fiber Covering and Treating Varnish

Table DSQ (MW 42-C) Inches

Square AWG Size	Bare Wire Dimensions			Nominal	Bare Double-glass-covered		Heavy-film-coated Double-glass-covered	
	Minimum inches	Nominal inches	Maximum inches	Radii ± 25% inches	Minimum Increase inches	Maximum Overall inches	Minimum Increase* inches	Maximum Overall inches
0	0.3219	0.3249	0.3279	0.040	0.013	0.346	0.016	0.351
1	0.2864	0.2893	0.2922	0.040	0.012	0.309	0.015	0.314
2	0.2550	0.2576	0.2602	0.040	0.012	0.277	0.015	0.282
3	0.2271	0.2294	0.2317	0.040	0.011	0.248	0.014	0.253
4	0.2023	0.2043	0.2063	0.040	0.011	0.222	0.014	0.227
5	0.1801	0.1819	0.1837	0.040	0.011	0.199	0.014	0.204
6	0.1604	0.1620	0.1636	0.032	0.011	0.179	0.014	0.184
7	0.1429	0.1443	0.1457	0.032	0.010	0.160	0.013	0.165
8	0.1272	0.1285	0.1298	0.032	0.010	0.144	0.013	0.149
9	0.1133	0.1144	0.1155	0.026	0.009	0.129	0.012	0.134
10	0.1009	0.1019	0.1029	0.026	0.009	0.116	0.012	0.121
11	0.0897	0.0907	0.0917	0.020	0.008	0.104	0.011	0.109
12	0.0798	0.0808	0.0818	0.020	0.008	0.094	0.011	0.099
13	0.0710	0.0720	0.0730	0.016	0.008	0.085	0.011	0.090
14	0.0631	0.0641	0.0651	0.016	0.008	0.077	0.011	0.082

* Minimum increase including film insulation

Table DSQ (MW 42-C) mm

Square AWG Size	Bare Wire Dimensions			Nominal	Bare Double-glass-covered		Heavy-film-insulated Double-glass-covered	
	Minimum mm	Nominal mm	Maximum mm	Radii ± 25% mm	Minimum Increase mm	Maximum Overall mm	Minimum Increase* mm	Maximum Overall mm
0	8.176	8.252	8.329	1.02	0.330	8.788	0.406	8.915
1	7.275	7.348	7.422	1.02	0.305	7.849	0.381	7.976
2	6.477	6.543	6.609	1.02	0.305	7.036	0.381	7.163
3	5.768	5.827	5.885	1.02	0.279	6.299	0.356	6.426
4	5.138	5.189	5.240	1.02	0.279	5.639	0.356	5.766
5	4.575	4.620	4.666	1.02	0.279	5.055	0.356	5.182
6	4.074	4.115	4.155	0.81	0.279	4.547	0.356	4.674
7	3.630	3.665	3.701	0.81	0.254	4.064	0.33	4.191
8	3.231	3.264	3.297	0.81	0.254	3.658	0.33	3.785
9	2.878	2.906	2.934	0.66	0.229	3.277	0.305	3.404
10	2.563	2.588	2.614	0.66	0.229	2.946	0.305	3.073
11	2.278	2.304	2.329	0.51	0.203	2.642	0.279	2.769
12	2.027	2.052	2.078	0.51	0.203	2.388	0.279	2.515
13	1.803	1.829	1.854	0.41	0.203	2.159	0.279	2.286
14	1.603	1.628	1.654	0.41	0.203	1.956	0.279	2.083

* Minimum increase including film insulation

Copyright National Electrical Manufacturers Association
Provided by IHS under license with NEMA
No reproduction or networking permitted without license from IHS

Not for Resale

MW 43-C (Single)
SINGLE GLASS FIBER COVERED SILICONE TREATED HEAVY FILM INSULATED RECTANGULAR AND SQUARE COPPER MAGNET WIRE THERMAL CLASS 200

INSULATING MATERIALS The glass fiber shall be electrical grade continuous filament glass yarn. The underlying film coating shall have at least a Class 180 rating. The glass fiber covering shall be wrapped firmly, closely, evenly, and continuously around the wire. The glass fiber covering shall be treated with a modified silicone insulating varnish or silicone compound to provide a tough outer finish. If a tracer is used, one or more ends of glass yarn shall be black or green, and the dye or pigment used for this purpose shall be sufficiently stable so as to retain its color identity after the silicone treatment and subsequent baking.

THERMAL CLASS 200°C as defined in Part 3, para. 3.58.2.

GENERAL REQUIREMENTS See Part 1.

Properties	Test Procedure, See Part 3, Paragraph	Requirements
DIMENSIONS	3.2.2.2	Rectangular Wire: a. Radii—see Table 1-13 b. Thickness and width tolerances—see Table 1-14 c. Dimensions and increase in thickness—see Table STW (MW 43-C) Square Wire: a. Radii—see Table SSQ (MW 43-C) b. Bare size, increase due to insulation—see Table SSQ (MW 43-C)
ADHERENCE AND FLEXIBILITY	3.3.3	No cracks visible in the film coating after 20 percent elongation. Examine with normal vision and without removal of glass fiber covering
ELONGATION	3.4	Not less than 32 percent for thicknesses of 0.049 inch (1.25 mm) and greater or 30 percent for thicknesses less than 0.049 inch (1.25 mm)
SPRINGBACK	3.7.2	Not greater than 5.5°
DIELECTRIC STRENGTH	3.8.2	Not less than 90 volts/mil (3543 v/mm) of the minimum thickness of the polyester glass fiber covering on one side [one half the minimum calculated from Table STW (MW 43-C) or Table SSQ (MW 43-C)] plus the minimum breakdown given in Part 2 for the film insulated wire

Copyright National Electrical Manufacturers Association
Provided by IHS under license with NEMA
No reproduction or networking permitted without license from IHS

Not for Resale

Table STW (MW 43-C)
SINGLE GLASS FIBER COVERED SILICONE TREATED HEAVY FILM INSULATED RECTANGULAR COPPER MAGNET WIRE THERMAL CLASS 200

Maximum Increase in Thickness, Inches (mm), Due to Single Glass Fiber Covering, Heavy Film Insulation and Silicone Varnish, Rectangular Wire

Nominal Thickness		Nominal Width																									Nominal Thickness	
		2.00	2.12	2.24	2.37	2.50	2.65	2.80	3.00	3.15	3.35	3.55	3.75	4.00	4.25	4.50	4.75	5.00	5.30	5.60	6.00	6.30	6.70	7.10	7.50	8.00	8.50	9.00	9.50	10.0	10.6	11.2	11.8	12.5	Millimeters	
	Inches	0.079	†0.083	0.088	†0.093	0.098	†0.104	0.110	†0.118	†0.124	†0.132	0.140	†0.148	0.157	†0.167	0.177	†0.187	0.197	†0.209	0.220	†0.236	0.248	†0.264	0.280	†0.295	0.315	†0.335	0.354	†0.374	0.394	†0.417	0.441	†0.465	0.492	Inches	
0.63	0.025	0.012" (0.305 mm)							0.013" (0.330 mm)										0.014" (0.356mm)		0.015" (0.381 mm)							0.016" (0.406 mm)							0.025	0.63
0.71	0.028																																		0.028	0.71
0.80	0.031																																		0.031	0.80
0.90	0.035																																		0.035	0.90
1.00	0.039																																		0.039	1.00
1.12	0.044																																		0.044	1.12
1.25	0.049																																		0.049	1.25
1.40	0.055																																		0.055	1.40
1.60	0.063																																		0.063	1.60
1.80	0.071																																		0.071	1.80
2.00	0.079																																		0.079	2.00
2.24	0.088																																		0.088	2.24
2.50	0.098																																		0.098	2.50
2.80	0.110																																		0.110	2.80
3.15	0.124																																		0.124	3.15
3.55	0.140																																		0.140	3.55
4.00	0.157																																		0.157	4.00
4.50	0.177																																		0.177	4.50
5.00	0.197																																		0.197	5.00
5.60	0.220																																		0.220	5.60

R-40 Series Intermediate Number.

EXAMPLE – Preferred Size.....0.055 x 0.110 (R-20 x R-20)
Intermediate Size.....0.055 x 0.118 (R-20 x R-40)

NOTE I– The maximum increase due to the glass fiber covering shall be permitted to be exceeded provided the overall dimension of the covered wire does not exceed the sum of the maximum thickness of the bare wire plus the maximum increase due to the polyester glass fiber covering.

NOTE II– The increase in thickness due to the heavy film insulation shall be in accordance with the applicable section for film-insulated wire in Part 2.

NOTE III–The increase in thickness due to the single glass fiber covering shall be determined by subtracting 0.005 inch (0.127 mm) (maximum thickness of film insulation) from the maximum increase in thickness given in the table.

NOTE IV–The increase in width due to the glass fiber covering shall be equal to or less than the maximum increase in thickness given in the table. Note I applies to the increase in width as well as the increase in thickness.

NOTE V– Because it is impossible to accurately separate the glass fiber covering from the film insulation, the total minimum increase in the thickness of the film glass fiber covered rectangular wire shall be the sum of the minimum increase due to the film insulation (as shown for film-insulated wire in Part 2) and the minimum increase due to the glass fiber covering. The total minimum increase shall be not less than 70 percent of the maximum increase given in the table above, rounded to the nearest 0.001 inch (0.025 mm).

Copyright National Electrical Manufacturers Association
Provided by IHS under license with NEMA
No reproduction or networking permitted without license from IHS

Not for Resale

SINGLE GLASS FIBER COVERED SILICONE TREATED, HEAVY FILM INSULATED SQUARE COPPER MAGNET WIRE THERMAL CLASS 200

Minimum Increase and Maximum Overall Dimensions Due to Heavy Film Insulation, Single Glass Fiber Covering and Silicone Varnish

Table SSQ (MW 43-C) Inches

Square AWG Size	Bare Wire Dimensions			Nominal Radii ± 25%	Heavy film coated single glass covered	
	Minimum	Nominal	Maximum		Minimum Increase	Maximum Overall
0	0.3219	0.3249	0.3279	0.040	0.011	0.344
1	0.2864	0.2893	0.2922	0.040	0.010	0.307
2	0.2550	0.2576	0.2602	0.040	0.010	0.275
3	0.2271	0.2294	0.2317	0.040	0.010	0.247
4	0.2023	0.2043	0.2063	0.040	0.010	0.221
5	0.1801	0.1819	0.1837	0.040	0.009	0.198
6	0.1604	0.1620	0.1636	0.032	0.009	0.178
7	0.1429	0.1443	0.1457	0.032	0.009	0.159
8	0.1272	0.1285	0.1298	0.032	0.009	0.143
9	0.1133	0.1144	0.1155	0.026	0.009	0.129
10	0.1009	0.1019	0.1029	0.026	0.009	0.116
11	0.0897	0.0907	0.0917	0.020	0.008	0.104
12	0.0798	0.0808	0.0818	0.020	0.008	0.094
13	0.0710	0.0720	0.0730	0.016	0.008	0.085
14	0.0631	0.0641	0.0651	0.016	0.008	0.077

Table SSQ (MW 43-C) mm

Square AWG Size	Bare Wire Dimensions			Nominal Radii ± 25%	Heavy film coated single glass covered	
	Minimum	Nominal	Maximum		Minimum Increase	Maximum Overall
0	8.176	8.252	8.329	1.02	0.279	8.738
1	7.275	7.348	7.422	1.02	0.254	7.798
2	6.477	6.543	6.609	1.02	0.254	6.985
3	5.768	5.827	5.885	1.02	0.254	6.274
4	5.138	5.189	5.240	1.02	0.254	5.613
5	4.575	4.620	4.666	1.02	0.229	5.029
6	4.074	4.115	4.155	0.81	0.229	4.521
7	3.630	3.665	3.701	0.81	0.229	4.039
8	3.231	3.264	3.297	0.81	0.229	3.632
9	2.878	2.906	2.934	0.66	0.229	3.277
10	2.563	2.588	2.614	0.66	0.229	2.946
11	2.278	2.304	2.329	0.51	0.203	2.642
12	2.027	2.052	2.078	0.51	0.203	2.388
13	1.803	1.829	1.854	0.41	0.203	2.159
14	1.603	1.628	1.654	0.41	0.203	1.956

Copyright National Electrical Manufacturers Association
Provided by IHS under license with NEMA
No reproduction or networking permitted without license from IHS

Not for Resale

Copyright National Electrical Manufacturers Association
Provided by IHS under license with NEMA
No reproduction or networking permitted without license from IHS

Not for Resale

MW 43-C (Double)
DOUBLE GLASS FIBER COVERED SILICONE TREATED BARE OR HEAVY FILM INSULATED RECTANGULAR AND SQUARE COPPER MAGNET WIRE THERMAL CLASS 200

INSULATING MATERIALS The glass fiber shall be electrical grade continuous filament glass yarn. If an underlying film coating is used, it shall have at least a Class 180 rating. The glass fiber covering shall be wrapped firmly, closely, evenly, and continuously around the wire. Adjacent layers shall be wound in opposite directions. The glass fiber covering shall be treated with a modified silicone insulating varnish or silicone compound to provide a tough outer finish. If a tracer is used, one or more ends of glass yarn in the outer layer shall be black or green, and the die or pigment used for this purpose shall be sufficiently stable so as to retain its color identity after the silicone treatment and subsequent baking.

THERMAL CLASS 200°C as defined in Part 3, para. 3.58.2.

GENERAL REQUIREMENTS See Part 1.

Properties	Test Procedure, See Part 3, Paragraph	Requirements
DIMENSIONS	3.2.2.2	Rectangular Wire: a. Radii—see Table 1-13 b. Thickness and width tolerances—see Table 1-14 c. Dimensions and increase in thickness—see Table DTW-1 and DTW-2 (MW 43-C) Square wire: a. Radii—see Table DSQ (MW 43-C) b. Bare size, increase due to insulation—see Table DSQ (MW 43-C)
ADHERENCE AND FLEXIBILITY	3.3.5	Not less than 75 volts/mil (2950 v/mm) of minimum thickness of the polyester glass fiber covering on one side [one-half the minimum calculated from Tables DTW-1, DTW-2 or DSQ (MW 43-C)] over bare wire.
	3.3.3	No cracks visible in the film coating after 20 percent elongation. Examine with normal vision and without removal of glass fiber covering
ELONGATION	3.4	Not less than 32 percent for thicknesses of 0.049 inch (1.25 mm) and greater or 30 percent for thicknesses less than 0.049 inch (1.25 mm)
SPRINGBACK	3.7.2	Not greater than 5° for Glass Fiber Covered Bare Not greater than 5.5° for Glass Fiber Covered Heavy Film Insulated
DIELECTRIC STRENGTH	3.8.2	Not less than 90 volts/mil (3543 v/mm) of the minimum thickness of the polyester glass fiber covering on one side [one half the minimum calculated from Tables DTW-1, DTW-2, or DSQ (MW 43-C) plus the minimum breakdown given in Part 2 for the film insulated wire

Copyright National Electrical Manufacturers Association
Provided by IHS under license with NEMA
No reproduction or networking permitted without license from IHS

Not for Resale

TABLE DTW-1 (MW 43-C)
DOUBLE GLASS FIBER COVERED SILICONE TREATED, BARE RECTANGULAR COPPER MAGNET WIRE THERMAL CLASS 200

Maximum Increase in Thickness, Inches (mm), Due to Double Glass-Fiber Covering and Silicone Varnish, Rectangular Wire

Nominal Thickness		Nominal Width																													Nominal Thickness	
		2.00	2.12	2.24	2.37	2.50	2.65	2.80	3.00	3.15	3.35	3.55	3.75	4.00	4.25	4.50	4.75	5.00	5.30	5.60	6.00	6.30	6.70	7.10	7.50	8.00	8.50	9.00	9.50	10.0	10.6	11.2	11.8	12.5	Millimeters	
	Inches	0.079	±0.063	0.088	±0.093	0.098	±0.104	0.110	±0.118	0.124	±0.132	0.140	±0.148	0.157	±0.167	0.177	±0.187	0.197	±0.209	0.220	±0.236	0.248	±0.264	0.280	±0.295	0.315	±0.335	0.354	±0.374	0.394	±0.417	0.441	±0.465	0.492	Inches	
0.63	0.025	0.012" (0.305 mm)							0.013" (0.330 mm)				0.014" (0.356 mm)				0.015" (0.381 mm)				0.016" (0.406 mm)				0.018" (0.457 mm)										0.025	0.63
0.71	0.028																																		0.028	0.71
0.80	0.031																																		0.031	0.80
0.90	0.035																																		0.035	0.90
1.00	0.039																																		0.039	1.00
1.12	0.044																																		0.044	1.12
1.25	0.049																																		0.049	1.25
1.40	0.055																																		0.055	1.40
1.60	0.063																																		0.063	1.60
1.80	0.071																																		0.071	1.80
2.00	0.079																																		0.079	2.00
2.24	0.088																																		0.088	2.24
2.50	0.098																																		0.098	2.50
2.80	0.110																							0.017" (0.432 mm)											0.110	2.80
3.15	0.124																																0.019" (0.483 mm)		0.124	3.15
3.55	0.140																																		0.140	3.55
4.00	0.157																																		0.157	4.00
4.50	0.177																																		0.177	4.50
5.00	0.197																																		0.197	5.00
5.60	0.220																																		0.220	5.60

R-40 Series Intermediate Number.

EXAMPLE - Preferred Size..... 0.055 x 0.110 (R-20 x R-20)
Intermediate Size.....0.055 x 0.118 (R-20 x R-40)

NOTE I– The maximum increase due to the glass fiber covering shall be permitted to be exceeded provided the overall dimension of the covered wire does not exceed the sum of the maximum thickness of the bare wire plus the maximum increase given in Table DTW-2 (MW 43-C).

NOTE II– The increase in thickness due to the glass fiber covering shall be not less than 70 percent of the maximum shown in the table above, rounded to the nearest 0.001 inch (0.025 mm).

NOTE III–The increase in width due to the glass fiber covering shall be equal to or less than the maximum increase in thickness given in the table. Note I applies to the increase in width as well as the increase in thickness.

Copyright National Electrical Manufacturers Association
Provided by IHS under license with NEMA
No reproduction or networking permitted without license from IHS

Not for Resale

TABLE DTW-2 (MW 43-C)
DOUBLE GLASS FIBER COVERED SILICONE TREATED, HEAVY FILM INSULATED RECTANGULAR COPPER MAGNET WIRE THERMAL CLASS 200

Maximum Increase in Thickness, Inches (mm), Due to Heavy Film Insulation, Double Glass-Fiber Covering and Silicone Varnish, Rectangular Wire

Nominal Thickness		Nominal Width																													Nominal Thickness	
		2.00	2.12	2.24	2.37	2.50	2.65	2.80	3.00	3.15	3.35	3.55	3.75	4.00	4.25	4.50	4.75	5.00	5.30	5.60	6.00	6.30	6.70	7.10	7.50	8.00	8.50	9.00	9.50	10.0	10.6	11.2	11.8	12.5	Millimeters	
	Inches	0.079	†0.083	0.088	†0.093	0.098	†0.104	0.110	†0.118	0.124	†0.132	0.140	†0.148	0.157	†0.167	0.177	†0.187	0.197	†0.209	0.220	†0.236	0.248	†0.264	0.280	†0.295	0.315	†0.335	0.354	†0.374	0.394	†0.417	0.441	†0.465	0.492	Inches	
0.63	0.025	0.017" (0.432 mm)							0.018" (0.457 mm)				0.019" (0.483 mm)					0.020" (0.508 mm)					0.021" (0.533 mm)						0.023" (0.584 mm)						0.025	0.63
0.71	0.028																																		0.028	0.71
0.80	0.031																																		0.031	0.80
0.90	0.035																																		0.035	0.90
1.00	0.039																																		0.039	1.00
1.12	0.044																																		0.044	1.12
1.25	0.049																																		0.049	1.25
1.40	0.055																																		0.055	1.40
1.60	0.063																																		0.063	1.60
1.80	0.071																																		0.071	1.80
2.00	0.079																																		0.079	2.00
2.24	0.088																																		0.088	2.24
2.50	0.098																																		0.098	2.50
2.80	0.110																							0.022" (0.559 mm)									0.024" (0.610 mm)		0.110	2.80
3.15	0.124																																		0.124	3.15
3.55	0.140																																		0.140	3.55
4.00	0.157																																		0.157	4.00
4.50	0.177																																		0.177	4.50
5.00	0.197																																		0.197	5.00
5.60	0.220																																		0.220	5.60

R-40 Series Intermediate Number.

EXAMPLE - Preferred Size.....0.055 x 0.110 (R-20 x R-20)
Intermediate Size.....0.055 x 0.118 (R-20 x R-40)

NOTE I– The maximum increase due to the glass fiber covering shall be permitted to be exceeded provided the overall dimension of the covered wire does not exceed the sum of the maximum thickness of the bare wire plus the maximum increase given in Table DTW-2 (MW 43-C).

NOTE II– The maximum increase due to the heavy film insulation shall be in accordance with the applicable section for film insulated wire in Part 2.

NOTE III–The minimum increase due to the glass fiber covering shall be not less than 70 percent of the maximum shown in the Table DTW-1 (MW 43-C), rounded to the nearest 0.001 inch (0.025 mm).

NOTE IV–The increase in width due to the glass fiber covering shall be equal to or less than the maximum increase in thickness given in Table DTW-1 (MW 43-C). Note I applies to the increase in width as well as the increase in thickness.

NOTE V– Because it is impossible to accurately separate the glass fiber covering from the film insulation, the total minimum increase in the thickness of a film coated glass fiber covered rectangular wire shall be the sum of the minimum increase due to the film insulation (as shown for film insulated wire in Part 2) and the minimum increase due to the polyester fiber covering. The total minimum increase shall be not less than 70 percent of the maximum increase given in Table DTW-1 (MW 43-C) plus the minimum for the film insulated wire, rounded to the nearest 0.001 inch (0.025 mm).

Copyright National Electrical Manufacturers Association
Provided by IHS under license with NEMA
No reproduction or networking permitted without license from IHS

Not for Resale

DOUBLE GLASS FIBER COVERED SILICONE TREATED, BARE OR HEAVY FILM INSULATED SQUARE COPPER MAGNET WIRE THERMAL CLASS 200

Minimum Increase and Maximum Overall Dimensions Due to Glass Fiber Covering and Silicone Varnish

Table DSQ (MW 43-C) Inches

Square AWG Size	Bare Wire Dimensions			Nominal	Bare Double-glass-covered		Heavy film coated double glass covered	
	Minimum	Nominal	Maximum	Radii ± 25%	Minimum Increase	Maximum Overall	Minimum Increase*	Maximum Overall
0	0.3219	0.3249	0.3279	0.040	0.013	0.346	0.016	0.351
1	0.2864	0.2893	0.2922	0.040	0.012	0.309	0.015	0.314
2	0.2550	0.2576	0.2602	0.040	0.012	0.277	0.015	0.282
3	0.2271	0.2294	0.2317	0.040	0.011	0.248	0.014	0.253
4	0.2023	0.2043	0.2063	0.040	0.011	0.222	0.014	0.227
5	0.1801	0.1819	0.1837	0.040	0.011	0.199	0.014	0.204
6	0.1604	0.1620	0.1636	0.032	0.011	0.179	0.014	0.184
7	0.1429	0.1443	0.1457	0.032	0.010	0.160	0.013	0.165
8	0.1272	0.1285	0.1298	0.032	0.010	0.144	0.013	0.149
9	0.1133	0.1144	0.1155	0.026	0.009	0.129	0.012	0.134
10	0.1009	0.1019	0.1029	0.026	0.009	0.116	0.012	0.121
11	0.0897	0.0907	0.0917	0.020	0.008	0.104	0.011	0.109
12	0.0798	0.0808	0.0818	0.020	0.008	0.094	0.011	0.099
13	0.0710	0.0720	0.0730	0.016	0.008	0.085	0.011	0.090
14	0.0631	0.0641	0.0651	0.016	0.008	0.077	0.011	0.082

* Minimum increase including film insulation

Table DSQ (MW 43-C) mm

Square AWG Size	Bare Wire Dimensions			Nominal	Bare Double-glass-covered		Heavy film coated double glass covered	
	Minimum	Nominal	Maximum	Radii ± 25%	Minimum Increase	Maximum Overall	Minimum Increase*	Maximum Overall
0	8.176	8.252	8.329	1.02	0.330	8.788	0.406	8.915
1	7.275	7.348	7.422	1.02	0.305	7.849	0.381	7.976
2	6.477	6.543	6.609	1.02	0.305	7.036	0.381	7.163
3	5.768	5.827	5.885	1.02	0.279	6.299	0.356	6.426
4	5.138	5.189	5.240	1.02	0.279	5.639	0.356	5.766
5	4.575	4.620	4.666	1.02	0.279	5.055	0.356	5.182
6	4.074	4.115	4.155	0.81	0.279	4.547	0.356	4.674
7	3.630	3.665	3.701	0.81	0.254	4.064	0.330	4.191
8	3.231	3.264	3.297	0.81	0.254	3.658	0.330	3.785
9	2.878	2.906	2.934	0.66	0.229	3.277	0.305	3.404
10	2.563	2.588	2.614	0.66	0.229	2.946	0.305	3.073
11	2.278	2.304	2.329	0.51	0.203	2.642	0.279	2.769
12	2.027	2.052	2.078	0.51	0.203	2.388	0.279	2.515
13	1.803	1.829	1.854	0.41	0.203	2.159	0.279	2.286
14	1.603	1.628	1.654	0.41	0.203	1.956	0.279	2.083

* Minimum increase including film insulation.

Copyright National Electrical Manufacturers Association
Provided by IHS under license with NEMA
No reproduction or networking permitted without license from IHS

Not for Resale

MW 44-C (Single)
SINGLE GLASS FIBER COVERED SILICONE TREATED, BARE OR FILM INSULATED ROUND COPPER MAGNET WIRE THERMAL CLASS 200

INSULATING MATERIALS The glass fiber shall be electrical grade continuous filament glass yarn. If an underlying film insulation is used, it shall have at least a Class 180 rating. The glass fiber covering shall be wrapped firmly, closely, evenly, and continuously around the wire. The glass fiber covering shall be treated with a modified silicone insulating varnish or silicone compound to provide a tough outer finish. If a tracer is used, one or more ends of glass yarn in the outer layer should be black or green, and the dye or pigment used for this purpose shall be sufficiently stable so as to retain its color identity after the silicone treatment and subsequent baking.

THERMAL CLASS 200°C as defined in Part 3, para. 3.58.2.

GENERAL REQUIREMENTS See Part 1.

Properties	Test Procedure, See Part 3, Paragraph	Requirements
DIMENSIONS	3.2.1.3	See Table S (MW 44-C)
ADHERENCE AND FLEXIBILITY	3.3.2	Covering shall not open sufficiently to expose the bare or film insulated wire after bending on mandrel sizes as follows:

AWG Size	Mandrel Diameter
0 and larger	15d
1 to 30	10d

ELONGATION — 3.4 — Not less than the following:

AWG Size	Minimum Elongation Percent	
	With Glass Fiber Covering	Glass Fiber Covering Removed
4/0–0	35.0	35.0
1–8	30.0	30.0
9–15	20.0	30.0
16–21	15.0	25.0
22–28	...	20.0
29 and 30	...	15.0

SPRINGBACK — 3.7.2 — Not greater than 5° for Glass Fiber Covered Bare
Not greater than 5.5° for Glass Fiber Covered Film Insulated

DIELECTRIC STRENGTH — Not less than the following:

	AWG Size	Diameter of Mandrel, Inches	Diameter of Mandrel, mm	Minimum Breakdown, Volts*
3.8.2	9 and larger	...	...	170
3.8.4 or 3.8.5	10–23	1.00	25.4	360
3.8.4 or 3.8.5	24–30	0.25	6.3	225

*For glass fiber covered wire having an underlying film insulation, add the minimum breakdown voltage given in Part 2 for the film coated wire.

Copyright National Electrical Manufacturers Association
Provided by IHS under license with NEMA
No reproduction or networking permitted without license from IHS
Not for Resale

Table S (MW 44-C)
SINGLE GLASS FIBER COVERED SILICONE TREATED, BARE OR FILM INSULATED ROUND COPPER MAGNET WIRE THERMAL CLASS 200

AWG Size	Bare Wire Diameter, Inches †			Minimum Increase in Glass Fiber Covering, Inches †	Maximum Overall Diameter, Inches †			AWG Size
	Minimum	Nominal	Maximum		Bare	Single Film	Heavy Film	
4/0	0.4554	0.4600	0.4646	0.0045		...	...	4/0
3/0	0.4055	0.4096	0.4137	0.0045	0.4207	...	...	3/0
2/0	0.3612	0.3648	0.3684	0.0045	0.3754	...	...	2/0
1/0	0.3217	0.3249	0.3281	0.0045	0.3351	...	...	1/0
1	0.2864	0.2893	0.2922	0.0045	0.2992	...	...	1
2	0.2550	0.2576	0.2602	0.0045	0.2672	...	...	2
3	0.2271	0.2294	0.2317	0.0045	0.2387	...	...	3
4	0.2023	0.2043	0.2053*	0.0045	0.2133	...	0.2168	4
5	0.1801	0.1819	0.1828*	0.0045	0.1907	...	0.1942	5
6	0.1604	0.1620	0.1628*	0.0045	0.1706	...	0.1741	6
7	0.1429	0.1443	0.1450*	0.0045	0.1527	...	0.1561	7
8	0.1272	0.1285	0.1292*	0.0045	0.1368	...	0.1402	8
9	0.1133	0.1144	0.1150*	0.0045	0.1225	...	0.1259	9
10	0.1009	0.1019	0.1024*	0.0040	0.1089	...	0.1121	10
11	0.0898	0.0907	0.0912*	0.0040	0.0976	...	0.1008	11
12	0.0800	0.0808	0.0812*	0.0040	0.0876	...	0.0907	12
13	0.0713	0.0720	0.0724*	0.0040	0.0787	...	0.0817	13
14	0.0635	0.0641	0.0644*	0.0040	0.0707	0.0726	0.0742	14
15	0.0565	0.0571	0.0574*	0.0040	0.0637	0.0654	0.0669	15
16	0.0503	0.0508	0.0511*	0.0040	0.0573	0.0591	0.0605	16
17	0.0448	0.0453	0.0455*	0.0040	0.0518	0.0535	0.0548	17
18	0.0399	0.0403	0.0405*	0.0040	0.0467	0.0484	0.0497	18
19	0.0355	0.0359	0.0361*	0.0040	0.0423	0.0439	0.0451	19
20	0.0317	0.0320	0.0322*	0.0040	0.0383	0.0399	0.0411	20
21	0.0282	0.0285	0.0286*	0.0040	0.0348	0.0363	0.0374	21
22	0.0250	0.0253	0.0254*	0.0040	0.0316	0.0330	0.0341	22
23	0.0224	0.0226	0.0227*	0.0040	0.0288	0.0303	0.0313	23
24	0.0199	0.0201	0.0202*	0.0025	0.0243	0.0257	0.0267	24
25	0.0177	0.0179	0.0180*	0.0025	0.0221	0.0234	0.0243	25
26	0.0157	0.0159	0.0160*	0.0025	0.0201	0.0213	0.0222	26
27	0.0141	0.0142	0.0143	0.0025	0.0183	0.0196	0.0204	27
28	0.0125	0.0126	0.0127	0.0025	0.0167	0.0180	0.0187	28
29	0.0112	0.0113	0.0114	0.0025	0.0154	0.0166	0.0173	29
30	0.0099	0.0100	0.0101	0.0025	0.0141	0.0152	0.0159	30

*This maximum bare wire diameter shall be permitted to be exceeded; see 1.6.7.2.
† For metric equivalent, see Table 1-7.

Copyright National Electrical Manufacturers Association
Provided by IHS under license with NEMA
No reproduction or networking permitted without license from IHS

Not for Resale

MW 44-C (Double)
DOUBLE GLASS FIBER COVERED SILICONE TREATED, BARE OR FILM INSULATED ROUND COPPER MAGNET WIRE THERMAL CLASS 200

INSULATING MATERIALS The glass fiber shall be electrical grade continuous filament glass yarn. If an underlying film insulation is used, it shall have at least a Class 180 rating. The glass fiber covering shall be wrapped firmly, closely, evenly, and continuously around the wire. The glass fiber covering shall be treated with a modified silicone insulating varnish or silicone compound to provide a tough outer finish. If a tracer is used, one or more ends of glass yarn in the outer layer should be black or green, and the dye or pigment used for this purpose shall be sufficiently stable so as to retain its color identity after the silicone treatment and subsequent baking.

THERMAL CLASS 200°C as defined in Part 3, para. 3.58.2.

GENERAL REQUIREMENTS See Part 1.

Properties	Test Procedure, See Part 3, Paragraph	Requirements
DIMENSIONS	3.2.1.3	See Table D (MW 44-C)
ADHERENCE AND FLEXIBILITY	3.3.2	Covering shall not open sufficiently to expose the bare or film insulated wire after bending on mandrel sizes as follows:

AWG Size	Mandrel Diameter
0 and larger	15d
1 to 30	10d

ELONGATION — 3.4 — Not less than the following:

	Minimum Elongation Percent	
AWG Size	With Glass Fiber Covering	Glass Fiber Covering Removed
4/0–0	35.0	35.0
1–8	30.0	30.0
9–15	20.0	30.0
16–21	15.0	25.0
22–28	...	20.0
29 and 30	...	15.0

SPRINGBACK — 3.7.2 — Not greater than 5° for Glass Fiber Covered Bare
Not greater than 5.5° for Glass Fiber Covered Film Insulated

DIELECTRIC STRENGTH — Not less than the following:

	Diameter of Mandrel		
AWG Size	Inches	mm	Brekdown, Volts*
3.8.2 4/0–9	...	...	315
3.8.4 or 3.8.5 10–23	1.00	25.4	540
3.8.4 or 3.8.5 24–30	0.25	6.3	400

*For glass fiber covered wire having an underlying film coating, add the minimum breakdown voltage given in Part 2 for the film insulated wire.

Copyright National Electrical Manufacturers Association
Provided by IHS under license with NEMA
No reproduction or networking permitted without license from IHS

Not for Resale

Table D (MW 44-C)
DOUBLE GLASS FIBER COVERED SILICONE TREATED, BARE OR FILM INSULATED ROUND COPPER MAGNET WIRE THERMAL CLASS 200

AWG Size	Bare Wire Diameter, Inches †			Minimum Increase in Glass Fiber Covering, Inches †	Maximum Overall Diameter, Inches †			AWG Size
	Minimum	Nominal	Maximum		Bare	Single Film	Heavy Film	
4/0	0.4554	0.4600	0.4646	0.0070	0.4756	...	...	4/0
3/0	0.4055	0.4096	0.4137	0.0070	0.4247	...	...	3/0
2/0	0.3612	0.3648	0.3684	0.0070	0.3794	...	...	2/0
1/0	0.3217	0.3249	0.3281	0.0070	0.3391	...	...	1/0
1	0.2864	0.2893	0.2922	0.0070	0.3032	...	...	1
2	0.2550	0.2576	0.2602	0.0070	0.2712	...	...	2
3	0.2271	0.2294	0.2317	0.0070	0.2427	...	...	3
4	0.2023	0.2043	0.2053*	0.0070	0.2173	...	0.2218	4
5	0.1801	0.1819	0.1828*	0.0070	0.1947	...	0.1982	5
6	0.1604	0.1620	0.1628*	0.0070	0.1746	...	0.1781	6
7	0.1429	0.1443	0.1450*	0.0070	0.1567	...	0.1601	7
8	0.1272	0.1285	0.1292*	0.0070	0.1408	...	0.1442	8
9	0.1133	0.1144	0.1150*	0.0070	0.1265	...	0.1299	9
10	0.1009	0.1019	0.1024*	0.0060	0.1119	...	0.1151	10
11	0.0898	0.0907	0.0912*	0.0060	0.1006	...	0.1038	11
12	0.0800	0.0808	0.0812*	0.0060	0.0906	...	0.0937	12
13	0.0713	0.0720	0.0724*	0.0060	0.0817	...	0.0847	13
14	0.0635	0.0641	0.0644*	0.0060	0.0737	0.0726	0.0772	14
15	0.0565	0.0571	0.0574*	0.0060	0.0667	0.0654	0.0699	15
16	0.0503	0.0508	0.0511*	0.0060	0.0603	0.0621	0.0635	16
17	0.0448	0.0453	0.0455*	0.0060	0.0548	0.0565	0.0578	17
18	0.0399	0.0403	0.0405*	0.0060	0.0497	0.0514	0.0527	18
19	0.0355	0.0359	0.0361*	0.0060	0.0453	0.0469	0.0481	19
20	0.0317	0.0320	0.0322*	0.0060	0.0413	0.0429	0.0441	20
21	0.0282	0.0285	0.0286*	0.0060	0.0378	0.0393	0.0404	21
22	0.0250	0.0253	0.0254*	0.0060	0.0346	0.0360	0.0371	22
23	0.0224	0.0226	0.0227*	0.0060	0.0318	0.0333	0.0343	23
24	0.0199	0.0201	0.0202*	0.0045	0.0263	0.0277	0.0287	24
25	0.0177	0.0179	0.0180*	0.0045	0.0241	0.0254	0.0263	25
26	0.0157	0.0159	0.0160*	0.0045	0.0221	0.0233	0.0242	26
27	0.0141	0.0142	0.0143	0.0045	0.0203	0.0216	0.0224	27
28	0.0125	0.0126	0.0127	0.0045	0.0187	0.0200	0.0207	28
29	0.0112	0.0113	0.0114	0.0045	0.0174	0.0186	0.0193	29
30	0.0099	0.0100	0.0101	0.0045	0.0161	0.0172	0.0179	30

* This maximum bare wire diameter shall be permitted to be exceeded; see 1.6.7.2.
† For metric equivalent, see Table 1-8.

Copyright National Electrical Manufacturers Association
Provided by IHS under license with NEMA
No reproduction or networking permitted without license from IHS

Not for Resale

MW 45-C (Single)
SINGLE POLYESTER GLASS FIBER COVERED, BARE OR FILM INSULATED ROUND COPPER MAGNET WIRE THERMAL CLASS 155

INSULATING MATERIALS The fiber covering shall consist of a combination of polyester and glass fibers. The glass fibers shall be electrical grade continuous filament glass yarn. The polyester fiber shall be a high grade yarn resulting from the linear polymerization of ethylene glycol and terephthalic acid. The maximum content by weight of polyester fiber in the yarn shall not exceed 50 percent. If an underlying film insulation is used, it shall have at least a Class 130 rating. The polyester glass fiber covering shall be wrapped firmly, closely, evenly, and continuously around the wire. The polyester glass fiber covering shall be fused; when required it may treated with an insulating varnish of compound to provide a tough outer finish.

THERMAL CLASS 155°C as defined in Part 3, para. 3.58.2.

GENERAL REQUIREMENTS See Part 1.

Properties	Test Procedure, See Part 3, Paragraph	Requirements
DIMENSIONS	3.2.1.3	See Table S (MW 45-C)
ADHERENCE AND FLEXIBILITY	3.3.2	Covering shall not open sufficiently to expose the bare or underlying film insulated wire after bending mandrel sizes as follows:
	3.3.3	After a specimen has been elongated 25% or to its breaking point, whichever is less, there shall be no loosening, fraying or loss of adherence of the covering except at the point of rupture
ELONGATION	3.4	Not less than the following:
SPRINGBACK	3.7.2	Not greater than 5° for Glass Fiber Covered Bare Not greater than 5.5° for Glass Fiber Covered Film Coated
DIELECTRIC STRENGTH	3.8.2 3.8.4 or 3.8.5 3.8.4 or 3.8.5	Not less than the following:

AWG Size	Mandrel Diameter
4/0-9	10d
10–30	5d

AWG Size	Minimum Elongation Percent
4–8	30.0
9–15	20.0
16–21	15.0
22–30	10.0

AWG Size	Diameter of Mandrel Inches	Diameter of Mandrel mm	Minimum Breakdown, Volts*
4/0–9	...	...	150
10–23	1.00	25.4	360
24–30	0.25	6.3	225

*For polyester glass fiber covered wire having an underlying film insulation, add the minimum breakdown voltage given in Part 2 for the film insulated wire.

Copyright National Electrical Manufacturers Association
Provided by IHS under license with NEMA
No reproduction or networking permitted without license from IHS

Not for Resale

Table S (MW 45-C)
SINGLE POLYESTER GLASS FIBER COVERED BARE OR FILM INSULATED ROUND COPPER MAGNET WIRE THERMAL CLASS 155

AWG Size	Bare Wire Diameter, Inches†			Minimum Increase in Glass Fiber Covering, Inches†	Maximum Overall Diameter Inches†			AWG Size
	Minimum	Nominal	Maximum		Bare	Single Film	Heavy Film	
4/0	0.4554	0.4600	0.4646	0.0040	0.4696	...	...	4/0
3/0	0.4055	0.4096	0.4137	0.0040	0.4187	...	...	3/0
2/0	0.3612	0.3648	0.3684	0.0040	0.3734	...	...	2/0
1/0	0.3217	0.3249	0.3281	0.0040	0.3331	...	...	1/0
1	0.2864	0.2893	0.2922	0.0040	0.2992	...	...	1
2	0.2550	0.2576	0.2602	0.0040	0.2672	...	...	2
3	0.2271	0.2294	0.2317	0.0040	0.2367	...	...	3
4	0.2023	0.2043	0.2053*	0.0040	0.2123	...	0.2158	4
5	0.1801	0.1819	0.1828*	0.0040	0.1897	...	0.1932	5
6	0.1604	0.1620	0.1628*	0.0040	0.1696	...	0.1731	6
7	0.1429	0.1443	0.1450*	0.0040	0.1517	...	0.1551	7
8	0.1272	0.1285	0.1292*	0.0040	0.1358	...	0.1392	8
9	0.1133	0.1144	0.1150*	0.0040	0.1215	...	0.1249	9
10	0.1009	0.1019	0.1024*	0.0035	0.1079	...	0.1111	10
11	0.0898	0.0907	0.0912*	0.0035	0.0966	...	0.0998	11
12	0.0800	0.0808	0.0812*	0.0035	0.0866	...	0.0897	12
13	0.0713	0.0720	0.0724*	0.0035	0.0777	...	0.0807	13
14	0.0635	0.0641	0.0644*	0.0035	0.0697	0.0716	0.0732	14
15	0.0565	0.0571	0.0574*	0.0035	0.0627	0.0644	0.0659	15
16	0.0503	0.0508	0.0511*	0.0035	0.0563	0.0581	0.0595	16
17	0.0448	0.0453	0.0455*	0.0035	0.0508	0.0525	0.0538	17
18	0.0399	0.0403	0.0405*	0.0035	0.0457	0.0474	0.0487	18
19	0.0355	0.0359	0.0361*	0.0035	0.0413	0.0429	0.0441	19
20	0.0317	0.0320	0.0322*	0.0035	0.0373	0.0389	0.0401	20
21	0.0282	0.0285	0.0286*	0.0035	0.0338	0.0353	0.0364	21
22	0.0250	0.0253	0.0254*	0.0035	0.0306	0.0320	0.0331	22
23	0.0224	0.0226	0.0227*	0.0035	0.0278	0.0293	0.0303	23
24	0.0199	0.0201	0.0202*	0.0025	0.0253	0.0267	0.0277	24
25	0.0177	0.0179	0.0180*	0.0025	0.0231	0.0244	0.0253	25
26	0.0157	0.0159	0.0160*	0.0025	0.0211	0.0223	0.0232	26
27	0.0141	0.0142	0.0143	0.0025	0.0193	0.0206	0.0214	27
28	0.0125	0.0126	0.0127	0.0025	0.0177	0.0190	0.0197	28
29	0.0112	0.0113	0.0114	0.0025	0.0164	0.0176	0.0183	29
30	0.0099	0.0100	0.0101	0.0025	0.0151	0.0162	0.0169	30

* This maximum bare wire diameter shall be permitted to be exceeded; see 1.6.7.2.
† For metric equivalent, see Table 1-9.

Copyright National Electrical Manufacturers Association
Provided by IHS under license with NEMA
No reproduction or networking permitted without license from IHS

Not for Resale

MW 45-C (Double)
DOUBLE POLYESTER GLASS FIBER COVERED, BARE OR FILM INSULATED ROUND COPPER MAGNET WIRE THERMAL CLASS 155

INSULATING MATERIALS The fiber covering shall consist of a combination of polyester and glass fibers. The glass fibers shall be electrical grade continuous filament glass yarn. The polyester fiber shall be a high grade yarn resulting from the linear polymerization of ethylene glycol and terephthalic acid. The maximum content by weight of polyester fiber in the yarn shall not exceed 50 percent. If an underyling film insulation is used, it shall have at least a Class 130 rating. The polyester glass fiber covering shall be wrapped firmly, closely, evenly, and continuously around the wire. Adjacent layers shall be wound in opposite directions. The polyester glass fiber covering shall be fused; when requried it may be treated with an insulating varnish of compound to provide a tough outer finish.

THERMAL CLASS 155°C as defined in Part 3, para. 3.58.2.

GENERAL REQUIREMENTS See Part 1.

Properties	Test Procedure, See Part 3, Paragraph	Requirements
DIMENSIONS	3.2.1.3	See Table D (MW 45-C)
ADHERENCE AND FLEXIBILITY	3.3.2	Covering shall not open sufficiently to expose the bare or underlying film insulated wire after bending on mandrel sizes as follows:
	3.3.3	After a specimen has been elongated 25 percent or to its breaking point, whichever is less, there shall be no loosening, fraying or loss of adherence of the covering except at the point of rupture
ELONGATION	3.4	Not less than the following:
SPRINGBACK	3.7.2	Not greater than 5° for Glass Fiber Covered Bare Not greater than 5.5° for Glass Fiber Covered Film Insulated
DIELECTRIC STRENGTH		Not less than the following:

AWG Size	Mandrel Diameter
4/0–9	10d
10–30	5d

AWG Size	Minimum Elongation Percent
4–8	30.0
9–15	20.0
16–21	15.0
22–30	10.0

	AWG Size	Diameter of Mandrel Inches	Diameter of Mandrel mm	Minimum Breakdown, Volts*
3.8.2	4/0–9	...	...	150
3.8.4 or 3.8.5	10–23	1.00	25.4	360
3.8.4 or 3.8.5	24–30	0.25	6.3	225

*For polyester glass fiber covered wire having an underlying film insulation, add the minimum breakdown voltage given in Part 2 for the film insulated wire.

Copyright National Electrical Manufacturers Association
Provided by IHS under license with NEMA
No reproduction or networking permitted without license from IHS

Not for Resale

Table D (MW 45-C)
DOUBLE POLYESTER GLASS FIBER COVERED BARE OR FILM INSULATED ROUND COPPER MAGNET WIRE THERMAL CLASS 155

AWG Size	Bare Wire Diameter, Inches†			Minimum Increase in Double Polyester Glass Fiber Covering, Inches†	Maximum Overall Diameter, Inches†			AWG Size
	Minimum	Nominal	Maximum		Bare	Single Film	Heavy Film	
4/0	0.4554	0.4600	0.4646	0.0060	0.4736	...	...	4/0
3/0	0.4055	0.4096	0.4137	0.0060	0.4227	...	...	3/0
2/0	0.3612	0.3648	0.3684	0.0060	0.3774	...	...	2/0
1/0	0.3217	0.3249	0.3281	0.0060	0.3371	...	...	1/0
1	0.2864	0.2893	0.2922	0.0060	0.3012	...	...	1
2	0.2550	0.2576	0.2602	0.0060	0.2692	...	...	2
3	0.2271	0.2294	0.2317	0.0060	0.2407	...	...	3
4	0.2023	0.2043	0.2053*	0.0060	0.2153	...	0.2188	4
5	0.1801	0.1819	0.1828*	0.0060	0.1927	...	0.1962	5
6	0.1604	0.1620	0.1628*	0.0060	0.1726	...	0.1761	6
7	0.1429	0.1443	0.1450*	0.0060	0.1547	...	0.1581	7
8	0.1272	0.1285	0.1292*	0.0060	0.1388	...	0.1422	8
9	0.1133	0.1144	0.1150*	0.0060	0.1245	...	0.1279	9
10	0.1009	0.1019	0.1024*	0.0055	0.1109	...	0.1141	10
11	0.0898	0.0907	0.0912*	0.0055	0.0996	...	0.1028	11
12	0.0800	0.0808	0.0812*	0.0055	0.0896	...	0.0927	12
13	0.0713	0.0720	0.0724*	0.0055	0.0807	...	0.0837	13
14	0.0635	0.0641	0.0644*	0.0055	0.0727	0.0746	0.0762	14
15	0.0565	0.0571	0.0574*	0.0055	0.0657	0.0674	0.0689	15
16	0.0503	0.0508	0.0511*	0.0055	0.0593	0.0611	0.0625	16
17	0.0448	0.0453	0.0455*	0.0055	0.0538	0.0555	0.0568	17
18	0.0399	0.0403	0.0405*	0.0055	0.0487	0.0504	0.0517	18
19	0.0355	0.0359	0.0361*	0.0055	0.0443	0.0459	0.0471	19
20	0.0317	0.0320	0.0322*	0.0055	0.0403	0.0419	0.0431	20
21	0.0282	0.0285	0.0286*	0.0055	0.0368	0.0383	0.0394	21
22	0.0250	0.0253	0.0254*	0.0055	0.0336	0.0350	0.0361	22
23	0.0224	0.0226	0.0227*	0.0055	0.0308	0.0323	0.0333	23
24	0.0199	0.0201	0.0202*	0.0045	0.0268	0.0282	0.0292	24
25	0.0177	0.0179	0.0180*	0.0045	0.0246	0.0259	0.0268	25
26	0.0157	0.0159	0.0160*	0.0045	0.0226	0.0238	0.0247	26
27	0.0141	0.0142	0.0143	0.0045	0.0208	0.0221	0.0229	27
28	0.0125	0.0126	0.0127	0.0045	0.0192	0.0205	0.0212	28
29	0.0112	0.0113	0.0114	0.0045	0.0179	0.0191	0.0198	29
30	0.0099	0.0100	0.0101	0.0045	0.0166	0.0177	0.0184	30

*This maximum bare wire diameter shall be permitted to be exceeded; see 1.6.7.2.
† For metric equivalent, see Table 1-10.

Copyright National Electrical Manufacturers Association
Provided by IHS under license with NEMA
No reproduction or networking permitted without license from IHS

Not for Resale

MW 46-C (Single)
SINGLE POLYESTER GLASS FIBER COVERED HEAVY FILM INSULATED RECTANGULAR AND SQUARE COPPER MAGNET WIRE THERMAL CLASS 155

INSULATING MATERIALS The fiber covering shall shall consist a combination of polyester and glass fibers. The glass fibers shall be electrical grade continuous filament glass yarn. The polyester fiber shall be a high grade yarn resulting from the linear polymerization of ethylene glycol and terephthalic acid. The maximum content by weight of polyester fiber in the yarn shall not exceed 50 percent. The underlying film coating shall have at least a Class 130 rating. The polyester glass fiber covering shall be wrapped firmly, closely, evenly, and continuously around the wire. The polyester glass fiber covering shall be fused; when required it may be treated with an insulating varnish or compound to provide a tough outer finish.

THERMAL CLASS 155°C as defined in Part 3, para. 3.58.2.

GENERAL REQUIREMENTS See Part 1.

Properties	Test Procedure, See Part 3, Paragraph	Requirements
DIMENSIONS	3.2.2.2	Rectangular Wire: a. Radii—see Table 1-13 b. Thickness and width tolerances—see Table 1-14 c. Dimensions and increase in thickness—see Table STW (MW 46-C) Square wire: a. Radii—see Table SSQ (MW 46-C) b. Bare size, increase due to insulation—see Table SSQ (MW 46-C)
ADHERENCE AND FLEXIBILITY	3.3.3	No cracks visible in the film coating after 20 percent elongation. Examine with normal vision and without removal of glass fiber covering
ELONGATION	3.4	Not less than 32 percent for thicknesses of 0.049 inch (1.25 mm) and greater or 30 percent for thicknesses less than 0.049 inch (1.25 mm)
SPRINGBACK	3.7.2	Not greater than 5.5°
DIELECTRIC STRENGTH	3.8.2	Not less than 90 volts/mil (3543 v/mm) of the minimum thickness of the polyester glass fiber covering on one side [one half the minimum calculated from Table STW (MW 46-C) or Table SSQ (MW 46-C)] plus the minimum breakdown given in Part 2 for the film insulated wire

Copyright National Electrical Manufacturers Association
Provided by IHS under license with NEMA
No reproduction or networking permitted without license from IHS

Not for Resale

Table STW (MW 46-C)
SINGLE POLYESTER GLASS FIBER COVERED HEAVY FILM INSULATED, RECTANGULAR COPPER MAGNET WIRE THERMAL CLASS 155

Maximum Increase in Thickness, Inches (mm), Due to
Single Polyester glass fiber Covering, Heavy Film Insulation and Treating Varnish,
Rectangular Wire

Nominal Thickness		Nominal Width																																Nominal Thickness	
		2.00	2.12	2.24	2.37	2.50	2.65	2.80	3.00	3.15	3.35	3.55	3.75	4.00	4.25	4.50	4.75	5.00	5.30	5.60	6.00	6.30	6.70	7.10	7.50	8.00	8.50	9.00	9.50	10.0	10.6	11.2	11.8	12.5	Millimeters
	Inches	0.079	±0.083	0.088	±0.093	0.098	±0.104	0.110	±0.118	0.124	±0.132	0.140	±0.148	0.157	±0.167	0.177	±0.187	0.197	±0.209	0.220	±0.236	0.248	±0.264	0.280	±0.295	0.315	±0.335	0.354	±0.374	0.394	±0.417	0.441	±0.465	0.492	Inches	
0.63	0.025																																		0.025	0.63
0.71	0.028																																		0.028	0.71
0.80	0.031																																		0.031	0.80
0.90	0.035																																		0.035	0.90
1.00	0.039																																		0.039	1.00
1.12	0.044																																		0.044	1.12
1.25	0.049																																		0.049	1.25
1.40	0.055																																		0.055	1.40
1.60	0.063																																		0.063	1.60
1.80	0.071																																		0.071	1.80
2.00	0.079																																		0.079	2.00
2.24	0.088																																		0.088	2.24
2.50	0.098																																		0.098	2.50
2.80	0.110																																		0.110	2.80
3.15	0.124																																		0.124	3.15
3.55	0.140																																		0.140	3.55
4.00	0.157																																		0.157	4.00
4.50	0.177																																		0.177	4.50
5.00	0.197																																		0.197	5.00
5.60	0.220																																		0.220	5.60

0.010" (0.254 mm) | 0.011" (0.279 mm) | 0.012" (0.305 mm) | 0.013" (0.330 mm)

℗ R-40-Series Intermediate Number.

EXAMPLE - Preferred Size..... 0.055 x 0.110 (R-20 x R-20)
Intermediate Size.....0.055 x 0.118 (R-20 x R-40)

NOTE I– The maximum increase due to the film and fiber covering shall be permitted to be exceeded provided the overall dimension of the covered wire does not exceed the sum of the maximum thickness of the bare wire plus the maximum increase due to the heavy film insulation and single polyester glass fiber covering.

NOTE II– The increase in thickness due to the heavy film insulation shall be in accordance with the applicable section for film insulated wire in Part 2.

NOTE III– The increase in thickness due to the single polyester-glass-fiber covering shall be determined by subtracting 0.005 inch (0.127 mm) (maximum thickness of film insulation) from the maximum increase in thickness given in the table.

NOTE IV– The increase in width due to the polyester-glass-fiber covering shall be equal to or less than the maximum increase in thickness given in the table. Note I applies to the increase in width as well as the increase in thickness.

NOTE V– Because it is impossible to accurately separate the polyester-glass-fiber covering from the film insulation, the total minimum increase in the thickness of the film insulated polyester-glass-fiber covered rectangular wire shall be the sum of the minimum increase due to the film insulation (as shown for film insulated wire in Part 2) and the minimum increase due to the polyester-glass-fiber covering. The total minimum increase shall be not less than 70 percent of the maximum increase given in the table above, rounded to the nearest 0.001 inch (0.025 mm).

Copyright National Electrical Manufacturers Association
Provided by IHS under license with NEMA
No reproduction or networking permitted without license from IHS

Not for Resale

SINGLE POLYESTER GLASS FIBER COVERED, HEAVY FILM INSULATED SQUARE COPPER MAGNET WIRE THERMAL CLASS 155

Minimum Increase and Maximum Overall Dimensions Due to Heavy Film Insulation, Single Polyester Glass Fiber Covering and Treating Varnish

Table SSQ (MW 46-C) Inches

Square AWG Size	Bare Wire Dimensions			Nominal	Heavy Film Insulated Single Polyester Glass Covered	
	Minimum	Nominal	Maximum	Radii ± 25%	Minimum Increase	Maximum Overall
0	0.3219	0.3249	0.3279	0.040	0.009	0.341
1	0.2864	0.2893	0.2922	0.040	0.009	0.305
2	0.2550	0.2576	0.2602	0.040	0.008	0.272
3	0.2271	0.2294	0.2317	0.040	0.008	0.244
4	0.2023	0.2043	0.2063	0.040	0.008	0.219
5	0.1801	0.1819	0.1837	0.040	0.008	0.196
6	0.1604	0.1620	0.1636	0.032	0.008	0.175
7	0.1429	0.1443	0.1457	0.032	0.008	0.157
8	0.1272	0.1285	0.1298	0.032	0.008	0.141
9	0.1133	0.1144	0.1155	0.026	0.008	0.127
10	0.1009	0.1019	0.1029	0.026	0.007	0.113
11	0.0897	0.0907	0.0917	0.020	0.007	0.102
12	0.0798	0.0808	0.0818	0.020	0.007	0.092
13	0.0710	0.0720	0.0730	0.016	0.007	0.084
14	0.0631	0.0641	0.0651	0.016	0.007	0.076

Table SSQ (MW 46-C) mm

Square AWG Size	Bare Wire Dimensions			Nominal	Heavy Film Insulated Single Polyester Glass Covered	
	Minimum	Nominal	Maximum	Radii ± 25%	Minimum Increase	Maximum Overall
0	8.176	8.252	8.329	1.02	0.229	8.661
1	7.275	7.348	7.422	1.02	0.229	7.747
2	6.477	6.543	6.609	1.02	0.203	6.909
3	5.768	5.827	5.885	1.02	0.203	6.198
4	5.138	5.189	5.240	1.02	0.203	5.563
5	4.575	4.620	4.666	1.02	0.203	4.978
6	4.074	4.115	4.155	0.81	0.203	4.445
7	3.630	3.665	3.701	0.81	0.203	3.988
8	3.231	3.264	3.297	0.81	0.203	3.581
9	2.878	2.906	2.934	0.66	0.203	3.226
10	2.563	2.588	2.614	0.66	0.178	2.870
11	2.278	2.304	2.329	0.51	0.178	2.591
12	2.027	2.052	2.078	0.51	0.178	2.337
13	1.803	1.829	1.854	0.41	0.178	2.134
14	1.603	1.628	1.654	0.41	0.178	1.930

Copyright National Electrical Manufacturers Association
Provided by IHS under license with NEMA
No reproduction or networking permitted without license from IHS

Not for Resale

Copyright National Electrical Manufacturers Association
Provided by IHS under license with NEMA
No reproduction or networking permitted without license from IHS

Not for Resale

MW 46-C (Double)
DOUBLE POLYESTER GLASS FIBER COVERED, BARE OR HEAVY FILM INSULATED RECTANGULAR AND SQUARE COPPER MAGNET WIRE THERMAL CLASS 155

INSULATING MATERIALS The fiber covering shall shall consist a combination of polyester and glass fibers. The glass fibers shall be electrical grade continuous filament glass yarn. The polyester fiber covering shall be a high grade yarn resulting from the linear polymerization of ethylene glycol and terephthalic acid. The maximum content by weight of polyester fiber in the yarn shall not exceed 50 percent. If an underlying film insulation used, it shall have at least a Class 130 rating. The polyester glass fiber covering shall be wrapped firmly, closely, evenly, and continuously around the wire. Adjacent layers shall be wound in opposite directions. The polyester glass fiber covering shall be fused; when required it may be treated with an insulating varnish or compound to provide a tough outer finish.

THERMAL CLASS 155°C as defined in Part 3, para. 3.58.2.

GENERAL REQUIREMENTS See Part 1.

Properties	Test Procedure, See Part 3, Paragraph	Requirements
DIMENSIONS	3.2.2.2	Rectangular Wire: a. Radii—see Table 1-13 b. Thickness and width tolerances—see Table 1-14 c. Dimensions and increase in thickness—see Table DTW-1 and DTW-2 (MW 46-C) Square wire: a. Radii—see Table DSQ (MW 46-C) b. Bare size, increase due to insulation—see Table DSQ (MW 46-C)
ADHERENCE AND FLEXIBILITY	3.3.5	Without underlying film: Not less than 75 volts/mil (2950 v/mm) of minimum thickness of the polyester glass fiber covering on one side [one-half the minimum calculated from Tables DTW-1, DTW-2 or DSQ (MW 46-C)] over bare wire.
	3.3.3	With underlying film: No cracks visible in the film insulation after 20 percent elongation. Examine with normal vision and without removal of polyester glass fiber covering
ELONGATION	3.4	Not less than 32 percent for thicknesses of 0.049 inch (1.25 mm) and greater or 30 percent for thicknesses less than 0.049 inch (1.25 mm)
SPRINGBACK	3.7.2	Not greater than 5° for Polyester Glass Fiber Covered Bare Not greater than 5.5° for Polyester Glass Fiber Covered Heavy Film Insulated
DIELECTRIC STRENGTH	3.8.3	Not less than 90 volts/mil (3543 v/mm) of the minimum thickness of the polyester glass fiber covering on one side [one half the minimum calculated from Tables DTW-1, DTW-2, or DSQ (MW 46-C) plus the minimum breakdown given in Part 2 for the film insulation when present

Copyright National Electrical Manufacturers Association
Provided by IHS under license with NEMA
No reproduction or networking permitted without license from IHS

Not for Resale

TABLE DTW-1 (MW 46-C)
DOUBLE POLYESTER GLASS FIBER COVERED, BARE RECTANGULAR COPPER MAGNET WIRE THERMAL CLASS 155

Maximum Increase in Thickness, Inches (mm), Due to Double Polyester Glass Fiber Covering and Treating Varnish, Rectangular Wire

Nominal Thickness		Nominal Width																													Nominal Thickness	
		2.00	2.12	2.24	2.37	2.50	2.65	2.80	3.00	3.15	3.35	3.55	3.75	4.00	4.25	4.50	4.75	5.00	5.30	5.60	6.00	6.30	6.70	7.10	7.50	8.00	8.50	9.00	9.50	10.0	10.6	11.2	11.8	12.5	Millimeters	
	Inches	0.079	†0.083	0.088	†0.093	0.098	†0.104	0.110	†0.118	0.124	†0.132	0.140	†0.148	0.157	†0.167	0.177	†0.187	0.197	†0.209	0.220	†0.236	0.248	†0.264	0.280	†0.295	0.315	†0.335	0.354	†0.374	0.394	†0.417	0.441	†0.465	0.492	Inches	
0.63	0.025	0.011" (0.279 mm)								0.012" (0.305 mm)				0.013" (0.330 mm)				0.014" (0.356 mm)						0.015" (0.381 mm)											0.016" (0.406 mm)		0.025	0.63
0.71	0.028																																		0.028	0.71
0.80	0.031																																		0.031	0.80
0.90	0.035																																		0.035	0.90
1.00	0.039																																		0.039	1.00
1.12	0.044																																		0.044	1.12
1.25	0.049																																		0.049	1.25
1.40	0.055																																		0.055	1.40
1.60	0.063																																		0.063	1.60
1.80	0.071																																		0.071	1.80
2.00	0.079																																		0.079	2.00
2.24	0.088																																		0.088	2.24
2.50	0.098																																		0.098	2.50
2.80	0.110									0.013"																									0.110	2.80
3.15	0.124																			0.015"															0.124	3.15
3.55	0.140																																		0.140	3.55
4.00	0.157																																		0.157	4.00
4.50	0.177																	0.015"																	0.177	4.50
5.00	0.197																																		0.197	5.00
5.60	0.220																																		0.220	5.60

R-40 Series Intermediate Number.

EXAMPLE - Preferred Size.....0.055 x 0.110 (R-20 x R-20)
Intermediate Size.....0.055 x 0.118 (R-20 x R-40)

NOTE I– The maximum increase due to the glass fiber covering shall be permitted to be exceeded provided the overall dimension of the covered wire does not exceed the sum of the maximum thickness of the bare wire plus the maximum increase due to the polyester glass fiber covering.

NOTE II– The increase in thickness due to the polyester glass fiber covering shall be not less than 70 percent of the maximum shown in the table above, rounded to the nearest 0.001 inch (0.025 mm).

NOTE III–The increase in width due to the polyester glass fiber covering shall be equal to or less than the maximum increase in thickness given in the table. Note I applies to the increase in width as well as the increase in thickness.

Copyright National Electrical Manufacturers Association
Provided by IHS under license with NEMA
No reproduction or networking permitted without license from IHS

Not for Resale

TABLE DTW-2 (MW 46-C)
DOUBLE POLYESTER GLASS FIBER, HEAVY FILM INSULATED RECTANGULAR COPPER MAGNET WIRE THERMAL CLASS 155

Maximum Increase in Thickness, Inches (mm), Due to Heavy Film Insulation, Double Polyester glass fiber Covering, and Treating Varnish, Rectangular Wire

Nominal Thickness		Nominal Width																													Nominal Thickness	
		2.00	2.12	2.24	2.37	2.50	2.65	2.80	3.00	3.15	3.35	3.55	3.75	4.00	4.25	4.50	4.75	5.00	5.30	5.60	6.00	6.30	6.70	7.10	7.50	8.00	8.50	9.00	9.50	10.0	10.6	11.2	11.8	12.5	Millimeters	
	Inches	0.079	†0.083	0.088	†0.093	0.098	†0.104	0.110	†0.118	0.124	†0.132	0.140	†0.148	0.157	†0.167	0.177	†0.187	0.197	†0.209	0.220	†0.236	0.248	†0.264	0.280	†0.295	0.315	†0.335	0.354	†0.374	0.394	†0.417	0.441	†0.465	0.492	Inches	
0.63	0.025																																		0.025	0.63
0.71	0.028																																		0.028	0.71
0.80	0.031																																		0.031	0.80
0.90	0.035																																		0.035	0.90
1.00	0.039																																		0.039	1.00
1.12	0.044																																		0.044	1.12
1.25	0.049																																		0.049	1.25
1.40	0.055																																		0.055	1.40
1.60	0.063																																		0.063	1.60
1.80	0.071																																		0.071	1.80
2.00	0.079																																		0.079	2.00
2.24	0.088																																		0.088	2.24
2.50	0.098																																		0.098	2.50
2.80	0.110																																		0.110	2.80
3.15	0.124																																		0.124	3.15
3.55	0.140																																		0.140	3.55
4.00	0.157																																		0.157	4.00
4.50	0.177																																		0.177	4.50
5.00	0.197																																		0.197	5.00
5.60	0.220																																		0.220	5.60

R-40 Series Intermediate Number.

EXAMPLE - Preferred Size.....0.055 x 0.110 (R-20 x R-20)
Intermediate Size.....0.055 x 0.118 (R-20 x R-40)

NOTE I– The maximum increase due to the polyester glass fiber covering shall be permitted to be exceeded provided the overall dimension of the covered wire does not exceed the sum of the maximum thickness of the bare wire plus the maximum increase given in Table DTW-2 (MW 46-C).

NOTE II– The increase in thickness due to the heavy film insulation shall be in accordance with the applicable section for film insulated wire in Part 2.

NOTE III–The minimum increase due to the polyester glass fiber covering shall be not less than 70 percent of the maximum shown in the Table DTW-1 (MW 46-C), rounded to the nearest 0.001 inch (0.025 mm).

NOTE IV–The increase in width due to the polyester glass fiber covering shall be equal to or less than the maximum increase in thickness given in Table DTW-1 (MW 46-C). Note I applies to the increase in width as well as the increase in thickness.

NOTE V– Because it is impossible to accurately separate the polyester glass fiber covering from the film insulation, the total minimum increase in the thickness of a film insulated and fiber covered rectangular wire shall be the sum of the minimum increase due to the film insulation (as shown for film insulated wire in Part 2) and the minimum increase due to the polyester glass fiber covering. The total minimum increase shall be not less than 70 percent of the maximum increase given in Table DTW-1 (MW 46-C) plus the minimum for the film insulated wire, rounded to the nearest 0.001 inch (0.025 mm).

Copyright National Electrical Manufacturers Association
Provided by IHS under license with NEMA
No reproduction or networking permitted without license from IHS

Not for Resale

DOUBLE POLYESTER GLASS FIBER COVERED, BARE OR HEAVY FILM INSULATED SQUARE COPPER MAGNET WIRE THERMAL CLASS 155

Minimum Increase and Maximum Overall Dimensions Due to Polyester Glass Fiber Covering and Treating Varnish

Table DSQ (MW 46-C) Inches

AWG Size	Bare Wire Dimensions			Nominal	Bare Double Polyester Glass Covered		Heavy Film Insulated Double Polyester Glass Covered	
	Minimum	Nominal	Maximum	Radii ± 25%	Minimum Increase	Maximum Overall	Minimum Increase*	Maximum Overall
0	0.3219	0.3249	0.3279	0.040	0.012	0.344	0.015	0.349
1	0.2864	0.2893	0.2922	0.040	0.012	0.308	0.015	0.313
2	0.2550	0.2576	0.2602	0.040	0.012	0.276	0.015	0.281
3	0.2271	0.2294	0.2317	0.040	0.012	0.248	0.015	0.253
4	0.2023	0.2043	0.2063	0.040	0.012	0.222	0.015	0.227
5	0.1801	0.1819	0.1837	0.040	0.011	0.199	0.014	0.204
6	0.1604	0.1620	0.1636	0.032	0.011	0.179	0.014	0.184
7	0.1429	0.1443	0.1457	0.032	0.010	0.160	0.013	0.165
8	0.1272	0.1285	0.1298	0.032	0.009	0.143	0.012	0.148
9	0.1133	0.1144	0.1155	0.026	0.009	0.129	0.012	0.134
10	0.1009	0.1019	0.1029	0.026	0.008	0.115	0.011	0.120
11	0.0897	0.0907	0.0917	0.020	0.008	0.103	0.011	0.108
12	0.0798	0.0808	0.0818	0.020	0.008	0.093	0.011	0.098
13	0.0710	0.0720	0.0730	0.016	0.008	0.084	0.011	0.089
14	0.0631	0.0641	0.0651	0.016	0.008	0.076	0.011	0.081

* Minimum increase including film insulation

Table DSQ (MW 46-C) mm

Square AWG Size	Bare Wire Dimensions			Nominal	Bare Double Polyester Glass Covered		Heavy Film Insulated Double Polyester Glass Covered	
	Minimum	Nominal	Maximum	Radii ± 25%	Minimum Increase	Maximum Overall	Minimum Increase*	Maximum Overall
0	8.176	8.252	8.329	1.02	0.305	8.738	0.381	8.865
1	7.275	7.348	7.422	1.02	0.305	7.823	0.381	7.950
2	6.477	6.543	6.609	1.02	0.305	7.010	0.381	7.137
3	5.768	5.827	5.885	1.02	0.305	6.299	0.381	6.426
4	5.138	5.189	5.240	1.02	0.305	5.639	0.381	5.766
5	4.575	4.620	4.666	1.02	0.279	5.055	0.356	5.182
6	4.074	4.115	4.155	0.81	0.279	4.547	0.356	4.674
7	3.630	3.665	3.701	0.81	0.254	4.064	0.330	4.191
8	3.231	3.264	3.297	0.81	0.229	3.632	0.305	3.759
9	2.878	2.906	2.934	0.66	0.229	3.277	0.305	3.404
10	2.563	2.588	2.614	0.66	0.203	2.921	0.279	3.048
11	2.278	2.304	2.329	0.51	0.203	2.616	0.279	2.743
12	2.027	2.052	2.078	0.51	0.203	2.362	0.279	2.489
13	1.803	1.829	1.854	0.41	0.203	2.134	0.279	2.261
14	1.603	1.628	1.654	0.41	0.203	1.930	0.279	2.057

* Minimum increase including film insulation

Copyright National Electrical Manufacturers Association
Provided by IHS under license with NEMA
No reproduction or networking permitted without license from IHS

Not for Resale

MW 47-C (Single)
SINGLE POLYESTER GLASS FIBER COVERED SILICONE TREATED, BARE OR FILM INSULATED ROUND COPPER MAGNET WIRE THERMAL CLASS 200

INSULATING MATERIALS The fiber covering shall consist of a combination of polyester and glass fibers. The glass fibers shall be electrical grade continuous filament glass yarn. The polyester fiber shall be a high grade yarn resulting from the linear polymerization of ethylene glycol and terephthalic acid. The maximum content by weight of polyester fiber in the yarn shall not exceed 50 percent. If an underlying film insulation is used, it shall have at least a Class 180 rating. The polyester glass fiber covering shall be wrapped firmly, closely, evenly, and continuously around the wire. The polyester glass fiber covering shall be fused and shall be treated with a modified silicone insulating varnish or silicone compound to provide a tough outer finish. If a tracer is used, one or more ends of glass yarn in the outer layer should be black or green, and the dye or pigment used for this purpose shall be sufficiently stable so as to retain its color identity after the silicone treatment and subsequent baking.

THERMAL CLASS 200°C as defined in Part 3, para. 3.58.2.

GENERAL REQUIREMENTS See Part 1.

<table>
<tr><th>Properties</th><th>Test Procedure, See Part 3, Paragraph</th><th>Requirements</th></tr>
<tr><td>DIMENSIONS</td><td>3.2.1.3</td><td>See Table S (MW 47-C)</td></tr>
<tr><td>ADHERENCE AND FLEXIBILITY</td><td>3.3.2</td><td>Covering shall not open sufficiently to expose the bare or underlying film insulated wire after bending the wire on mandrel sizes as follows:
<table>
<tr><th>AWG Size</th><th>Mandrel Diameter</th></tr>
<tr><td>4–9</td><td>10d</td></tr>
<tr><td>10–30</td><td>5d</td></tr>
</table></td></tr>
<tr><td></td><td>3.3.3</td><td>After a specimen has been elongated 25% or to its breaking point, whichever is less, there shall be no loosening, fraying or loss of adherence of the covering except at the point of rupture.</td></tr>
<tr><td>ELONGATION</td><td>3.4</td><td>Not less than the following:
<table>
<tr><th>AWG Size</th><th>Minimum Elongation Percent</th></tr>
<tr><td>4–8</td><td>30.0</td></tr>
<tr><td>9–15</td><td>20.0</td></tr>
<tr><td>16–21</td><td>15.0</td></tr>
<tr><td>22–30</td><td>10.0</td></tr>
</table></td></tr>
<tr><td>SPRINGBACK</td><td>3.7.2</td><td>Not greater than 5° for Glass Fiber Covered Bare
Not greater than 5.5° for Glass Fiber Covered Film Insulated</td></tr>
<tr><td>DIELECTRIC STRENGTH</td><td></td><td>Not less than the following:
<table>
<tr><th rowspan="2">AWG Size</th><th colspan="2">Diameter of Mandrel</th><th rowspan="2">Minimum Breakdown, Volts*</th></tr>
<tr><th>Inches</th><th>mm</th></tr>
<tr><td>4–9</td><td>...</td><td>...</td><td>150</td></tr>
<tr><td>10–23</td><td>1.00</td><td>25.4</td><td>360</td></tr>
<tr><td>24–30</td><td>0.25</td><td>6.3</td><td>225</td></tr>
</table>
*For polyester glass fiber covered wire having an underlying film insulation, add the minimum breakdown voltage given in Part 2 for the film insulated wire.</td></tr>
<tr><td></td><td>3.8.2</td><td></td><td></td></tr>
<tr><td></td><td>3.8.4 or 3.8.5</td><td></td><td></td></tr>
<tr><td></td><td>3.8.4 or 3.8.5</td><td></td><td></td></tr>
</table>

Copyright National Electrical Manufacturers Association
Provided by IHS under license with NEMA
No reproduction or networking permitted without license from IHS

Not for Resale

Table S (MW 47-C)
SINGLE POLYESTER GLASS FIBER COVERED SILICONE TREATED, BARE OR FILM INSULATED ROUND COPPER MAGNET WIRE THERMAL CLASS 200

AWG Size	Bare Wire Diameter, Inches†			Minimum Increase in Single Polyester Glass Fiber Covering, Inches†	Maximum Overall Diameter, Inches†			AWG Size
	Minimum	Nominal	Maximum		Bare	Single Film	Heavy Film	
4	0.2023	0.2043	0.2053*	0.0040	...	...	0.2158	4
5	0.1801	0.1819	0.1828*	0.0040	...	...	0.1932	5
6	0.1604	0.1620	0.1628*	0.0040	...	...	0.1731	6
7	0.1429	0.1443	0.1450*	0.0040	...	...	0.1551	7
8	0.1272	0.1285	0.1292*	0.0040	...	...	0.1392	8
9	0.1133	0.1144	0.1150*	0.0040	...	...	0.1249	9
10	0.1009	0.1019	0.1024*	0.0035	0.1079	...	0.1111	10
11	0.0898	0.0907	0.0912*	0.0035	0.0966	...	0.0998	11
12	0.0800	0.0808	0.0812*	0.0035	0.0866	...	0.0897	12
13	0.0713	0.0720	0.0724*	0.0035	0.0777	...	0.0807	13
14	0.0635	0.0641	0.0644*	0.0035	0.0697	0.0716	0.0732	14
15	0.0565	0.0571	0.0574*	0.0035	0.0627	0.0644	0.0659	15
16	0.0503	0.0508	0.0511*	0.0035	0.0563	0.0581	0.0595	16
17	0.0448	0.0453	0.0455*	0.0035	0.0508	0.0525	0.0538	17
18	0.0399	0.0403	0.0405*	0.0035	0.0457	0.0487	0.0487	18
19	0.0355	0.0359	0.0361*	0.0035	0.0413	0.0429	0.0441	19
20	0.0317	0.0320	0.0322*	0.0035	0.0373	0.0389	0.0401	20
21	0.0282	0.0285	0.0286*	0.0035	0.0338	0.0353	0.0364	21
22	0.0250	0.0253	0.0254*	0.0035	0.0306	0.0320	0.0331	22
23	0.0224	0.0226	0.0227*	0.0035	0.0278	0.0293	0.0303	23
24	0.0199	0.0201	0.0202*	0.0025	0.0253	0.0267	0.0277	24
25	0.0177	0.0179	0.0180*	0.0025	0.0231	0.0244	0.0253	25
26	0.0157	0.0159	0.0160*	0.0025	0.0211	0.0223	0.0232	26
27	0.0141	0.0142	0.0143	0.0025	0.0193	0.0206	0.0214	27
28	0.0125	0.0126	0.0127	0.0025	0.0177	0.0190	0.0197	28
29	0.0112	0.0113	0.0114	0.0025	0.0164	0.0176	0.0183	29
30	0.0099	0.0100	0.0101	0.0025	0.0151	0.0162	0.0169	30

*This maximum bare wire diameter shall be permitted to be exceeded; see 1.6.7.2.
† For metric equivalent, see Table 1-9.

Copyright National Electrical Manufacturers Association
Provided by IHS under license with NEMA
No reproduction or networking permitted without license from IHS

Not for Resale

MW 47-C (Double)
DOUBLE POLYESTER GLASS FIBER COVERED SILICONE TREATED, BARE OR FILM INSULATED ROUND COPPER MAGNET WIRE THERMAL CLASS 200

INSULATING MATERIALS The fiber covering shall consist of a combination of polyester and glass fibers. The glass fibers shall be electrical grade continuous filament glass yarn. The polyester fiber shall be a high grade yarn resulting from the linear polymerization of ethylene glycol and terephthalic acid. The maximum content by weight of polyester fiber in the yarn shall not exceed 50 percent. If an underlying film insulation is used, it shall have at least a Class 180 rating. The polyester glass fiber covering shall be wrapped firmly, closely, evenly, and continuously around the wire. The polyester glass fiber covering shall be fused and shall be treated with a modified silicone insulating varnish or silicone compound to provide a tougher outer finish. If a tracer is used, one or more ends of glass yarn in the outer layer should be black or green, and the dye or pigment used for this purpose shall be sufficiently stable so as to retain its color identity after the silicone treatment and subsequent baking. When specified, either layer may consist of 100 percent glass fibers.

THERMAL CLASS 200°C as defined in Part 3, para. 3.58.2.

GENERAL REQUIREMENTS See Part 1.

Properties	Test Procedure, See Part 3, Paragraph	Requirements
DIMENSIONS	3.2.1.3	See Table D (MW 47-C)
ADHERENCE AND FLEXIBILITY	3.3.2	Covering shall not open sufficiently to expose the bare or underlying film insulated wire after bending the wire on mandrel sizes as follows:

AWG Size	Mandrel Diameter
4–9	10d
10–30	5d

	3.3.2	After a specimen has been elongated 25% or to its breaking point, whichever is less, there shall be no loosening, fraying or loss of adherence of the covering except at the point of rupture.
ELONGATION	3.4	Not less than the following:

AWG Size	Minimum Elongation Percent
4–8	30.0
9–15	20.0
16–21	15.0
22–30	10.0

SPRINGBACK	3.7.2	Not greater than 5° for Glass Fiber Covered Bare Not greater than 5.5° for Glass Fiber Covered Film Insulated
DIELECTRIC STRENGTH		Not less than the following:

	Diameter of Mandrel		Minimum
AWG Size	Inches	mm	Breakdown, Volts*
3.8.2 4–9	...	...	150
3.8.4 or 3.8.5 10–23	1.00	25.4	360
3.8.4 or 3.8.5 24–30	0.25	6.3	225

*For polyester glass fiber covered wire having an underlying film insulation, add the minimum breakdown voltage given in Part 2 for the film insulated wire.

Copyright National Electrical Manufacturers Association
Provided by IHS under license with NEMA
No reproduction or networking permitted without license from IHS

Not for Resale

Table D (MW 47-C)
DOUBLE POLYESTER GLASS FIBER COVERED SILICONE TREATED, BARE OR FILM INSULATED ROUND COPPER MAGNET WIRE THERMAL CLASS 200

AWG Size	Bare Wire Diameter, Inches†			Minimum Increase in Double Polyester Glass Fiber Covering, Inches†	Maximum Overall Diameter, Inches†			AWG Size
	Minimum	Nominal	Maximum		Bare	Single Film	Heavy Film	
4	0.2023	0.2043	0.2053*	0.0060	0.2153	...	0.2188	4
5	0.1801	0.1819	0.1828*	0.0060	0.1927	...	0.1962	5
6	0.1604	0.1620	0.1628*	0.0060	0.1726	...	0.1761	6
7	0.1429	0.1443	0.1450*	0.0060	0.1547	...	0.1581	7
8	0.1272	0.1285	0.1292*	0.0060	0.1388	...	0.1422	8
9	0.1133	0.1144	0.1150*	0.0060	0.1245	...	0.1279	9
10	0.1009	0.1019	0.1024*	0.0055	0.1109	...	0.1141	10
11	0.0898	0.0907	0.0912*	0.0055	0.0996	...	0.1028	11
12	0.0800	0.0808	0.0812*	0.0055	0.0896	...	0.0927	12
13	0.0713	0.0720	0.0724*	0.0055	0.0807	...	0.0837	13
14	0.0635	0.0641	0.0644*	0.0055	0.0727	0.0746	0.0792	14
15	0.0565	0.0571	0.0574*	0.0055	0.0657	0.0674	0.0689	15
16	0.0503	0.0508	0.0511*	0.0055	0.0593	0.0611	0.0625	16
17	0.0448	0.0453	0.0455*	0.0055	0.0538	0.0555	0.0568	17
18	0.0399	0.0403	0.0405*	0.0055	0.0487	0.0504	0.0517	18
19	0.0355	0.0359	0.0361*	0.0055	0.0443	0.0459	0.0471	19
20	0.0317	0.0320	0.0322*	0.0055	0.0403	0.0419	0.0431	20
21	0.0282	0.0285	0.0286*	0.0055	0.0368	0.0383	0.0394	21
22	0.0250	0.0253	0.0254*	0.0055	0.0336	0.0350	0.0361	22
23	0.0224	0.0226	0.0227*	0.0055	0.0308	0.0323	0.0333	23
24	0.0199	0.0201	0.0202*	0.0045	0.0268	0.0282	0.0292	24
25	0.0177	0.0179	0.0180*	0.0045	0.0246	0.0259	0.0268	25
26	0.0157	0.0159	0.0160*	0.0045	0.0226	0.0238	0.0247	26
27	0.0141	0.0142	0.0143	0.0045	0.0208	0.0221	0.0229	27
28	0.0125	0.0126	0.0127	0.0045	0.0192	0.0205	0.0212	28
29	0.0112	0.0113	0.0114	0.0045	0.0179	0.0191	0.0198	29
30	0.0099	0.0100	0.0101	0.0045	0.0166	0.0177	0.0184	30

*This maximum bare wire diameter shall be permitted to be exceeded; see 1.6.7.2.
† For metric equivalent, see Table 1-10.

Copyright National Electrical Manufacturers Association
Provided by IHS under license with NEMA
No reproduction or networking permitted without license from IHS

Not for Resale

MW 48-C (Single)
SINGLE POLYESTER GLASS FIBER COVERED SILICONE TREATED HEAVY FILM INSULATED RECTANGULAR AND SQUARE COPPER MAGNET WIRE THERMAL CLASS 200

INSULATING MATERIALS The fiber covering shall shall consist a combination of polyester and glass fibers. The glass fibers shall be electrical grade continuous filament glass yarn. The polyester fiber shall be a high grade yarn resulting from the linear polymerization of ethylene glycol and terephthalic acid. The maximum content by weight of polyester fiber in the yarn shall not exceed 50 percent. The underlying film insulation shall have at least a Class 180 rating. The polyester glass fiber covering shall be wrapped firmly, closely, evenly, and continuously around the wire. The polyester glass fiber covering shall be fused and treated with a modified silicone insulating varnish. If a tracer is used, one or more ends of glass yarn in the outer layer should be black or green, and the dye or pigment used for this purpose shall be sufficiently stable so as to retain its color identity after the silicone treatment and subsequent baking.

THERMAL CLASS 200°C as defined in Part 3, para. 3.58.

GENERAL REQUIREMENTS See Part 1.

Properties	Test Procedure, See Part 3, Paragraph	Requirements
DIMENSIONS	3.2.2.2	Rectangular Wire: a. Radii—see Table 1-13 b. Thickness and width tolerances—see Table 1-14 c. Dimensions and increase in thickness—see Table STW (MW 48-C) Square wire: a. Radii—see Table SSQ (MW 48-C) b. Bare size, increase due to insulation—see Table SSQ (MW 48-C)
ADHERENCE AND FLEXIBILITY	3.3.3	No cracks visible in the film insulation after 20 percent elongation. Examine with normal vision and without removal of glass fiber covering
ELONGATION	3.4	Not less than 32 percent for thicknesses of 0.049 inch (1.25 mm) and greater or 30 percent for thicknesses less than 0.049 inch (1.25 mm)
SPRINGBACK	3.7.2	Not greater than 5.5°
DIELECTRIC STRENGTH	3.8.2	Not less than 90 volts/mil (3543 v/mm) of the minimum thickness of the polyester glass fiber covering on one side [one half the minimum calculated from Table STW (MW 48-C) or Table SSQ (MW 48-C)] plus the minimum breakdown given in Part 2 for the film insulated wire

Copyright National Electrical Manufacturers Association
Provided by IHS under license with NEMA
No reproduction or networking permitted without license from IHS

Not for Resale

Table STW (MW 48-C)
SINGLE POLYESTER GLASS FIBER COVERED SILICONE TREATED HEAVY FILM INSULATED RECTANGULAR COPPER MAGNET WIRE
THERMAL CLASS 200

Maximum Increase in Thickness, Inches (mm), Due to Single Polyester Glass Fiber Covering, Heavy Film Insulation and Silicone Varnish, Rectangular Wire

Nominal Thickness		Nominal Width																																								Nominal Thickness	
		2.00	2.12	2.24	2.37	2.50	2.65	2.80	3.00	3.15	3.35	3.55	3.75	4.00	4.25	4.50	4.75	5.00	5.30	5.60	6.00	6.30	6.70	7.10	7.50	8.00	8.50	9.00	9.50	10.0	10.6	11.2	11.8	12.5								Millimeters	
	Inches	0.079	†0.083	0.088	†0.093	0.098	†0.104	0.110	†0.118	0.124	†0.132	0.140	†0.148	0.157	†0.167	0.177	†0.187	0.197	†0.209	0.220	†0.236	0.248	†0.264	0.280	†0.295	0.315	†0.335	0.354	†0.374	0.394	†0.417	0.441	†0.465	0.492								Inches	
0.63	0.025																																								0.025	0.63
0.71	0.028																																								0.028	0.71
0.80	0.031																																								0.031	0.80
0.90	0.035	0.010" (0.254 mm)								0.011" (0.279 mm)								0.012" (0.305 mm)							0.013" (0.330 mm)															0.035	0.90
1.00	0.039																																								0.039	1.00
1.12	0.044																																								0.044	1.12
1.25	0.049																																								0.049	1.25
1.40	0.055																																								0.055	1.40
1.60	0.063																																								0.063	1.60
1.80	0.071																																								0.071	1.80
2.00	0.079																																								0.079	2.00
2.24	0.088																																								0.088	2.24
2.50	0.098																																								0.098	2.50
2.80	0.110																																								0.110	2.80
3.15	0.124																																								0.124	3.15
3.55	0.140																																								0.140	3.55
4.00	0.157																																								0.157	4.00
4.50	0.177																																								0.177	4.50
5.00	0.197																																								0.197	5.00
5.60	0.220																																								0.220	5.60

R-40 Series Intermediate Number.

EXAMPLE - Preferred Size.....0.055 x 0.110 (R-20 x R-20)
Intermediate Size.....0.055 x 0.118 (R-20 x R-40)

NOTE I– The maximum increase due to the glass fiber covering shall be permitted to be exceeded provided the overall dimension of the covered wire does not exceed the sum of the maximum thickness of the bare wire plus the maximum increase due to the polyester glass fiber covering.

NOTE II– The increase in thickness due to the heavy film insulation shall be in accordance with the applicable section for film-insulated wire in Part 2.

NOTE III–The increase in thickness due to the single polyester-glass-fiber covering shall be determined by subtracting 0.005 inch (0.127 mm) (maximum thickness of film coating) from the maximum increase in thickness given in the table.

NOTE IV–The increase in width due to the polyester-glass-fiber covering shall be equal to or less than the maximum increase in thickness given in the table. Note I applies to the increase in width as well as the increase in thickness.

NOTE V– Because it is impossible to accurately separate the polyester-glass-fiber covering from the film insulation, the total minimum increase in the thickness of the film-insulated polyester-glass-fiber covered rectangular wire shall be the sum of the minimum increase due to the film insulation (as shown for film-coated wire in Part 2) and the minimum increase due to the polyester-glass-fiber covering. The total minimum increase shall be not less than 70 percent of the maximum increase given in the table above, rounded to the nearest 0.001 inch (0.025 mm).

Copyright National Electrical Manufacturers Association
Provided by IHS under license with NEMA
No reproduction or networking permitted without license from IHS

Not for Resale

SINGLE POLYESTER GLASS FIBER COVERED SILICONE TREATED, HEAVY FILM INSULATED SQUARE COPPER MAGNET WIRE THERMAL CLASS 200

Minimum Increase and Maximum Overall Dimensions Due to Heavy Film Insulation,
Single Polyester Glass Fiber Covering and Treating Varnish

Table SSQ (MW 48-C) Inches

Square AWG Size	Bare Wire Dimensions			Nominal	Heavy Film Insulated Single Polyester Glass Covered	
	Minimum	Nominal	Maximum	Radii ± 25%	Minimum Increase	Maximum Overall
0	0.3219	0.3249	0.3279	0.040	0.009	0.341
1	0.2864	0.2893	0.2922	0.040	0.009	0.305
2	0.2550	0.2576	0.2602	0.040	0.008	0.272
3	0.2271	0.2294	0.2317	0.040	0.008	0.244
4	0.2023	0.2043	0.2063	0.040	0.008	0.219
5	0.1801	0.1819	0.1837	0.040	0.008	0.196
6	0.1604	0.1620	0.1636	0.032	0.008	0.175
7	0.1429	0.1443	0.1457	0.032	0.008	0.157
8	0.1272	0.1285	0.1298	0.032	0.008	0.141
9	0.1133	0.1144	0.1155	0.026	0.008	0.127
10	0.1009	0.1019	0.1029	0.026	0.007	0.113
11	0.0897	0.0907	0.0917	0.020	0.007	0.102
12	0.0798	0.0808	0.0818	0.020	0.007	0.092
13	0.0710	0.0720	0.0730	0.016	0.007	0.084
14	0.0631	0.0641	0.0651	0.016	0.007	0.076

Table SSQ (MW 48-C) mm

Square AWG Size	Bare Wire Dimensions			Nominal	Heavy Film Insulated Single Polyester Glass Covered	
	Minimum	Nominal	Maximum	Radii ± 25%	Minimum Increase	Maximum Overall
0	8.176	8.252	8.329	1.02	0.229	8.661
1	7.275	7.348	7.422	1.02	0.229	7.747
2	6.477	6.543	6.609	1.02	0.203	6.909
3	5.768	5.827	5.885	1.02	0.203	6.198
4	5.138	5.189	5.240	1.02	0.203	5.563
5	4.575	4.620	4.666	1.02	0.203	4.978
6	4.074	4.115	4.155	0.81	0.203	4.445
7	3.630	3.665	3.701	0.81	0.203	3.988
8	3.231	3.264	3.297	0.81	0.203	3.581
9	2.878	2.906	2.934	0.66	0.203	3.226
10	2.563	2.588	2.614	0.66	0.178	2.870
11	2.278	2.304	2.329	0.51	0.178	2.591
12	2.027	2.052	2.078	0.51	0.178	2.337
13	1.803	1.829	1.854	0.41	0.178	2.134
14	1.603	1.628	1.654	0.41	0.178	1.930

Copyright National Electrical Manufacturers Association
Provided by IHS under license with NEMA
No reproduction or networking permitted without license from IHS

Not for Resale

Copyright National Electrical Manufacturers Association
Provided by IHS under license with NEMA
No reproduction or networking permitted without license from IHS

Not for Resale

MW 48-C (Double)
DOUBLE POLYESTER GLASS FIBER COVERED SILICONE TREATED BARE OR HEAVY FILM INSULATED RECTANGULAR AND SQUARE COPPER MAGNET WIRE THERMAL CLASS 200

INSULATING MATERIALS The fiber covering shall shall consist a combination of polyester and glass fibers. The glass fibers shall be electrical grade continuous filament glass yarn. The polyester fiber covering shall be a high grade yarn resulting from the linear polymerization of ethylene glycol and terephthalic acid. The maximum content by weight of polyester fiber in the yarn shall not exceed 50 percent. If an underlying film insulation used, it shall have at least a Class 180 rating. The polyester glass fiber covering shall be wrapped firmly, closely, evenly, and continuously around the wire. Adjacent layers shall be wound in opposite directions. The polyester glass fiber covering shall be fused and treated with a modified silicone insulating varnish or silicone compound to provide a tough outer finish. If a tracer is used, one or more ends of glass yarn in the outer layer should be black or green, and the dye or pigment used for this purpose shall be sufficiently stable so as to retain its color identity after the silicone treatment and subsequent baking. When specified, either layer may consist of 100 percent glass fiber.

THERMAL CLASS 200°C as defined in Part 3, para. 3.58.2.

GENERAL REQUIREMENTS See Part 1.

Properties	Test Procedure, See Part 3, Paragraph	Requirements
DIMENSIONS	3.2.2.2	Rectangular Wire: a. Radii—see Table 1-13 b. Thickness and width tolerances—see Table 1-14 c. Dimensions and increase in thickness—see Table DTW-1 and DTW-2 (MW 48-C) Square Wire: a. Radii—see Table DSQ (MW 48-C) b. Bare size, increase due to insulation—see Table DSQ (MW 48-C)
ADHERENCE AND FLEXIBILITY	3.3.5	Without underlying film: Not less than 75 volts/mil (2950 v/mm) of minimum thickness of the polyester glass fiber covering on one side [one-half the minimum calculated from Tables DTW-1, DTW-2 or DSQ (MW 48-C)] over bare wire.
	3.3.3	With underlying film: No cracks visible in the film coating after 20 percent elongation. Examine with normal vision and without removal of polyester glass fiber covering
ELONGATION	3.4	Not less than 32 percent for thicknesses of 0.049 inch (1.25 mm) and greater or 30 percent for thicknesses less than 0.049 inch (1.25 mm)
SPRINGBACK	3.7.2	Not greater than 5° for Polyester Glass Fiber Covered Not greater than 5.5° for Polyester Glass Fiber Covered Heavy Film Insulated Wire
DIELECTRIC STRENGTH	3.8.2	Not less than 90 volts/mil (3543 v/mm) of the minimum thickness of the polyester glass fiber covering on one side [one half the minimum calculated from Tables DTW-1, DTW-2, or DSQ (MW 48-C) plus the minimum breakdown given in Part 2 for the film insulation when present

Copyright National Electrical Manufacturers Association
Provided by IHS under license with NEMA
No reproduction or networking permitted without license from IHS

Not for Resale

TABLE DTW-1 (MW 48-C)
DOUBLE POLYESTER GLASS FIBER COVERED SILICONE TREATED BARE RECTANGULAR COPPER MAGNET WIRE
THERMAL CLASS 200

Maximum Increase in Thickness, Inches (mm), Due to Double Polyester Glass Fiber Covering and Silicone Varnish, Rectangular Wire

Nominal Thickness		Nominal Width																													Nominal Thickness	
		2.00	2.12	2.24	2.37	2.50	2.65	2.80	3.00	3.15	3.35	3.55	3.75	4.00	4.25	4.50	4.75	5.00	5.30	5.60	6.00	6.30	6.70	7.10	7.50	8.00	8.50	9.00	9.50	10.0	10.6	11.2	11.8	12.5	Millimeters	
	Inches	0.079	†0.083	0.088	†0.093	0.098	†0.104	0.110	†0.118	0.124	†0.132	0.140	†0.148	0.157	†0.167	0.177	†0.187	0.197	†0.209	0.220	†0.236	0.248	†0.264	0.280	†0.295	0.315	†0.335	0.354	†0.374	0.394	†0.417	0.441	†0.465	0.492	Inches	
0.63	0.025																																		0.025	0.63
0.71	0.028																																		0.028	0.71
0.80	0.031																																		0.031	0.80
0.90	0.035																																		0.035	0.90
1.00	0.039	0.011" (0.279 mm)								0.012" (0.305 mm)				0.013" (0.330 mm)				0.014" (0.356 mm)				0.015" (0.381 mm)				0.016" (0.406 mm)								0.039	1.00
1.12	0.044																																		0.044	1.12
1.25	0.049																																		0.049	1.25
1.40	0.055																																		0.055	1.40
1.60	0.063																																		0.063	1.60
1.80	0.071																																		0.071	1.80
2.00	0.079																																		0.079	2.00
2.24	0.088																																		0.088	2.24
2.50	0.098																																		0.098	2.50
2.80	0.110									0.013"											0.015"														0.110	2.80
3.15	0.124																																		0.124	3.15
3.55	0.140																																		0.140	3.55
4.00	0.157																																		0.157	4.00
4.50	0.177																	0.015"																	0.177	4.50
5.00	0.197																																		0.197	5.00
5.60	0.220																																		0.220	5.60

R-40 Series Intermediate Number.

EXAMPLE - Preferred Size.....0.055 x 0.110 (R-20 x R-20)
Intermediate Size.....0.055 x 0.118 (R-20 x R-40)

NOTE I– The maximum increase due to the glass fiber covering shall be permitted to be exceeded provided the overall dimension of the covered wire does not exceed the sum of the maximum thickness of the bare wire plus the maximum increase given in Table DTW-2 (MW 48-C).

NOTE II– The increase in thickness due to the heavy film insulation shall be in accordance with the applicable section for film insulated wire in Part 2.

NOTE III–The increase in thickness due to the polyester glass fiber covering shall be not less than 70 percent of the maximum shown in Table DTW-1 (MW 48-C), rounded to the nearest 0.001 inch (0.025 mm).

NOTE IV–The increase in width due to the polyester glass fiber covering shall be equal to or less than the maximum increase in thickness given in Table DTW-1 (MW 48-C). Note I applies to the increase in width as well as the increase in thickness.

NOTE V– Because it is impossible to accurately separate the polyester glass fiber covering from the film insulation, the total minimum increase in the thickness of a film insulated and fiber covered rectangular wire shall be the sum of the minimum increase due to the film insulation (as shown for film insulated wire in Part 2) and the minimum increase due to the polyester fiber covering. The total minimum increase shall be not less than 70 percent of the maximum increase given in Table DTW-1 (MW 48-C) plus the minimum for the film insulated wire, rounded to the nearest 0.001 inch (0.025 mm).

Copyright National Electrical Manufacturers Association
Provided by IHS under license with NEMA
No reproduction or networking permitted without license from IHS

Not for Resale

TABLE DTW-2 (MW 48-C)
DOUBLE POLYESTER GLASS FIBER COVERED SILICONE TREATED HEAVY FILM INSULATED RECTANGULAR COPPER MAGNET WIRE
THERMAL CLASS 200

Maximum Increase in Thickness, Inches (mm), Due to Heavy Film Insulation, Double Polyester Glass Fiber Covering, and Silicone Varnish, Regular Wire

Nominal Thickness		Nominal Width																													Nominal Thickness	
		2.00	2.12	2.24	2.37	2.50	2.65	2.80	3.00	3.15	3.35	3.55	3.75	4.00	4.25	4.50	4.75	5.00	5.30	5.60	6.00	6.30	6.70	7.10	7.50	8.00	8.50	9.00	9.50	10.0	10.6	11.2	11.8	12.5	Millimeters	
	Inches	0.079	†0.083	0.088	†0.093	0.098	†0.104	0.110	†0.118	0.124	†0.132	0.140	†0.148	0.157	†0.167	0.177	†0.187	0.197	†0.209	0.220	†0.236	0.248	†0.264	0.280	†0.295	0.315	†0.335	0.354	†0.374	0.394	†0.417	0.441	†0.465	0.492	Inches	
0.63	0.025	0.016" (0.406 mm)								0.017" (0.432 mm)				0.018" (0.457 mm)				0.019" (0.483 mm)				0.020" (0.508 mm)				0.021" (0.533 mm)									0.025	0.63
0.71	0.028																																		0.028	0.71
0.80	0.031																																		0.031	0.80
0.90	0.035																																		0.035	0.90
1.00	0.039																																		0.039	1.00
1.12	0.044																																		0.044	1.12
1.25	0.049																																		0.049	1.25
1.40	0.055																																		0.055	1.40
1.60	0.063																																		0.063	1.60
1.80	0.071																																		0.071	1.80
2.00	0.079																																		0.079	2.00
2.24	0.088																																		0.088	2.24
2.50	0.098																																		0.098	2.50
2.80	0.110									0.018"																									0.110	2.80
3.15	0.124																				0.020"														0.124	3.15
3.55	0.140																																		0.140	3.55
4.00	0.157																																		0.157	4.00
4.50	0.177																	0.020"																	0.177	4.50
5.00	0.197																																		0.197	5.00
5.60	0.220																																		0.220	5.60

R-40 Series Intermediate Number.

EXAMPLE - Preferred Size.....0.055 x 0.110 (R-20 x R-20)
Intermediate Size.....0.055 x 0.118 (R-20 x R-40)

NOTE I– The maximum increase due to the polyester glass fiber covering shall be permitted to be exceeded provided the overall dimension of the covered wire does not exceed the sum of the maximum thickness of the bare wire plus the maximum increase given in Table DTW-2 (MW 48-C).

NOTE II– The maximum increase due to the heavy film insulation shall be in accordance with the applicable section for film insulated wire in Part 2.

NOTE III– The minimum increase due to the polyester glass fiber covering shall be not less than 70 percent of the maximum shown in the Table DTW-1 (MW 48-C), rounded to the nearest 0.001 inch (0.025 mm).

NOTE IV– The increase in width due to the polyester glass fiber covering shall be equal to or less than the maximum increase in thickness given in Table DTW-1 (MW 48-C). Note I applies to the increase in width as well as the increase in thickness.

NOTE V– Because it is impossible to accurately separate the polyester glass fiber covering from the film insulation, the total minimum increase in the thickness of a film insulated and fiber covered rectangular wire shall be the sum of the minimum increase due to the film insulation (as shown for film insulated wire in Part 2) and the minimum increase due to the polyester fiber covering. The total minimum increase shall be not less than 70 percent of the maximum increase given in Table DTW-1 (MW 48-C) plus the minimum for the film insulated wire, rounded to the nearest 0.001 inch (0.025 mm).

Copyright National Electrical Manufacturers Association
Provided by IHS under license with NEMA
No reproduction or networking permitted without license from IHS

Not for Resale

DOUBLE POLYESTER GLASS FIBER COVERED SILICONE TREATED, BARE OR HEAVY FILM INSULATED SQUARE COPPER MAGNET WIRE THERMAL CLASS 200

Minimum Increase and Maximum Overall Dimensions Due to Polyester Glass Fiber Covering and Silicone Varnish

Table DSQ (MW 48-C) Inches

Square AWG Size	Bare Wire Dimensions			Nominal	Bare Double Polyester Glass Covered		Heavy Film Insulated Double Polyester Glass-Covered	
	Minimum	Nominal	Maximum	Radii ± 25%	Minimum Increase	Maximum Overall	Minimum Increase*	Maximum Overall
0	0.3219	0.3249	0.3279	0.040	0.012	0.344	0.015	0.349
1	0.2864	0.2893	0.2922	0.040	0.012	0.308	0.015	0.313
2	0.2550	0.2576	0.2602	0.040	0.012	0.276	0.015	0.281
3	0.2271	0.2294	0.2317	0.040	0.012	0.248	0.015	0.253
4	0.2023	0.2043	0.2063	0.040	0.012	0.222	0.015	0.227
5	0.1801	0.1819	0.1837	0.040	0.011	0.199	0.014	0.204
6	0.1604	0.1620	0.1636	0.032	0.011	0.179	0.014	0.184
7	0.1429	0.1443	0.1457	0.032	0.010	0.160	0.013	0.165
8	0.1272	0.1285	0.1298	0.032	0.009	0.143	0.012	0.148
9	0.1133	0.1144	0.1155	0.026	0.009	0.129	0.012	0.134
10	0.1009	0.1019	0.1029	0.026	0.008	0.115	0.011	0.120
11	0.0897	0.0907	0.0917	0.020	0.008	0.103	0.011	0.108
12	0.0798	0.0808	0.0818	0.020	0.008	0.093	0.011	0.098
13	0.0710	0.0720	0.0730	0.016	0.008	0.084	0.011	0.089
14	0.0631	0.0641	0.0651	0.016	0.008	0.076	0.011	0.081

* Minimum increase including film insulation.

Table DSQ (MW 48-C) mm

Square AWG Size	Bare Wire Dimensions			Nominal	Bare Double Polyester Glass Covered		Heavy Film Insulated Double Polyester Glass Covered	
	Minimum	Nominal	Maximum	Radii ± 25%	Minimum Increase	Maximum Overall	Minimum Increase*	Maximum Overall
0	8.176	8.252	8.329	1.02	0.305	8.738	0.381	8.865
1	7.275	7.348	7.422	1.02	0.305	7.823	0.381	7.950
2	6.477	6.543	6.609	1.02	0.305	7.010	0.381	7.137
3	5.768	5.827	5.885	1.02	0.305	6.299	0.381	6.426
4	5.138	5.189	5.240	1.02	0.305	5.639	0.381	5.766
5	4.575	4.620	4.666	1.02	0.279	5.055	0.356	5.182
6	4.074	4.115	4.155	0.81	0.279	4.547	0.356	4.674
7	3.630	3.665	3.701	0.81	0.254	4.064	0.330	4.191
8	3.231	3.264	3.297	0.81	0.229	3.632	0.305	3.759
9	2.878	2.906	2.934	0.66	0.229	3.277	0.305	3.404
10	2.563	2.588	2.614	0.66	0.203	2.921	0.279	3.048
11	2.278	2.304	2.329	0.51	0.203	2.616	0.279	2.743
12	2.027	2.052	2.078	0.51	0.203	2.362	0.279	2.489
13	1.803	1.829	1.854	0.41	0.203	2.134	0.279	2.261
14	1.603	1.628	1.654	0.41	0.203	1.930	0.279	2.057

* Minimum increase including film insulation.

Copyright National Electrical Manufacturers Association
Provided by IHS under license with NEMA
No reproduction or networking permitted without license from IHS

Not for Resale

MW 50-C (Single)
SINGLE GLASS FIBER COVERED HIGH TEMPERATURE ORGANIC VARNISH TREATED, BARE OR FILM INSULATED ROUND COPPER MAGNET WIRE THERMAL CLASS 180

INSULATING MATERIALS The glass fiber shall be electrical grade continuous filament glass yarn. If an underlying film insulation is used, it shall have at least a Class 155 rating. The glass fiber covering shall be wrapped firmly, closely, evenly, and continuously around the wire. The glass fiber covering shall be treated with a high temperature non-silicone organic insulating varnish.

THERMAL CLASS 180°C as defined in Part 3, para. 3.58.

GENERAL REQUIREMENTS See Part 1.

DIMENSIONS — Test Procedure, See Part 3, Paragraph: 3.2.1.3 — Requirements: See Table S (MW 50-C)

ADHERENCE AND FLEXIBILITY — Test Procedure, See Part 3, Paragraph: 3.3.2 — Requirements: Covering shall not open sufficiently to expose the bare or film insulated wire after bending on mandrel sizes as follows:

AWG Size	Mandrel Diameter
0 and larger	15d
1 to 30	10d

ELONGATION — Test Procedure, See Part 3, Paragraph: 3.4 — Requirements: Not less than the following:

AWG Size	Minimum Elongation, Percent: With Glass Fiber Covering	Minimum Elongation, Percent: Glass Fiber Covering Removed
4/0–0	35.0	35.0
1–8	30.0	30.0
9–15	20.0	30.0
16–21	15.0	25.0
22–28	...	20.0
29 and 30	...	15.0

SPRINGBACK — Test Procedure, See Part 3, Paragraph: 3.7.2 — Requirements: 4/0-13 AWG—Not greater than 5° for Glass Fiber Covered Bare 4-13 AWG—Not greater than 5.5° for Glass Fiber Covered Film Insulated

DIELECTRIC STRENGTH — Requirements: Not less than the following:

AWG Size	Diameter of Mandrel: Inches	Diameter of Mandrel: mm	Minimum Breakdown, Volts*	Test Procedure, See Part 3, Paragraph
9 and larger	...	...	170	3.8.2
10–23	1.00	25.4	360	3.8.4 or
24–30	0.25	6.3	225	3.8.5

*For glass fiber covered wire having an underlying film insulation, add the minimum breakdown voltage given in Part 2 for the film insulated wire.

Copyright National Electrical Manufacturers Association
Provided by IHS under license with NEMA
No reproduction or networking permitted without license from IHS
Not for Resale

Table S (MW 50-C)
SINGLE GLASS FIBER COVERED HIGH TEMPERATURE ORGANIC VARNISH TREATED, BARE OR FILM INSULATED ROUND COPPER MAGNET WIRE THERMAL CLASS 180

AWG Size	Bare Wire Diameter, Inches†			Minimum Increase, Glass Fiber Covering, Inches†	Maximum Overall Diameter, Inches†			AWG Size
	Minimum	Nominal	Maximum		Bare	Single Film	Heavy Film	
4/0	0.4554	0.4600	0.4646	0.0045	0.4716	...	...	4/0
3/0	0.4055	0.4096	0.4137	0.0045	0.4207	...	...	3/0
2/0	0.3612	0.3648	0.3684	0.0045	0.3754	...	...	2/0
1/0	0.3217	0.3249	0.3281	0.0045	0.3351	...	...	1/0
1	0.2864	0.2893	0.2922	0.0045	0.2992	...	...	1
2	0.2550	0.2576	0.2602	0.0045	0.2672	...	...	2
3	0.2271	0.2294	0.2317	0.0045	0.2367	...	...	3
4	0.2023	0.2043	0.2053*	0.0045	0.2133	...	0.2168	4
5	0.1801	0.1819	0.1828*	0.0045	0.1907	...	0.1942	5
6	0.1604	0.1620	0.1628*	0.0045	0.1706	...	0.1741	6
7	0.1429	0.1443	0.1450*	0.0045	0.1527	...	0.1561	7
8	0.1272	0.1285	0.1292*	0.0045	0.1368	...	0.1402	8
9	0.1133	0.1144	0.1150*	0.0045	0.1225	...	0.1259	9
10	0.1009	0.1019	0.1024*	0.0040	0.1089	...	0.1121	10
11	0.0898	0.0907	0.0912*	0.0040	0.0976	...	0.1008	11
12	0.0800	0.0808	0.0812*	0.0040	0.0876	...	0.0907	12
13	0.0713	0.0720	0.0724*	0.0040	0.0787	...	0.0817	13
14	0.0635	0.0641	0.0644*	0.0040	0.0707	0.0726	0.0742	14
15	0.0565	0.0571	0.0574*	0.0040	0.0637	0.0654	0.0669	15
16	0.0503	0.0508	0.0511*	0.0040	0.0573	0.0591	0.0605	16
17	0.0448	0.0453	0.0455*	0.0040	0.0518	0.0535	0.0548	17
18	0.0399	0.0403	0.0405*	0.0040	0.0467	0.0484	0.0497	18
19	0.0355	0.0359	0.0361*	0.0040	0.0423	0.0439	0.0451	19
20	0.0317	0.0320	0.0322*	0.0040	0.0383	0.0399	0.0411	20
21	0.0282	0.0285	0.0286*	0.0040	0.0348	0.0363	0.0374	21
22	0.0250	0.0253	0.0254*	0.0040	0.0316	0.0330	0.0341	22
23	0.0224	0.0226	0.0227*	0.0040	0.0288	0.0303	0.0313	23
24	0.0199	0.0201	0.0202*	0.0025	0.0243	0.0257	0.0257	24
25	0.0177	0.0179	0.0180*	0.0025	0.0221	0.0234	0.0243	25
26	0.0157	0.0159	0.0160*	0.0025	0.0201	0.0213	0.0222	26
27	0.0141	0.0142	0.0143	0.0025	0.0183	0.0196	0.0204	27
28	0.0125	0.0126	0.0127	0.0025	0.0167	0.0180	0.0187	28
29	0.0112	0.0113	0.0114	0.0025	0.0154	0.0166	0.0173	29
30	0.0099	0.0100	0.0101	0.0025	0.0141	0.0152	0.0159	30

*This maximum bare wire diameter shall be permitted to be exceeded; see 1.6.7.2
† For metric equivalent, see Table 1-7

Copyright National Electrical Manufacturers Association
Provided by IHS under license with NEMA
No reproduction or networking permitted without license from IHS

Not for Resale

MW 50-C (Double)
DOUBLE GLASS FIBER COVERED HIGH TEMPERATURE ORGANIC VARNISH TREATED, BARE OR FILM INSULATED ROUND COPPER MAGNET WIRE THERMAL CLASS 180

INSULATING MATERIALS The glass fiber shall be electrical grade continuous filament glass yarn. If an underlying film insulation is used, it shall have at least a Class 155 rating. The glass fiber covering shall be wrapped firmly, closely, evenly, and continuously around the wire. Adjacent layers shall be wound in opposite directions. The glass fiber covering shall be treated with a high temperature non-silicone organic insulating varnish.

THERMAL CLASS 180°C as defined in Part 3, para. 3.58.

GENERAL REQUIREMENTS See Part 1.

Properties	Test Procedure, See Part 3, Paragraph	Requirements
DIMENSIONS	3.2.1.3	See Table D (MW 50-C)
ADHERENCE AND FLEXIBILITY	3.3.2	Covering shall not open sufficiently to expose the bare or film insulated wire after bending on mandrel sizes as follows:

AWG Size	Mandrel Diameter
0 and larger	15d
1 to 30	10d

ELONGATION 3.4 Not less than the following:

AWG Size	Minimum Elongation, Percent: With Glass Fiber Covering	Minimum Elongation, Percent: Glass Fiber Covering Removed
4/0–0	35.0	35.0
1–8	30.0	30.0
9–15	20.0	30.0
16–21	15.0	25.0
22–28	...	20.0
29 and above	...	15.0

SPRINGBACK 3.7.2 4/0-13 AWG—not greater than 5° for Glass Fiber Covered Bare. 4-13 AWG—not greater than 5.5° for Glass Fiber Covered Film Insulated

DIELECTRIC STRENGTH Not less than the following:

Mandrel AWG Size	Diameter of: Inches	Diameter of: mm	Minimum Breakdown, Volts*	Test Procedure, See Part 3, Paragraph
4/0–9	...	...	315	3.8.2
10–23	1.00	25.4	540	3.8.4 or
24–30	0.25	6.3	400	3.8.5

*For glass fiber covered wire having an underlying film coating, add the minimum breakdown voltage given in Part 2 for the film insulated wire.

Copyright National Electrical Manufacturers Association
Provided by IHS under license with NEMA
No reproduction or networking permitted without license from IHS

Not for Resale

Table D (MW 50-C)
DOUBLE GLASS FIBER COVERED HIGH TEMPERATURE ORGANIC VARNISH TREATED, BARE OR FILM INSULATED ROUND COPPER MAGNET WIRE THERMAL CLASS 180

AWG Size	Bare Wire Diameter, Inches†			Minimum Increase, Glass Fiber Covering, Inches†	Maximum Overall Diameter, Inches†			AWG Size
	Minimum	Nominal	Maximum		Bare	Single Film	Heavy Film	
4/0	0.4554	0.4600	0.4646	0.0070	0.4756	...	...	4/0
3/0	0.4055	0.4096	0.4137	0.0070	0.4247	...	...	3/0
2/0	0.3612	0.3648	0.3684	0.0070	0.3794	...	...	2/0
1/0	0.3217	0.3249	0.3281	0.0070	0.3391	...	...	1/0
1	0.2864	0.2893	0.2922	0.0070	0.3032	...	...	1
2	0.2550	0.2576	0.2602	0.0070	0.2712	...	...	2
3	0.2271	0.2294	0.2317	0.0070	0.2427	...	...	3
4	0.2023	0.2043	0.2053*	0.0070	0.2173	...	0.2210	4
5	0.1801	0.1819	0.1828*	0.0070	0.1947	...	0.1982	5
6	0.1604	0.1620	0.1628*	0.0070	0.1746	...	0.1781	6
7	0.1429	0.1443	0.1450*	0.0070	0.1567	...	0.1601	7
8	0.1272	0.1285	0.1292*	0.0070	0.1408	...	0.1442	8
9	0.1133	0.1144	0.1150*	0.0070	0.1265	...	0.1299	9
10	0.1009	0.1019	0.1024*	0.0060	0.1119	...	0.1151	10
11	0.0898	0.0907	0.0912*	0.0060	0.1006	...	0.1038	11
12	0.0800	0.0808	0.0812*	0.0060	0.0906	...	0.0937	12
13	0.0713	0.0720	0.0724*	0.0060	0.0817	...	0.0847	13
14	0.0635	0.0641	0.0644*	0.0060	0.0737	0.0756	0.0772	14
15	0.0565	0.0571	0.0574*	0.0060	0.0667	0.0684	0.0699	15
16	0.0503	0.0508	0.0511*	0.0060	0.0603	0.0621	0.0635	16
17	0.0448	0.0453	0.0455*	0.0060	0.0548	0.0565	0.0578	17
18	0.0399	0.0403	0.0405*	0.0060	0.0497	0.0514	0.0527	18
19	0.0355	0.0359	0.0361*	0.0060	0.0453	0.0469	0.0481	19
20	0.0317	0.0320	0.0322*	0.0060	0.0413	0.0429	0.0441	20
21	0.0282	0.0285	0.0286*	0.0060	0.0378	0.0393	0.0404	21
22	0.0250	0.0253	0.0254*	0.0060	0.0346	0.0360	0.0371	22
23	0.0224	0.0226	0.0227*	0.0060	0.0318	0.0333	0.0343	23
24	0.0199	0.0201	0.0202*	0.0045	0.0263	0.0277	0.0287	24
25	0.0177	0.0179	0.0180*	0.0045	0.0241	0.0254	0.0263	25
26	0.0157	0.0159	0.0160*	0.0045	0.0221	0.0233	0.0242	26
27	0.0141	0.0142	0.0143	0.0045	0.0203	0.0216	0.0224	27
28	0.0125	0.0126	0.0127	0.0045	0.0187	0.0200	0.0207	28
29	0.0112	0.0113	0.0114	0.0045	0.0174	0.0186	0.0193	29
30	0.0099	0.0100	0.0101	0.0045	0.0161	0.0172	0.0179	30

*This maximum bare wire diameter shall be permitted to be exceeded; see 1.6.7.2
† For metric equivalent, see Table 1-8

Copyright National Electrical Manufacturers Association
Provided by IHS under license with NEMA
No reproduction or networking permitted without license from IHS

Not for Resale

MW 51-C (Single)
SINGLE POLYESTER GLASS FIBER COVERED HIGH TEMPERATURE ORGANIC VARNISH TREATED, BARE OR FILM INSULATED ROUND COPPER MAGNET WIRE
THERMAL CLASS 180

INSULATING MATERIALS The fiber covering shall consist of a combination of polyester and glass fibers. The glass fibers shall be electrical grade continuous filament glass yarn. The polyester fiber shall be a high grade yarn resulting from the linear polymerization of ethylene glycol and terephthalic acid. The maximum content by weight of polyester fiber in the yarn shall not exceed 50 percent. If an underlying film insulation is used, it shall have at least a Class 155 rating. The polyester glass fiber covering shall be wrapped firmly, closely, evenly, and continuously around the wire. The polyester glass fiber covering shall be fused and shall be treated with a high temperature non-silicone organic insulating varnish.

THERMAL CLASS 180°C as defined in Part 3, para. 3.58.

GENERAL REQUIREMENTS See Part 1.

Properties	Test Procedure, See Part 3, Paragraph	Requirements
DIMENSIONS	3.2.1.3	See Table S (MW 51-C)
ADHERENCE AND FLEXIBILITY	3.3.2	Covering shall not open sufficiently to expose the bare or underlying film insulated wire after bending wire on mandrel sizes as follows:

AWG Size	Mandrel Diameter
4–9	10d
10–30	5d

		Not less than the following:

AWG Size	Minimum Elongation Percent
4–8	30.0
9–15	20.0
16–21	15.0
22–30	10.0

SPRINGBACK	3.7.2	4/0-13 AWG—not greater than 5° for Glass Fiber Covered Bare 4-13 AWG—not greater than 5.5° for Glass Fiber Covered Film Insulated
DIELECTRIC STRENGTH	3.8.5	Not less than the following:

AWG Size	Diameter of Mandrel, Inches	Diameter of Mandrel, mm	Minimum Breakdown, Volts*
4–9	...	...	150
10–23	1.00	25.4	360
24–30	0.25	6.3	225

3.8.2
3.8.4 or
3.8.5

*For polyester glass fiber covered wire having an underlying film insulation, add the minimum breakdown voltage given in Part 2 for the film insulated wire

Copyright National Electrical Manufacturers Association
Provided by IHS under license with NEMA
No reproduction or networking permitted without license from IHS

Not for Resale

Table S (MW 51-C)
SINGLE POLYESTER GLASS FIBER COVERED HIGH TEMPERATURE ORGANIC VARNISH TREATED, BARE OR FILM INSULATED ROUND COPPER MAGNET WIRE THERMAL CLASS 180

AWG Size	Bare Wire Diameter, Inches†			Minimum Increase, Glass Fiber Coating, Inches†	Maximum Overall Diameter, Inches†			AWG Size
	Minimum	Nominal	Maximum		Bare	Single Film	Heavy Film	
4	0.2023	0.2043	0.2053*	0.0040	...	...	0.2158	4
5	0.1801	0.1819	0.1828*	0.0040	...	...	0.1932	5
6	0.1604	0.1620	0.1628*	0.0040	...	...	0.1731	6
7	0.1429	0.1443	0.1450*	0.0040	...	...	0.1551	7
8	0.1272	0.1285	0.1292*	0.0040	...	...	0.1392	8
9	0.1133	0.1144	0.1150*	0.0040	...	...	0.1249	9
10	0.1009	0.1019	0.1024*	0.0035	0.1079	...	0.1111	10
11	0.0898	0.0907	0.0912*	0.0035	0.0966	...	0.0998	11
12	0.0800	0.0808	0.0812*	0.0035	0.0866	...	0.0897	12
13	0.0713	0.0720	0.0724*	0.0035	0.0777	...	0.0807	13
14	0.0635	0.0641	0.0644*	0.0035	0.0697	0.0716	0.0732	14
15	0.0565	0.0571	0.0574*	0.0035	0.0627	0.0644	0.0659	15
16	0.0503	0.0508	0.0511*	0.0035	0.0563	0.0581	0.0595	16
17	0.0448	0.0453	0.0455*	0.0035	0.0508	0.0525	0.0538	17
18	0.0399	0.0403	0.0405*	0.0035	0.0457	0.0474	0.0487	18
19	0.0355	0.0359	0.0361*	0.0035	0.0413	0.0429	0.0441	19
20	0.0317	0.0320	0.0322*	0.0035	0.0373	0.0389	0.0401	20
21	0.0282	0.0285	0.0286*	0.0035	0.0338	0.0353	0.0364	21
22	0.0250	0.0253	0.0254*	0.0035	0.0306	0.0320	0.0331	22
23	0.0224	0.0226	0.0227*	0.0035	0.0278	0.0293	0.0303	23
24	0.0199	0.0201	0.0202*	0.0025	0.0253	0.0267	0.0277	24
25	0.0177	0.0179	0.0180*	0.0025	0.0231	0.0244	0.0253	25
26	0.0157	0.0159	0.0160*	0.0025	0.0211	0.0223	0.0232	26
27	0.0141	0.0142	0.0143	0.0025	0.0193	0.0206	0.0214	27
28	0.0125	0.0126	0.0127	0.0025	0.0177	0.0190	0.0197	28
29	0.0112	0.0113	0.0114	0.0025	0.0164	0.0176	0.0183	29
30	0.0099	0.0100	0.0101	0.0025	0.0151	0.0162	0.0169	30

*This maximum bare wire diameter shall be permitted to be exceeded; see 1.6.7.2
† For metric equivalent, see Table 1-9

Copyright National Electrical Manufacturers Association
Provided by IHS under license with NEMA
No reproduction or networking permitted without license from IHS

Not for Resale

MW 51-C (Double)
DOUBLE POLYESTER GLASS FIBER COVERED HIGH TEMPERATURE ORGANIC VARNISH TREATED, BARE OR FILM INSULATED ROUND COPPER MAGNET WIRE
THERMAL CLASS 180

INSULATING MATERIALS The fiber covering shall consist of a combination of polyester and glass fibers. The glass fibers shall be electrical grade continuous filament glass yarn. The polyester fiber shall be a high grade yarn resulting from the linear polymerization of ethylene glycol and terephthalic acid. The maximum content by weight of polyester fiber in the yarn shall not exceed 50 percent. If an underlying film insulation is used, it shall have at least a Class 155 rating. The polyester glass fiber covering shall be wrapped firmly, closely, evenly, and continuously around the wire. Adjacent layers shall be wound in opposite directions. The polyester glass fiber covering shall be fused and shall be treated with a high temperature non-silicone organic insulating varnish. When specified, either layer may consist of 100 percent glass fiber.

THERMAL CLASS 180°C as defined in Part 3, para. 3.58.

GENERAL REQUIREMENTS See Part 1.

Properties	Test Procedure, See Part 3, Paragraph	Requirements
DIMENSIONS	3.2.1.3	See Table D (MW 51-C)
ADHERENCE AND FLEXIBILITY	3.3.2	Covering shall not open sufficiently to expose the bare or underlying film insulated wire after bending wire on mandrel sizes as follows:

AWG Size	Mandrel Diameter
4–9	10d
10–30	5d

		There shall be no loosening, fraying or loss of adherence of the covering except at the point of rupture
ELONGATION	3.4	Not less than the following:

AWG Size	Minimum Elongation Percent
4–8	30.0
9–15	20.0
16–21	15.0
22–30	10.0

SPRINGBACK	3.7.2	4/0-13 AWG—not greater than 5° for Glass Fiber Covered Bare 4-13 AWG—not greater than 5.5° for Glass Fiber Covered Film Insulated
DIELECTRIC STRENGTH		Not less than the following:

	Diameter of Mandrel		Minimum
AWG Size	Inches	mm	Breakdown, Volts*
4–9	...	...	270
10–23	1.00	25.4	540
24–30	0.25	6.3	400

3.8.2
3.8.4 or
3.8.5

*For polyester glass fiber covered wire having an underlying film insulation, add the minimum breakdown voltage given in Part 2 for the film insulated wire.

Copyright National Electrical Manufacturers Association
Provided by IHS under license with NEMA
No reproduction or networking permitted without license from IHS

Not for Resale

Table D (MW 51-C)
DOUBLE POLYESTER GLASS FIBER COVERED HIGH TEMPERATURE ORGANIC VARNISH TREATED, BARE OR FILM INSULATED ROUND COPPER MAGNET WIRE
THERMAL CLASS 180

AWG Size	Bare Wire Diameter, Inches†			Minimum Increase, Polyester Glass Fiber Covering, Inches†	Maximum Overall Diameter, Inches†			AWG Size
	Minimum	Nominal	Maximum		Bare	Single Film	Heavy Film	
4	0.2023	0.2043	0.2053*	0.0060	0.2153	...	0.2188	4
5	0.1801	0.1819	0.1828*	0.0060	0.1927	...	0.1962	5
6	0.1604	0.1620	0.1628*	0.0060	0.1726	...	0.1761	6
7	0.1429	0.1443	0.1450*	0.0060	0.1547	...	0.1581	7
8	0.1272	0.1285	0.1292*	0.0060	0.1388	...	0.1422	8
9	0.1133	0.1144	0.1150*	0.0060	0.1245	...	0.1279	9
10	0.1009	0.1019	0.1024*	0.0055	0.1109	...	0.1141	10
11	0.0898	0.0907	0.0912*	0.0055	0.0996	...	0.1028	11
12	0.0800	0.0808	0.0812*	0.0055	0.0896	...	0.0927	12
13	0.0713	0.0720	0.0724*	0.0055	0.0807	...	0.0837	13
14	0.0635	0.0641	0.0644*	0.0055	0.0727	0.0746	0.0762	14
15	0.0565	0.0571	0.0574*	0.0055	0.0657	0.0674	0.0689	15
16	0.0503	0.0508	0.0511*	0.0055	0.0593	0.0611	0.0625	16
17	0.0448	0.0453	0.0455*	0.0055	0.0538	0.0555	0.0568	17
18	0.0399	0.0403	0.0405*	0.0055	0.0487	0.0504	0.0517	18
19	0.0355	0.0359	0.0361*	0.0055	0.0443	0.0459	0.0471	19
20	0.0317	0.0320	0.0322*	0.0055	0.0403	0.0419	0.0431	20
21	0.0282	0.0285	0.0286*	0.0055	0.0368	0.0383	0.0394	21
22	0.0250	0.0253	0.0254*	0.0055	0.0336	0.0350	0.0361	22
23	0.0224	0.0226	0.0227*	0.0055	0.0308	0.0323	0.0333	23
24	0.0199	0.0201	0.0202*	0.0055	0.0268	0.0282	0.0292	24
25	0.0177	0.0179	0.0180*	0.0045	0.0246	0.0259	0.0268	25
26	0.0157	0.0159	0.0160*	0.0045	0.0226	0.0238	0.0247	26
27	0.0141	0.0142	0.0143	0.0045	0.0208	0.0221	0.0229	27
28	0.0125	0.0126	0.0127	0.0045	0.0192	0.0205	0.0212	28
29	0.0112	0.0113	0.0114	0.0045	0.0179	0.0191	0.0198	29
30	0.0099	0.0100	0.0101	0.0045	0.0166	0.0177	0.0184	30

*This maximum bare wire diameter shall be permitted to be exceeded; see 1.6.7.2
† For metric equivalent, see Table 1-10

Copyright National Electrical Manufacturers Association
Provided by IHS under license with NEMA
No reproduction or networking permitted without license from IHS

Not for Resale

MW 52-C (Single)
SINGLE GLASS FIBER COVERED HIGH TEMPERATURE ORGANIC VARNISH TREATED HEAVY FILM INSULATED RECTANGULAR AND SQUARE COPPER MAGNET WIRE THERMAL CLASS 180

INSULATING MATERIALS The glass fiber shall be electrical grade continuous filament glass yarn. The underlying film insulation shall have at least a Class 155 rating. The glass fiber covering shall be wrapped firmly, closely, evenly, and continuously around the wire. The glass fiber covering shall be treated with a high-temperature non-silicone insulating varnish.

THERMAL CLASS 180°C as defined in Part 3, para. 3.58.

GENERAL REQUIREMENTS See Part 1.

Properties	Test Procedure, See Part 3, Paragraph	Requirements
DIMENSIONS	3.2.2.2	Rectangular Wire: a. Radii—see Table 1-13 b. Thickness and width tolerances—see Table 1-14 c. Dimensions and increase in thickness—see Table STW (MW 52-C) Square wire: a. Radii—see Table SSQ (MW 52-C) b. Bare size, increase due to insulation—see Table SSQ (MW 52-C)
ADHERENCE AND FLEXIBILITY	3.3.3	No cracks visible in the film coating after 20 percent elongation. Examine with normal vision and without removal of glass fiber covering
ELONGATION	3.4	Not less than 32 percent for thicknesses of 0.049 inch (1.25 mm) and greater or 30 percent for thicknesses less than 0.049 inch (1.25 mm)
SPRINGBACK	3.7.2	Not greater than 5.5°
DIELECTRIC STRENGTH	3.8.2	Not less than 90 volts/mil (3543 v/mm) of the minimum thickness of the glass fiber covering on one side [one half the minimum calculated from Tables STW or SSQ (MW 52-C)] plus the minimum breakdown given in Part 2 for the film insulated wire.

Copyright National Electrical Manufacturers Association
Provided by IHS under license with NEMA
No reproduction or networking permitted without license from IHS

Not for Resale

Table STW (MW 52-C)
SINGLE GLASS FIBER COVERED HIGH TEMPERATURE ORGANIC VARNISH TREATED HEAVY FILM INSULATED RECTANGULAR COPPER MAGNET WIRE THERMAL CLASS 180

Maximum Increase in Thickness, Inches (mm), Due to
Single Glass Fiber Covering, Heavy Film Insulation and High Temperature Organic Varnish,
Rectangular Wire

Nominal Thickness		Nominal Width																														Nominal Thickness	
		2.00	2.12	2.24	2.37	2.50	2.65	2.80	3.00	3.15	3.35	3.55	3.75	4.00	4.25	4.50	4.75	5.00	5.30	5.60	6.00	6.30	6.70	7.10	7.50	8.00	8.50	9.00	9.50	10.0	10.6	11.2	11.8	12.5	Millimeters	
	Inches	0.079	±0.083	0.088	±0.093	0.098	±0.104	0.110	±0.118	0.124	±0.132	0.140	±0.148	0.157	±0.167	0.177	±0.187	0.197	±0.209	0.220	±0.236	0.248	±0.264	0.280	±0.295	0.315	±0.335	0.354	±0.374	0.394	±0.417	0.441	±0.465	0.492	Inches	
0.63	0.025																																		0.025	0.63
0.71	0.028																																		0.028	0.71
0.80	0.031																																		0.031	0.80
0.90	0.035	0.012" (0.305 mm)							0.013" (0.330 mm)									0.014" (0.356mm)			0.015" (0.381 mm)					0.016" (0.406 mm)									0.035	0.90
1.00	0.039																																		0.039	1.00
1.12	0.044																																		0.044	1.12
1.25	0.049																																		0.049	1.25
1.40	0.055																																		0.055	1.40
1.60	0.063																																		0.063	1.60
1.80	0.071																																		0.071	1.80
2.00	0.079																																		0.079	2.00
2.24	0.088																																		0.088	2.24
2.50	0.098																																		0.098	2.50
2.80	0.110																																		0.110	2.80
3.15	0.124																																		0.124	3.15
3.55	0.140																																		0.140	3.55
4.00	0.157																																		0.157	4.00
4.50	0.177																																		0.177	4.50
5.00	0.197																																		0.197	5.00
5.60	0.220																																		0.220	5.60

R-40 Series Intermediate Number.

EXAMPLE - Preferred Size.....0.055 x 0.110 (R-20 x R-20)
Intermediate Size.....0.055 x 0.118 (R-20 x R-40)

NOTE I– The maximum increase due to the glass fiber covering shall be permitted to be exceeded provided the overall dimension of the covered wire does not exceed the sum of the maximum thickness of the bare wire plus the maximum increase due to the heavy film insulation and single glass fiber covering.

NOTE II– The increase in thickness due to the heavy film insulation shall be in accordance with the applicable section for film insulated wire in Part 2.

NOTE III–The increase in thickness due to the single glass fiber covering shall be determined by subtracting 0.005 inch (0.127 mm) (maximum thickness of film insulation) from the maximum increase in thickness given in the table.

NOTE IV–The increase in width due to the glass fiber covering shall be equal to or less than the maximum increase in thickness given in the table. Note I applies to the increase in width as well as the increase in thickness.

NOTE V– Because it is impossible to accurately separate the glass fiber covering from the film insulation, the total minimum increase in the thickness of the film insulated glass fiber covered rectangular wire shall be the sum of the minimum increase due to the film insulation (as shown for film-insulated wire in Part 2) and the minimum increase due to the glass fiber covering. The total minimum increase shall be not less than 70 percent of the maximum increase given in the table above, rounded to the nearest 0.001 inch (0.025 mm).

Copyright National Electrical Manufacturers Association
Provided by IHS under license with NEMA
No reproduction or networking permitted without license from IHS

Not for Resale

SINGLE GLASS FIBER COVERED HIGH TEMPERATURE ORGANIC VARNISH TREATED, HEAVY FILM INSULATED SQUARE COPPER MAGNET WIRE THERMAL CLASS 180

Minimum Increase and Maximum Overall Dimensions Due to Heavy Film Insulation, Single Glass Fiber Covering and Treating Varnish

Table SSQ (MW 52-C) Inches

Square AWG Size	Bare Wire Dimensions			Nominal	Heavy-Film Insulated Single-Glass-Covered	
	Minimum	Nominal	Maximum	Radii ± 25%	Minimum Increase	Maximum Overall
0	0.3219	0.3249	0.3279	0.040	0.011	0.344
1	0.2864	0.2893	0.2922	0.040	0.010	0.307
2	0.2550	0.2576	0.2602	0.040	0.010	0.275
3	0.2271	0.2294	0.2317	0.040	0.010	0.247
4	0.2023	0.2043	0.2063	0.040	0.010	0.221
5	0.1801	0.1819	0.1837	0.040	0.009	0.198
6	0.1604	0.1620	0.1636	0.032	0.009	0.178
7	0.1429	0.1443	0.1457	0.032	0.009	0.159
8	0.1272	0.1285	0.1298	0.032	0.009	0.143
9	0.1133	0.1144	0.1155	0.026	0.009	0.129
10	0.1009	0.1019	0.1029	0.026	0.009	0.116
11	0.0897	0.0907	0.0917	0.020	0.008	0.104
12	0.0798	0.0808	0.0818	0.020	0.008	0.094
13	0.0710	0.0720	0.0730	0.016	0.008	0.085
14	0.0631	0.0641	0.0651	0.016	0.008	0.077

Table SSQ (MW 52-C) mm

Square AWG Size	Bare Wire Dimensions			Nominal	Heavy-Film-Insulated Single-Glass-Covered	
	Minimum	Nominal	Maximum	Radii ± 25%	Minimum Increase	Maximum Overall
0	8.176	8.252	8.329	1.02	0.279	8.738
1	7.275	7.348	7.422	1.02	0.254	7.798
2	6.477	6.543	6.609	1.02	0.254	6.985
3	5.768	5.827	5.885	1.02	0.254	6.274
4	5.138	5.189	5.240	1.02	0.254	5.613
5	4.575	4.620	4.666	1.02	0.229	5.029
6	4.074	4.115	4.155	0.81	0.229	4.521
7	3.630	3.665	3.701	0.81	0.229	4.039
8	3.231	3.264	3.297	0.81	0.229	3.632
9	2.878	2.906	2.934	0.66	0.229	3.277
10	2.563	2.588	2.614	0.66	0.229	2.946
11	2.278	2.304	2.329	0.51	0.203	2.642
12	2.027	2.052	2.078	0.51	0.203	2.388
13	1.803	1.829	1.854	0.41	0.203	2.159
14	1.603	1.628	1.654	0.41	0.203	1.956

Copyright National Electrical Manufacturers Association
Provided by IHS under license with NEMA
No reproduction or networking permitted without license from IHS

Not for Resale

Copyright National Electrical Manufacturers Association
Provided by IHS under license with NEMA
No reproduction or networking permitted without license from IHS

Not for Resale

MW 52-C (Double)
DOUBLE GLASS FIBER COVERED HIGH TEMPERATURE ORGANIC VARNISH TREATED, BARE OR HEAVY FILM INSULATED RECTANGULAR AND SQUARE COPPER MAGNET WIRE THERMAL CLASS 180

INSULATING MATERIALS The glass fiber shall be electrical grade continuous filament glass yarn. The underlying film insulation shall have at least a Class 155 rating. The glass fiber covering shall be wrapped firmly, closely, evenly, and continuously around the wire. Adjacent layers shall be wound in opposite directions. The glass fiber covering shall be treated with a high-temperature non-silicone insulating varnish.

THERMAL CLASS 180°C as defined in Part 3, para. 3.58.

GENERAL REQUIREMENTS See Part 1.

Properties	Test Procedure, See Part 3, Paragraph	Requirements
DIMENSIONS	3.2.2.2	Rectangular Wire: a. Radii—see Table 1-13 b. Thickness and width tolerances—see Table 1-14 c. Dimensions and increase in thickness—see Table DTW-1 and DTW-2 (MW 52-C) Square wire: a. Radii—see Table SSQ (MW 52-C) b. Bare size, increase due to insulation—see Table SSQ (MW 52-C)
ADHERENCE AND FLEXIBILITY	3.3.5	Not less than 75 volts/mil (2950 v/mm) of minimum thickness of the glass fiber covering on one side [one-half the minimum calculated from Tables DTW-1 and DTW-2 for rectangular or DSQ (MW 52-C) for square]
	3.3.3	No cracks visible in the film insulation after 20 percent elongation. Examine with normal vision and without removal of glass fiber covering
ELONGATION	3.4	Not less than 32 percent for thicknesses of 0.049 inch (1.25 mm) and greater or 30 percent for thicknesses less than 0.049 inch (1.25 mm)
SPRINGBACK	3.7.2	Not greater than 5° for Glass Fiber Covered Bare Not greater than 5.5° for Glass Fiber Covered Heavy Film Insulated
DIELECTRIC STRENGTH	3.8.2	Not less than 90 volts/mil (3543 v/mm) of the minimum thickness of the glass fiber covering on one side [one half the minimum calculated from Tables DTW-1, DTW-2, or DSQ (MW 52-C)] plus the minimum breakdown given in Part 2 for the film insulated wire

Copyright National Electrical Manufacturers Association
Provided by IHS under license with NEMA
No reproduction or networking permitted without license from IHS

Not for Resale

Table DTW-1 (MW 52-C)
DOUBLE GLASS FIBER COVERED HIGH TEMPERATURE ORGANIC VARNISH TREATED, BARE RECTANGULAR AND SQUARE COPPER MAGNET WIRE
THERMAL CLASS 180

Maximum Increase in Thickness, Inches (mm), Due to
Double Glass Fiber Covering, Heavy Film Insulation and High Temperature Organic Varnish,
Rectangular Wire

Nominal Thickness		Nominal Width																													Nominal Thickness	
		2.00	2.12	2.24	2.37	2.50	2.65	2.80	3.00	3.15	3.35	3.55	3.75	4.00	4.25	4.50	4.75	5.00	5.30	5.60	6.00	6.30	6.70	7.10	7.50	8.00	8.50	9.00	9.50	10.0	10.6	11.2	11.8	12.5	Millimeters	
	Inches	0.079	±0.083	0.088	±0.093	0.098	±0.104	0.110	±0.118	0.124	±0.132	0.140	±0.148	0.157	±0.167	0.177	±0.187	0.197	±0.209	0.220	±0.236	0.248	±0.264	0.280	±0.295	0.315	±0.335	0.354	±0.374	0.394	±0.417	0.441	±0.465	0.492	Inches	
0.63	0.025	0.012" (0.305 mm)							0.013" (0.330 mm)			0.014" (0.356 mm)						0.015" (0.381 mm)				0.016" (0.406 mm)						0.018" (0.457 mm)							0.025	0.63
0.71	0.028																																		0.028	0.71
0.80	0.031																																		0.031	0.80
0.90	0.035																																		0.035	0.90
1.00	0.039																																		0.039	1.00
1.12	0.044																																		0.044	1.12
1.25	0.049																																		0.049	1.25
1.40	0.055																																		0.055	1.40
1.60	0.063																																		0.063	1.60
1.80	0.071																																		0.071	1.80
2.00	0.079																																		0.079	2.00
2.24	0.088																																		0.088	2.24
2.50	0.098																																		0.098	2.50
2.80	0.110																							0.017" (0.432 mm)									0.019" (0.483 mm)		0.110	2.80
3.15	0.124																																		0.124	3.15
3.55	0.140																																		0.140	3.55
4.00	0.157																																		0.157	4.00
4.50	0.177																																		0.177	4.50
5.00	0.197																																		0.197	5.00
5.60	0.220																																		0.220	5.60

R-40 Series Intermediate Number.

EXAMPLE - Preferred Size.....0.055 x 0.110 (R-20 x R-20)
Intermediate Size.....0.055 x 0.118 (R-20 x R-40)

NOTE I– The maximum increase due to the glass fiber covering shall be permitted to be exceeded provided the overall dimension of the covered wire does not exceed the sum of the maximum thickness of the bare wire plus the maximum increase due to the glass fiber covering.

NOTE II– The minimum increase due to the glass fiber covering shall be not less than 70 percent of the maximum shown in the table above, rounded to the nearest 0.001 inch (0.025 mm).

NOTE III–The increase in width due to the glass fiber covering shall be equal to or less than the maximum increase in thickness given in the table. Note I applies to the increase in width as well as the increase in thickness.

Copyright National Electrical Manufacturers Association
Provided by IHS under license with NEMA
No reproduction or networking permitted without license from IHS

Not for Resale

TABLE DTW-2 (MW 52-C)
DOUBLE GLASS FIBER COVERED HIGH TEMPERATURE ORGANIC VARNISH TREATED, HEAVY FILM INSULATED RECTANGULAR AND SQUARE COPPER MAGNET WIRE
THERMAL CLASS 180

Maximum Increase in Thickness, Inches (mm), Due to Heavy Film Insulation, Double Glass Fiber Covering, and High Temperature Organic Varnish, Rectangular Wire

Nominal Thickness		Nominal Width																													Nominal Thickness	
		2.00	2.12	2.24	2.37	2.50	2.65	2.80	3.00	3.15	3.35	3.55	3.75	4.00	4.25	4.50	4.75	5.00	5.30	5.60	6.00	6.30	6.70	7.10	7.50	8.00	8.50	9.00	9.50	10.0	10.6	11.2	11.8	12.5	Millimeters	
	Inches	0.079	† 0.083	0.088	† 0.093	0.098	† 0.104	0.110	† 0.118	0.124	† 0.132	0.140	† 0.148	0.157	† 0.167	0.177	† 0.187	0.197	† 0.209	0.220	† 0.236	0.248	† 0.264	0.280	† 0.295	0.315	† 0.335	0.354	† 0.374	0.394	† 0.417	0.441	† 0.465	0.492	Inches	
0.63	0.025																																		0.025	0.63
0.71	0.028																																		0.028	0.71
0.80	0.031																																		0.031	0.80
0.90	0.035	0.017" (0.432 mm)							0.018" (0.457 mm)				0.019" (0.483 mm)					0.020" (0.508 mm)				0.021" (0.533 mm)					0.023" (0.584 mm)								0.035	0.90
1.00	0.039																																		0.039	1.00
1.12	0.044																																		0.044	1.12
1.25	0.049																																		0.049	1.25
1.40	0.055																																		0.055	1.40
1.60	0.063																																		0.063	1.60
1.80	0.071																																		0.071	1.80
2.00	0.079																																		0.079	2.00
2.24	0.088																																		0.088	2.24
2.50	0.098																																		0.098	2.50
2.80	0.110																							0.022" (0.559 mm)											0.110	2.80
3.15	0.124																																0.024" (0.610 mm)		0.124	3.15
3.55	0.140																																		0.140	3.55
4.00	0.157																																		0.157	4.00
4.50	0.177																																		0.177	4.50
5.00	0.197																																		0.197	5.00
5.60	0.220																																		0.220	5.60

R-40 Series Intermediate Number.

EXAMPLE - Preferred Size.....0.055 x 0.110 (R-20 x R-20)
Intermediate Size.....0.055 x 0.118 (R-20 x R-40)

NOTE I– The maximum increase due to the glass fiber covering shall be permitted to be exceeded provided the overall dimension of the covered wire does not exceed the sum of the maximum thickness of the bare wire plus the maximum increase given in Table DTW-2 (MW 52-C).

NOTE II– The increase in thickness due to th heavy film insulation shall be in accordance with the applicable section for film insulated wire in Part 2.

NOTE III– The minimum increase due to the glass fiber covering shall be not less than 70 percent of the maximum shown in the Table DTW-1 (MW 52-C), rounded to the nearest 0.001 inch (0.025 mm).

NOTE IV–The increase in width due to the glass fiber covering shall be equal to or less than the maximum increase in thickness given in Table DTW-1 (MW 52-C). Note I applies to the increase in width as well as the increase in thickness.

NOTE V– Because it is impossible to accurately separate the glass fiber covering from the film insulation, the total minimum increase in the thickness of a film insulated and glass fiber covered rectangular wire shall be the sum of the minimum increase due to the film insulation (as shown for film insulated wire in Part 2) and the minimum increase due to the glass fiber covering. The total minimum increase shall be not less than 70 percent of the maximum increase given in Table DTW-1 (MW 52-C) plus the minimum for the film insulated wire, rounded to the nearest 0.001 inch (0.025 mm).

Copyright National Electrical Manufacturers Association
Provided by IHS under license with NEMA
No reproduction or networking permitted without license from IHS

Not for Resale

DOUBLE GLASS FIBER COVERED HIGH TEMPERATURE ORGANIC VARNISH TREATED, BARE OR HEAVY FILM INSULATED SQUARE COPPER MAGNET WIRE THERMAL CLASS 180

Minimum Increase and Maximum Overall Dimensions Due to Glass Fiber Covering and Treating Varnish

Table DSQ (MW 52-C) Inches

Square AWG Size	Bare Wire Dimensions			Nominal	Bare Double-Glass-Covered		Heavy-Film-Insulated Double-Glass-Covered	
	Minimum inches	Nominal inches	Maximum inches	Radii ± 25% inches	Minimum Increase inches	Maximum Overall inches	Minimum Increase* inches	Maximum Overall inches
0	0.3219	0.3249	0.3279	0.040	0.013	0.346	0.016	0.351
1	0.2864	0.2893	0.2922	0.040	0.012	0.309	0.015	0.314
2	0.2550	0.2576	0.2602	0.040	0.012	0.277	0.015	0.282
3	0.2271	0.2294	0.2317	0.040	0.011	0.248	0.014	0.253
4	0.2023	0.2043	0.2063	0.040	0.011	0.222	0.014	0.227
5	0.1801	0.1819	0.1837	0.040	0.011	0.199	0.014	0.204
6	0.1604	0.1620	0.1636	0.032	0.011	0.179	0.014	0.184
7	0.1429	0.1443	0.1457	0.032	0.010	0.160	0.013	0.165
8	0.1272	0.1285	0.1298	0.032	0.009	0.144	0.012	0.149
9	0.1133	0.1144	0.1155	0.026	0.009	0.129	0.012	0.134
10	0.1009	0.1019	0.1029	0.026	0.009	0.116	0.012	0.121
11	0.0897	0.0907	0.0917	0.020	0.008	0.104	0.011	0.109
12	0.0798	0.0808	0.0818	0.020	0.008	0.094	0.011	0.099
13	0.0710	0.0720	0.0730	0.016	0.008	0.085	0.011	0.090
14	0.0631	0.0641	0.0651	0.016	0.008	0.077	0.011	0.082

* Minimum increase including film insulation

Table DSQ (MW 52-C) mm

Square AWG Size	Bare Wire Dimensions			Nominal	Bare Double-Glass-Covered		Heavy-Film-Insulated Double-Glass-Covered	
	Minimum mm	Nominal mm	Maximum mm	Radii ± 25% mm	Minimum Increase mm	Maximum Overall mm	Minimum Increase* mm	Maximum Overall mm
0	8.176	8.252	8.329	1.02	0.330	8.788	0.406	8.915
1	7.275	7.348	7.422	1.02	0.305	7.849	0.381	7.976
2	6.477	6.543	6.609	1.02	0.305	7.036	0.381	7.163
3	5.768	5.827	5.885	1.02	0.279	6.299	0.356	6.426
4	5.138	5.189	5.240	1.02	0.279	5.639	0.356	5.766
5	4.575	4.620	4.666	1.02	0.279	5.055	0.356	5.182
6	4.074	4.115	4.155	0.81	0.279	4.547	0.356	4.674
7	3.630	3.665	3.701	0.81	0.254	4.064	0.330	4.191
8	3.231	3.264	3.297	0.81	0.229	3.658	0.305	3.785
9	2.878	2.906	2.934	0.66	0.229	3.277	0.305	3.404
10	2.563	2.588	2.614	0.66	0.229	2.946	0.305	3.073
11	2.278	2.304	2.329	0.51	0.203	2.642	0.279	2.769
12	2.027	2.052	2.078	0.51	0.203	2.388	0.279	2.515
13	1.803	1.829	1.854	0.41	0.203	2.159	0.279	2.286
14	1.603	1.628	1.654	0.41	0.203	1.956	0.279	2.083

* Minimum increase including film insulation

Copyright National Electrical Manufacturers Association
Provided by IHS under license with NEMA
No reproduction or networking permitted without license from IHS

Not for Resale

MW 53-C (Single)
SINGLE POLYESTER GLASS FIBER COVERED HIGH TEMPERATURE ORGANIC VARNISH TREATED HEAVY FILM INSULATED RECTANGULAR AND SQUARE COPPER MAGNET WIRE THERMAL CLASS 180

INSULATING MATERIALS The fiber covering shall shall consist a combination of polyester and glass fibers. The glass fibers shall be electrical grade continuous filament glass yarn. The polyester fiber covering shall be a high grade yarn resulting from the linear polymerization of ethylene glycol and terephthalic acid. The maximum content by weight of polyester fiber in the yarn shall not exceed 50 percent. The underlying film insulation shall have at least a Class 155 rating. The polyester glass fiber covering shall be wrapped firmly, closely, evenly, and continuously around the wire. The polyester glass fiber covering shall be fused and treated with a high-temperature non-silicone insulating varnish.

THERMAL CLASS 180°C as defined in Part 3, para. 3.58.

GENERAL REQUIREMENTS See Part 1.

Properties	Test Procedure, See Part 3, Paragraph	Requirements
DIMENSIONS	3.2.2.2	Rectangular Wire: a. Radii—see Table 1-13 b. Thickness and width tolerances—see Table 1-14 c. Dimensions and increase in thickness—see Table STW (MW 53-C) Square Wire: a. Radii—see Table SSQ (MW 53-C) b. Bare size, increase due to insulation—see Table SSQ (MW 53-C)
ADHERENCE AND FLEXIBILITY	3.3.3	No cracks visible in the film insulation after 20 percent elongation. Examine with normal vision and without removal of glass fiber covering
ELONGATION	3.4	Not less than 32 percent for thicknesses of 0.049 inch (1.25 mm) and greater or 30 percent for thicknesses less than 0.049 inch (1.25 mm)
SPRINGBACK	3.7.2	Not greater than 5.5°
DIELECTRIC STRENGTH	3.8.2	Not less than 90 volts/mil (3543 v/mm) of the minimum thickness of the polyester glass fiber covering on one side [one half the minimum calculated from Table STW (MW 53-C) or Table SSQ (MW 53-C)] plus the minimum breakdown given in Part 2 for the film insulated wire.

Copyright National Electrical Manufacturers Association
Provided by IHS under license with NEMA
No reproduction or networking permitted without license from IHS

Not for Resale

Table STW (MW 53-C)
SINGLE POLYESTER GLASS FIBER COVERED HIGH TEMPERATURE ORGANIC VARNISH TREATED HEAVY FILM INSULATED RECTANGULAR COPPER MAGNET WIRE
THERMAL CLASS 180

Maximum Increase in Thickness, Inches (mm), Due to
Single Polyester glass Fiber Covering, Heavy Film Insulation and High Temperature Organic Varnish,
Rectangular Wire

Nominal Thickness		Nominal Width																										Nominal Thickness	
		2.00	2.12	2.24	2.37	2.50	2.65	2.80	3.00	3.15	3.35	3.55	3.75	4.00	4.25	4.50	4.75	5.00	5.30	5.60	6.00	6.30	6.70	7.10	7.50	8.00	8.50	9.00	9.50	10.0	10.6	11.2	11.8	12.5	Millimeters	
	Inches	0.079	†0.083	0.088	†0.093	0.098	†0.104	0.110	†0.118	0.124	†0.132	0.140	†0.148	0.157	†0.167	0.177	†0.187	0.197	†0.209	0.220	†0.236	0.248	†0.264	0.280	†0.295	0.315	†0.335	0.354	†0.374	0.394	†0.417	0.441	†0.465	0.492	Inches	
0.63	0.025																																		0.025	0.63
0.71	0.028																																		0.028	0.71
0.80	0.031																																		0.031	0.80
0.90	0.035																																		0.035	0.90
1.00	0.039	0.010" (0.254 mm)								0.011" (0.279 mm)								0.012" (0.305 mm)						0.013" (0.330 mm)											0.039	1.00
1.12	0.044																																		0.044	1.12
1.25	0.049																																		0.049	1.25
1.40	0.055																																		0.055	1.40
1.60	0.063																																		0.063	1.60
1.80	0.071																																		0.071	1.80
2.00	0.079																																		0.079	2.00
2.24	0.088																																		0.088	2.24
2.50	0.098																																		0.098	2.50
2.80	0.110																																		0.110	2.80
3.15	0.124																																		0.124	3.15
3.55	0.140																																		0.140	3.55
4.00	0.157																																		0.157	4.00
4.50	0.177																																		0.177	4.50
5.00	0.197																																		0.197	5.00
5.60	0.220																																		0.220	5.60

R-40 Series Intermediate Number.

EXAMPLE - Preferred Size.....0.055 x 0.110 (R-20 x R-20)
Intermediate Size.....0.055 x 0.118 (R-20 x R-40)

NOTE I– The maximum increase due to the glass fiber covering shall be permitted to be exceeded provided the overall dimension of the covered wire does not exceed the sum of the maximum thickness of the bare wire plus the maximum increase due to the heavy film insulation and single polyester glass fiber covering.

NOTE II– The increase in thickness due to the heavy film insulation shall be in accordance with the applicable section for film insulated wire in Part 2.

NOTE III–The increase in thickness due to the single polyester glass fiber covering shall be determined by subtracting 0.005 inch (0.127 mm) (maximum thickness of film insulation) from the maximum increase in thickness given in the table.

NOTE IV–The increase in width due to the polyester glass fiber covering shall be equal to or less than the maximum increase in thickness given in the table. Note I applies to the increase in width as well as the increase in thickness.

NOTE–V- Because it is impossible to accurately separate the polyester glass fiber covering from the film insulation, the total minimum increase in the thickness of the film insulated polyester glass fiber covered rectangular wire shall be the sum of the minimum increase due to the film insulation (as shown for film-insulated wire in Part 2) and the minimum increase due to the polyester glass fiber covering. The total minimum increase shall be not less than 70 percent of the maximum increase given in the table above, rounded to the nearest 0.001 inch (0.025 mm).

Copyright National Electrical Manufacturers Association
Provided by IHS under license with NEMA
No reproduction or networking permitted without license from IHS

Not for Resale

SINGLE POLYESTER GLASS FIBER COVERED HIGH TEMPERATURE ORGANIC VARNISH TREATED, HEAVY FILM INSULATED SQUARE COPPER MAGNET WIRE THERMAL CLASS 180

Minimum Increase and Maximum Overall Dimensions Due to Heavy Film Insulation, Single Polyester Glass Fiber Covering and High Temperature Organic Varnish

Table SSQ (MW 53-C) Inches

Square AWG Size	Bare Wire Dimensions			Nominal	Heavy Film Insulated Single Polyester Glass Covered	
	Minimum	Nominal	Maximum	Radii ± 25%	Minimum Increase	Maximum Overall
0	0.3219	0.3249	0.3279	0.040	0.009	0.341
1	0.2864	0.2893	0.2922	0.040	0.009	0.305
2	0.2550	0.2576	0.2602	0.040	0.008	0.272
3	0.2271	0.2294	0.2317	0.040	0.008	0.244
4	0.2023	0.2043	0.2063	0.040	0.008	0.219
5	0.1801	0.1819	0.1837	0.040	0.008	0.196
6	0.1604	0.1620	0.1636	0.032	0.008	0.175
7	0.1429	0.1443	0.1457	0.032	0.008	0.157
8	0.1272	0.1285	0.1298	0.032	0.008	0.141
9	0.1133	0.1144	0.1155	0.026	0.008	0.127
10	0.1009	0.1019	0.1029	0.026	0.007	0.113
11	0.0897	0.0907	0.0917	0.020	0.007	0.102
12	0.0798	0.0808	0.0818	0.020	0.007	0.092
13	0.0710	0.0720	0.0730	0.016	0.007	0.084
14	0.0631	0.0641	0.0651	0.016	0.007	0.076

Table SSQ (MW 53-C) mm

Square AWG Size	Bare Wire Dimensions			Nominal	Heavy Film Insulated Single Polyester Glass Covered	
	Minimum	Nominal	Maximum	Radii ± 25%	Minimum Increase	Maximum Overall
0	8.176	8.252	8.329	1.02	0.229	8.661
1	7.275	7.348	7.422	1.02	0.229	7.747
2	6.477	6.543	6.609	1.02	0.203	6.909
3	5.768	5.827	5.885	1.02	0.203	6.198
4	5.138	5.189	5.240	1.02	0.203	5.563
5	4.575	4.620	4.666	1.02	0.203	4.978
6	4.074	4.115	4.155	0.81	0.203	4.445
7	3.630	3.665	3.701	0.81	0.203	3.988
8	3.231	3.264	3.297	0.81	0.203	3.581
9	2.878	2.906	2.934	0.66	0.203	3.226
10	2.563	2.588	2.614	0.66	0.178	2.870
11	2.278	2.304	2.329	0.51	0.178	2.591
12	2.027	2.052	2.078	0.51	0.178	2.337
13	1.803	1.829	1.854	0.41	0.178	2.134
14	1.603	1.628	1.654	0.41	0.178	1.930

Copyright National Electrical Manufacturers Association
Provided by IHS under license with NEMA
No reproduction or networking permitted without license from IHS

Not for Resale

Copyright National Electrical Manufacturers Association
Provided by IHS under license with NEMA
No reproduction or networking permitted without license from IHS

Not for Resale

MW 53-C (Double)
DOUBLE POLYESTER GLASS FIBER COVERED HIGH TEMPERATURE ORGANIC VARNISH TREATED BARE OR HEAVY FILM INSULATED RECTANGULAR AND SQUARE COPPER MAGNET WIRE THERMAL CLASS 180

INSULATING MATERIALS The fiber covering shall shall consist a combination of polyester and glass fibers. The glass fibers shall be electrical grade continuous filament glass yarn. The polyester fiber covering shall be a high grade yarn resulting from the linear polymerization of ethylene glycol and terephthalic acid. The maximum content by weight of polyester fiber in the yarn shall not exceed 50 percent. If an underlying film insulation used, it shall have at least a Class 155 rating. The polyester glass fiber covering shall be wrapped firmly, closely, evenly, and continuously around the wire. Adjacent layers shall be wound in opposite directions. The polyester glass fiber covering shall be fused and treated with a high-temperature non-silicone insulating varnish. When specified, either layer may consist of 100 percent glass fiber.

THERMAL CLASS 180°C as defined in Part 3, para. 3.58.

GENERAL REQUIREMENTS See Part 1.

Properties	Test Procedure, See Part 3, Paragraph	Requirements
DIMENSIONS	3.2.2.2	Rectangular Wire: a. Radii—see Table 1-13 b. Thickness and width tolerances—see Table 1-14 c. Dimensions and increase in thickness, see Table DTW-1 and DTW-2 (MW 53-C) Square Wire: a. Radii—see Table DSQ (MW 53-C) b. Bare size, increase due to insulation—see Table DSQ (MW 53-C)
ADHERENCE AND FLEXIBILITY	3.3.5	Not less than 75 volts/mil (2950 v/mm) of minimum thickness of the polyester glass fiber covering on one side [one-half the minimum calculated from Tables DTW-1, DTW-2 or DSQ (MW 55-C)] over bare wire.
	3.3.3	No cracks visible in the film insulation after 20 percent elongation. Examine with normal vision and without removal of polyester glass fiber covering
ELONGATION	3.4	Not less than 32 percent for thicknesses of 0.049 inch (1.25 mm) and greater or 30 percent for thicknesses less than 0.049 inch (1.25 mm)
SPRINGBACK	3.7.2	Not greater than 5° for Polyester Glass Fiber Covered Bare Not greater than 5.5° for Polyester Glass Fiber Covered Heavy Film Insulated Wire
DIELECTRIC STRENGTH	3.8.2	Not less than 90 volts/mil (3543 v/mm) of the minimum thickness of the polyester glass fiber covering on one side [one half the minimum calculated from Tables DTW-1, DTW-2, or DSQ (MW 53-C) plus the minimum breakdown given in Part 2 for the film insulation when present

Copyright National Electrical Manufacturers Association
Provided by IHS under license with NEMA
No reproduction or networking permitted without license from IHS

Not for Resale

TABLE DTW-1 (MW 53-C)
DOUBLE POLYESTER GLASS FIBER COVERED HIGH TEMPERATURE ORGANIC VARNISH TREATED BARE RECTANGULAR COPPER MAGNET WIRE THERMAL CLASS 180

Maximum Increase in Thickness, Inches (mm), Due to
Double Polyester glass Fiber Covering, and High Temperature Organic Varnish,
Rectangular Wire

Nominal Thickness		Nominal Width																													Nominal Thickness	
		2.00	2.12	2.24	2.37	2.50	2.65	2.80	3.00	3.15	3.35	3.55	3.75	4.00	4.25	4.50	4.75	5.00	5.30	5.60	6.00	6.30	6.70	7.10	7.50	8.00	8.50	9.00	9.50	10.0	10.6	11.2	11.8	12.5	Millimeters	
	Inches	0.079	†0.083	0.088	†0.093	0.098	†0.104	0.110	†0.118	0.124	†0.132	0.140	†0.148	0.157	†0.167	0.177	†0.187	0.197	†0.209	0.220	†0.236	0.248	†0.264	0.280	†0.295	0.315	†0.335	0.354	†0.374	0.394	†0.417	0.441	†0.465	0.492	Inches	
0.63	0.025	0.011" (0.279 mm)								0.012" (0.305 mm)				0.013" (0.330 mm)				0.014" (0.356 mm)					0.015" (0.381 mm)												0.016" (0.406 mm)	0.025	0.63
0.71	0.028																																		0.028	0.71
0.80	0.031																																		0.031	0.80
0.90	0.035																																		0.035	0.90
1.00	0.039																																		0.039	1.00
1.12	0.044																																		0.044	1.12
1.25	0.049																																		0.049	1.25
1.40	0.055																																		0.055	1.40
1.60	0.063																																		0.063	1.60
1.80	0.071																																		0.071	1.80
2.00	0.079																																		0.079	2.00
2.24	0.088																																		0.088	2.24
2.50	0.098																																		0.098	2.50
2.80	0.110									0.013"																									0.110	2.80
3.15	0.124																						0.015"												0.124	3.15
3.55	0.140																																		0.140	3.55
4.00	0.157																																		0.157	4.00
4.50	0.177																	0.015"																	0.177	4.50
5.00	0.197																																		0.197	5.00
5.60	0.220																																		0.220	5.60

R-40 Series Intermediate Number.

EXAMPLE - Preferred Size.....0.055 x 0.110 (R-20 x R-20)
Intermediate Size.....0.055 x 0.118 (R-20 x R-40)

NOTE I– The maximum increase due to the glass fiber covering shall be permitted to be exceeded provided the overall dimension of the covered wire does not exceed the sum of the maximum thickness of the bare wire plus the maximum increase due to the polyester glass fiber covering.

NOTE II– The minimum increase due to the polyester glass fiber covering shall be not less than 70 percent of the maximum shown in the table above, rounded to the nearest 0.001 inch (0.025 mm).

NOTE III–The increase in width due to the polyester glass fiber covering shall be equal to or less than the maximum increase in thickness given in the table. Note I applies to the increase in width as well as the increase in thickness.

Copyright National Electrical Manufacturers Association
Provided by IHS under license with NEMA
No reproduction or networking permitted without license from IHS

Not for Resale

TABLE DTW-2 (MW 53-C)
DOUBLE POLYESTER GLASS FIBER COVERED HIGH TEMPERATURE ORGANIC VARNISH TREATED HEAVY FILM INSULATED RECTANGULAR COPPER MAGNET WIRE THERMAL CLASS 180

Maximum Increase in Thickness, Inches (mm), Due to Heavy Film Insulation, Double Polyester Glass Fiber Covering, and High Temperature Organic Varnish, Rectangular Wire

Nominal Thickness		Nominal Width																														Nominal Thickness	
		2.00	2.12	2.24	2.37	2.50	2.65	2.80	3.00	3.15	3.35	3.55	3.75	4.00	4.25	4.50	4.75	5.00	5.30	5.60	6.00	6.30	6.70	7.10	7.50	8.00	8.50	9.00	9.50	10.0	10.6	11.2	11.8	12.5	Millimeters	
	Inches	0.079	†0.083	0.088	†0.093	0.098	†0.104	0.110	†0.118	0.124	†0.132	0.140	†0.148	0.157	†0.167	0.177	†0.187	0.197	†0.209	0.220	†0.236	0.248	†0.264	0.280	†0.295	0.315	†0.335	0.354	†0.374	0.394	†0.417	0.441	†0.465	0.492	Inches	
0.63	0.025																																		0.025	0.63
0.71	0.028																																		0.028	0.71
0.80	0.031																																		0.031	0.80
0.90	0.035																																		0.035	0.90
1.00	0.039																																		0.039	1.00
1.12	0.044																																		0.044	1.12
1.25	0.049																																		0.049	1.25
1.40	0.055																																		0.055	1.40
1.60	0.063																																		0.063	1.60
1.80	0.071																																		0.071	1.80
2.00	0.079																																		0.079	2.00
2.24	0.088																																		0.088	2.24
2.50	0.098																																		0.098	2.50
2.80	0.110																																		0.110	2.80
3.15	0.124																																		0.124	3.15
3.55	0.140																																		0.140	3.55
4.00	0.157																																		0.157	4.00
4.50	0.177																																		0.177	4.50
5.00	0.197																																		0.197	5.00
5.60	0.220																																		0.220	5.60

0.016" (0.406 mm)
0.017" (0.432 mm)
0.018" (0.457 mm)
0.019" (0.483 mm)
0.020" (0.508 mm)
0.021" (0.533 mm)
0.018"
0.020"
0.020"

R-40 Series Intermediate Number.

EXAMPLE - Preferred Size.....0.055 x 0.110 (R-20 x R-20)
Intermediate Size.....0.055 x 0.118 (R-20 x R-40)

NOTE I– The maximum increase due to the polyester glass fiber covering shall be permitted to be exceeded provided the overall dimension of the covered wire does not exceed the sum of the maximum thickness of the bare wire plus the maximum increase given in Table DTW-2 (MW 53-C).

NOTE II– The maximum increase due to the heavy film insulation shall be in accordance with the applicable section for film insulated wire in Part 2.

NOTE III–The minimum increase due to the polyester glass fiber covering shall be not less than 70 percent of the maximum shown in the Table DTW-1 (MW 53-C), rounded to the nearest 0.001 inch (0.025 mm).

NOTE IV–The increase in width due to the polyester glass fiber covering shall be equal to or less than the maximum increase in thickness given in Table DTW-1 (MW 53-C). Note I applies to the increase in width as well as the increase in thickness.

NOTE V– Because it is impossible to accurately separate the polyester glass fiber covering from the film insulation, the total minimum increase in the thickness of a film insulated and fiber covered rectangular wire shall be the sum of the minimum increase due to the film insulation (as shown for film insulated wire in Part 2) and the minimum increase due to the polyester fiber covering. The total minimum increase shall be not less than 70 percent of the maximum increase given in Table DTW-1 (MW 53-C) plus the minimum for the film insulated wire, rounded to the nearest 0.001 inch (0.025 mm).

Copyright National Electrical Manufacturers Association
Provided by IHS under license with NEMA
No reproduction or networking permitted without license from IHS

Not for Resale

DOUBLE POLYESTER GLASS FIBER COVERED HIGH TEMPERATURE ORGANIC VARNISH TREATED, BARE OR HEAVY FILM INSULATED SQUARE COPPER MAGNET WIRE THERMAL CLASS 180

Minimum Increase and Maximum Overall Dimensions Due to Polyester Glass Fiber Covering and High Temperature Organic Varnish

Table DSQ (MW 53-C) Inches

Square AWG Size	Bare Wire Dimensions			Nominal	Bare Double Polyester Glass Covered		Heavy Film Insulated Double Polyester Glass Covered	
	Minimum	Nominal	Maximum	Radii ± 25%	Minimum Increase	Maximum Overall	Minimum Increase*	Maximum Overall
0	0.3219	0.3249	0.3279	0.040	0.012	0.344	0.015	0.349
1	0.2864	0.2893	0.2922	0.040	0.012	0.308	0.015	0.313
2	0.2550	0.2576	0.2602	0.040	0.012	0.276	0.015	0.281
3	0.2271	0.2294	0.2317	0.040	0.012	0.248	0.015	0.253
4	0.2023	0.2043	0.2063	0.040	0.012	0.222	0.015	0.227
5	0.1801	0.1819	0.1837	0.040	0.011	0.199	0.014	0.204
6	0.1604	0.1620	0.1636	0.032	0.011	0.179	0.014	0.184
7	0.1429	0.1443	0.1457	0.032	0.010	0.160	0.013	0.165
8	0.1272	0.1285	0.1298	0.032	0.009	0.143	0.012	0.148
9	0.1133	0.1144	0.1155	0.026	0.009	0.129	0.012	0.134
10	0.1009	0.1019	0.1029	0.026	0.008	0.115	0.011	0.120
11	0.0897	0.0907	0.0917	0.020	0.008	0.103	0.011	0.108
12	0.0798	0.0808	0.0818	0.020	0.008	0.093	0.011	0.098
13	0.0710	0.0720	0.0730	0.016	0.008	0.084	0.011	0.089
14	0.0631	0.0641	0.0651	0.016	0.008	0.076	0.011	0.081

* Minimum increase including film insulation.

Table DSQ (MW 53-C) mm

Square AWG Size	Bare Wire Dimensions			Nominal	Bare Double Polyester Glass Covered		Heavy Film Insulated Double Polyester Glass Covered	
	Minimum	Nominal	Maximum	Radii ± 25%	Minimum Increase	Maximum Overall	Minimum Increase*	Maximum Overall
0	8.176	8.252	8.329	1.02	0.305	8.738	0.381	8.865
1	7.275	7.348	7.422	1.02	0.305	7.823	0.381	7.950
2	6.477	6.543	6.609	1.02	0.305	7.010	0.381	7.137
3	5.768	5.827	5.885	1.02	0.305	6.299	0.381	6.426
4	5.138	5.189	5.240	1.02	0.305	5.639	0.381	5.766
5	4.575	4.620	4.666	1.02	0.279	5.055	0.356	5.182
6	4.074	4.115	4.155	0.81	0.279	4.547	0.356	4.674
7	3.630	3.665	3.701	0.81	0.254	4.064	0.330	4.191
8	3.231	3.264	3.297	0.81	0.229	3.632	0.305	3.759
9	2.878	2.906	2.934	0.66	0.229	3.277	0.305	3.404
10	2.563	2.588	2.614	0.66	0.203	2.921	0.279	3.048
11	2.278	2.304	2.329	0.51	0.203	2.616	0.279	2.743
12	2.027	2.052	2.078	0.51	0.203	2.362	0.279	2.489
13	1.803	1.829	1.854	0.41	0.203	2.134	0.279	2.261
14	1.603	1.628	1.654	0.41	0.203	1.930	0.279	2.057

* Minimum increase including film insulation.

Copyright National Electrical Manufacturers Association
Provided by IHS under license with NEMA
No reproduction or networking permitted without license from IHS

Not for Resale

MW 60-A (Paper)
AROMATIC POLYAMIDE PAPER COVERED RECTANGULAR AND SQUARE ALUMINUM MAGNET WIRE THERMAL CLASS 220

INSULATING MATERIALS The insulating material shall be an aromatic polyamide paper. The paper covering shall consist of one or more tapes, each wrapped firmly, closely, evenly, and continuously around the wire in a configuration necessary to provide the specified number of tape layers (thicknesses of paper). The paper covering shall consist of at least two thicknesses of paper with not less than 40-percent overlap. If an adhesive is used, this material shall perform in the applicable insulation system as required in Part 3, para. 3.58.

THERMAL CLASS 220°C as defined in Part 3, para. 3.58.

GENERAL REQUIREMENTS See Part 1.

Properties	Test Procedure, See Part 3, Paragraph	Requirements
DIMENSIONS	3.2.2.2	Rectangular Wire: a. Radii—see Table 1-13 b. Thickness and width tolerances—see Table 1-14 c. Increase in thickness due to paper covering—see Table TW (MW 60-A). Square wire: Bare wire dimensions and tolerances, radii and increase in dimensions due to paper covering-see Tables SQ-2 (MW 60-A) for two thicknesses of paper and SQ-3 (MW 60-A) for three thicknesses of paper. The increase in thickness for coverings having more than three thicknesses of paper shall be as follows: $\text{Minimum increase in thickness} = 2\left(\text{Number of paper thickness} - 1\right)\left(\text{Nominal tape thickness}\right)$ $\text{Minimum increase in thickness} = 2\left(\text{Number of paper thickness} + 1\right)\left(\text{Nominal tape thickness}\right)$
ELONGATION	3.4	Not less than 15 percent
DIELECTRIC STRENGTH	3.8.2	Not less than 300 volts/mil (11800 v/mm) of the minimum thickness of the paper covering on one side (one half the minimum increase)
COVERAGE	3.12.2	Covering shall not loosen appreciably nor open sufficiently to expose the bare wire after bending around a mandrel having a diameter 6 times the thickness of the bare wire.

Copyright National Electrical Manufacturers Association
Provided by IHS under license with NEMA
No reproduction or networking permitted without license from IHS

Not for Resale

AROMATIC POLYAMIDE PAPER COVERED RECTANGULAR AND SQUARE ALUMINUM MAGNET WIRE THERMAL CLASS 220

Table TW Rectangular (MW 60-A) Increase in Thickness Due to Aromatic Polyamide Paper Covering

Number of Tapes	Nominal Tape Thickness = 0.002 inches (.051 mm)				Nominal Tape Thickness = 0.003 inches (.076 mm)			
	Minimum		Maximum		Minimum		Maximum	
	inches	mm	inches	mm	inches	mm	inches	mm
2	0.004	0.102	0.012	0.305	0.006	0.152	0.018	0.457
3	0.008	0.203	0.016	0.406	0.012	0.305	0.024	0.610

1 - The increase in width due to the paper covering shall be equal to or less than the increase in thickness.

2 - The maximum increase shall be permitted to be exceeded provided the maximum overall dimensions of the covered wire does not exceed the sum of the maximum thickness or width of the bare wire plus the maximum increase due to the covering.

Table SQ-2 Square (MW 60-A) Inches—Dimensions 1—14 AWG—Two Tape Thicknesses

Square AWG Size	Bare Wire Dimensions			Nominal Radii ±25%	Nom. Tape = 0.002"		Nom. Tape = 0.003"	
	Minimum	Nominal	Maximum		Minimum Increase	Maximum** Overall	Minimum Increase	Maximum** Overall
0	0.3219	0.3249	0.3279	0.040	0.004	0.3399	0.006	0.3459
1	0.2864	0.2893	0.2922	0.040	0.004	0.3042	0.006	0.3102
2	0.2550	0.2576	0.2602	0.040	0.004	0.2722	0.006	0.2782
3	0.2271	0.2294	0.2317	0.040	0.004	0.2437	0.006	0.2497
4	0.2023	0.2043	0.2063	0.040	0.004	0.2183	0.006	0.2243
5	0.1801	0.1819	0.1837	0.040	0.004	0.1957	0.006	0.2017
6	0.1604	0.1620	0.1636	0.032	0.004	0.1756	0.006	0.1816
7	0.1429	0.1443	0.1457	0.032	0.004	0.1577	0.006	0.1637
8	0.1272	0.1285	0.1298	0.032	0.004	0.1418	0.006	0.1478
9	0.1133	0.1144	0.1155	0.026	0.004	0.1275	0.006	0.1335
10	0.1009	0.1019	0.1029	0.026	0.004	0.1149	0.006	0.1209
11	0.0897	0.0907	0.0917	0.020	0.004	0.1037	0.006	0.1097
12	0.0798	0.0808	0.0818	0.020	0.004	0.0938	0.006	0.0998
13	0.0710	0.0720	0.0730	0.016	0.004	0.0850	0.006	0.0910
14	0.0631	0.0641	0.0651	0.016	0.004	0.0771	0.006	0.0831

Table SQ-2 Square (MW 60-A) mm—Dimensions 1—14 AWG—Two Tape Thicknesses

Square AWG Size	Bare Wire Dimensions			Nominal Radii ±25%	Nom. Tape = 0.051mm		Nom. Tape = 0.076mm	
	Minimum	Nominal	Maximum		Minimum Increase	Maximum** Overall	Minimum Increase	Maximum** Overall
0	8.176	8.252	8.329	1.02	0.102	8.633	0.152	8.786
1	7.275	7.348	7.422	1.02	0.102	7.727	0.152	7.879
2	6.477	6.543	6.609	1.02	0.102	6.914	0.152	7.066
3	5.768	5.827	5.885	1.02	0.102	6.190	0.152	6.342
4	5.138	5.189	5.240	1.02	0.102	5.545	0.152	5.697
5	4.575	4.620	4.666	1.02	0.102	4.971	0.152	5.123
6	4.074	4.115	4.155	0.81	0.102	4.460	0.152	4.613
7	3.630	3.665	3.701	0.81	0.102	4.006	0.152	4.158
8	3.231	3.264	3.297	0.81	0.102	3.602	0.152	3.754
9	2.878	2.906	2.934	0.66	0.102	3.239	0.152	3.391
10	2.563	2.588	2.614	0.66	0.102	2.918	0.152	3.071
11	2.278	2.304	2.329	0.51	0.102	2.634	0.152	2.786
12	2.027	2.052	2.078	0.51	0.102	2.383	0.152	2.535
13	1.803	1.829	1.854	0.41	0.102	2.159	0.152	2.311
14	1.603	1.628	1.654	0.41	0.102	1.958	0.152	2.111

** See note on page 190

Copyright National Electrical Manufacturers Association
Provided by IHS under license with NEMA
No reproduction or networking permitted without license from IHS

Not for Resale

AROMATIC POLYAMIDE PAPER COVERED RECTANGULAR AND SQUARE ALUMINUM MAGNET WIRE THERMAL CLASS 220

Table SQ-3 Square (MW 60-A) Inches—Dimensions 1—14 AWG—Three Tape Thicknesses

Square AWG Size	Bare Wire Dimensions			Nominal Radii	Nom. Tape = 0.002"		Nom. Tape = 0.003"	
	Minimum	Nominal	Maximum	±25%	Minimum Increase	Maximum** Overall	Minimum Increase	Maximum** Overall
0	0.3219	0.3249	0.3279	0.040	0.008	0.3439	0.012	0.3519
1	0.2864	0.2893	0.2922	0.040	0.008	0.3082	0.012	0.3162
2	0.2550	0.2576	0.2602	0.040	0.008	0.2762	0.012	0.2842
3	0.2271	0.2294	0.2317	0.040	0.008	0.2477	0.012	0.2557
4	0.2023	0.2043	0.2063	0.040	0.008	0.2223	0.012	0.2303
5	0.1801	0.1819	0.1837	0.040	0.008	0.1997	0.012	0.2077
6	0.1604	0.1620	0.1636	0.032	0.008	0.1796	0.012	0.1876
7	0.1429	0.1443	0.1457	0.032	0.008	0.1617	0.012	0.1697
8	0.1272	0.1285	0.1298	0.032	0.008	0.1458	0.012	0.1538
9	0.1133	0.1144	0.1155	0.026	0.008	0.1315	0.012	0.1395
10	0.1009	0.1019	0.1029	0.026	0.008	0.1189	0.012	0.1269
11	0.0897	0.0907	0.0917	0.020	0.008	0.1077	0.012	0.1157
12	0.0798	0.0808	0.0818	0.020	0.008	0.0978	0.012	0.1058
13	0.0710	0.0720	0.0730	0.016	0.008	0.0890	0.012	0.0970
14	0.0631	0.0641	0.0651	0.016	0.008	0.0811	0.012	0.0891

Table SQ-3 Square (MW 60-A) mm—Dimensions 1—14 AWG—Three Tape Thicknesses

Square AWG Size	Bare Wire Dimensions			Nominal Radii	Nom. Tape = 0.051mm		Nom. Tape = 0.076mm	
	Minimum	Nominal	Maximum	±25%	Minimum Increase	Maximum** Overall	Minimum Increase	Maximum** Overall
0	8.176	8.252	8.329	1.02	0.203	8.735	0.305	8.938
1	7.275	7.348	7.422	1.02	0.203	7.828	0.305	8.031
2	6.477	6.543	6.609	1.02	0.203	7.015	0.305	7.219
3	5.768	5.827	5.885	1.02	0.203	6.292	0.305	6.495
4	5.138	5.189	5.240	1.02	0.203	5.646	0.305	5.850
5	4.575	4.620	4.666	1.02	0.203	5.072	0.305	5.276
6	4.074	4.115	4.155	0.81	0.203	4.562	0.305	4.765
7	3.630	3.665	3.701	0.81	0.203	4.107	0.305	4.310
8	3.231	3.264	3.297	0.81	0.203	3.703	0.305	3.907
9	2.878	2.906	2.934	0.66	0.203	3.340	0.305	3.543
10	2.563	2.588	2.614	0.66	0.203	3.020	0.305	3.223
11	2.278	2.304	2.329	0.51	0.203	2.736	0.305	2.939
12	2.027	2.052	2.078	0.51	0.203	2.484	0.305	2.687
13	1.803	1.829	1.854	0.41	0.203	2.261	0.305	2.464
14	1.603	1.628	1.654	0.41	0.203	2.060	0.305	2.263

** The maximum overall dimensions have been calculated in accordance with the following:

AWG Size	Maximum Increase Due to Two Thickness of Paper		Maximum Increase Due to Three Thickness of Paper	
	Tape Thickness 0.002 inch (0.051 mm)	Tape Thickness 0.003 inch (0.076 mm)	Tape Thickness 0.002 inch (0.051 mm)	Tape Thickness 0.003 in (0.076 mm)
0-14	0.012 inch (0.305 mm)	0.018 inch (0.457 mm)	0.016 inch (0.406 mm)	0.024 inch (0.610 mm)

Note: The increase due to the paper covering for wire having dimensions not shown shall be the same as for the next larger size.

Copyright National Electrical Manufacturers Association
Provided by IHS under license with NEMA
No reproduction or networking permitted without license from IHS

Not for Resale

Copyright National Electrical Manufacturers Association
Provided by IHS under license with NEMA
No reproduction or networking permitted without license from IHS

Not for Resale

MW 60-C (Paper)
AROMATIC POLYAMIDE PAPER COVERED RECTANGULAR AND SQUARE COPPER MAGNET WIRE THERMAL CLASS 220

INSULATING MATERIALS The insulating material shall be an aromatic polyamide paper. The paper covering shall consist of one or more tapes, each wrapped firmly, closely, evenly, and continuosly around the wire in a configuration necessary to provide the specified number of tape layers (thicknesses of paper). The paper covering shall consist of at least two thicknesses of paper with not less than 40-percent overlap. If an adhesive is used, this material shall perform in the applicable insulation system as required in Part 3, para. 3.58.

THERMAL CLASS 220°C as defined in Part 3, para. 3.58.

GENERAL REQUIREMENTS See Part 1.

Properties	Test Procedure, See Part 3, Paragraph	Requirements
DIMENSIONS	3.2.2.2	Rectangular Wire: a. Dimensions and radii—see Table 1-13 b. Thickness and width tolerances—see Table 1-14 c. Increase in thickness due to paper covering—see Table TW (MW 60-C). Square wire: Bare wire dimensions and tolerances, radii and increase in dimensions due to paper covering—see Tables SQ-2 (MW 60-C) for two thicknesses of paper and SQ-3 (MW 60-C) for three thicknesses of paper. The increase in thicknesses for coverings having more than three thicknesses of paper shall be as follows: $\text{Minimum increase in thickness} = 2\left(\text{Number of paper thickness} - 1\right)\left(\text{Nominal tape thickness}\right)$ $\text{Minimum increase in thickness} = 2\left(\text{Number of paper thickness} + 1\right)\left(\text{Nominal tape thickness}\right)$
ELONGATION	3.4	Not less than 32 percent for thicknesses of 0.049 inch (1.25 mm and greater or 30 percent for thicknesses less than 0.049 inch (1.25 mm)
SPRINGBACK	3.7.2	Not greater than 5.5°
DIELECTRIC STRENGTH	3.8.2	Not less than 300 volts/mil (11800 v/mm) of the minimum thickness of the paper covering on one side (one half the minimum increase)
COVERAGE	3.12.2	Covering shall not loosen appreciably nor open sufficiently to expose the bare wire after bending around a mandrel having a diameter 6 times the thickness of the bare wire.

Copyright National Electrical Manufacturers Association
Provided by IHS under license with NEMA
No reproduction or networking permitted without license from IHS

Not for Resale

AROMATIC POLYAMIDE PAPER COVERED RECTANGULAR AND SQUARE COPPER MAGNET WIRE THERMAL CLASS 220

Table TW Rectangular (MW 60-C) Increase in Thickness Due to Aromatic Polyamide Paper Covering

Number of Tapes	Nominal Tape Thickness = 0.002 inches (.051 mm)				Nominal Tape Thickness = 0.003 inches (.076 mm)			
	Minimum		Maximum		Minimum		Maximum	
	inches	mm	inches	mm	inches	mm	inches	mm
2	0.004	0.102	0.012	0.305	0.006	0.152	0.018	0.457
3	0.008	0.203	0.016	0.406	0.012	0.305	0.024	0.610

1 - The increase in width due to the paper covering shall be equal to or less than the increase in thickness.

2 - The maximum increase shall be permitted to be exceeded provided the maximum overall dimensions of the covered wire does not exceed the sum of the maximum thickness or width of the bare wire plus the maximum increase due to the covering.

Table SQ-2 Square (MW 60-C) Inches—Dimensions 1—14 AWG—Two Tape Thicknesses

Square AWG Size	Bare Wire Dimensions			Nominal Radii ±25%	Nom. Tape = 0.002"		Nom. Tape = 0.003"	
	Minimum	Nominal	Maximum		Minimum Increase	Maximum** Overall	Minimum Increase	Maximum** Overall
0	0.3219	0.3249	0.3279	0.040	0.004	0.3399	0.006	0.3459
1	0.2864	0.2893	0.2922	0.040	0.004	0.3042	0.006	0.3102
2	0.2550	0.2576	0.2602	0.040	0.004	0.2722	0.006	0.2782
3	0.2271	0.2294	0.2317	0.040	0.004	0.2437	0.006	0.2497
4	0.2023	0.2043	0.2063	0.040	0.004	0.2183	0.006	0.2243
5	0.1801	0.1819	0.1837	0.040	0.004	0.1957	0.006	0.2017
6	0.1604	0.1620	0.1636	0.032	0.004	0.1756	0.006	0.1816
7	0.1429	0.1443	0.1457	0.032	0.004	0.1577	0.006	0.1637
8	0.1272	0.1285	0.1298	0.032	0.004	0.1418	0.006	0.1478
9	0.1133	0.1144	0.1155	0.026	0.004	0.1275	0.006	0.1335
10	0.1009	0.1019	0.1029	0.026	0.004	0.1149	0.006	0.1209
11	0.0897	0.0907	0.0917	0.020	0.004	0.1037	0.006	0.1097
12	0.0798	0.0808	0.0818	0.020	0.004	0.0938	0.006	0.0998
13	0.0710	0.0720	0.0730	0.016	0.004	0.0850	0.006	0.0910
14	0.0631	0.0641	0.0651	0.016	0.004	0.0771	0.006	0.0831

Table SQ-2 Square (MW 60-C) mm—Dimensions 1—14 AWG—Two Tape Thicknesses

Square AWG Size	Bare Wire Dimensions			Nominal Radii ± 25%	Nom. Tape = 0.051mm		Nom. Tape = 0.076mm	
	Minimum	Nominal	Maximum		Minimum Increase	Maximum** Overall	Minimum Increase	Maximum** Overall
0	8.176	8.252	8.329	1.02	0.102	8.633	0.152	8.786
1	7.275	7.348	7.422	1.02	0.102	7.727	0.152	7.879
2	6.477	6.543	6.609	1.02	0.102	6.914	0.152	7.066
3	5.768	5.827	5.885	1.02	0.102	6.190	0.152	6.342
4	5.138	5.189	5.240	1.02	0.102	5.545	0.152	5.697
5	4.575	4.620	4.666	1.02	0.102	4.971	0.152	5.123
6	4.074	4.115	4.155	0.81	0.102	4.460	0.152	4.613
7	3.630	3.665	3.701	0.81	0.102	4.006	0.152	4.158
8	3.231	3.264	3.297	0.81	0.102	3.602	0.152	3.754
9	2.878	2.906	2.934	0.66	0.102	3.239	0.152	3.391
10	2.563	2.588	2.614	0.66	0.102	2.918	0.152	3.071
11	2.278	2.304	2.329	0.51	0.102	2.634	0.152	2.786
12	2.027	2.052	2.078	0.51	0.102	2.383	0.152	2.535
13	1.803	1.829	1.854	0.41	0.102	2.159	0.152	2.311
14	1.603	1.628	1.654	0.41	0.102	1.958	0.152	2.111

** See note on page 194.

Copyright National Electrical Manufacturers Association
Provided by IHS under license with NEMA
No reproduction or networking permitted without license from IHS

Not for Resale

AROMATIC POLYAMIDE PAPER COVERED RECTANGULAR AND SQUARE COPPER MAGNET WIRE THERMAL CLASS 220

Table SQ-3 Square (MW 60-C) Inches—Dimensions 1—14 AWG—Three Tape Thicknesses

Square AWG Size	Bare Wire Dimensions			Nominal Radii	Nom. Tape = 0.002"		Nom. Tape = 0.003"	
	Minimum	Nominal	Maximum	±25%	Minimum Increase	Maximum** Overall	Minimum Increase	Maximum** Overall
0	0.3219	0.3249	0.3279	0.040	0.008	0.3439	0.012	0.3519
1	0.2864	0.2893	0.2922	0.040	0.008	0.3082	0.012	0.3162
2	0.2550	0.2576	0.2602	0.040	0.008	0.2762	0.012	0.2842
3	0.2271	0.2294	0.2317	0.040	0.008	0.2477	0.012	0.2557
4	0.2023	0.2043	0.2063	0.040	0.008	0.2223	0.012	0.2303
5	0.1801	0.1819	0.1837	0.040	0.008	0.1997	0.012	0.2077
6	0.1604	0.1620	0.1636	0.032	0.008	0.1796	0.012	0.1876
7	0.1429	0.1443	0.1457	0.032	0.008	0.1617	0.012	0.1697
8	0.1272	0.1285	0.1298	0.032	0.008	0.1458	0.012	0.1538
9	0.1133	0.1144	0.1155	0.026	0.008	0.1315	0.012	0.1395
10	0.1009	0.1019	0.1029	0.026	0.008	0.1189	0.012	0.1269
11	0.0897	0.0907	0.0917	0.020	0.008	0.1077	0.012	0.1157
12	0.0798	0.0808	0.0818	0.020	0.008	0.0978	0.012	0.1058
13	0.0710	0.0720	0.0730	0.016	0.008	0.0890	0.012	0.0970
14	0.0631	0.0641	0.0651	0.016	0.008	0.0811	0.012	0.0891

Table SQ-3 Square (MW 60-C) mm—Dimensions 1—14 AWG—Three Tape Thicknesses

Square AWG Size	Bare Wire Dimensions			Nominal Radii	Nom. Tape = 0.051mm		Nom. Tape = 0.076mm	
	Minimum	Nominal	Maximum	±25%	Minimum Increase	Maximum** Overall	Minimum Increase	Maximum** Overall
0	8.176	8.252	8.329	1.02	0.203	8.735	0.305	8.938
1	7.275	7.348	7.422	1.02	0.203	7.828	0.305	8.031
2	6.477	6.543	6.609	1.02	0.203	7.015	0.305	7.219
3	5.768	5.827	5.885	1.02	0.203	6.292	0.305	6.495
4	5.138	5.189	5.240	1.02	0.203	5.646	0.305	5.850
5	4.575	4.620	4.666	1.02	0.203	5.072	0.305	5.276
6	4.074	4.115	4.155	0.81	0.203	4.562	0.305	4.765
7	3.630	3.665	3.701	0.81	0.203	4.107	0.305	4.310
8	3.231	3.264	3.297	0.81	0.203	3.703	0.305	3.907
9	2.878	2.906	2.934	0.66	0.203	3.340	0.305	3.543
10	2.563	2.588	2.614	0.66	0.203	3.020	0.305	3.223
11	2.278	2.304	2.329	0.51	0.203	2.736	0.305	2.939
12	2.027	2.052	2.078	0.51	0.203	2.484	0.305	2.687
13	1.803	1.829	1.854	0.41	0.203	2.261	0.305	2.464
14	1.603	1.628	1.654	0.41	0.203	2.060	0.305	2.263

** The maximum overall dimensions have been calculated in accordance with the following:

AWG Size	Maximum Increase Due to Two Thickness of Paper		Maximum Increase Due to Three Thickness of Paper	
	Tape Thickness 0.002 inch (0.051 mm)	Tape Thickness 0.003 inch (0.076 mm)	Tape Thickness 0.002 inch (0.051 mm)	Tape Thickness 0.003 in (0.076 mm)
0-14	0.012 inch (0.305 mm)	0.018 inch (0.457 mm)	0.016 inch (0.406 mm)	0.024 inch (0.610 mm)

Note: The increase due to the paper covering for wire having dimensions not shown shall be the same as for the next larger size.

Copyright National Electrical Manufacturers Association
Provided by IHS under license with NEMA
No reproduction or networking permitted without license from IHS

Not for Resale

Copyright National Electrical Manufacturers Association
Provided by IHS under license with NEMA
No reproduction or networking permitted without license from IHS

Not for Resale

MW 61-A (Paper)
AROMATIC POLYAMIDE PAPER COVERED ROUND ALUMINUM MAGNET WIRE THERMAL CLASS 220

INSULATING MATERIALS The insulating material shall be an aromatic polyamide paper. The paper covering shall consist of one or more tapes, each wrapped firmly, closely, evenly, and continuosly around the wire in a configuration necessary to provide the specified number of tape layers (thicknesses of paper). The paper covering shall consist of at least two thicknesses of paper with not less than 40-percent overlap. If an adhesive is used, this material shall perform in the applicable insulation system as required in Part 3, para. 3.58.

THERMAL CLASS 220°C as defined in Part 3, para. 3.58.

GENERAL REQUIREMENTS See Part 1.

Properties	Test Procedure See Part 3,Paragraph	Requirements
DIMENSIONS	3.2.1.2	See Tables 2 and 3 (MW 61-A) for wire having two and three thicknesses of paper, respectively. The increase in diameter for coverings having more than three thicknesses of paper shall be as specified below: $\text{Minimum increase in thickness} = 2\left(\text{Number of paper thickness} - 1\right)\left(\text{Nominal tape thickness}\right)$ $\text{Minimum increase in thickness} = 2\left(\text{Number of paper thickness} + 1\right)\left(\text{Nominal tape thickness}\right)$
ADHERENCE AND FLEXIBILITY	3.3.2	Covering shall not open sufficiently to expose the bare wire, nor shall the covering show any tearing
	3.3.3	Covering shall not open sufficiently to expose the bare wire, nor shall it be possible to slide the paper along the wire
ELONGATION	3.4	Not less than 15 percent
DIELECTRIC STRENGTH	3.8.2	Not less than 300 volts/mil (11800 v/mm) of the minimum thickness of the paper covering on one side (one half the minimum increase)
COVERAGE	3.12.1	Covering shall not loosen appreciably nor open sufficiently to expose the bare wire after bending on a 6d mandrel

AWG Size	Elongation Percent (+2, -0)	Mandral Wrap Diameter
8-9	15	5d

Copyright National Electrical Manufacturers Association
Provided by IHS under license with NEMA
No reproduction or networking permitted without license from IHS

Not for Resale

AROMATIC POLYAMIDE PAPER COVERED ROUND ALUMINUM MAGNET WIRE THERMAL CLASS 220

Table 2 Round (MW 61-A) Inches—Dimensions 4/0—9 AWG—Two Tape Thicknesses

AWG	Bare Wire Dimensions			Nom. Tape = 0.002"		Nom. Tape = 0.003"		AWG
				Minimum	Maximum**	Minimum	Maximum**	
Size	Minimum	Nominal	Maximum	Increase	Overall	Increase	Overall	Size
4/0	0.4554	0.4600	0.4646	0.004	0.4766	0.006	0.4826	4/0
3/0	0.4055	0.4096	0.4137	0.004	0.4257	0.006	0.4317	3/0
2/0	0.3612	0.3648	0.3684	0.004	0.3804	0.006	0.3864	2/0
1/0	0.3219	0.3249	0.3279	0.004	0.3401	0.006	0.3461	1/0
1	0.2864	0.2893	0.2922	0.004	0.3042	0.006	0.3102	1
2	0.2550	0.2576	0.2602	0.004	0.2722	0.006	0.2782	2
3	0.2271	0.2294	0.2317	0.004	0.2437	0.006	0.2497	3
4	0.2023	0.2043	0.2063	0.004	0.2173	0.006	0.2233	4
5	0.1801	0.1819	0.1837	0.004	0.1948	0.006	0.2008	5
6	0.1604	0.1620	0.1636	0.004	0.1748	0.006	0.1808	6
7	0.1429	0.1443	0.1457	0.004	0.1570	0.006	0.1630	7
8	0.1272	0.1285	0.1298	0.004	0.1412	0.006	0.1472	8
9	0.1133	0.1144	0.1155	0.004	0.1270	0.006	0.1330	9

Table 2 Round (MW 61-A) mm—Dimensions 4/0—9 AWG—Two Tape Thicknesses

AWG	Bare Wire Dimensions			Nom. Tape = 0.051mm		Nom. Tape = 0.076mm		AWG
				Minimum	Maximum**	Minimum	Maximum**	
Size	Minimum	Nominal	Maximum	Increase	Overall	Increase	Overall	Size
4/0	11.567	11.684	11.801	0.102	12.106	0.152	12.258	4/0
3/0	10.300	10.404	10.508	0.102	10.813	0.152	10.965	3/0
2/0	9.174	9.266	9.357	0.102	9.662	0.152	9.815	2/0
1/0	8.176	8.252	8.329	0.102	8.639	0.152	8.791	1/0
1	7.275	7.348	7.422	0.102	7.727	0.152	7.879	1
2	6.477	6.543	6.609	0.102	6.914	0.152	7.066	2
3	5.768	5.827	5.885	0.102	6.190	0.152	6.342	3
4	5.138	5.189	5.240	0.102	5.519	0.152	5.672	4
5	4.575	4.620	4.666	0.102	4.948	0.152	5.100	5
6	4.074	4.115	4.155	0.102	4.440	0.152	4.592	6
7	3.630	3.665	3.701	0.102	3.988	0.152	4.140	7
8	3.231	3.264	3.297	0.102	3.586	0.152	3.739	8
9	2.878	2.906	2.934	0.102	3.226	0.152	3.378	9

** The maximum overall diameters have been calculated in accordance with the following:

AWG	Maximum Increase Due to Two Thickness of Paper		Maximum Increase Due to Three Thickness of Paper	
	Tape Thickness	Tape Thickness	Tape Thickness	Tape Thickness
Size	0.002 inch (0.051 mm)	0.003 inch (0.076 mm)	0.002 inch (0.051 mm)	0.003 in (0.076 mm)
4/0-9	0.012 inch (0.305 mm)	0.018 inch (0.457 mm)	0.016 inch (0.406 mm)	0.024 inch (0.610 mm)

Note: The increase due to the paper covering for wire having dimensions not shown shall be the same as for the next larger size.

Copyright National Electrical Manufacturers Association
Provided by IHS under license with NEMA
No reproduction or networking permitted without license from IHS

Not for Resale

AROMATIC POLYAMIDE PAPER COVERED ROUND ALUMINUM MAGNET WIRE THERMAL CLASS 220

Table 3 Round (MW 61-A) Inches—Dimensions 4/0-9 AWG—Three Tape Thicknesses

AWG	Bare Wire Dimensions			Nom. Tape = 0.002" Minimum	Nom. Tape = 0.002" Maximum**	Nom. Tape = 0.003" Minimum	Nom. Tape = 0.003" Maximum**	AWG
Size	Minimum	Nominal	Maximum	Increase	Overall	Increase	Overall	Size
4/0	0.4554	0.4600	0.4646	0.008	0.4806	0.012	0.4886	4/0
3/0	0.4055	0.4096	0.4137	0.008	0.4297	0.012	0.4377	3/0
2/0	0.3612	0.3648	0.3684	0.008	0.3844	0.012	0.3924	2/0
1/0	0.3219	0.3249	0.3279	0.008	0.3441	0.012	0.3521	1/0
1	0.2864	0.2893	0.2922	0.008	0.3082	0.012	0.3162	1
2	0.2550	0.2576	0.2602	0.008	0.2762	0.012	0.2842	2
3	0.2271	0.2294	0.2317	0.008	0.2477	0.012	0.2557	3
4	0.2023	0.2043	0.2063	0.008	0.2213	0.012	0.2293	4
5	0.1801	0.1819	0.1837	0.008	0.1988	0.012	0.2068	5
6	0.1604	0.1620	0.1636	0.008	0.1788	0.012	0.1868	6
7	0.1429	0.1443	0.1457	0.008	0.1610	0.012	0.1690	7
8	0.1272	0.1285	0.1298	0.008	0.1452	0.012	0.1532	8
9	0.1133	0.1144	0.1155	0.008	0.1310	0.012	0.1390	9

Table 3 Round (MW 61-A) mm—Dimensions 4/0-9 AWG—Three Tape Thicknesses

AWG	Bare Wire Dimensions			Nom. Tape = 0.051mm Minimum	Nom. Tape = 0.051mm Maximum**	Nom. Tape = 0.076mm Minimum	Nom. Tape = 0.076mm Maximum**	AWG
Size	Minimum	Nominal	Maximum	Increase	Overall	Increase	Overall	Size
4/0	11.567	11.684	11.801	0.203	12.207	0.305	12.410	4/0
3/0	10.300	10.404	10.508	0.203	10.914	0.305	11.118	3/0
2/0	9.174	9.266	9.357	0.203	9.764	0.305	9.967	2/0
1/0	8.176	8.252	8.329	0.203	8.740	0.305	8.943	1/0
1	7.275	7.348	7.422	0.203	7.828	0.305	8.031	1
2	6.477	6.543	6.609	0.203	7.015	0.305	7.219	2
3	5.768	5.827	5.885	0.203	6.292	0.305	6.495	3
4	5.138	5.189	5.240	0.203	5.621	0.305	5.824	4
5	4.575	4.620	4.666	0.203	5.050	0.305	5.253	5
6	4.074	4.115	4.155	0.203	4.542	0.305	4.745	6
7	3.630	3.665	3.701	0.203	4.089	0.305	4.293	7
8	3.231	3.264	3.297	0.203	3.688	0.305	3.891	8
9	2.878	2.906	2.934	0.203	3.327	0.305	3.531	9

** The maximum overall dimensions have been calculated in accordance with the following:

AWG	Maximum Increase Due to Two Thickness of Paper: Tape Thickness	Tape Thickness	Maximum Increase Due to Three Thickness of Paper: Tape Thickness	Tape Thickness
Size	0.002 inch (0.051 mm)	0.003 inch (0.076 mm)	0.002 inch (0.051 mm)	0.003 in (0.076 mm)
4/0-9	0.012 inch (0.305 mm)	0.018 inch (0.457 mm)	0.016 inch (0.406 mm)	0.024 inch (0.610 mm)

Note: The increase due to the paper covering for wire having dimensions not shown shall be the same as for the next larger size.

Copyright National Electrical Manufacturers Association
Provided by IHS under license with NEMA
No reproduction or networking permitted without license from IHS

Not for Resale

Copyright National Electrical Manufacturers Association
Provided by IHS under license with NEMA
No reproduction or networking permitted without license from IHS

Not for Resale

MW 61-C (Paper)
AROMATIC POLYAMIDE PAPER COVERED ROUND COPPER MAGNET WIRE THERMAL CLASS 220

INSULATING MATERIALS The insulating material shall be an aromatic polyamide paper. The paper covering shall consist of one or more tapes, each wrapped firmly, closely, evenly, and continuosly around the wire in a configuration necessary to provide the specified number of tape layers (thicknesses of paper). The paper covering shall consist of at least two thicknesses of paper with not less than 40-percent overlap. If an adhesive is used, this material shall perform in the applicable insulation system as required in Part 3, para. 3.58.

THERMAL CLASS 220°C as defined in Part 3, 3.58.

GENERAL REQUIREMENTS See Part 1.

Properties	Test Procedure, See Part 3, Paragraph	Requirements
DIMENSIONS	3.2.1.2	See Tables 2 and 3 (MW 61-C) for wire having two and three thicknesses of paper, respectively. The increase in diameter for coverings having more than three thicknesses of paper shall be as specified below: $\text{Minimum increase in thickness} = 2\left(\text{Number of paper thickness} - 1\right)\left(\text{Nominal tape thickness}\right)$ $\text{Minimum increase in thickness} = 2\left(\text{Number of paper thickness} + 1\right)\left(\text{Nominal tape thickness}\right)$
ADHERENCE AND FLEXIBILITY	3.3.2	Covering shall not open sufficiently to expose the bare wire, nor shall the covering show any tearing.
	3.3.3	Covering shall not open sufficiently top expose the bare wire, nor shall it be possible to slide the paper along the wire.
ELONGATION	3.4	Not less than the following:
SPRINGBACK	3.7.2	Not greater than 5.5°
DIELECTRIC STRENGTH	3.8.2	Not less than 300 volts/mil (11800 v/mm) of the minimum thickness of the paper covering on one side (one half the minimum increase)
COVERAGE	3.12.1	Covering shall not loosen appreciably nor open sufficiently to expose the bare wire after bending on a 6d mandrel.

AWG Size	Elongation Percent (+2, -0)	Mandral Wrap Diameter
8-9	15	5d

AWG Size	Minimum Elongation Percent
4/0-0	35
1-9	30

Copyright National Electrical Manufacturers Association
Provided by IHS under license with NEMA
No reproduction or networking permitted without license from IHS
Not for Resale

AROMATIC POLYAMIDE PAPER COVERED ROUND COPPER MAGNET WIRE THERMAL CLASS 220

Table 2 Round (MW 61-C) Inches—Dimensions 4/0—9 AWG—Two Tape Thicknesses

AWG	Bare Wire Dimensions			Nom. Tape = 0.002"		Nom. Tape = 0.003"		AWG
				Minimum	Maximum**	Minimum	Maximum**	
Size	Minimum	Nominal	Maximum	Increase	Overall	Increase	Overall	Size
4/0	0.4554	0.4600	0.4646	0.004	0.4766	0.006	0.4826	4/0
3/0	0.4055	0.4096	0.4137	0.004	0.4257	0.006	0.4317	3/0
2/0	0.3612	0.3648	0.3684	0.004	0.3804	0.006	0.3864	2/0
1/0	0.3219	0.3249	0.3279	0.004	0.3401	0.006	0.3461	1/0
1	0.2864	0.2893	0.2922	0.004	0.3042	0.006	0.3102	1
2	0.2550	0.2576	0.2602	0.004	0.2722	0.006	0.2782	2
3	0.2271	0.2294	0.2317	0.004	0.2437	0.006	0.2497	3
4	0.2023	0.2043	0.2063	0.004	0.2173	0.006	0.2233	4
5	0.1801	0.1819	0.1837	0.004	0.1948	0.006	0.2008	5
6	0.1604	0.1620	0.1636	0.004	0.1748	0.006	0.1808	6
7	0.1429	0.1443	0.1457	0.004	0.1570	0.006	0.1630	7
8	0.1272	0.1285	0.1298	0.004	0.1412	0.006	0.1472	8
9	0.1133	0.1144	0.1155	0.004	0.1270	0.006	0.1330	9

Table 2 Round (MW 61-C) mm—Dimensions 4/0—9 AWG —Two Tape Thicknesses

AWG	Bare Wire Dimensions			Nom. Tape = 0.051mm		Nom. Tape = 0.076mm		AWG
				Minimum	Maximum**	Minimum	Maximum**	
Size	Minimum	Nominal	Maximum	Increase	Overall	Increase	Overall	Size
4/0	11.567	11.684	11.801	0.102	12.106	0.152	12.258	4/0
3/0	10.300	10.404	10.508	0.102	10.813	0.152	10.965	3/0
2/0	9.174	9.266	9.357	0.102	9.662	0.152	9.815	2/0
1/0	8.176	8.252	8.329	0.102	8.639	0.152	8.791	1/0
1	7.275	7.348	7.422	0.102	7.727	0.152	7.879	1
2	6.477	6.543	6.609	0.102	6.914	0.152	7.066	2
3	5.768	5.827	5.885	0.102	6.190	0.152	6.342	3
4	5.138	5.189	5.240	0.102	5.519	0.152	5.672	4
5	4.575	4.620	4.666	0.102	4.948	0.152	5.100	5
6	4.074	4.115	4.155	0.102	4.440	0.152	4.592	6
7	3.630	3.665	3.701	0.102	3.988	0.152	4.140	7
8	3.231	3.264	3.297	0.102	3.586	0.152	3.739	8
9	2.878	2.906	2.934	0.102	3.226	0.152	3.378	9

** The maximum overall diameters have been calculated in accordance with the following:

AWG	Maximum Increase Due to Two Thickness of Paper		Maximum Increase Due to Three Thickness of Paper	
	Tape Thickness	Tape Thickness	Tape Thickness	Tape Thickness
Size	0.002 inch (0.051 mm)	0.003 inch (0.076 mm)	0.002 inch (0.051 mm)	0.003 in (0.076 mm)
4/0-9	0.012 inch (0.305 mm)	0.018 inch (0.457 mm)	0.016 inch (0.406 mm)	0.024 inch (0.610 mm)

Note: The increase due to the paper covering for wire having dimensions not shown shall be the same as for the next larger size.

Copyright National Electrical Manufacturers Association
Provided by IHS under license with NEMA
No reproduction or networking permitted without license from IHS

Not for Resale

AROMATIC POLYAMIDE PAPER COVERED ROUND COPPER MAGNET WIRE THERMAL CLASS 220

Table 3 Round (MW 61-C) Inches—Dimensions 4/0-9 AWG—Three Tape Thicknesses

AWG Size	Bare Wire Dimensions			Nom. Tape = 0.002"		Nom. Tape= 0.003"		AWG Size
	Minimum	Nominal	Maximum	Minimum Increase	Maximum** Overall	Minimum Increase	Maximum** Overall	
4/0	0.4554	0.4600	0.4646	0.008	0.4806	0.012	0.4886	4/0
3/0	0.4055	0.4096	0.4137	0.008	0.4297	0.012	0.4377	3/0
2/0	0.3612	0.3648	0.3684	0.008	0.3844	0.012	0.3924	2/0
1/0	0.3219	0.3249	0.3279	0.008	0.3441	0.012	0.3521	1/0
1	0.2864	0.2893	0.2922	0.008	0.3082	0.012	0.3162	1
2	0.2550	0.2576	0.2602	0.008	0.2762	0.012	0.2842	2
3	0.2271	0.2294	0.2317	0.008	0.2477	0.012	0.2557	3
4	0.2023	0.2043	0.2063	0.008	0.2213	0.012	0.2293	4
5	0.1801	0.1819	0.1837	0.008	0.1988	0.012	0.2068	5
6	0.1604	0.1620	0.1636	0.008	0.1788	0.012	0.1868	6
7	0.1429	0.1443	0.1457	0.008	0.1610	0.012	0.1690	7
8	0.1272	0.1285	0.1298	0.008	0.1452	0.012	0.1532	8
9	0.1133	0.1144	0.1155	0.008	0.1310	0.012	0.1390	9

Table 3 Round (MW 61-C) mm—Dimensions 4/0-9 AWG—Three Tape Thicknesses

AWG Size	Bare Wire Dimensions			Nom. Tape = 0.051mm		Nom. Tape = 0.076mm		AWG Size
	Minimum	Nominal	Maximum	Minimum Increase	Maximum** Overall	Minimum Increase	Maximum** Overall	
4/0	11.567	11.684	11.801	0.203	12.207	0.305	12.410	4/0
3/0	10.300	10.404	10.508	0.203	10.914	0.305	11.118	3/0
2/0	9.174	9.266	9.357	0.203	9.764	0.305	9.967	2/0
1/0	8.176	8.252	8.329	0.203	8.740	0.305	8.943	1/0
1	7.275	7.348	7.422	0.203	7.828	0.305	8.031	1
2	6.477	6.543	6.609	0.203	7.015	0.305	7.219	2
3	5.768	5.827	5.885	0.203	6.292	0.305	6.495	3
4	5.138	5.189	5.240	0.203	5.621	0.305	5.824	4
5	4.575	4.620	4.666	0.203	5.050	0.305	5.253	5
6	4.074	4.115	4.155	0.203	4.542	0.305	4.745	6
7	3.630	3.665	3.701	0.203	4.089	0.305	4.293	7
8	3.231	3.264	3.297	0.203	3.688	0.305	3.891	8
9	2.878	2.906	2.934	0.203	3.327	0.305	3.531	9

** The maximum overall dimensions have been calculated in accordance with the following:

AWG Size	Maximum Increase Due to Two Thickness of Paper		Maximum Increase Due to Three Thickness of Paper	
	Tape Thickness 0.002 inch (0.051 mm)	Tape Thickness 0.003 inch (0.076 mm)	Tape Thickness 0.002 inch (0.051 mm)	Tape Thickness 0.003 in (0.076 mm)
4/0-9	0.012 inch (0.305 mm)	0.018 inch (0.457 mm)	0.016 inch (0.406 mm)	0.024 inch (0.610 mm)

Note: The increase due to the paper covering for wire having dimensions not shown shall be the same as for the next larger size.

Copyright National Electrical Manufacturers Association
Provided by IHS under license with NEMA
No reproduction or networking permitted without license from IHS

Not for Resale

Copyright National Electrical Manufacturers Association
Provided by IHS under license with NEMA
No reproduction or networking permitted without license from IHS

Not for Resale

MW 62-C
AROMATIC POLYIMIDE TAPE COVERED RECTANGULAR AND SQUARE COPPER MAGNET WIRE THERMAL CLASS 220

INSULATING MATERIALS: The insulating material shall be aromatic polyimide tape coated one or both sides with an adhesive layer of fluorinated ethylene propylene (FEP). The covering shall be one or two tapes wrapped spirally around the wire. After wrapping, the tape shall be heat sealed.

THERMAL CLASS: The temperature index must meet or exceed 240°C, as defined in Part 3, para. 3.58.

GENERAL REQUIREMENTS: See Part 1; degree of overloapping and number of tapes as agreed upon between purchaser and supplier.

Properties	Test Procedure See Part 3, Paragraph	Requirements
DIMENSIONS	3.2.2.2	Rectangular and Square Wire: a. Dimensions and radii-See Table 1-13 for Rectangular Wire, and Table SQ (MW 62C) for Square Wire. b. Thicknesses and width tolerances-See Table 1-14 for Rectangular Wire, and Table SQ (MW 62C) for Square Wire c. Increase in thickness and width due to tape covering shall be as follows: Minimum Increase = $2(n_1 T_{1min} + n_2 T_{2min})$ Maximum Increase = $2[(n_1+1)T_{1max} + (n_2+1)T_{2max}]$ where: n_1 = the minimum number of tape thicknesses per side* achieved using the specified degree of overlap for tape 1, the tape closest to the conductor. *See 1.5.1 For overlaps of 0 up to but not including 1/2, n_1=1 1/2 up to but not including 2/3, n_1=2 2/3 up to but not including 3/4, n_1=3 T_{1min} = minimum tape thickness including adhesive of tape 1. T_{1max} = maximum tape thickness including adhesive of tape 1. n_2, t_{2min} and T_{2max} = same as above for tape 2 when used
ADHERENCE AND FLEXIBILITY	3.3.6	No loss of adherence between tape to conductor or between layers of tape.
ELONGATION	3.4	not less than 32 percent for thicknesses of 0.049 (1.25 mm) and greater, or 30 percent for thicknesses less than 0.049 inch (1.25 mm).
SPRINGBACK	3.7.2	Not greater than 5.5°
DIELECTRIC STRENGTH	3.8.2	Not less than 1000 V/mil of the minimum thickness of covering on one side (i.e., one half the minimum increase).

Copyright National Electrical Manufacturers Association
Provided by IHS under license with NEMA
No reproduction or networking permitted without license from IHS

Not for Resale

TABLE SQ (MW 62-C)
AROMATIC POLYIMIDE TAPE COVERED RECTANGULAR AND SQUARE COPPER MAGNET WIRE THERMAL CLASS 220

AWG Size	Bare Wire Dimensions							
	Minimum		Nominal		Maximum		Nominal Radii (± 25%)	
	inches	mm	inches	mm	inches	mm	inches	mm
2	.2550	6.477	.2576	6.543	.2602	6.609	0.040	1.02
3	.2271	5.768	.2294	5.827	.2317	5.885	0.040	1.02
4	.2023	5.138	.2043	5.189	.2053*	5.340*	0.040	1.02
5	.1801	4.575	.1819	4.620	.1828*	4.666*	0.040	1.02
6	.1604	4.074	.1620	4.115	.1628*	4.155*	0.032	0.81
7	.1429	3.630	.1443	3.665	.1450*	3.701*	0.032	0.81
8	.1272	3.231	.1285	3.264	.1292*	3.297*	0.032	0.81
9	.1133	2.878	.1144	2.906	.1150*	2.934*	0.026	0.66

* The maximum bare wire diameter shall be permitted to be exceeded; see 1.6.7.1

Copyright National Electrical Manufacturers Association
Provided by IHS under license with NEMA
No reproduction or networking permitted without license from IHS

Not for Resale

MW 63-C
AROMATIC POLYIMIDE TAPE COVERED BARE ROUND COPPER MAGNET WIRE
THERMAL CLASS 220

INSULATING MATERIALS: The insulating material shall be aromatic polyimide tape coated one or both sides with an adhesive layer of fluorinated ethylene propylene (FEP). The covering shall be one or two tapes wrapped spirally around the wire. After wrapping, the tape shall be heat sealed.

THERMAL CLASS: The temperature index must meet or exceed 240°C, as defined in Part 3, para. 3.58.

GENERAL REQUIREMENTS: See Part 1; This standard is based on one or two tapes. The degree of overlapping and tape thickness will be as agreed upon between purchaser and supplier.

Properties	Test Procedure See Part 3, Paragraph	Requirements
DIMENSIONS	3.2.1.3	See Tables 1 and 2 (MW 63-C).
ADHERENCE AND FLEXIBILITY	3.3.4	No loss of adherence between tape to conductor or between layers of tape.
ELONGATION	3.4	Not less than 30 percent
SPRINGBACK	3.7.2	Not greater than 5.5 degrees
DIELECTRIC STRENGTH	3.8.2	Not less than 1000 v/mil of the minimum thickness of covering on one side (i.e., 1/2 the minimum increase)

Copyright National Electrical Manufacturers Association
Provided by IHS under license with NEMA
No reproduction or networking permitted without license from IHS

Not for Resale

TABLE 1 (MW 63-C)
AROMATIC POLYIMIDE TAPE COVERED BARE ROUND COPPER MAGNET WIRE
THERMAL CLASS 220
BARE WIRE DIMENSIONS

AWG Size	Bare Wire Diameter†					
	Minimum		Nominal		Maximum	
	inches	mm	inches	mm	inches	mm
1	.2864	7.275	.2893	7.348	.2922	7.422
2	.2550	6.477	.2576	6.543	.2602	6.609
3	.2271	5.768	.2294	5.827	.2317	5.885
4	.2023	5.138	.2043	5.189	.2053*	5.340*
5	.1801	4.575	.1819	4.620	.1828*	4.666*
6	.1604	4.074	.1620	4.115	.1628*	4.155*
7	.1429	3.630	.1443	3.665	.1450*	3.701*
8	.1272	3.231	.1285	3.264	.1292*	3.297*
9	.1133	2.878	.1144	2.906	.1150*	2.934*
10	.1009	2.563	.1019	2.588	.1024*	2.614*
11	.0898	2.281	.0907	2.304	.0912*	2.329*
12	.0800	2.032	.0808	2.052	.0812*	2.078*
13	.0713	1.811	.0720	1.829	.0724*	1.854*
14	.0635	1.613	.0641	1.628	.0644*	1.654*

* This maximum bare wire diameter shall be permitted to be exceeded; see 1.6.7.1

TABLE 2 (MW 63-C)
INSULATED WIRE DIMENSIONS

(Based on .0015 inch, ±10% thick tape; .0010 inch tape thickness, with .0005 inch adhesive one side)

One Tape								Two Tapes							
Min. Add'l Increase, Overlap				Max. Add'l Increase, Overlap				Min. Add'l Increase, Overlap				Max. Add'l Increase, Overlap			
0 up to 1/2		1/2 up to 2/3		0 up to 1/2		1/2 up to 2/3		0 up to 1/2		1/2 up to 2/3		0 up to 1/2		1/2 up to 2/3	
inch	mm	inch	mm	inch	mm	inch	mm	inch	mm	inch	mm	inch	mm	inch	mm
.0026	.066	.0052	.132	.0064	0.16	.0096	0.24	.0052	.132	.0104	.264	.0128	0.33	.0192	0.49

Notes:

1. Max. OD = maximum bare wire diameter + maximum addition.
2. When other constructions are used, the increase in dimensions due to the tape covering shall be as follows:

Minimum increase = $2\ (n_1T_{1min} + n_2T_{2min})$
Maximum increase = $2[(n_1 + 1)T_{1max} + (n_2+1)T_{2max}]$

Where:

n_1 = the minimum number of tape thicknesses per side, achieved using the specified degree of overlap for tape 1, the tape closest to the conductor (See 1.5.1).

For overlaps of 0 up to 1/2, n=1
For overlaps of 1/2 up to 2/3, n=2

T_{1min} = min. tape thickness including adhesive of tape 1.
T_{1max} = max. tape thickness including adhesive of tape 1.
n_2, T_{2min} and T_{2max} = same as above for tape 2 when used.

Copyright National Electrical Manufacturers Association
Provided by IHS under license with NEMA
No reproduction or networking permitted without license from IHS

Not for Resale

MW 71-C (Heavy)
POLYIMIDE, HEAVY FILM INSULATED ROUND COPPER MAGNET WIRE FOR HERMETIC APPLICATIONS THERMAL CLASS 220

INSULATING MATERIALS The coating is based on polyimide resins (1.4.2).

THERMAL CLASS 220°C when tested in accordance with Part 1, para. 1.8 and Part 3, para. 3.58.1.

GENERAL REQUIREMENTS See Part 1 and note below.

Properties	Test Procedure, See Part 3, Paragraph	Requirements
DIMENSIONS	3.2.1.1	See Table H (MW 71-C)
ADHERENCE AND FLEXIBILITY	3.3.1	No cracks visible in the film coating
ELONGATION	3.4	Not less than value in Table H (MW 71-C)
HEAT SHOCK	3.5	No cracks visible in the film coating after conditioning at 240°C
SPRINGBACK	3.7.1	Not greater than value in Table H (MW 71-C)
DIELECTRIC STRENGTH	3.8.3	Not less than value in Table H (MW 71-C)
CONTINUITY	3.9.2	The number of discontinuities shall not exceed 5
COMPLETENESS OF CURE	3.10.2	Dissipation factor not greater than 0.6 percent
PERIODIC CONFORMANCE TESTS		
THERMOPLASTIC FLOW	3.50	Median not less than 400°C with heavy film insulated 18 AWG
SOLUBILITY	3.51	Two specimens of heavy film insulated 18 AWG immersed in xylene and 50/50 xylene/butyl Cellosolve shall not soften sufficiently to expose the bare conductor
DIELECTRIC STRENGTH AT RATED TEMPERATURE	3.52	Heavy film insulated wire shall average not less than 4275 volts for 18 AWG
REFRIGERANT 22 EXTRACTION	3.55	Not greater than 0.25 percent of the weight of the film insulation
RETAINED DIELECTRIC AFTER R-22 CONDITIONING	3.56	Average not less than 5700 volts with heavy film insulated 18 AWG
SCRAPE RESISTANCE	3.59	Lowest "grams-to-fail" load for any one of the three tests and the average of the three tests shall not be less than the values in Table H (MW 71-C)

NOTE—MW 71-C (Heavy) is now equivalent to MW 16-C (Heavy). This specification will be dropped on or about June 1, 1999.

Copyright National Electrical Manufacturers Association
Provided by IHS under license with NEMA
No reproduction or networking permitted without license from IHS

Not for Resale

Table H (MW 71-C)
POLYIMIDE, HEAVY FILM INSULATED ROUND COPPER MAGNET WIRE FOR HERMETIC APPLICATIONS THERMAL CLASS 220

AWG Size	Bare Wire Diameter, Inches †			Insulation †		Elongation, Minimum Percent	Scrape, Grams to Fail		Springback, Maximum Degrees per Turn	Dielectric Strength, Minimum Breakdown Volts	AWG Size
	Minimum	Nominal	Maximum	Minimum Increase in Diameter, Inches	Maximum Overall Diameter, Inches		Average	Minimum			
14	0.0635	0.0641	0.0644*	0.0032	0.0682	33	1090	925	42	6325	14
15	0.0565	0.0571	0.0574*	0.0030	0.0609	33	1015	865	46	6175	15
16	0.0503	0.0508	0.0511*	0.0029	0.0545	33	955	810	50	6000	16
17	0.0448	0.0453	0.0455*	0.0028	0.0488	32	890	755	54	5850	17
18	0.0399	0.0403	0.0405*	0.0026	0.0437	32	835	710	58	5700	18
19	0.0355	0.0359	0.0361*	0.0025	0.0391	31	785	665	62	5500	19
20	0.0317	0.0320	0.0322*	0.0023	0.0351	30	740	630	66	5400	20
21	0.0282	0.0285	0.0286*	0.0022	0.0314	30	695	595	53	5250	21
22	0.0250	0.0253	0.0254*	0.0021	0.0281	29	650	550	58	5125	22
23	0.0224	0.0226	0.0227*	0.0020	0.0253	29	605	515	62	5000	23
24	0.0199	0.0201	0.0202*	0.0019	0.0227	28	565	485	67	4850	24
25	0.0177	0.0179	0.0180*	0.0018	0.0203	28	530	450	72	4725	25
26	0.0157	0.0159	0.0160*	0.0017	0.0182	27	495	425	76	4600	26
27	0.0141	0.0142	0.0143	0.0016	0.0164	27	460	395	50	4500	27
28	0.0125	0.0126	0.0127	0.0016	0.0147	26	435	370	55	4375	28
29	0.0112	0.0113	0.0114	0.0015	0.0133	26	405	340	61	4250	29
30	0.0099	0.0100	0.0101	0.0014	0.0119	25	380	325	66	4150	30

* This maximum bare wire diameter shall be permitted to be exceeded, see 1.6.7.2.
† For metric equivalent, see Table 1-2.

Copyright National Electrical Manufacturers Association
Provided by IHS under license with NEMA
No reproduction or networking permitted without license from IHS

Not for Resale

MW 72-C (Heavy)
POLYESTER (AMIDE) (IMIDE), HEAVY FILM INSULATED ROUND COPPER MAGNET WIRE FOR HERMETIC APPLICATIONS THERMAL CLASS 180

INSULATING MATERIALS The coating is based on polyester (amide) (imide) resins (1.4.2).

THERMAL CLASS 180°C when tested in accordance with Part 1, para. 1.8 and Part 3, para. 3.58.1.

GENERAL REQUIREMENTS See Part 1.

Properties	Test Procedure, See Part 3, Paragraph	Requirements
DIMENSIONS	3.2.1.1	See Table H (MW 72-C)
ADHERENCE AND FLEXIBILITY	3.3.1	No cracks visible in the film coating
ELONGATION	3.4	Not less than value in Table H (MW 72-C)
HEAT SHOCK	3.5	No cracks visible in the film coating after conditioning at 200°C
SPRINGBACK	3.7.1	Not greater than value in Table H (MW 72-C)
DIELECTRIC STRENGTH	3.8.3	Not less than value in Table H (MW 72-C)
CONTINUITY	3.9.2	The number of discontinuities shall not exceed 5
PERIODIC CONFORMANCE TESTS		
THERMOPLASTIC FLOW	3.50	Median not less than 300°C with heavy film insulated 18 AWG
SOLUBILITY	3.51	Two specimens of heavy film insulated 18 AWG immersed in xylene and 50/50 xylene/butyl Cellosolve shall not soften sufficiently to expose the bare conductor
DIELECTRIC STRENGTH AT RATED TEMPERATURE	3.52	Heavy film insulated wire shall average not less than 4275 volts for 18 AWG
REFRIGERANT 22 EXTRACTION	3.55	Not greater than 0.25 percent of the weight of the film insulation
RETAINED DIELECTRIC AFTER R-22 CONDITIONING	3.56	Average not less than 5700 volts with heavy film insulated 18 AWG
SCRAPE RESISTANCE	3.59	Lowest "grams-to-fail" load for any one of the three tests and the average of the three tests shall not be less than the values in Table H (MW 72-C)

Copyright National Electrical Manufacturers Association
Provided by IHS under license with NEMA
No reproduction or networking permitted without license from IHS

Not for Resale

Table H (MW 72-C)
POLYESTER (AMIDE)(IMIDE), HEAVY FILM INSULATED ROUND COPPER MAGNET WIRE FOR HERMETIC APPLICATIONS THERMAL CLASS 180

AWG Size	Bare Wire Diameter, Inches †			Insulation †		Elongation, Minimum Percent	Scrape, Grams to Fail		Springback, Maximum Degrees per Turn	Dielectric Strength, Minimum Breakdown Volts	AWG Size
	Minimum	Nominal	Maximum	Minimum Increase in Diameter, Inches	Maximum Overall Diameter, Inches		Average	Minimum			
14	0.0635	0.0641	0.0644*	0.0032	0.0682	33	1490	1270	42	6325	14
15	0.0565	0.0571	0.0574*	0.0030	0.0609	33	1400	1190	46	6175	15
16	0.0503	0.0508	0.0511*	0.0029	0.0545	33	1310	1115	50	6000	16
17	0.0448	0.0453	0.0455*	0.0028	0.0488	32	1230	1045	54	5850	17
18	0.0399	0.0403	0.0405*	0.0026	0.0437	32	1150	980	58	5700	18
19	0.0355	0.0359	0.0361*	0.0025	0.0391	31	1070	910	62	5500	19
20	0.0317	0.0320	0.0322*	0.0023	0.0351	30	1000	850	66	5400	20
21	0.0282	0.0285	0.0286*	0.0022	0.0314	30	940	800	53	5250	21
22	0.0250	0.0253	0.0254*	0.0021	0.0281	29	880	750	58	5125	22
23	0.0224	0.0226	0.0227*	0.0020	0.0253	29	820	700	62	5000	23
24	0.0199	0.0201	0.0202*	0.0019	0.0227	28	770	655	67	4850	24
25	0.0177	0.0179	0.0180*	0.0018	0.0203	28	720	615	72	4725	25
26	0.0157	0.0159	0.0160*	0.0017	0.0182	27	675	575	76	4600	26
27	0.0141	0.0142	0.0143	0.0016	0.0164	27	635	540	50	4500	27
28	0.0125	0.0126	0.0127	0.0016	0.0147	26	595	510	55	4375	28
29	0.0112	0.0113	0.0114	0.0015	0.0133	26	560	480	61	4250	29
30	0.0099	0.0100	0.0101	0.0014	0.0119	25	525	450	66	4150	30

* This maximum bare wire diameter shall be permitted to be exceeded; see 1.6.7.2.
† For metric equivalent, see Table 1-2.

Copyright National Electrical Manufacturers Association
Provided by IHS under license with NEMA
No reproduction or networking permitted without license from IHS

Not for Resale

MW 73-A (Heavy)
POLYESTER (AMIDE) (IMIDE) OVERCOATED WITH POLYAMIDEIMIDE, HEAVY FILM INSULATED ROUND ALUMINUM MAGNET WIRE FOR HERMETIC APPLICATIONS
THERMAL CLASS 220

INSULATING MATERIALS The conductor shall be coated with a dual film. The underlying coating is based on polyester (amide)(imide) resins (1.4.2). The superimposed coating is based on polyamideimide resins (1.4.2).

THERMAL CLASS 220°C when tested in accordance with Part 1, para. 1.8 and Part 3, para. 3.58.1.

GENERAL REQUIREMENTS See Part 1.

Properties	Test Procedure, See Part 3, Paragraph	Requirements
DIMENSIONS	3.2.1.1	See Table H (MW 73-A)
ADHERENCE AND FLEXIBILITY	3.3.1	No cracks visible in the film coating
ELONGATION	3.4	Not less than value in Table H (MW 73-A)
HEAT SHOCK	3.5	No cracks visible in the film coating after conditioning at 240°C
DIELECTRIC STRENGTH	3.8.3	Not less than value in Table H (MW 73-A)
CONTINUITY	3.9.2	14-28 AWG—the number of discontinuities shall not exceed 10
PERIODIC CONFORMANCE TESTS		
THERMOPLASTIC FLOW	3.50	Median not less than 300°C with heavy film insulated 18 AWG
SOLUBILITY	3.51	Two specimens of heavy film insulated 18 AWG immersed in xylene and 50/50 xylene/butyl Cellosolve shall not soften sufficiently to expose the bare conductor
DIELECTRIC STRENGTH AT RATED TEMPERATURE	3.52	Heavy film insulated wire shall average not less than 4275 volts for 18 AWG
REFRIGERANT 22 EXTRACTION	3.55	Not greater than 0.25 percent of the weight of the film coating
RETAINED DIELECTRIC AFTER R-22 CONDITIONING	3.56	Average not less than 5700 volts with heavy film insulated 18 AWG
SCRAPE RESISTANCE	3.59	Lowest "grams-to-fail" load for any one of the three tests and the average of the three tests shall not be less than the values in Table H (MW 73-A)

Copyright National Electrical Manufacturers Association
Provided by IHS under license with NEMA
No reproduction or networking permitted without license from IHS

Not for Resale

Table H (MW 73-A)
POLYESTER (AMIDE) (IMIDE) OVERCOATED WITH POLYAMIDEIMIDE, HEAVY FILM INSULATED ROUND ALUMINUM MAGNET WIRE FOR HERMETIC APPLICATIONS THERMAL CLASS 220

AWG Size	Bare Wire Diamter, Inches †			Insulation †		Elongation, Minimum	Scrape, Grams to Fail		Dielectric Strength, Minimum Breakdown,	AWG Size
	Minimum	Nominal	Maximum	Minimum Increase in Diameter, Inches	Maximum Overall Diameter, Inches	Percent	Average	Minimum	Volts	
12	0.0800	0.0808	0.0812*	0.0029	0.0847	15	895	760	5800	12
13	0.0713	0.0720	0.0724*	0.0028	0.0757	15	895	760	5600	13
14	0.0635	0.0641	0.0644*	0.0032	0.0682	15	895	760	6325	14
15	0.0565	0.0571	0.0574*	0.0030	0.0609	15	840	715	6175	15
16	0.0503	0.0508	0.0511*	0.0029	0.0545	15	785	670	6000	16
17	0.0448	0.0453	0.0455*	0.0028	0.0488	15	740	625	5850	17
18	0.0399	0.0403	0.0405*	0.0026	0.0437	15	690	590	5700	18
19	0.0355	0.0359	0.0361*	0.0025	0.0391	15	640	545	5550	19
20	0.0317	0.0320	0.0322*	0.0023	0.0351	14	600	510	5400	20
21	0.0282	0.0285	0.0286*	0.0022	0.0314	14	565	480	5250	21
22	0.0250	0.0253	0.0254*	0.0021	0.0281	14	530	450	5125	22
23	0.0224	0.0226	0.0227*	0.0020	0.0253	14	490	420	5000	23
24	0.0199	0.0201	0.0202*	0.0019	0.0227	13	460	395	4850	24
25	0.0177	0.0179	0.0180*	0.0018	0.0203	13	440	380	4725	25
26	0.0157	0.0159	0.0160*	0.0017	0.0182	13	420	365	4600	26
27	0.0141	0.0142	0.0143*	0.0016	0.0164	13	405	355	4500	27
28	0.0125	0.0126	0.0127*	0.0016	0.0147	12	395	350	4375	28

*This maximum bare wire diameter shall be permitted to be exceeded; see 1.6.7.2.
† For metric equivalent, see Table 1-2.

Copyright National Electrical Manufacturers Association
Provided by IHS under license with NEMA
No reproduction or networking permitted without license from IHS

Not for Resale

MW 73-C (Heavy)
POLYESTER (AMIDE) (IMIDE) OVERCOATED WITH POLYAMIDEIMIDE, HEAVY FILM INSULATED ROUND COPPER MAGNET WIRE FOR HERMETIC APPLICATIONS
THERMAL CLASS 200

INSULATING MATERIALS The conductor shall be coated with a dual film. The underlying coating is based on polyester (amide)(imide) resins (1.4.2). The superimposed insulation is based on polyamideimide resins (1.4.2).

THERMAL CLASS 200°C when tested in accordance with Part 1, para. 1.8 and Part 3, para. 3.58.1.

GENERAL REQUIREMENTS See Part 1.

Properties	Test Procedure, See Part 3, Paragraph	Requirements
DIMENSIONS	3.2.1.1	See Table H (MW 73-C)
ADHERENCE AND FLEXIBILITY	3.3.1	No cracks visible in the film coating
ELONGATION	3.4	Not less than value in Table H (MW 73-C)
HEAT SHOCK	3.5	No cracks visible in the film coating after conditioning at 220°C
SPRINGBACK	3.7.1	Not greater than value in Table H (MW 73-C)
DIELECTRIC STRENGTH	3.8.3	Not less than value in Table H (MW 73-C)
CONTINUITY	3.9.2	The number of discontinuities shall not exceed 5
PERIODIC CONFORMANCE TESTS		
THERMOPLASTIC FLOW	3.50	Median not less than 300°C with heavy film insulated 18 AWG
SOLUBILITY	3.51	Two specimens of heavy film insulated 18 AWG immersed in xylene and 50/50 xylene/butyl Cellosolve shall not soften sufficiently to expose the bare conductor
DIELECTRIC STRENGTH AT RATED TEMPERATURE	3.52	Heavy film insulated wire shall average not less than 4275 volts for 18 AWG
REFRIGERANT 22 EXTRACTION	3.55	Not greater than 0.25 percent of the weight of the film insulation
RETAINED DIELECTRIC AFTER R-22 CONDITIONING	3.56	Average not less than 5700 volts with heavy film insulated 18 AWG
SCRAPE RESISTANCE	3.59	Lowest "grams-to-fail" load for any one of the three tests and the average of the three tests shall not be less than the values in Table H (MW 73-C)

Copyright National Electrical Manufacturers Association
Provided by IHS under license with NEMA
No reproduction or networking permitted without license from IHS

Not for Resale

Table H (MW 73-C)
POLYESTER (AMIDE) (IMIDE) OVERCOATED WITH POLYAMIDEIMIDE, HEAVY FILM INSULATED ROUND COPPER MAGNET WIRE FOR HERMETIC APPLICATIONS THERMAL CLASS 200

AWG Size	Bare Wire Diameter, Inches †			Insulation †		Elongation, Minimum	Scrape, Grams to Fail		Springback, Maximum Degrees	Dielectric Strength, Minimum Breakdown	AWG Size
	Minimum	Nominal	Maximum	Minimum Increase in Diameter, Inches	Maximum Overall Diameter, Inches	Percent	Average	Minimum	per Turn	Volts	
14	0.0635	0.0641	0.0644*	0.0032	0.0682	33	1490	1270	42	6325	14
15	0.0565	0.0571	0.0574*	0.0030	0.0609	33	1400	1190	46	6175	15
16	0.0503	0.0508	0.0511*	0.0029	0.0545	33	1310	1115	50	6000	16
17	0.0448	0.0453	0.0455*	0.0028	0.0488	32	1230	1045	54	5850	17
18	0.0399	0.0403	0.0405*	0.0026	0.0437	32	1150	980	58	5700	18
19	0.0355	0.0359	0.0361*	0.0025	0.0391	31	1070	910	62	5550	19
20	0.0317	0.0320	0.0322*	0.0023	0.0351	30	1000	850	66	5400	20
21	0.0282	0.0285	0.0286*	0.0022	0.0314	30	940	800	53	5250	21
22	0.0250	0.0253	0.0254*	0.0021	0.0281	29	880	750	58	5125	22
23	0.0224	0.0226	0.0227*	0.0020	0.0253	29	820	700	62	5000	23
24	0.0199	0.0201	0.0202*	0.0019	0.0227	28	770	655	67	4850	24
25	0.0177	0.0179	0.0180*	0.0018	0.0203	28	720	615	72	4725	25
26	0.0157	0.0159	0.0160*	0.0017	0.0182	27	675	575	76	4800	26
27	0.0141	0.0142	0.0143	0.0016	0.0164	27	635	540	50	4500	27
28	0.0125	0.0126	0.0127	0.0016	0.0147	26	595	510	55	4375	28
29	0.0112	0.0113	0.0114	0.0015	0.0133	26	560	480	61	4250	29
30	0.0099	0.0100	0.0101	0.0014	0.0119	25	525	450	66	4150	30

*This maximum bare wire diameter shall be permitted to be exceeded; see 1.6.7.2.
†For metric equivalent, see Table 1-2.

Copyright National Electrical Manufacturers Association
Provided by IHS under license with NEMA
No reproduction or networking permitted without license from IHS

Not for Resale

MW 74-A (Single)
POLYESTER (AMIDE) (IMIDE), SINGLE FILM INSULATED ROUND ALUMINUM MAGNET WIRE THERMAL CLASS 220

INSULATING MATERIALS The conductor is based on polyester (amide)(imide) resins (1.4.2).

THERMAL CLASS 220°C when tested in accordance with Part 1, para. 1.8 and Part 3, para. 3.58.1.

GENERAL REQUIREMENTS See Part 1.

Properties	Test Procedure, See Part 3, Paragraph	Requirements
DIMENSIONS	3.2.1.1	See Table S (MW 74-A)
ADHERENCE AND FLEXIBILITY	3.3.1	No cracks visible in the film coating
ELONGATION	3.4	Not less than value in Table S (MW 74-A)
HEAT SHOCK	3.5	No cracks visible in the film coating after conditioning at 240°C
DIELECTRIC STRENGTH	3.8.3	Not less than value in Table S (MW 74-A)
CONTINUITY	3.9.2	The number of discontinuities shall not exceed 25
PERIODIC CONFORMANCE TESTS		
THERMOPLASTIC FLOW	3.50	Median not less than 300°C with heavy film insulated 18 AWG
SOLUBILITY	3.51	Two specimens of heavy film insulated 18 AWG immersed in xylene and 50/50 xylene/butyl Cellosolve shall not soften sufficiently to expose the bare conductor
DIELECTRIC STRENGTH AT RATED TEMPERATURE	3.52	Heavy film insulated wire shall average not less than 4275 volts for 18 AWG
SCRAPE RESISTANCE	3.59	Lowest "grams-to-fail" load for any one of the three tests and the average of the three tests shall not be less than the values in Table S (MW 74-A)

Copyright National Electrical Manufacturers Association
Provided by IHS under license with NEMA
No reproduction or networking permitted without license from IHS

Not for Resale

Table S (MW 74-A)
POLYESTER (AMIDE) (IMIDE), SINGLE FILM INSULATED ROUND ALUMINUM MAGNET WIRE THERMAL CLASS 220

AWG Size	Bare Wire Diameter, Inches †			Insulation †		Elongation, Minimum	Scrape, Grams to Fail		Dielectric Strength, Minimum Breakdown	AWG Size
	Minimum	Nominal	Maximum	Minimum Increase in Diameter, Inches	Maximum Overall Diameter, Inches	Percent	Average	Minimum	Volts	
14	0.0635	0.0641	0.0644*	0.0016	0.0666	33	840	715	3525	14
15	0.0565	0.0571	0.0574*	0.0015	0.0594	33	780	665	3425	15
16	0.0503	0.0508	0.0511*	0.0014	0.0531	33	735	625	3325	16
17	0.0448	0.0453	0.0455*	0.0014	0.0475	32	690	585	3250	17
18	0.0399	0.0403	0.0405*	0.0013	0.0424	32	645	550	3175	18
19	0.0355	0.0359	0.0361*	0.0012	0.0379	31	600	510	3075	19
20	0.0317	0.0320	0.0322*	0.0012	0.0339	30	560	475	3000	20
21	0.0282	0.0285	0.0286*	0.0011	0.0303	30	525	445	2925	21
22	0.0250	0.0253	0.0254*	0.0011	0.0270	29	490	415	2850	22
23	0.0224	0.0226	0.0227*	0.0010	0.0243	29	460	390	2775	23
24	0.0199	0.0201	0.0202*	0.0010	0.0217	28	430	365	2700	24

*This maximum bare wire diameter shall be permitted to be exceeded; see 1.6.7.2.
† For metric equivalent, see Table 1-1.

Copyright National Electrical Manufacturers Association
Provided by IHS under license with NEMA
No reproduction or networking permitted without license from IHS

Not for Resale

MW 74-A (Heavy)
POLYESTER (AMIDE) (IMIDE), HEAVY FILM INSULATED ROUND ALUMINUM MAGNET WIRE THERMAL CLASS 220

INSULATING MATERIALS The conductor is based on polyester (amide)(imide) resins (1.4.2).

THERMAL CLASS 220°C when tested in accordance with Part 1, para. 1.8 and Part 3, para. 3.58.1.

GENERAL REQUIREMENTS See Part 1.

Properties	Test Procedure, See Part 3, Paragraph	Requirements
DIMENSIONS	3.2.1.1	See Table H (MW 74-A)
ADHERENCE AND FLEXIBILITY	3.3.1	No cracks visible in the film coating
ELONGATION	3.4	Not less than value in Table H (MW 74-A)
HEAT SHOCK	3.5	No cracks visible in the film coating after conditioning at 240°C
DIELECTRIC STRENGTH	3.8.3	Not less than value in Table H (MW 74-A)
CONTINUITY	3.9.2	14-24 AWG—the number of discontinuities shall not exceed 10
PERIODIC CONFORMANCE TESTS		
THERMOPLASTIC FLOW	3.50	Median not less than 300°C with heavy film insulated 18 AWG
SOLUBILITY	3.51	Two specimens of heavy film-insulated 18 AWG immersed in xylene and 50/50 xylene/butyl Cellosolve shall not soften sufficiently to expose the bare conductor
DIELECTRIC STRENGTH AT RATED TEMPERATURE	3.52	Heavy film insulated wire shall average not less than 4275 volts for 18 AWG
SCRAPE RESISTANCE	3.59	Lowest "grams-to-fail" load for any one of the three tests and the average of the three tests shall not be less than the values in Table H (MW 74-A)

Copyright National Electrical Manufacturers Association
Provided by IHS under license with NEMA
No reproduction or networking permitted without license from IHS

Not for Resale

Table H (MW 74-A)
POLYESTER (AMIDE) (IMIDE), HEAVY FILM INSULATED ROUND ALUMINUM MAGNET WIRE
THERMAL CLASS 220

AWG Size	Bare Wire Diameter, Inches †			Insulation †		Elongation, Minimum	Scrape, Grams to Fail		Dielectric Strength, Minimum Breakdown	AWG Size
	Minimum	Nominal	Maximum	Minimum Increase in Diameter, Inches	Maximum Overall Diameter, Inches	Percent	Average	Minimum	Volts	
4	0.2023	0.2043	0.2053*	0.0037	0.2098	15	...	...	3700	4
5	0.1801	0.1819	0.1828*	0.0036	0.1872	15	...	...	3600	5
6	0.1604	0.1620	0.1628*	0.0035	0.1671	15	...	...	3500	6
7	0.1429	0.1443	0.1450*	0.0034	0.1491	15	...	...	3400	7
8	0.1272	0.1285	0.1292*	0.0033	0.1332	15	...	...	6600	8
9	0.1133	0.1144	0.1150*	0.0032	0.1189	15	...	...	6400	9
10	0.1009	0.1019	0.1024*	0.0031	0.1061	15	895	760	6200	10
11	0.0898	0.0907	0.0912*	0.0030	0.0948	15	895	760	6000	11
12	0.0800	0.0808	0.0812*	0.0029	0.0847	15	895	760	5800	12
13	0.0713	0.0720	0.0724*	0.0028	0.0757	15	895	760	5600	13
14	0.0635	0.0641	0.0644*	0.0032	0.0682	15	895	760	6325	14
15	0.0565	0.0571	0.0574*	0.0030	0.0609	15	840	715	6175	15
16	0.0503	0.0508	0.0511*	0.0029	0.0545	15	785	670	6000	16
17	0.0448	0.0453	0.0455*	0.0028	0.0488	15	740	625	5850	17
18	0.0399	0.0403	0.0405*	0.0026	0.0437	15	690	590	5700	18
19	0.0355	0.0359	0.0361*	0.0025	0.0391	15	640	545	5500	19
20	0.0317	0.0320	0.0322*	0.0023	0.0351	14	600	510	5400	20
21	0.0282	0.0285	0.0286*	0.0022	0.0314	14	565	480	5250	21
22	0.0250	0.0253	0.0254*	0.0021	0.0281	14	520	450	5125	22
23	0.0224	0.0226	0.0227*	0.0020	0.0253	14	490	420	5000	23
24	0.0199	0.0201	0.0202*	0.0019	0.0227	13	460	395	4850	24

This maximum bare wire diameter shall be permitted to be exceeded; see 1.6.7.2.
† For metric equivalent, see Table 1-2.

Copyright National Electrical Manufacturers Association
Provided by IHS under license with NEMA
No reproduction or networking permitted without license from IHS

Not for Resale

MW 74-C (Single)
POLYESTER (AMIDE) (IMIDE), SINGLE FILM INSULATED ROUND COPPER MAGNET WIRE THERMAL CLASS 200

INSULATING MATERIALS The coating is based on polyester (amide) (imide) resins (1.4.2).

THERMAL CLASS 200°C when tested in accordance with Part 1, para. 1.8 and Part 3, para. 3.58.1.

GENERAL REQUIREMENTS See Part 1.

Properties	Test Procedure, See Part 3, Paragraph	Requirements
DIMENSIONS	3.2.1.1	See Table S (MW 74-C)
ADHERENCE AND FLEXIBILITY	3.3.1	No cracks visible in the film coating
ELONGATION	3.4	Not less than value in Table S (MW 74-C)
HEAT SHOCK	3.5	No cracks visible in the film coating after conditioning at 220°C
SPRINGBACK	3.7.1	Not greater than value in Table S (MW 74-C)
DIELECTRIC STRENGTH	3.8.3	Not less than value in Table S (MW 74-C)
CONTINUITY	3.9.2 3.9.3	14-44 AWG—the number of discontinuities shall not exceed 15 45-56 AWG— the number of discontinuities shall not exceed 25
PERIODIC CONFORMANCE TESTS		
THERMOPLASTIC FLOW	3.50	Median not less than 300°C with heavy film insulated 18 or 36 AWG
SOLUBILITY	3.51	Two specimens of heavy film insulated 18 or 36 AWG immersed in xylene and 50/50 xylene/butyl Cellosolve shall not soften sufficiently to expose the bare conductor
DIELECTRIC STRENGTH AT RATED TEMPERATURE	3.52	Heavy film insulated wire shall average not less than 4275 volts for 18 AWG or 1900 volts with 36 AWG
SCRAPE RESISTANCE	3.59	Lowest "grams-to-fail" load for any one of the three tests and the average of the three tests shall not be less than the values in Table S (MW 74-C)

Copyright National Electrical Manufacturers Association
Provided by IHS under license with NEMA
No reproduction or networking permitted without license from IHS

Not for Resale

Table S (MW 74-C)
POLYESTER (AMIDE) (IMIDE), SINGLE FILM INSULATED ROUND COPPER MAGNET WIRE THERMAL CLASS 200

AWG Size	Bare Wire Diameter, Inches †			Insulation †		Elongation, Minimum	Scrape, Grams to Fail		Springback, Maximum	Dielectric Strength, Minimum	AWG Size
	Minimum	Normal	Maximum	Minimum Increase in Diameter, Inches	Maximum Overall Diameter, Inches	Percent	Average	Minimum	Degrees per Turn	Breakdown Volts	
14	0.0635	0.0641	0.0644*	0.0016	0.0666	33	840	715	42	3525	14
15	0.0565	0.0571	0.0574*	0.0015	0.0594	33	780	665	46	3425	15
16	0.0503	0.0508	0.0511*	0.0014	0.0531	33	735	625	50	3325	16
17	0.0448	0.0453	0.0455*	0.0014	0.0475	32	690	585	54	3250	17
18	0.0399	0.0403	0.0405*	0.0013	0.0424	32	645	550	58	3175	18
19	0.0355	0.0359	0.0361*	0.0012	0.0379	31	600	510	62	3075	19
20	0.0317	0.0320	0.0322*	0.0012	0.0339	30	560	475	66	3000	20
21	0.0282	0.0285	0.0286*	0.0011	0.0303	30	525	445	53	2925	21
22	0.0250	0.0253	0.0254*	0.0011	0.0270	29	490	415	58	2850	22
23	0.0224	0.0226	0.0227*	0.0010	0.0243	29	460	390	62	2775	23
24	0.0199	0.0201	0.0202*	0.0010	0.0217	28	430	365	67	2700	24
25	0.0177	0.0179	0.0180*	0.0009	0.0194	28	400	340	72	2625	25
26	0.0157	0.0159	0.0160*	0.0009	0.0173	27	380	325	76	2550	26
27	0.0141	0.0142	0.0143	0.0008	0.0156	27	355	300	50	2500	27
28	0.0125	0.0126	0.0127	0.0008	0.0140	26	335	285	55	2425	28
29	0.0112	0.0113	0.0114	0.0007	0.0126	26	310	265	61	2375	29
30	0.0099	0.0100	0.0101	0.0007	0.0112	25	295	250	66	2300	30
31	0.0088	0.0089	0.0090	0.0006	0.0100	24	...	...	...	2075	31
32	0.0079	0.0080	0.0081	0.0006	0.0091	24	...	...	...	1850	32
33	0.0070	0.0071	0.0072	0.0005	0.0081	23	...	...	...	1675	33
34	0.0062	0.0063	0.0064	0.0005	0.0072	22	...	...	...	1500	34
35	0.0055	0.0056	0.0057	0.0004	0.0064	21	...	...	...	1325	35
36	0.0049	0.0050	0.0051	0.0004	0.0058	20	...	...	...	1200	36
37	0.0044	0.0045	0.0046	0.0003	0.0052	20	...	...	...	1075	37
38	0.0039	0.0040	0.0041	0.0003	0.0047	19	...	...	...	950	38
39	0.0034	0.0035	0.0036	0.0002	0.0041	18	...	...	...	850	39
40	0.0030	0.0031	0.0032	0.0002	0.0037	17	...	...	...	775	40
41	0.0027	0.0028	0.0029	0.0002	0.0033	17	...	...	...	700	41
42	0.0024	0.0025	0.0026	0.0002	0.0030	16	...	...	...	625	42
43	0.0021	0.0022	0.0023	0.0002	0.0026	15	...	...	...	550	43
44	0.0019	0.0020	0.0021	0.0001	0.0024	14	...	...	...	500	44

	Conductor Resistance at 20°C, Ohms per Foot †, ††						Theoretical Nominal Bare Wire Diameter, Inches †, ††	
	Minimum	Nominal	Maximum					
45	3.080	3.348	3.616	0.00010	0.00205	11	0.00176	45
46	3.870	4.207	4.544	0.00010	0.00185	10	0.00157	46
47	4.868	5.291	5.714	0.00010	0.00170	8	0.00140	47
48	6.205	6.745	7.285	0.00010	0.00150	7	0.00124	48
49	7.744	8.417	9.090	0.00010	0.00130	6	0.00111	49
50	9.734	10.58	11.43	0.00010	0.00120	5	0.00099	50
51	12.32	13.39	14.46	0.00010	0.00110	...	0.00088	51
52	15.69	17.05	18.41	0.00010	0.00100	...	0.00078	52
53	19.48	21.17	22.86	0.00005	0.00085	...	0.00070	53
54	24.82	26.98	29.14	0.00005	0.00075	...	0.00062	54
55	31.54	34.28	37.02	0.00005	0.00070	...	0.00055	55
56	39.73	43.19	46.65	0.00005	0.00065	...	0.00049	56

* This maximum bare wire diameter shall be permitted to be exceeded; see 1.6.7.2.

† For metric equivalent, see Table 1-1.

†† Conductor size tolerance based on resistance; see 1.6.7.3.

Copyright National Electrical Manufacturers Association
Provided by IHS under license with NEMA
No reproduction or networking permitted without license from IHS

Not for Resale

MW 74-C (Heavy)
POLYESTER (AMIDE) (IMIDE), HEAVY FILM INSULATED ROUND COPPER MAGNET WIRE THERMAL CLASS 200

INSULATING MATERIALS The coating is based on polyester (amide)(imide) resins (1.4.2).

THERMAL CLASS 200°C when tested in accordance with Part 1, para. 1.8 and Part 3, para. 3.58.1.

GENERAL REQUIREMENTS See Part 1.

Properties	Test Procedure, See Part 3, Paragraph	Requirements
DIMENSIONS	3.2.1.1	See Table H (MW 74-C)
ADHERENCE AND FLEXIBILITY	3.3.1	No cracks visible in the film coating
ELONGATION	3.4	Not less than value in Table H (MW 74-C)
HEAT SHOCK	3.5	No cracks visible in the film coating after conditioning at 220°C
SPRINGBACK	3.7.1 3.7.2	14-30 AWG—not greater than value in Table H (MW 74-C) 4-13 AWG—not greater than 5°
DIELECTRIC STRENGTH	3.8.2 3.8.3	4-13 AWG—not less than value in Table H (MW 74-C) 14-44 AWG—not less than value in Table H (MW 74-C)
CONTINUITY	3.9.2 3.9.3	14-44 AWG—the number of discontinuities shall not exceed 5 45-50 AWG—the number of discontinuities shall not exceed 10
PERIODIC CONFORMANCE TESTS		
THERMOPLASTIC FLOW	3.50	Median not less than 300°C with heavy film insulated 18 or 36 AWG
SOLUBILITY	3.51	Two specimens of heavy film insulated 18 or 36 AWG immersed in xylene and 50/50 xylene/butyl Cellosolve shall not soften sufficiently to expose the bare conductor
DIELECTRIC STRENGTH AT RATED TEMPERATURE	3.52	Heavy film insulated wire shall average not less than 4275 volts for 18 AWG or 1900 volts with 36 AWG
SCRAPE RESISTANCE	3.59	Lowest "grams-to-fail" load for any one of the three tests and the average of the three tests shall not be less than the values in Table H (MW 74-C)

Copyright National Electrical Manufacturers Association
Provided by IHS under license with NEMA
No reproduction or networking permitted without license from IHS

Not for Resale

Table H (MW 74-C)
POLYESTER (AMIDE) (IMIDE), HEAVY FILM INSULATED ROUND COPPER MAGNET WIRE THERMAL CLASS 200

AWG Size	Bare Wire Diameter, Inches †			Insulation †		Elongation, Minimum	Scrape, Grams to Fail		Springback, Maximum	Dielectric Strength, Minimum	AWG Size
	Minimum	Nominal	Maximum	Minimum Increase in Diameter, Inches	Maximum Overall Diameter, Inches	Percent	Average	Minimum	Degrees per Turn	Breakdown Volts	
4	0.2023	0.2043	0.2053*	0.0037	0.2098	38	...	...	...	3700	4
5	0.1801	0.1819	0.1828*	0.0036	0.1872	37	...	...	...	3600	5
6	0.1604	0.1620	0.1628*	0.0035	0.1671	37	...	...	...	3500	6
7	0.1429	0.1443	0.1450*	0.0034	0.1491	36	...	...	...	3400	7
8	0.1272	0.1285	0.1292*	0.0033	0.1332	36	...	...	...	3300	8
9	0.1133	0.1144	0.1150*	0.0032	0.1189	36	...	...	...	3200	9
10	0.1009	0.1019	0.1024*	0.0031	0.1061	35	1490	1270	...	6200	10
11	0.0898	0.0907	0.0912*	0.0030	0.0948	35	1490	1270	...	6000	11
12	0.0800	0.0808	0.0812*	0.0029	0.0847	34	1490	1270	...	5800	12
13	0.0713	0.0720	0.0724*	0.0028	0.0757	34	1490	1270	...	5600	13
14	0.0635	0.0641	0.0644*	0.0032	0.0682	33	1490	1270	42	6325	14
15	0.0565	0.0571	0.0574*	0.0030	0.0609	33	1400	1190	46	6175	15
16	0.0503	0.0508	0.0511*	0.0029	0.0545	33	1310	1115	50	6000	16
17	0.0448	0.0453	0.0455*	0.0028	0.0488	32	1230	1045	54	5850	17
18	0.0399	0.0403	0.0405*	0.0026	0.0437	32	1150	980	58	5700	18
19	0.0355	0.0359	0.0361*	0.0025	0.0391	31	1070	910	62	5500	19
20	0.0317	0.0320	0.0322*	0.0023	0.0351	30	1000	850	66	5400	20
21	0.0282	0.0285	0.0286*	0.0022	0.0314	30	940	800	53	5250	21
22	0.0250	0.0253	0.0254*	0.0021	0.0281	29	880	750	58	5125	22
23	0.0224	0.0226	0.0227*	0.0020	0.0253	29	820	700	62	5000	23
24	0.0199	0.0201	0.0202*	0.0019	0.0227	28	770	655	67	4850	24
25	0.0177	0.0179	0.0180*	0.0018	0.0203	28	720	615	72	4725	25
26	0.0157	0.0159	0.0160*	0.0017	0.0182	27	675	575	76	4600	26
27	0.0141	0.0142	0.0143	0.0016	0.0164	27	635	540	50	4500	27
28	0.0125	0.0126	0.0127	0.0016	0.0147	26	595	510	55	4375	28
29	0.0112	0.0113	0.0114	0.0015	0.0133	26	560	480	61	4250	29
30	0.0099	0.0100	0.0101	0.0014	0.0119	25	525	450	66	4150	30
31	0.0088	0.0089	0.0090	0.0013	0.0108	24	...	...	...	3825	31
32	0.0079	0.0080	0.0081	0.0012	0.0098	24	...	...	...	3525	32
33	0.0070	0.0071	0.0072	0.0011	0.0088	23	...	...	...	3250	33
34	0.0062	0.0063	0.0064	0.0010	0.0078	22	...	...	...	2975	34
35	0.0055	0.0056	0.0057	0.0009	0.0070	21	...	...	...	2750	35
36	0.0049	0.0050	0.0051	0.0008	0.0063	20	...	...	...	2525	36
37	0.0044	0.0045	0.0046	0.0008	0.0057	20	...	...	...	2325	37
38	0.0039	0.0040	0.0041	0.0007	0.0051	19	...	...	...	2150	38
39	0.0034	0.0035	0.0036	0.0006	0.0045	18	...	...	...	1975	39
40	0.0030	0.0031	0.0032	0.0006	0.0040	17	...	...	...	1800	40
41	0.0027	0.0028	0.0029	0.0005	0.0036	17	...	...	...	1675	41
42	0.0024	0.0025	0.0026	0.0004	0.0032	16	...	...	...	1525	42
43	0.0021	0.0022	0.0023	0.0004	0.0029	15	...	...	...	1400	43
44	0.0019	0.0020	0.0021	0.0004	0.0027	14	...	...	...	1300	44
	Conductor Resistance at 20°C Ohms per Foot †, ††						Theoretical Nominal Bare Wire Diameter, Inches †, ††				
	Minimum	Nominal	Maximum								
45	3.080	3.348	3.616	0.00030	0.00230	11	0.00176				45
46	3.870	4.207	4.544	0.00030	0.00210	10	0.00157				46
47	4.868	5.291	5.714	0.00030	0.00190	8	0.00140				47
48	6.205	6.745	7.285	0.00020	0.00170	7	0.00124				48
49	7.744	8.417	9.090	0.00020	0.00150	6	0.00111				49
50	9.734	10.58	11.43	0.00020	0.00140	5	0.00099				50

*This maximum bare wire diameter shall be permitted to be exceeded; see 1.6.7.2.

† For metric equivalent, see Table 1-2.

†† Conductor size tolerance based on resistance; see 1.6.7.3.

Copyright National Electrical Manufacturers Association
Provided by IHS under license with NEMA
No reproduction or networking permitted without license from IHS

Not for Resale

MW 75-C (Single)
POLYURETHANE, SINGLE FILM INSULATED ROUND COPPER MAGNET WIRE FOR SOLDERABLE APPLICATIONS THERMAL CLASS 130

INSULATING MATERIALS The coating is based on polyurethane resins (1.4.2).

THERMAL CLASS 130°C when tested in accordance with Part 1, para. 1.8 and Part 3, para. 3.58.1.

GENERAL REQUIREMENTS See Part 1.

Properties	Test Procedure, See Part 3, Paragraph	Requirements
DIMENSIONS	3.2.1.1	See Table S (MW 75-C)
ADHERENCE AND FLEXIBILITY	3.3.1	No cracks visible in the film coating
ELONGATION	3.4	Not less than value in Table S (MW 75-C)
HEAT SHOCK	3.5	No cracks visible in the film coating after conditioning at 175°C; exception—use 6d mandrel for all sizes.
SPRINGBACK	3.7.1	Not greater than value in Table S (MW 75-C)
DIELECTRIC STRENGTH	3.8.3	Not less than value in Table S (MW 75-C)
CONTINUITY	3.9.2	25–44 AWG—the number of discontinuities shall not exceed 15 45–56 AWG—the number of discontinuities shall not exceed 25
SOLDERABILITY	3.13	Covered with continuous film of solder after immersion at 360°C as follows: 25-29 AWG 6 seconds 30-36 AWG 5 seconds 37-46 AWG 4 seconds 47-56 AWG 3 seconds
PERIODIC CONFORMANCE TESTS		
THERMOPLASTIC FLOW	3.50	Median not less than 200°C with heavy film insulated 36 AWG
SOLUBILITY	3.51	A specimen of heavy film insulated 36 AWG immersed in xylene shall not soften sufficiently to expose the bare conductor
DIELECTRIC STRENGTH AT RATED TEMPERATURE	3.52	Average not less than 1900 volts with heavy film insulated 36 AWG
SCRAPE RESISTANCE	3.59	Lowest "grams-to-fail" load for any one of the three tests and the average of the three tests shall not be less than the values in Table S (MW 75-C)

Copyright National Electrical Manufacturers Association
Provided by IHS under license with NEMA
No reproduction or networking permitted without license from IHS

Not for Resale

Table S (MW 75-C)
POLYURETHANE, SINGLE FILM INSULATED ROUND COPPER MAGNET WIRE FOR SOLDERABLE APPLICATIONS THERMAL CLASS 130

AWG Size	Bare Wire Diameter, Inches †			Insulation †		Elongation, Minimum	Scrape, Grams to Fail		Springback, Maximum Degrees per Turn	Dielectric Strength, Minimum Breakdown	AWG Size
	Minimum	Nominal	Maximum	Minimum Increase in Diameter, Inches	Maximum Overall Diameter, Inches	Percent	Average	Minimum		Volts	
25	0.0177	0.0179	0.0180*	0.0009	0.0194	28	350	300	72	2625	25
26	0.0157	0.0159	0.0160*	0.0009	0.0173	27	330	280	76	2550	26
27	0.0141	0.0142	0.0143	0.0008	0.0156	27	310	265	50	2500	27
28	0.0125	0.0126	0.0127	0.0008	0.0140	26	290	250	55	2425	28
29	0.0112	0.0113	0.0114	0.0007	0.0126	26	270	230	61	2375	29
30	0.0099	0.0100	0.0101	0.0007	0.0112	25	255	220	66	2300	30
31	0.0088	0.0089	0.0090	0.0006	0.0100	24	...	...	...	2075	31
32	0.0079	0.0080	0.0081	0.0006	0.0091	24	...	...	...	1850	32
33	0.0070	0.0071	0.0072	0.0005	0.0081	23	...	...	...	1675	33
34	0.0062	0.0063	0.0064	0.0005	0.0072	22	...	...	...	1500	34
35	0.0055	0.0056	0.0057	0.0004	0.0064	21	...	...	...	1325	35
36	0.0049	0.0050	0.0051	0.0004	0.0058	20	...	...	...	1200	36
37	0.0044	0.0045	0.0046	0.0003	0.0052	20	...	...	...	1075	37
38	0.0039	0.0040	0.0041	0.0003	0.0047	19	...	...	...	950	38
39	0.0034	0.0035	0.0036	0.0002	0.0041	18	...	...	...	850	39
40	0.0030	0.0031	0.0032	0.0002	0.0037	17	...	...	...	775	40
41	0.0027	0.0028	0.0029	0.0002	0.0033	17	...	...	...	700	41
42	0.0024	0.0025	0.0026	0.0002	0.0030	16	...	...	...	625	42
43	0.0021	0.0022	0.0023	0.0002	0.0026	15	...	...	...	550	43
44	0.0019	0.0020	0.0021	0.0001	0.0024	14	...	...	...	500	44
45	Conductor Resistance at 20°C Ohms per foot †, ††					11	Theoretical Nominal Bare Wire Diameter, Inches †, ††				45
	Minimum	Nominal	Maximum								
	3.080	3.348	3.616	0.00010	0.00205		0.00176				
46	3.870	4.207	4.544	0.00010	0.00185	10	0.00157				46
47	4.868	5.291	5.714	0.00010	0.00170	8	0.00140				47
48	6.205	6.745	7.285	0.00010	0.00150	7	0.00124				48
49	7.744	8.417	9.090	0.00010	0.00130	6	0.00111				49
50	9.734	10.58	11.43	0.00010	0.00120	5	0.00099				50
51	12.32	13.39	14.46	0.00010	0.00110	...	0.00088				51
52	15.69	17.05	18.41	0.00010	0.00100	...	0.00078				52
53	19.48	21.17	22.86	0.00005	0.00085	...	0.00070				53
54	24.82	26.98	29.14	0.00005	0.00075	...	0.00062				54
55	31.54	34.28	37.02	0.00005	0.00070	...	0.00055				55
56	39.73	43.19	46.65	0.00005	0.00065	...	0.00049				56

* This maximum bare wire diameter shall be permitted to be exceeded; see 1.6.7.2.
† For metric equivalent, see Table 1-1.
†† Conductor size tolerance based on resistance; see 1.6.7.3.

Copyright National Electrical Manufacturers Association
Provided by IHS under license with NEMA
No reproduction or networking permitted without license from IHS

Not for Resale

MW 75-C (Heavy)
POLYURETHANE, HEAVY FILM INSULATED ROUND COPPER MAGNET WIRE FOR SOLDERABLE APPLICATIONS THERMAL CLASS 130

INSULATING MATERIALS The coating is based on polyurethane resins (1.4.2).

THERMAL CLASS 130°C when tested in accordance with Part 1, para. 1.8 and Part 3, para. 3.58.1.

GENERAL REQUIREMENTS See Part 1.

Properties	Test Procedure, See Part 3, Paragraph	Requirements
DIMENSIONS	3.2.1.1	See Table H (MW 75-C)
ADHERENCE AND FLEXIBILITY	3.3.1	No cracks visible in the film coating
ELONGATION	3.4	Not less than value in Table H (MW 75-C)
HEAT SHOCK	3.5	No cracks visible in the film coating after conditioning at 175°C; exception—use 6d mandrel for all sizes
SPRINGBACK	3.7.1	Not greater than value in Table H (MW 75-C)
DIELECTRIC STRENGTH	3.8.3	Not less than value in Table H (MW 75-C)
CONTINUITY	3.9.2	25-44 AWG—the number of discontinuities shall not exceed 5 45-50 AWG—the number of discontinuities shall not exceed 10
SOLDERABILITY	3.13	Covered with continuous film of solder after immersion at 360°C as follows: 25-29 AWG 6 seconds 30-36 AWG 5 seconds 37-46 AWG 4 seconds 47-50 AWG 3 seconds
PERIODIC CONFORMANCE TESTS		
THERMOPLASTIC FLOW	3.50	Median not less than 200°C with heavy film insulated 36 AWG
SOLUBILITY	3.51	A specimen of heavy film insulated 36 AWG immersed in xylene shall not soften sufficiently to expose the bare conductor
DIELECTRIC STRENGTH AT RATED TEMPERATURE	3.52	Average not less than 1900 volts with heavy film insulated 36 AWG
SCRAPE RESISTANCE	3.59	Lowest "grams-to-fail" load for any one of the three tests and the average of the three tests shall not be less than the values in Table H (MW 75-C)

Copyright National Electrical Manufacturers Association
Provided by IHS under license with NEMA
No reproduction or networking permitted without license from IHS

Not for Resale

Table H (MW 75-C)
POLYURETHANE, HEAVY FILM INSULATED ROUND COPPER MAGNET WIRE FOR SOLDERABLE APPLICATIONS THERMAL CLASS 130

AWG Size	Bare Wire Diameter, Inches †			Insulation †		Elongation, Minimum	Scrape, Grams to Fail		Springback, Maximum Degrees per Turn	Dielectric Strength, Minimum Breakdown Volts	AWG Size
	Minimum	Nominal	Maximum	Minimal Increase in Diameter, Inches	Maximum Overall Diameter, Inches	Percent	Average	Minimum			
25	0.0177	0.0179	0.0180*	0.0018	0.0203	28	720	615	72	4725	25
26	0.0157	0.0159	0.0160*	0.0017	0.0182	27	675	575	76	4600	26
27	0.0141	0.0142	0.0143	0.0016	0.0164	27	635	540	50	4500	27
28	0.0125	0.0126	0.0127	0.0016	0.0147	26	595	510	55	4375	28
29	0.0112	0.0113	0.0114	0.0015	0.0133	26	560	480	61	4250	29
30	0.0099	0.0100	0.0101	0.0014	0.0119	25	525	450	66	4150	30
31	0.0088	0.0089	0.0090	0.0013	0.0108	24	...	...	...	3825	31
32	0.0079	0.0080	0.0081	0.0012	0.0098	24	...	...	...	3525	32
33	0.0070	0.0071	0.0072	0.0011	0.0088	23	...	...	...	3250	33
34	0.0062	0.0063	0.0064	0.0010	0.0078	22	...	...	...	2975	34
35	0.0055	0.0056	0.0057	0.0009	0.0070	21	...	...	...	2750	35
36	0.0049	0.0050	0.0051	0.0008	0.0063	20	...	...	...	2525	36
37	0.0044	0.0045	0.0046	0.0008	0.0057	20	...	...	...	2325	37
38	0.0039	0.0040	0.0041	0.0007	0.0051	19	...	...	...	2150	38
39	0.0034	0.0035	0.0036	0.0006	0.0045	18	...	...	...	1975	39
40	0.0030	0.0031	0.0032	0.0006	0.0040	17	...	...	...	1800	40
41	0.0027	0.0028	0.0029	0.0005	0.0036	17	...	...	...	1675	41
42	0.0024	0.0025	0.0026	0.0004	0.0032	16	...	...	...	1525	42
43	0.0021	0.0022	0.0023	0.0004	0.0029	15	...	...	...	1400	43
44	0.0019	0.0020	0.0021	0.0004	0.0027	14	...	...	...	1300	44
	Conductor Resistance at 20°C, Ohms per foot †, ††						Theoretical Nominal Bare Wire Diameter Inches †, ††				
	Minimum	Nominal	Maximum								
45	3.080	3.348	3.616	0.00030	0.00230	11	0.00176				45
46	3.870	4.207	4.544	0.00030	0.00210	10	0.00157				46
47	4.868	5.291	5.714	0.00030	0.00190	8	0.00140				47
48	6.205	6.745	7.285	0.00020	0.00170	7	0.00124				48
49	7.744	8.417	9.090	0.00020	0.00150	6	0.00111				49
50	9.734	10.58	11.43	0.00020	0.00140	5	0.00099				50

*This maximum bare wire diameter shall be permitted to be exceeded; see 1.6.7.2.
† For metric equivalent, see Table 1-2.
†† Conductor size tolerance based on resistance; see 1.6.7.3.

Copyright National Electrical Manufacturers Association
Provided by IHS under license with NEMA
No reproduction or networking permitted without license from IHS

Not for Resale

MW 76-A (Single)
POLYESTER (AMIDE) (IMIDE) OVERCOATED WITH POLYAMIDE, SINGLE FILM INSULATED ROUND ALUMINUM MAGNET WIRE THERMAL CLASS 180

INSULATING MATERIALS The conductor shall be coated with a dual film. The underlying coating is based on polyester (amide)(imide) resins (1.4.2). The superimposed coating is based on polyamide resins (1.4.2).

THERMAL CLASS 180°C when tested in accordance with Part 1, para. 1.8 and Part 3, para. 3.58.1.

GENERAL REQUIREMENTS See Part 1.

Properties	Test Procedure, See Part 3, Paragraph	Requirements
DIMENSIONS	3.2.1.1	See Table S (MW 76-A)
ADHERENCE AND FLEXIBILITY	3.3.1	No cracks visible in the film coating
ELONGATION	3.4	Not less than value in Table S (MW 76-A)
HEAT SHOCK	3.5	No cracks visible in the film coating after conditioning at 200°C
DIELECTRIC STRENGTH	3.8.3	Not less than value in Table S (MW 76-A)
CONTINUITY	3.9.2	The number of discontinuities shall not exceed 25
PERIODIC CONFORMANCE TESTS		
THERMOPLASTIC FLOW	3.50	Median not less than 225°C with heavy film insulated 18 AWG
SOLUBILITY	3.51	Two specimens of heavy film insulated 18 AWG immersed in xylene and 50/50 xylene/butyl Cellosolve shall not soften sufficiently to expose the bare conductor
DIELECTRIC STRENGTH AT RATED TEMPERATURE	3.52	Average not less than 3850 volts with heavy film insulated 18 AWG
SCRAPE RESISTANCE	3.59	Lowest "grams-to-fail" load for any one of the three tests and the average of the three tests shall not be less than the values in Table S (MW 76-A)

Copyright National Electrical Manufacturers Association
Provided by IHS under license with NEMA
No reproduction or networking permitted without license from IHS

Not for Resale

Table S (MW 76-A)
POLYESTER (AMIDE) (IMIDE) OVERCOATED WITH POLYAMIDE, SINGLE FILM INSULATED ROUND ALUMINUM MAGNET WIRE THERMAL CLASS 180

AWG Size	Bare Wire Diameter, Inches †			Insulation †		Elongation, Minimum	Scrape, Grams to Fail		Dielectric Strength, Minimum Breakdown	AWG Size
	Minimum	Nominal	Maximum	Minimum Increase in Diameter, Inches	Maximum Overall Diameter, Inches	Percent	Average	Minimum	Volts	
14	0.0635	0.0641	0.0644*	0.0016	0.0666	15	505	430	3175	14
15	0.0565	0.0571	0.0574*	0.0015	0.0594	15	470	400	3075	15
16	0.0503	0.0508	0.0511*	0.0014	0.0531	15	440	375	3000	16
17	0.0448	0.0453	0.0455*	0.0014	0.0475	15	415	350	2925	17
18	0.0399	0.0403	0.0405*	0.0013	0.0424	15	390	330	2850	18
19	0.0355	0.0359	0.0361*	0.0012	0.0379	15	360	305	2775	19
20	0.0317	0.0320	0.0322*	0.0012	0.0339	14	335	285	2700	20
21	0.0282	0.0285	0.0286*	0.0011	0.0303	14	315	265	2625	21
22	0.0250	0.0253	0.0254*	0.0011	0.0270	14	295	250	2575	22
23	0.0224	0.0226	0.0227*	0.0010	0.0243	14	275	235	2500	23
24	0.0199	0.0201	0.0202*	0.0010	0.0217	13	260	220	2425	24
25	0.0177	0.0179	0.0180*	0.0009	0.0194	13	245	205	2375	25
26	0.0157	0.0159	0.0160*	0.0009	0.0173	13	230	190	2300	26
27	0.0141	0.0142	0.0143	0.0008	0.0156	13	215	175	2250	27
28	0.0125	0.0126	0.0127	0.0008	0.0140	12	200	160	2175	28
29	0.0112	0.0113	0.0114	0.0007	0.0126	12	185	145	2150	29
30	0.0099	0.0100	0.0101	0.0007	0.0112	12	170	130	2075	30

* This maximum bare wire diameter shall be permitted to be exceeded; see 1.6.7.2.
† For metric equivalent, see Table 1-1.

Copyright National Electrical Manufacturers Association
Provided by IHS under license with NEMA
No reproduction or networking permitted without license from IHS

Not for Resale

MW 76-A (Heavy)
POLYESTER (AMIDE) (IMIDE) OVERCOATED WITH POLYAMIDE, HEAVY FILM INSULATED ROUND ALUMINUM MAGNET WIRE THERMAL CLASS 180

INSULATING MATERIALS The conductor shall be coated with a dual film. The underlying coating is based on polyester (amide)(imide) resins (1.4.2). The superimposed insulation is based on polyamide resins (1.4.2).

THERMAL CLASS 180°C when tested in accordance with Part 1, para. 1.8 and Part 3, para. 3.58.1.

GENERAL REQUIREMENTS See Part 1.

Properties	Test Procedure, See Part 3, Paragraph	Requirements
DIMENSIONS	3.2.1.1	See Table H (MW 76-A)
ADHERENCE AND FLEXIBILITY	3.3.1	No cracks visible in the film coating
ELONGATION	3.4	Not less than value in Table H (MW 76-A)
HEAT SHOCK	3.5	No cracks visible in the film coating after conditioning at 200°C
DIELECTRIC STRENGTH	3.8.3	Not less than value in Table H (MW 76-A)
CONTINUITY	3.9.2	The number of discontinuities shall not exceed 10
PERIODIC CONFORMANCE TESTS		
THERMOPLASTIC FLOW	3.50	Median not less than 225°C with heavy film insulated 18 AWG
SOLUBILITY	3.51	Two specimens of heavy film insulated 18 AWG immersed in xylene and 50/50 xylene/butyl Cellosolve shall not soften sufficiently to expose the bare conductor
DIELECTRIC STRENGTH AT RATED TEMPERATURE	3.52	Average not less than 3850 volts with heavy film insulated 18 AWG
SCRAPE RESISTANCE	3.59	Lowest "grams-to-fail" load for any one of the three tests and the average of the three tests shall not be less than the values in Table H (MW 76-A)

Copyright National Electrical Manufacturers Association
Provided by IHS under license with NEMA
No reproduction or networking permitted without license from IHS

Not for Resale

Table H (MW 76-A)
POLYESTER (AMIDE) (IMIDE) OVERCOATED WITH POLYAMIDE, HEAVY FILM INSULATED ROUND ALUMINUM MAGNET WIRE THERMAL CLASS 180

AWG Size	Bare Wire Diameter, Inches †			Insulation †		Elongation, Minimum	Scrape, Grams to Fail		Dielectric Strength, Minimum Breakdown	AWG Size
	Minimum	Nominal	Maximum	Minimum Increase in Diameter, Inches	Maximum Overall Diameter, Inches	Percent	Average	Minimum	Volts	
10	0.1009	0.1019	0.1024*	0.0031	0.1061	15	895	780	5575	10
11	0.0898	0.0907	0.0912*	0.0030	0.0948	15	895	780	5400	11
12	0.0800	0.0808	0.0812*	0.0029	0.0847	15	895	760	5225	12
13	0.0713	0.0720	0.0724*	0.0028	0.0757	15	895	760	5050	13
14	0.0635	0.0641	0.0644*	0.0032	0.0682	15	895	760	5700	14
15	0.0565	0.0571	0.0574*	0.0030	0.0609	15	840	715	5550	15
16	0.0503	0.0508	0.0511*	0.0029	0.0545	15	785	670	5400	16
17	0.0448	0.0453	0.0455*	0.0028	0.0488	15	740	625	5275	17
18	0.0399	0.0403	0.0405*	0.0026	0.0437	15	690	590	5125	18
19	0.0355	0.0359	0.0361*	0.0025	0.0391	15	640	545	5000	19
20	0.0317	0.0320	0.0322*	0.0023	0.0351	14	600	510	4850	20
21	0.0282	0.0285	0.0286*	0.0022	0.0314	14	565	480	4725	21
22	0.0250	0.0253	0.0254*	0.0021	0.0281	14	520	450	4625	22
23	0.0224	0.0226	0.0227*	0.0020	0.0253	14	490	420	4500	23
24	0.0199	0.0201	0.0202*	0.0019	0.0227	13	460	395	4375	24

* This maximum bare wire diameter shall be permitted to be exceeded; see 1.6.7.2.
† For metric equivalent, see Table 1-2.

Copyright National Electrical Manufacturers Association
Provided by IHS under license with NEMA
No reproduction or networking permitted without license from IHS

Not for Resale

MW 76-C (Single)
POLYESTER (AMIDE) (IMIDE) OVERCOATED WITH POLYAMIDE, SINGLE FILM INSULATED ROUND COPPER MAGNET WIRE THERMAL CLASS 180

INSULATING MATERIALS The conductor shall be coated with a dual film. The underlying coating is based on polyester (amide)(imide) resins (1.4.2). The superimposed insulation is based on polyamide resins (1.4.2).

THERMAL CLASS 180°C when tested in accordance with Part 1, para. 1.8 and Part 3, para. 3.58.1.

GENERAL REQUIREMENTS See Part 1.

Properties	Test Procedure, Part 3, Paragraph	Requirements
DIMENSIONS	3.2.1.1	See Table S (MW 76-C)
ADHERENCE AND FLEXIBILITY	3.3.1	No cracks visible in the film coating
ELONGATION	3.4	Not less than value in Table S (MW 76-C)
HEAT SHOCK	3.5	No cracks visible in the film coating after conditioning at 200°C
SPRINGBACK	3.7.1	Not greater than value in Table S (MW 76-C)
DIELECTRIC STRENGTH	3.8.3	Not less than value in Table S (MW 76-C)
CONTINUITY	3.9.2	The number of discontinuities shall not exceed 15
PERIODIC CONFORMANCE TESTS		
THERMOPLASTIC FLOW	3.50	Median not less than 225°C with heavy film insulated 18 or 36 AWG
SOLUBILITY	3.51	Two specimens of heavy film coated 18 or 36 AWG immersed in xylene and 50/50 xylene/butyl Cellosolve shall not soften sufficiently to expose the bare conductor
DIELECTRIC STRENGTH AT RATED TEMPERATURE	3.52	Average not less than 3825 volts with heavy film insulated 18 AWG or 1725 volts with 36 AWG
SCRAPE RESISTANCE	3.59	Lowest "grams-to-fail" load for any one of the three tests and the average of the three tests shall not be less than the values in Table S (MW 76-C)

Copyright National Electrical Manufacturers Association
Provided by IHS under license with NEMA
No reproduction or networking permitted without license from IHS

Not for Resale

Table S (MW 76-C)
POLYESTER (AMIDE) (IMIDE) OVERCOATED WITH POLYAMIDE, SINGLE FILM IINSULATED ROUND COPPER MAGNET WIRE THERMAL CLASS 180

AWG Size	Bare Wire Diameter, Inches †			Insulation †		Elongation, Minimum Percent	Scrape, Grams to Fail		Springback, Maximum Degrees per Turn	Dielectric Strength, Breakdown, Volts	AWG Size
	Minimum	Nominal	Maximum	Minimum Increase in Diameter, Inches	Maximum Overall Diameter, Inches		Average	Minimum			
14	0.0635	0.0641	0.0644*	0.0016	0.0666	33	840	715	42	3175	14
15	0.0565	0.0571	0.0574*	0.0015	0.0594	33	780	665	46	3075	15
16	0.0503	0.0508	0.0511*	0.0014	0.0531	33	735	625	50	3000	16
17	0.0448	0.0453	0.0455*	0.0014	0.0475	32	690	585	54	2925	17
18	0.0399	0.0403	0.0405*	0.0013	0.0424	32	645	550	58	2850	18
19	0.0355	0.0359	0.0361*	0.0012	0.0379	31	600	510	62	2775	19
20	0.0317	0.0320	0.0322*	0.0012	0.0339	30	560	475	66	2700	20
21	0.0282	0.0285	0.0286*	0.0011	0.0303	30	525	445	53	2625	21
22	0.0250	0.0253	0.0254*	0.0011	0.0270	29	490	415	58	2575	22
23	0.0224	0.0226	0.0227*	0.0010	0.0243	29	460	390	62	2500	23
24	0.0199	0.0201	0.0202*	0.0010	0.0217	28	430	365	67	2425	24
25	0.0177	0.0179	0.0180*	0.0009	0.0194	28	400	340	72	2375	25
26	0.0157	0.0159	0.0160*	0.0009	0.0173	27	380	325	76	2300	26
27	0.0141	0.0142	0.0143	0.0008	0.0156	27	355	300	50	2250	27
28	0.0125	0.0126	0.0127	0.0008	0.0140	26	335	285	55	2175	28
29	0.0112	0.0113	0.0114	0.0007	0.0126	26	310	265	61	2150	29
30	0.0099	0.0100	0.0101	0.0007	0.0112	25	295	250	66	2075	30
31	0.0088	0.0089	0.0090	0.0006	0.0100	24	...	...	...	1875	31
32	0.0079	0.0080	0.0081	0.0006	0.0091	24	...	...	...	1675	32
33	0.0070	0.0071	0.0072	0.0005	0.0081	23	...	...	...	1500	33
34	0.0062	0.0063	0.0064	0.0005	0.0072	22	...	...	...	1500	34
35	0.0055	0.0056	0.0057	0.0004	0.0064	21	...	...	...	1200	35
36	0.0049	0.0050	0.0051	0.0004	0.0058	20	...	...	...	1075	36
37	0.0044	0.0045	0.0046	0.0003	0.0052	20	...	...	...	975	37
38	0.0039	0.0040	0.0041	0.0003	0.0047	19	...	...	...	850	38
39	0.0034	0.0035	0.0036	0.0002	0.0041	18	...	...	...	775	39
40	0.0030	0.0031	0.0032	0.0002	0.0037	17	...	...	...	700	40
41	0.0027	0.0028	0.0029	0.0002	0.0033	17	...	...	...	625	41
42	0.0024	0.0025	0.0026	0.0002	0.0030	16	...	...	...	575	42
43	0.0021	0.0022	0.0023	0.0002	0.0026	15	...	...	...	500	43
44	0.0019	0.0020	0.0021	0.0001	0.0024	14	...	...	...	450	44

* This maximum bare wire diameter shall be permitted to be exceeded; see 1.6.7.2.

† For metric equivalent, see Table 1-1.

Copyright National Electrical Manufacturers Association
Provided by IHS under license with NEMA
No reproduction or networking permitted without license from IHS

Not for Resale

MW 76-C (Heavy)
POLYESTER (AMIDE)(IMIDE) OVERCOATED WITH POLYAMIDE, HEAVY FILM INSULATED ROUND COPPER MAGNET WIRE THERMAL CLASS 180

INSULATING MATERIALS The conductor shall be coated with a dual film. The underlying coating is based on polyester (amide)(imide) resins (1.4.2). The superimposed insulation is based on polyamide resins (1.4.2).

THERMAL CLASS 180°C when tested in accordance with Part 1, para. 1.8 and Part 3, para. 3.58.1.

GENERAL REQUIREMENTS See Part 1.

Properties	Test Procedure, See Part 3, Paragraph	Requirements
DIMENSIONS	3.2.1.1	See Table H (MW 76-C)
ADHERENCE AND FLEXIBILITY	3.3.1	No cracks visible in the film coating
ELONGATION	3.4	Not less than value in Table H (MW 76-C)
HEAT SHOCK	3.5	No cracks visible in the film coating after conditioning at 200°C
SPRINGBACK	3.7.1 3.7.2	14-30 AWG —not greater than value in Table H (MW 76-C) 10-13 AWG —not greater than 5°
DIELECTRIC STRENGTH	3.8.3	Not less than value in Table H (MW 76-C)
CONTINUITY	3.9.2	The number of discontinuities shall not exceed 5
PERIODIC CONFORMANCE TESTS		
THERMOPLASTIC FLOW	3.50	Median not less than 225°C with heavy film insulated 18 or 36 AWG
SOLUBILITY	3.51	Two specimens of heavy film insulated 18 or 36 AWG immersed in xylene and 50/50 xylene/butyl Cellosolve shall not soften sufficiently to expose the bare conductor
DIELECTRIC STRENGTH AT RATED TEMPERATURE	3.52	Average not less than 3825 volts with heavy film insulated 18 AWG or 1725 volts with 36 AWG
SCRAPE RESISTANCE	3.59	Lowest "grams-to-fail" load for any one of the three tests and the average of the three tests shall not be less than the values in Table H (MW 76-C)

Copyright National Electrical Manufacturers Association
Provided by IHS under license with NEMA
No reproduction or networking permitted without license from IHS

Not for Resale

Table H (MW 76-C)
POLYESTER (AMIDE) (IMIDE) OVERCOATED WITH POLYAMIDE, HEAVY FILM INSULATED ROUND COPPER MAGNET WIRE THERMAL CLASS 180

AWG Size	Bare Wire Diameter, Inches †			Insulation †		Elongation, Minimum	Scrape, Grams to Fail		Springback, Maximum	Dielectric Strength, Minimum	AWG Size
	Minimum	Nominal	Maximum	Minimum Increase in Diameter, Inches	Maximum Overall Diameter, Inches	Percent	Average	Minimum	Degrees per Turn	Breakdown Volts	
10	0.1009	0.1019	0.1024*	0.0031	0.1061	35	1490	1270	...	5575	10
11	0.0898	0.0907	0.0912*	0.0030	0.0948	35	1490	1270	...	5400	11
12	0.0800	0.0808	0.0812*	0.0029	0.0847	34	1490	1270	...	5225	12
13	0.0713	0.0720	0.0724*	0.0028	0.0757	34	1490	1270	...	5050	13
14	0.0635	0.0641	0.0644*	0.0032	0.0682	33	1490	1270	42	5700	14
15	0.0565	0.0571	0.0574*	0.0030	0.0609	33	1400	1190	46	5550	15
16	0.0503	0.0508	0.0511*	0.0029	0.0545	33	1310	1115	50	5400	16
17	0.0448	0.0453	0.0455*	0.0028	0.0488	32	1230	1045	54	5275	17
18	0.0399	0.0403	0.0405*	0.0026	0.0437	32	1150	980	58	5125	18
19	0.0355	0.0359	0.0361*	0.0025	0.0391	31	1070	910	62	5000	19
20	0.0317	0.0320	0.0322*	0.0023	0.0351	30	1000	850	66	4850	20
21	0.0282	0.0285	0.0286*	0.0022	0.0314	30	940	800	53	4725	21
22	0.0250	0.0253	0.0254*	0.0021	0.0281	29	880	750	58	4625	22
23	0.0224	0.0226	0.0227*	0.0020	0.0253	29	820	700	62	4500	23
24	0.0199	0.0201	0.0202*	0.0019	0.0227	28	770	655	67	4375	24
25	0.0177	0.0179	0.0180*	0.0018	0.0203	28	720	615	72	4250	25
26	0.0157	0.0159	0.0160*	0.0017	0.0182	27	675	575	76	4150	26
27	0.0141	0.0142	0.0143	0.0016	0.0164	27	635	540	50	4050	27
28	0.0125	0.0126	0.0127	0.0016	0.0147	26	595	510	55	3950	28
29	0.0112	0.0113	0.0114	0.0015	0.0133	26	560	480	61	3825	29
30	0.0099	0.0100	0.0101	0.0014	0.0119	25	525	450	66	3725	30
31	0.0088	0.0089	0.0090	0.0013	0.0108	24	...	...	...	3450	31
32	0.0079	0.0080	0.0081	0.0012	0.0098	24	...	...	...	3175	32
33	0.0070	0.0071	0.0072	0.0011	0.0088	23	...	...	...	2925	33
34	0.0062	0.0063	0.0064	0.0010	0.0078	22	...	...	...	2675	34
35	0.0055	0.0056	0.0057	0.0009	0.0070	21	...	...	...	2475	35
36	0.0049	0.0050	0.0051	0.0008	0.0063	20	...	...	...	2275	36
37	0.0044	0.0045	0.0046	0.0008	0.0057	20	...	...	...	2100	37
38	0.0039	0.0040	0.0041	0.0007	0.0051	19	...	...	...	1925	38
39	0.0034	0.0035	0.0036	0.0006	0.0045	18	...	...	...	1775	39
40	0.0030	0.0031	0.0032	0.0006	0.0040	17	...	...	...	1625	40
41	0.0027	0.0028	0.0029	0.0005	0.0036	17	...	...	...	1500	41
42	0.0024	0.0025	0.0026	0.0004	0.0032	16	...	...	...	1375	42
43	0.0021	0.0022	0.0023	0.0004	0.0029	15	...	...	...	1250	43
44	0.0019	0.0020	0.0021	0.0004	0.0027	14	...	...	...	1175	44

* This maximum bare wire diameter shall be permitted to be exceeded; see 1.6.7.2.
† For metric equivalent, see Table 1-2.

Copyright National Electrical Manufacturers Association
Provided by IHS under license with NEMA
No reproduction or networking permitted without license from IHS

Not for Resale

MW 76-C (Triple)
POLYESTER (AMIDE) (IMIDE) OVERCOATED WITH POLYAMIDE, TRIPLE FILM INSULATED ROUND COPPER MAGNET WIRE THERMAL CLASS 180

INSULATING MATERIALS The conductor shall be coated with a dual film. The underlying coating is based on polyester (amide) (imide) resins (1.4.2). The superimposed insulation is based on polyamide resins (1.4.2).

THERMAL CLASS 180°C when tested in accordance with Part 1, para. 1.8 and Part 3, para. 3.58.1.

GENERAL REQUIREMENTS See Part 1.

Properties	Test Procedure, See Part 3, Paragraph	Requirements
DIMENSIONS	3.2.1.1	See Table T (MW 76-C)
ADHERENCE AND FLEXIBILITY	3.3.1	No cracks visible in the film coating
ELONGATION	3.4	Not less than value in Table T (MW 76-C)
HEAT SHOCK	3.5	No cracks visible in the film coating after conditioning at 200°C
SPRINGBACK	3.7.1	Not greater than value in Table T (MW 76-C)
DIELECTRIC STRENGTH	3.8.3	Not less than value in Table T (MW 76-C)
CONTINUITY	3.9.2	The number of discontinuities shall not exceed 3
PERIODIC CONFORMANCE TESTS		
THERMOPLASTIC FLOW	3.50	Median not less than 225°C with heavy film insulated 18 AWG
SOLUBILITY	3.51	Two specimens of heavy film insulated 18 AWG immersed in xylene and 50/50 xylene/butyl Cellosolve shall not soften sufficiently to expose the bare conductor
DIELECTRIC STRENGTH AT RATED TEMPERATURE	3.52	Average not less than 3825 volts with heavy film insulated 18 AWG
SCRAPE RESISTANCE	3.59	Lowest "grams-to-fail" load for any one of the three tests and the average of the three tests shall not be less than the values in Table T (MW 76-C)

Copyright National Electrical Manufacturers Association
Provided by IHS under license with NEMA
No reproduction or networking permitted without license from IHS

Not for Resale

Table T (MW 76-C)
POLYESTER (AMIDE) (IMIDE) OVERCOATED WITH POLYAMIDE, TRIPLE FILM INSULATED ROUND COPPER MAGNET WIRE THERMAL CLASS 180

AWG Size	Bare Wire Diameter, Inches †			Insulation †		Elongation, Minimum Percent	Scrape, Grams to Fail		Springback, Maximum Degrees per Turn	Dielectric Strength, Minimum Breakdown Volts	AWG Size
	Minimum	Nominal	Maximum	Minimum Increase in Diameter, Inches	Maximum Overall Diameter, Inches		Average	Minimum			
14	0.0635	0.0641	0.0644*	0.0048	0.0700	33	1735	1475	46	7600	14
15	0.0565	0.0571	0.0574*	0.0045	0.0627	33	1620	1375	49	7400	15
16	0.0503	0.0508	0.0511*	0.0043	0.0562	33	1525	1295	53	7200	16
17	0.0448	0.0453	0.0455*	0.0041	0.0504	32	1425	1210	58	7025	17
18	0.0399	0.0403	0.0405*	0.0039	0.0452	32	1335	1135	62	6850	18
19	0.0355	0.0359	0.0361*	0.0037	0.0406	31	1255	1065	66	6675	19
20	0.0317	0.0320	0.0322*	0.0035	0.0364	30	1180	1000	70	6475	20
21	0.0282	0.0285	0.0286*	0.0033	0.0326	30	1115	945	53	6325	21
22	0.0250	0.0253	0.0254*	0.0032	0.0293	29	1045	890	58	6175	22
23	0.0224	0.0226	0.0227*	0.0030	0.0264	29	975	830	64	6000	23
24	0.0199	0.0201	0.0202*	0.0029	0.0238	28	910	770	69	5850	24
25	0.0177	0.0179	0.0180*	0.0027	0.0214	28	850	720	74	5700	25
26	0.0157	0.0159	0.0160*	0.0026	0.0193	27	795	675	80	5525	26
27	0.0141	0.0142	0.0143	0.0024	0.0173	27	735	625	55	5400	27
28	0.0125	0.0126	0.0127	0.0023	0.0156	26	690	585	60	5275	28
29	0.0112	0.0113	0.0114	0.0022	0.0142	26	645	550	65	5125	29
30	0.0099	0.0100	0.0101	0.0021	0.0128	25	605	515	70	5000	30

* This maximum bare wire diameter shall be permitted to be exceeded; see 1.6.7.2.
† For metric equivalent, see Table 1-3.

Copyright National Electrical Manufacturers Association
Provided by IHS under license with NEMA
No reproduction or networking permitted without license from IHS

Not for Resale

MW 77-C (Single)
POLYESTER (IMIDE), SINGLE FILM INSULATED ROUND COPPER MAGNET WIRE FOR SOLDERABLE APPLICATIONS THERMAL CLASS 180

INSULATING MATERIALS The coating is based on polyester (imide) resins (1.4.2).

THERMAL CLASS 180°C when tested in accordance with Part 1, para. 1.8 and Part 3, para. 3.58.1.

GENERAL REQUIREMENTS See Part 1.

Properties	Test Procedure, See Part 3, Paragraph	Requirements
DIMENSIONS	3.2.1.1	See Table S (MW 77-C)
ADHERENCE AND FLEXIBILITY	3.3.1	No cracks visible in the film coating
ELONGATION	3.4	Not less than value in Table S (MW 77-C)
HEAT SHOCK	3.5	No cracks visible in the film coating after conditioning at 200°C
SPRINGBACK	3.7.1	Not greater than value in Table S (MW 77-C)
DIELECTRIC STRENGTH	3.8.3	Not less than value in Table S (MW 77-C)
CONTINUITY	3.9.2 3.9.3	25-44 AWG—the number of discontinuities shall not exceed 15 45-56 AWG—the number of discontinuities shall not exceed 25
SOLDERABILITY	3.13	Covered with continuous film of solder after immersion at 470°C as follows: 25-29 AWG 6 seconds 30-36 AWG 5 seconds 37-46 AWG 4 seconds 47-56 AWG 3 seconds
PERIODIC CONFORMANCE TESTS		
THERMOPLASTIC FLOW	3.50	Median not less than 225°C with heavy film insulated 36 AWG
SOLUBILITY	3.51	A specimen of heavy film insulated 36 AWG immersed in xylene shall not soften sufficiently to expose the bare conductor
DIELECTRIC STRENGTH AT RATED TEMPERATURE	3.52	Heavy film insulated wire shall not average less than 1900 volts for 36 AWG
SCRAPE RESISTANCE	3.59	Lowest "grams-to-fail" load for any one of the three tests and the average of the three tests shall not be less than the values in Table S (MW 77-C)

Copyright National Electrical Manufacturers Association
Provided by IHS under license with NEMA
No reproduction or networking permitted without license from IHS

Not for Resale

Table S (MW 77-C)
POLYESTER (IMIDE), SINGLE FILM INSULATED ROUND COPPER MAGNET WIRE FOR SOLDERABLE APPLICATIONS THERMAL CLASS 180

AWG Size	Bare Wire Diameter, Inches †			Insulation †		Elongation, Minimum Percent	Scrape, Grams to Fail		Springback, Maximum Degrees per Turn	Dielectric Strength, Minimum Breakdown Volts	AWG Size
	Minimum	Nominal	Maximum	Minimum Increase in Diameter, Inches	Maximum Overall Diameter, Inches		Average	Minimum			
25	0.0177	0.0179	0.0180*	0.0009	0.0194	28	350	300	72	2625	25
26	0.0157	0.0159	0.0160*	0.0009	0.0173	27	330	280	76	2550	26
27	0.0141	0.0142	0.0143	0.0008	0.0156	27	310	265	50	2500	27
28	0.0125	0.0126	0.0127	0.0008	0.0140	26	290	250	55	2425	28
29	0.0112	0.0113	0.0114	0.0007	0.0126	26	270	230	61	2375	29
30	0.0099	0.0100	0.0101	0.0007	0.0112	25	255	220	66	2300	30
31	0.0088	0.0089	0.0090	0.0006	0.0100	24	...	...	...	2075	31
32	0.0079	0.0080	0.0081	0.0006	0.0091	24	...	...	...	1850	32
33	0.0070	0.0071	0.0072	0.0005	0.0081	23	...	...	...	1675	33
34	0.0062	0.0063	0.0064	0.0005	0.0072	22	...	...	...	1500	34
35	0.0055	0.0056	0.0057	0.0004	0.0064	21	...	...	...	1325	35
36	0.0049	0.0050	0.0051	0.0004	0.0058	20	...	...	...	1200	36
37	0.0044	0.0045	0.0046	0.0003	0.0052	20	...	...	...	1075	37
38	0.0039	0.0040	0.0041	0.0003	0.0047	19	...	...	...	950	38
39	0.0034	0.0035	0.0036	0.0002	0.0041	18	...	...	...	850	39
40	0.0030	0.0031	0.0032	0.0002	0.0037	17	...	...	...	775	40
41	0.0027	0.0028	0.0029	0.0002	0.0033	17	...	...	...	700	41
42	0.0024	0.0025	0.0026	0.0002	0.0030	16	...	...	...	625	42
43	0.0021	0.0022	0.0023	0.0002	0.0026	15	...	...	...	550	43
44	0.0019	0.0020	0.0021	0.0001	0.0024	14	...	...	...	500	44
	Conductor Resistance at 20°C Ohms per foot †, ††						Theoretical Nominal Bare Wire Diameter, Inches †, ††				
	Minimum	Nominal	Maximum								
45	3.080	3.348	3.616	0.00010	0.00205	11	0.00176				45
46	3.870	4.207	4.544	0.00010	0.00185	10	0.00157				46
47	4.868	5.291	5.714	0.00010	0.00170	8	0.00140				47
48	6.205	6.745	7.285	0.00010	0.00150	7	0.00124				48
49	7.744	8.417	9.090	0.00010	0.00130	6	0.00111				49
50	9.734	10.58	11.43	0.00010	0.00120	5	0.00099				50
51	12.32	13.39	14.46	0.00010	0.00110	...	0.00088				51
52	15.69	17.05	18.41	0.00010	0.00100	...	0.00078				52
53	19.48	21.17	22.86	0.00005	0.00085	...	0.00070				53
54	24.82	26.98	29.14	0.00005	0.00075	...	0.00062				54
55	31.54	34.28	37.02	0.00005	0.00070	...	0.00055				55
56	39.73	43.19	46.65	0.00005	0.00065	...	0.00049				56

*This maximum bare wire diameter shall be permitted to be exceeded; see 1.6.7.2.

† For metric equivalent, see Table 1-1.

Copyright National Electrical Manufacturers Association
Provided by IHS under license with NEMA
No reproduction or networking permitted without license from IHS

Not for Resale

MW 77-C (Heavy)
POLYESTER (IMIDE), HEAVY FILM INSULATED ROUND COPPER MAGNET WIRE FOR SOLDERABLE APPLICATIONS THERMAL CLASS 180

INSULATING MATERIALS The coating is based on polyester (imide) resins (1.4.2).

THERMAL CLASS 180°C when tested in accordance with Part 1, para. 1.8 and Part 3, para. 3.58.1.

GENERAL REQUIREMENTS See Part 1.

Properties	Test Procedure, See Part 3, Paragraph	Requirements
DIMENSIONS	3.2.1.1	See Table H (MW 77-C)
ADHERENCE AND FLEXIBILITY	3.3.1	No cracks visible in the film coating
ELONGATION	3.4	Not less than value in Table H (MW 77-C)
HEAT SHOCK	3.5	No cracks visible in the film coating after conditioning at 200°C
SPRINGBACK	3.7.1	Not greater than value in Table H (MW 77-C)
DIELECTRIC STRENGTH	3.8.3	Not less than value in Table H (MW 77-C)
CONTINUITY	3.9.2 3.9.3	25–44 AWG—the number of discontinuities shall not exceed 5 45–56 AWG—the number of discontinuities shall not exceed 10
SOLDERABILITY	3.13	Covered with continuous film of solder after immersion at 470°C as follows: 25-29 AWG 6 seconds 30-36 AWG 5 seconds 37-46 AWG 4 seconds 47-56 AWG 4 seconds
PERIODIC CONFORMANCE TESTS		
THERMOPLASTIC FLOW	3.50	Median not less than 225°C with heavy film insulated 36 AWG
SOLUBILITY	3.51	A specimen of heavy film insulated 36 AWG immersed in xylene shall not soften sufficiently to expose the bare conductor
DIELECTRIC STRENGTH AT RATED TEMPERATURE	3.52	Heavy film insulated wire shall average not less than 1900 volts for 36 AWG
SCRAPE RESISTANCE	3.59	Lowest "grams-to-fail" load for any one of the three tests and the average of the three tests shall not be less than the values in Table H (MW 77-C)

Copyright National Electrical Manufacturers Association
Provided by IHS under license with NEMA
No reproduction or networking permitted without license from IHS

Not for Resale

Table H (MW 77-C)
POLYESTER (IMIDE), HEAVY FILM INSULATED ROUND COPPER MAGNET WIRE FOR SOLDERABLE APPLICATIONS THERMAL CLASS 180

AWG Size	Bare Wire Diameter, Inches †			Insulation †		Elongation, Minimum Percent	Scrape, Grams to Fail		Springback, Maximum Degrees per Turn	Dielectric Strength, Minimum Breakdown Volts	AWG Size
	Minimum	Nominal	Maximum	Minimum Increase in Diameter, Inches	Maximum Overall Diameter, Inches		Average	Minimum			
25	0.0177	0.0179	0.0180*	0.0018	0.0203	28	635	540	72	4725	25
26	0.0157	0.0159	0.0160*	0.0017	0.0182	27	595	505	76	4600	26
27	0.0141	0.0142	0.0143	0.0016	0.0164	27	560	475	50	4500	27
28	0.0125	0.0126	0.0127	0.0016	0.0147	26	525	450	55	4375	28
29	0.0112	0.0113	0.0114	0.0015	0.0133	26	495	420	61	4250	29
30	0.0099	0.0100	0.0101	0.0014	0.0119	25	460	395	66	4150	30
31	0.0088	0.0089	0.0090	0.0013	0.0108	24	...	...	...	3825	31
32	0.0079	0.0080	0.0081	0.0012	0.0098	24	...	...	...	3525	32
33	0.0070	0.0071	0.0072	0.0011	0.0088	23	...	...	...	3250	33
34	0.0062	0.0063	0.0064	0.0010	0.0078	22	...	...	...	2975	34
35	0.0055	0.0056	0.0057	0.0009	0.0070	21	...	...	...	2750	35
36	0.0049	0.0050	0.0051	0.0008	0.0063	20	...	...	...	2525	36
37	0.0044	0.0045	0.0046	0.0008	0.0057	20	...	...	...	2325	37
38	0.0039	0.0040	0.0041	0.0007	0.0051	19	...	...	...	2150	38
39	0.0034	0.0035	0.0036	0.0006	0.0045	18	...	...	...	1975	39
40	0.0030	0.0031	0.0032	0.0006	0.0040	17	...	...	...	1800	40
41	0.0027	0.0028	0.0029	0.0005	0.0036	17	...	...	...	1675	41
42	0.0024	0.0025	0.0026	0.0004	0.0032	16	...	...	...	1525	42
43	0.0021	0.0022	0.0023	0.0004	0.0029	15	...	...	...	1400	43
44	0.0019	0.0020	0.0021	0.0004	0.0027	14	...	...	...	1300	44
	Conductor Resistance at 20°C Ohms per Foot †, ††						Theoretical Nominal Bare Wire Diameter, Inches †, ††				
	Minimum	Nominal	Maximum								
45	3.080	3.348	3.616	0.00030	0.00230	11	0.00176				45
46	3.870	4.207	4.544	0.00030	0.00210	10	0.00157				46
47	4.868	5.291	5.714	0.00030	0.00190	8	0.00140				47
48	6.205	6.745	7.285	0.00020	0.00170	7	0.00124				48
49	7.744	8.417	9.090	0.00020	0.00150	6	0.00111				49
50	9.734	10.58	11.43	0.00020	0.00140	5	0.00099				50
51	12.32	13.39	14.46	0.00010	0.00110	...	0.00088				51
52	15.69	17.05	18.41	0.00010	0.00100	...	0.00078				52
53	19.48	21.17	22.86	0.00005	0.00085	...	0.00070				53
54	24.82	26.98	29.14	0.00005	0.00075	...	0.00062				54
55	31.54	34.28	37.02	0.00005	0.00070	...	0.00055				55
56	39.73	43.19	46.65	0.00005	0.00065	...	0.00049				56

* This maximum bare wire diameter shall be permitted to be exceeded; see 1.6.7.2.

† For metric equivalent, see Table 1-2.

†† Conductor size tolerance based on resistance; see 1.6.7.3.

Copyright National Electrical Manufacturers Association
Provided by IHS under license with NEMA
No reproduction or networking permitted without license from IHS

Not for Resale

MW 78-C (Single)
POLYESTER (IMIDE) OVERCOATED WITH POLYAMIDE, SINGLE FILM INSULATED ROUND COPPER MAGNET WIRE FOR SOLDERABLE APPLICATIONS THERMAL CLASS 180

INSULATING MATERIALS The coonductor shall be coated with dual film. The underlying coating is based on polyester (imide) resins (1.4.2). The superimposed coating is based on polyamide resins (1.4.2).

THERMAL CLASS 180°C when tested in accordance with Part 1, para. 1.7 and Part 3, para. 3.58.1.

GENERAL REQUIREMENTS See Part 1.

Properties	Test Procedure, See Part 3, Paragraph	Requirements
DIMENSIONS	3.2.1.1	See Table S (MW 78-C)
ADHERENCE AND FLEXIBILITY	3.3.1	No cracks visible in the film coating
ELONGATION	3.4	Not less than value in Table S (MW 78-C)
HEAT SHOCK	3.5	No cracks visible in the film coating after conditioning at 200°C
SPRINGBACK	3.7.1	Not greater than value in Table S (MW 78-C)
DIELECTRIC STRENGTH	3.8.3	Not less than value in Table S (MW 78-C)
CONTINUITY	3.9.2	The number of discontinuities shall not exceed 15
SOLDERABILITY	3.13	Covered with continuous film of solder after immersion as follows: 14-15 AWG 10 seconds at 455°C 16-19 AWG 8 seconds at 455°C 20-29 AWG 6 seconds at 455°C 30-36 AWG 5 seconds at 455°C 37-44 AWG 4 seconds at 455°C
PERIODIC CONFORMANCE TESTS		
THERMOPLASTIC FLOW	3.50	Median not less than 200°C with heavy film insualted 18 or 36 AWG
SOLUBILITY	3.51	A specimen of heavy film insulated 18 or 36 AWG immersed in xylene shall not soften sufficiently to expose the bare conductor
DIELECTRIC STRENGTH AT RATED TEMPERATURE	3.52	Heavy film insulated wire shall average not less than 3825 volts for 18 AWG or 1725 volts for 36 AWG
SCRAPE RESISTANCE	3.59	Lowest "grams-to-fail" load for any one of the three tests and the average of the three tests shall not be less than the values in Table S (MW 78-C)

Copyright National Electrical Manufacturers Association
Provided by IHS under license with NEMA
No reproduction or networking permitted without license from IHS

Not for Resale

Table S (MW 78-C)
POLYESTER (IMIDE) OVERCOATED WITH POLYAMIDE, SINGLE FILM INSULATED ROUND COPPER MAGNET WIRE FOR SOLDERABLE APPLICATIONS THERMAL CLASS 180

AWG Size	Bare Wire Diameter, Inches †			Insulation †		Elongation, Minimum	Scrape, Grams to Fail		Springback, Maximum Degrees	Dielectric Strength, Minimum Breakdown,	AWG Size
	Minimum	Nominal	Maximum	Minimum Increase in Diameter, Inches	Maximum Overall Diameter, Inches	Percent	Average	Minimum	per Turn	Volts	
14	0.0635	0.0641	0.0644*	0.0016	0.0666	33	740	630	42	3175	14
15	0.0565	0.0571	0.0574*	0.0015	0.0594	33	685	585	46	3075	15
16	0.0503	0.0508	0.0511*	0.0014	0.0531	33	645	550	50	3000	16
17	0.0448	0.0453	0.0455*	0.0014	0.0475	32	605	515	54	2925	17
18	0.0399	0.0403	0.0405*	0.0013	0.0424	32	570	485	58	2850	18
19	0.0355	0.0359	0.0361*	0.0012	0.0379	31	530	450	62	2775	19
20	0.0317	0.0320	0.0322*	0.0012	0.0339	30	495	420	66	2700	20
21	0.0282	0.0285	0.0286*	0.0011	0.0303	30	460	390	53	2625	21
22	0.0250	0.0253	0.0254*	0.0011	0.0270	29	430	365	58	2575	22
23	0.0224	0.0226	0.0227*	0.0010	0.0243	29	405	345	62	2500	23
24	0.0199	0.0201	0.0202*	0.0010	0.0217	28	380	320	67	2425	24
25	0.0177	0.0179	0.0180*	0.0009	0.0194	28	350	300	72	2375	25
26	0.0157	0.0159	0.0160*	0.0009	0.0173	27	335	285	76	2300	26
27	0.0141	0.0142	0.0143	0.0008	0.0156	27	310	265	50	2250	27
28	0.0125	0.0126	0.0127	0.0008	0.0140	26	295	250	55	2175	28
29	0.0112	0.0113	0.0114	0.0007	0.0126	26	275	235	61	2150	29
30	0.0099	0.0100	0.0101	0.0007	0.0112	25	260	220	66	2075	30
31	0.0088	0.0089	0.0090	0.0006	0.0100	24	...	...	...	1875	31
32	0.0079	0.0080	0.0081	0.0006	0.0091	24	...	...	...	1675	32
33	0.0070	0.0071	0.0072	0.0005	0.0081	23	...	...	...	1500	33
34	0.0062	0.0063	0.0064	0.0005	0.0072	22	...	...	...	1350	34
35	0.0055	0.0056	0.0057	0.0004	0.0064	21	...	...	...	1200	35
36	0.0049	0.0050	0.0051	0.0004	0.0058	20	...	...	...	1075	36
37	0.0044	0.0045	0.0046	0.0003	0.0052	20	...	...	...	975	37
38	0.0039	0.0040	0.0041	0.0003	0.0047	19	...	...	...	850	38
39	0.0034	0.0035	0.0036	0.0002	0.0041	18	...	...	...	775	39
40	0.0030	0.0031	0.0032	0.0002	0.0037	17	...	...	...	700	40
41	0.0027	0.0028	0.0029	0.0002	0.0033	17	...	...	...	625	41
42	0.0024	0.0025	0.0026	0.0002	0.0030	16	...	...	...	575	42
43	0.0021	0.0022	0.0023	0.0002	0.0026	15	...	...	...	500	43
44	0.0019	0.0020	0.0021	0.0001	0.0024	14	...	...	...	450	44

*This maximum bare wire diameter shall be permitted to be exceeded; see 1.6.7.2.
† For metric equivalent, see Table 1-1.

Copyright National Electrical Manufacturers Association
Provided by IHS under license with NEMA
No reproduction or networking permitted without license from IHS

Not for Resale

MW 78-C (Heavy)
POLYESTER (IMIDE) OVERCOATED WITH POLYAMIDE, HEAVY FILM INSULATED ROUND COPPER MAGNET WIRE FOR SOLDERABLE APPLICATIONS THERMAL CLASS 180

INSULATING MATERIALS The conductor shall be coated with dual film. The underlying coating is based on polyester (imide) resins (1.4.2). The superimposed coating is based on polyamide resins (1.4.2).

THERMAL CLASS 180°C when tested in accordance with Part 1, para. 1.8 and Part 3, para. 3.58.1.

GENERAL REQUIREMENTS See Part 1.

Properties	Test Procedure, See Part 3, Paragraph	Requirements
DIMENSIONS	3.2.1.1	See Table H (MW 78-C)
ADHERENCE AND FLEXIBILITY	3.3.1	No cracks visible in the film coating
ELONGATION	3.4	Not less than value in Table H (MW 78-C)
HEAT SHOCK	3.5	No cracks visible in the film coating after conditioning at 200°C
SPRINGBACK	3.7.1	Not greater than value in Table H (MW 78-C)
DIELECTRIC STRENGTH	3.8.3	Not less than value in Table H (MW 78-C)
CONTINUITY	3.9.2	The number of discontinuities shall not exceed 5
SOLDERABILITY	3.13	Covered with continuous film of solder after immersion as follows: 14-15 AWG 10 seconds at 455°C 16-19 AWG 8 seconds at 455°C 20-29 AWG 6 seconds at 455°C 30-36 AWG 5 seconds at 455°C 37-44 AWG 4 seconds at 455°C
PERIODIC CONFORMANCE TESTS		
THERMOPLASTIC FLOW	3.50	Median not less than 200°C with heavy film insulated 18 or 36 AWG
SOLUBILITY	3.51	A specimen of heavy film insulated 18 or 36 AWG immersed in xylene shall not soften sufficiently to expose the bare conductor
DIELECTRIC STRENGTH AT RATED TEMPERATURE	3.52	Heavy film insulated wire shall average not less than 3825 volts for 18 AWG or 1725 volts for 36 AWG
SCRAPE RESISTANCE	3.59	Lowest "grams-to-fail" load for any one of the three tests and the average of the three tests shall not be less than the values in Table H (MW 78-C)

Copyright National Electrical Manufacturers Association
Provided by IHS under license with NEMA
No reproduction or networking permitted without license from IHS

Not for Resale

Table H (MW 78-C)
POLYESTER (IMIDE) OVERCOATED WITH POLYAMIDE, HEAVY FILM INSULATED ROUND COPPER MAGNET WIRE FOR SOLDERABLE APPLICATIONS THERMAL CLASS 180

AWG Size	Bare Wire Diameter, Inches†			Insulation †		Elongation, Minimum	Scrape, Grams to Fail		Springback, Maximum	Dielectric Strength, Minimum	AWG Size
	Minimum	Nominal	Maximum	Minimum Increase in Diameter, Inches	Maximum Overall Diameter, Inches	Percent	Average	Minimum	Degrees per Turn	Breakdown Volts	
14	0.0635	0.0641	0.0644*	0.0032	0.0682	33	1310	1120	42	5700	14
15	0.0565	0.0571	0.0574*	0.0030	0.0609	33	1230	1045	46	5550	15
16	0.0503	0.0508	0.0511*	0.0029	0.0545	33	1155	980	50	5400	16
17	0.0448	0.0453	0.0455*	0.0028	0.0488	32	1080	920	54	5275	17
18	0.0399	0.0403	0.0405*	0.0026	0.0437	32	1010	860	58	5125	18
19	0.0355	0.0359	0.0361*	0.0025	0.0391	31	940	800	62	5000	19
20	0.0317	0.0320	0.0322*	0.0023	0.0351	30	880	750	66	4850	20
21	0.0282	0.0285	0.0286*	0.0022	0.0314	30	825	705	53	4725	21
22	0.0250	0.0253	0.0254*	0.0021	0.0281	29	775	660	58	4625	22
23	0.0224	0.0226	0.0227*	0.0020	0.0253	29	720	615	62	4500	23
24	0.0199	0.0201	0.0202*	0.0019	0.0227	28	680	575	67	4375	24
25	0.0177	0.0179	0.0180*	0.0018	0.0203	28	635	540	72	4250	25
26	0.0157	0.0159	0.0160*	0.0017	0.0182	27	595	505	76	4150	26
27	0.0141	0.0142	0.0143	0.0016	0.0164	27	560	475	50	4050	27
28	0.0125	0.0126	0.0127	0.0016	0.0147	26	525	450	55	3950	28
29	0.0112	0.0113	0.0114	0.0015	0.0133	26	495	420	61	3825	29
30	0.0099	0.0100	0.0101	0.0014	0.0119	25	460	395	66	3725	30
31	0.0088	0.0089	0.0090	0.0013	0.0108	24	...	...	...	3450	31
32	0.0079	0.0080	0.0081	0.0012	0.0098	24	...	...	...	3175	32
33	0.0070	0.0071	0.0072	0.0011	0.0088	23	...	...	...	2925	33
34	0.0062	0.0063	0.0064	0.0010	0.0078	22	...	...	...	2675	34
35	0.0055	0.0056	0.0057	0.0009	0.0070	21	...	...	...	2475	35
36	0.0049	0.0050	0.0051	0.0008	0.0063	20	...	...	...	2275	36
37	0.0044	0.0045	0.0046	0.0008	0.0057	20	...	...	...	2100	37
38	0.0039	0.0040	0.0041	0.0007	0.0051	19	...	...	...	1925	38
39	0.0034	0.0035	0.0036	0.0006	0.0045	18	...	...	...	1775	39
40	0.0030	0.0031	0.0032	0.0006	0.0040	17	...	...	...	1625	40
41	0.0027	0.0028	0.0029	0.0005	0.0036	17	...	...	...	1500	41
42	0.0024	0.0025	0.0026	0.0004	0.0032	16	...	...	...	1375	42
43	0.0021	0.0022	0.0023	0.0004	0.0029	15	...	...	...	1250	43
44	0.0019	0.0020	0.0021	0.0004	0.0027	14	...	...	...	1175	44

* This maximum bare wire diameter shall be permitted to be exceeded; see 1.6.7.2.

† For metric equivalent, see Table 1-2.

Copyright National Electrical Manufacturers Association
Provided by IHS under license with NEMA
No reproduction or networking permitted without license from IHS

Not for Resale

MW 79-C (Single)
POLYURETHANE, SINGLE FILM INSULATED ROUND COPPER MAGNET WIRE FOR SOLDERABLE APPLICATIONS THERMAL CLASS 155

INSULATING MATERIALS The coating is based on polyurethane resins (1.4.2).

THERMAL CLASS 155°C when tested in accordance with Part 1, para. 1.8 and Part 3, para. 3.58.1.

GENERAL REQUIREMENTS See Part 1.

Properties	Test Procedure, See Part 3, Paragraph	Requirements
DIMENSIONS	3.2.1.1	See Table S (MW 79-C)
ADHERENCE AND FLEXIBILITY	3.3.1	No cracks visible in the film coating
ELONGATION	3.4	Not less than value in Table S (MW 79-C)
HEAT SHOCK	3.5	No cracks visible in the film coating after conditioning at 175°C
SPRINGBACK	3.7.1	Not greater than value in Table S (MW 79-C)
DIELECTRIC STRENGTH	3.8.3	Not less than value in Table S (MW 79-C)
CONTINUITY	3.9.2 3.9.3	25-44 AWG—the number of discontinuities shall not exceed 15 45-56 AWG—the number of discontinuities shall not exceed 25
SOLDERABILITY	3.13	Covered with continuous film of solder after immersion as follows: 25-29 AWG 6 seconds at 390°C 30-36 AWG 5 seconds at 390°C 37-46 AWG 4 seconds at 390°C 47-56 AWG 3 seconds at 360°C
PERIODIC CONFORMANCE TESTS		
THERMOPLASTIC FLOW	3.50	Median not less than 200°C with heavy film insulated 36 AWG
SOLUBILITY	3.51	A specimen of heavy film insulated 36 AWG immersed in xylene shall not soften sufficiently to expose the bare conductor
DIELECTRIC STRENGTH AT RATED TEMPERATURE	3.52	Average not less than 1900 volts with heavy film insulated 36 AWG
SCRAPE RESISTANCE	3.59	Lowest "grams-to-fail" load for any one of the three tests and the average of the three tests shall not be less than the values in Table S (MW 79-C)

Copyright National Electrical Manufacturers Association
Provided by IHS under license with NEMA
No reproduction or networking permitted without license from IHS

Not for Resale

Table S (MW 79-C)
POLYURETHANE, SINGLE FILM INSULATED ROUND COPPER MAGNET WIRE FOR SOLDERABLE APPLICATIONS THERMAL CLASS 155

AWG Size	Bare Wire Diameter, Inches †			Insulation †		Elongation, Minimum Percent	Scrape, Grams to Fail		Springback, Maximum Degrees per Turn	Dielectric Strength, Minimum Breakdown, Volts	AWG Size
	Minimum	Nominal	Maximum	Minimum Increase in Diameter, Inches	Maximum Overall Diameter, Inches		Average	Minimum			
25	0.0177	0.0179	0.0180*	0.0009	0.0194	28	350	300	72	2625	25
26	0.0157	0.0159	0.0160*	0.0009	0.0173	27	330	280	76	2550	26
27	0.0141	0.0142	0.0143	0.0008	0.0156	27	310	265	50	2500	27
28	0.0125	0.0126	0.0127	0.0008	0.0140	26	290	250	55	2425	28
29	0.0112	0.0113	0.0114	0.0007	0.0126	26	270	230	61	2375	29
30	0.0099	0.0100	0.0101	0.0007	0.0112	25	255	220	66	2300	30
31	0.0088	0.0089	0.0090	0.0006	0.0100	24	...	...	...	2075	31
32	0.0079	0.0080	0.0081	0.0006	0.0091	24	...	...	...	1850	32
33	0.0070	0.0071	0.0072	0.0005	0.0081	23	...	...	...	1675	33
34	0.0062	0.0063	0.0064	0.0005	0.0072	22	...	...	...	1500	34
35	0.0055	0.0056	0.0057	0.0004	0.0064	21	...	...	...	1325	35
36	0.0049	0.0050	0.0051	0.0004	0.0058	20	...	...	...	1200	36
37	0.0044	0.0045	0.0046	0.0003	0.0052	20	...	...	...	1075	37
38	0.0039	0.0040	0.0041	0.0003	0.0047	19	...	...	...	950	38
39	0.0034	0.0035	0.0036	0.0002	0.0041	18	...	...	...	850	39
40	0.0030	0.0031	0.0032	0.0002	0.0037	17	...	...	...	775	40
41	0.0027	0.0028	0.0029	0.0002	0.0033	17	...	...	...	700	41
42	0.0024	0.0025	0.0026	0.0002	0.0030	16	...	...	...	625	42
43	0.0021	0.0022	0.0023	0.0002	0.0026	15	...	...	...	550	43
44	0.0019	0.0020	0.0021	0.0001	0.0024	14	...	...	...	500	44
	Conductor Resistance at 20°C Ohms per Foot †, ††						Theoretical Nomianl Bare Wire Diameter Inches †, ††				
	Minimum	Nominal	Maximum								
45	3.080	3.348	3.616	0.00010	0.00205	11	0.00170				45
46	3.870	4.207	4.544	0.00010	0.00185	10	0.00157				46
47	4.868	5.291	5.714	0.00010	0.00170	8	0.00140				47
48	6.205	6.745	7.285	0.00010	0.00150	7	0.00124				48
49	7.744	8.417	9.090	0.00010	0.00130	6	0.00111				49
50	9.734	10.58	11.43	0.00010	0.00120	5	0.00099				50
51	12.32	13.39	14.46	0.00010	0.00110	...	0.00088				51
52	15.69	17.05	18.41	0.00010	0.00100	...	0.00078				52
53	19.48	21.17	22.86	0.00005	0.00085	...	0.00070				53
54	24.82	26.98	29.14	0.00005	0.00075	...	0.00062				54
55	31.54	34.28	37.02	0.00005	0.00070	...	0.00055				55
56	29.73	43.19	46.65	0.00005	0.00065	...	0.00049				56

* This maximum bare wire diameter shall be permitted to be exceeded; see 1.6.7.2.
† For metric equivalent, see Table 1-1.
†† Conductor size tolerance based on resistance; see 1.6.7.3.

Copyright National Electrical Manufacturers Association
Provided by IHS under license with NEMA
No reproduction or networking permitted without license from IHS

Not for Resale

MW 79-C (Heavy)
POLYURETHANE, HEAVY FILM INSULATED ROUND COPPER MAGNET WIRE FOR SOLDERABLE APPLICATIONS THERMAL CLASS 155

INSULATING MATERIALS The coating is based on polyurethane resins (1.4.2).

THERMAL CLASS 155°C when tested in accordance with Part 1, para. 1.8 and Part 3, para. 3.58.1.

GENERAL REQUIREMENTS See Part 1.

Properties	Test Procedure, See Part 3, Paragraph	Requirements
DIMENSIONS	3.2.1.1	See Table H (MW 79-C)
ADHERENCE AND FLEXIBILITY	3.3.1	No cracks visible in the film coating
ELONGATION	3.4	Not less than value in Table H (MW 79-C)
HEAT SHOCK	3.5	No cracks visible in the film coating after conditioning at 175°C
SPRINGBACK	3.7.1	Not greater than value in Table H (MW 79-C)
DIELECTRIC STRENGTH	3.8.3	Not less than value in Table H (MW 79-C)
CONTINUITY	3.9.2 3.9.3	25-44 AWG—the number of discontinuities shall not exceed 5 45-56 AWG—the number of discontinuities shall not exceed 10
SOLDERABILITY	3.13	Covered with continuous film of solder after immersion as follows: 25-29 AWG 6 seconds at 390°C 30-36 AWG 5 seconds at 390°C 37-46 AWG 4 seconds at 390°C 47-50 AWG 3 seconds at 360°C
PERIODIC CONFORMANCE TESTS		
THERMOPLASTIC FLOW	3.50	Median not less than 200°C with heavy film insulated 36 AWG
SOLUBILITY	3.51	A specimen of heavy film insulated 36 AWG immersed in xylene shall not soften sufficiently to expose the bare conductor
DIELECTRIC STRENGTH AT RATED TEMPERATURE	3.52	Average not less than 1900 volts with heavy film insulated 36 AWG
SCRAPE RESISTANCE	3.59	Lowest "grams-to-fail" load for any one of the three tests and the average of the three tests shall not be less than the values in Table H (MW 79-C)

Copyright National Electrical Manufacturers Association
Provided by IHS under license with NEMA
No reproduction or networking permitted without license from IHS

Not for Resale

Table H (MW 79-C)
POLYURETHANE, HEAVY FILM INSULATED ROUND COPPER MAGNET WIRE FOR SOLDERABLE APPLICATIONS THERMAL CLASS 155

AWG Size	Bare Wire Diameter, Inches †			Insulation †		Elongation, Minimum Percent	Scrape, Grams to Fail		Springback, Maximum Degrees per Turn	Dielectric Strength, Minimum Breakdown Volts	AWG Size
	Minimum	Nominal	Maximum	Minimum Increase in Diameter, Inches	Maximum Overall Diameter, Inches		Average	Minimum			
25	0.0177	0.0179	0.0180*	0.0018	0.0203	28	720	615	72	4725	25
26	0.0157	0.0159	0.0160*	0.0017	0.0182	27	675	575	76	4600	26
27	0.0141	0.0142	0.0143	0.0016	0.0164	27	635	540	50	4500	27
28	0.0125	0.0126	0.0127	0.0016	0.0147	26	595	510	55	4375	28
29	0.0112	0.0113	0.0114	0.0015	0.0133	26	560	480	61	4250	29
30	0.0099	0.0100	0.0101	0.0014	0.0119	25	525	450	66	4150	30
31	0.0088	0.0089	0.0090	0.0013	0.0108	24	...	...	...	3825	31
32	0.0079	0.0080	0.0081	0.0012	0.0098	24	...	...	...	3525	32
33	0.0070	0.0071	0.0072	0.0011	0.0088	23	...	...	...	3250	33
34	0.0062	0.0063	0.0064	0.0010	0.0078	22	...	...	...	2975	34
35	0.0055	0.0056	0.0057	0.0009	0.0070	21	...	...	...	2750	35
36	0.0049	0.0050	0.0051	0.0008	0.0063	20	...	...	...	2525	36
37	0.0044	0.0045	0.0046	0.0008	0.0057	20	...	...	...	2325	37
38	0.0039	0.0040	0.0041	0.0007	0.0051	19	...	...	...	2150	38
39	0.0034	0.0035	0.0036	0.0006	0.0045	18	...	...	...	1975	39
40	0.0030	0.0031	0.0032	0.0006	0.0040	17	...	...	...	1800	40
41	0.0027	0.0028	0.0029	0.0005	0.0036	17	...	...	...	1675	41
42	0.0024	0.0025	0.0026	0.0004	0.0032	16	...	...	...	1525	42
43	0.0021	0.0022	0.0023	0.0004	0.0029	15	...	...	...	1400	43
44	0.0019	0.0020	0.0021	0.0004	0.0027	14	...	...	...	1300	44
	Conductor Resistance at 20°C Ohms per Foot †, ††						Theoretical Nominal Bare Wire Diameter, Inches †, ††				
	Minimum	Nominal	Maximum								
45	3.080	3.348	3.616	0.00030	0.00230	11	0.00176				45
46	3.870	4.207	4.544	0.00030	0.00210	10	0.00157				46
47	4.808	5.291	5.714	0.00030	0.00190	8	0.00140				47
48	6.205	6.745	7.285	0.00020	0.00170	7	0.00124				48
49	7.744	8.417	9.090	0.00020	0.00150	6	0.00111				49
50	9.734	10.58	11.43	0.00020	0.00140	5	0.00099				50

* This maximum bare wire diameter shall be permitted to be exceeded; see 1.6.7.2.
† For metric equivalent, see Table 1-2.
†† Conductor size tolerance based on resistance; see 1.6.7.3.

Copyright National Electrical Manufacturers Association
Provided by IHS under license with NEMA
No reproduction or networking permitted without license from IHS

Not for Resale

MW 79-C (Triple)
POLYURETHANE, TRIPLE FILM INSULATED ROUND COPPER MAGNET WIRE FOR SOLDERABLE APPLICATIONS THERMAL CLASS 155

INSULATING MATERIALS The coating is based on polyurethane resins (1.4.2).

THERMAL CLASS 155°C when tested in accordance with Part 1, para. 1.8 and Part 3, para. 3.58.1.

GENERAL REQUIREMENTS See Part 1.

Properties	Test Procedure, See Part 3, Paragraph	Requirements
DIMENSIONS	3.2.1.1	See Table H (MW 79-C)
ADHERENCE AND FLEXIBILITY	3.3.1	No cracks visible in the film coating
ELONGATION	3.4	Not less than value in Table T (MW 79-C)
HEAT SHOCK	3.5	No cracks visible in the film coating after conditioning at 175°C
SPRINGBACK	3.7.1	Not greater than value in Table H (MW 79-C)
DIELECTRIC STRENGTH	3.8.3	Not less than value in Table T (MW 79-C)
CONTINUITY	3.9.2	The number of discontinuities shall not exceed 3
SOLDERABILITY	3.13	Covered with continuous film of solder after immersion as follows: 25-29 AWG 6 seconds at 390°C 30-36 AWG 5 seconds at 390°C 37-44 AWG 4 seconds at 390°C
PERIODIC CONFORMANCE TESTS		
THERMOPLASTIC FLOW	3.50	Median not less than 200°C with heavy film insulated 36 AWG
SOLUBILITY	3.51	A specimen of heavy film insulated 36 AWG immersed in xylene shall not soften sufficiently to expose the bare conductor
DIELECTRIC STRENGTH AT RATED TEMPERATURE	3.52	Average not less than 1900 volts with heavy film insulated 36 AWG
SCRAPE RESISTANCE	3.59	Lowest "grams-to-fail" load for any one of the three tests and the average of the three tests shall not be less than the values in Table T (MW 79-C)

Copyright National Electrical Manufacturers Association
Provided by IHS under license with NEMA
No reproduction or networking permitted without license from IHS

Not for Resale

Table T (MW 79-C)
POLYURETHANE, TRIPLE FILM INSULATED ROUND COPPER MAGNET WIRE FOR SOLDERABLE APPLICATIONS THERMAL CLASS 155

AWG Size	Bare Wire Diameter, Inches †			Insulation †		Elongation, Minimum Percent	Scrape, Grams to Fail		Springback, Maximum Degrees per Turn	Dielectric Strength, Minimum Breakdown Volts	AWG Size
	Minimum	Nominal	Maximum	Minimum Increase in Diameter, Inches	Maximum Overall Diameter, Inches		Average	Minimum			
25	0.0177	0.0179	0.0180	0.0027	0.0214	28	850	720	74	6325	25
26	0.0157	0.0159	0.0160	0.0026	0.0193	27	795	675	80	6150	26
27	0.0141	0.0142	0.0143	0.0024	0.0173	27	735	625	55	6000	27
28	0.0125	0.0126	0.0127	0.0023	0.0156	26	690	585	60	5850	28
29	0.0112	0.0113	0.0114	0.0022	0.0142	26	645	550	65	5700	29
30	0.0099	0.0100	0.0101	0.0021	0.0128	25	605	515	70	5550	30
31	0.0088	0.0089	0.0090	0.0017	0.0114	24	...	...	...	4600	31
32	0.0079	0.0080	0.0081	0.0016	0.0103	24	...	...	...	4275	32
33	0.0070	0.0071	0.0072	0.0014	0.0092	23	...	...	...	3950	33
34	0.0062	0.0063	0.0064	0.0013	0.0082	22	...	...	...	3675	34
35	0.0055	0.0056	0.0057	0.0012	0.0074	21	...	...	...	3425	35
36	0.0049	0.0050	0.0051	0.0011	0.0067	20	...	...	...	3175	36
37	0.0044	0.0045	0.0046	0.0010	0.0060	20	...	...	...	2950	37
38	0.0039	0.0040	0.0041	0.0009	0.0054	19	...	...	...	2725	38
39	0.0034	0.0035	0.0036	0.0008	0.0048	18	...	...	...	2525	39
40	0.0030	0.0031	0.0032	0.0008	0.0043	17	...	...	...	2350	40
41	0.0027	0.0028	0.0029	0.0007	0.0039	17	...	...	...	2175	41
42	0.0024	0.0025	0.0026	0.0007	0.0035	16	...	...	...	2025	42
43	0.0021	0.0022	0.0023	0.0006	0.0032	15	...	...	...	1875	43
44	0.0019	0.0020	0.0021	0.0006	0.0029	14	...	...	...	1750	44

* This maximum bare wire diameter shall be permitted to be exceeded; see 1.6.7.2.
† For metric equivalent, see Table 1-3.

Copyright National Electrical Manufacturers Association
Provided by IHS under license with NEMA
No reproduction or networking permitted without license from IHS

Not for Resale

MW 80-C (Single)
POLYURETHANE OVERCOATED WITH POLYAMIDE, SINGLE FILM INSULATED ROUND COPPER MAGNET WIRE FOR SOLDERABLE APPLICATIONS THERMAL CLASS 155

INSULATING MATERIALS The conductor shall be coated with a dual film. The underlying insulation is based on polyurethane resins (1.4.2). The superimposed coating is based on polyamide resins (1.4.2).

THERMAL CLASS 155°C when tested in accordance with Part 1, para. 1.8 and Part 3, para. 3.58.1.

GENERAL REQUIREMENTS See Part 1.

Properties	Test Procedure, See Part 3, Paragraph	Requirements
DIMENSIONS	3.2.1.1	See Table S (MW 80-C)
ADHERENCE AND FLEXIBILITY	3.3.1	No cracks visible in the film coating
ELONGATION	3.4	Not less than value in Table S (MW 80-C)
HEAT SHOCK	3.5	No cracks visible in the film coating after conditioning at 175°C
SPRINGBACK	3.7.1	Not greater than value in Table S (MW 80-C)
DIELECTRIC STRENGTH	3.8.3	Not less than value in Table S (MW 80-C)
CONTINUITY	3.9	The number of discontinuities shall not exceed 15
SOLDERABILITY	3.13	Covered with continuous film of solder after immersion as follows: 14-19 AWG 10 seconds at 430°C 20-23 AWG 8 seconds at 430°C 24-29 AWG 6 seconds at 390°C 30-36 AWG 5 seconds at 390°C 37-44 AWG 4 seconds at 390°C
PERIODIC CONFORMANCE TESTS		
THERMOPLASTIC FLOW	3.50	Median not less than 200°C with heavy film insulated 18 or 36 AWG
SOLUBILITY	3.51	A specimen of heavy film insulated 18 or 36 AWG immersed in xylene shall not soften sufficiently to expose the bare conductor
DIELECTRIC STRENGTH AT RATED TEMPERATURE	3.52	Heavy film insulated wire shall average not less than 3825 volts for 18 AWG or 1725 volts for 36 AWG
SCRAPE RESISTANCE	3.59	Lowest "grams-to-fail" load for any one of the three tests and the average of the three tests shall not be less than the values in Table S (MW 80-C)

Copyright National Electrical Manufacturers Association
Provided by IHS under license with NEMA
No reproduction or networking permitted without license from IHS

Not for Resale

Table S (MW 80-C)
POLYURETHANE OVERCOATED WITH POLYAMIDE, SINGLE FILM INSULATED ROUND COPPER MAGNET WIRE FOR SOLDERABLE APPLICATIONS THERMAL CLASS 155

AWG Size	Bare Wire Diameter, Inches †			Insulation †		Elongation, Minimum Percent	Scrape, Grams to Fail		Springback, Maximum Degrees per Turn	Dielectric Strength, Minimum Breakdown Volts	AWG Size
	Minimum	Nominal	Maximum	Minimum Increase in Diameter, Inches	Maximum Overall Diameter, Inches		Average	Minimum			
14	0.0635	0.0641	0.0644*	0.0016	0.0666	33	840	715	42	3175	14
15	0.0565	0.0571	0.0574*	0.0015	0.0594	33	780	665	46	3075	15
16	0.0503	0.0508	0.0511*	0.0014	0.0531	33	735	625	50	3000	16
17	0.0448	0.0453	0.0455*	0.0014	0.0475	32	690	585	54	2925	17
18	0.0399	0.0403	0.0405*	0.0013	0.0424	32	645	550	58	2850	18
19	0.0355	0.0359	0.0361*	0.0012	0.0379	31	600	510	62	2775	19
20	0.0317	0.0320	0.0322*	0.0012	0.0339	30	560	475	66	2700	20
21	0.0282	0.0285	0.0286*	0.0011	0.0303	30	525	445	53	2625	21
22	0.0250	0.0253	0.0254*	0.0011	0.0270	29	490	415	58	2575	22
23	0.0224	0.0226	0.0227*	0.0010	0.0243	29	460	390	62	2500	23
24	0.0199	0.0201	0.0202*	0.0010	0.0217	28	430	365	67	2425	24
25	0.0177	0.0179	0.0180*	0.0009	0.0194	28	400	340	72	2375	25
26	0.0157	0.0159	0.0160*	0.0009	0.0173	27	380	325	76	2300	26
27	0.0141	0.0142	0.0143	0.0008	0.0156	27	355	300	50	2250	27
28	0.0125	0.0126	0.0127	0.0008	0.0140	26	335	285	55	2175	28
29	0.0112	0.0113	0.0114	0.0007	0.0126	26	310	265	61	2150	29
30	0.0099	0.0100	0.0101	0.0007	0.0112	25	295	250	66	2075	30
31	0.0088	0.0089	0.0090	0.0006	0.0100	24	...	...	...	1875	31
32	0.0079	0.0080	0.0081	0.0006	0.0091	24	...	...	...	1675	32
33	0.0070	0.0071	0.0072	0.0005	0.0081	23	...	...	...	1500	33
34	0.0062	0.0063	0.0064	0.0005	0.0072	22	...	...	...	1350	34
35	0.0055	0.0056	0.0057	0.0004	0.0064	21	...	...	...	1200	35
36	0.0049	0.0050	0.0051	0.0004	0.0058	20	...	...	...	1075	36
37	0.0044	0.0045	0.0046	0.0003	0.0052	20	...	...	...	975	37
38	0.0039	0.0040	0.0041	0.0003	0.0047	19	...	...	...	850	38
39	0.0034	0.0035	0.0036	0.0002	0.0041	18	...	...	...	775	39
40	0.0030	0.0031	0.0032	0.0002	0.0037	17	...	...	...	700	40
41	0.0027	0.0028	0.0029	0.0002	0.0033	17	...	...	...	625	41
42	0.0024	0.0025	0.0026	0.0002	0.0030	16	...	...	...	575	42
43	0.0021	0.0022	0.0023	0.0002	0.0026	15	...	...	...	500	43
44	0.0019	0.0020	0.0021	0.0001	0.0024	14	...	...	...	450	44

*This maximum bare wire diameter shall be permitted to be exceeded; see 1.6.7.2.
† For metric equivalent, see Table 1-1.

Copyright National Electrical Manufacturers Association
Provided by IHS under license with NEMA
No reproduction or networking permitted without license from IHS

Not for Resale

MW 80-C (Heavy)
POLYURETHANE OVERCOATED WITH POLYAMIDE, HEAVY FILM INSULATED ROUND COPPER MAGNET WIRE FOR SOLDERABLE APPLICATIONS THERMAL CLASS 155

INSULATING MATERIALS The conductor shall be coated with a dual film. The underlying coating is based on polyurethane resins (1.4.2). The superimposed coating is based on polyamide resins (1.4.2).

THERMAL CLASS 155°C when tested in accordance with Part 1, para. 1.8 and Part 3, para. 3.58.1.

GENERAL REQUIREMENTS See Part 1.

Properties	Test Procedure, See Part 3, Paragraph	Requirements
DIMENSIONS	3.2.1.1	See Table H (MW 80-C)
ADHERENCE AND FLEXIBILITY	3.3.1	No cracks visible in the film coating
ELONGATION	3.4	Not less than value in Table H (MW 80-C)
HEAT SHOCK	3.5	No cracks visible in the film coating after conditioning at 175°C
SPRINGBACK	3.7.1	Not greater than value in Table H (MW 80-C)
DIELECTRIC STRENGTH	3.8.3	Not less than value in Table H (MW 80-C)
CONTINUITY	3.9	The number of discontinuities shall not exceed 5
SOLDERABILITY	3.13	Covered with continuous film of solder after immersion as follows: 14-19 AWG 10 seconds at 430°C 20-23 AWG 8 seconds at 430°C 24-29 AWG 6 seconds at 390°C 30-36 AWG 5 seconds at 390°C 37-44 AWG 4 seconds at 390°C
PERIODIC CONFORMANCE TESTS		
THERMOPLASTIC FLOW	3.50	Median not less than 200°C with heavy film insulated 18 or 36 AWG
SOLUBILITY	3.51	A specimen of heavy film insulated 18 or 36 AWG immersed in xylene shall not soften sufficiently to expose the bare conductor
DIELECTRIC STRENGTH AT RATED TEMPERATURE	3.52	Heavy film insulated wire shall average not less than 3825 volts for 18 AWG or 1725 volts for 36 AWG
SCRAPE RESISTANCE	3.59	Lowest "grams-to-fail" load for any one of the three tests and the average of the three tests shall not be less than the values in Table H (MW 80-C)

Copyright National Electrical Manufacturers Association
Provided by IHS under license with NEMA
No reproduction or networking permitted without license from IHS

Not for Resale

Table H (MW 80-C)
POLYURETHANE OVERCOATED WITH POLYAMIDE, HEAVY FILM INSULATED ROUND COPPER MAGNET WIRE FOR SOLDERABLE APPLICATIONS THERMAL CLASS 155

AWG Size	Bare Wire Diameter, Inches †			Insulation †		Elongation, Minimum	Scrape, Grams to Fail		Springback, Maximum Degrees	Dielectric Strength, Minimum Breakdown	AWG Size
	Minimum	Nominal	Maximum	Minimum Increase in Diameter, Inches	Maximum Overall Diameter, Inches	Percent	Average	Minimum	per Turn	Volts	
14	0.0635	0.0641	0.0644*	0.0032	0.0682	33	1490	1270	42	5700	14
15	0.0565	0.0571	0.0574*	0.0030	0.0609	33	1400	1190	46	5550	15
16	0.0503	0.0508	0.0511*	0.0029	0.0545	33	1310	1115	50	5400	16
17	0.0448	0.0453	0.0455*	0.0028	0.0488	32	1230	1045	54	5275	17
18	0.0399	0.0403	0.0405*	0.0026	0.0437	32	1150	980	58	5125	18
19	0.0355	0.0359	0.0361*	0.0025	0.0391	31	1070	910	62	5000	19
20	0.0317	0.0320	0.0322*	0.0023	0.0351	30	1000	850	66	4850	20
21	0.0282	0.0285	0.0286*	0.0022	0.0314	30	940	800	53	4725	21
22	0.0250	0.0253	0.0254*	0.0021	0.0281	29	880	750	58	4625	22
23	0.0224	0.0226	0.0227*	0.0020	0.0253	29	820	700	62	4500	23
24	0.0199	0.0201	0.0202*	0.0019	0.0227	28	770	655	67	4375	24
25	0.0177	0.0179	0.0180*	0.0018	0.0203	28	720	615	72	4250	25
26	0.0157	0.0159	0.0160*	0.0017	0.0182	27	675	575	76	4150	26
27	0.0141	0.0142	0.0143	0.0016	0.0164	27	635	540	50	4050	27
28	0.0125	0.0126	0.0127	0.0016	0.0147	26	595	510	55	3950	28
29	0.0112	0.0113	0.0114	0.0015	0.0133	26	560	480	61	3825	29
30	0.0099	0.0100	0.0101	0.0014	0.0119	25	525	450	66	3725	30
31	0.0088	0.0089	0.0090	0.0013	0.0108	24	...	...	...	3450	31
32	0.0079	0.0080	0.0081	0.0012	0.0098	24	...	...	...	3175	32
33	0.0070	0.0071	0.0072	0.0011	0.0088	23	...	...	...	2925	33
34	0.0062	0.0063	0.0064	0.0010	0.0078	22	...	...	...	2675	34
35	0.0055	0.0056	0.0057	0.0009	0.0070	21	...	...	...	2475	35
36	0.0049	0.0050	0.0051	0.0008	0.0063	20	...	...	...	2275	36
37	0.0044	0.0045	0.0046	0.0008	0.0057	20	...	...	...	2100	37
38	0.0039	0.0040	0.0041	0.0007	0.0051	19	...	...	...	1925	38
39	0.0034	0.0035	0.0036	0.0006	0.0045	18	...	...	...	1775	39
40	0.0030	0.0031	0.0032	0.0006	0.0040	17	...	...	...	1625	40
41	0.0027	0.0028	0.0029	0.0005	0.0036	17	...	...	...	1500	41
42	0.0024	0.0025	0.0026	0.0004	0.0032	16	...	...	...	1375	42
43	0.0021	0.0022	0.0023	0.0004	0.0029	15	...	...	...	1250	43
44	0.0019	0.0020	0.0021	0.0004	0.0027	14	...	...	...	1175	44

* This maximum bare wire diameter shall be permitted to be exceeded; see 1.6.7.2.
† For metric equivalent, see Table 1-2.

Copyright National Electrical Manufacturers Association
Provided by IHS under license with NEMA
No reproduction or networking permitted without license from IHS

Not for Resale

MW 80-C (Triple)
POLYURETHANE OVERCOATED WITH POLYAMIDE, TRIPLE FILM INSULATED ROUND COPPER MAGNET WIRE FOR SOLDERABLE APPLICATIONS THERMAL CLASS 155

INSULATING MATERIALS The conductor shall be coated with a dual film. The underlying coating is based on polyurethane resins (1.4.2). The superimposed coating is based on polyamide resins (1.4.2).

THERMAL CLASS 155°C when tested in accordance with Part 1, para. 1.8 and Part 3, para. 3.58.1.

GENERAL REQUIREMENTS See Part 1.

Properties	Test Procedure, See Part 3, Paragraph	Requirements
DIMENSIONS	3.2.1.1	See Table T (MW 80-C)
ADHERENCE AND FLEXIBILITY	3.3.1	No cracks visible in the film coating
ELONGATION	3.4	Not less than value in Table T (MW 80-C)
HEAT SHOCK	3.5	No cracks visible in the film coating after conditioning at 175°C
SPRINGBACK	3.7.1	Not greater than value in Table T (MW 80-C)
DIELECTRIC STRENGTH	3.8.3	Not less than value in Table T (MW 80-C)
CONTINUITY	3.9	The number of discontinuities shall not exceed 3
SOLDERABILITY	3.13	Covered with continuous film of solder after immersion as follows: 14-19 AWG 10 seconds at 430°C 20-23 AWG 8 seconds at 430°C 24-29 AWG 6 seconds at 390°C 30-36 AWG 5 seconds at 390°C 37-44 AWG 4 seconds at 390°C
PERIODIC CONFORMANCE TESTS		
THERMOPLASTIC FLOW	3.50	Median not less than 200°C with heavy film insulated 18 AWG
SOLUBILITY	3.51	Two specimens of heavy film insulated 18 AWG immersed in xylene shall not soften sufficiently to expose bare conductor.
DIELECTRIC STRENGTH AT RATED TEMPERATURE	3.52	Heavy film insulated wire shall average not less than 3825 volts for 18 AWG or 1725 volts for 36 AWG
SCRAPE RESISTANCE	3.59	Lowest "grams-to-fail" load for any one of the three tests and the average of the three tests shall not be less than the values in Table T (MW 80-C)

Copyright National Electrical Manufacturers Association
Provided by IHS under license with NEMA
No reproduction or networking permitted without license from IHS

Not for Resale

Table T (MW 80-C)
POLYURETHANE OVERCOATED WITH POLYAMIDE, TRIPLE FILM INSULATED ROUND COPPER MAGNET WIRE FOR SOLDERABLE APPLICATIONS THERMAL CLASS 155

AWG Size	Bare Wire Diameter, Inches†			Insulation†		Elongation,	Scrape, Grams to Fail		Springback,	Dielectric Strength,	AWG
	Minimum	Nominal	Maximum	Minimum Increase in Diameter, Inches	Maximum Overall Diameter, Inches	Minimum Percent	Average	Minimum	Maximum Degrees per Turn	Minimum Breakdown Volts	Size
14	0.0635	0.0641	0.0644*	0.0048	0.0700	33	1735	1475	46	7600	14
15	0.0565	0.0571	0.0574*	0.0045	0.0627	33	1620	1375	49	7400	15
16	0.0503	0.0508	0.0511*	0.0043	0.0562	33	1525	1295	53	7200	16
17	0.0448	0.0453	0.0455*	0.0041	0.0504	32	1425	1210	58	7000	17
18	0.0399	0.0403	0.0405*	0.0039	0.0452	32	1335	1135	62	6825	18
19	0.0355	0.0359	0.0361*	0.0037	0.0406	31	1255	1065	66	6650	19
20	0.0317	0.0320	0.0322*	0.0035	0.0364	30	1180	1000	70	6475	20
21	0.0282	0.0285	0.0286*	0.0033	0.0326	30	1115	945	53	6300	21
22	0.0250	0.0253	0.0254*	0.0032	0.0293	29	1045	890	58	6150	22
23	0.0224	0.0226	0.0227*	0.0030	0.0264	29	975	830	64	6000	23
24	0.0199	0.0201	0.0202*	0.0029	0.0238	28	910	770	69	5850	24
25	0.0177	0.0179	0.0180*	0.0027	0.0214	28	850	720	74	5675	25
26	0.0157	0.0159	0.0160*	0.0026	0.0193	27	795	675	80	5525	26
27	0.0141	0.0142	0.0143	0.0024	0.0173	27	735	625	55	5400	27
28	0.0125	0.0126	0.0127	0.0023	0.0156	26	690	585	60	5250	28
29	0.0112	0.0113	0.0114	0.0022	0.0142	26	645	550	65	5125	29
30	0.0099	0.0100	0.0101	0.0021	0.0128	25	605	515	70	4975	30
31	0.0088	0.0089	0.0090	0.0017	0.0114	24	...	...	...	4125	31
32	0.0079	0.0080	0.0081	0.0016	0.0103	24	...	...	...	3825	32
33	0.0070	0.0071	0.0072	0.0014	0.0092	23	...	...	...	3550	33
34	0.0062	0.0063	0.0064	0.0013	0.0082	22	...	...	...	3300	34
35	0.0055	0.0056	0.0057	0.0012	0.0074	21	...	...	...	3075	35
36	0.0049	0.0050	0.0051	0.0011	0.0067	20	...	...	...	2850	36
37	0.0044	0.0045	0.0046	0.0010	0.0060	20	...	...	...	2650	37
38	0.0039	0.0040	0.0041	0.0009	0.0054	19	...	...	...	2450	38
39	0.0034	0.0035	0.0036	0.0008	0.0048	18	...	...	...	2250	39
40	0.0030	0.0031	0.0032	0.0008	0.0043	17	...	...	...	2100	40
41	0.0027	0.0028	0.0029	0.0007	0.0039	17	...	...	...	1950	41
42	0.0024	0.0025	0.0026	0.0007	0.0035	16	...	...	...	1800	42
43	0.0021	0.0022	0.0023	0.0006	0.0032	15	...	...	...	1675	43
44	0.0019	0.0020	0.0021	0.0006	0.0029	14	...	...	...	1575	44

* This maximum bare wire diameter shall be permitted to be exceeded; see 1.6.7.2.

† For metric equivalent, see Table 1-3.

Copyright National Electrical Manufacturers Association
Provided by IHS under license with NEMA
No reproduction or networking permitted without license from IHS

Not for Resale

6470247 0514986 307

MW 81-C (Single)
POLYAMIDEIMIDE, SINGLE FILM INSULATED ROUND COPPER MAGNET WIRE THERMAL CLASS 220

INSULATING MATERIALS This coating is based on polyamideimide resins (1.4.2).

THERMAL CLASS 220°C when tested in accordance with Part 1, para. 1.8 and Part 3, para. 3.58.1

GENERAL REQUIREMENTS See Part 1.

Properties	Test Procedure, See Part 3, Paragraph	Requirements
DIMENSIONS	3.2.1.1	See Table S (MW 81-C)
ADHERENCE AND FLEXIBILITY	3.3.1	No cracks visible in the film coating
ELONGATION	3.4	Not less than value in Table S (MW 81-C)
HEAT SHOCK	3.5	No cracks visible in the film coating after conditioning at 240°C
SPRINGBACK	3.7.1	Not greater than value in Table S (MW 81-C)
DIELECTRIC STRENGTH	3.8.3	Not less than value in Table S (MW 81-C)
CONTINUITY	3.9	The number of discontinuities shall not exceed 15
PERIODIC CONFORMANCE TESTS		
THERMOPLASTIC FLOW	3.50	Median not less than 350°C with heavy film insulated 18 or 36 AWG
SOLUBILITY	3.51	Two specimens of heavy film insulated 18 or 36 AWG immersed in xylene and 50/50 xylene/butyl Cellosolve shall not soften sufficiently to expose the bare conductor
DIELECTRIC STRENGTH AT RATED TEMPERATURE	3.52	Heavy film insulated wire shall average not less than 4275 volts for 18 AWG or 1900 volts for 36 AWG
SCRAPE RESISTANCE	3.59	Lowest "grams-to-fail" load for any one of the three tests and the average of the three tests shall not be less than the values in Table S (MW 81-C)

Copyright National Electrical Manufacturers Association
Provided by IHS under license with NEMA
No reproduction or networking permitted without license from IHS

Not for Resale

Table S (MW 81-C)
POLYAMIDEIMIDE, SINGLE FILM INSULATED ROUND COPPER MAGNET WIRE
THERMAL CLASS 220

AWG Size	Bare Wire Diameter, Inches †			Insulation †		Elongation, Minimum Percent	Scrape, Grams to Fail		Springback, Maximum Degrees per Turn	Dielectric Strength, Minimum Breakdown Volts	AWG Size
	Minimum	Nominal	Maximum	Minimum Increase in Diameter, Inches	Maximum Overall Diameter, Inches		Average	Minimum			
14	0.0635	0.0641	0.0644*	0.0016	0.0666	33	840	715	42	3525	14
15	0.0565	0.0571	0.0574*	0.0015	0.0594	33	780	665	46	3425	15
16	0.0503	0.0508	0.0511*	0.0014	0.0531	33	735	625	50	3325	16
17	0.0448	0.0453	0.0455*	0.0014	0.0475	32	690	585	54	3250	17
18	0.0399	0.0403	0.0405*	0.0013	0.0424	32	645	550	58	3175	18
19	0.0355	0.0359	0.0361*	0.0012	0.0379	31	600	510	62	3075	19
20	0.0317	0.0320	0.0322*	0.0012	0.0339	30	560	475	66	3000	20
21	0.0282	0.0285	0.0286*	0.0011	0.0303	30	525	445	53	2925	21
22	0.0250	0.0253	0.0254*	0.0011	0.0270	29	490	415	58	2850	22
23	0.0224	0.0226	0.0227*	0.0010	0.0243	29	460	390	62	2775	23
24	0.0199	0.0201	0.0202*	0.0010	0.0217	28	430	365	67	2700	24
25	0.0177	0.0179	0.0180*	0.0009	0.0194	28	400	340	72	2625	25
26	0.0157	0.0159	0.0160*	0.0009	0.0173	27	380	325	76	2550	26
27	0.0141	0.0142	0.0143	0.0008	0.0156	27	355	300	50	2500	27
28	0.0125	0.0126	0.0127	0.0008	0.0140	26	335	285	55	2425	28
29	0.0112	0.0113	0.0114	0.0007	0.0126	26	310	265	61	2375	29
30	0.0099	0.0100	0.0101	0.0007	0.0112	25	295	250	66	2300	30
31	0.0088	0.0089	0.0090	0.0006	0.0100	24	...	...	...	2075	31
32	0.0079	0.0080	0.0081	0.0006	0.0091	24	...	...	...	1850	32
33	0.0070	0.0071	0.0072	0.0005	0.0081	23	...	...	...	1675	33
34	0.0062	0.0063	0.0064	0.0005	0.0072	22	...	...	...	1500	34
35	0.0055	0.0056	0.0057	0.0004	0.0064	21	...	...	...	1325	35
36	0.0049	0.0050	0.0051	0.0004	0.0058	20	...	...	...	1200	36
37	0.0044	0.0045	0.0046	0.0003	0.0052	20	...	...	...	1075	37
38	0.0039	0.0040	0.0041	0.0003	0.0047	19	...	...	...	950	38
39	0.0034	0.0035	0.0036	0.0002	0.0041	18	...	...	...	850	39
40	0.0030	0.0031	0.0032	0.0002	0.0037	17	...	...	...	775	40
41	0.0027	0.0028	0.0029	0.0002	0.0033	17	...	...	...	700	41
42	0.0024	0.0025	0.0026	0.0002	0.0030	16	...	...	...	625	42
43	0.0021	0.0022	0.0023	0.0002	0.0026	15	...	...	...	550	43
44	0.0019	0.0020	0.0021	0.0001	0.0024	14	...	...	...	500	44

*This maximum bare wire diameter shall be permitted to be exceeded; see 1.6.7.2.
† For metric equivalent, see Table 1-1.

Copyright National Electrical Manufacturers Association
Provided by IHS under license with NEMA
No reproduction or networking permitted without license from IHS

Not for Resale

MW 81-C (Heavy)
POLYAMIDEIMIDE, HEAVY FILM INSULATED ROUND COPPER MAGNET WIRE
THERMAL CLASS 220

INSULATING MATERIALS This coating is based on polyamideimide resins (1.4.2).

THERMAL CLASS 220°C when tested in accordance with Part 1, para. 1.8 and Part 3, para. 3.58.1.

GENERAL REQUIREMENTS See Part 1.

Properties	Test Procedure, See Part 3, Paragraph	Requirements
DIMENSIONS	3.2.1.1	See Table H (MW 81-C)
ADHERENCE AND FLEXIBILITY	3.3.1	No cracks visible in the film coating
ELONGATION	3.4	Not less than value in Table H (MW 81-C)
HEAT SHOCK	3.5	No cracks visible in the film coating after conditioning at 240°C
SPRINGBACK	3.7.1 3.7.2	14-30 AWG—not greater than value in Table H (MW 81-C) 4-13 AWG—not greater than 5°
DIELECTRIC STRENGTH	3.8.2 3.8.3	4-9 AWG—not less than value in Table H (MW 81-C) 10-44 AWG—not less than value in Table H (MW 81-C)
CONTINUITY	3.9.2	14-44 AWG—the number of discontinuities shall not exceed 5
PERIODIC CONFORMANCE TESTS		
THERMOPLASTIC FLOW	3.50	Median not less than 350°C with heavy film insulated 18 or 36 AWG
SOLUBILITY	3.51	Two specimens of heavy film insulated 18 or 36 AWG immersed in xylene and 50/50 xylene/butyl Cellosolve shall not soften sufficiently to expose the bare conductor
DIELECTRIC STRENGTH AT RATED TEMPERATURE	3.52	Heavy film insulated wire shall average not less than 4275 volts for 18 AWG or 1900 volts for 36 AWG
SCRAPE RESISTANCE	3.59	Lowest "grams-to-fail" load for any one of the three tests and the average of the three tests shall not be less than the values in Table H (MW 81-C)

Copyright National Electrical Manufacturers Association
Provided by IHS under license with NEMA
No reproduction or networking permitted without license from IHS

Not for Resale

Table H (MW 81-C)
POLYAMIDEIMIDE, HEAVY FILM INSULATED ROUND COPPER MAGNET WIRE
THERMAL CLASS 220

AWG Size	Bare Wire Diameter, Inches †			Insulation †		Elongation, Minimum	Scrape, Grams to Fail		Springback, Maximum Degrees	Dielectric Strength, Minimum Breakdown	AWG Size
	Minimum	Nominal	Maximum	Minimum Increase in Diameter, Inches	Maximum Overall Diameter, Inches	Percent	Average	Minimum	per Turn	Volts	
4	0.2023	0.2043	0.2053*	0.0037	0.2098	38	...	...	...	3700	4
5	0.1801	0.1819	0.1828*	0.0036	0.1872	37	...	...	...	3600	5
6	0.1604	0.1620	0.1628*	0.0035	0.1671	37	...	...	...	3500	6
7	0.1429	0.1443	0.1450*	0.0034	0.1491	36	...	...	...	3400	7
8	0.1272	0.1285	0.1292*	0.0033	0.1332	36	...	...	...	3300	8
9	0.1133	0.1144	0.1150*	0.0032	0.1189	36	...	...	...	3200	9
10	0.1009	0.1019	0.1024*	0.0031	0.1061	35	1490	1270	...	6200	10
11	0.0898	0.0907	0.0912*	0.0030	0.0948	35	1490	1270	...	6000	11
12	0.0800	0.0808	0.0812*	0.0029	0.0847	34	1490	1270	...	5800	12
13	0.0713	0.0720	0.0724*	0.0028	0.0757	34	1490	1270	...	5600	13
14	0.0635	0.0641	0.0644*	0.0032	0.0682	33	1490	1270	42	6325	14
15	0.0565	0.0571	0.0574*	0.0030	0.0609	33	1490	1190	46	6175	15
16	0.0503	0.0508	0.0511*	0.0029	0.0545	33	1310	1115	50	6000	16
17	0.0448	0.0453	0.0455*	0.0028	0.0488	32	1230	1045	54	5850	17
18	0.0399	0.0403	0.0405*	0.0026	0.0437	32	1150	980	58	5700	18
19	0.0355	0.0359	0.0361*	0.0025	0.0391	31	1070	910	62	5550	19
20	0.0317	0.0320	0.0322*	0.0023	0.0351	30	1000	850	66	5400	20
21	0.0282	0.0285	0.0286*	0.0022	0.0314	30	940	800	53	5250	21
22	0.0250	0.0253	0.0254*	0.0021	0.0281	29	880	750	58	5125	22
23	0.0224	0.0226	0.0227*	0.0020	0.0253	29	820	700	62	5000	23
24	0.0199	0.0201	0.0202*	0.0019	0.0227	28	770	655	67	4850	24
25	0.0177	0.0179	0.0180*	0.0018	0.0203	28	720	615	72	4725	25
26	0.0157	0.0159	0.0160*	0.0017	0.0182	27	675	575	76	4600	26
27	0.0141	0.0142	0.0143	0.0016	0.0164	27	635	540	50	4500	27
28	0.0125	0.0126	0.0127	0.0016	0.0147	26	595	510	55	4375	28
29	0.0112	0.0113	0.0114	0.0015	0.0133	26	560	480	61	4250	29
30	0.0099	0.0100	0.0101	0.0014	0.0119	25	525	450	66	4150	30
31	0.0088	0.0089	0.0090	0.0013	0.0108	24	...	...	...	3825	31
32	0.0079	0.0080	0.0081	0.0012	0.0098	24	...	...	...	3525	32
33	0.0070	0.0071	0.0072	0.0011	0.0088	23	...	...	...	3250	33
34	0.0062	0.0063	0.0064	0.0010	0.0078	22	...	...	...	2975	34
35	0.0055	0.0056	0.0057	0.0009	0.0070	21	...	...	...	2750	35
36	0.0049	0.0050	0.0051	0.0008	0.0063	20	...	...	...	2525	36
37	0.0044	0.0045	0.0046	0.0008	0.0057	20	...	...	...	2325	37
38	0.0039	0.0040	0.0041	0.0007	0.0051	19	...	...	...	2150	38
39	0.0034	0.0035	0.0036	0.0006	0.0045	18	...	...	...	1975	39
40	0.0030	0.0031	0.0032	0.0006	0.0040	17	...	...	...	1800	40
41	0.0027	0.0028	0.0029	0.0005	0.0036	17	...	...	...	1675	41
42	0.0024	0.0025	0.0026	0.0004	0.0032	16	...	...	...	1525	42
43	0.0021	0.0022	0.0023	0.0004	0.0029	15	...	...	...	1400	43
44	0.0019	0.0020	0.0021	0.0004	0.0027	14	...	...	...	1300	44

* This maximum bare wire diameter shall be permitted to be exceeded; see 1.6.7.2.

† For metric equivalent, see Table 1-2.

Copyright National Electrical Manufacturers Association
Provided by IHS under license with NEMA
No reproduction or networking permitted without license from IHS

Not for Resale

MW 82-C (Single)
POLYURETHANE, SINGLE FILM INSULATED ROUND COPPER MAGNET WIRE FOR SOLDERABLE APPLICATIONS THERMAL CLASS 180

INSULATING MATERIALS The coating is based on polyurethane resins (1.4.2).

THERMAL CLASS 180°C when tested in accordance with Part 1, para. 1.8 and Part 3, para. 3.58.1.

GENERAL REQUIREMENTS See Part 1.

Properties	Test Procedure, See Part 3, Paragraph	Requirements
DIMENSIONS	3.2.1.1	See Table S (MW 82-C)
ADHERENCE AND FLEXIBILITY	3.3.1	No cracks visible in the film coating
ELONGATION	3.4	Not less than value in Table S (MW 82-C)
HEAT SHOCK	3.5	No cracks visible in the film coating after conditioning at 200°C
SPRINGBACK	3.7.1	Not greater than value in Table S (MW 82-C)
DIELECTRIC STRENGTH	3.8.3	Not less than value in Table S (MW 82-C)
CONTINUITY	3.9.2 3.9.3	25-44 AWG—the number of discontinuities shall not exceed 15 45-56 AWG—the number of discontinuities shall not exceed 25
SOLDERABILITY	3.13	Covered with continuous film of solder after immersion times not to exceed the following at the specified temperatures: 25-29 AWG 6 seconds at 390°C 30-36 AWG 5 seconds at 390°C 37-46 AWG 4 seconds at 390°C 47-56 AWG 3 seconds at 360°C
PERIODIC CONFORMANCE TESTS		
THERMOPLASTIC FLOW	3.50	Median not less than 225°C with heavy film insulated 36 AWG
SOLUBILITY	3.51	A specimen of heavy film insulated 36 AWG immersed in xylene shall not soften sufficiently to expose the bare conductor
DIELECTRIC STRENGTH AT RATED TEMPERATURE	3.52	Average not less than 1900 volts with heavy film insulated 36 AWG
SCRAPE RESISTANCE	3.59	Lowest "grams-to-fail" load for any one of the three tests and the average of the three tests shall not be less than the values in Table S (MW 82-C)

Copyright National Electrical Manufacturers Association
Provided by IHS under license with NEMA
No reproduction or networking permitted without license from IHS

Not for Resale

Table S (MW 82-C)
POLYURETHANE, SINGLE FILM INSULATED ROUND COPPER MAGNET WIRE FOR SOLDERABLE APPLICATIONS THERMAL CLASS 180

AWG Size	Bare Wire Diameter, Inches †			Insulation †		Elongation, Minimum Percent	Scrape, Grams to Fail		Springback, Maximum Degrees per Turn	Dielectric Strength, Minimum Breakdown, Volts	AWG Size
	Minimum	Nominal	Maximum	Minimum Increase in Diameter, Inches	Maximum Overall Diameter, Inches		Average	Minimum			
25	0.0177	0.0179	0.0180*	0.0009	0.0194	28	350	300	72	2625	25
26	0.0157	0.0159	0.0160*	0.0009	0.0173	27	330	280	76	2550	26
27	0.0141	0.0142	0.0143	0.0008	0.0156	27	310	265	50	2500	27
28	0.0125	0.0126	0.0127	0.0008	0.0140	26	290	250	55	2425	28
29	0.0112	0.0113	0.0114	0.0007	0.0126	26	270	230	61	2375	29
30	0.0099	0.0100	0.0101	0.0007	0.0112	25	255	220	66	2300	30
31	0.0088	0.0089	0.0090	0.0006	0.0100	24	...	...	...	2075	31
32	0.0079	0.0080	0.0081	0.0006	0.0091	24	...	...	...	1850	32
33	0.0070	0.0071	0.0072	0.0005	0.0081	23	...	...	...	1675	33
34	0.0062	0.0063	0.0064	0.0005	0.0072	22	...	...	...	1500	34
35	0.0055	0.0056	0.0057	0.0004	0.0064	21	...	...	...	1325	35
36	0.0049	0.0050	0.0051	0.0004	0.0058	20	...	...	...	1200	36
37	0.0044	0.0045	0.0046	0.0003	0.0052	20	...	...	...	1075	37
38	0.0039	0.0040	0.0041	0.0003	0.0047	19	...	...	...	950	38
39	0.0034	0.0035	0.0036	0.0002	0.0041	18	...	...	...	850	39
40	0.0030	0.0031	0.0032	0.0002	0.0037	17	...	...	...	775	40
41	0.0027	0.0028	0.0029	0.0002	0.0033	17	...	...	...	700	41
42	0.0024	0.0025	0.0026	0.0002	0.0030	16	...	...	...	625	42
43	0.0021	0.0022	0.0023	0.0002	0.0026	15	...	...	...	550	43
44	0.0019	0.0020	0.0021	0.0001	0.0024	14	...	...	...	500	44
	Conductor Resistance at 20°C Ohms per Foot †, ††						Theoretical Nominal Bare Wire Diameter Inches †, ††				
	Minimum	Nominal	Maximum								
45	3.080	3.348	3.616	0.00010	0.00205	11	0.00170				45
46	3.870	4.207	4.544	0.00010	0.00185	10	0.00157				46
47	4.868	5.291	5.714	0.00010	0.00170	8	0.00140				47
48	6.205	6.745	7.285	0.00010	0.00150	7	0.00124				48
49	7.744	8.417	9.090	0.00010	0.00130	6	0.00111				49
50	9.734	10.58	11.43	0.00010	0.00120	5	0.00099				50
51	12.32	13.39	14.46	0.00010	0.00110	...	0.00088				51
52	15.69	17.05	18.41	0.00010	0.00100	...	0.00078				52
53	19.48	21.17	22.86	0.00005	0.00085	...	0.00070				53
54	24.82	26.98	29.14	0.00005	0.00075	...	0.00062				54
55	31.54	34.28	37.02	0.00005	0.00070	...	0.00055				55
56	39.73	43.19	46.65	0.00005	0.00065	...	0.00049				56

* This maximum bare wire diameter shall be permitted to be exceeded; see 1.6.7.2.

† For metric equivalent, see Table 1-1.

†† Conductor size tolerance based on resistance; see 1.6.7.3.

Copyright National Electrical Manufacturers Association
Provided by IHS under license with NEMA
No reproduction or networking permitted without license from IHS

Not for Resale

6470247 0514992 600

MW 82-C (Heavy)
POLYURETHANE, HEAVY FILM INSULATED ROUND COPPER MAGNET WIRE FOR SOLDERABLE APPLICATIONS THERMAL CLASS 180

INSULATING MATERIALS The coating is based on polyurethane resins (1.4.2).

THERMAL CLASS 180°C when tested in accordance with Part 1, para. 1.8 and Part 3, para. 3.58.1.

GENERAL REQUIREMENTS See Part 1.

Properties	Test Procedure, See Part 3, Paragraph	Requirements
DIMENSIONS	3.2.1.1	See Table H (MW 82-C)
ADHERENCE AND FLEXIBILITY	3.3.1	No cracks visible in the film coating
ELONGATION	3.4	Not less than value in Table H (MW 82-C)
HEAT SHOCK	3.5	No cracks visible in the film coating after conditioning at 200°C
SPRINGBACK	3.7.1	Not greater than value in Table H (MW 82-C)
DIELECTRIC STRENGTH	3.8.3	Not less than value in Table H (MW 82-C)
CONTINUITY	3.9.2 3.9.3	25-44 AWG—the number of discontinuities shall not exceed 5 45-56 AWG—the number of discontinuities shall not exceed 10
SOLDERABILITY	3.13	Covered with continuous film of solder after immersion times not to exceed the following at the specified temperatures: 25-29 AWG 6 seconds at 390°C 30-36 AWG 5 seconds at 390°C 37-46 AWG 4 seconds at 390°C 47-50 AWG 3 seconds at 360°C
PERIODIC CONFORMANCE TESTS		
THERMOPLASTIC FLOW	3.50	Median not less than 225°C with heavy film insulated 36 AWG
SOLUBILITY	3.51	A specimen of heavy film insulated 36 AWG immersed in xylene shall not soften sufficiently to expose the bare conductor
DIELECTRIC STRENGTH AT RATED TEMPERATURE	3.52	Average not less than 1900 volts with heavy film insulated 36 AWG
SCRAPE RESISTANCE	3.59	Lowest "grams-to-fail" load for any one of the three tests and the average of the three tests shall not be less than the values in Table H (MW 82-C)

Copyright National Electrical Manufacturers Association
Provided by IHS under license with NEMA
No reproduction or networking permitted without license from IHS
Not for Resale

Table H (MW 82-C)
POLYURETHANE, HEAVY FILM INSULATED ROUND COPPER MAGNET WIRE FOR SOLDERABLE APPLICATIONS THERMAL CLASS 180

AWG Size	Bare Wire Diameter, Inches †			Insulation †		Elongation, Minimum Percent	Scrape, Grams to Fail		Springback, Maximum Degrees per Turn	Dielectric Strength, Minimum Breakdown Volts	AWG Size
	Minimum	Nominal	Maximum	Minimum Increase in Diameter, Inches	Maximum Overall Diameter, Inches		Average	Minimum			
25	0.0177	0.0179	0.0180*	0.0018	0.0203	28	720	615	72	4725	25
26	0.0157	0.0159	0.0160*	0.0017	0.0182	27	675	575	76	4600	26
27	0.0141	0.0142	0.0143	0.0016	0.0164	27	635	540	50	4500	27
28	0.0125	0.0126	0.0127	0.0016	0.0147	26	595	510	55	4375	28
29	0.0112	0.0113	0.0114	0.0015	0.0133	26	560	480	61	4250	29
30	0.0099	0.0100	0.0101	0.0014	0.0119	25	525	450	66	4150	30
31	0.0088	0.0089	0.0090	0.0013	0.0108	24	...	...	...	3825	31
32	0.0079	0.0080	0.0081	0.0012	0.0098	24	...	...	...	3525	32
33	0.0070	0.0071	0.0072	0.0011	0.0088	23	...	...	...	3250	33
34	0.0062	0.0063	0.0064	0.0010	0.0078	22	...	...	...	2975	34
35	0.0055	0.0056	0.0057	0.0009	0.0070	21	...	...	...	2750	35
36	0.0049	0.0050	0.0051	0.0008	0.0063	20	...	...	...	2525	36
37	0.0044	0.0045	0.0046	0.0008	0.0057	20	...	...	...	2325	37
38	0.0039	0.0040	0.0041	0.0007	0.0051	19	...	...	...	2150	38
39	0.0034	0.0035	0.0036	0.0006	0.0045	18	...	...	...	1975	39
40	0.0030	0.0031	0.0032	0.0006	0.0040	17	...	...	...	1800	40
41	0.0027	0.0028	0.0029	0.0005	0.0036	17	...	...	...	1675	41
42	0.0024	0.0025	0.0026	0.0004	0.0032	16	...	...	...	1525	42
43	0.0021	0.0022	0.0023	0.0004	0.0029	15	...	...	...	1400	43
44	0.0019	0.0020	0.0021	0.0004	0.0027	14	...	...	...	1300	44
	Conductor Resistance at 20°C Ohms per Foot †, ††						Theoretical Nominal Bare Wire Diameter, Inches †, ††				
	Minimum	Nominal	Maximum								
45	3.080	3.348	3.616	0.00030	0.00230	11	0.00176				45
46	3.870	4.207	4.544	0.00030	0.00210	10	0.00157				46
47	4.808	5.291	5.714	0.00030	0.00190	8	0.00140				47
48	6.205	6.745	7.285	0.00020	0.00170	7	0.00124				48
49	7.744	8.417	9.090	0.00020	0.00150	6	0.00111				49
50	9.734	10.58	11.43	0.00020	0.00140	5	0.00099				50

* This maximum bare wire diameter shall be permitted to be exceeded; see 1.6.7.2.

† For metric equivalent, see Table 1-2.

†† Conductor size tolerance based on resistance; see 1.6.7.3.

Copyright National Electrical Manufacturers Association
Provided by IHS under license with NEMA
No reproduction or networking permitted without license from IHS

Not for Resale

MW 82-C (Triple)
POLYURETHANE, TRIPLE FILM INSULATED ROUND COPPER MAGNET WIRE FOR SOLDERABLE APPLICATIONS THERMAL CLASS 180

INSULATING MATERIALS The coating is based on polyurethane resins (1.4.2).

THERMAL CLASS 180°C when tested in accordance with Part 1, para. 1.8 and Part 3, para. 3.58.1.

GENERAL REQUIREMENTS See Part 1.

Properties	Test Procedure, See Part 3, Paragraph	Requirements
DIMENSIONS	3.2.1.1	See Table T (MW 82-C)
ADHERENCE AND FLEXIBILITY	3.3.1	No cracks visible in the film coating
ELONGATION	3.4	Not less than value in Table T (MW 82-C)
HEAT SHOCK	3.5	No cracks visible in the film coating after conditioning at 200°C
SPRINGBACK	3.7.1	Not greater than value in Table H (MW 82-C)
DIELECTRIC STRENGTH	3.8.3	Not less than value in Table T (MW 82-C)
CONTINUITY	3.9.2	The number of discontinuities shall not exceed 3
SOLDERABILITY	3.13	Covered with continuous film of solder after immersion times not to exceed the following at the specified temperatures: 30-36 AWG 5 seconds at 390°C 37-44 AWG 4 seconds at 390°C
PERIODIC CONFORMANCE TESTS		
THERMOPLASTIC FLOW	3.50	Median not less than 225°C with heavy film insulated 36 AWG
SOLUBILITY	3.51	A specimen of heavy film insulated 36 AWG immersed in xylene shall not soften sufficiently to expose the bare conductor
DIELECTRIC STRENGTH AT RATED TEMPERATURE	3.52	Average not less than 1900 volts with heavy film insulated 36 AWG
SCRAPE RESISTANCE	3.59	Lowest "grams-to-fail" load for any one of the three tests and the average of the three tests shall not be less than the values in Table T (MW 82-C)

Copyright National Electrical Manufacturers Association
Provided by IHS under license with NEMA
No reproduction or networking permitted without license from IHS

Not for Resale

Table T (MW 82-C)
POLYURETHANE, TRIPLE FILM INSULATED ROUND COPPER MAGNET WIRE FOR SOLDERABLE APPLICATIONS THERMAL CLASS 180

AWG Size	Bare Wire Diameter, Inches †			Insulation †		Elongation, Minimum Percent	Scrape, Grams to Fail		Springback, Maximum Degrees per Turn	Dielectric Strength, Minimum Breakdown Volts	AWG Size
	Minimum	Nominal	Maximum	Minimum Increase in Diameter, Inches	Maximum Overall Diameter, Inches		Average	Minimum			
30	0.0099	0.0100	0.0101	0.0021	0.0128	25	605	515	70	5550	30
31	0.0088	0.0089	0.0090	0.0017	0.0114	24	...	...	...	4600	31
32	0.0079	0.0080	0.0081	0.0016	0.0103	24	...	...	...	4275	32
33	0.0070	0.0071	0.0072	0.0014	0.0092	23	...	...	...	3950	33
34	0.0062	0.0063	0.0064	0.0013	0.0082	22	...	...	...	3675	34
35	0.0055	0.0056	0.0057	0.0012	0.0074	21	...	...	...	3425	35
36	0.0049	0.0050	0.0051	0.0011	0.0067	20	...	...	...	3175	36
37	0.0044	0.0045	0.0046	0.0010	0.0060	20	...	...	...	2950	37
38	0.0039	0.0040	0.0041	0.0009	0.0054	19	...	...	...	2725	38
39	0.0034	0.0035	0.0036	0.0008	0.0048	18	...	...	...	2525	39
40	0.0030	0.0031	0.0032	0.0008	0.0043	17	...	...	...	2350	40
41	0.0027	0.0028	0.0029	0.0007	0.0039	17	...	...	...	2175	41
42	0.0024	0.0025	0.0026	0.0007	0.0035	16	...	...	...	2025	42
43	0.0021	0.0022	0.0023	0.0006	0.0032	15	...	...	...	1875	43
44	0.0019	0.0020	0.0021	0.0006	0.0029	14	...	...	...	1750	44

† For metric equivalent, see Table 1-3.

Copyright National Electrical Manufacturers Association
Provided by IHS under license with NEMA
No reproduction or networking permitted without license from IHS

Not for Resale

MW 83-C (Single)
POLYURETHANE OVERCOATED WITH POLYAMIDE, SINGLE FILM INSULATED ROUND COPPER MAGNET WIRE FOR SOLDERABLE APPLICATIONS THERMAL CLASS 180

INSULATING MATERIALS The conductor shall be coated with a dual film. The underlying insulation is based on polyurethane resins (1.4.2). The superimposed coating is based on polyamide resins (1.4.2).

THERMAL CLASS 180°C when tested in accordance with Part 1, para. 1.8 and Part 3, para. 3.58.1.

GENERAL REQUIREMENTS See Part 1.

Properties	Test Procedure, See Part 3, Paragraph	Requirements
DIMENSIONS	3.2.1.1	See Table S (MW 83-C)
ADHERENCE AND FLEXIBILITY	3.3.1	No cracks visible in the film coating
ELONGATION	3.4	Not less than value in Table S (MW 83-C)
HEAT SHOCK	3.5	No cracks visible in the film coating after conditioning at 200°C
SPRINGBACK	3.7.1	Not greater than value in Table S (MW 83-C)
DIELECTRIC STRENGTH	3.8.3	Not less than value in Table S (MW 83-C)
CONTINUITY	3.9.2	The number of discontinuities shall not exceed 15
SOLDERABILITY	3.13	Covered with continuous film of solder after immersion times not to exceed the following at the specified temperatures: 14-19 AWG 10 seconds at 430°C 20-23 AWG 8 seconds at 430°C 24-29 AWG 6 seconds at 390°C 30-36 AWG 5 seconds at 390°C 37-44 AWG 4 seconds at 390°C
PERIODIC CONFORMANCE TESTS		
THERMOPLASTIC FLOW	3.50	Median not less than 225°C with heavy film insulated 18 or 36 AWG
SOLUBILITY	3.51	A specimen of heavy film insulated 18 or 36 AWG immersed in xylene shall not soften sufficiently to expose the bare conductor
DIELECTRIC STRENGTH AT RATED TEMPERATURE	3.52	Heavy film insulated wire shall average not less than 3825 volts for 18 AWG or 1725 volts for 36 AWG
SCRAPE RESISTANCE	3.59	Lowest "grams-to-fail" load for any one of the three tests and the average of the three tests shall not be less than the values in Table S (MW 83-C)

Copyright National Electrical Manufacturers Association
Provided by IHS under license with NEMA
No reproduction or networking permitted without license from IHS

Not for Resale

Table S (MW 83-C)
POLYURETHANE OVERCOATED WITH POLYAMIDE, SINGLE FILM INSULATED ROUND COPPER MAGNET WIRE FOR SOLDERABLE APPLICATIONS THERMAL CLASS 180

AWG Size	Bare Wire Diameter, Inches †			Insulation †		Elongation, Minimum Percent	Scrape, Grams to Fail		Springback, Maximum Degrees per Turn	Dielectric Strength, Minimum Breakdown Volts	AWG Size
	Minimum	Nominal	Maximum	Minimum Increase in Diameter, Inches	Maximum Overall Diameter, Inches		Average	Minimum			
14	0.0635	0.0641	0.0644*	0.0016	0.0666	33	840	715	42	3175	14
15	0.0565	0.0571	0.0574*	0.0015	0.0594	33	780	665	46	3075	15
16	0.0503	0.0508	0.0511*	0.0014	0.0531	33	735	625	50	3000	16
17	0.0448	0.0453	0.0455*	0.0014	0.0475	32	690	585	54	2925	17
18	0.0399	0.0403	0.0405*	0.0013	0.0424	32	645	550	58	2850	18
19	0.0355	0.0359	0.0361*	0.0012	0.0379	31	600	510	62	2775	19
20	0.0317	0.0320	0.0322*	0.0012	0.0339	30	560	475	66	2700	20
21	0.0282	0.0285	0.0286*	0.0011	0.0303	30	525	445	53	2625	21
22	0.0250	0.0253	0.0254*	0.0011	0.0270	29	490	415	58	2575	22
23	0.0224	0.0226	0.0227*	0.0010	0.0243	29	460	390	62	2500	23
24	0.0199	0.0201	0.0202*	0.0010	0.0217	28	430	365	67	2425	24
25	0.0177	0.0179	0.0180*	0.0009	0.0194	28	400	340	72	2375	25
26	0.0157	0.0159	0.0160*	0.0009	0.0173	27	380	325	76	2300	26
27	0.0141	0.0142	0.0143	0.0008	0.0156	27	355	300	50	2250	27
28	0.0125	0.0126	0.0127	0.0008	0.0140	26	335	285	55	2175	28
29	0.0112	0.0113	0.0114	0.0007	0.0126	26	310	265	61	2150	29
30	0.0099	0.0100	0.0101	0.0007	0.0112	25	295	250	66	2075	30
31	0.0088	0.0089	0.0090	0.0006	0.0100	24	...	...	...	1875	31
32	0.0079	0.0080	0.0081	0.0006	0.0091	24	...	...	...	1675	32
33	0.0070	0.0071	0.0072	0.0005	0.0081	23	...	...	...	1500	33
34	0.0062	0.0063	0.0064	0.0005	0.0072	22	...	...	...	1350	34
35	0.0055	0.0056	0.0057	0.0004	0.0064	21	...	...	...	1200	35
36	0.0049	0.0050	0.0051	0.0004	0.0058	20	...	...	...	1075	36
37	0.0044	0.0045	0.0046	0.0003	0.0052	20	...	...	...	975	37
38	0.0039	0.0040	0.0041	0.0003	0.0047	19	...	...	...	850	38
39	0.0034	0.0035	0.0036	0.0002	0.0041	18	...	...	...	775	39
40	0.0030	0.0031	0.0032	0.0002	0.0037	17	...	...	...	700	40
41	0.0027	0.0028	0.0029	0.0002	0.0033	17	...	...	...	625	41
42	0.0024	0.0025	0.0026	0.0002	0.0030	16	...	...	...	575	42
43	0.0021	0.0022	0.0023	0.0002	0.0026	15	...	...	...	500	43
44	0.0019	0.0020	0.0021	0.0001	0.0024	14	...	...	...	450	44

*This maximum bare wire diameter shall be permitted to be exceeded; see 1.6.7.2.
† For metric equivalent, see Table 1-1.

Copyright National Electrical Manufacturers Association
Provided by IHS under license with NEMA
No reproduction or networking permitted without license from IHS

Not for Resale

6470247 0514998 029

MW 83-C (Heavy)
POLYURETHANE OVERCOATED WITH POLYAMIDE, HEAVY FILM INSULATED ROUND COPPER MAGNET WIRE FOR SOLDERABLE APPLICATIONS THERMAL CLASS 180

INSULATING MATERIALS The conductor shall be coated with a dual film. The underlying coating is based on polyurethane resins (1.4.2). The superimposed coating is based on polyamide resins (1.4.2).

THERMAL CLASS 180°C when tested in accordance with Part 1, para. 1.8 and Part 3, para. 3.58.1.

GENERAL REQUIREMENTS See Part 1.

Properties	Test Procedure, See Part 3, Paragraph	Requirements
DIMENSIONS	3.2.1.1	See Table H (MW 83-C)
ADHERENCE AND FLEXIBILITY	3.3.1	No cracks visible in the film coating
ELONGATION	3.4	Not less than value in Table H (MW 83-C)
HEAT SHOCK	3.5	No cracks visible in the film coating after conditioning at 200°C
SPRINGBACK	3.7.1	Not greater than value in Table H (MW 83-C)
DIELECTRIC STRENGTH	3.8.3	Not less than value in Table H (MW 83-C)
CONTINUITY	3.9.2	The number of discontinuities shall not exceed 5
SOLDERABILITY	3.13	Covered with continuous film of solder after immersion times not to exceed the following at the specified temperatures: 14-19 AWG 10 seconds at 430°C 20-23 AWG 8 seconds at 430°C 24-29 AWG 6 seconds at 390°C 30-36 AWG 5 seconds at 390°C 37-44 AWG 4 seconds at 390°C
PERIODIC CONFORMANCE TESTS		
THERMOPLASTIC FLOW	3.50	Median not less than 225°C with heavy film insulated 18 or 36 AWG
SOLUBILITY	3.51	A specimen of heavy film insulated 18 or 36 AWG immersed in xylene shall not soften sufficiently to expose the bare conductor
DIELECTRIC STRENGTH AT RATED TEMPERATURE	3.52	Heavy film insulated wire shall average not less than 3825 volts for 18 AWG or 1725 volts for 36 AWG
SCRAPE RESISTANCE	3.59	Lowest "grams-to-fail" load for any one of the three tests and the average of the three tests shall not be less than the values in Table H (MW 83-C)

Copyright National Electrical Manufacturers Association
Provided by IHS under license with NEMA
No reproduction or networking permitted without license from IHS
Not for Resale

Table H (MW 83-C)
POLYURETHANE OVERCOATED WITH POLYAMIDE, HEAVY FILM INSULATED ROUND COPPER MAGNET WIRE FOR SOLDERABLE APPLICATIONS THERMAL CLASS 180

AWG Size	Bare Wire Diameter, Inches †			Insulation †		Elongation, Minimum	Scrape, Grams to Fail		Springback, Maximum Degrees	Dielectric Strength, Minimum Breakdown	AWG Size
	Minimum	Nominal	Maximum	Minimum Increase in Diameter, Inches	Maximum Overall Diameter, Inches	Percent	Average	Minimum	per Turn	Volts	
14	0.0635	0.0641	0.0644*	0.0032	0.0682	33	1490	1270	42	5700	14
15	0.0565	0.0571	0.0574*	0.0030	0.0609	33	1400	1190	46	5550	15
16	0.0503	0.0508	0.0511*	0.0029	0.0545	33	1310	1115	50	5400	16
17	0.0448	0.0453	0.0455*	0.0028	0.0488	32	1230	1045	54	5275	17
18	0.0399	0.0403	0.0405*	0.0026	0.0437	32	1150	980	58	5125	18
19	0.0355	0.0359	0.0361*	0.0025	0.0391	31	1070	910	62	5000	19
20	0.0317	0.0320	0.0322*	0.0023	0.0351	30	1000	850	66	4850	20
21	0.0282	0.0285	0.0286*	0.0022	0.0314	30	940	800	53	4725	21
22	0.0250	0.0253	0.0254*	0.0021	0.0281	29	880	750	58	4625	22
23	0.0224	0.0226	0.0227*	0.0020	0.0253	29	820	700	62	4500	23
24	0.0199	0.0201	0.0202*	0.0019	0.0227	28	770	655	67	4375	24
25	0.0177	0.0179	0.0180*	0.0018	0.0203	28	720	615	72	4250	25
26	0.0157	0.0159	0.0160*	0.0017	0.0182	27	675	575	76	4150	26
27	0.0141	0.0142	0.0143	0.0016	0.0164	27	635	540	50	4050	27
28	0.0125	0.0126	0.0127	0.0016	0.0147	26	595	510	55	3950	28
29	0.0112	0.0113	0.0114	0.0015	0.0133	26	560	480	61	3825	29
30	0.0099	0.0100	0.0101	0.0014	0.0119	25	525	450	66	3725	30
31	0.0088	0.0089	0.0090	0.0013	0.0108	24	...	...	...	3450	31
32	0.0079	0.0080	0.0081	0.0012	0.0098	24	...	...	...	3175	32
33	0.0070	0.0071	0.0072	0.0011	0.0088	23	...	...	...	2925	33
34	0.0062	0.0063	0.0064	0.0010	0.0078	22	...	...	...	2675	34
35	0.0055	0.0056	0.0057	0.0009	0.0070	21	...	...	...	2475	35
36	0.0049	0.0050	0.0051	0.0008	0.0063	20	...	...	...	2275	36
37	0.0044	0.0045	0.0046	0.0008	0.0057	20	...	...	...	2100	37
38	0.0039	0.0040	0.0041	0.0007	0.0051	19	...	...	...	1925	38
39	0.0034	0.0035	0.0036	0.0006	0.0045	18	...	...	...	1775	39
40	0.0030	0.0031	0.0032	0.0006	0.0040	17	...	...	...	1625	40
41	0.0027	0.0028	0.0029	0.0005	0.0036	17	...	...	...	1500	41
42	0.0024	0.0025	0.0026	0.0004	0.0032	16	...	...	...	1375	42
43	0.0021	0.0022	0.0023	0.0004	0.0029	15	...	...	...	1250	43
44	0.0019	0.0020	0.0021	0.0004	0.0027	14	...	...	...	1175	44

* This maximum bare wire diameter shall be permitted to be exceeded; see 1.6.7.2.

† For metric equivalent, see Table 1-2.

Copyright National Electrical Manufacturers Association
Provided by IHS under license with NEMA
No reproduction or networking permitted without license from IHS

Not for Resale

MW 83-C (Triple)
POLYURETHANE OVERCOATED WITH POLYAMIDE, TRIPLE FILM INSULATED ROUND COPPER MAGNET WIRE FOR SOLDERABLE APPLICATIONS THERMAL CLASS 180

INSULATING MATERIALS The conductor shall be coated with a dual film. The underlying coating is based on polyurethane resins (1.4.2). The superimposed coating is based on polyamide resins (1.4.2).

THERMAL CLASS 180°C when tested in accordance with Part 1, para. 1.8 and Part 3, para. 3.58.1.

GENERAL REQUIREMENTS See Part 1.

Properties	Test Procedure, See Part 3, Paragraph	Requirements
DIMENSIONS	3.2.1.1	See Table T (MW 83-C)
ADHERENCE AND FLEXIBILITY	3.3.1	No cracks visible in the film coating
ELONGATION	3.4	Not less than value in Table T (MW 83-C)
HEAT SHOCK	3.5	No cracks visible in the film coating after conditioning at 200°C
SPRINGBACK	3.7.1	Not greater than value in Table T (MW 83-C)
DIELECTRIC STRENGTH	3.8.3	Not less than value in Table T (MW 83-C)
CONTINUITY	3.9.2	The number of discontinuities shall not exceed 3
SOLDERABILITY	3.13	Covered with continuous film of solder after immersion times not to exceed the following at the specified temperatures: 25-29 AWG 6 seconds at 390°C 30-36 AWG 5 seconds at 390°C 37-44 AWG 4 seconds at 390°C
PERIODIC CONFORMANCE TESTS		
THERMOPLASTIC FLOW	3.50	Median not less than 225°C with heavy film insulated 36 AWG
SOLUBILITY	3.51	Two specimens of heavy film insulated 36 AWG immersed in xylene shall not soften sufficiently to expose bare conductor.
DIELECTRIC STRENGTH AT RATED TEMPERATURE	3.52	Heavy film insulated wire shall average not less than 1725 volts for 36 AWG
SCRAPE RESISTANCE	3.59	Lowest "grams-to-fail" load for any one of the three tests and the average of the three tests shall not be less than the values in Table T (MW 83-C)

Copyright National Electrical Manufacturers Association
Provided by IHS under license with NEMA
No reproduction or networking permitted without license from IHS

Not for Resale

Table T (MW 83-C)
POLYURETHANE OVERCOATED WITH POLYAMIDE, TRIPLE FILM INSULATED ROUND COPPER MAGNET WIRE FOR SOLDERABLE APPLICATIONS THERMAL CLASS 180

AWG Size	Bare Wire Diameter, Inches†			Insulation†		Elongation, Minimum Percent	Scrape, Grams to Fail		Springback, Maximum Degrees per Turn	Dielectric Strength, Minimum Breakdown Volts	AWG Size
	Minimum	Nominal	Maximum	Minimum Increase in Diameter, Inches	Maximum Overall Diameter, Inches		Average	Minimum			
25	0.0177	0.0179	0.0180*	0.0027	0.0214	28	850	720	74	5675	25
26	0.0157	0.0159	0.0160*	0.0026	0.0193	27	795	675	80	5525	26
27	0.0141	0.0142	0.0143	0.0024	0.0173	27	735	625	55	5400	27
28	0.0125	0.0126	0.0127	0.0023	0.0156	26	690	585	60	5250	28
29	0.0112	0.0113	0.0114	0.0022	0.0142	26	645	550	65	5125	29
30	0.0099	0.0100	0.0101	0.0021	0.0128	25	605	515	70	4975	30
31	0.0088	0.0089	0.0090	0.0017	0.0114	24	...	...	...	4125	31
32	0.0079	0.0080	0.0081	0.0016	0.0103	24	...	...	...	3825	32
33	0.0070	0.0071	0.0072	0.0014	0.0092	23	...	...	...	3550	33
34	0.0062	0.0063	0.0064	0.0013	0.0082	22	...	...	...	3300	34
35	0.0055	0.0056	0.0057	0.0012	0.0074	21	...	...	...	3075	35
36	0.0049	0.0050	0.0051	0.0011	0.0067	20	...	...	...	2850	36
37	0.0044	0.0045	0.0046	0.0010	0.0060	20	...	...	...	2650	37
38	0.0039	0.0040	0.0041	0.0009	0.0054	19	...	...	...	2450	38
39	0.0034	0.0035	0.0036	0.0008	0.0048	18	...	...	...	2250	39
40	0.0030	0.0031	0.0032	0.0008	0.0043	17	...	...	...	2100	40
41	0.0027	0.0028	0.0029	0.0007	0.0039	17	...	...	...	1950	41
42	0.0024	0.0025	0.0026	0.0007	0.0035	16	...	...	...	1800	42
43	0.0021	0.0022	0.0023	0.0006	0.0032	15	...	...	...	1675	43
44	0.0019	0.0020	0.0021	0.0006	0.0029	14	...	...	...	1575	44

* This maximum bare wire diameter shall be permitted to be exceeded; see 1.6.7.2.
† For metric equivalent, see Table 1-3.

Copyright National Electrical Manufacturers Association
Provided by IHS under license with NEMA
No reproduction or networking permitted without license from IHS

Not for Resale

6470247 0515002 158

MW 102-A (Type 1)
POLYESTER (AMIDE) (IMIDE) OVERCOATED WITH POLYAMIDEIMIDE, AND SELF-BONDING OVERCOAT TYPE 1 FILM INSULATED ROUND ALUMINUM MAGNET WIRE THERMAL CLASS 180/BOND STRENGTH PERFORMANCE 180ºC

INSULATING MATERIALS The conductor shall be coated with a multiple film. The underlying coating is based on polyester (amide) (imide) resins (1.4.2). The intermediate coating is based on polyamideimide resins (1.4.2), and the superimposed outer coating is based on resins which are self-bonding in character (1.4.2).

THERMAL CLASS 180°C minimum: when the above construction is tested in accordance with Part 1, paragraph 1.8 and Part 3 paragraph 3.58.1

BOND PERFORMANCE Determined by the retained bond strength at 180°C in accordance with 3.57.4

GENERAL REQUIREMENTS See Part 1.

Properties	Test Procedure See Part 3, Paragraph	Requirements
DIMENSIONS	3.2.1.2	See Table T1 (MW 102-A)
ADHERENCE AND FLEXIBILITY	3.3.1	No cracks visible in film coating
ELONGATION	3.4	Not less than value in Table T1 (MW 102-A)
HEAT SHOCK	3.5	No cracks visible in the film coating after conditioning at 200ºC
DIELECTRIC STRENGTH	3.8.3	Not less than value in Table T1 (MW 102-A)
CONTINUITY	3.9.2	The number of discontinuities shall not exceed 25
PERIODIC CONFORMANCE TESTS		
THERMOPLASTIC FLOW	3.50	Median not less than 300°C with 18 AWG Type 2
SOLUBILITY	3.51	Two specimens of 18 AWG immersed in xylene and 50/50 xylene/butyl Cellosolve shall not soften sufficiently to expose the bare conductor
DIELECTRIC STRENGTH AT RATED TEMPERATURE	3.52	Wire shall average not less than 4275 volts for 18 AWG copper Type 2
BOND – ROOM TEMPERATURE	3.57.3.1	Minimum of 30 lbs of helical coil bond strength of 18 AWG copper Type 2 after oven bonding 30 (+5,-0) minutes at 200 ± 3°C *
BOND – ELEVATED TEMPERATURE	3.57.4	Minimum of 3 lbs of retained bond strength of 18 AWG copper Type 2 Performance after oven bonding 30 (+5,-0) minutes at 200 ± 3°C and tested at 180 ± 3°C *.

* Other bond processing times and temperatures may be used as agreed upon between customer and supplier

Copyright National Electrical Manufacturers Association
Provided by IHS under license with NEMA
No reproduction or networking permitted without license from IHS

Not for Resale

MW 102-A (Type 1)
POLYESTER (AMIDE) (IMIDE) OVERCOATED WITH POLYAMIDEIMIDE, AND SELF-BONDING OVERCOAT TYPE 1 FILM INSULATED ROUND ALUMINUM MAGNET WIRE THERMAL CLASS 180/BOND STRENGTH PERFORMANCE 180°C

INSULATING MATERIALS The conductor shall be coated with a multiple film. The underlying coating is based on polyester (amide) (imide) resins (1.4.2). The intermediate coating is based on polyamideimide resins (1.4.2), and the superimposed outer coating is based on resins which are self-bonding in character (1.4.2).

THERMAL CLASS 180°C minimum: when the above construction is tested in accordance with Part 1, paragraph 1.8 and Part 3 paragraph 3.58.1

BOND PERFORMANCE Determined by the retained bond strength at 180°C in accordance with 3.57.4

GENERAL REQUIREMENTS See Part 1.

Properties	Test Procedure See Part 3, Paragraph	Requirements
DIMENSIONS	3.2.1.2	See Table T1 (MW 102-A)
ADHERENCE AND FLEXIBILITY	3.3.1	No cracks visible in film coating
ELONGATION	3.4	Not less than value in Table T1 (MW 102-A)
HEAT SHOCK	3.5	No cracks visible in the film coating after conditioning at 200°C
DIELECTRIC STRENGTH	3.8.3	Not less than value in Table T1 (MW 102-A)
CONTINUITY	3.9.2	The number of discontinuities shall not exceed 25
PERIODIC CONFORMANCE TESTS		
THERMOPLASTIC FLOW	3.50	Median not less than 300°C with 18 AWG Type 2
SOLUBILITY	3.51	Two specimens of 18 AWG immersed in xylene and 50/50 xylene/butyl Cellosolve shall not soften sufficiently to expose the bare conductor
DIELECTRIC STRENGTH AT RATED TEMPERATURE	3.52	Wire shall average not less than 4275 volts for 18 AWG copper Type 2
BOND – ROOM TEMPERATURE	3.57.3.1	Minimum of 30 lbs of helical coil bond strength of 18 AWG copper Type 2 after oven bonding 30 (+5,-0) minutes at 200 ± 3°C *
BOND – ELEVATED TEMPERATURE	3.57.4	Minimum of 3 lbs of retained bond strength of 18 AWG copper Type 2 Performance after oven bonding 30 (+5,-0) minutes at 200 ± 3°C and tested at 180 ± 3°C *.

* Other bond processing times and temperatures may be used as agreed upon between customer and supplier

Copyright National Electrical Manufacturers Association
Provided by IHS under license with NEMA
No reproduction or networking permitted without license from IHS

Not for Resale

TABLE T1 (MW 102-A)
POLYESTER (AMIDE) (IMIDE) OVERCOATED WITH POLYAMIDEIMIDE, AND SELF-BONDING OVERCOAT TYPE 1 FILM INSULATED ROUND ALUMINUM MAGNET WIRE THERMAL CLASS 180/BOND STRENGTH PERFORMANCE 180°C

AWG Size	Bare Wire Diameter, Inches †			Insulation †					AWG size
				Minimum Increase in Diameter, Inches		Maximum Overall Diameter, Inches	Elongation, Minimum Percent	Dielectric Strength, Minimum Breakdown Volts	
	Minimum	Nominal	Maximum	Film Coating	Outer Coating				
14	0.0635	0.0641	0.0644*	0.0016	0.0006	0.0682	15	3525	14
15	0.0565	0.0571	0.0574*	0.0015	0.0006	0.0609	15	3425	15
16	0.0503	0.0508	0.0511*	0.0014	0.0006	0.0545	15	3325	16
17	0.0448	0.0453	0.0455*	0.0014	0.0006	0.0488	15	3250	17
18	0.0399	0.0403	0.0405*	0.0013	0.0006	0.0437	15	3175	18
19	0.0353	0.0359	0.0361*	0.0012	0.0006	0.0391	15	3075	19
20	0.0317	0.0320	0.0322*	0.0012	0.0005	0.0351	14	3000	20
21	0.0282	0.0285	0.0286*	0.0011	0.0005	0.0314	14	2925	21
22	0.0250	0.0253	0.0254*	0.0011	0.0005	0.0281	14	2850	22
23	0.0224	0.0226	0.0227*	0.0010	0.0005	0.0253	14	2775	23
24	0.0199	0.0201	0.0202*	0.0010	0.0005	0.0227	13	2700	24
25	0.0177	0.0179	0.0180*	0.0009	0.0005	0.0203	13	2625	25
26	0.0157	0.0159	0.0160*	0.0009	0.0005	0.0182	13	2550	26
27	0.0141	0.0142	0.0143	0.0008	0.0005	0.0164	13	2500	27
28	0.0125	0.0126	0.0127	0.0008	0.0005	0.0147	12	2425	28

* This maximum bare wire diameter shall be permitted to be exceeded. See 1.6.7.2
† For metric equivalents, see Table 1-4.

Copyright National Electrical Manufacturers Association
Provided by IHS under license with NEMA
No reproduction or networking permitted without license from IHS

Not for Resale

MW 102-A (Type 2)
POLYESTER (AMIDE) (IMIDE) OVERCOATED WITH POLYAMIDEIMIDE, AND SELF-BONDING OVERCOAT TYPE 2 FILM INSULATED ROUND ALUMINUM MAGNET WIRE THERMAL CLASS 180/BOND STRENGTH PERFORMANCE 180°C

INSULATING MATERIALS The conductor shall be coated with a multiple film. The underlying coating is based on polyester (amide)(imide) resins (1.4.2). The intermediate coating is based on polyamideimide resins (1.4.2), and the superimposed outer coating is based on resins which are self-bonding in character (1.4.2).

THERMAL CLASS 180°C minimum: when the above construction is tested in accordance with Part 1, paragraph 1.8 and Part 3 paragraph 3.58.1.

BOND PERFORMANCE Determined by the retained bond strength at 180°C in accordance with 3.57.4.

GENERAL REQUIREMENTS See Part 1.

Properties	Test Procedure, See Part 3, Paragraph	Requirements
DIMENSIONS	3.2.1.2	See Table T2 (MW 102-A)
ADHERENCE AND FLEXIBILITY	3.3.1	No cracks visible in film coating
ELONGATION	3.4	Not less than value in Table T2 (MW 102-A)
HEAT SHOCK	3.5	No cracks visible in the film coating after conditioning at 200°C
DIELECTRIC STRENGTH	3.8.3	Not less than value in Table T2 (MW 102-A)
CONTINUITY	3.9.2	The number of discontinuities shall not exceed 10
PERIODIC CONFORMANCE TESTS		
THERMOPLASTIC FLOW	3.50	Median not less than 300°C with 18 AWG Type 2
SOLUBILITY	3.51	Two specimens of 18 AWG immersed in xylene and 50/50 xylene/butyl Cellosolve shall not soften sufficiently to expose the bare conductor
DIELECTRIC STRENGTH AT RATED TEMPERATURE	3.52	Wire shall average not less than 4275 volts for 18 AWG copper Type 2
BOND – ROOM TEMPERATURE	3.57.3.1	Minimum of 30 lbs of helical coil bond strength of 18 AWG copper Type 2 after oven bonding 30 (+5,-0) minutes at 200 ± 3°C •
BOND – ELEVATED TEMPERATURE	3.57.4	Minimum of 3 lbs of retained bond strength of 18 AWG copper Type 2 Performance after oven bonding 30 (+5, -0) minutes at 200 ± 3°C and tested at 180 ± 3°C*.

• Other bond processing times and temperatures may be used as agreed upon between customer and supplier

Copyright National Electrical Manufacturers Association
Provided by IHS under license with NEMA
No reproduction or networking permitted without license from IHS

Not for Resale

TABLE T2 (MW 102-A)
POLYESTER (AMIDE) (IMIDE) OVERCOATED WITH POLYAMIDEIMIDE, AND SELF-BONDING OVERCOAT TYPE 2 FILM INSULATED ROUND ALUMINUM MAGNET WIRE THERMAL CLASS 180/BOND STRENGTH PERFORMANCE 180°C

AWG Size	Bare Wire Diameter, Inches †			Insulation† Minimum Increase in Diameter, Inches		Maximum Overall Diameter, Inches	Elongation, Minimum Percent	Dielectric Strength, Minimum Breakdown Volts	AWG size
	Minimum	Nominal	Maximum	Film Coating	Outer Coating				
14	0.0635	0.0641	0.0644*	0.0032	0.0006	0.0700	15	6325	14
15	0.0565	0.0571	0.0574*	0.0030	0.0006	0.0627	15	6175	15
16	0.0503	0.0508	0.0511*	0.0029	0.0006	0.0562	15	6000	16
17	0.0448	0.0453	0.0455*	0.0028	0.0006	0.0504	15	5850	17
18	0.0399	0.0403	0.0405*	0.0026	0.0006	0.0452	15	5700	18
19	0.0353	0.0359	0.0361*	0.0025	0.0006	0.0406	15	5550	19
20	0.0317	0.0320	0.0322*	0.0023	0.0005	0.0364	14	5400	20
21	0.0282	0.0285	0.0286*	0.0022	0.0005	0.0326	14	5250	21
22	0.0250	0.0253	0.0254*	0.0021	0.0005	0.0293	14	5125	22
23	0.0224	0.0226	0.0227*	0.0020	0.0005	0.0264	14	5000	23
24	0.0199	0.0201	0.0202*	0.0019	0.0005	0.0238	13	4850	24
25	0.0177	0.0179	0.0180*	0.0018	0.0005	0.0214	13	4725	25
26	0.0157	0.0159	0.0160*	0.0017	0.0005	0.0193	13	4600	26
27	0.0141	0.0142	0.0143	0.0016	0.0005	0.0173	13	4500	27
28	0.0125	0.0126	0.0127	0.0016	0.0005	0.0156	12	4375	28

* This maximum bare wire diameter shall be permitted to be exceeded. See 1.6.7.2.

† For metric equivalents, see Table 1-5.

Copyright National Electrical Manufacturers Association
Provided by IHS under license with NEMA
No reproduction or networking permitted without license from IHS

Not for Resale

MW 102-C (Type 1)
POLYESTER (AMIDE) (IMIDE) OVERCOATED WITH POLYAMIDEIMIDE, AND SELF-BONDING OVERCOAT TYPE 1 FILM INSULATED ROUND COPPER MAGNET WIRE THERMAL CLASS 180/BOND STRENGTH PERFORMANCE 180°C

INSULATING MATERIALS The conductor shall be coated with a multiple film. The underlying coating is based on polyester (amide)(imide) resins (1.4.2). The intermediate coating is based on polyamideimide resins (1.4.2), and the superimposed outer coating is based on resins which are self bonding in character (1.4.2).

THERMAL CLASS 180°C minimum: when the above construction is tested in accordance with Part 1, paragraph 1.8 and Part 3 paragraph 3.58.1.

BOND PERFORMANCE Determined by the retained bond strength at 180°C in accordance with 3.57.4.

GENERAL REQUIREMENTS See Part 1.

Properties	Test Procedure, See Part 3, Paragraph	Requirements
DIMENSIONS	3.2.1.2	See Table T1 (MW 102-C)
ADHERENCE AND FLEXIBILITY	3.3.1	No cracks visible in film coating
ELONGATION	3.4	Not less than value in Table T1 (MW 102-C)
HEAT SHOCK	3.5	No cracks visible in the film coating after conditioning at 200°C
SPRINGBACK	3.7.1	Not greater than value in Table T1 (MW 102-C)
DIELECTRIC STRENGTH	3.8.3	Not less than value in Table T1 (MW 102-C)
CONTINUITY	3.9.2	The number of discontinuities shall not exceed 15
PERIODIC CONFORMANCE TESTS		
THERMOPLASTIC FLOW	3.50	Median not less than 300°C with 18 AWG or 36 AWG Type 2
SOLUBILITY	3.51	Two specimens of 18 AWG immersed in Xylene and 50/50 xylene/butyl cellosolve shall not soften sufficiently to expose the bare conductor
DIELECTRIC STRENGTH AT RATED TEMPERATURE	3.52	Wire shall average not less than 4275 volts for 18 AWG Type 2 or 1900 volts for 36 AWG Type 2
BOND – ROOM TEMPERATURE	3.57.3.1	Minimum of 30 lbs of helical coil bond strength of 18 AWG Type 2 after oven bonding 30 (+5,-0) minutes at 200 ± 3°C.
BOND – ELEVATED TEMPERATURE	3.57.4	Minimum of 3 lbs of retained bond strength of 18 AWG Type 2 after oven bonding 30 (+5,-0) minutes at 200 ± 3°C and tested at 180 ± 3°C *.
		* Other bond processing times and temperatures may be used as agreed upon between customer and supplier

Copyright National Electrical Manufacturers Association
Provided by IHS under license with NEMA
No reproduction or networking permitted without license from IHS

Not for Resale

TABLE T1 (MW 102-C)
POLYESTER (AMIDE) (IMIDE) OVERCOATED WITH POLYAMIDEIMIDE, AND SELF-BONDING OVERCOAT TYPE 1 FILM INSULATED ROUND COPPER MAGNET WIRE THERMAL CLASS 180/BOND STRENGTH PERFORMANCE 180°C

AWG Size	Bare Wire Diameter, Inches †			Insulation †: Minimum Increase in Diameter, Inches		Maximum Overall Diameter, Inches	Elongation, Minimum Percent	Springback, Maximum Degrees per Turn	Dielectric Strength, Minimum Breakdown Volts	AWG Size
	Minimum	Nominal	Maximum	Film Coating	Outer Coating					
14	0.0635	0.0641	0.0644*	0.0016	0.0006	0.0682	33	42	3525	14
15	0.0565	0.0571	0.0574*	0.0015	0.0006	0.0609	33	46	3425	15
16	0.0503	0.0508	0.0511*	0.0014	0.0006	0.0545	33	50	3325	16
17	0.0448	0.0453	0.0455*	0.0014	0.0006	0.0488	32	54	3250	17
18	0.0399	0.0403	0.0405*	0.0013	0.0006	0.0437	32	58	3175	18
19	0.0353	0.0359	0.0361*	0.0012	0.0006	0.0391	31	62	3075	19
20	0.0317	0.0320	0.0322*	0.0012	0.0005	0.0351	30	66	3000	20
21	0.0282	0.0285	0.0286*	0.0011	0.0005	0.0314	30	53	2925	21
22	0.0250	0.0253	0.0254*	0.0011	0.0005	0.0281	29	58	2850	22
23	0.0224	0.0226	0.0227*	0.0010	0.0005	0.0253	29	62	2775	23
24	0.0199	0.0201	0.0202*	0.0010	0.0005	0.0227	28	67	2700	24
25	0.0177	0.0179	0.0180*	0.0009	0.0005	0.0203	28	72	2625	25
26	0.0157	0.0159	0.0160*	0.0009	0.0005	0.0182	27	76	2550	26
27	0.0141	0.0142	0.0143	0.0008	0.0005	0.0164	27	50	2500	27
28	0.0125	0.0126	0.0127	0.0008	0.0005	0.0147	26	55	2425	28
29	0.0112	0.0113	0.0114	0.0007	0.0004	0.0133	26	61	2375	29
30	0.0099	0.0100	0.0101	0.0007	0.0004	0.0119	25	66	2300	30
31	0.0088	0.0089	0.0090	0.0006	0.0004	0.0108	24	...	2075	31
32	0.0079	0.0080	0.0081	0.0006	0.0004	0.0098	24	...	1850	32
33	0.0070	0.0071	0.0072	0.0005	0.0004	0.0088	23	...	1675	33
34	0.0062	0.0063	0.0064	0.0005	0.0003	0.0078	22	...	1500	34
35	0.0055	0.0056	0.0057	0.0004	0.0003	0.0070	21	...	1325	35
36	0.0049	0.0050	0.0051	0.0004	0.0003	0.0063	20	...	1200	36
37	0.0044	0.0045	0.0046	0.0003	0.0003	0.0057	20	...	1075	37
38	0.0039	0.0040	0.0041	0.0003	0.0002	0.0051	19	...	950	38
39	0.0034	0.0035	0.0036	0.0002	0.0002	0.0045	18	...	850	39
40	0.0030	0.0031	0.0032	0.0002	0.0002	0.0040	17	...	775	40

* This maximum bare wire diameter shall be permitted to be exceeded. See 1.6.7.2.
† For metric equivalents, see Table 1-4.

Copyright National Electrical Manufacturers Association
Provided by IHS under license with NEMA
No reproduction or networking permitted without license from IHS

Not for Resale

MW 102-C (Type 2)
POLYESTER (AMIDE) (IMIDE) OVERCOATED WITH POLYAMIDEIMIDE, AND SELF-BONDING OVERCOAT TYPE 2 FILM INSULATED ROUND COPPER MAGNET WIRE THERMAL CLASS 180/BOND STRENGTH PERFORMANCE 180°C

INSULATING MATERIALS The conductor shall be coated with a multiple film. The underlying coating is based on polyester (amide) (imide) resins (1.4.2). The intermediate coating is based on polyamideimide resins (1.4.2), and the superimposed outer coating is based on resins which are self-bonding in character (1.4.2).

THERMAL CLASS 180°C minimum: when the above construction is tested in accordance with Part 1, paragraph 1.8 and Part 3 paragraph 3.58.1.

BOND PERFORMANCE Determined by a minimum of three pounds of retained bond strength of an 18 AWG copper Type 2 product when tested at 180°C in accordance with 3.57.4

GENERAL REQUIREMENTS See Part 1.

Properties,	Test Procedure, See Part 3, Paragraph	Requirements
DIMENSIONS	3.2.1.2	See Table T2 (MW 102-C)
ADHERENCE AND FLEXIBILITY	3.3.1	No cracks visible in film coating
ELONGATION	3.4	Not less than value in Table T2 (MW 102-C)
HEAT SHOCK	3.5	No cracks visible in the film coating after conditioning at 200°C
SPRINGBACK	3.7.1	Not greater than value in Table T2 (MW 102-C)
DIELECTRIC STRENGTH	3.8.3	Not less than value in Table T2 (MW 102-C)
CONTINUITY	3.9.2	The number of discontinuities shall not exceed 5
PERIODIC CONFORMANCE TESTS		
THERMOPLASTIC FLOW	3.50	Median not less than 300°C with 18 AWG Type 2
SOLUBILITY	3.51	Two specimens of 18 AWG immersed in xylene and 50/50 xylene/butyl Cellosolve shall not soften sufficiently to expose the bare conductor
DIELECTRIC STRENGTH AT RATED TEMPERATURE	3.52	Wire shall average not less than 4275 volts for 18 AWG Type 2 or 1900 volts for 36 AWG Type 2
BOND – ROOM TEMPERATURE	3.57.3.1	Minimum of 30 lbs of helical coil bond strength of 18 AWG Type 2 after oven bonding 30 (+5,-0) minutes at 200 ±3°C.
BOND – ELEVATED TEMPERATURE	3.57.4	Minimum of 3 lbs of retained bond strength of 18 AWG Type 2 after oven bonding 30 (+5,-0) minutes at 200 ± 3°C and tested at 180 ± 3°C *.

* Other bond processing times and temperatures may be used as agreed upon between customer and supplier

Copyright National Electrical Manufacturers Association
Provided by IHS under license with NEMA
No reproduction or networking permitted without license from IHS

Not for Resale

TABLE T2 (MW 102-C)
POLYESTER (AMIDE) (IMIDE) OVERCOATED WITH POLYAMIDEIMIDE, AND SELF-BONDING OVERCOAT TYPE 2 FILM INSULATED ROUND COPPER MAGNET WIRE THERMAL CLASS 180/BOND STRENGTH PERFORMANCE 180°C

AWG Size	Bare Wire Diameter, Inches †			Insulation †						AWG Size
				Minimum Increase in Diameter, Inches		Maximum Overall				
	Minimum	Nominal	Maximum	Film Coating	Outer Coating	Diameter, Inches	Elongation, Minimum Percent	Springback, Maximum Degrees per Turn	Dielectric Strength, Minimum Breakdown Volts	
14	0.0635	0.0641	0.0644*	0.0032	0.0006	0.0700	33	46	6325	14
15	0.0565	0.0571	0.0574*	0.0030	0.0006	0.0627	33	49	6175	15
16	0.0503	0.0508	0.0511*	0.0029	0.0006	0.0562	33	53	6000	16
17	0.0448	0.0453	0.0455*	0.0028	0.0006	0.0504	32	58	5850	17
18	0.0399	0.0403	0.0405*	0.0026	0.0006	0.0452	32	62	5700	18
19	0.0353	0.0359	0.0361*	0.0025	0.0006	0.0406	31	66	5550	19
20	0.0317	0.0320	0.0322*	0.0023	0.0005	0.0364	30	70	5400	20
21	0.0282	0.0285	0.0286*	0.0022	0.0005	0.0326	30	53	5250	21
22	0.0250	0.0253	0.0254*	0.0021	0.0005	0.0293	29	58	5125	22
23	0.0224	0.0226	0.0227*	0.0020	0.0005	0.0264	29	64	5000	23
24	0.0199	0.0201	0.0202*	0.0019	0.0005	0.0238	28	69	4850	24
25	0.0177	0.0179	0.0180*	0.0018	0.0005	0.0214	28	74	4725	25
26	0.0157	0.0159	0.0160*	0.0017	0.0005	0.0193	27	80	4600	26
27	0.0141	0.0142	0.0143	0.0016	0.0005	0.0173	27	55	4500	27
28	0.0125	0.0126	0.0127	0.0016	0.0005	0.0156	26	60	4375	28
29	0.0112	0.0113	0.0114	0.0015	0.0004	0.0142	26	65	4250	29
30	0.0099	0.0100	0.0101	0.0014	0.0004	0.0128	25	70	4150	30
31	0.0088	0.0089	0.0090	0.0013	0.0004	0.0115	24	...	3825	31
32	0.0079	0.0080	0.0081	0.0012	0.0004	0.0105	24	...	3525	32
33	0.0070	0.0071	0.0072	0.0011	0.0004	0.0095	23	...	3250	33
34	0.0062	0.0063	0.0064	0.0010	0.0003	0.0084	22	...	2975	34
35	0.0055	0.0056	0.0057	0.0009	0.0003	0.0076	21	...	2750	35
36	0.0049	0.0050	0.0051	0.0008	0.0003	0.0069	20	...	2525	36
37	0.0044	0.0045	0.0046	0.0008	0.0003	0.0062	20	...	2325	37
38	0.0039	0.0040	0.0041	0.0007	0.0002	0.0056	19	...	2150	38
39	0.0034	0.0035	0.0036	0.0006	0.0002	0.0050	18	...	1975	39
40	0.0030	0.0031	0.0032	0.0006	0.0002	0.0044	17	...	1800	40

* This maximum bare wire diameter shall be permitted to be exceeded. See 1.6.7.2.

† For metric equivalents, see Table 1-5.

Copyright National Electrical Manufacturers Association
Provided by IHS under license with NEMA
No reproduction or networking permitted without license from IHS

Not for Resale

Part 3
TEST PROCEDURES

(See 1.3 for Definitions and 1.6 for Test Conditions and Parameters)

3.1 SAFETY STATEMENT

It is not the intent of this standard to address all of the safety issues associated with its use. It is the responsibility of the user of this standard to train personnel, establish proper health and safety procedures and be aware of local, state and national regulatory restrictions which may apply.

Chemical Hazard - Some tests use materials which local, state, and national regulatory agencies have determined to be hazardous. These tests shall be performed under controlled conditions which allow for proper safety and protection of personnel. Information and instructions contained in the Material Safety Data Sheets (MSDS) for handling, working and disposal of hazardous chemicals shall be followed. Furthermore, discharges of these chemicals to the environment, that is, the air, water or ground must comply with the latest applicable regulations.

Electrical Hazard - Certain test procedures require high voltage. It is important that the equipment be designed to comply with good engineering practices with safety being an integral part of the design. To avoid electric shocks in such cases, necessary precautions must be taken and test equipment manufacturers' recommendations shall be followed.

Mechanical Hazard - Some tests utilizing mechanical equipment may expose the operator to mechanical hazards. Care must be exercised to protect eyes, fingers, hands, and other body parts from injury.

Thermal Hazard - In tests requiring elevated temperatures, precautions must be taken in handling materials exposed to heat to avoid skin burns.

ROUTINE TESTS

3.2 DIMENSIONS

The increase in dimensions due to the insulation shall be determined in the following manner:

3.2.1 Round Wire

3.2.1.1 Film Insulated

The film insulated wire shall be measured at four points, spaced approximately 45 degrees apart, around the circumference. The largest and smallest readings shall be recorded, and the average of these two readings shall be taken as the overall diameter. The insulation shall then be removed at approximately the same position on the wire by means not injurious to the bare wire and the measurements repeated around the bare wire. The average of the largest and smallest readings shall be taken as the diameter of the bare wire. Measuring instruments such as pressure type micrometers, electronic meters, or light wave micrometers shall be permitted to be used in measuring diameters (See Table 3-1). The increase in diameter due to the insulation shall be calculated in accordance with the following equation:

(Increase in diameter due to insulation) = (Overall diameter) - (Diameter of bare wire)

3.2.1.2 Self Bonding Over Coated

The increase in diameter due to the self-bonding overcoat shall be determined in the following manner. The overall diameter shall be measured in accordance with 3.2.1.1. The self-bonding overcoat shall then be removed by immersing the wire for 2 minutes in a solvent which will remove the outer coating without swelling or softening the underlying film coating and then wiping the wire with a cheesecloth pad dampened with solvent. The

Copyright National Electrical Manufacturers Association
Provided by IHS under license with NEMA
No reproduction or networking permitted without license from IHS
Not for Resale

dimension of the wire over the underlying film coating shall be measured at four points, spaced approximately 45 degrees apart, around the circumference of the wire. The average of the largest and smallest readings shall be taken as the diameter over the underlying film coated wire. The increase in the diameter due to the self-bonding overcoat shall be calculated in accordance with the following:

(Increase in diameter due to self-bonding overcoat) = (Overall diameter) - (Diameter of underlying film coated wire).

The increase in diameter due to the underlying film coating shall be determined in accordance with 3.2.1.1.

3.2.1.3 Fibrous and Tape Covered

Fibrous covered wire shall be measured at three locations, spaced approximately 1 foot (305 mm) apart. In each set of measurements, the diameter shall be measured at two points on the circumference, approximately 90 degrees apart. The average of these readings shall be taken as the overall diameter. When measuring tape covered wire, care shall be exercised to make measurements at the maximum overall diameter. A pressure type micrometer shall be used to measure the diameters (See Table 3-1). The insulation shall then be removed at approximately the same positions on the wire by means not injurious to the bare wire and the measurements repeated around the bare wire.

In the case of glass fiber or polyester glass covering over film coated wire, the film coating as well as the glass fibers shall be removed and the measurements repeated around the bare wire. In each set of measurements, the diameter shall be measured at two points on the circumference, approximately 90 degrees apart. The increase in diameter due to the insulation shall be calculated in accordance with the following:

(Increase in diameter due to insulation) = (Overall diameter) - (Diameter of bare wire)

Table 3-1

SPECIFICATION FOR MICROMETER ANVIL DIAMETER AND SPINDLE FORCE

Test Parameters	Wire Type	Film Coated	Fibrous Covered	Tape Covered
Anvil Diameter	Round and Rectangular	0.250 ± .001 in. (6 ± .03 mm)	0.250 ± .001 in. (6 ± .03 mm)	0.250 ± .001 in. (6 ± .03 mm)
Spindle Force	Round	25 AWG and Smaller 3–5 oz. (0.8–1.4 N)	Same as Film Coated	—
Spindle Force	Round	Larger than 25 AWG 8–10 oz. (2.2–2.8 N)	Same as Film Coated	—
Spindle Force	Rectangular	All sizes 8–10 oz. (2.2–2.8 N)	Same as Film Coated	—
Spindle Force	Round and Rectangular	—	—	All Sizes (2.5–3.0 lb.) 11.2–13.4 N)

3.2.2 Rectangular and Square Wire

3.2.2.1 Film Insulated

The overall dimension shall be measured on three carefully straightened specimens, each at least 3 inches (76 mm) long, taken from the reel at approximately 1 foot (305 mm) intervals. Straightening shall be accomplished by stretching the wire not more than 1 percent to remove bends or kinks . One measurement of the dimension shall be made over the insulation of each specimen for both the thickness and width. The average of the three readings for thickness and width shall be taken as the overall dimension for thickness and width. The insulation shall then be removed at these points by means not injurious to the bare wire, the same measurements made, and then the average taken as the dimensions of the bare wire. A pressure type micrometer shall be used

Copyright National Electrical Manufacturers Association
Provided by IHS under license with NEMA
No reproduction or networking permitted without license from IHS
Not for Resale

to measure the thickness and width dimensions (See Table 3-1). The radii of bare wire shall be measured with a standard radius gauge.

Thickness and Width - The increase in the thickness and width dimensions due to the insulation shall be calculated in accordance with the following:

Increase in dimension due to insulation = (Overall dimension) – (Dimension of bare wire)

3.2.2.2 Fibrous and Tape Covered

The dimensions shall be measured in accordance with 3.2.2.1.

A pressure type micrometer shall be used to measure overall dimensions (See Table 3-1).

In the case of glass fiber or polyester glass covering over film coated wire, the film coating as well as the glass fibers shall be removed and the measurements repeated to determine the overall increase due to the insulation.

When measuring tape covered wire, care shall be exercised to make measurements at the maximum overall dimensions.

3.3 ADHERENCE AND FLEXIBILITY

Warning: Mechanical Hazard - Equipment must be designed to contain any flying pieces of wire. Operator should wear proper safety equipment.

3.3.1 Elongation and Mandrel Wrap Method

A specimen having an effective length of 10 inches (254 mm) shall be elongated, wound ten turns (or until the specimen is consumed) around a mandrel, and examined in accordance with Table 3-2. Round wire test specimens shall be evenly wound in a close helix around the mandrel and under sufficient tension to ensure a compact winding. Care shall be exercised not to introduce an axial twist into the specimen. Any failures on the first and last turns of the round wire mandrel specimens shall be disregarded.

Table 3-2
ADHERENCE AND FLEXIBILITY: ELONGATION AND MANDREL DIAMETERS

Material AWG Size	Elongation Rate	Elongation Percent (+2,-0)	Mandrel Diameter	Examined With
Copper				
4–9	12" ± 1" per minute*	30	None	Normal vision
10–13	12" ± 1" per minute*	25	5d	Normal vision
14–20	Sudden jerk**	20	3d	Normal vision
21–30	Sudden jerk**	15	1d	Normal vision
31–44	Sudden jerk**	20†	3d	6x–10x magnification
45–56	Sudden jerk**	Breaking point	None	10x–15x magnification
Aluminum				
4–9	12" ± 1" per minute*	15	None	Normal vision
10–15	12" ± 1" per minute*	15	5d	Normal vision
16–20	Sudden jerk**	15†	3d	Normal vision
21–25	Sudden jerk**	10†	3d	Normal vision

* 305 mm ± 25 mm per minute
** 12-15 ft./sec. (3.7-4.9 m/sec.)
† Or to its breaking point, whichever is less

Copyright National Electrical Manufacturers Association
Provided by IHS under license with NEMA
No reproduction or networking permitted without license from IHS
Not for Resale

3.3.2 Mandrel Wrap Method

A specimen of sufficient length shall be tightly wound three turns around a mandrel equal to the diameter specified in Part 2. Round wire test specimens shall be evenly wound in a close helix around the mandrel and under sufficient tension to ensure a compact winding. Care shall be exercised not to introduce an axial twist into the specimen. The specimen shall be examined with normal vision.

3.3.3 Elongation Method

A specimen having an effective length of 10 inches (254 mm) shall be elongated by the percentage specified in Part 2, at a rate of 12 ± 1 inches (305 ± 25 mm) per minute. The elongation shall be 30 percent (+2, -0) for copper or 15 percent (+2, -0) for aluminum if an elongation percentage is not specified in Part 2. The specimen shall be examined with normal vision.

3.3.4 Circumferential Cut and Elongation Method

The insulation of a test specimen having an effective length of 10 inches (254 mm) shall be circumferentially cut at approximately its mid-point and then elongated at least 10% at a rate of 12 inches ± 1 inch per minute (305 mm ± 25 mm). The specimen shall then be examined with normal vision.

3.3.5 Bend and Shot Dielectric Method

A specimen shall be wound flatwise 180 degrees around a mandrel having a diameter 10 times the thickness of the bare wire, and the bent portion shall be buried in lead, nickel or nickel-plated shot, 0.080 to 0.110 inch in diameter (2.0 mm to 2.8 mm). The specimen shall then be tested in accordance with 3.8.1, applying the voltage between the conductor and the shot.

3.3.6 Flat and Edge Bend Method

A specimen shall be bent flatwise and edgewise 90 degrees around a mandrel having a diameter 4 times the thickness or width respectively. The specimen shall be examined with normal vision.

3.4 ELONGATION

A specimen having an effective length of 10 inches (254 mm) shall be elongated to its breaking point at a rate of 12 ±1 inches (305 ± 25 mm) per minute. The specimen gripping jaws shall be such that a break will not occur within 1/4 inch (6 mm) of either jaw. The travel distance of the jaw at the instant of break shall be noted and the percentage of elongation calculated.

Note: In case of failure of glass fiber covered wire sizes 21 AWG and larger, the fibrous covering shall be removed from another specimen and the wire tested. On sizes 22 AWG and smaller, the fibrous covering shall be removed from the specimens prior to testing.

3.5 Heat Shock

Warning: Thermal Hazard - Care must be exercised in removing test specimens from the oven to avoid skin burns.

A specimen having an effective length of 10 inches (254 mm) shall be elongated at the rate given and wound not more than ten turns around a mandrel equal to the diameter given in Table 3-3 on the following page. Round wire test specimens shall be evenly wound in a close helix around the mandrel and under sufficient tension to ensure a compact winding. Any failures on the first and last turns of the round wire mandrel specimens shall be disregarded. Care shall be exercised not to introduce an axial twist into the specimen.

Copyright National Electrical Manufacturers Association
Provided by IHS under license with NEMA
No reproduction or networking permitted without license from IHS
Not for Resale

The specimen shall be removed from the mandrel and placed in a circulating air oven for 30 (+5, -0) minutes at not less than the temperature specified in Part 2. The specimen shall be allowed to cool to room temperature and shall then be examined in accordance with Table 3-3.

Table 3-3
HEAT SHOCK: ELONGATION AND MANDREL DIAMETERS

Material AWG Size	Elongation Rate	Elongation, Percent (+2, -0)	Mandrel Diameter	Examined With
Copper				
Rectangular	12 ±1 in. per minute*	See Part 2	None	Normal vision
4–9 Round	12 ±1 in. per minute*	30	None	Normal vision
10–13	12 ±1 in. per minute*	25	5d	Normal vision
14–30	Sudden jerk**	20	3d	Normal vision
31–44	Sudden jerk**	20†	3d	6x–10x magnification
Aluminum				
Rectangular	12 ±1 in. per minute*	See Part 2	None	Normal vision
4–9	12 ±1 per minute*	15	None	Normal vision
10–15	12 ±1 in. per minute*	15	5d	Normal vision
16–20	Sudden jerk**	15†	3d	Normal vision
21–25	Sudden jerk**	10†	3d	Normal vision

* 305 mm ± 25 mm per minute
** 12–16 ft/sec (3.7 to 4.9 m/sec)
† Or to its breaking point, whichever is less

3.6 (RESERVED)

3.7 SPRINGBACK (SPECIFIED FOR COPPER CONDUCTORS ONLY)

3.7.1 Mandrel Wrap Method (Round Wire Sizes 14-30 AWG)

Using a Springback tester (see Figure 3-1), a specimen shall be wound three turns at a rate of 5 to 10 rpm around a mandrel having the diameter shown in Table 3-4 under the tension indicated. One end of the coil shall be held and the other allowed to unwind slowly.

Table 3-4
SPRINGBACK: MANDREL DIAMETERS AND TENSIONS

AWG Size	Diameter (± .005") Mandrel		Tension (± 2%)	
	inches	mm	ounces	N
14–20	3.25	82.6	16	4.45
21–24	1.88	47.6	4	1.11
25–26	1.88	47.6	2	0.56
27–30	0.75	19.0	2	0.56

Copyright National Electrical Manufacturers Association
Provided by IHS under license with NEMA
No reproduction or networking permitted without license from IHS
Not for Resale

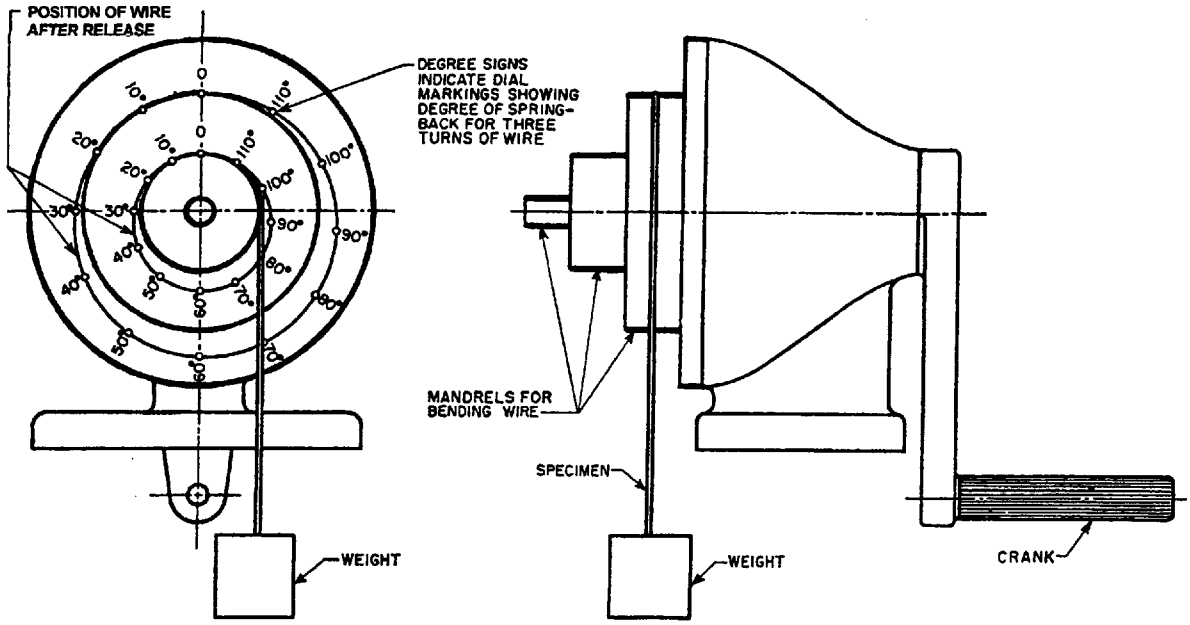

Figure 3-1
SPRINGBACK TESTER

The Springback tester shall be operated in accordance with the following procedure:

a. The instrument shall be mounted with the shaft of the mandrel horizontal and at a height sufficient to allow a 4.0 ft. (1.22 meter) sample to hang freely.

b. The mandrel shall be locked in position so that the hole for fastening the wire is in a vertical position to correspond with zero on the dials.

c. The wire to be tested shall be removed carefully from the package in such a way that the wire will not be subjected to extra bends or tension and shall be wound onto the mandrel in the same direction as originally coiled.

d. One end of the wire shall be inserted into the mandrel hole provided, using the diameter of mandrel and weight specified in Table 3-4.

e. The wire shall be layer-wound by turning the mandrel counterclockwise through exactly three revolutions.

f. A mark shall be made on the last turn opposite the zero mark on the dial.

g. The wire shall be held in place on the mandrel and the weight removed.

h. The wire shall be cut, leaving approximately 1/2 inch (12 mm) of wire past the zero mark. This 1/2 inch (12 mm) length shall be bent into a vertical position.

i. Placing a pencil to the left of the vertical end of the wire for support, the coil shall be allowed to unwind slowly without jerking. (If the wire is permitted to spring back suddenly, erroneous results are obtained).

j. The indicating point on the free end of the coil shall come to rest on the curve on each dial.

k. The Springback value is read from the indicating dial on the mandrel which aligns with the mark on the last turn.

NOTE–A soft wire will exhibit less tendency to spring back; hence the figure representing the degrees return (Springback) will be less than that for harder wire. (This note is classified as Authorized Engineering Information.)

Copyright National Electrical Manufacturers Association
Provided by IHS under license with NEMA
No reproduction or networking permitted without license from IHS
Not for Resale

3.7.2 Deflection Method (All Rectangular, and Round Wire Sizes Larger Than 14 AWG)

3.7.2.1 Principle of Test

The test consists of bending a specimen over a given angle, then removing the load and measuring the Springback in degrees.

3.7.2.2 Specimen

The sample shall be at least 48 inches (1219 mm) long and shall be removed from the spool with as little bending as possible. It shall be carefully straightened by hand and cut into 16 inch (406 mm) specimens. Work hardening shall be minimized. Elongation by machines shall NOT be used for straightening.

3.7.2.3 Test Apparatus

The Springback is determined by means of the apparatus shown in Figure 3-2, consisting essentially of two smooth jaws, one fixed (2), the other moveable (1), and a sector graduated in degrees (5) with the 0-10° sector of the scale graduated in 0.5° increments.

The test apparatus shall be placed in a horizontal position on a table. The graduated sector is an arc placed in a plane 90° to the clamp faces. Its center is located at the outer edge of the fixed jaw (3). The lever arm whose fulcrum is placed at the center of the arc can move over the graduated sector in the horizontal plane. The lever arm shall have a marker to clearly indicate the Springback. There is a movable slider (4), located on the lever arm which has a 12 inch (305 mm) length scaled off in tenths of an inch (or 0.25 mm).

3.7.2.4 Test Procedure

The test shall be made by bending the wire specimens in the same direction that the wire was bent when wound on the spool. A lever arm slider is provided to compensate for differences in thicknesses or diameter of the test specimen. The bare wire thickness (or round wire diameter) shall be measured to determine the actual position of the slider. The calculated distance from the fulcrum to the lever arm slider pointer is determined by multiplying the thickness (or diameter) of the wire by 40. The wire is

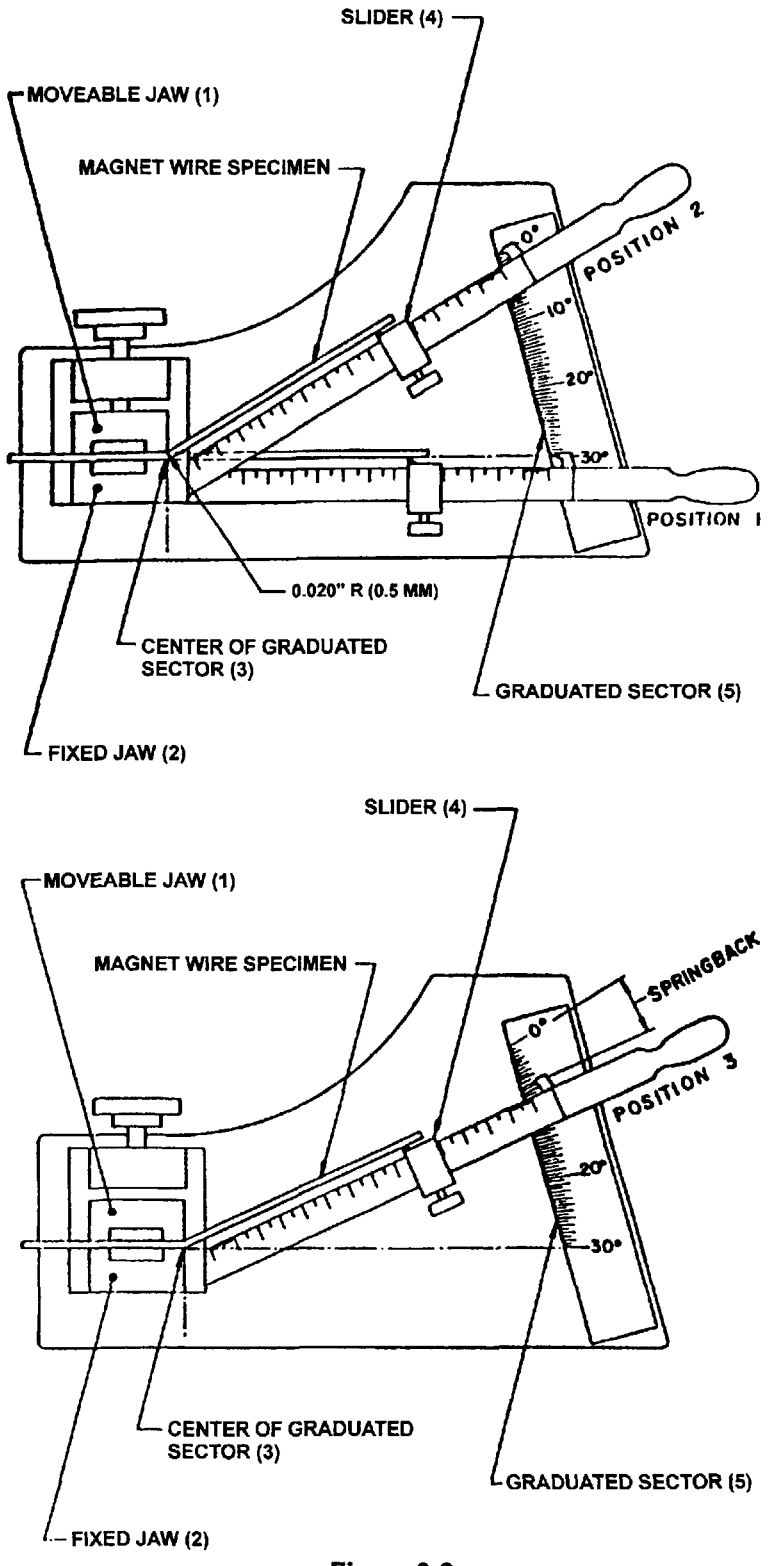

Figure 3-2
APPARATUS FOR SPRINGBACK DEFLECTION METHOD

Copyright National Electrical Manufacturers Association
Provided by IHS under license with NEMA
No reproduction or networking permitted without license from IHS
Not for Resale

moderately tightened between the jaws with the direction of the former curvature up, or away from the operator, to leave a free length of specimen extending approximately 0.5 inches (13 mm) beyond the slider knife edge.

By means of the lever arm, starting at the horizontal position (the 30° scale mark, position 1), the wire is gently bent 30° (to the 0° scale mark, position 2). The time of this bending shall be not less than 2 seconds nor more than 5 seconds. The specimen is held at the 0° point (a 30° bend) for a maximum of 2 seconds.

3.7.2.5 Value of Springback

The lever arm is gently returned in the reverse direction at the same angular rate at which it was raised until the slider knife edge moves away from the wire specimen. The lever arm is then raised until the slider knife edge again just contacts the wire specimen without moving it. The point where the lever arm pointer aligns with the graduated sector scale indicates the Springback value

The value of Springback is read directly on the scale shown by the position of the lever arm marker on the graduated sector (in position 3).

The operator shall test three specimens per sample. The results of the three specimens must not differ by more than 0.5° over a consecutive length of sample or a new sample shall be selected and tested. The final result shall be the average of the three specimens.

3.8 DIELECTRIC STRENGTH

Warning: Electrical Hazard - Extremely high voltages may be present. Personnel performing the test must be adequately trained and qualified. The design of the test equipment must comply with good engineering practice and incorporate safety features. This includes grounding of metal parts to avoid electric shock and burns to operators performing the test.

Warning: Chemical Hazard - Ozone gas may be generated under high voltage conditions during testing. Test area must have adequate ventilation.

3.8.1 Test Procedure - General

A source of 60-hertz voltage of a substantially sinusoidal wave form shall be applied separately and consecutively between a specified electrode and the conductor or between two conductor legs.

The testing transformer shall have a rating of 500 volt-amperes or more and shall provide an essentially undistorted wave form under test conditions.

Fault current of the circuit shall be a minimum of 1.5 milliamperes.

The voltage shall start at zero and shall be increased uniformly at the rate of 500 volts per second (± 10%) until breakdown occurs. In the event that breakdown occurs in less than 5 seconds, the rate of increase in voltage shall be reduced sufficiently so that breakdown occurs in not less than 5 seconds. The breakdown voltage (ASTM D 149) shall be measured with a meter calibrated in rms. (root mean squared) volts in accordance with one of the methods described in ANSI/IEEE Std 4.

In case of failure under prevailing laboratory conditions, another specimen of wire in an unbent and unstretched condition shall be dried for 20 ± 1 minutes in a forced air oven at 60°C ± 3°C (140 ± 4.5°F). The sample shall be cooled to room temperature and tested in accordance with the foregoing procedure.

Dielectric breakdown values are affected by the presence of skin oils, acids, salts, dust, dirt, etc. Gloves shall be worn when preparing test specimens or during handling of magnet wire for this test.

Copyright National Electrical Manufacturers Association
Provided by IHS under license with NEMA
No reproduction or networking permitted without license from IHS
Not for Resale

3.8.2 Foil Electrode Method

Electrodes shall be prepared by applying a 1/4 inch (6 mm) wide thin metal foil to the center of a 1/2-inch (13 mm) wide pressure-sensitive tape. The tape shall be cut into strips each about three inches (76 mm) long. Four of these electrodes shall be applied at right angles to the specimen at intervals approximately 2 inches (51 mm) and shall be wrapped smoothly and firmly around the specimen a minimum of 1-1/2 complete turns, with the metal surface of the foil in contact with the insulation. The test voltage shall be applied separately and consecutively between each electrode and the conductor.

3.8.3 Twisted Pair Method

A specimen of wire shall be formed into a "U" shape and the two legs shall be twisted together the number of 360° rotations specified in Table 3-5 to form an effective sample length of 4.75 ± 0.25 inches (121 mm ± 6 mm). The total tension on the two legs, and the total number of rotations shall be as shown in Table 3-5. The closed end loop of the twisted specimen shall be cut and the ends shall be carefully and adequately separated. There shall be no sharp bends in the specimen or damage to the insulation. A source of 60-hertz voltage of a substantially sinusoidal wave form shall be applied between the two conductor legs.

Table 3-5
TWISTED PAIR METHOD: TENSIONS AND ROTATIONS

AWG Size	Total Tension on Specimen (± 2%)	Total Number of Rotations
8–9*	24 Pounds (107N)	3
10–11	24 Pounds (107N)	3
12–14	12 Pounds (53 N)	4
15–17	6 Pounds (27N)	6
18–20	3 Pounds (13N)	8
21–23	1.5 Pounds (7N)	12
24–26	340 Grams (3.3 N)	16
27–29	170 Grams (1.7 N)	20
30–32	85 Grams (0.8 N)	25
33–35	40 Grams (0.4 N)	31
36–38	20 Grams (0.2 N)	36
30–41	10 Grams (0.1 N)	41
42–44	5 Grams (0.05 N)	46

* Aluminum only

3.8.4 Wound Pair Method

A wire shall be bent over the hook of the served wire specimen winder (see Figure 3-3) and wound in a manner similar to that described in 3.8.3, but without axial twist in the conductor, for a distance of 4.75 ± 0.25 inches (121 ± 6 mm). The tension on

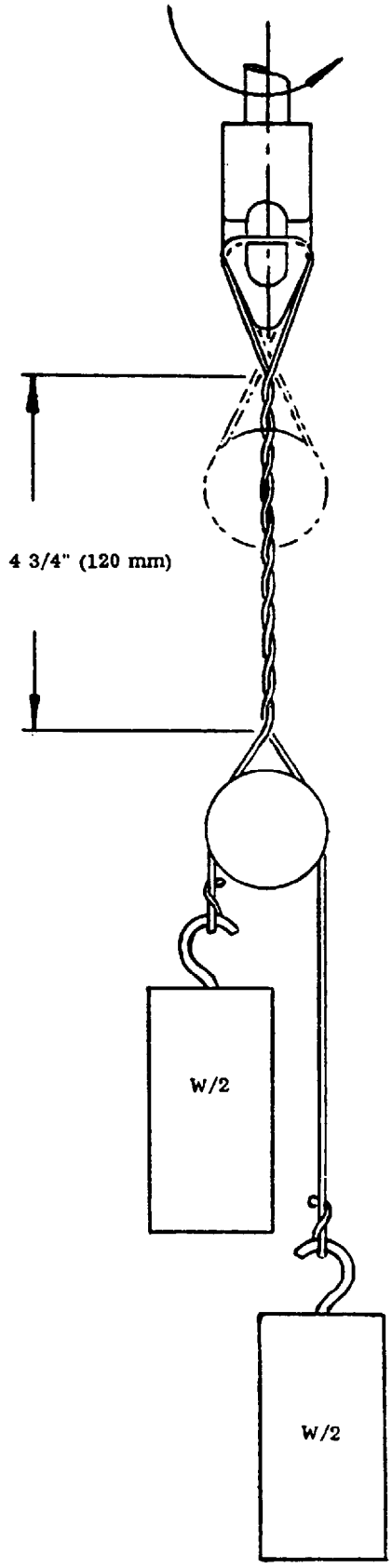

Figure 3-3
WOUND PAIR SPECIMEN WINDER

Copyright National Electrical Manufacturers Association
Provided by IHS under license with NEMA
No reproduction or networking permitted without license from IHS
Not for Resale

each wire of the pair shall be one-half that given in Table 3-5. The total number of rotations shall be as shown in Table 3-5. The ends shall be carefully and adequately separated, and there shall be no sharp bends in the specimen or damage to the insulation. A source of 60-hertz voltage of a substantially sinusoidal wave form shall be applied between the two conductor legs.

3.8.5 Layer Method

Two specimens shall be wound, one on top of the other, for a distance of approximately 1 inch (25 mm) on a smooth mandrel of an insulating material. The diameter of the mandrel shall be in accordance with Part 2. The ends of each of the windings shall be secured in such a manner that the two layers are maintained in intimate contact, and there is no loosening of the convolutions. A source of 60-hertz voltage of a substantially sinusoidal wave form shall be applied between the two wound layers.

3.8.6 Bend Method

Two undamaged 10-inch (250 mm) specimens of wire shall be elongated 10 percent and bent approximately 4 inches (10 mm) from each end, one flatwise and one edgewise, on a 90-degree angle over a mandrel as specified in Table 3-6 in the form of a ⌐ . The specimen shall be bent around the mandrel perpendicular to the axis of the mandrel and under sufficient tension to ensure a uniform bend. During the bending operation, extreme caution shall be observed to prevent external damage to the film coating such as may occur due to scraping, cutting, etc. A strip of 1/4 inch (6 mm) wide conductive adhesive metal foil tape shall be wrapped around the wire smoothly and firmly a minimum of 1-1/2 complete turns at the center of each bend. A source of 60-hertz voltage of a substantially sinusoidal wave form shall be applied separately and consecutively between each foil electrode and the conductor.

Table 3-6
BEND METHOD: MANDREL SIZES

Flatwise Bend-Thickness		Edgewise Bend-Width		Mandrel (±1%)	
inches	mm	inches	mm	inches	mm
0.050	1.27–1.29	—	—	0.200	5.08
0.050–0.063	1.30–1.60	—	—	0.250	6.35
0.064–0.075	1.63–1.90	—	—	0.300	7.62
0.076–0.088	1.93–2.24	0.076–0.088	1.93–2.24	0.350	8.89
0.089–0.100	2.26–2.54	0.089–0.100	2.26–2.54	0.400	10.2
0.101–0.125	2.57–3.18	0.101–0.125	2.57–3.18	0.500	12.7
0.126–0.150	3.20–3.81	0.126–0.150	3.20–3.81	0.600	15.2
0.151–0.187	3.84–4.75	0.151–0.187	3.84–4.75	0.750	19.1
0.188–0.219	4.78–5.56	0.188–0.219	4.78–5.56	0.900	22.9
0.220–0.250	5.59–6.35	0.220–0.250	5.59–6.35	1.00	25.4
0.251–0.310	6.38–7.87	0.251–0.310	6.38–7.87	1.25	31.8
—	—	0.311–0.375	7.90–9.52	1.50	38.1
—	—	0.376–0.435	9.55–11.1	1.75	44.4
—	—	0.436–0.500	11.1–12.7	2.00	50.8

3.9 CONTINUITY

Warning: Electrical Hazard - Extremely high voltages may be present. The design of the equipment must comply with good engineering practices and incorporate safety features. This includes grounding of metal parts to avoid electric shock and burns to trained personnel who are operating the equipment.

3.9.1 General

Definitions

a. Fault (or Discontinuity) - Any defect (or series of defects) in 1 inch (25 mm) of wire which allows sufficient current flow to activate the fault detection circuit.

Copyright National Electrical Manufacturers Association
Provided by IHS under license with NEMA
No reproduction or networking permitted without license from IHS
Not for Resale

b. Test Voltage - The open circuit DC voltage applied across the film insulation.
c. Fault Detection Current - The current flowing from the electrode sheave through the fault detection circuit.
d. Sensitivity - The minimum current that will activate the fault counter in the fault detection circuit.

In case of failure under prevailing laboratory conditions, another specimen of wire in an unbent and unstretched condition shall be dried for 20 ± 1 minutes in a forced air oven at 60°C ± 3°C (140°F ± 4.5°F). The sample shall be cooled to room temperature and testing in accordance with the foregoing procedure. Gloves shall be worn when preparing test specimens or during handling of magnet wire for this test.

3.9.2 High-Voltage Direct Current Continuity (14-44 AWG)

One hundred (+2, -0) feet (30.5 +0.6,-0 mm) of film-coated wire shall be passed over two energized stainless steel, freely rotating "V" grooved electrode sheaves at a speed of 60 ± 3 feet (18 ± 1 m) per minute. A grounded freely rotating metallic guide sheave shall be used before and after the electrode sheaves. The conductor shall be electrically grounded by means of either a ground terminal or a grounded take-up drum. Payoff equipment shall be designed to prevent damage to the wire being tested and provide only enough tension to maintain contact with the electrode sheaves. The open circuit test voltage maintained between the energized (positive polarity) electrode sheaves and the grounded conductor shall be as indicated in Table 3-7.

Table 3-7
TEST VOLTAGE (DC VOLTS ±5%)

Build Self-Bonding	Single Type 1	Heavy Type 2	Triple Type 3	Quad
Material/AWG Range				
Copper				
14–24	1000	1500	2000	2500
25–30	750	1000	1500	2000
31–35	500	750	1000	
36–44	350	500	750	
Aluminum				
14–24	750	1500	...	
25–28	500	1000	...	

The high voltage power supply shall be regulated and shall provide to the electrode sheaves filtered direct current voltage free of transient over-voltage "spikes." All voltage settings shall be checked with a high impedance device, such as an electrostatic voltmeter. Sufficient internal resistance shall be provided so that rapid collapse of the applied voltage occurs when a fault is detected. Rapid recovery of the voltage to the test level is also required.

The ground insulation for the electrode sheaves shall be a high resistivity material, non-hygroscopic, and easily cleaned, and shall be so dimensioned as to support a minimum of 3000 volts direct current indefinitely. All edges of the electrode sheaves shall be well rounded to minimize corona.

A surge dampening resistor of 4.7 megohms ± 10 percent shall be installed in the high voltage line at the electrode sheaves connection. No shielding shall be used on the high-voltage lead since a minimum capacitance to ground is sought during switching and counting events.

The test device shall include such wire handling equipment as will provide the wire speed stipulated and shall be capable of handling wire sizes 14 through 44 AWG. A length indicator with a preset shut-off feature shall be included so that exact lengths can be monitored. The drive shall have sufficient power to maintain speed under the heaviest load.

The steady state short circuit current shall be limited internally to 25 ± 5 microamperes at any test voltage setting. A 50 megohm fault resistance at the electrode sheaves shall not cause more than a 75 percent drop in voltage of the high voltage electrode sheaves at any voltage setting.

Copyright National Electrical Manufacturers Association
Provided by IHS under license with NEMA
No reproduction or networking permitted without license from IHS
Not for Resale

The sensitivity of the fault detection circuit shall be such that the threshold fault current will be as shown in Table 3-8, with a tolerance of ± 10 percent. The speed of response of the fault circuit shall be 4 to 6 milliseconds. The fault counter circuit shall be designed to repeat at a rate of 450 ± 45 counts per minute when bare wire is passed over the electrode sheaves.

Table 3-8
THRESHOLD FAULT CURRENT

DC Test Voltage, Volts (± 5%)	Threshold Fault Current, Microamperes (± 10%)
3000	16
2500	14
2000	12
1500	10
1000	8
750	7
500	6
350	5

The fault counter shall be a digital readout device such as an electromechanical counter or its electronic equivalent. Means for resetting the counter to zero shall be included. Additional recorder equipment for marking records of patterns is optional.

For sizes 14 through 24 AWG, dual high voltage electrode sheaves (See Figure 3-4) shall be constructed of stainless steel with an outside diameter of 1.69 ± 0.1 inches (43 mm) with a "V" groove such that the included angle will be 90 ± 3° and the root diameter 1.5 (+0, -0.01) inch (38 + 0, -0.25 mm).

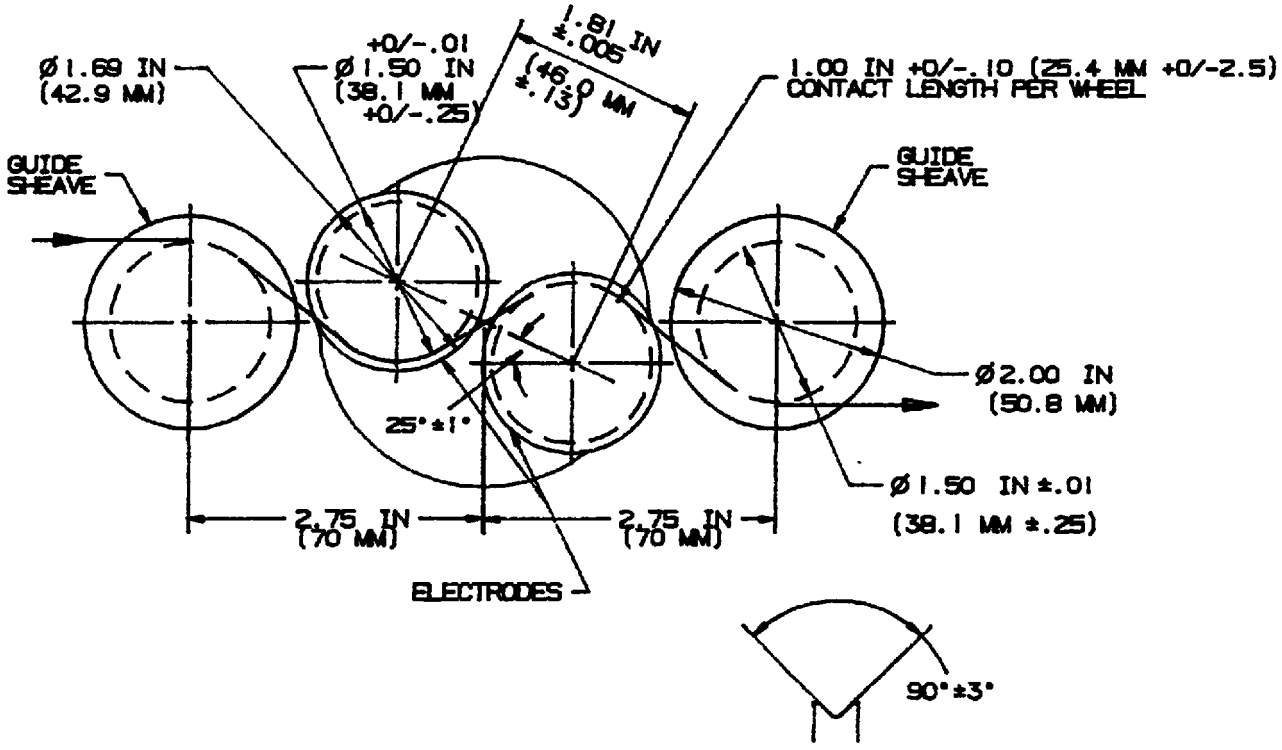

Figure 3-4
HIGH VOLTAGE DIRECT CURRENT CONTINUITY SHEAVES
14-30 AWG

Copyright National Electrical Manufacturers Association
Provided by IHS under license with NEMA
No reproduction or networking permitted without license from IHS
Not for Resale

The electrode sheave centers shall be separated by 1.81 ± 0.005 inches (46 ± 0.13 mm).

Each electrode sheave shall have a contact length of 1 (+0, -0.1) inch (25.4 mm +0, -2.5 mm). The electrode sheaves shall be placed between two grounded guide sheaves and on a line offset 25 ± 1° from a line intersecting the center of the guide sheaves. The two grounded guide sheaves shall be of the same material, and their centers shall be spaced 5.50 ± 0.01 inches (140 ± 0.25 mm) apart on a horizontal line. These grounded sheaves shall be constructed with an outside diameter of 2 ± 0.01 inches (51 ± 0.25 mm), with a "V" groove such that the included angle will be 45 ± 3° and the root diameter 1.5 ± 0.01 inches (38 mm ± 0.25 mm).

For sizes 31 through 44 AWG, smaller dual electrode sheaves (see Figure 3-5) shall replace the larger electrode sheaves described previously. These electrode sheaves shall be made of stainless steel and shall have an outside diameter of 1.13 ± 0.01 inch (28.7 ± 0.25 mm) and a "V" groove such that the included angle will be 90 ± 3° and the root diameter will be 1.00 (+0, -0.01) inch (25.4 +0, -0.25 mm). The centers of the dual electrode sheaves shall be separated by 1.25 ± 0.005 inch (32 ± 0.13 mm). The dual electrode sheaves will be adjusted to an angle resulting in 1.0 ± 0.1 inch (25.4 ± 2.5 mm) wire contact with each electrode sheave.

For sizes 25 through 30 AWG, either pair of high-voltage dual electrode sheaves may be used.

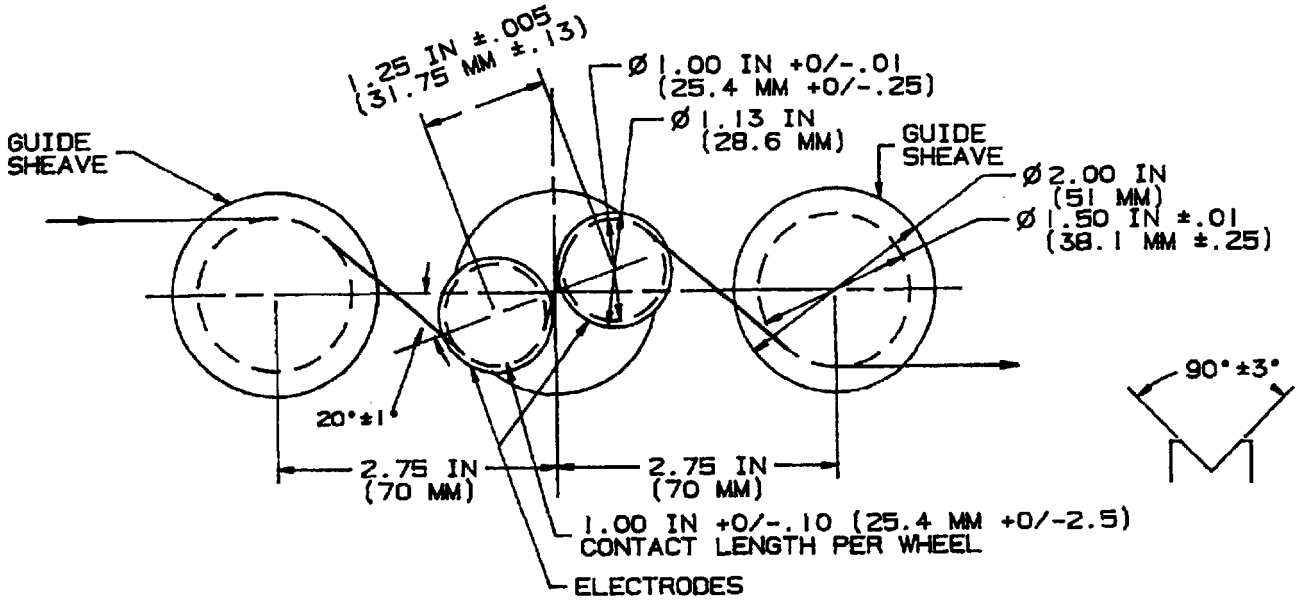

Figure 3-5
HIGH VOLTAGE DIRECT CURRENT CONTINUITY SHEAVES
25-44 AWG

3.9.3 Low Voltage Direct Current Continuity (45-56 AWG)

Warning: Chemical Hazard - Mercury has been recognized to be a hazardous substance by regulatory agencies. Primary routes of exposure are through inhalation and ingestion. The information contained in the Material Safety Data Sheet (MSDS) for mercury must be adhered to while using, handling, or disposing this material. Mercury spills need to be treated with great caution. Information on how to handle spills can be obtained from the supplier.

A 100 (+2, -0) feet (30.1 +0.6, -0 meters) of film coated wire shall be passed through a bath of mercury or other suitable material (see Figure 3-6) at a speed of 100 ±10 feet per minute (30.5 ± 3 meters). The test circuit shall be so arranged that the discontinuity indicating device will operate when the resistance between the conductor and the bath of mercury or other suitable material is 5,000 ohms or less but will not operate when the resistance is 10,000 ohms or more. The test circuit shall include a repeating circuit which will indicate 600 breaks

Copyright National Electrical Manufacturers Association
Provided by IHS under license with NEMA
No reproduction or networking permitted without license from IHS
Not for Resale

per minute ± 10 percent when a bare wire is passed through the bath of mercury or other suitable material. The direct current test voltage of 20 ± 1 volts shall be applied between the bath and the conductor. The number of discontinuities shall be recorded.

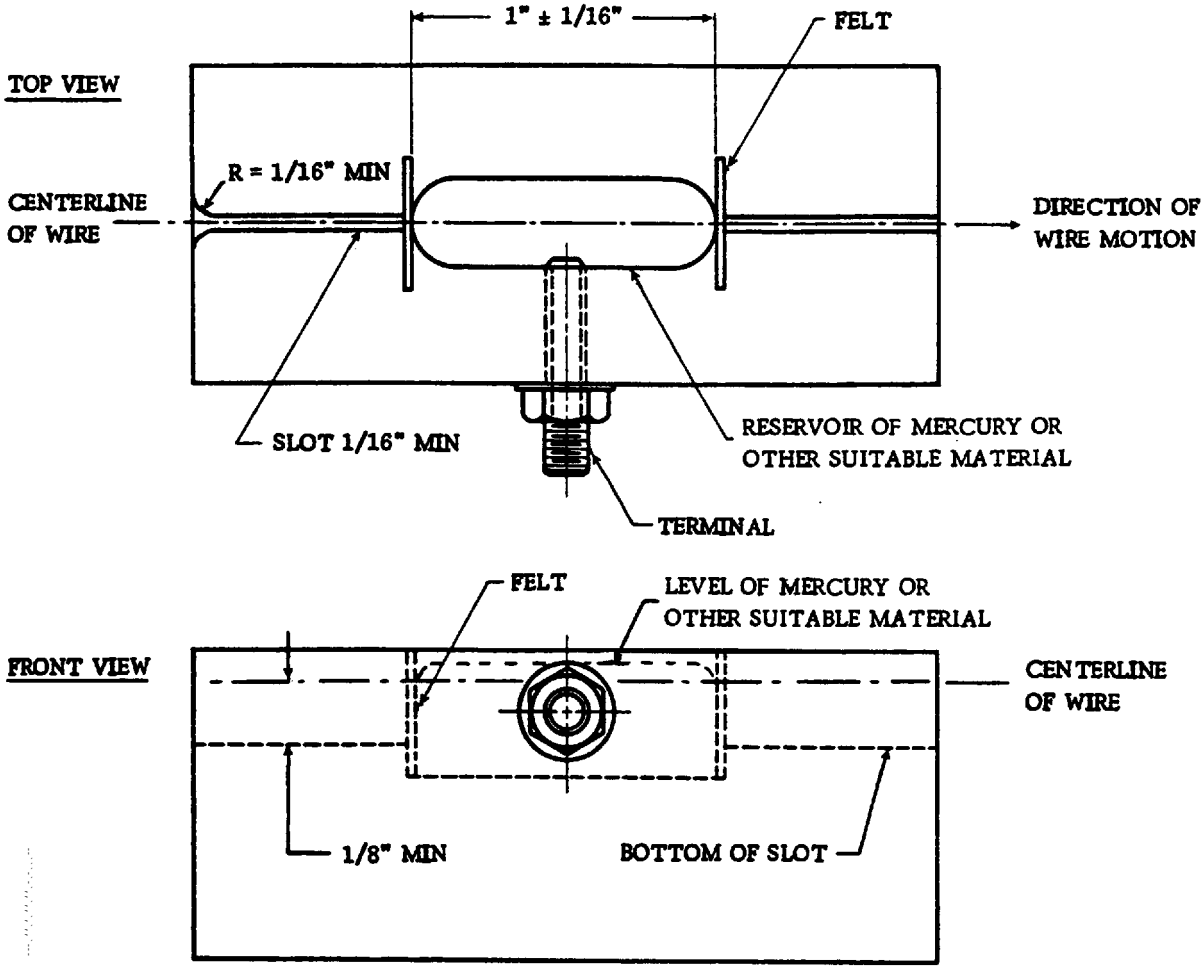

Figure 3-6
BATH OF MERCURY OR OTHER SUITABLE MATERIAL

3.10 COMPLETENESS OF CURE

3.10.1 Toluene-Ethanol Boil Method

Warning: Chemical Hazard - Regulatory agencies have established permissible exposure levels for toluene and ethyl alcohol. Primary routes for exposure are thorough absorption and inhalation. Consult Material Data Safety Sheets (MSDS) for proper handling, use, and disposal of these products.

A vessel shall be prepared containing a boiling mixture of 30 percent commercial grade 3 degree toluene and 70 percent denatured ethyl alcohol by volume, and fitted with a reflux condenser to prevent the loss of solvents from the mixture. A specimen which has been annealed by heating for 10 (+1, -0) minutes at 125 ± 3°C (257 ± 5°F) shall be immersed four to five inches (102 to 127 mm) in the mixture without bending for 5 (+0.5, -0) minutes.

Copyright National Electrical Manufacturers Association
Provided by IHS under license with NEMA
No reproduction or networking permitted without license from IHS
Not for Resale

After removal from the mixture, rectangular and round wire sizes 4 through 29 AWG shall be examined with normal vision. Sizes 30 through 44 AWG shall be examined by 6x to 10x magnification. Swelling of the film within 1/2 inch (12.7 mm) of the immersed end shall not constitute failure.

When testing self-bonding wire, the swelling, blistering, or removal of the self-bonding outer coating shall not be considered as failure.

3.10.2 Dissipation Factor Method

Warning: Chemical Hazard - Mercury has been recognized to be a hazardous substance by regulatory agencies. Primary routes of exposure are through inhalation and ingestion. The information contained in the Material Safety Data Sheet (MSDS) for mercury must be adhered to while using, handling, or disposing this material. Mercury spills need to be treated with great caution. Information on how to handle spills can be obtained from the supplier.

A minimum length of 12 inches (300 mm) of wire shall be wiped with a soft clean cloth or tissue and very carefully formed into an approximate "U" shape. For round sizes 4-50 AWG, the radius of any bend shall be not less than twice the diameter of the bare wire. For rectangular wire sizes, the radius of any bend shall be not less than five times the thickness of the bare wire or 1/2 inch (12.7 mm), whichever is larger.

The bent section shall be immersed at room temperature in mercury or another suitable electrode so that not less than 5 inches (127 mm) of wire is below the surface. The specimen shall be suitably held by an insulated holder, such as cork. The dissipation factor shall be measured at 60 to 1000 hertz by means of an automatic RLC bridge, or its equivalent, connected to the conductor of the specimen and the mercury or another suitable electrode.

In case of failure, another specimen shall be wiped with a soft clean cloth or tissue and conditioned by drying in a circulating air oven for 60 (+5, -0) minutes at 125 ± 3°C (257 ± 5°F). The wire shall be removed from the oven, cooled to room temperature, and tested in accordance with preceding paragraphs. Gloves shall be worn when preparing test specimens or during handling of magnet wire for this test.

3.11 RESERVED

3.12 COVERAGE

3.12.1 Mandrel Wrap Method

The specimen shall be wound ten turns around a mandrel equal to the diameter specified in Part 2, and examined with normal vision. Round wire test specimens shall be evenly wound in a close helix around the mandrel and under sufficient tension to ensure a compact winding. Care shall be exercised not to introduce an axial twist into the specimen.

3.12.2 Flat Bend Method

The specimen shall be bent flatwise 180 degrees around a mandrel equal to the diameter specified in Part 2, and examined with normal vision. The specimen shall be bent around the mandrel perpendicular to the axis of the mandrel and under sufficient tension to ensure a uniform bend.

3.13 SOLDERABILITY

Warning: Chemical Hazard - Lead has been recognized to be a hazardous substance by regulatory agencies. Primary routes of exposure are by inhalation and ingestion. The information contained in the Material Safety Data Sheet (MSDS) for lead, tin, flux, and alcohol must be adhered to while using, handling, or disposing of these products. Adequate ventilation or forced exhausting of solder pot vapors and products of decomposition from various solderable insulations may be necessary to comply with environmental regulations.

Copyright National Electrical Manufacturers Association
Provided by IHS under license with NEMA
No reproduction or networking permitted without license from IHS
Not for Resale

Warning: Thermal Hazard - Care must be exercised in removing test specimens from the solder pot to avoid skin burns.

3.13.1 General

A 60/40 tin-lead solder conforming to ASTM B 32, Grade B shall be used for all tests. Any dross which forms must be removed from the surface of the solder before each test.

The solder pot shall have a volume sufficient to ensure maintenance of a uniform solder temperature during specimen immersion. The temperature shall be measured within 1/4 inch (6 mm) from the immersed end of the specimen. The temperature must be controllable with ± 5°C (9°F) of the relevant specification temperature indicated in Part 2.

In the event the specimen being tested does not meet the requirements of Part 2 at the specified solder time, a new specimen shall be dipped in a suitable rosin-alcohol flux (10 parts of Grade WW water white rosin mixed with 90 parts of denatured ethyl alcohol by weight) prior to retesting.

3.13.2 Self-Supported Specimen Method (14-36 AWG)

A single-strand, straight length of wire shall be cut to a 6 inch (152 mm) test specimen. The specimen prepared for test shall be immersed vertically to a depth of 1-1/4 to 1-5/16 inches (32 to 33 mm) at the center of the solder pot for the time equal to or less than indicated in Part 2. After removal from the pot, the lower 1/2 inch (13 mm) of the segment immersed in the pot shall be examined under 6x to 10x magnification.

3.13.3 Fixture-Supported Specimen Method (37-56 AWG)

A specimen of wire shall be supported by means of a suitable carrier which allows the wire to be held free for at least 1.3 inches ± 0.2 inches (33.0 ± 5.1 mm) between the points of support. The material used for the carrier shall be such that the solder bath does not undergo any contamination. The dimensions of the carrier shall not lead to appreciable changes in the bath temperature during immersion. A suggested carrier configuration is shown in Figure 3-7.

The specimen and fixture so prepared shall be immersed vertically to a depth of 1.25 to 1.50 inches (32 mm to 38 mm) at the center of the solder pot for the time equal to or less than that indicated in Part 2. After removal from the pot, examination shall be made under 15x magnification and shall be restricted to the center 1.0 ± 0.1 inch (25.4 ± 2.5 mm) free length section between the supports. Wire specimens finer than 52 AWG may be double stranded and twisted two to five times to avoid breakage during immersion.

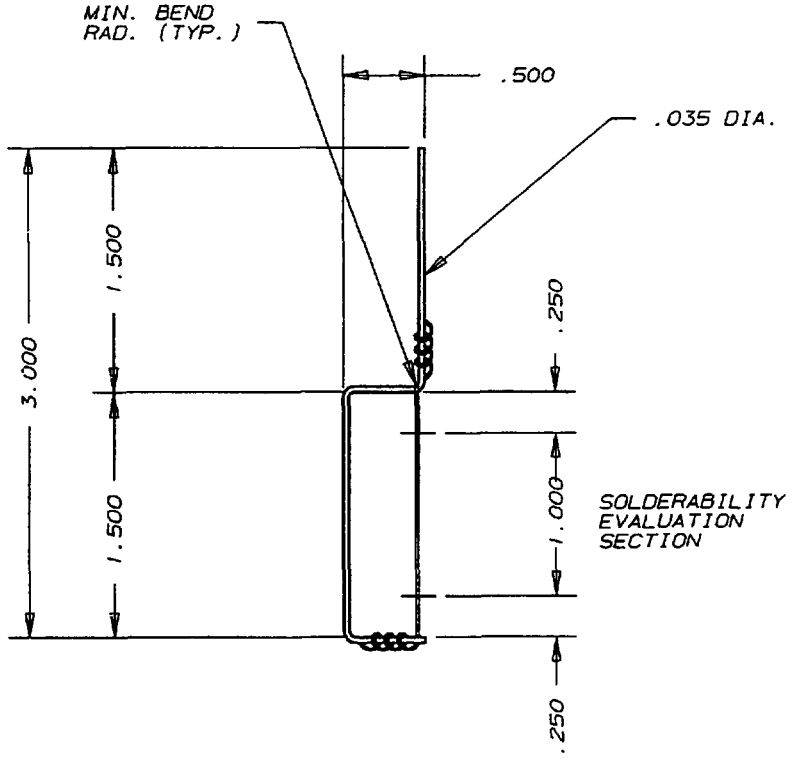

Figure 3-7
SOLDERABILITY TEST SPECIMEN FIXTURE

Copyright National Electrical Manufacturers Association
Provided by IHS under license with NEMA
No reproduction or networking permitted without license from IHS
Not for Resale

PERIODIC CONFORMANCE TESTS

3.50 THERMOPLASTIC FLOW

Warning: Thermal Hazard - Care must be exercised in removing test specimens from the oven to avoid skin burns.

3.50.1 Apparatus

The thermoplastic flow tester shall be capable of exerting a constant load perpendicular to, and directly over, the right-angle crossover of the specimen. The tester shall include a control thermocouple of suitable temperature range and a pyrometer to indicate the temperature measured by the control thermocouple. The actual specimen temperature at each test position under the load at the crossover position shall be measured throughout the expected temperature range by a calibrated thermocouple-pyrometer, or other suitable measuring device, and compared to the control or indicated temperature. The resulting temperature differences shall be used to appropriately correct the indicated thermoplastic flow temperature. The testing chamber shall be of suitable size to maintain a temperature rise at a rate of 10°C (18°F) to 45°C (81°F) per minute to not less than 50°C (90°F) below the temperature specified in Part 2 and 5 ± 1°C (9°F) per minute temperature rise from that point to failure. The failure detector shall be so constructed that a current flow of 20 ± 10 milliamperes at 115 volts 60 hertz between the crossed wires of the specimen will indicate failure.

3.50.2 Procedure

Thermoplastic flow periodic conformance values for all film insulated sizes and shapes shall be evaluated using 18 AWG heavy [or Type 2] or 36 AWG heavy [or Type 2] round film insulated samples. The specimen shall consist of two lengths of wire positioned at right angles to each other in the apparatus. The specimen shall be carefully loaded at 2000 grams (± 2%)(19.6N) for 18 AWG or 250 grams (± 1%)(2.45N) for 36 AWG wire. The temperature shall be increased at 10° (18°F) to 45°C (81°F) per minute until 55 ± 5°C (99 ± 9°F) below the thermoplastic flow temperature specified in Part 2 is attained and then raised 5 ± 1°C (9 ± 2°F) per minute until failure of the specimen occurs. The indicated temperature, corrected in accordance with 3.50.1, shall be taken as the thermoplastic flow temperature of that specimen. For 18 AWG wire, five specimens shall be tested per sample, and the median (the third highest value) shall be the thermoplastic flow temperature. For 36 AWG wire, nine specimens shall be tested per sample, and the median (the fifth highest value) shall be the thermoplastic flow temperature.

3.50.3 Additional Test Load Information

If an evaluation of the thermoplastic flow characteristics of sizes other than 18 or 36 AWG is desired; equivalent test data can be obtained with the wire size ranges test load as follows in Table 3-9:

Table 3-9
RECOMMENDED SIZE RANGE TEST LOADS

Size Ranges, AWG	Recommended Load (grams)
14–18	2000
19–24	1000
25–26	600
27–29	300
30–36	250

3.51 SOLUBILITY

Warning: Chemical Hazard - Follow Material Safety Data Sheets (MSDS) instructions on using, handling, and disposal of solvents specified in Part 2.

Copyright National Electrical Manufacturers Association
Provided by IHS under license with NEMA
No reproduction or networking permitted without license from IHS
Not for Resale

3.51.1 Round Film Coated Wire

3.51.1.1 Preparation of Specimens - Sizes 18 and 36 AWG

Specimens of unstretched and unbent film coated wire, each 12 inches (305 mm) long, which have been stress annealed for 10 (+1, -0) minutes at 150 ± 3°C (302 ± 5°F) shall be immersed for at least 6 inches (152 mm), without bending, for 30 (+5, -0) minutes in the liquids specified in Part 2 and maintained at 60 ± 2°C (140 ± 4°F). Each specimen shall be immersed in one liquid only.

3.51.1.2 Needle Scrape - Size 18 AWG Heavy (or Type 2)

The specimens shall then be removed from the solvent and tested within 2 minutes, but not less than 1 minute, on a device which scrapes the surface of the film coating at right angles to the length of the wire with a 0.016 inch (0.406 mm) diameter steel needle loaded with 580 grams (± 2%) (5.7N) when testing copper and 340 grams (± 2%) (3.33N) when testing aluminum wire. (See Figure 3-8). The specimens shall be wiped with a clean cloth or tissue to remove any liquid and shall be straightened by hand, without stretching, to remove kinks. After the wire is inserted in the test apparatus, the weighted needle shall be lowered gently to the surface of the film coating and the wire scraped at 2 inches (51 mm) per second ± 10% along the portion that was immersed. Exposure of the bare conductor shall be indicated by an electrical circuit having a potential of 7.5 ± 1.5 volts between the needle and the conductor.

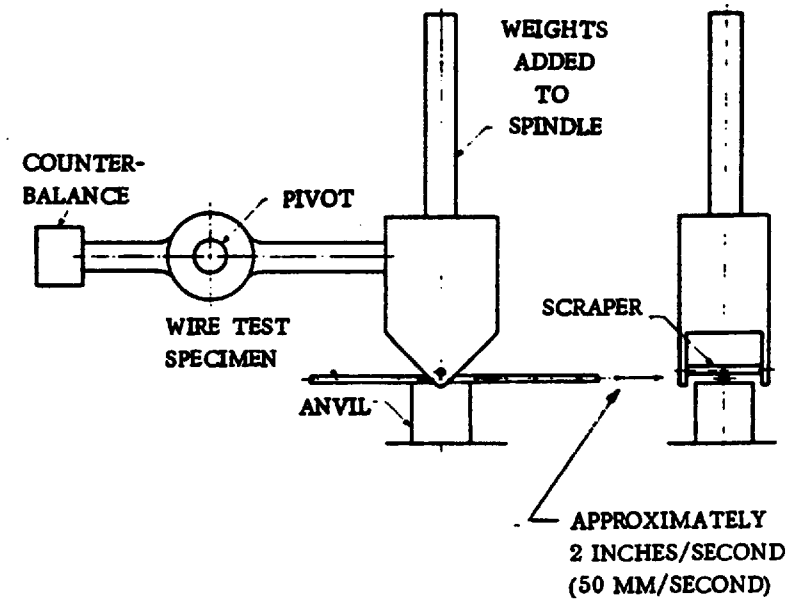

Figure 3-8
MACHINE FOR SOLUBILITY SCRAPE

3.51.1.3 Cheesecloth Wipe - Size 36 AWG Heavy (or Type 2)

The specimens shall then be removed from the solvent and, within 2 minutes but not less than 1 minute, drawn once between the folds of four thicknesses of cheesecloth pressed firmly between the forefinger and the ball of the thumb. Any removal of the coating caused by kinks or mechanical injury shall not be considered as failure to meet the requirements of Part 2.

3.51.2 Rectangular Film Coated

Specimens of unstretched and unbent film coated wire, each 12 inches (305 mm) long, which have been stress annealed for 30 (+5, -0) minutes at 150 ± 3°C (302 ± 5°F) shall be immersed at least 6 inches (150 mm), without bending, for 30 (+5, -0) minutes in the liquids specified in Part 2 and maintained at 60 ± 2°C, (140 ± 4°F). Each specimen shall be immersed in one liquid only. The specimens shall then be tested in accordance with 3.51.1.3

Copyright National Electrical Manufacturers Association
Provided by IHS under license with NEMA
No reproduction or networking permitted without license from IHS
Not for Resale

3.52 DIELECTRIC STRENGTH AT RATED TEMPERATURE

3.52.1 Preparation of Specimens

Periodic conformance values for all film insulated sizes and shapes shall be evaluated using 18 AWG heavy [or Type 2] or 36 AWG heavy [or Type 2] round film insulated samples. Five specimens of 18 and/or 36 AWG heavy film coated wire shall be prepared in accordance with 3.8.3

3.52.2 Test Procedure

Warning: Electrical Hazard - Extremely high voltage may be present. Personnel performing the test must be adequately trained and qualified. The design of the test equipment must comply with good engineering practices and incorporate safety procedures. This includes grounding of metal parts to avoid electric shock and burns to operators performing the test.

Warning: Thermal Hazard - Care must be exercised in handling the wire samples at elevated temperatures to avoid skin burns.

Warning: Chemical Hazard - Ozone gas may be generated under high voltage conditions during testing. Test area must have adequate ventilation.

The temperature of a circulating air oven shall be raised to the temperature equivalent to the thermal class rating (see Part 2) of the specimen ± 2°C (4°F). Each of five specimens shall be placed in a suitable holder or holders, and they shall then be placed in the oven and connected to high-voltage feed-through connectors.

Fifteen minutes, but not more than 30 minutes, after the oven again reaches the temperature equivalent to the thermal class rating of the specimen ± 2°C (4°F), a source of 60-hertz voltage as described in 3.8.1 shall applied to the specimen through the feed-through connector at the oven. The voltage rise and the breakdown voltage shall be measured in accordance with 3.8.3 and the five results averaged.

3.53 (RESERVED)

3.54 TRANSFORMER OIL RESISTANCE AND HYDROLYTIC STABILITY

Warning: Thermal Hazard - Care must be exercised in handling the apparatus and wire samples at elevated temperatures to avoid skin burns.

3.54.1 Principal of Test

The transformer oil resistance and hydrolytic stability of all film insulated sizes and shapes shall be evaluated using 18 AWG heavy build magnet wire. It is recognized that water, a breakdown product of cellulose, is the primary agent that causes deterioration of the magnet wire film-insulation in liquid-filled electrical equipment. Sufficient time and temperature are required to break down the cellulose. This test method measures the effect of this generated moisture in a sealed test environment.

3.54.2 Test Apparatus

This test requires the following equipment: tubes - 1 in. by 12 in. (25 mm by 305 mm) capable of being sealed, a forced air oven in compliance with ASTM Spec D 2436, a pressure vessel, stainless steel, glass or glass-lined capable of withstanding a minimum pressure of 870 psi (6.0 MPa) and equipped with a pressure tube assembly containing a rupture disk set at 800 psi (5.5 MPa) maximum. The inside dimensions must be such that the specimens are completely immersed in the insulating liquid. The forced air oven must be capable of providing a constant temperature of 150 ± 3°C (302 ± 5°F) for 1000 ± 10 hours.

Copyright National Electrical Manufacturers Association
Provided by IHS under license with NEMA
No reproduction or networking permitted without license from IHS
Not for Resale

3.54.3 Short Term Exposure Test

Prepare two tubes with 80 ± 1 ml of transformer oil and to only one tube add 0.19 to 0.24 ml (approximately 4 or 5 drops) of distilled water. The tube containing no water will provide the control data. Place six straight 8 ± 0.5 in. (203 ± 12 mm) unelongated specimens of 18 AWG heavy film-insulated magnet wire in each tube, seal the tubes, and place in an oven set at 150 ± 3°C (302 ± 5°F) for 24 ± 0.5 hours. After conditioning for 24 hours, remove the tubes and cool to room temperature before opening. After removal from the tubes inspect the specimen for loss of film integrity.

3.54.4 Long Term Exposure Test

This procedure is written for a 400 ml vessel [1] which requires approximately 302 in. (7671 mm) of 18 AWG heavy film-insulated magnet wire. Table 3-10 shows the pressure vessel components as a percent of the vessel volume.

Prepare 10 dielectric twisted pair specimens in accordance with 3.8.3: five flexibility specimens elongated by sudden jerk to 20% and wrapped on a 3d mandrel in accordance with 3.3.1, and five specimens elongated to 10% in accordance with 3.4.

Table 3-10
PRESSURE VESSEL COMPONENTS

Component	Pressure Vessel Volume %
Transformer Oil	65
Kraft Paper	4
Film Insulation	0.26
Steel	0.5

The pressure vessel shall contain the above prepared wire samples and the components listed in Table 3-10. Note: it is necessary to add the remaining quantity of film-insulated magnet wire from the original 302 in. wire sample in order to bring the total volume of enamel to the specified value of 0.26% volume.

Dry a quantity of insulating liquid, in excess of 65% of the total volume of the pressure vessel by heating to 110 ± 3°C (230 ± 5°F) and hold for 30 ± 0.5 min. and then de-aerate under a vacuum system at 15 ± 0.5 mm of mercury for 10 ± 1 min. Process dielectric liquids that vaporize readily with controlled degassing.

Place the clean pressure vessel containing the test specimens, the Kraft paper, and metal in an oven at 105 ± 3°C (221 ± 5°F) for 24 ± 0.5 hrs. to dry and then place under the vacuum system at 45 ± 1 mm of mercury for 10 ± 1 min. Open the pressure vessel while still hot, and carefully add the dry de-aerated insulating liquid. Ensure all test materials are immersed in the insulating liquid. Close the vessel and either evacuate to remove the air above the oil, or evacuate and fill with nitrogen or other inert atmosphere and seal. Age the sealed system in an oven at 150 ± 3°C (302 ± 5°F) for 1000 ± 10 hours.

At the end of 1000 hrs., cool the pressure vessel to room temperature, open, and remove one-half of the dielectric specimens, one at a time, and test to breakdown. Remove the remaining dielectric specimens from the pressure vessel, dry for 30 (+5, -0) min. at 125 ± 3°C (257 ± 5°F), and then test to breakdown.

NOTE—Hydrolytic degradation or water absorption can cause loss of dielectric breakdown strength of insulating films. If only absorption occurs, drying the specimens prior to dielectric measurement will produce a recovery in dielectric strength.

Remove the flexibility and elongation specimens from the pressure vessel, wipe clean of excess oil, and visually inspect for film-insulation defects.

[1] For different sized vessels refer to ASTM D 1676 to determine the volume of the components.

Copyright National Electrical Manufacturers Association
Provided by IHS under license with NEMA
No reproduction or networking permitted without license from IHS
Not for Resale

3.55 REFRIGERANT (R-22) EXTRACTION

Warning: Mechanical Hazard - Prior to use, the "over-pressure" control switch should be checked to ensure it is functioning properly. It is recommended that the heating systems be equipped with a device designed to deactivate the system when the pressure inside the pressure vessel reaches a prescribed value. Also, for additional protection, a device designed to deactivate the heating system when the water flow through the condenser coil is interrupted deserves consideration.

Warning: Chemical Hazard - Chemicals used in this test have been classified as hazardous by regulatory agencies. Primary routes of exposure are through absorption and inhalation. Follow instructions provided in the Material Safety Data Sheets (MSDS) for the safe handling, use, and disposal of these chemicals.

NOTE—Due to environmental concerns, alternate refrigerants are being proposed for the replacement of R-22. These alternate materials will most likely have different parameters, i.e., critical temperature, and cannot be substituted directly for R-22 in the test method described below. In all probability, different time and temperature requirements will be necessary to satisfactorily complete the procedure. For additional information, please contact the refrigerant manufacturer, or your magnet wire manufacturer, or both.

3.55.1 Preparation of Specimens

Eight specimens of 18 AWG heavy film-coated wire, each containing 0.6 ± 0.1 gram of insulation, shall be made into coils of seventy turns. The coils shall be annealed in a forced draft oven at 150 ± 3°C (302 ± 5°F) for 15 (+1, -0) minutes, cooled to room temperature, thoroughly washed in methylene chloride and dried in a forced draft oven at 150 ± 3°C (302 ± 5°F) for 15 (+1, -0) minutes. After cooling for 30 (+5, -0) minutes, the eight coils shall be weighed together to the nearest 0.0001 gram. The combined weight of the eight specimens shall be the "total initial weight".

3.55.2 Environmental Conditioning

The eight specimens shall be placed in a 450-milliliter modified Wiley siphon cup (see Figure 3-9) and suspended from the condenser coil (see Figure 3-10) in the top portion of a 2000-milliliter pressure vessel (similar to Parr autoclave #4632 pressure capacity 3000 psi or the equivalent)(20.7 MPa) below the condenser (see Figure 3-11). The pressure vessel shall be assembled and charged with 700 ± 25 grams of monochlorodifluoromethane (R-22). The pressure vessel shall be placed in a controlled heating system, and the condenser water supply and drain line properly connected. The temperature of the controlled heating system and the water flow running through the condenser shall be adjusted to maintain a reflux rate of 20 to 25 cup discharges per hour for six hours. [A pressure control range of 500 to 580 psig. (3.4 to 4.0 MPa) has been experienced with R-22.] The autoclave pressure shall be kept at last 60 psig (0.4 MPa) below the critical pressure of R-22 (722 psi absolute)(4.98 Mpa). After completion of the extraction, the pressure vessel shall be removed from the heating source and cooled with solid carbon dioxide (dry ice) to liquefy the refrigerant.

Table 3-11
Typical Siphon Cup Dimensions

Description	mm	inches (approximate)
Height of cup	82	3.23
Diameter of cup	84	3.31
Diameter of tubing	5	0.20

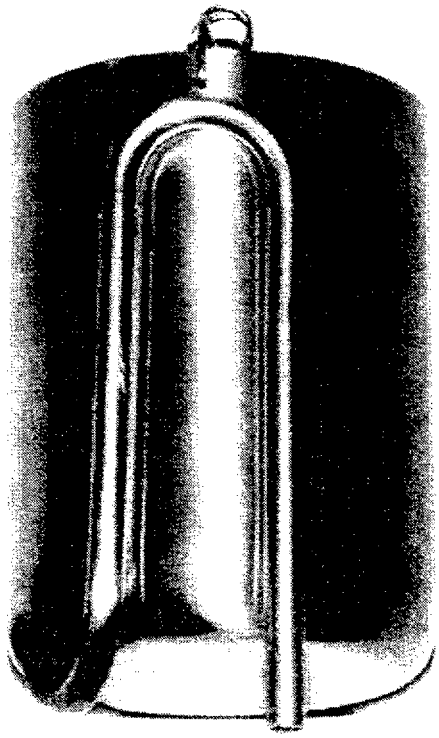

Figure 3-9
REFRIGERANT EXTRACTABLE SIPHON CUP

Copyright National Electrical Manufacturers Association
Provided by IHS under license with NEMA
No reproduction or networking permitted without license from IHS
Not for Resale

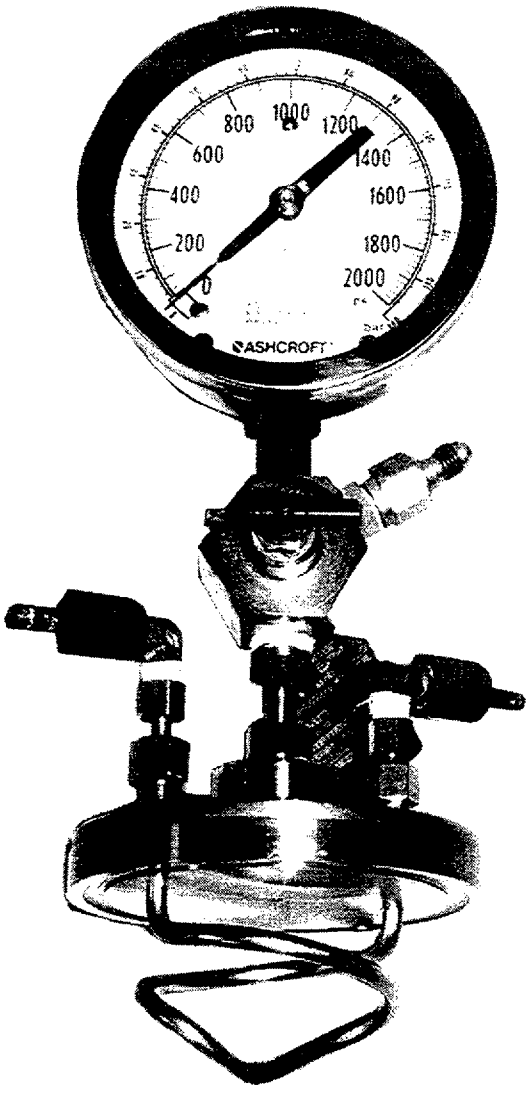

Figure 3-10
CONDENSER COIL

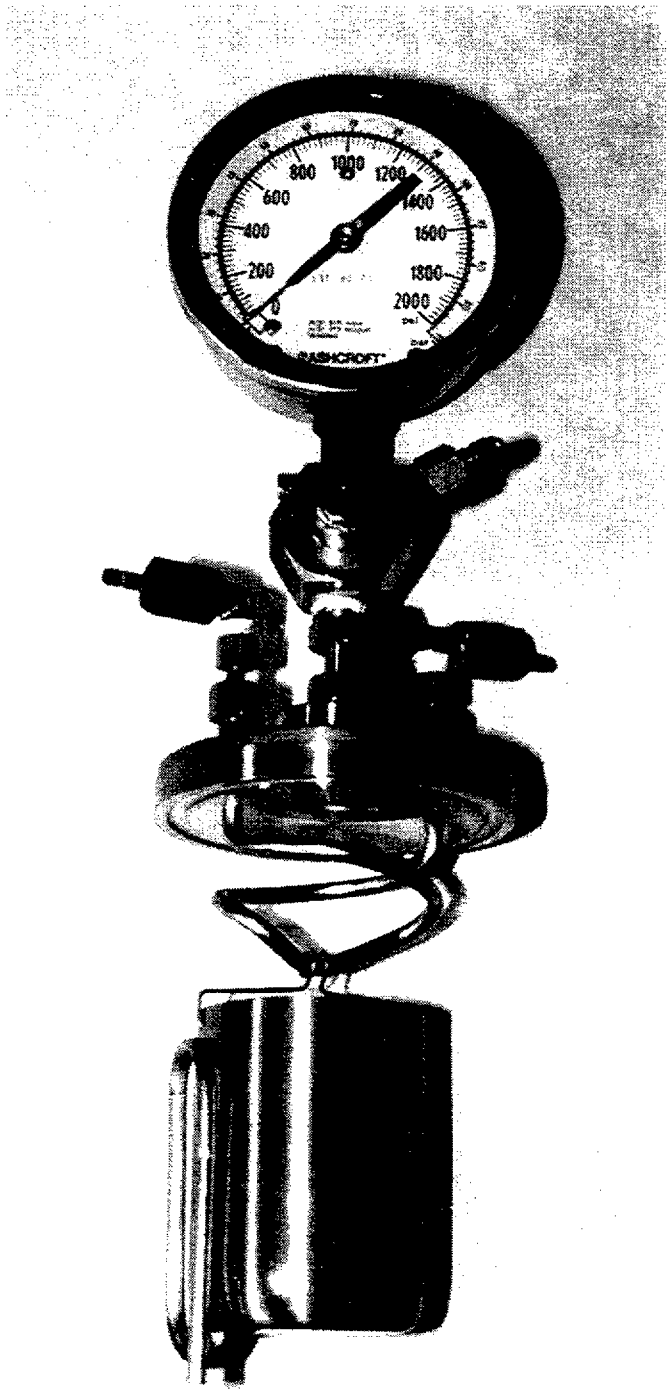

Figure 3-11
CONDENSER COIL SIPHON CUP ASSEMBLY

3.55.3 COLLECTING RESIDUE

The pressure vessel shall be discharged carefully and opened. The coils and siphon cup shall be rinsed with methylene chloride and the rinse shall be poured into the pressure vessel. The refrigerant shall be evaporated slowly to within approximately 1/4 inch (6 mm) of the bottom of the vessel. The walls of the pressure vessel shall be washed with two successive rinses of 100 milliliters each of methylene chloride. The solvents shall be evaporated under a hood or in a well ventilated area to within 1/4 inch (6 mm) of the bottom of the vessel. The liquid sample shall then be transferred to a pre-weighed, pre-dried, aluminum weighing dish, using a rinse consisting of 15 milliliters of methylene chloride. The liquid shall then be evaporated to dryness at 150 ± 3°C (302 ± 5°F) for 60 (+5, -0) minutes, and then cooled to room temperature in a desiccator.

Copyright National Electrical Manufacturers Association
Provided by IHS under license with NEMA
No reproduction or networking permitted without license from IHS
Not for Resale

3.55.4 Determinations of Results

The aluminum dish, with a residue, shall be weighed to the nearest 0.0001 gram. The initial tare weight of the aluminum dish shall be subtracted. The difference is the "total residue weight" of the original coils.

The insulation shall be removed from the original coils by a suitable chemical means that will not damage the conductor, and the bare conductors dried for 15 (+1, -0) minutes at 150 ± 3°C (302 ± 5°F). The conductors shall be cooled to room temperature in a desiccator and weighed immediately to the nearest 0.0001 gram. The sum of the weights of the coils is the "total conductor weight."

The percent extractables shall be calculated as follows:

$$\text{Percent Extractibles} = \frac{\text{Total residue weight}}{\text{Total initial weight} - \text{Total conductor weight}} \times 100$$

3.56 RETAINED DIELECTRIC AFTER R-22 CONDITIONING

Warning: Mechanical Hazard - Prior to use, the "over-pressure" control switch should be checked to ensure it is functioning properly. It is recommended that the heating systems be equipped with a device designed to deactivate the system when the pressure inside the pressure vessel reaches a prescribed value. Also, for additional protection, a device designed to deactivate the heating system when the water flow through the condenser coil is interrupted, deserves consideration.

Warning: Chemical Hazard - Chemicals used in this test have been classified as hazardous by regulatory agencies. Primary routes of exposure are through absorption and inhalation. Follow instructions provided in the Material Safety Data Sheets (MSDS) for the safe handling, use, and disposal of these chemicals.

Adequate ventilation is necessary since ozone gas may be generated during the dielectric strength test.

NOTE—Due to environmental concerns, alternate refrigerants are being proposed for the replacement of R-22. These alternate materials will most likely have different parameters, i.e., critical temperature, and cannot be substituted directly for R-22 in the test method described below. In all probability, different time and temperature requirements will be necessary to satisfactorily complete the procedure. For additional information, please contact the refrigerant manufacturer, or your magnet wire manufacturer, or both.

Five twisted pairs of 18 AWG heavy film-coated wire shall be prepared in accordance with 3.8.3 and conditioned in a forced draft oven at 150 ± 3°C (302 ± 5°F) for 4 hours (+5, -0) minutes.

The conditioned specimens shall be loaded in a pressure vessel (Parr autoclave #4632, or the equivalent) having a 2000-milliliter capacity, an inside diameter of approximately 4 inches (102 mm), and a pressure capacity of at least 3000 psig (20.7 MPa). The loaded pressure vessel shall be scaled, weighed, and evacuated to 200 ± 20 mm (30 ± 3 Pa) of mercury.

The pressure vessel shall then be filled with 1.4 kilograms ± 50 grams of monochlorodifluoromethane (R-22). The loaded pressure vessel shall be heated to obtain a pressure gage reading of 600 ± 50 psig. (4.20 ± 0.35 MPa). The pressure shall be maintained for 72 ± 1 hours, after which time the pressure vessel shall then be removed from the heat source and the refrigerants carefully released. When the pressure in the vessel falls to 10 psig. (0.007 MPa) or less, the cover shall be removed and the twisted pairs transferred within 60 seconds to a forced draft oven at 150 ± 3°C (302 ± 5°F). The specimens shall remain in the oven for 10 (+1, -0) minutes.

After the specimens have been removed from the oven and cooled to room temperature, the dielectric strength of the twisted pairs shall be determined in accordance with 3.8.1. The five readings shall be recorded and averaged.

Copyright National Electrical Manufacturers Association
Provided by IHS under license with NEMA
No reproduction or networking permitted without license from IHS
Not for Resale

3.57 BOND

3.57.1 Preparation of Specimens

3.57.1.1 Sizes 18 and 26 AWG

The appropriate mandrel shall be selected from Table 3-12 and sprayed with a suitable release agent. (A fluorocarbon spray, or silicone spray, have been found to be satisfactory). (This sentence is classified as Authorized Engineering Information). The wire shall be dereeled over the end of the spool as a 3-inch single-layer coil is wound onto the prepared mandrel, using a winding tension not to exceed that shown in Table 3-12. The coil and mandrel shall be vertically mounted in a suitable holder with the free end of the coil at the top. The specified bonding weight from Table 3-12 shall be placed on the vertically mounted coil, providing a downward force during bonding. (See Figure 3-12). Three coils shall be prepared.

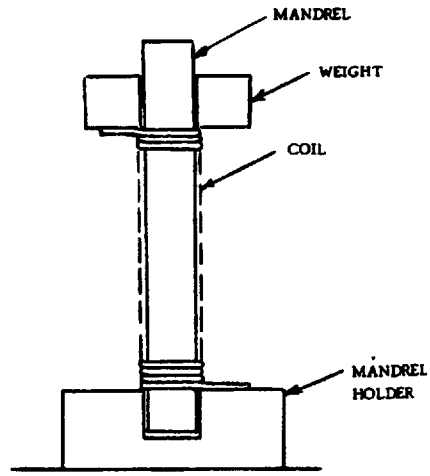

Figure 3-12
BOND COIL PREP FIXTURE

3.57.1.2 Size 36 AWG

The appropriate mandrel shall be selected from Table 3-12 and sprayed with a suitable release agent (see 3.57.1.1). The wire shall be dereeled over the end of the spool as a coil of fifty continuous turns are wound onto the prepared mandrel. The coils and mandrel shall be vertically mounted in a suitable holder. The specified bonding weight from Table 3-12 shall be placed on the vertically mounted coils as described in 3.57.1.1. Three coils shall be prepared.

Table 3-12
TEST PARAMETERS

	Mandrel Diameter*		Maximum Winding Tension		Bonding Load*		Test Load After Heat Bonding		Test Load After Solvent Bonding	
AWG	inches	mm	grams	Newtons	grams	Newtons	kilograms	Newtons	kilograms	Newtons
18	0.250	6.35	1220	12.0	408.0	4.00	9.0	88.3	4.5	44.1
26	0.157	3.99	200	2.0	76.0	0.75	1.6	15.7	0.80	7.85
36	0.039	0.99	12.2	0.12	15.3	0.15	0.025	0.25	0.0122	0.12

* Tolerance ± 2%

3.57.2 Heat and Solvent Bonding

3.57.2.1 Heat Bonding - Sizes 18, 26, and 36 AWG

Warning: Thermal Hazard - Care must be exercised in removing the holder assembly from the oven at elevated temperatures to avoid skin burns.

The holder assembly shall be placed in a forced air oven for 60 minutes (+5, -0) minutes at 150 ± 3°C (302 ± 5°F). The assembly shall be removed from the oven and cooled to room temperature.

The coils shall be removed from the mandrels, inspected for breaks or physical damage, and tested in accordance with 3.57.3 and/or 3.57.4.

3.57.2.2 Solvent Bonding - Sizes 18,26, and 36 AWG

Warning: Chemical Hazard - Adequate ventilation must be provided to remove hazardous fumes generated from the solvents used for bonding. Primary routes of entry are by absorption and inhalation. Consult Material Safety Data Sheets (MSDS) of the solvent being used to determine proper handling, use, and disposal procedures.

Copyright National Electrical Manufacturers Association
Provided by IHS under license with NEMA
No reproduction or networking permitted without license from IHS
Not for Resale

The specimen shall be dipped into the specified solvent for approximately 5 seconds. The bonded coil shall be immediately placed in the holder with the specified bonding weight from Table 3-12 and allowed to dry for 60 minutes (+5, -0) miutes at room temperature.

The coils shall be removed from the mandrels, dried for 15 (+1, -0) minutes at 100 ± 3°C (212 ± 5°F), inspected for breaks or physical damage, and tested in accordance with 3.57.3.

3.57.3 Room Temperature Bond Test Procedure

3.57.3.1 Sizes 18 and 26 AWG

Each 3-inch test coil shall be placed in a bond strength test fixture identical to that shown in Figure 3-13 with regard to all dimensions and radii shown. The appropriate test weight, as shown in Table 3-12 shall be the total load to be applied to the center of the coil, which includes the knife edge, support, and added weight. The load shall be lowered gently and allowed to hang for 5 seconds.

A stress-strain analyzer shall be permitted to be used to apply an increasing load. The cross-head speed shall be between 0.5 and 1 inch (12 mm and 25 mm) per minute. Separation of the first or last turn shall be disregarded.

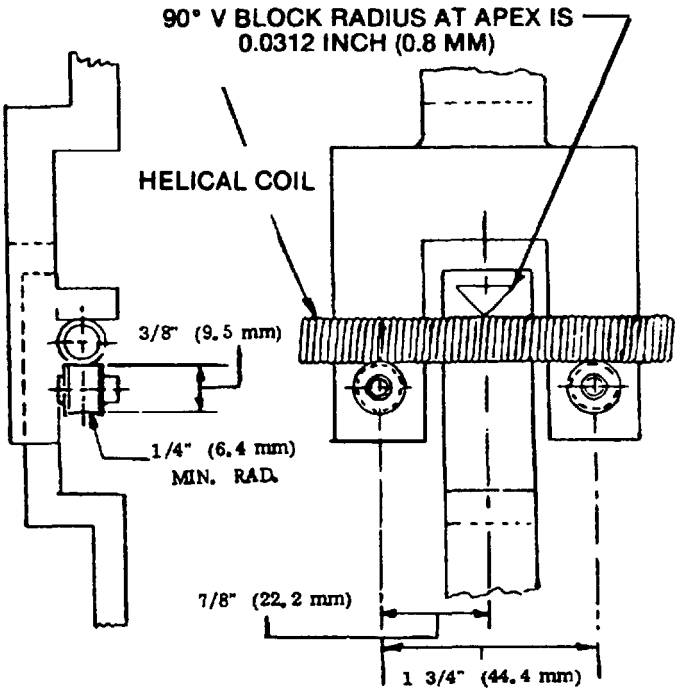

Figure 3-13
BOND STRENGTH TEST FIXTURE

3.57.3.2 Size 36 AWG

Each coil shall be hung by one of its ends and loaded with the weight indicated in Table 3-12. (See Figure 3-14). When attaching the load, any additional shock must be avoided. The weight shall be allowed to hang for 5 seconds. Separation of the first or last turn shall be disregarded.

3.57.4 Elevated Temperature Bond Test Procedure

The bond test fixture as shown in Figure 3-13 shall be placed in a recirculating oven capable of maintaining 250 ± 2°C. The oven temperature should be stabilized at the set temperature ± 2°C. The specimen to be tested shall then be placed in the fixture in the oven. 15 minutes but not more than 30 minutes after the oven again reaches set temperature ± 2°C, the sample shall be tested in accordance with 3.57.3.1. A stress strain analyzer shall be permitted to be used to apply an increasing load until the sample is broken. The cross-head speed shall be between 0.5 and 1 inch (12 and 25 mm) per minute. The peak load is recorded.

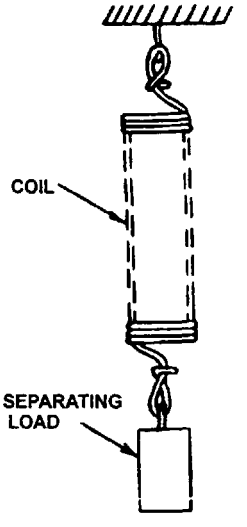

Figure 3-14
BOND TEST FIXTURE

Copyright National Electrical Manufacturers Association
Provided by IHS under license with NEMA
No reproduction or networking permitted without license from IHS
Not for Resale

3.58 THERMAL ENDURANCE

3.58.1 Test Procedure

The thermal endurance of all film insulated sizes and shapes shall be evaluated using 18 AWG heavy (or Type 2) magnet wire.

Thermal class ratings shall be based upon tests performed on unvarnished specimens of 18 AWG round wire with a heavy film coating, prepared and tested in accordance with ASTM D 2307. Wire size 28 AWG shall be permitted to be used as a substitute for 18 AWG where the specification's size range is limited to 25 AWG and finer.

The "end point" chosen for purposes of this publication is 20,000 hours. This means that the graph of the test data which is obtained when following the test procedure given in ASTM D 2307 must show an extrapolated life for the wire of 20,000 hours or more at or above the thermal class rating.

The philosophy established in ANSI/IEEE Std 1 was followed in setting the 20,000 hour end point.

The tested life of the specimen being evaluated shall be not less than 5000 hours at least 20°C above the thermal class rating.

The thermal class of fibrous covered or tape wrapped wire shall be based on experience.

The Institute of Electrical and Electronics Engineers has not established test procedures for the thermal evaluation of fibrous covered or tape wrapped magnet wire. However, ANSI/IEEE Std 1 points out that the thermal rating of insulation can be established either by experience or by accepted tests.

For example, glass fiber insulation has, by experience, become established as a component in both Class 130 and 155 insulation systems.

Glass fiber silicone treated insulation has, by experience, become established as a component in Class 200 insulation systems.

Polyester-glass-fiber insulation is more than 50 percent inorganic material and has, by experience, become established as a component in Class 155 insulation systems and in Class 200 when silicone treated.

Glass fiber and polyester-glass-fiber insulations, when treated with high-temperature, non-silicone organic varnish have, by experience, become established as components in Class 180 insulation systems. (The preceding five paragraphs are classified as Authorized Engineering Information.)

The high-temperature organic varnish must also meet the requirements of 3.58.1 as a film insulated magnet wire or have an extrapolated life of 20,000 hours at 180°C when following the procedures given in ASTM D 1932.

3.59 SCRAPE RESISTANCE

The scrape resistance test procedure is applicable to round film insulated wire sizes 10 through 30 AWG.

3.59.1 Machine

Scrape resistance of the wire specimen shall be determined using a machine such as that shown in Figure 3-15. The machine shall provide a scraping action in one direction along the longitudinal axis of the film insulated wire to be tested, at a rate of 16 inches (406 mm) ± 10 percent per minute.

Copyright National Electrical Manufacturers Association
Provided by IHS under license with NEMA
No reproduction or networking permitted without license from IHS
Not for Resale

The machine shall automatically apply an increasing scraping force by the movement of the scraping device along a pivoted loading arm whose lower edge is graduated to provide a multiplying factor.

The weighted scraping device shall contain a polished 0.009 inch (0.23 mm) diameter steel piano wire or needle located between two jaws which support the steel piano wire or needle rigidly, without sagging or curvature, at right angles to the direction of stroke.

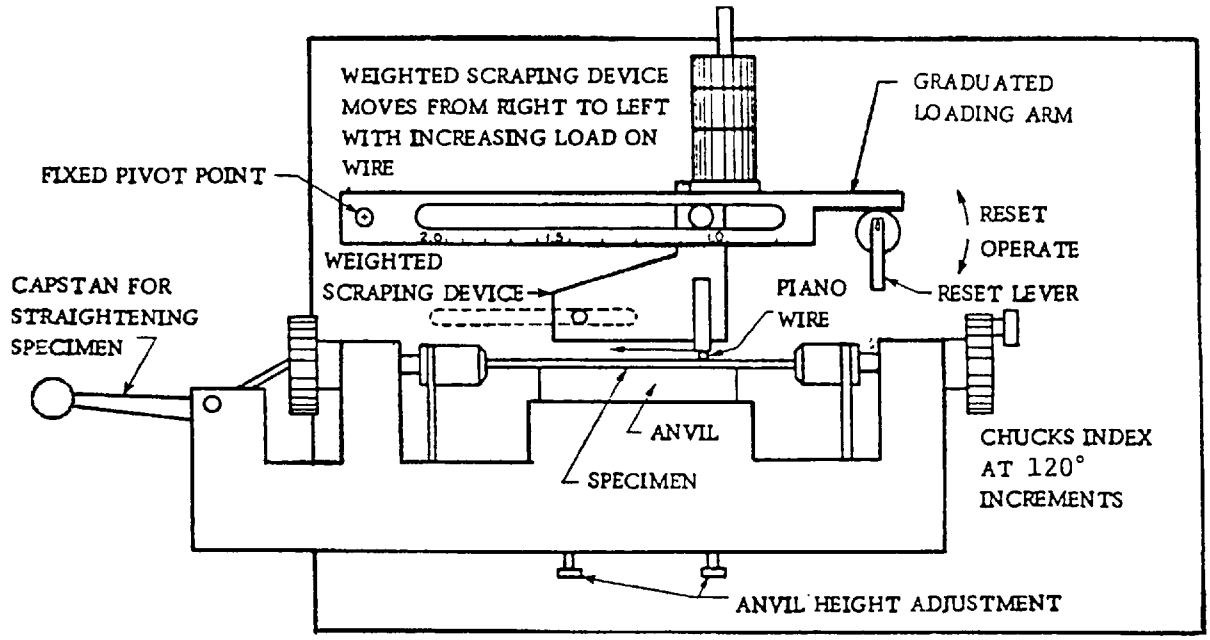

Figure 3-15
MACHINE FOR SCRAPE RESISTANCE

The machine shall be equipped with two adjustable clamping jaws which can be indexed at each 120° position to rotate the specimen and with a supporting anvil which can be suitably adjusted to support the specimens.

The machine shall be equipped with an electrical circuit which limits the current to 20.0 milliamperes at 7.5 ± 1.5 volts, between the conductor and the piano wire or needle scraper. The circuit shall be so designed that the machine stops when the film insulation is removed and the bare conductor exposed for approximately 1/8 inch (3 mm).

3.59.2 Test Procedure

A specimen of film insulated wire shall be wiped with a clean cloth or tissue, placed in the machine, and straightened by elongating it not more than 1 percent to remove kinks. The specimen shall then be secured in the clamping jaws, and the supporting anvil adjusted to contact the underside of the specimen.

An initial load of approximately 90 percent of the minimum "grams-to-fail" value specified in Part 2 shall be applied to the loading arm. The scraping device shall be lowered gently onto the surface of the film insulation and the action started. The scraping action will continue until the conductor is exposed and the machine stops.

The multiplying factor at which the machine shuts off shall be read from the scale on the loading arm. The product of this factor and the initial load applied shall be recorded as the "grams-to-fail" value.

The test procedure shall be repeated twice, indexing the clamps holding the wire to expose the wire surface 120° and 240° from the original position, and the same information recorded. The three "grams-to-fail" values shall then be averaged.

Copyright National Electrical Manufacturers Association
Provided by IHS under license with NEMA
No reproduction or networking permitted without license from IHS
Not for Resale

Appendix A
Reference test conditions and procedures for film insulated magnet wire

Title of Test	ASTM D 1676 Paragraph Film Insulated	ASTM D 2307 Paragraph Film Insulated	ASTM D 3353 Paragraph Fibrous Covered	NEMA Standards Publication MW 1000 Paragraph Number			
				Round		Rectangular	
				Film Insulated	Fibrous Covered	Film Insulated	Fibrous Covered
Dimensions	100–106	—	7.1–7.6	3.2.1.1	3.2.1.3	3.2.2.1	3.2.2.2
Adherence and flexibility	141–148	—	8.1–8.5	3.3.1	3.3*	3.3.3	3.3*
Elongation	122–129	—	4.1–4.6	3.4	3.4	3.4	3.4
Heat shock	156–162	—	—	3.5	—	3.5	—
Springback	154–155	—	—	3.7**	3.7.2	3.7.2	3.7.2
Dielectric strength	69–75	—	9.1–9.6	3.8†	3.8†	3.8†	3.8†
High-voltage continuity	38–45	—	—	3.9.2	—	—	—
Continuity, low-voltage	46–53	—	—	3.9.3	—	—	—
Completeness of cure	54–60	—	—	3.10	—	3.10	—
Solderability	178–185	—	—	3.13	—	—	—
Thermoplastic flow	61–68	—	—	3.50	—	3.50	—
Solubility	22–28	—	—	3.51.1	—	3.51.2	—
Dielectric strength at rated temperature	83–89	—	—	3.52	—	3.52	—
Transformer oil resistance and hydrolytic stability	186–195	—	—	3.54	—	3.54	—
Refrigerant extraction	130–140	—	—	3.55	—	—	—
Retained dielectric after Refrigerant 22 conditioning	90–99	—	—	3.56	—	—	—
Bond	4–12	—	—	3.57	—	—	—
Thermal endurance	—	1–13	—	3.58.1	3.58.2	3.58.1	3.58.2
Scrape resistance	170–177	—	—	3.59	—	—	—

* The appropriate adherence and flexibility test depends on the MW Standard for the product. See Part 2.

** The appropriate Springback test depends on the AWG size of the product being evaluated. See Part 2

† The appropriate Dielectric test depends on the AWG size of the product being evaluated. See Part 2

Copyright National Electrical Manufacturers Association
Provided by IHS under license with NEMA
No reproduction or networking permitted without license from IHS

Not for Resale