ANSI/NEMA MW 1000
Revision 2, 2006

MAGNET WIRE

Copyright National Electrical Manufacturers Association
Provided by IHS under license with NEMA
No reproduction or networking permitted without license from IHS
Not for Resale

Copyright National Electrical Manufacturers Association
Provided by IHS under license with NEMA
No reproduction or networking permitted without license from IHS
Not for Resale



Approved as an American National Standard
ANSI Approval Date: December 12, 2006

ANSI/NEMA MW 1000-2003
Revision 2, 2006

Magnet Wire

Published by

National Electrical Manufacturers Association
1300 North 17th Street, Suite 1752
Rosslyn, Virginia 22209

www.nema.org

© Copyright 2006 by the National Electrical Manufacturers Association. All rights including translation into other languages, reserved under the Universal Copyright Convention, the Berne Convention for the Protection of Literary and Artistic Works, and the International and Pan American Copyright Conventions.

Copyright National Electrical Manufacturers Association
Provided by IHS under license with NEMA
No reproduction or networking permitted without license from IHS
Not for Resale

NOTICE AND DISCLAIMER

The information in this publication was considered technically sound by the consensus of persons engaged in the development and approval of the document at the time it was developed. Consensus does not necessarily mean that there is unanimous agreement among every person participating in the development of this document.

The National Electrical Manufacturers Association (NEMA) standards and guideline publications, of which the document contained herein is one, are developed through a voluntary consensus standards development process. This process brings together volunteers and/or seeks out the views of persons who have an interest in the topic covered by this publication. While NEMA administers the process and establishes rules to promote fairness in the development of consensus, it does not write the document and it does not independently test, evaluate, or verify the accuracy or completeness of any information or the soundness of any judgments contained in its standards and guideline publications.

NEMA disclaims liability for any personal injury, property, or other damages of any nature whatsoever, whether special, indirect, consequential, or compensatory, directly or indirectly resulting from the publication, use of, application, or reliance on this document. NEMA disclaims and makes no guaranty or warranty, expressed or implied, as to the accuracy or completeness of any information published herein, and disclaims and makes no warranty that the information in this document will fulfill any of your particular purposes or needs. NEMA does not undertake to guarantee the performance of any individual manufacturer or seller's products or services by virtue of this standard or guide.

In publishing and making this document available, NEMA is not undertaking to render professional or other services for or on behalf of any person or entity, nor is NEMA undertaking to perform any duty owed by any person or entity to someone else. Anyone using this document should rely on his or her own independent judgment or, as appropriate, seek the advice of a competent professional in determining the exercise of reasonable care in any given circumstances. Information and other standards on the topic covered by this publication may be available from other sources, which the user may wish to consult for additional views or information not covered by this publication.

NEMA has no power, nor does it undertake to police or enforce compliance with the contents of this document. NEMA does not certify, test, or inspect products, designs, or installations for safety or health purposes. Any certification or other statement of compliance with any health or safety–related information in this document shall not be attributable to NEMA and is solely the responsibility of the certifier or maker of the statement.

Copyright National Electrical Manufacturers Association
Provided by IHS under license with NEMA
No reproduction or networking permitted without license from IHS
Not for Resale

CONTENTS

Page

Foreword xi
How to Use this Publication xii

Part 1 GENERAL

1.1 Scope 1
1.2 Normative References and Authorized Engineering Information (AEI) 1
1.3 Definitions 2
1.4 Materials 4
1.4.1 Conductors – Round, Square, and Rectangular, Copper and Aluminum 4
1.4.2 Insulating Materials 5
1.5 Manufacturing 5
1.5.1 Application of Insulation 5
1.5.2 Intermediate Sizes 6
1.5.3 Joints 6
1.5.4 Packaging 6
1.6 Test Conditions and Parameters 7
1.6.1 Safety Statement 7
1.6.2 Selection of Specimens 7
1.6.3 Ambient Conditions of Test 7
1.6.4 Power Frequency 7
1.6.5 Mandrels 7
1.6.6 Rectangular and Square Wire 8
1.6.7 Round Wire 8
1.6.8 Periodic Conformance 8
1.6.9 Retests 8
1.7 Units of Measure 9
1.8 Thermal Class of Magnet Wire 9
1.9 Ordering Information 9
1.9.1 Product Identification Number 9
1.9.2 Minimum Ordering Data 10

Tables

1-1 Dimensions for Bare and Film Insulated Round Magnet Wire 11
1-2 Round Copper Wire, Ultra Fine Sizes by Resistance 17
1-3 Dimensions for Round Film Insulated Self-Bonding Magnet Wire 18
1-4 Dimensions for Single Glass Fiber Covered Round Bare, Single Film Coated and Heavy Film Coated Wire 20
1-5 Dimensions for Double Glass Fiber Covered Round Bare, Single Film Coated and Heavy Film Coated Wire 22
1-6 Dimensions for Single Polyester Glass Fiber Covered Round Bare, Single Film Coated and Heavy Film Coated Wire 24
1-7 Dimensions for Double Polyester Glass Fiber Covered Round Bare, Single Film Coated and Heavy Film Coated Wire 26
1-8 Dimensions and Radii for Rectangular Bare Wire 28
1-9 Bare Rectangular Conductor Tolerances 28

© Copyright 2005 by the National Electrical Manufacturers Association.

Copyright National Electrical Manufacturers Association
Provided by IHS under license with NEMA
No reproduction or networking permitted without license from IHS
Not for Resale

1-10 Film Insulated Rectangular Magnet Wire
Increase in Thickness and Width Due to Film Coating 28
1-11 Dimensions of Square Bare Wire 29
1-12 Heavy and Quadruple Film Insulated Square Magnet Wire
Increase in Dimensions Due to Film Coating 30
1-13 Range of Increase in Dimensions, Inches
Single Glass Fiber Covered Heavy Film Insulated Rectangular Copper Wire..... 31
1-14 Range of Increase in Dimensions, Inches
Double Glass Fiber Covered Bare Rectangular Copper Wire 32
1-15 Range of Increase in Dimensions, Inches
Double Glass Fiber Covered Heavy Film Coated Rectangular Copper Wire 33
1-16 Range of Increase in Dimensions, Inches
Single Polyester Glass Fiber Covered Heavy Film Insulated Rectangular Copper Wire 34
1-17 Range of Increase in Dimensions, Inches
Double Polyester Glass Fiber Covered Bare Rectangular Copper Wire 35
1-18 Range of Increase in Dimensions, Inches
Double Polyester Glass Fiber Covered Heavy Film Coated Rectangular Copper Wire 36
1-19 Single Glass Fiber Covered, Heavy Film Insulated Square Copper Magnet Wire–
Minimum Increase and Maximum Overall Dimensions Due to Insulation..... 37
1-20 Single Polyester Glass Fiber Covered Heavy Film Insulated Square Copper Magnet
Wire-Minimum Increase and Maximum Overall Dimensions Due to Insulation 38
1-21 Double Glass Fiber Covered, Bare or Heavy Film Insulated Square Copper Magnet Wire–
Minimum Increase and Maximum Overall Dimensions Due to Insulation..... 39
1-22 Double Polyester Glass Fiber Covered, Bare or Heavy Film Insulated Square Copper
Magnet Wire–Minimum Increase and Maximum Overall Dimensions Due to Insulation 40
1-23 Comparison Between AWG and IEC R-40 Series Bare Wire Diameters 41
1-24 Comparison Between NEMA and IEC Increases and Overall Diameters..... 43

© Copyright 2005 by the National Electrical Manufacturers Association.

Copyright National Electrical Manufacturers Association
Provided by IHS under license with NEMA
No reproduction or networking permitted without license from IHS
Not for Resale

CONTENTS (continued)

Part 2 PROPERTIES AND REQUIREMENTS

Specification Number		Thermal Class	Round	Rectangular and Square	Page No.
MW 2-C	Polyurethane for solderable applications (Single and Heavy)	105	X	—	2
MW 3-C	Polyurethane with self-bonding overcoat for solderable applications (Types 1 and 2)	105	X	—	3
MW 5-C	Polyester (Single and Heavy)	155	X	—	4
MW 6-C	Polyamide (Single and Heavy)	105	X	—	5
MW 9-C	Epoxy (Single, Heavy, and Triple) **(OBSOLETE)**	130	X	—	6
MW 14-C	Epoxy (Heavy and Quadruple) **(OBSOLETE)**	130	—	X	7
MW 15-A	Polyvinyl Acetal (Single and Heavy)	105	X	—	8
MW 15-C	Polyvinyl Acetal (Single, Heavy, Triple and Quad)	105	X	—	9
MW 16-C	Polyimide (Single Heavy, Triple, and Quadruple)	240	X	—	10–17
MW 17-C	Polyvinyl acetal overcoated with polyamide (Single and Heavy)	105	X	—	18
MW 18-A	Polyvinyl acetal (Heavy and Quadruple)	105	—	X	19
MW 18-C	Polyvinyl acetal (Heavy and Quadruple)	105	—	X	20
MW 19-C	Polyvinyl acetal with self-bonding overcoat (Types 1, 2 and 3)	105	X	—	21
MW 20-C	Polyimide (Heavy and Quadruple)	240	—	X	22
MW 24-A	Polyester (amide) (imide) overcoated with polyamide (Single and Heavy)	155	X	—	23
MW 24-C	Polyester (amide) (imide) overcoated with polyamide (Single, Heavy and Triple)	155	X	—	24
MW 26-C	Polyester (imide) for solderable applications (Single and Heavy)	155	X	—	25
MW 27-C	Polyester (imide) overcoated with polyamide for solderable applications (Single and Heavy)	155	X	—	26
MW 28-A	Polyurethane overcoated with polyamide for solderable applications (Single and Heavy)	130	X	—	27
MW 28-C	Polyurethane overcoated with polyamide for solderable applications (Single and Heavy)	130	X	—	28
MW 29-C	Polyurethane overcoated with polyamide and self-bonding overcoated for solderable applications (Types 1 and 2)	105	X	—	29
MW 30-C	Polyester (amide) (imide) (Single, Heavy, and Triple)	180	X	—	30
MW 31-C	Paper covered	90 or 105	X	—	31
MW 32-C	Double paper single cotton covered **(OBSOLETE)**	90 or 105	—	X	32–33
MW 33-C	Paper covered	90 or 105	—	X	34

© Copyright 2005 by the National Electrical Manufacturers Association.

Copyright National Electrical Manufacturers Association
Provided by IHS under license with NEMA
No reproduction or networking permitted without license from IHS
Not for Resale

CONTENTS (continued)

Part 2 PROPERTIES AND REQUIREMENTS

Specification Number		Thermal Class	Round	Rectangular and Square	Page No.
MW 35-A	Polyester (amide)(imide) overcoated with polyamideimide (Single and Heavy)	220	X	—	35
MW 35-C	Polyester (amide)(imide) overcoated with polyamideimide (Single, Heavy Triple, and Quad)	200	X	—	36
MW 36-A	Polyester (amide)(imide) overcoated with polyamideimide (Heavy and Quadruple)	220	—	X	37
MW 36-C	Polyester (amide)(imide) overcoated with polyamideimide (Heavy and Quadruple)	200	—	X	38
MW 37-C	Polyester (amide)(imide) overcoated with polyamideimide (Heavy)	220	X	—	38-1
MW 38-C	Polyester (amide)(imide) overcoated with polyamideimide (Heavy)	220	—	X	38-2
MW 41-C	Glass fiber covered (Single and Double)	155	X	—	39
MW 42-C	Glass fiber covered (Single and Double)	155	—	X	40
MW 43-C	Glass fiber covered silicone treated (Single and Double)	200	—	X	41
MW 44-C	Glass fiber covered silicone treated (Single and Double)	200	X	—	42
MW 45-C	Polyester glass fiber covered (Single and Double)	155	X	—	43
MW 46-C	Polyester glass fiber covered (Single and Double)	155	—	X	44
MW 47-C	Polyester glass fiber covered silicone treated (Single and Double)	200	X	—	45
MW 48-C	Polyester glass fiber covered silicone treated (Single and Double)	200	—	X	46
MW 50-C	Glass fiber covered, High Temperature organic varnish treated (Single and Double)	180	X	—	47
MW 51-C	Polyester glass fiber covered, High Temperature organic varnish treated (Single and Double)	180	X	—	48
MW 52-C	Glass fiber covered, High Temperature organic varnish treated (Single or Double)	180	—	X	49
MW 53-C	Polyester glass fiber covered, High Temperature organic varnish treated (Single and Double)	180	—	X	50
MW 60-A	Aromatic polyamide paper covered (Paper)	220	—	X	52–53
MW 60-C	Aromatic polyamide paper covered (Paper)	220	—	X	54–55
MW 61-A	Aromatic polyamide paper covered (Paper)	220	X	—	56–57
MW 61-C	Aromatic polyamide paper covered (Paper)	220	X	—	58–59
MW 62-C	Aromatic Polyimide tape covered	220	—	X	60
MW 63-C	Aromatic Polyimide tape covered	220	X	—	61
MW 72-C	Polyester (amide)(imide) for Hermetic	180	X	—	62

© Copyright 2005 by the National Electrical Manufacturers Association.

Copyright National Electrical Manufacturers Association
Provided by IHS under license with NEMA
No reproduction or networking permitted without license from IHS
Not for Resale

Part 2 PROPERTIES AND REQUIREMENTS (continued)

Specification Number		Thermal Class	Round	Rectangular and Square	Page No.
	Applications (Heavy)				
MW 73-A	Polyester (amide)(imide) overcoated with polyamideimide for Hermetic Applications (Heavy)	220	X	—	63
MW 73-C	Polyester (amide)(imide) overcoated with polyamideimide for Hermetic Applications (Heavy, Triple, and Quad)	200	X	—	64
MW 74-A	Polyester (amide)(imide) (Single and Heavy)	220	X	—	65
MW 74-C	Polyester (amide)(imide) (Single and Heavy)	200	X	—	66
MW 75-C	Polyurethane for solderable applications (Single and Heavy)	130	X	—	67
MW 76-A	Polyester (amide)(imide) overcoated with polyamide (Single and Heavy)	180	X	—	68
MW 76-C	Polyester (amide)(imide) overcoated with polyamide (Single, Heavy, and Triple)	180	X	—	69
MW 77-C	Polyester (imide) for solderable applications (Single and Heavy)	180	X	—	70
MW 78-C	Polyester (imide) overcoated with polyamide for solderable applications (Single and Heavy)	180	X	—	71
MW 79-C	Polyurethane for solderable applications (Single, Heavy and Triple)	155	X	—	72
MW 80-A	Polyurethane overcoated with polyamide for solderable applications (Single and Heavy)	155	X	—	73
MW 80-C	Polyurethane overcoated with polyamide for solderable applications (Single, Heavy, Triple)	155	X	—	74
MW 81-C	Polyamideimide (Single and Heavy)	220	X	—	75
MW 82-C	Polyurethane for solderable applications (Single, Heavy and Triple)	180	X	—	76
MW 83-C	Polyurethane overcoated with polyamide for solderable applications (Single, Heavy, Triple)	180	X	—	77
MW 102-A	Polyester (amide)(imide) overcoated with polyamideimide and self-bonding overcoat (Type 1 and Type 2)	180	X	—	78
MW 102-C	Polyester (amide)(imide) overcoated with polyamideimide and self-bonding overcoat (Type 1 and Type 2)	180	X	—	79
MW 130-C	Polyurethane with self-bonding overcoat (Type 1 and Type 2)	130	X	—	80
MW 131-C	Polyurethane with self-bonding overcoat (Type 1 and Type 2)	155	X	—	81
MW 135-C	Polyurethane overcoated with polyamide and self-bonding overcoat (Type 1 and Type 2)	130	X	—	82
MW 136-C	Polyurethane overcoated with polyamide and self-bonding overcoat (Type 1 and Type 2)	155	X	—	83

© Copyright 2005 by the National Electrical Manufacturers Association.

Copyright National Electrical Manufacturers Association
Provided by IHS under license with NEMA
No reproduction or networking permitted without license from IHS Not for Resale

CONTENTS (continued)

Tables

S (MW 16-C) Polyimide Single Film Insulated Round Copper Magnet Wire, Thermal Class 240 11
H (MW 16-C) Polyimide Heavy Film Insulated Round Copper Magnet Wire, Thermal Class 240 13
T (MW 16-C) Polyimide Triple Film Insulated Round Copper Magnet Wire, Thermal Class 240 15
Q (MW 16-C) Polyimide Quadruple Film Insulated Round Copper Magnet Wire, Thermal Class 240 .. 17
PR (MW 60-A) Increase in Dimensions of Rectangular Wire Due to Paper Covering..... 53
PSQ (MW 60-A) Dimensions 1–4/0 AWG 53
PR (MW 60-C) Increase in Dimensions of Rectangular Wire Due to Paper Covering..... 55
PSQ (MW 60-C) Dimensions 1–4/0 AWG 55
PR (MW 61-A) Dimensions 4/0–9 AWG 57
PR (MW 61-C) Dimensions 4/0–9 AWG..... 59
TR (MW 63-C) Insulated Wire Dimensions..... 61

Part 2
PROPERTIES AND REQUIREMENTS LISTING BY THERMAL CLASS, INSULATION, COATING AND FORM

Thermal Class	Insulation, Covering and Form	See Part 2, Section		
		Aluminum	Copper	Page No.
FILM INSULATED ROUND MAGNET WIRE				
105	Polyamide	-	MW 6-C	5
105	Polyvinyl acetal	MW 15-A	MW 15-C	8, 9
105	Polyvinyl acetal overcoated with polyamide	-	MW 17-C	18
105 Solderable	Polyurethane	-	MW 2-C	2
105 Solderable	Polyurethane and self-bonding overcoat	-	MW 3-C	3
105 Solderable	Polyurethane overcoated with polyamide and self-bonding overcoat	-	MW 29-C	29
105	Polyvinyl acetal and self-bonding overcoat	-	MW 19-C	21
130 Solderable	Polyurethane overcoated with polyamide	MW 28-A	MW 28-C	27, 28
130 Solderable	Polyurethane	-	MW 75-C	71
130 Solderable	Polyurethane with self-bonding overcoat	-	MW 130-C	80
130 Solderable	Polyurethane overcoated with polyamide and self-bonding overcoat	-	MW 135-C	82
155	Polyester	-	MW 5-C	4
155	Polyester (amide)(imide) overcoated with polyamide	MW 24-A	MW 24-C	23, 24
155 Solderable	Polyester (imide)	-	MW 26-C	25
155 Solderable	Polyester (imide) overcoated with polyamide	-	MW 27-C	26
155 Solderable	Polyurethane	-	MW 79-C	76
155 Solderable	Polyurethane overcoated with polyamide	MW 80-A	MW 80-C	73, 74
155 Solderable	Polyurethane with self-bonding overcoat	-	MW 131-C	81
155 Solderable	Polyurethane overcoated with polyamide and self-bonding overcoat	-	MW 136-C	83
180	Polyester (amide)(imide)	-	MW 30-C	30
180	Polyester (amide)(imide) overcoated with polyamide	MW 76-A	MW 76-C	68, 69
180	Polyester (amide)(imide) overcoated with polyamideimide and self-bonding overcoat	MW 102-A	MW 102-C	78, 79

© Copyright 2005 by the National Electrical Manufacturers Association.

Copyright National Electrical Manufacturers Association
Provided by IHS under license with NEMA
No reproduction or networking permitted without license from IHS
Not for Resale

Part 2
PROPERTIES AND REQUIREMENTS LISTING BY THERMAL CLASS, INSULATION, COATING AND FORM

Thermal Class	Insulation, Covering and Form	See Part 2, Section		
		Aluminum	Copper	Page No.
180 Solderable	Polyester (imide)	-	MW 77-C	70
180 Solderable	Polyester (imide) overcoated with polyamide	-	MW 78-C	71
180 Hermetic	Polyester (amide)(imide)	-	MW 72-C	62
180 Solderable	Polyurethane	-	MW 82-C	76
180 Solderable	Polyurethane overcoated with Polyamide	-	MW 83-C	77
200	Polyester (amide)(imide) overcoated with polyamideimide	-	MW 35-C	36
200	Polyester (amide)(imide)	-	MW 74-C	66
200 Hermetic	Polyester (amide)(imide) overcoated with polyamideimide	-	MW 73-C	64
220	Polyester (amide)(imide) overcoated with polyamideimide	MW 35-A	-	35
220	Polyester (amide)(imide) overcoated with polyamideimide	-	MW 37-C	38-1
220	Polyester (amide)(imide)	MW 74-A	-	65
220 Hermetic	Polyester (amide)(imide) overcoated with polyamideimide	MW 73-A	-	63
220	Polyamideimide		MW 81-C	75
240 Hermetic	Polyimide	-	MW 16-C	10–17
FILM INSULATED RECTANGULAR AND SQUARE WIRE				
105	Polyvinyl acetal	MW 18-A	MW 18-C	19, 20
200	Polyester (amide)(imide) overcoated with polyamideimide	-	MW 36-C	38
220	Polyester (amide)(imide) overcoated with polyamideimide	MW 36-A	-	37
220	Polyester (amide)(imide) overcoated with Polyamideimide	-	MW 38-C	38-2
240	Polyimide	-	MW 20-C	22
FIBROUS COVERED ROUND MAGNET WIRE				
90 or 105	Paper covered	-	MW 31-C	31
155	Glass fiber covered	-	MW 41-C	39
155	Polyester glass fiber covered	-	MW 45-C	43
180	Glass fiber covered, High temperature organic varnish treated	-	MW 50-C	47
180	Polyester glass fiber covered, High temperature organic varnish treated	-	MW 51-C	48
200	Glass fiber covered, silicone treated	-	MW 44-C	42
200	Polyester glass fiber covered, Silicone treated	-	MW 47-C	45
220	Aromatic polyamide paper covered	MW 61-A	MW 61-C	56–59
220	Aromatic polyimide tape covered	-	MW 63-C	61
FIBROUS COVERED RECTANGULAR & SQUARE MAGNET WIRE				

© Copyright 2005 by the National Electrical Manufacturers Association.

Copyright National Electrical Manufacturers Association
Provided by IHS under license with NEMA
No reproduction or networking permitted without license from IHS
Not for Resale

Part 2
PROPERTIES AND REQUIREMENTS LISTING BY THERMAL CLASS, INSULATION, COATING AND FORM

Thermal Class	Insulation, Covering and Form	See Part 2, Section		
		Aluminum	Copper	Page No.
90 or 105	Paper covered	-	MW 33-C	34
155	Glass fiber covered	-	MW 42-C	40
155	Polyester glass fiber covered	-	MW 46-C	44
180	Glass fiber covered, High temperature organic varnish treated	-	MW 52-C	49
180	Polyester glass fiber covered, High temperature organic varnish treated	-	MW 53-C	50
200	Glass fiber covered, Silicone treated	-	MW 43-C	41
200	Polyester glass fiber covered, Silicone treated	-	MW 48-C	46
220	Aromatic polyamide paper covered	MW 60-A	MW 60-C	52–55
220	Aromatic polyimide tape covered	-	MW 62-C	60

© Copyright 2005 by the National Electrical Manufacturers Association.

Copyright National Electrical Manufacturers Association
Provided by IHS under license with NEMA
No reproduction or networking permitted without license from IHS
Not for Resale

CONTENTS (continued)

Part 3 TEST PROCEDURES

3.1 Safety Statement 1

ROUTINE TESTS

3.2 Dimensions 1
3.2.1 Round Wire 1
3.2.2 Rectangular and Square Wire 3
3.3 Adherence and Flexibility 3
3.3.1 Elongation and Mandrel Wrap Method 3
3.3.2 Mandrel Wrap Method 4
3.3.3 Elongation Method 4
3.3.4 Circumferential Cut and Elongation Method 4
3.3.5 Bend and Shot Dielectric Method 4
3.3.6 Flat and Edge Bend Method 4
3.4 Elongation 4
3.5 Heat Shock 6
3.6 Reserved 6
3.7 Springback (Specified for Copper Conductors Only) 6
3.7.1 Mandrel Wrap Method 6
3.7.2 Deflection Method (All Rectangular and Round Sizes Larger than 14 AWG) 10
3.8 Dielectric Breakdown 11
3.8.1 Test Procedure—General 11
3.8.2 Foil Electrode Method 11
3.8.3 Twisted Pair Method 12
3.8.4 Wound Pair Method 14
3.8.5 Layer Method 14
3.8.6 Bend Method 14
3.8.7 Cylinder Method 15
3.9 Continuity 17
3.9.1 General 17
3.9.2 High-Voltage Direct Current Continuity (14-44 AWG) 17
3.9.3 Low-Voltage Direct Current Continuity (45-56 AWG) 18
3.10 Dissipation Factor 20
3.10.1 Principle of Test 20
3.10.2 Equipment 20
3.10.3 Preparation of Specimen 20
3.10.4 Procedure 21
3.10.5 Result 22
3.11 Reserved 22
3.12 Coverage 22
3.12.1 Mandrel Wrap Method 22
3.12.2 Flat Bend Method 22
3.13 Solderability 22
3.13.1 General 22
3.13.2 Self-Supported Specimen Method (14-36 AWG) 23
3.13.3 Fixture-Supported Specimen Method (37-56 AWG) 23

© Copyright 2005 by the National Electrical Manufacturers Association.

Copyright National Electrical Manufacturers Association
Provided by IHS under license with NEMA
No reproduction or networking permitted without license from IHS
Not for Resale

PERIODIC CONFORMANCE TESTS

3.50 Thermoplastic Flow 24
3.50.1 Apparatus 24
3.50.2 Procedure 24
3.51 Solubility 25
3.51.1 Round Film Insulated Wire (10 AWG and Finer) 25
3.51.2 Round Wire Larger than 10 AWG, Rectangular and Square Wire 25
3.52 Dielectric Strength at Rated Temperature 26
3.52.1 Test Procedure 26
3.53 Toluene/Ethanol Compatibility 26-1
3.53.1 Principle of Test 26-1
3.53.2 Equipment & Materials 26-1
3.53.3 Specimen Preparation 26-1
3.53.4 Procedure 26-1
3.53.5 Result 26-1
3.54 Transformer Oil Resistance and Hydrolytic Stability 26-2
3.54.1 Principal of Test 26-2
3.54.2 Test Apparatus 26-2
3.54.3 Short Term Exposure Test 26-2
3.54.4 Long Term Exposure Test 27
3.55 Refrigerant (R-22) Extraction 27
3.55.1 Preparation of Specimens 28
3.55.2 Environmental Conditioning 28
3.55.3 Collecting Residue 29
3.55.4 Determination of Results 30
3.56 Dielectric Breakdown after R-22 Conditioning 30
3.57 Bond 31
3.57.1 Preparation of Specimens 31
3.57.2 Heat and Solvent Bonding 31
3.57.3 Room Temperature Bonding 32
3.57.4 Elevated Temperature Bond Test Procedure 32
3.58 Thermal Endurance 33
3.58.1 Test Procedure 33
3.59 Scrape Resistance 33
3.59.1 Apparatus 33
3.59.2 Test Procedure 34

Tables

3.2.1 Specification for Micrometer Anvil Diameter and Spindle Force 2
3.3.1 Adherence and Flexibility: Elongation and Mandrel Diameters 3
3.4.1 Minimum Percent Elongation, Square and Rectangular Wire 4
3.4.2 Minimum Percent Elongation, Round Wire 5
3.7.1 Springback - Mandrel Wrap Method 9
3.8.2 Minimum Dielectric Breakdown Voltage—Foil Method 12
3.8.3.1 Twisted Pair Method: Tensions and Rotations 12
3.8.3.2 Minimum Dielectric Breakdown Voltage—Twisted Pair Method 13

© Copyright 2005 by the National Electrical Manufacturers Association.

Copyright National Electrical Manufacturers Association
Provided by IHS under license with NEMA
No reproduction or networking permitted without license from IHS
Not for Resale

3.8.6 Bend Method Mandrel Sizes 14
3.8.7.1 Rate of Increase in Voltage—Cylinder Method 15
3.8.7.2 Cylinder Method Test Loads 16
3.8.7.3 Minimum Dielectric Breakdown Voltage—Cylinder Method 16
3.9.2.1 Test Voltage (DC Volts ±5%) and Maximum Fault Count per 100 Feet 17
3.9.2.2 Threshold Fault Current 18
3.9.3 Low-Voltage Continuity—Maximum Fault Count per 100 Feet 19
3.50.2 Thermoplastic Flow Test Loads 24
3.54.4 Pressure Vessel Components 27
3.55.1 Recommended Turns/Coil 28
3.55.2 Typical Siphon Cup Dimensions 28
3.57.1 Bond Test Parameters 31
3.59.1 Standard Scrape Resistance of Round Film Insulated Magnet Wire 35
3.59.2 Reduced Scrape Resistance of Round Film Insulated Magnet Wire 35

Figures

3.7.1.1 Details of Springback Scale 7
3.7.1.2 Springback Tester After Winding a Coil Under Tension 8
3.7.1.3 Example of Springback Scales 8
3.7.2 Apparatus for Springback Deflection Method 10
3.8.4 Wound Pair Specimen Winder 14
3.8.7 Test Apparatus for Cylinder Method 15
3.9.3 Bath of Mercury or Other Suitable Material 19
3.10.2 Electrode and Specimen Arrangement for Dissipation Factor Test 21
3.13.3 Solderability Test Specimen Fixture 23
3.51.1 Machine for Solubility Scrape 25
3.55.1 Refrigerant Extractable Siphon Cup 28
3.55.2 Condenser Coil 29
3.55.3 Condenser Coil Siphon Cup Assembly 29
3.57.1 Bond Coil Prep Fixture 31
3.57.3.1 Bond Strength Test Fixture 32
3.57.3.2 Bond Test Fixture 32
3.59.1 Machine for Scrape Resistance 34

Appendices

A Reference Test Conditions and Procedures for Film-Insulated Magnet Wire A–1
B Magnet Wire Packaging and Labeling B–1
C Cross Reference of NEMA, Cancelled Federal J-W-1177, and IEC Magnet Wire Specifications C–1

© Copyright 2005 by the National Electrical Manufacturers Association.

Copyright National Electrical Manufacturers Association
Provided by IHS under license with NEMA
No reproduction or networking permitted without license from IHS Not for Resale

Foreword

NEMA MW 1000-2003 and its revisions supersede NEMA Standards Publication MW 1000-1997. It has been approved as an American National Standard.

The standards contained in this publication are periodically reviewed by the NEMA Magnet Wire Section for revisions considered to be necessary to keep them up to date with changes in technology. Proposed or recommended revisions should be submitted to:

Vice President, Engineering
National Electrical Manufacturers Association
1300 North 17th Street, Suite 1847
Rosslyn, Virginia 22209

These standards were developed by the Magnet Wire Section of NEMA, working closely with representatives of various industries that use magnet wire. At the time they were approved, the Magnet Wire Section had the following members:

Bridgeport Insulated Wire Company—Bridgeport, CT
Elektrisola, Inc.—Boscawen, NH
Essex Group, Inc.—Fort Wayne, IN
Magnekon—San Nicolas, NL, Mexico
Nexans—Markham, ON, Canada
Phelps Dodge Magnet Wire Company—Fort Wayne, IN
Rea Magnet Wire Company, Inc.—Fort Wayne, IN
Universal Lighting Technologies—Gallman, MS

© Copyright 2005 by the National Electrical Manufacturers Association.

Copyright National Electrical Manufacturers Association
Provided by IHS under license with NEMA
No reproduction or networking permitted without license from IHS
Not for Resale

How to Use This Publication

Part 1 (blue, if in print) of this publication deals with information common to all types of magnet wire, that is, ordering information, general material requirements, general test conditions, definitions and manufacturing data in support of thermal rating. This part also includes dimensions with metric equivalents for all bare, minimum insulation increase, and overall dimensions for all Part 2 MW specification requirements. The exception to this is MW 16, where the dimensional and other requirements are provided in Part 2.

Part 2 (yellow, if in print) consists of product specifications requirements (other than dimensions) for magnet wire with different types of coatings and/or coverings. Insofar as possible, the product specifications are complete on one sheet since they are arranged to include only one insulation or covering per sheet. The title on each individual sheet identifies the product. (Example: MW 15-C, Polyvinyl Acetal Round Copper Magnet Wire. MW 15-A covers the aluminum version of the same generic product).

Part 3 (green, if in print) contains the test procedures to be followed and corresponding tables of specific test values to be attained in determining compliance with the requirements given in Part 2. The requirements are consolidated with the test procedures and testing parameters for a given property. An index of the main test paragraphs is given beginning on page viii of the Table of Contents.

Appendix A (tan, if in print) provides a cross reference between test procedures in this Standards Publication and those published by the American Society for Testing and Materials (ASTM).

Appendix B (tan, if in print) consists of definitions, requirements, and recommended test procedures for reusable magnet wire packaging, standardized dimensions for spools and reels, and formatting for the labeling of magnet wire products.

Appendix C (tan, if in print) provides a cross reference between NEMA, cancelled J-W-1177 Federal, and IEC magnet wire specifications.

First, review Part 1 for general information. Then in Part 2 locate the specification for the type of insulation and conductor of interest. Part 2 is arranged in numerical order as shown beginning on page ii. The dimensions for each Part 2 MW type are provided in Part 1 beginning with Table 1-1. The specification in Part 2 will indicate the requirements to be met and will refer to the test procedures and corresponding test values to be attained in Part 3.

© Copyright 2005 by the National Electrical Manufacturers Association.

Copyright National Electrical Manufacturers Association
Provided by IHS under license with NEMA
No reproduction or networking permitted without license from IHS
Not for Resale

<This page is intentionally left blank.>

© Copyright 2005 by the National Electrical Manufacturers Association.

Copyright National Electrical Manufacturers Association
Provided by IHS under license with NEMA
No reproduction or networking permitted without license from IHS
Not for Resale

Part 1
GENERAL

1.1 SCOPE

This publication is designed to present, in concise and convenient form, all of the existing NEMA Standards for magnet wire. This publication is classified as a NEMA Standard unless otherwise indicated. It contains standards for round, rectangular, and square film insulated and/or fibrous covered copper and aluminum magnet wire for use in electrical apparatus. Included are the definitions, type designations, dimensions, constructions, performance, and test methods for magnet wire generally used in the winding of coils for electrical apparatus.

1.2 NORMATIVE REFERENCES AND AUTHORIZED ENGINEERING INFORMATION (AEI)

The following references apply to Parts 1, 2 and 3 only. Reference is made to the current revision of each of the standards or AEI listed below:

American National Standards Institute
11 West 42nd Street
New York, NY 10036

American Society for Testing Materials
100 Barr Harbor Drive
West Conshohocken, PA 19428-2959

ASTM B 3	*Standard Specification for Soft or Annealed Copper Wire*
ASTM B 32	*Standard Specification for Solder Metal*
ASTM B 48	*Standard Specification for Soft Rectangular and Square Bare Copper Wire for Electrical Conductors*
ASTM B 193	*Standard Test Method for Resistivity of Electrical Conductor Materials*
ASTM D 149	*Standard Test Method for Dielectric Breakdown Voltage and Dielectric Strength of Solid Electrical Insulating Materials at Commercial Power Frequencies*
ASTM D 1676	*Standard Methods for Testing Film-Insulated Magnet Wire*
ASTM D 1711	*Standard Terminology Relating to Electrical Insulation*
ASTM D 1932	*Standard Test Method for Thermal Endurance of Flexible Electrical Insulating Varnishes*
ASTM D 2307	*Standard Test Method for Relative Thermal Endurance of Film-Insulated Round Magnet Wire*
ASTM D 3353	*Standard Methods for Testing Fibrous-Insulated Magnet Wire*
ASTM D 5423	*Standard Specification for Forced-Convection Laboratory Ovens for Evaluation of Electrical Insulation*
ASTM E 8	*Standard Methods of Tension Testing of Metallic Materials*
ASTM E 29	*Standard Recommended Practice for Indicating Which Places of Figures Are to Be Considered Significant in Specified Limiting Values*

Institute of Electrical and Electronics Engineers
45 Hoes Lane, P.O. Box 1331
Piscataway, NJ 08855-1331

ANSI/IEEE Std 1	*General Principles for Temperature Limits in the Rating of Electric Equipment and for the Evaluation of Electrical Insulation*
ANSI/IEEE Std 4	*Techniques for High Voltage Testing*

© Copyright 2005 by the National Electrical Manufacturers Association.

Copyright National Electrical Manufacturers Association
Provided by IHS under license with NEMA
No reproduction or networking permitted without license from IHS
Not for Resale

International Electrotechnical Commission
3, rue de Varembé
Case postale 131
CH-1211 Geneva 20

IEC 60317-0-1 *Specifications for particular types of winding wires - Part 0-1 General requirements - Enamelled round copper wire*

IEC 60317-0-2 *Specifications for particular types of winding wires - Part 0-2 General requirements - Enamelled rectangular copper wire*

National Institute for Standards and Technology
Gaithersburg, MD

Handbook 100 *Copper Wire Tables*

National Electrical Manufacturers Association
1300 North 17th Street, Suite 1847
Rosslyn, VA 22209

MW 750 (AEI) *Dynamic Coefficient of Friction of Film-Insulated Magnet Wire*
MW 785 (AEI) *Simulated Insertion Force Test*
MW 790 (AEI) *AC Overload Test*

1.3 DEFINITIONS

build: The increase in wire dimension (diameter, thickness, width) due to the insulation.

single build: A reference terminology denoting the lowest of four standard NEMA film builds.

The minimum insulation increases in mils for single build in the 8-13.5 AWG size range are defined by the formula:

$$B_1 = 0.5 \text{ x} \left(10^{0.600 - \frac{AWG}{135}} \right)$$

The minimum insulation increases in mils for single build in the 14-29.5 AWG size range are defined by the formula:

$$B_1 = 10^{0.518 - \frac{AWG}{44.8}}$$

The minimum insulation increases in mils for single build in the 30-46 AWG size range are defined by the formula:

$$B_1 = (46.7 \text{ x } (\text{nominal bare diameter in inches x } 25.4)^{0.75})/25.4$$

heavy build: A reference terminology denoting standard NEMA film builds which are approximately two times the increases specified for single builds.

The minimum insulation increases in mils for heavy build in the 4-13.5 AWG size range are defined by the formula:

© Copyright 2005 by the National Electrical Manufacturers Association.

Copyright National Electrical Manufacturers Association
Provided by IHS under license with NEMA
No reproduction or networking permitted without license from IHS
Not for Resale

$$B_2 = 10^{0.600 - \frac{AWG}{135}}$$

The minimum insulation increases in mils for heavy build in the 14-29.5 AWG size range are defined by the formula:

$$B_2 = 10^{0.819 - \frac{AWG}{44.8}}$$

The minimum insulation increases in mils for heavy build in the 30-46 AWG size range are defined by the formula:

$$B_2 = (93.3 \times (\text{nominal bare diameter in inches} \times 25.4)^{0.75})/25.4$$

triple build: A reference terminology denoting standard NEMA film builds which are approximately three times the increases specified for single builds.

The minimum insulation increases in mils for triple build in the 14-29.5 AWG size range are defined by the formula:

$$B_3 = 10^{0.995 - \frac{AWG}{44.8}}$$

The minimum insulation increases in mils for triple build in the 30-46 AWG size range are defined by the formula:

$$B_3 = (140.0 \times (\text{nominal bare diameter in inches} \times 25.4)^{0.75})/25.4$$

quadruple build: A reference terminology denoting standard NEMA film builds which are approximately four times the increases specified for single builds.

The minimum insulation increases in mils for quad build in the 10-13.5 AWG size range are defined by the formula:

$$B_4 = 2 \times \left(10^{0.600 - \frac{AWG}{135}} \right)$$

The minimum insulation increases in mils for quad build in the 14–29.5 AWG size range are defined by the formula:

$$B_4 = 10^{1.12 - \frac{AWG}{44.8}}$$

The minimum insulation increases in mils for quadruple build in the 30-46 AWG size range are defined by the formula:

$$B_4 = (186.7 \times (\text{nominal bare diameter in inches} \times 25.4)^{0.75})/25.4$$

type 1 self-bonding: A single build insulated magnet wire with a self-bonding outer coating. The maximum overall diameter does not exceed the maximum overall diameter of heavy build.

© Copyright 2005 by the National Electrical Manufacturers Association.

Copyright National Electrical Manufacturers Association
Provided by IHS under license with NEMA
No reproduction or networking permitted without license from IHS
Not for Resale

type 2 self-bonding: A heavy build insulated magnet wire with a self-bonding outer coating. The maximum overall diameter does not exceed the maximum overall diameter of triple build.

type 3 self-bonding: A triple build insulated magnet wire with a self-bonding outer coating. The maximum overall diameter does not exceed the maximum overall diameter of quadruple build.

conductor: A substance used to transmit electrical current.

covering: A fibrous or tape insulating material that is wound, wrapped, or braided around a bare or film coated conductor.

crack in film coating: An opening in the coating that exposes the bare conductor to view at the magnification specified in Part 3.

film coating: A continuous barrier of polymeric insulation.

film insulated wire: A film-coated conductor.

insulation: A dielectric medium that is applied to the conductor.

magnet wire: An insulated wire used primarily for the winding of coils in order to provide an electromagnetic field (also known as winding wire).

self-bonding overcoat: A material that is applied as an outer coating to insulated wire that, when activated, serves as a bonding agent.

visual examination: "Normal vision" shall be defined as 20/20 vision, with corrective lenses, if necessary.

1.4 MATERIALS

1.4.1 Conductors–Round, Square, and Rectangular, Copper and Aluminum

1.4.1.1 Surface Condition

Bare conductors shall be smooth, clean and free of dirt, discoloration, corrosion, scales or slivers consistent with good commercial practice. Rectangular and square conductors shall be free from sharp, rough or projecting edges. The corners on rectangular and square conductors shall be rounded so that the arcs of the radii merge smoothly into the flat surfaces. Wire with slight oxidation shall not be a cause for rejection.

1.4.1.2 Dimensions and Resistivity

The conductor, after insulating, shall comply with the requirements given for dimensions in the applicable section in Part 2. These resistivities correspond to a conductivity, in percent International Annealed Copper Standard (IACS) of 100 for copper, 61.8 for aluminum, and 60.6 for aluminum alloys at 20°C (68°F)(See NIST Handbook 100). The resistivity shall be determined in accordance with ASTM B193 and shall not exceed the following values:

	Maximum Resistivity	
Conductors	**Ohm-circular mil/ft**	**Ohm-mm^2/m**
Copper	10.371	0.017241
Aluminum	16.782	0.027898
Aluminum Alloys*	17.114	0.028450

* The use of aluminum alloys with a minimum conductivity 60.6% of the IACS is allowed in place of aluminum if agreed upon between the supplier and user.

© Copyright 2005 by the National Electrical Manufacturers Association.

Copyright National Electrical Manufacturers Association
Provided by IHS under license with NEMA
No reproduction or networking permitted without license from IHS
Not for Resale

This standards publication specifies a minimum conductivity for copper of 100 percent IACS and shall not exclude the possibility of the use of coppers over 100 percent IACS. Likewise, a conductivity of 61.8 percent for aluminum and 60.6 percent for aluminum alloys shall not exclude the use of aluminum or aluminum alloys with higher conductivities in either case. The current state of conductor processing has made possible the use of higher conductivity metals.

1.4.1.3 Characteristics of Aluminum

The mechanical, electrical, and chemical characteristics of aluminum magnet wire differ from those of copper magnet wire because of the inherent differences in the conductor materials. These differences are reflected in certain test procedures and/or performance requirements for aluminum magnet wire, such as elongation, adherence and flexibility, heat shock, scrape resistance, continuity, and thermal endurance.

Film coated aluminum round wire sizes 10 through 14 AWG (2.59 through 1.63 mm) shall have a yield strength not less than 7,000 psi (48.3 MPa) and a tensile strength not less than 13,000 psi (89.6 MPa); sizes 15 through 25 AWG (1.450 through 0.455 mm) shall have a yield strength not less than 8,000 psi (55.2 MPa) and a tensile strength not less than 13,000 psi (89.6 MPa). Large round sizes, all rectangular film coated and all fibrous covered wire shall have a yield strength not less than 9,000 psi (62.1 MPa). The yield strength shall be determined in accordance with the 0.2 percent offset method described in ASTM E 8.

NOTE–The testing procedure may include a pre-stretch of the specimen of 0.25 percent, which may remove small kinks, waves, and bends in the specimen prior to the test.

1.4.2 Insulating Materials

1.4.2.1 Film and fibers shall conform to the latest revisions of the applicable standards of ANSI, ASTM, or NEMA.

1.4.2.2 Various resins are referred to under insulating materials in Part 2. The resins specified may be modified. A modified resin is defined as a resin that has undergone a chemical change, or contains one or more additives to enhance certain performance or application characteristics. It must retain the essential chemical identity of the original resin and the coated conductor must meet all specified test requirements of the appropriate MW standard.

1.4.2.3 Various resins are identified under the insulating materials headings in Part 2. These resin descriptions are given with the primary generic type listed first and optional types listed in parentheses. Combinations of the primary generic resin with one or more of those in parentheses, which have been found by experience to meet all specified requirements, shall also be permitted.

1.4.2.4 Some magnet wire products described in Part 2 are constructed of multiple coats of different insulating materials. The requirements in Part 2 shall be met regardless of resin modifications or the amounts applied.

1.5 MANUFACTURING

1.5.1 Application of Insulation

Wire shall be coated or covered with insulation that meets the applicable requirements in Part 2 when the wire is taken directly from the spool, reel, or container.

Film coatings shall be essentially smooth and continuous, free from streakiness, blisters, and foreign material in accordance with good commercial practice.

When the wire is to be both film coated and fibrous or tape covered, the film-coated wire shall meet the applicable requirements of Part 2 before it is covered.

© Copyright 2005 by the National Electrical Manufacturers Association.

Copyright National Electrical Manufacturers Association
Provided by IHS under license with NEMA
No reproduction or networking permitted without license from IHS
Not for Resale

Fibrous coverings shall be wrapped firmly, closely, evenly, and continuously around the wire. When more than one layer of fibrous covering is applied, adjacent layers shall be wound in opposite directions.

When more than one layer of tape covering is applied, adjacent layers shall be permitted to be wound in the same or in opposite directions. The relation of the degree of lapping of the tape to the number of layers of tape is shown as follows:

Lap Description Percentage of Lap	Maximum Number of Tape Layers
0	1
Greater than 0 but less than or equal to 50	2
Greater than 50 but less than or equal to 66	3
Greater than 66 but less than or equal to 75	4

1.5.2 Intermediate Sizes

1.5.2.1 Round and Square

For wire sizes between AWG sizes, the increase in dimension due to the film coating shall be calculated according to the applicable formula presented in the definition for build, clause 1.3. The increase in dimension due to the fibrous or tape covering shall be the same as for the next lower AWG size (next larger diameter). Test procedures and values for all wire sizes between AWG sizes, for all insulation types, if not present in the appropriate test requirement table, shall be the same as for the next higher AWG size (next smaller diameter size).

1.5.2.2 Rectangular

The increase in dimensions due to the insulation for rectangular wires having dimensions not shown in the applicable Part 1 table or Part 2 specification shall be the same as that specified for the next larger thickness or width.

1.5.3 Joints

All magnet wire shall be one continuous length for each spool, reel, or container. Joints when present shall be either brazed with silver solder or welded. The number of joints shall be minimized. The surface of the wire at the joints shall be smooth and suitably insulated.

The dimensions of the wire at the joints shall be within the tolerances specified in Part 2.

For 30 AWG (0.254 mm) and larger diameter wire, the tensile strength of the joints shall be not less than 80 percent of the tensile strength of the wire 3 feet (914 mm) from the joint.

For 31 AWG (0.226 mm) and finer copper wire, the tensile strength of the joint shall be at least 20,000 psi (138 MPa).

1.5.4 Packaging

The wire shall be packed in such a manner as to protect it from damage during transit, and labeled in accordance with Appendix B as applicable.

The wire shall be wound evenly and compactly on spools or reels in accordance with Appendix B, or shall be deposited in containers uniformly and compactly and free from kinks. A minimum amount of neutral lubricant consistent with good packaging may be applied to the surface of film insulated wire.

© Copyright 2005 by the National Electrical Manufacturers Association.

Copyright National Electrical Manufacturers Association
Provided by IHS under license with NEMA
No reproduction or networking permitted without license from IHS
Not for Resale

1.6 TEST CONDITIONS AND PARAMETERS

1.6.1 Safety Statement

It is not the intent of this standard to address all of the safety issues associated with its use. It is the responsibility of the user of this standard to train personnel, establish proper health and safety procedures and be aware of local, state and national regulatory restrictions that may apply.

Some tests use materials which local, state, and national regulatory agencies have determined to be hazardous. These tests shall be performed under controlled conditions where the safety and protection of personnel shall be of prime consideration. Information and instructions contained in the Material Safety Data Sheets (MSDS) for handling and working with such products, shall be followed. Discharge of these chemicals to the environment must be controlled in accordance with all applicable regulations.

Certain test procedures require high voltage. It is important that the equipment be designed to comply with relevant electrical codes. Safety must be an integral part of the design. In such cases necessary precautions must be taken and test equipment manufacturers' recommendations shall be followed.

Some tests utilizing mechanical equipment may expose the operator to mechanical hazards. Care must be exercised to protect eyes, fingers, hands, and other body parts from injury.

In tests requiring elevated temperatures, precautions must be taken in handling materials exposed to heat to avoid skin burns.

1.6.2 Selection of Specimens

The requirements in Part 2 are applicable only to the size ranges indicated or as shown in Part 3.

If there is evidence that the wire on the surface of the package has been damaged, the damaged wire shall be discarded before specimens are taken for testing. Wire specimens shall be removed from the package in such a way as to prevent damage such as bending, stretching, kinking, etc.

As dielectric breakdown, dissipation factor and high voltage continuity test results are affected by the presence of skin oils, acids, salts, dust, dirt, etc., care should be exercised in the handling of test specimens.

1.6.3 Ambient Conditions of Test

Unless otherwise specified, all tests shall be made at room temperature, which shall be between 15ºC (59°F) and 40°C (104°F).

1.6.4 Power Frequency

Tests shall be conducted using 60-hertz power unless otherwise specified.

1.6.5 Mandrels

Mandrel diameters are expressed in multiples of "d" (the nominal round bare wire diameter or thickness or width of rectangular and square bare wires). The mandrel diameter shall be expressed in decimal dimensions to the nearest mil (0.001 in.) (0.025 mm).

For diameters smaller than 30 AWG (0.0100 in.) (0.254 mm), the mandrel diameter shall not vary from the specified diameter by more than one mil (0.025 mm). For diameters equal to or larger than 30 AWG, the mandrel diameter shall not vary from the specified diameter by more than 1 percent as measured to the nearest mil (0.025 mm).

© Copyright 2005 by the National Electrical Manufacturers Association.

Copyright National Electrical Manufacturers Association
Provided by IHS under license with NEMA
No reproduction or networking permitted without license from IHS
Not for Resale

1.6.6 Rectangular and Square Wire

References to rectangular wire in the test procedures in Part 3 include square wire unless otherwise indicated.

The dimension tables for rectangular and square copper and aluminum wire (Tables 1-8 through 1-11) for the applicable Part 2 specifications are based on a series of standardized AWG size subdivisions for thickness and width.

1.6.7 Round Wire

1.6.7.1 AWG Size

The nominal AWG bare wire diameters, in inches, in Table 1-23 were calculated using the basic mathematical characteristics of the American Wire Gauge:

$$X = (0.0050)(1.1229322)^{(36-N)}$$

Where:

X = nominal bare wire diameter in inches to be determined

0.0050 = nominal base diameter in inches for 36 AWG

1.1229322 = $\sqrt[39]{92}$ = the ratio of the diameter of any AWG size to the (smaller) diameter of the next larger AWG size.

36 = the AWG number of the base diameter

N = the equivalent AWG number of X, where N is normally a whole number

For sizes 4/0 to 2/0 AWG, N is a negative number from -3 to -1.

1.6.7.2 Ultra Fine Dimensions

Theoretical nominal bare copper wire diameters of sizes 45 – 56 AWG are in accordance with ASTM B 3. Conductor diameter tolerances in the applicable sections in Part 2 are shown as resistance values and shall be determined by measuring resistance of the wire in accordance with ASTM B 193.

1.6.7.3 Comparison Between AWG and IEC R-40 Series

The International Electrotechnical Commission has adopted the “Preferred Number” series for round and rectangular wire. Mathematically, the preferred numbers form a geometrical series (with a constant ratio between adjacent numbers) based on the 20th or 40th root of 10. These series are known as the R-20 and R-40 series. Preferred number series values in inches (rounded to the nearest 0.001 inch) represent a conversion from original computations in mm.

NOTE—The preceding paragraph is classified as Authorized Engineering Information.

Table 1-23 illustrates the relationship between the metric diameters in mm based on the IEC R-40 Series and the diameter of AWG sizes converted to mm.

1.6.8 Periodic Conformance

Periodic conformance tests as described in Part 3 (numbered 3.50 and higher) are performed at extended intervals. This assures continuing levels of certain inherent characteristics of materials and processes.

1.6.9 Retests

When a sample fails to meet a Part 2 requirement, the full test procedure in Part 3 shall be repeated twice. The wire shall be regarded as meeting the requirement if the results of both additional tests are satisfactory.

--`,,```,,,,````-`-`,,`,,`,`,,`---

© Copyright 2005 by the National Electrical Manufacturers Association.

Copyright National Electrical Manufacturers Association
Provided by IHS under license with NEMA
No reproduction or networking permitted without license from IHS
Not for Resale

1.7 UNITS OF MEASURE

For this standard, units are expressed in the inch-pound system, however temperatures are given in degrees Celsius. Where their approximate metric equivalents are included, they are given as information only. For direct conversion of inches to millimeters, multiply inches by the factor 25.4 (exact).

Rounding shall be in accordance with ASTM E 29.

All product dimensions listed in this publication are significant only to the number of digits shown to the right of the decimal point.

1.8 THERMAL CLASS OF MAGNET WIRE

The thermal class of magnet wire shall be based upon:

a. Temperature index in accordance with 3.58.1
b. Heat shock capability as required in individual specifications in Part 2. This shall be at least 20ºC higher than the Thermal Class temperature.

The thermal class given in each product specification in Part 2 is the class of the magnet wire and is not intended to be the class of the electrical equipment in which the wire is used.

It is expected that the magnet wire producer will supply the user, upon request, with test data in support of the thermal class of the magnet wire offered as meeting the requirements of Part 2 of this Standard. These data points should be given in such form as in accord with the provisions of ASTM D 2307.

The tests described in ASTM D 2307 are considered as design tests on a given insulation composition. It is not intended that they will be performed as production tests or on individual shipments.

NOTE 1–Copper will oxidize at an increasing rate at temperatures of 200°C and above and will also pit and become brittle at such temperatures. This oxidation will eventually damage the film coating and failure of the winding may result. Where extended life is desirable at temperatures exceeding 200°C, it is advisable to protect the copper conductor with a material such as silver or nickel, provided the material is compatible with the film coating or covering.

NOTE 2–Aluminum magnet wire products often exhibit a higher thermal index and different heat shock properties in comparison with film coated copper magnet wire. These differences should be considered when assigning the thermal class to film coated aluminum magnet wire.

1.9 ORDERING INFORMATION

1.9.1 Product Identification Number

When a description of an individual magnet wire product is needed the following format shall be used: the MW designation shall occupy the first two spaces, the type of insulation based on the NEMA MW specification shall occupy the 3rd through 5th spaces, the conductor type shall occupy the 6th space, the insulation build shall occupy the 7th space, additional information about the insulation (e.g. single fiber) shall occupy the 8th space, the size description shall occupy the 9th through 14th spaces. In the case of 1/2 sizes, a decimal point is used in the thirteenth place and a five in the fourteenth place. The external lubricant type shall occupy the 15th space. The film insulation color shall occupy the 16th and 17th spaces. Please refer to the following NEMA Product Identification Number (PIN) Table for more detailed information for use in developing NEMA Product Identification Numbers.

© Copyright 2005 by the National Electrical Manufacturers Association.

Copyright National Electrical Manufacturers Association
Provided by IHS under license with NEMA
No reproduction or networking permitted without license from IHS
Not for Resale

NEMA MW Product Identification Number Table

PIN Column Information	NEMA MW Symbol	Type of Insulation	Type of Conductor	Insulation Build	Additional Insulation Information	Size	Type of Lubricant	Insulation Color
PIN Spaces	**2**	**3**	**1**	**1**	**1**	**6**	**1**	**2**
PIN Position	**1-2**	**3-5**	**6**	**7**	**8**	**9-14**	**15**	**16-17**
PIN Data	MW	NEMA MW Standard (Number)	C- Copper A- Aluminum	B - Bare S – Single H – Heavy T – Triple Q – Quad 1 - Type 1 2 - Type 2 3 - Type 3	x a c d e f g h i j k l n	Round Start at far right with last digit. Square Actual Size (Decimal Nom. Bare x 1000) Rectangular Actual Size (Decimal Nom. Bare x 1000)	P - paraffin wax O - mineral oil S - special N - none U - unspecified	bl – blue bk – black br – brown gd - gold gn – green gy - gray iv – ivory nc - * or – orange pk – pink rd – red tn – tan tq – turquoise vt – violet wh – white yl - yellow

* no color added

Explanation of additional insulation information
x: film coated only
a: single glass fiber
c: single polyester glass fiber
d: double polyester glass fiber
e: single tape .002” 0 to 1/2 lap
f: single tape .002” 1/2 to 2/3 lap
g: double tape .002” 0 to 1/2 lap
h: double tape .002” 1/2 to 2/3 lap
i: single tape .003” 0 to 1/2 lap
j: single tape .003” 1/2 to 2/3 lap
k: single tape 1/2 to 2/3 lap
l: double tape 1/2 to 2/3 lap
n: double paper single cotton

Examples:	18 AWG Round Single Build MW 80-C red with paraffin wax lubrication would have a PIN of:	MW080CSx000018Prd
	16-1/2 AWG Round Heavy Build MW 35-C green with paraffin wax lubrication would have a PIN of:	MW035CHx0016.5Pgn
	6 AWG Square Heavy Build MW 36-C natural with oil lubrication would have a PIN of:	MW036CHx162162Onc
	0.100” x 0.230” Single Glass Fiber over Heavy Film, MW 42-C would have a PIN of:	MW042CHa100230Nnc

1.9.2 Minimum Ordering Data

Orders for materials in this Standards Publication should include the following information:

a. Quantity: total number of pounds (kilograms)
b. Product Identification Number (PIN)
c. Packaging: spool, reel, or container nomenclature in accordance with Appendix B
d. Other requirements as agreed to between supplier and user

© Copyright 2005 by the National Electrical Manufacturers Association.

Copyright National Electrical Manufacturers Association
Provided by IHS under license with NEMA
No reproduction or networking permitted without license from IHS
Not for Resale

Copyright National Electrical Manufacturers Association
Provided by IHS under license with NEMA
No reproduction or networking permitted without license from IHS
Not for Resale

Copyright National Electrical Manufacturers Association
Provided by IHS under license with NEMA
No reproduction or networking permitted without license from IHS

Table 1-1 (Inch)
DIMENSIONS FOR BARE AND FILM INSULATED ROUND MAGNET WIRE

AWG Size	Bare Wire Diameter			Single Build		Heavy Build		Triple Build		Quad Build		AWG Size
	Minimum	Nominal	Maximum	Minimum Increase in Diameter	Maximum Overall Diameter	Minimum Increase in Diameter	Maximum Overall Diameter	Minimum Increase in Diameter	Maximum Overall Diameter	Minimum Increase in Diameter	Maximum Overall Diameter	
4/0	0.4554	0.4600	0.4646	—	—	—	—	—	—	—	—	4/0
3/0	0.4055	0.4096	0.4137	—	—	—	—	—	—	—	—	3/0
2/0	0.3612	0.3648	0.3684	—	—	—	—	—	—	—	—	2/0
1/0	0.3170	0.3249	0.3281	—	—	—	—	—	—	—	—	1/0
1	0.2864	0.2893	0.2922	—	—	—	—	—	—	—	—	1
2	0.2550	0.2576	0.2602	—	—	—	—	—	—	—	—	2
3	0.2271	0.2294	0.2317	—	—	—	—	—	—	—	—	3
4	0.2023	0.2043	0.2057	—	—	0.0037	0.2098	—	—	—	—	4
4.5	0.1909	0.1928	0.1941	—	—	0.0037	0.1982	—	—	—	—	4.5
5	0.1801	0.1819	0.1832	—	—	0.0037	0.1873	—	—	—	—	5
5.5	0.1700	0.1717	0.1729	—	—	0.0036	0.1769	—	—	—	—	5.5
6	0.1604	0.1620	0.1631	—	—	0.0036	0.1672	—	—	—	—	6
6.5	0.1514	0.1529	0.1540	—	—	0.0036	0.1579	—	—	—	—	6.5
7	0.1429	0.1443	0.1453	—	—	0.0035	0.1492	—	—	—	—	7
7.5	0.1348	0.1362	0.1372	—	—	0.0035	0.1410	—	—	—	—	7.5
8	0.1272	0.1285	0.1294	0.0017	0.1314	0.0035	0.1332	—	—	—	—	8
8.5	0.1201	0.1213	0.1221	0.0017	0.1241	0.0034	0.1258	—	—	—	—	8.5
9	0.1133	0.1144	0.1153	0.0017	0.1173	0.0034	0.1190	—	—	—	—	9
9.5	0.1069	0.1080	0.1089	0.0017	0.1109	0.0034	0.1125	—	—	—	—	9.5
10	0.1009	0.1019	0.1027	0.0017	0.1047	0.0034	0.1064	—	—	0.0068	0.1098	10
10.5	0.0952	0.0962	0.0970	0.0017	0.0990	0.0033	0.1007	—	—	0.0066	0.1039	10.5
11	0.0898	0.0907	0.0914	0.0017	0.0934	0.0033	0.0952	—	—	0.0066	0.0983	11
11.5	0.0847	0.0856	0.0863	0.0016	0.0882	0.0033	0.0900	—	—	0.0066	0.0932	11.5
12	0.0800	0.0808	0.0814	0.0016	0.0833	0.0032	0.0851	—	—	0.0064	0.0881	12
12.5	0.0755	0.0763	0.0769	0.0016	0.0788	0.0032	0.0805	—	—	0.0064	0.0836	12.5
13	0.0713	0.0720	0.0726	0.0016	0.0745	0.0032	0.0762	—	—	0.0064	0.0793	13
13.5	0.0672	0.0679	0.0684	0.0016	0.0703	0.0032	0.0720	—	—	0.0064	0.0751	13.5
14	0.0635	0.0641	0.0647	0.0016	0.0666	0.0032	0.0682	0.0048	0.0698	0.0064	0.0714	14
14.5	0.0599	0.0605	0.0611	0.0016	0.0629	0.0031	0.0645	0.0047	0.0661	0.0063	0.0676	14.5
15	0.0565	0.0571	0.0577	0.0015	0.0594	0.0030	0.0610	0.0046	0.0625	0.0061	0.0640	15
15.5	0.0534	0.0539	0.0544	0.0015	0.0563	0.0030	0.0578	0.0045	0.0592	0.0059	0.0607	15.5
16	0.0503	0.0508	0.0513	0.0014	0.0531	0.0029	0.0545	0.0043	0.0560	0.0058	0.0574	16
16.5	0.0475	0.0480	0.0485	0.0014	0.0502	0.0028	0.0516	0.0042	0.0530	0.0056	0.0545	16.5

© Copyright 2005 by the National Electrical Manufacturers Association.

Not for Resale

AWG Size	Bare Wire Diameter			Single Build		Heavy Build		Triple Build		Quad Build		AWG Size
	Minimum	Nominal	Maximum	Minimum Increase in Diameter	Maximum Overall Diameter	Minimum Increase in Diameter	Maximum Overall Diameter	Minimum Increase in Diameter	Maximum Overall Diameter	Minimum Increase in Diameter	Maximum Overall Diameter	
17	0.0448	0.0453	0.0458	0.0014	0.0475	0.0028	0.0488	0.0041	0.0502	0.0055	0.0516	17
17.5	0.0423	0.0427	0.0431	0.0013	0.0449	0.0027	0.0462	0.0040	0.0476	0.0054	0.0489	17.5
18	0.0399	0.0403	0.0407	0.0013	0.0424	0.0026	0.0437	0.0039	0.0450	0.0052	0.0464	18
18.5	0.0376	0.0380	0.0384	0.0013	0.0400	0.0025	0.0413	0.0038	0.0426	0.0051	0.0441	18.5
19	0.0355	0.0359	0.0363	0.0012	0.0379	0.0025	0.0391	0.0037	0.0404	0.0050	0.0418	19
19.5	0.0336	0.0339	0.0342	0.0012	0.0359	0.0024	0.0371	0.0036	0.0383	0.0048	0.0397	19.5
20	0.0317	0.0320	0.0323	0.0012	0.0340	0.0024	0.0351	0.0035	0.0363	0.0047	0.0377	20
20.5	0.0299	0.0302	0.0305	0.0011	0.0321	0.0023	0.0332	0.0034	0.0344	0.0046	0.0358	20.5
21	0.0282	0.0285	0.0288	0.0011	0.0303	0.0022	0.0315	0.0034	0.0326	0.0045	0.0340	21
21.5	0.0266	0.0269	0.0272	0.0011	0.0287	0.0022	0.0298	0.0033	0.0309	0.0044	0.0323	21.5
22	0.0250	0.0253	0.0256	0.0011	0.0270	0.0021	0.0281	0.0032	0.0292	0.0043	0.0306	22
22.5	0.0237	0.0239	0.0241	0.0010	0.0257	0.0021	0.0267	0.0031	0.0277	0.0041	0.0291	22.5
23	0.0224	0.0226	0.0228	0.0010	0.0243	0.0020	0.0253	0.0030	0.0263	0.0040	0.0277	23
23.5	0.0211	0.0213	0.0215	0.0010	0.0230	0.0020	0.0240	0.0030	0.0249	0.0039	0.0264	23.5
24	0.0199	0.0201	0.0203	0.0010	0.0217	0.0019	0.0227	0.0029	0.0236	0.0038	0.0250	24
24.5	0.0188	0.0190	0.0192	0.0009	0.0206	0.0019	0.0215	0.0028	0.0224	0.0037	0.0238	24.5
25	0.0177	0.0179	0.0181	0.0009	0.0194	0.0018	0.0203	0.0027	0.0212	0.0036	0.0226	25
25.5	0.0167	0.0169	0.0171	0.0009	0.0184	0.0018	0.0193	0.0027	0.0202	0.0036	0.0215	25.5
26	0.0157	0.0159	0.0161	0.0009	0.0173	0.0017	0.0182	0.0026	0.0191	0.0035	0.0204	26
26.5	0.0149	0.0150	0.0152	0.0008	0.0165	0.0017	0.0173	0.0025	0.0182	0.0034	0.0194	26.5
27	0.0141	0.0142	0.0143	0.0008	0.0156	0.0016	0.0165	0.0025	0.0173	0.0033	0.0185	27
27.5	0.0133	0.0134	0.0135	0.0008	0.0148	0.0016	0.0156	0.0024	0.0164	0.0032	0.0175	27.5
28	0.0125	0.0126	0.0127	0.0008	0.0140	0.0016	0.0147	0.0023	0.0155	0.0031	0.0167	28
28.5	0.0118	0.0119	0.0120	0.0008	0.0132	0.0015	0.0140	0.0023	0.0147	0.0030	0.0158	28.5
29	0.0112	0.0113	0.0114	0.0007	0.0126	0.0015	0.0133	0.0022	0.0141	0.0030	0.0151	29
29.5	0.0105	0.0106	0.0107	0.0007	0.0118	0.0014	0.0126	0.0022	0.0133	0.0029	0.0143	29.5

Table continued on next page.

Copyright National Electrical Manufacturers Association
Provided by IHS under license with NEMA
No reproduction or networking permitted without license from IHS
Not for Resale
© Copyright 2005 by the National Electrical Manufacturers Association.

Copyright National Electrical Manufacturers Association
Provided by IHS under license with NEMA
No reproduction or networking permitted without license from IHS

Table 1-1 (Inch) Continued

AWG Size	Bare Wire Diameter			Single Build		Heavy Build		Triple Build		Quad Build		AWG Size
	Minimum	Nominal	Maximum	Minimum Increase in Diameter	Maximum Overall Diameter	Minimum Increase in Diameter	Maximum Overall Diameter	Minimum Increase in Diameter	Maximum Overall Diameter	Minimum Increase in Diameter	Maximum Overall Diameter	
30	0.0099	0.0100	0.0101	0.0007	0.0112	0.0013	0.0119	0.0020	0.0128	0.0026	0.0136	30
31	0.0088	0.0089	0.0090	0.0006	0.0100	0.0012	0.0108	0.0018	0.0114	0.0024	0.0124	31
32	0.0079	0.0080	0.0081	0.0006	0.0091	0.0011	0.0098	0.0017	0.0103	0.0022	0.0113	32
33	0.0070	0.0071	0.0072	0.0005	0.0081	0.0010	0.0088	0.0015	0.0092	0.0020	0.0102	33
34	0.0062	0.0063	0.0064	0.0005	0.0072	0.0009	0.0078	0.0014	0.0082	0.0019	0.0091	34
35	0.0055	0.0056	0.0057	0.0004	0.0064	0.0009	0.0070	0.0013	0.0074	0.0017	0.0082	35
36	0.0049	0.0050	0.0051	0.0004	0.0058	0.0008	0.0063	0.0012	0.0067	0.0016	0.0074	36
37	0.0044	0.0045	0.0046	0.0004	0.0053	0.0007	0.0057	0.0011	0.0060	0.0014	0.0067	37
38	0.0039	0.0040	0.0041	0.0003	0.0047	0.0007	0.0051	0.0010	0.0054	0.0013	0.0060	38
39	0.0034	0.0035	0.0036	0.0003	0.0041	0.0006	0.0045	0.0009	0.0048	0.0012	0.0053	39
40	0.0030	0.0031	0.0032	0.0003	0.0037	0.0005	0.0040	0.0008	0.0043	0.0011	0.0047	40
41	0.0027	0.0028	0.0029	0.0003	0.0034	0.0005	0.0036	0.0008	0.0040	0.0010	0.0043	41
42	0.0024	0.0025	0.0026	0.0002	0.0030	0.0005	0.0033	0.0007	0.0036	0.0009	0.0039	42
43	0.0021	0.0022	0.0023	0.0002	0.0026	0.0004	0.0029	0.0006	0.0032	0.0008	0.0035	43
44	0.0019	0.0020	0.0021	0.0002	0.0024	0.0004	0.0027	0.0006	0.0030	0.0008	0.0033	44
	Theoretical Nominal Bare Diameter ‡											
45		0.00176		0.00020	0.00220	0.0004	0.0024	0.0005	0.0027	0.0007	0.0029	45
46		0.00157		0.00020	0.00200	0.0003	0.0021	0.0005	0.0024	0.0007	0.0026	46
47		0.00140		0.00010	0.00170	0.0003	0.0019	—	—	—	—	47
48		0.00124		0.00010	0.00150	0.0002	0.0017	—	—	—	—	48
49		0.00111		0.00010	0.00130	0.0002	0.0015	—	—	—	—	49
50		0.00099		0.00010	0.00120	0.0002	0.0014	—	—	—	—	50
51		0.00088		0.00010	0.00110	—	—	—	—	—	—	51
52		0.00078		0.00010	0.00100	—	—	—	—	—	—	52
53		0.00070		0.00005	0.00085	—	—	—	—	—	—	53
54		0.00062		0.00005	0.00075	—	—	—	—	—	—	54
55		0.00055		0.00005	0.00070	—	—	—	—	—	—	55
56		0.00049		0.00005	0.00065	—	—	—	—	—	—	56

* See Table 1-2 for equivalent dimensions in mm

‡ Theoretical nominal bare wire diameter by resistance, see 1.6.7.2.

See Table 1-3 for resistance metric equivalents.

© Copyright 2005 by the National Electrical Manufacturers Association.

Not for Resale

--`,,```,,,,````-`-`,,`,,`,`,,`---

Copyright National Electrical Manufacturers Association
Provided by IHS under license with NEMA
No reproduction or networking permitted without license from IHS
Not for Resale

Table 1-1 (mm)
DIMENSIONS FOR BARE AND FILM INSULATED ROUND MAGNET WIRE

AWG Size	Bare Wire Diameter			Single Build		Heavy Build		Triple Build		Quad Build		AWG Size
	Minimum	Nominal	Maximum	Minimum Increase in Diameter	Maximum Overall Diameter	Minimum Increase in Diameter	Maximum Overall Diameter	Minimum Increase in Diameter	Maximum Overall Diameter	Minimum Increase in Diameter	Maximum Overall Diameter	
4/0	11.567	11.684	11.801	—	—	—	—	—	—	—	—	4/0
3/0	10.300	10.404	10.508	—	—	—	—	—	—	—	—	3/0
2/0	9.174	9.266	9.357	—	—	—	—	—	—	—	—	2/0
1/0	8.171	8.252	8.334	—	—	—	—	—	—	—	—	1/0
1	7.275	7.348	7.422	—	—	—	—	—	—	—	—	1
2	6.477	6.543	6.609	—	—	—	—	—	—	—	—	2
3	5.768	5.827	5.885	—	—	—	—	—	—	—	—	3
4	5.138	5.189	5.225	—	—	0.094	5.330	—	—	—	—	4
4.5	4.849	4.897	4.931	—	—	0.094	5.035	—	—	—	—	4.5
5	4.575	4.620	4.666	—	—	0.094	4.757	—	—	—	—	5
5.5	4.318	4.361	4.392	—	—	0.091	4.494	—	—	—	—	5.5
6	4.074	4.115	4.155	—	—	0.091	4.246	—	—	—	—	6
6.5	3.846	3.884	3.911	—	—	0.091	4.012	—	—	—	—	6.5
7	3.630	3.665	3.701	—	—	0.089	3.790	—	—	—	—	7
7.5	3.424	3.459	3.484	—	—	0.089	3.581	—	—	—	—	7.5
8	3.231	3.264	3.297	0.043	3.338	0.089	3.383	—	—	—	—	8
8.5	3.051	3.081	3.103	0.043	3.153	0.086	3.196	—	—	—	—	8.5
9	2.878	2.906	2.929	0.043	2.980	0.086	3.023	—	—	—	—	9
9.5	2.715	2.743	2.765	0.043	2.816	0.086	2.859	—	—	—	—	9.5
10	2.563	2.588	2.609	0.043	2.660	0.086	2.703	—	—	0.173	2.789	10
10.5	2.418	2.443	2.463	0.043	2.514	0.084	2.557	—	—	0.168	2.638	10.5
11	2.281	2.304	2.322	0.043	2.373	0.084	2.418	—	—	0.168	2.497	11
11.5	2.151	2.174	2.192	0.041	2.240	0.084	2.287	—	—	0.168	2.367	11.5
12	2.032	2.052	2.069	0.041	2.117	0.081	2.163	—	—	0.163	2.239	12
12.5	1,918	1.938	1.954	0.041	2.002	0.081	2.045	—	—	0.163	2.124	12.5
13	1.811	1.829	1.843	0.041	1.892	0.081	1.934	—	—	0.163	2.014	13
13.5	1.707	1.725	1.738	0.041	1,787	0.081	1.829	—	—	0.163	1.909	13.5
14	1.613	1.628	1.643	0.041	1.692	0.081	1.732	0.122	1.773	0.163	1.814	14
14.5	1.521	1.537	1.552	0.041	1.598	0.079	1.638	0.119	1.679	0.160	1.717	14.5
15	1.435	1.450	1.466	0.038	1.509	0.076	1.549	0.117	1.588	0.155	1.626	15
15.5	1.356	1.369	1.382	0.038	1.430	0.076	1.468	0.114	1.504	0.150	1.542	15.5
16	1.278	1.290	1.303	0.036	1.349	0.074	1.384	0.109	1.422	0.147	1.458	16
16.5	1.207	1.219	1.232	0.036	1.275	0.071	1.311	0.107	1.346	0.142	1.384	16.5
17	1.138	1.151	1.163	0.036	1.207	0.071	1.240	0.104	1.275	0.140	1.311	17

© Copyright 2005 by the National Electrical Manufacturers Association.

Copyright National Electrical Manufacturers Association
Provided by IHS under license with NEMA
No reproduction or networking permitted without license from IHS

© Copyright 2005 by the National Electrical Manufacturers Association.

AWG Size	Bare Wire Diameter			Single Build		Heavy Build		Triple Build		Quad Build		AWG Size
	Minimum	Nominal	Maximum	Minimum Increase in Diameter	Maximum Overall Diameter	Minimum Increase in Diameter	Maximum Overall Diameter	Minimum Increase in Diameter	Maximum Overall Diameter	Minimum Increase in Diameter	Maximum Overall Diameter	
17.5	1.074	1.085	1.095	0.033	1.140	0.069	1.173	0.102	1.209	0.137	1.242	17.5
18	1.013	1.024	1.034	0.033	1.077	0.066	1.110	0.099	1.143	0.132	1.179	18
18.5	0.955	0.965	0.975	0.033	1.016	0.064	1.049	0.097	1.082	0.130	1.119	18.5
19	0.902	0.912	0.922	0.030	0.963	0.064	0.993	0.094	1.026	0.127	1.063	19
19.5	0.853	0.861	0.869	0;030	0.912	0.061	0.942	0.091	0.973	0.122	1.009	19.5
20	0.805	0.813	0.820	0.030	0.864	0.061	0.892	0.089	0.922	0.119	0.958	20
20.5	0.759	0.767	0.775	0.028	0.815	0.058	0.843	0.086	0.874	0.117	0.909	20.5
21	0.716	0.724	0.732	0.028	0.770	0.056	0.800	0.086	0.828	0.114	0.863	21
21.5	0.676	0.683	0.691	0.028	0.729	0.056	0.757	0.084	0.785	0.112	0.819	21.5
22	0.635	0.643	0.650	0.028	0.686	0.053	0.714	0.081	0.742	0.109	0.778	22
22.5	0.602	0.607	0.612	0.025	0.653	0.053	0.678	0.079	0.704	0.104	0.738	22.5
23	0.569	0.574	0.579	0.025	0.617	0.051	0.643	0.076	0.668	0.102	0.704	23
23.5	0.536	0.541	0.546	0.025	0.584	0.051	0.610	0.076	0.632	0.099	0.669	23.5
24	0.505	0.511	0.516	0.025	0.551	0.048	0.577	0.074	0.599	0.097	0.635	24
24.5	0.478	0.483	0.488	0.023	0.523	0.048	0.546	0.071	0.569	0.094	0.605	24.5
25	0.450	0.455	0.460	0.023	0.493	0.046	0.516	0.069	0.538	0.091	0.575	25
25.5	0.424	0.429	0.434	0.023	0.467	0.046	0.490	0.069	0.513	0.091	0.546	25.5
26	0.399	0.404	0.409	0.023	0.439	0.043	0.462	0.066	0.485	0.089	0.519	26
26.5	0.378	0.381	0.386	0.020	0.419	0.043	0.439	0.064	0.462	0.086	0.493	26.5
27	0.358	0.361	0.363	0.020	0.396	0.041	0.419	0.064	0.439	0.084	0.469	27
27.5	0.338	0.340	0.343	0.020	0.376	0.041	0.396	0.061	0.417	0.081	0.446	27.5
28	0.318	0.320	0.323	0.020	0.356	0.041	0.373	0.058	0.394	0.079	0.423	28
28.5	0.300	0.302	0.305	0.020	0.335	0.038	0.356	0.058	0.373	0.076	0.423	28.5
29	0.284	0.287	0.290	0.018	0.320	0.038	0.338	0.056	0.358	0.076	0.382	29
29.5	0.267	0.269	0.272	0.018	0.300	0.036	0.320	0.056	0.338	0.074	0.363	29.5

Table continued on next page.

Not for Resale

Copyright National Electrical Manufacturers Association
Provided by IHS under license with NEMA
No reproduction or networking permitted without license from IHS

Table 1-1 (mm) Continued

AWG Size	Bare Wire Diameter			Single Build		Heavy Build		Triple Build		Quad Build		AWG Size
	Minimum	Nominal	Maximum	Minimum Increase in Diameter	Maximum Overall Diameter	Minimum Increase in Diameter	Maximum Overall Diameter	Minimum Increase in Diameter	Maximum Overall Diameter	Minimum Increase in Diameter	Maximum Overall Diameter	
30	0.251	0.254	0.257	0.018	0.284	0.033	0.302	0.051	0.325	0.066	0.345	30
31	0.224	0.226	0.229	0.015	0.254	0.030	0.274	0.046	0.290	0.061	0.315	31
32	0.201	0.203	0.206	0.015	0.231	0.028	0.249	0.043	0.262	0.056	0.287	32
33	0.178	0.180	0.183	0.013	0.206	0.025	0.224	0.038	0.234	0.051	0.259	33
34	0.157	0.160	0.163	0.013	0.183	0.023	0.198	0.036	0.208	0.048	0.231	34
35	0.140	0.142	0.145	0.010	0.163	0.023	0.178	0.033	0.188	0.043	0.208	35
36	0.124	0.127	0.130	0.010	0.147	0.020	0.160	0.030	0.170	0.041	0.188	36
37	0.112	0.114	0.117	0.010	0.135	0.018	0.145	0.028	0.152	0.036	0.170	37
38	0.099	0.102	0.104	0.008	0.119	0.018	0.130	0.025	0.137	0.033	0.152	38
39	0.086	0.089	0.091	0.008	0.104	0.015	0.114	0.023	0.122	0.030	0.135	39
40	0.076	0.079	0.081	0.008	0.094	0.013	0.102	0.020	0.109	0.028	0.119	40
41	0.069	0.071	0.074	0.008	0.086	0.013	0.091	0.020	0.102	0.025	0.109	41
42	0.061	0.064	0.066	0.005	0.076	0.013	0.084	0.018	0.091	0.023	0.099	42
43	0.053	0.056	0.058	0.005	0.066	0.010	0.074	0.015	0.081	0.020	0.089	43
44	0.048	0.051	0.053	0.005	0.061	0.010	0.069	0.015	0.076	0.020	0.084	44
	Theoretical Nominal Bare Diameter ‡											
45		0.0447		0.005	0.0559	0.0010	0.0610	0.0127	0.0686	0.0178	0.0737	45
46		0.0399		0.005	0.0508	0.0076	0.0533	0.0127	0.0610	0.0178	0.0660	46
47		0.0356		0.0025	0.0432	0.0076	0.0483	—	—	—	—	47
48		0.0315		0.0025	0.0381	0.0051	0.0432	—	—	—	—	48
49		0.0282		0.0025	0.0330	0.0051	0.0381	—	—	—	—	49
50		0.0251		0.0025	0.0305	0.0051	0.0356	—	—	—	—	50
51		0.0224		0.0025	0.0279	—	—	—	—	—	—	51
52		0.0198		0.0025	0.0254	—	—	—	—	—	—	52
53		0.0178		0.0013	0.0216	—	—	—	—	—	—	53
54		0.0157		0.0013	0.0191	—	—	—	—	—	—	54
55		0.0140		0.0013	0.0178	—	—	—	—	—	—	55
56		0.0124		0.0013	0.0165	—	—	—	—	—	—	56

‡ Theoretical nominal bare wire diameter by resistance, see 1.6.7.2.

© Copyright 2005 by the National Electrical Manufacturers Association.

Not for Resale

Table 1-2
ROUND COPPER WIRE, ULTRA FINE SIZES BY RESISTANCE

Resistance per foot

AWG Size	Ohms per foot at 20°C at 100% IACS		
	Minimum	Nominal	Maximum
45	3.080	3.348	3.616
46	3.870	4.207	4.544
47	4.868	5.291	5.714
48	6.205	6.745	7.285
49	7.744	8.417	9.090
50	9.734	10.58	11.43
51	12.32	13.39	14.46
52	15.69	17.05	18.41
53	19.48	21.17	22.86
54	24.82	26.98	29.14
55	31.54	34.28	37.02
56	39.73	43.19	46.64

Resistance per meter

AWG Size	Ohms per meter at 20°C at 100% IACS		
	Minimum	Nominal	Maximum
45	10.11	10.98	11.86
46	12.70	13.80	14.91
47	15.97	17.36	18.75
48	20.36	22.13	23.90
49	25.41	27.62	29.82
50	31.94	34.71	37.50
51	40.42	43.93	47.44
52	51.48	55.94	60.40
53	63.91	69.46	75.00
54	81.43	88.52	95.60
55	103.5	112.5	121.5
56	130.3	141.7	153.0

© Copyright 2005 by the National Electrical Manufacturers Association.

Copyright National Electrical Manufacturers Association
Provided by IHS under license with NEMA
No reproduction or networking permitted without license from IHS
Not for Resale

Table 1-3 (Inch)
DIMENSIONS FOR ROUND FILM INSULATED SELF-BONDING MAGNET WIRE

AWG Size	Bare Wire Diameter			Type 1 Self-Bonding			Type 2 Self-Bonding			Type 3 Self-Bonding			AWG Size
				Minimum Increase		Maximum	Minimum Increase		Maximum	Minimum Increase		Maximum	
	Minimum	Nominal	Maximum	Film Coating	Self-Bond	Overall Diameter	Film Coating	Self-Bond	Overall Diameter	Film Coating	Self-Bond	Overall Diameter	
14	0.0635	0.0641	0.0647	0.0016	0.0006	0.0682	0.0032	0.0006	0.0698	0.0048	0.0006	0.0714	14
15	0.0565	0.0571	0.0577	0.0015	0.0006	0.0610	0.0030	0.0006	0.0625	0.0046	0.0006	0.0640	15
16	0.0503	0.0508	0.0513	0.0014	0.0006	0.0545	0.0029	0.0006	0.0560	0.0043	0.0006	0.0574	16
17	0.0448	0.0453	0.0458	0.0014	0.0006	0.0488	0.0028	0.0006	0.0502	0.0041	0.0006	0.0516	17
18	0.0399	0.0403	0.0407	0.0013	0.0006	0.0437	0.0026	0.0006	0.0450	0.0039	0.0006	0.0464	18
19	0.0355	0.0359	0.0363	0.0012	0.0006	0.0391	0.0025	0.0006	0.0404	0.0037	0.0006	0.0418	19
20	0.0317	0.0320	0.0323	0.0012	0.0005	0.0351	0.0024	0.0005	0.0363	0.0035	0.0005	0.0376	20
21	0.0282	0.0285	0.0288	0.0011	0.0005	0.0315	0.0022	0.0005	0.0326	0.0034	0.0005	0.0339	21
22	0.0250	0.0253	0.0256	0.0011	0.0005	0.0281	0.0021	0.0005	0.0292	0.0032	0.0005	0.0305	22
23	0.0224	0.0226	0.0228	0.0010	0.0005	0.0253	0.0020	0.0005	0.0263	0.0030	0.0005	0.0277	23
24	0.0199	0.0201	0.0203	0.0010	0.0005	0.0227	0.0019	0.0005	0.0236	0.0029	0.0005	0.0250	24
25	0.0177	0.0179	0.0181	0.0009	0.0005	0.0203	0.0018	0.0005	0.0212	0.0027	0.0005	0.0226	25
26	0.0157	0.0159	0.0161	0.0009	0.0005	0.0182	0.0017	0.0005	0.0191	0.0026	0.0005	0.0204	26
27	0.0141	0.0142	0.0143	0.0008	0.0005	0.0165	0.0016	0.0005	0.0173	0.0025	0.0005	0.0184	27
28	0.0125	0.0126	0.0127	0.0008	0.0005	0.0147	0.0016	0.0005	0.0155	0.0023	0.0005	0.0165	28
29	0.0112	0.0113	0.0114	0.0007	0.0004	0.0133	0.0015	0.0004	0.0141	0.0022	0.0004	0.0151	29
30	0.0099	0.0100	0.0101	0.0007	0.0004	0.0119	0.0013	0.0004	0.0128	0.0020	0.0004	0.0136	30
31	0.0088	0.0089	0.0090	0.0006	0.0004	0.0108	0.0012	0.0004	0.0114	–	–	–	31
32	0.0079	0.0080	0.0081	0.0006	0.0004	0.0098	0.0011	0.0004	0.0103	–	–	–	32
33	0.0070	0.0071	0.0072	0.0005	0.0003	0.0088	0.0010	0.0003	0.0092	–	–	–	33
34	0.0062	0.0063	0.0064	0.0005	0.0003	0.0078	0.0009	0.0003	0.0082	–	–	–	34
35	0.0055	0.0056	0.0057	0.0004	0.0003	0.0070	0.0009	0.0003	0.0074	–	–	–	35
36	0.0049	0.0050	0.0051	0.0004	0.0003	0.0063	0.0008	0.0003	0.0067	–	–	–	36
37	0.0044	0.0045	0.0046	0.0004	0.0003	0.0057	0.0007	0.0003	0.0060	–	–	–	37
38	0.0039	0.0040	0.0041	0.0003	0.0002	0.0051	0.0007	0.0002	0.0054	–	–	–	38
39	0.0034	0.0035	0.0036	0.0003	0.0002	0.0045	0.0006	0.0002	0.0048	–	–	–	39
40	0.0030	0.0031	0.0032	0.0003	0.0002	0.0040	0.0005	0.0002	0.0043	–	–	–	40
41	0.0027	0.0028	0.0029	0.0003	0.0002	0.0036	0.0005	0.0002	0.0040	–	–	–	41
42	0.0024	0.0025	0.0026	0.0002	0.0002	0.0033	0.0005	0.0002	0.0036	–	–	–	42
43	0.0021	0.0022	0.0023	0.0002	0.0001	0.0029	0.0004	0.0001	0.0032	–	–	–	43
44	0.0019	0.0020	0.0021	0.0002	0.0001	0.0027	0.0004	0.0001	0.0030	–	–	–	44
	Theoretical Nominal Bare Diameter ‡												
45		0.00176		0.0002	0.0001	0.0024	0.0004	0.0001	0.0027	–	–	–	45
46		0.00157		0.0002	0.0001	0.0021	0.0003	0.0001	0.0024	–	–	–	46
47		0.00140		0.0001	0.0001	0.0019	0.0003	0.0001	0.00210	–	–	–	47
48		0.00124		0.0001	0.0001	0.0017	0.0002	0.0001	0.00185	–	–	–	48
49		0.00111		0.0001	0.0001	0.0015	0.0002	0.0001	0.00170	–	–	–	49
50		0.00099		0.0001	0.0001	0.0014	0.0002	0.0001	0.00160	–	–	–	50
51		0.00088		0.0001	0.0001	0.0013	–	–	–	–	–	–	51
52		0.00078		0.0001	0.00005	0.00115	–	–	–	–	–	–	52

‡ Theoretical nominal bare wire diameter by resistance, see 1.6.7.2

© Copyright 2005 by the National Electrical Manufacturers Association.

Copyright National Electrical Manufacturers Association
Provided by IHS under license with NEMA
No reproduction or networking permitted without license from IHS
Not for Resale

Table 1-3 (mm)
DIMENSIONS FOR ROUND FILM INSULATED SELF-BONDING MAGNET WIRE

AWG Size	Bare Wire Diameter			Type 1 Self-Bonding			Type 2 Self-Bonding			Type 3 Self-Bonding			AWG Size
				Minimum Increase		Maximum	Minimum Increase		Maximum	Minimum Increase		Maximum	
	Minimum	Nominal	Maximum	Film Coating	Self-Bond	Overall Diameter	Film Coating	Self-Bond	Overall Diameter	Film Coating	Self-Bond	Overall Diameter	
14	1.613	1.628	1.643	0.041	0.015	1.732	0.081	0.015	1.773	0.122	0.015	1.814	14
15	1.435	1.450	1.466	0.038	0.015	1.549	0.076	0.015	1.588	0.117	0.015	1.626	15
16	1.278	1.290	1.303	0.036	0.015	1.384	0.074	0.015	1.422	0.109	0.015	1.458	16
17	1.138	1.151	1.163	0.036	0.015	1.240	0.071	0.015	1.275	0.104	0.015	1.311	17
18	1.013	1.024	1.034	0.033	0.015	1.110	0.066	0.015	1.143	0.099	0.015	1.179	18
19	0.902	0.912	0.922	0.030	0.015	0.993	0.064	0.015	1.026	0.094	0.015	1.062	19
20	0.805	0.813	0.820	0.030	0.013	0.892	0.061	0.013	0.922	0.089	0.013	0.955	20
21	0.716	0.724	0.731	0.028	0.013	0.800	0.056	0.013	0.828	0.086	0.013	0.861	21
22	0.635	0.643	0.650	0.028	0.013	0.714	0.053	0.013	0.742	0.081	0.013	0.775	22
23	0.569	0.574	0.579	0.025	0.013	0.643	0.051	0.013	0.668	0.076	0.013	0.704	23
24	0.505	0.511	0.516	0.025	0.013	0.577	0.048	0.013	0.599	0.074	0.013	0.635	24
25	0.450	0.455	0.460	0.023	0.013	0.516	0.046	0.013	0.538	0.069	0.013	0.574	25
26	0.399	0.404	0.409	0.023	0.013	0.462	0.043	0.013	0.485	0.066	0.013	0.518	26
27	0.358	0.361	0.363	0.020	0.013	0.419	0.041	0.013	0.439	0.064	0.013	0.467	27
28	0.318	0.320	0.323	0.020	0.013	0.373	0.041	0.013	0.394	0.058	0.013	0.419	28
29	0.284	0.287	0.290	0.018	0.010	0.338	0.038	0.010	0.358	0.056	0.010	0.384	29
30	0.251	0.254	0.257	0.018	0.010	0.302	0.033	0.010	0.325	0.050	0.010	0.345	30
31	0.224	0.226	0.229	0.015	0.010	0.274	0.030	0.010	0.290	–	–	–	31
32	0.201	0.203	0.206	0.015	0.010	0.249	0.028	0.010	0.262	–	–	–	32
33	0.178	0.180	0.183	0.013	0.008	0.224	0.025	0.008	0.234	–	–	–	33
34	0.157	0.160	0.163	0.013	0.008	0.198	0.023	0.008	0.208	–	–	–	34
35	0.140	0.142	0.145	0.010	0.008	0.178	0.023	0.008	0.188	–	–	–	35
36	0.124	0.127	0.130	0.010	0.008	0.160	0.020	0.008	0.170	–	–	–	36
37	0.112	0.114	0.117	0.0010	0.008	0.145	0.018	0.008	0.152	–	–	–	37
38	0.099	0.102	0.104	0.008	0.005	0.130	0.018	0.005	0.137	–	–	–	38
39	0.086	0.089	0.091	0.008	0.005	0.114	0.015	0.005	0.122	–	–	–	39
40	0.076	0.079	0.081	0.008	0.005	0.102	0.013	0.005	0.109	–	–	–	40
41	0.069	0.071	0.074	0.008	0.005	0.091	0.013	0.005	0.102	–	–	–	41
42	0.061	0.064	0.066	0.005	0.005	0.084	0.013	0.005	0.091	–	–	–	42
43	0.053	0.056	0.058	0.005	0.003	0.074	0.010	0.003	0.081	–	–	–	43
44	0.048	0.051	0.053	0.005	0.003	0.069	0.010	0.003	0.076	–	–	–	44
	Theoretical Nominal Bare Diameter ‡												
45		0.0447		0.005	0.0025	0.0610	0.0010	0.0025	0.0686	–	–	–	45
46		0.0399		0.005	0.0025	0.0533	0.0076	0.0025	0.0610	–	–	–	46
47		0.0356		0.0025	0.0025	0.0483	0.0076	0.0025	0.0533	–	–	–	47
48		0.0315		0.0025	0.0025	0.0432	0.0051	0.0025	0.0470	–	–	–	48
49		0.0282		0.0025	0.0025	0.0381	0.0051	0.0025	0.0432	–	–	–	49
50		0.0251		0.0025	0.0025	0.0356	0.0051	0.0025	0.0406	–	–	–	50
51		0.0224		0.0025	0.0025	0.0330	–	–	–	–	–	–	51
52		0.0198		0.0025	0.0013	0.0292	–	–	–	–	–	–	52

‡ Theoretical nominal bare wire diameter by resistance; see 1.6.7.2.

© Copyright 2005 by the National Electrical Manufacturers Association.

Copyright National Electrical Manufacturers Association
Provided by IHS under license with NEMA
No reproduction or networking permitted without license from IHS
Not for Resale

Table 1-4 (Inch)
DIMENSIONS FOR SINGLE GLASS FIBER COVERED ROUND BARE, SINGLE FILM COATED AND HEAVY FILM COATED WIRE

AWG	Bare Wire Diameter			Minimum Increase Single glass fiber	Maximum Overall Diameter, Single glass fiber covered			AWG
Size	Minimum	Nominal	Maximum	covering	Bare	Single Film	Heavy Film	Size
4/0	0.4554	0.4600	0.4646	0.0045	0.4716	–	–	4/0
3/0	0.4055	0.4096	0.4137	0.0045	0.4207	–	–	3/0
2/0	0.3612	0.3648	0.3684	0.0045	0.3754	–	–	2/0
1/0	0.3170	0.3249	0.3281	0.0045	0.3351	–	–	1/0
1	0.2864	0.2893	0.2922	0.0045	0.2992	–	–	1
2	0.2550	0.2576	0.2602	0.0045	0.2672	–	–	2
3	0.2271	0.2294	0.2317	0.0045	0.2387	–	–	3
4	0.2023	0.2043	0.2063	0.0045	0.2133	–	0.2168	4
5	0.1801	0.1819	0.1837	0.0045	0.1907	–	0.1942	5
6	0.1604	0.1620	0.1636	0.0045	0.1706	–	0.1741	6
7	0.1429	0.1443	0.1457	0.0045	0.1527	–	0.1561	7
8	0.1272	0.1285	0.1298	0.0045	0.1368	–	0.1402	8
9	0.1133	0.1144	0.1155	0.0045	0.1225	–	0.1259	9
10	0.1009	0.1019	0.1029	0.0040	0.1089	–	0.1121	10
11	0.0898	0.0907	0.0916	0.0040	0.0976	–	0.1008	11
12	0.0800	0.0808	0.0816	0.0040	0.0876	–	0.0907	12
13	0.0713	0.0720	0.0727	0.0040	0.0787	–	0.0817	13
14	0.0635	0.0641	0.0647	0.0040	0.0707	0.0726	0.0742	14
15	0.0565	0.0571	0.0577	0.0040	0.0637	0.0654	0.0669	15
16	0.0503	0.0508	0.0513	0.0040	0.0573	0.0591	0.0605	16
17	0.0448	0.0453	0.0458	0.0040	0.0518	0.0535	0.0548	17
18	0.0399	0.0403	0.0407	0.0040	0.0467	0.0484	0.0497	18
19	0.0355	0.0359	0.0363	0.0040	0.0423	0.0439	0.0451	19
20	0.0317	0.0320	0.0323	0.0040	0.0383	0.0399	0.0411	20
21	0.0282	0.0285	0.0288	0.0040	0.0348	0.0363	0.0374	21
22	0.0250	0.0253	0.0256	0.0040	0.0316	0.0330	0.0341	22
23	0.0224	0.0226	0.0228	0.0040	0.0288	0.0303	0.0313	23
24	0.0199	0.0201	0.0203	0.0025	0.0243	0.0257	0.0267	24
25	0.0177	0.0179	0.0181	0.0025	0.0221	0.0234	0.0243	25
26	0.0157	0.0159	0.0161	0.0025	0.0201	0.0213	0.0222	26
27	0.0141	0.0142	0.0143	0.0025	0.0183	0.0196	0.0204	27
28	0.0125	0.0126	0.0127	0.0025	0.0167	0.0180	0.0187	28
29	0.0112	0.0113	0.0114	0.0025	0.0154	0.0166	0.0173	29
30	0.0099	0.0100	0.0101	0.0025	0.0141	0.0152	0.0159	30

© Copyright 2005 by the National Electrical Manufacturers Association.

Copyright National Electrical Manufacturers Association
Provided by IHS under license with NEMA
No reproduction or networking permitted without license from IHS
Not for Resale

Table 1-4 (mm)
DIMENSIONS FOR SINGLE GLASS FIBER COVERED ROUND BARE, SINGLE FILM COATED AND HEAVY FILM COATED WIRE

AWG	Bare Wire Diameter			Minimum Increase Single glass fiber	Maximum Overall Diameter, Single glass fiber covered			AWG
Size	Minimum	Nominal	Maximum	covering	Bare	Single Film	Heavy Film	Size
4/0	11.567	11.684	11.801	0.114	11.979	–	–	4/0
3/0	10.300	10.404	10.508	0.114	10.686	–	–	3/0
2/0	9.174	9.266	9.357	0.114	9.535	–	–	2/0
1/0	8.171	8.252	8.334	0.114	8.512	–	–	1/0
1	7.275	7.348	7.422	0.114	7.600	–	–	1
2	6.477	6.543	6.609	0.114	6.787	–	–	2
3	5.768	5.827	5.885	0.114	6.063	–	–	3
4	5.138	5.189	5.240	0.114	5.418	–	5.507	4
5	4.575	4.620	4.666	0.114	4.844	–	4.933	5
6	4.074	4.115	4.155	0.114	4.333	–	4.422	6
7	3.630	3.665	3.701	0.114	3.879	–	3.965	7
8	3.231	3.264	3.297	0.114	3.475	–	3.561	8
9	2.878	2.906	2.934	0.114	3.112	–	3.198	9
10	2.563	2.588	2.614	0.102	2.766	–	2.847	10
11	2.281	2.304	2.327	0.102	2.479	–	2.560	11
12	2.032	2.052	2.073	0.102	2.225	–	2.304	12
13	1.811	1.829	1.847	0.102	1.999	–	2.075	13
14	1.613	1.628	1.643	0.102	1.796	1.844	1.885	14
15	1.435	1.450	1.466	0.102	1.618	1.661	1.699	15
16	1.278	1.290	1.303	0.102	1.455	1.501	1.537	16
17	1.138	1.151	1.163	0.102	1.316	1.359	1.392	17
18	1.013	1.024	1.034	0.102	1.186	1.229	1.262	18
19	0.902	0.912	0.922	0.102	1.074	1.115	1.146	19
20	0.805	0.813	0.820	0.102	0.973	1.013	1.044	20
21	0.716	0.724	0.731	0.102	0.884	0.922	0.950	21
22	0.635	0.643	0.650	0.102	0.803	0.838	0.866	22
23	0.569	0.574	0.579	0.102	0.732	0.770	0.795	23
24	0.505	0.511	0.516	0.064	0.617	0.653	0.678	24
25	0.450	0.455	0.460	0.064	0.561	0.594	0.617	25
26	0.399	0.404	0.409	0.064	0.511	0.541	0.564	26
27	0.358	0.361	0.363	0.064	0.465	0.498	0.518	27
28	0.318	0.320	0.323	0.064	0.424	0.457	0.475	28
29	0.284	0.287	0.290	0.064	0.391	0.422	0.439	29
30	0.251	0.254	0.257	0.064	0.358	0.386	0.404	30

© Copyright 2005 by the National Electrical Manufacturers Association.

Copyright National Electrical Manufacturers Association
Provided by IHS under license with NEMA
No reproduction or networking permitted without license from IHS
Not for Resale

Table 1-5 (Inch)
DIMENSIONS FOR DOUBLE GLASS FIBER COVERED ROUND BARE, SINGLE FILM COATED AND HEAVY FILM COATED WIRE

AWG	Bare Wire Diameter			Minimum Increase Double Glass Fiber	Maximum Overall Diameter, Double Glass Fiber Covered			AWG
Size	Minimum	Nominal	Maximum	Covering	Bare	Single Film	Heavy Film	Size
4/0	0.4554	0.4600	0.4646	0.0070	0.4756	–	–	4/0
3/0	0.4055	0.4096	0.4137	0.0070	0.4247	–	–	3/0
2/0	0.3612	0.3648	0.3684	0.0070	0.3794	–	–	2/0
1/0	0.3170	0.3249	0.3281	0.0070	0.3391	–	–	1/0
1	0.2864	0.2893	0.2922	0.0070	0.3032	–	–	1
2	0.2550	0.2576	0.2602	0.0070	0.2712	–	–	2
3	0.2271	0.2294	0.2317	0.0070	0.2427	–	–	3
4	0.2023	0.2043	0.2063	0.0070	0.2173	–	0.2210	4
5	0.1801	0.1819	0.1837	0.0070	0.1947	–	0.1982	5
6	0.1604	0.1620	0.1636	0.0070	0.1746	–	0.1781	6
7	0.1429	0.1443	0.1457	0.0070	0.1567	–	0.1601	7
8	0.1272	0.1285	0.1298	0.0070	0.1408	–	0.1442	8
9	0.1133	0.1144	0.1155	0.0070	0.1265	–	0.1299	9
10	0.1009	0.1019	0.1029	0.0060	0.1119	–	0.1151	10
11	0.0898	0.0907	0.0916	0.0060	0.1006	–	0.1038	11
12	0.0800	0.0808	0.0816	0.0060	0.0906	–	0.0937	12
13	0.0713	0.0720	0.0727	0.0060	0.0817	–	0.0847	13
14	0.0635	0.0641	0.0647	0.0060	0.0737	0.0726	0.0772	14
15	0.0565	0.0571	0.0577	0.0060	0.0667	0.0654	0.0699	15
16	0.0503	0.0508	0.0513	0.0060	0.0603	0.0621	0.0635	16
17	0.0448	0.0453	0.0458	0.0060	0.0548	0.0565	0.0578	17
18	0.0399	0.0403	0.0407	0.0060	0.0497	0.0514	0.0527	18
19	0.0355	0.0359	0.0363	0.0060	0.0435	0.0469	0.0481	19
20	0.0317	0.0320	0.0323	0.0060	0.0413	0.0429	0.0441	20
21	0.0282	0.0285	0.0288	0.0060	0.0378	0.0393	0.0404	21
22	0.0250	0.0253	0.0256	0.0060	0.0346	0.0360	0.0371	22
23	0.0224	0.0226	0.0228	0.0060	0.0318	0.0333	0.0343	23
24	0.0199	0.0201	0.0203	0.0045	0.0263	0.0277	0.0287	24
25	0.0177	0.0179	0.0181	0.0045	0.0241	0.0254	0.0263	25
26	0.0157	0.0159	0.0161	0.0045	0.0221	0.0233	0.0242	26
27	0.0141	0.0142	0.0143	0.0045	0.0203	0.0216	0.0224	27
28	0.0125	0.0126	0.0127	0.0045	0.0187	0.0200	0.0207	28
29	0.0112	0.0113	0.0114	0.0045	0.0174	0.0186	0.0193	29
30	0.0099	0.0100	0.0101	0.0045	0.0161	0.0172	0.0179	30

© Copyright 2005 by the National Electrical Manufacturers Association.

Copyright National Electrical Manufacturers Association
Provided by IHS under license with NEMA
No reproduction or networking permitted without license from IHS
Not for Resale

Table 1-5 (mm)
DIMENSIONS FOR DOUBLE GLASS FIBER COVERED ROUND BARE, SINGLE FILM COATED AND HEAVY FILM COATED WIRE

AWG	Bare Wire Diameter			Minimum Increase Double Glass Fiber	Maximum Overall Diameter, Double Glass Fiber Covered			AWG
Size	Minimum	Nominal	Maximum	Covering	Bare	Single Film	Heavy Film	Size
4/0	11.567	11.684	11.801	0.178	12.080	–	–	4/0
3/0	10.300	10.404	10.508	0.178	10.787	–	–	3/0
2/0	9.174	9.266	9.357	0.178	9.637	–	–	2/0
1/0	8.171	8.252	8.334	0.178	8.613	–	–	1/0
1	7.275	7.348	7.422	0.178	7.701	–	–	1
2	6.477	6.543	6.609	0.178	6.888	–	–	2
3	5.768	5.827	5.885	0.178	6.165	–	–	3
4	5.138	5.189	5.240	0.178	5.520	–	5.613	4
5	4.575	4.620	4.666	0.178	4.945	–	5.034	5
6	4.074	4.115	4.155	0.178	4.435	–	4.524	6
7	3.630	3.665	3.701	0.178	3.980	–	4.067	7
8	3.231	3.264	3.297	0.178	3.576	–	3.663	8
9	2.878	2.906	2.934	0.178	3.213	–	3.299	9
10	2.563	2.588	2.614	0.152	2.842	–	2.924	10
11	2.281	2.304	2.327	0.152	2.555	–	2.637	11
12	2.032	2.052	2.073	0.152	2.301	–	2.380	12
13	1.811	1.829	1.847	0.152	2.075	–	2.151	13
14	1.613	1.628	1.643	0.152	1.872	1.844	1.961	14
15	1.435	1.450	1.466	0.152	1.694	1.661	1.775	15
16	1.278	1.290	1.303	0.152	1.532	1.577	1.613	16
17	1.138	1.151	1.163	0.152	1.392	1.465	1.468	17
18	1.013	1.024	1.034	0.152	1.262	1.306	1.339	18
19	0.902	0.912	0.922	0.152	1.151	1.191	1.222	19
20	0.805	0.813	0.820	0.152	1.049	1.090	1.120	20
21	0.716	0.724	0.731	0.152	0.960	0.998	1.026	21
22	0.635	0.643	0.650	0.152	0.879	0.914	0.942	22
23	0.569	0.574	0.579	0.152	0.808	0.846	0.871	23
24	0.505	0.511	0.516	0.114	0.668	0.704	0.729	24
25	0.450	0.455	0.460	0.114	0.612	0.645	0.668	25
26	0.399	0.404	0.409	0.114	0.561	0.592	0.615	26
27	0.358	0.361	0.363	0.114	0.516	0.549	0.569	27
28	0.318	0.320	0.323	0.114	0.475	0.508	0.526	28
29	0.284	0.287	0.290	0.114	0.442	0.472	0.490	29
30	0.251	0.254	0.257	0.114	0.409	0.437	0.455	30

© Copyright 2005 by the National Electrical Manufacturers Association.

Copyright National Electrical Manufacturers Association
Provided by IHS under license with NEMA
No reproduction or networking permitted without license from IHS
Not for Resale

Table 1-6 (Inch)
DIMENSIONS FOR SINGLE POLYESTER GLASS FIBER COVERED ROUND BARE, SINGLE FILM COATED AND HEAVY FILM COATED WIRE

AWG Size	Bare Wire Diameter			Minimum Increase, Single Polyester Glass Fiber Covering	Maximum Overall Diameter, Single Polyester Glass Fiber Covered			AWG Size
	Minimum	Nominal	Maximum		Bare	Single Film	Heavy Film	
4/0	0.4554	0.4600	0.4646	0.0040	0.4696	–	–	4/0
3/0	0.4055	0.4096	0.4137	0.0040	0.4187	–	–	3/0
2/0	0.3612	0.3648	0.3684	0.0040	0.3734	–	–	2/0
1/0	0.3170	0.3249	0.3281	0.0040	0.3331	–	–	1/0
1	0.2864	0.2893	0.2922	0.0040	0.2972	–	–	1
2	0.2550	0.2576	0.2602	0.0040	0.2652	–	–	2
3	0.2271	0.2294	0.2317	0.0040	0.2367	–	–	3
4	0.2023	0.2043	0.2063	0.0040	0.2123	–	0.2158	4
5	0.1801	0.1819	0.1837	0.0040	0.1897	–	0.1932	5
6	0.1604	0.1620	0.1636	0.0040	0.1696	–	0.1731	6
7	0.1429	0.1443	0.1457	0.0040	0.1517	–	0.1551	7
8	0.1272	0.1285	0.1298	0.0040	0.1358	–	0.1392	8
9	0.1133	0.1144	0.1155	0.0040	0.1215	–	0.1249	9
10	0.1009	0.1019	0.1029	0.0035	0.1079	–	0.1111	10
11	0.0898	0.0907	0.0916	0.0035	0.0966	–	0.0998	11
12	0.0800	0.0808	0.0816	0.0035	0.0866	–	0.0897	12
13	0.0713	0.0720	0.0727	0.0035	0.0777	–	0.0807	13
14	0.0635	0.0641	0.0647	0.0035	0.0697	0.0716	0.0732	14
15	0.0565	0.0571	0.0577	0.0035	0.0627	0.0644	0.0569	15
16	0.0503	0.0508	0.0513	0.0035	0.0563	0.0581	0.0595	16
17	0.0448	0.0453	0.0458	0.0035	0.0508	0.0525	0.0538	17
18	0.0399	0.0403	0.0407	0.0035	0.0457	0.0474	0.0487	18
19	0.0355	0.0359	0.0363	0.0035	0.0413	0.0429	0.0441	19
20	0.0317	0.0320	0.0323	0.0035	0.0373	0.0389	0.0401	20
21	0.0282	0.0285	0.0288	0.0035	0.0338	0.0353	0.0364	21
22	0.0250	0.0253	0.0256	0.0035	0.0306	0.0320	0.0331	22
23	0.0224	0.0226	0.0228	0.0035	0.0278	0.0293	0.0303	23
24	0.0199	0.0201	0.0203	0.0025	0.0253	0.0267	0.0277	24
25	0.0177	0.0179	0.0181	0.0025	0.0231	0.0244	0.0253	25
26	0.0157	0.0159	0.0161	0.0025	0.0211	0.0223	0.0232	26
27	0.0141	0.0142	0.0143	0.0025	0.0193	0.0206	0.0214	27
28	0.0125	0.0126	0.0127	0.0025	0.0177	0.0190	0.0197	28
29	0.0112	0.0113	0.0114	0.0025	0.0164	0.0176	0.0183	29
30	0.0099	0.0100	0.0101	0.0025	0.0151	0.0162	0.0169	30

© Copyright 2005 by the National Electrical Manufacturers Association.

Copyright National Electrical Manufacturers Association
Provided by IHS under license with NEMA
No reproduction or networking permitted without license from IHS
Not for Resale

Table 1-6 (mm)
DIMENSIONS FOR SINGLE POLYESTER GLASS FIBER COVERED ROUND BARE, SINGLE FILM COATED AND HEAVY FILM COATED WIRE

AWG Size	Bare Wire Diameter			Minimum Increase, Single Polyester Glass Fiber Covering	Maximum Overall Diameter, Single Polyester Glass Fiber Covered			AWG Size
	Minimum	Nominal	Maximum		Bare	Single Film	Heavy Film	
4/0	11.567	11.684	11.801	0.102	11.928	–	–	4/0
3/0	10.300	10.404	10.508	0.102	10.635	–	–	3/0
2/0	9.174	9.266	9.357	0.102	9.484	–	–	2/0
1/0	8.171	8.252	8.334	0.102	8.461	–	–	1/0
1	7.275	7.348	7.422	0.102	7.549	–	–	1
2	6.477	6.543	6.609	0.102	6.736	–	–	2
3	5.768	5.827	5.885	0.102	6.012	–	–	3
4	5.138	5.189	5.240	0.102	5.392	–	5.481	4
5	4.575	4.620	4.666	0.102	4.818	–	4.907	5
6	4.074	4.115	4.155	0.102	4.308	–	4.397	6
7	3.630	3.665	3.701	0.102	3.853	–	3.940	7
8	3.231	3.264	3.297	0.102	3.449	–	3.536	8
9	2.878	2.906	2.934	0.102	3.086	–	3.172	9
10	2.563	2.588	2.614	0.089	2.741	–	2.822	10
11	2.281	2.304	2.327	0.089	2.454	–	2.535	11
12	2.032	2.052	2.073	0.089	2.200	–	2.278	12
13	1.811	1.829	1.847	0.089	1.974	–	2.050	13
14	1.613	1.628	1.643	0.089	1.770	1.819	1.859	14
15	1.435	1.450	1.466	0.089	1.593	1.639	1.674	15
16	1.278	1.290	1.303	0.089	1.430	1.476	1.511	16
17	1.138	1.151	1.163	0.089	1.290	1.334	1.367	17
18	1.013	1.024	1.034	0.089	1.161	1.204	1.237	18
19	0.902	0.912	0.922	0.089	1.049	1.090	1.120	19
20	0.805	0.813	0.820	0.089	0.947	0.988	1.019	20
21	0.716	0.724	0.731	0.089	0.859	0.897	0.925	21
22	0.635	0.643	0.650	0.089	0.777	0.813	0.841	22
23	0.569	0.574	0.579	0.089	0.706	0.744	0.770	23
24	0.505	0.511	0.516	0.064	0.643	0.678	0.704	24
25	0.450	0.455	0.460	0.064	0.587	0.620	0.643	25
26	0.399	0.404	0.409	0.064	0.536	0.566	0.589	26
27	0.358	0.361	0.363	0.064	0.490	0.523	0.544	27
28	0.318	0.320	0.323	0.064	0.450	0.483	0.500	28
29	0.284	0.287	0.290	0.064	0.417	0.447	0.465	29
30	0.251	0.254	0.257	0.064	0.384	0.411	0.429	30

© Copyright 2005 by the National Electrical Manufacturers Association.

Copyright National Electrical Manufacturers Association
Provided by IHS under license with NEMA
No reproduction or networking permitted without license from IHS
Not for Resale

Table 1-7 (Inch)
DIMENSIONS FOR DOUBLE POLYESTER GLASS FIBER COVERED ROUND BARE, SINGLE FILM COATED AND HEAVY FILM COATED WIRE

AWG Size	Bare Wire Diameter			Minimum Increase, Double Polyester Glass fiber covering	Maximum Overall Diameter, Double Polyester Glass Fiber Covered			AWG Size
	Minimum	Nominal	Maximum		Bare	Single Film	Heavy Film	
4/0	0.4554	0.4600	0.4646	0.0060	0.4736	–	–	4/0
3/0	0.4055	0.4096	0.4137	0.0060	0.4227	–	–	3/0
2/0	0.3612	0.3648	0.3684	0.0060	0.3774	–	–	2/0
1/0	0.3170	0.3249	0.3281	0.0060	0.3371	–	–	1/0
1	0.2864	0.2893	0.2922	0.0060	0.3012	–	–	1
2	0.2550	0.2576	0.2602	0.0060	0.2692	–	–	2
3	0.2271	0.2294	0.2317	0.0060	0.2407	–	–	3
4	0.2023	0.2043	0.2063	0.0060	0.2153	–	0.2188	4
5	0.1801	0.1819	0.1837	0.0060	0.1927	–	0.1962	5
6	0.1604	0.1620	0.1636	0.0060	0.1726	–	0.1761	6
7	0.1429	0.1443	0.1457	0.0060	0.1547	–	0.1581	7
8	0.1272	0.1285	0.1298	0.0060	0.1388	–	0.1422	8
9	0.1133	0.1144	0.1155	0.0060	0.1245	–	0.1279	9
10	0.1009	0.1019	0.1029	0.0055	0.1109	–	0.1141	10
11	0.0898	0.0907	0.0916	0.0055	0.0996	–	0.1028	11
12	0.0800	0.0808	0.0816	0.0055	0.0986	–	0.0927	12
13	0.0713	0.0720	0.0727	0.0055	0.0807	–	0.0837	13
14	0.0635	0.0641	0.0647	0.0055	0.0727	0.0746	0.0762	14
15	0.0565	0.0571	0.0577	0.0055	0.0657	0.0674	0.0689	15
16	0.0503	0.0508	0.0513	0.0055	0.0593	0.0611	0.0625	16
17	0.0448	0.0453	0.0458	0.0055	0.0538	0.0555	0.0568	17
18	0.0399	0.0403	0.0407	0.0055	0.0487	0.0504	0.0517	18
19	0.0355	0.0359	0.0363	0.0055	0.0443	0.0459	0.0471	19
20	0.0317	0.0320	0.0323	0.0055	0.0403	0.0419	0.0431	20
21	0.0282	0.0285	0.0288	0.0055	0.0368	0.0383	0.0394	21
22	0.0250	0.0253	0.0256	0.0055	0.0336	0.0350	0.0361	22
23	0.0224	0.0226	0.0228	0.0055	0.0308	0.0323	0.0333	23
24	0.0199	0.0201	0.0203	0.0045	0.0268	0.0282	0.0292	24
25	0.0177	0.0179	0.0181	0.0045	0.0246	0.0259	0.0268	25
26	0.0157	0.0159	0.0161	0.0045	0.0226	0.0238	0.0247	26
27	0.0141	0.0142	0.0143	0.0045	0.0208	0.0221	0.0229	27
28	0.0125	0.0126	0.0127	0.0045	0.0192	0.0205	0.0212	28
29	0.0112	0.0113	0.0114	0.0045	0.0179	0.0191	0.0198	29
30	0.0099	0.0100	0.0101	0.0045	0.0166	0.0177	0.0184	30

© Copyright 2005 by the National Electrical Manufacturers Association.

Copyright National Electrical Manufacturers Association
Provided by IHS under license with NEMA
No reproduction or networking permitted without license from IHS
Not for Resale

Table 1-7 (mm)
DIMENSIONS FOR DOUBLE POLYESTER GLASS FIBER COVERED ROUND BARE SINGLE FILM COATED AND HEAVY FILM COATED WIRE

AWG Size	Bare Wire Diameter			Minimum Increase, Double Polyester Glass Fiber Covering	Maximum Overall Diameter, Double Polyester Glass Fiber Covered			AWG Size
	Minimum	Nominal	Maximum		Bare	Single Film	Heavy Film	
4/0	11.567	11.684	11.801	0.152	12.029	–	–	4/0
3/0	10.300	10.404	10.508	0.152	10.737	–	–	3/0
2/0	9.174	9.266	9.357	0.152	9.586	–	–	2/0
1/0	8.171	8.252	8.334	0.152	8.562	–	–	1/0
1	7.275	7.348	7.422	0.152	7.650	–	–	1
2	6.477	6.543	6.609	0.152	6.838	–	–	2
3	5.768	5.827	5.885	0.152	6.114	–	–	3
4	5.138	5.189	5.240	0.152	5.469	–	5.558	4
5	4.575	4.620	4.666	0.152	4.895	–	4.983	5
6	4.074	4.115	4.155	0.152	4.384	–	4.473	6
7	3.630	3.665	3.701	0.152	3.929	–	4.016	7
8	3.231	3.264	3.297	0.152	3.526	–	3.612	8
9	2.878	2.906	2.934	0.152	3.162	–	3.249	9
10	2.563	2.588	2.614	0.140	2.817	–	2.898	10
11	2.281	2.304	2.327	0.140	2.530	–	2.611	11
12	2.032	2.052	2.073	0.140	2.276	–	2.355	12
13	1.811	1.829	1.847	0.140	2.050	–	2.126	13
14	1.613	1.628	1.643	0.140	1.847	1.895	1.935	14
15	1.435	1.450	1.466	0.140	1.669	1.712	1.750	15
16	1.278	1.290	1.303	0.140	1.506	1.552	1.558	16
17	1.138	1.151	1.163	0.140	1.367	1.410	1.443	17
18	1.013	1.024	1.034	0.140	1.237	1.280	1.313	18
19	0.902	0.912	0.922	0.140	1.125	1.166	1.196	19
20	0.805	0.813	0.820	0.140	1.024	1.064	1.095	20
21	0.716	0.724	0.731	0.140	0.935	0.973	1.001	21
22	0.635	0.643	0.650	0.140	0.853	0.889	0.917	22
23	0.569	0.574	0.579	0.140	0.782	0.820	0.846	23
24	0.505	0.511	0.516	0.114	0.681	0.716	0.742	24
25	0.450	0.455	0.460	0.114	0.625	0.658	0.681	25
26	0.399	0.404	0.409	0.114	0.574	0.605	0.627	26
27	0.358	0.361	0.363	0.114	0.528	0.561	0.582	27
28	0.318	0.320	0.323	0.114	0.488	0.521	0.538	28
29	0.284	0.287	0.290	0.114	0.455	0.485	0.503	29
30	0.251	0.254	0.257	0.114	0.422	0.450	0.467	30

--`,,```,,,,````-`-`,,`,,`,`,,`--- © Copyright 2005 by the National Electrical Manufacturers Association.

Copyright National Electrical Manufacturers Association
Provided by IHS under license with NEMA
No reproduction or networking permitted without license from IHS
Not for Resale

Table 1-8
DIMENSIONS AND RADII FOR RECTANGULAR BARE WIRE*

Dimensions in inches

Nominal Thickness	Nominal Width	Radii ± 25%	Nominal Width	Radii ± 25%
0.025 - 0.063	All	FRE		
0.064 - 0.088	0.065 - 0.187	0.020	0.188-0.750	0.031**
0.089 - 0.124	0.090 - 0.187	0.026	0.188-0.750	0.031**
0.125 - 0.157	All	0.031		
0.158 - 0.280	All	0.039		

Dimensions in mm

Nominal Thickness	Nominal Width	Radii ± 25%	Nominal Width	Radii ± 25%
0.64 – 1.60	All	FRE		
1.63 – 2.24	1.65 - 4.75	0.50	4.78 – 19.05	0.80**
2.26 – 3.15	2.29 – 4.75	0.67	4.78 – 19.05	0.80**
3.18 – 3.99	All	0.80		
4.01 – 7.11	All	1.00		

NOTE 1–FRE - Fully Rounded Edges (Radius = half the thickness of the wire)

NOTE 2–The ratio of the width dimension to the thickness dimension shall not exceed 10.

* This table is similar to ASTM B 48.

** Rectangular wire with a thickness in the .064-.124 inch (1.63- 3.15 mm) range and a width in the 0.188-0.750 inch (4.78-19.05 mm) range may be manufactured with the corner radii specified for widths less than 0.188 (4.78 mm).

Table 1-9
BARE RECTANGULAR CONDUCTOR TOLERANCES

Thickness Tolerances

Nominal Thickness		Permissible Variations in Thickness		
Range Inches	Range mm	Inches	mm	Percent
0.025 - 0.098	0.64 - 2.49	± 0.001	± 0.03	
>0.098 - 0.280	>2.49 - 7.11	⇒	⇒	±1 percent

Width Tolerances

Nominal Width		Permissible Variations in Width		
Range Inches	Range mm	Inches	mm	Percent
0.063 - 0.098	1.60 - 2.49	± 0.001	± 0.03	
>0.098 - 0.315	>2.49 - 8.00	⇒	⇒	±1 percent
>0.315 - .492	>8.00 - 12.5	± 0.003	± 0.08	
>0.492 inch	>12.5	⇒	⇒	±1 percent

Table 1-10
FILM INSULATED RECTANGULAR MAGNET WIRE
INCREASE IN THICKNESS AND WIDTH DUE TO FILM COATING

	Increase in Width				Increase in Thickness			
	Minimum		Maximum*		Minimum		Maximum*	
Build	inches	mm	inches	mm	inches	mm	inches	mm
Heavy	0.0025	0.064	0.0045	0.114	0.0030	0.076	0.0050	0.127
Quadruple	0.0040	0.102	0.0060	0.152	0.0050	0.127	0.0070	0.178

*The maximum increase shall be permitted to be exceeded provided the maximum overall dimension of the coated wire does not exceed the sum of the maximum dimensions of the bare wire plus the maximum increase due to the coating.

© Copyright 2005 by the National Electrical Manufacturers Association.

Copyright National Electrical Manufacturers Association
Provided by IHS under license with NEMA
No reproduction or networking permitted without license from IHS
Not for Resale

Table 1-11
DIMENSIONS OF SQUARE BARE WIRE

Dimensions in inches

AWG	Minimum	Nominal	Maximum	Nominal Corner Radius ± 25%
1/0	0.3219	0.3249	0.3281	0.039
1	0.2864	0.2893	0.2922	0.039
2	0.2550	0.2576	0.2602	0.039
3	0.2271	0.2294	0.2317	0.039
4	0.2023	0.2043	0.2063	0.039
5	0.1801	0.1819	0.1837	0.039
6	0.1604	0.1620	0.1636	0.031
7	0.1429	0.1443	0.1457	0.031
8	0.1272	0.1285	0.1298	0.031
9	0.1133	0.1144	0.1155	0.026
10	0.1009	0.1019	0.1029	0.026
11	0.0897	0.0907	0.0917	0.020
12	0.0798	0.0808	0.0818	0.020
13	0.0710	0.0720	0.0730	0.016
14	0.0631	0.0641	0.0651	0.016

Dimensions in mm

AWG	Minimum	Nominal	Maximum	Nominal Corner Radius ± 25%
1/0	8.176	8.252	8.334	1.00
1	7.275	7.348	7.422	1.00
2	6.477	6.543	6.609	1.00
3	5.768	5.827	5.885	1.00
4	5.138	5.189	5.240	1.00
5	4.575	4.620	4.666	1.00
6	4.074	4.115	4.155	0.80
7	3.630	3.665	3.701	0.80
8	3.231	3.264	3.297	0.80
9	2.878	2.906	2.934	0.67
10	2.563	2.588	2.614	0.67
11	2.278	2.304	2.329	0.50
12	2.027	2.052	2.078	0.50
13	1.803	1.829	1.854	0.40
14	1.603	1.628	1.654	0.40

© Copyright 2005 by the National Electrical Manufacturers Association.

Copyright National Electrical Manufacturers Association
Provided by IHS under license with NEMA
No reproduction or networking permitted without license from IHS
Not for Resale

Table 1-12
HEAVY AND QUADRUPLE FILM INSULATED SQUARE MAGNET WIRE
INCREASE IN DIMENSIONS DUE TO FILM COATING

Dimensions in inches

Square AWG Size	Bare Wire Dimensions			Radii (± 25%)	Heavy		Quadruple	
					Minimum	Maximum	Minimum	Maximum
	Minimum	Nominal	Maximum	Nominal	Increase	Overall	Increase	Overall
1	0.2864	0.2893	0.2922	0.039	0.0030	0.2972	0.0050	0.2992
2	0.2550	0.2576	0.2602	0.039	0.0030	0.2652	0.0050	0.2672
3	0.2271	0.2294	0.2317	0.039	0.0030	0.2367	0.0050	0.2387
4	0.2023	0.2043	0.2063	0.039	0.0030	0.2113	0.0050	0.2133
5	0.1801	0.1819	0.1837	0.039	0.0030	0.1887	0.0050	0.1907
6	0.1604	0.1620	0.1636	0.031	0.0030	0.1686	0.0050	0.1706
7	0.1429	0.1443	0.1457	0.031	0.0030	0.1507	0.0050	0.1527
8	0.1272	0.1285	0.1298	0.031	0.0030	0.1348	0.0050	0.1368
9	0.1133	0.1144	0.1155	0.026	0.0030	0.1205	0.0050	0.1225
10	0.1009	0.1019	0.1029	0.026	0.0030	0.1079	0.0050	0.1099
11	0.0897	0.0907	0.0917	0.020	0.0030	0.0967	0.0050	0.0987
12	0.0798	0.0808	0.0818	0.020	0.0030	0.0868	0.0050	0.0888
13	0.0710	0.0720	0.0730	0.016	0.0030	0.0780	0.0050	0.0800
14	0.0631	0.0641	0.0651	0.016	0.0030	0.0701	0.0050	0.0721

Dimensions in mm

Square AWG Size	Bare Wire Dimensions			Radii (± 25%)	Heavy		Quadruple	
					Minimum	Maximum	Minimum	Maximum
	Minimum	Nominal	Maximum	Nominal	Increase	Overall	Increase	Overall
1	7.275	7.348	7.422	1.00	0.080	7.549	0.127	7.600
2	6.477	6.543	6.609	1.00	0.080	6.736	0.127	6.787
3	5.768	5.827	5.885	1.00	0.080	6.012	0.127	6.063
4	5.138	5.189	5.240	1.00	0.080	5.367	0.127	5.418
5	4.575	4.620	4.666	1.00	0.080	4.793	0.127	4.844
6	4.074	4.115	4.155	0.80	0.080	4.282	0.127	4.333
7	3.630	3.665	3.701	0.80	0.080	3.828	0.127	3.879
8	3.231	3.264	3.297	0.80	0.080	3.424	0.127	3.475
9	2.878	2.906	2.934	0.67	0.080	3.061	0.127	3.112
10	2.563	2.588	2.614	0.67	0.080	2.741	0.127	2.791
11	2.278	2.304	2.329	0.50	0.080	2.456	0.127	2.507
12	2.027	2.052	2.078	0.50	0.080	2.205	0.127	2.256
13	1.803	1.829	1.854	0.40	0.080	1.981	0.127	2.032
14	1.603	1.628	1.654	0.40	0.080	1.781	0.127	1.831

© Copyright 2005 by the National Electrical Manufacturers Association.

Copyright National Electrical Manufacturers Association
Provided by IHS under license with NEMA
No reproduction or networking permitted without license from IHS
Not for Resale

Table 1-13
RANGE OF INCREASE IN DIMENSIONS, INCHES
SINGLE GLASS FIBER COVERED HEAVY FILM INSULATED RECTANGULAR COPPER WIRE

(Applies to MW 42-C Single, MW 43-C Single, and MW 52-C Single)

The increases in the table below apply to the total insulation (film coating plus glass fiber)

Nominal Thickness		Nominal Width																														Nominal Thickness	
mm		2.05	2.18	2.30	2.44	2.59	2.74	2.91	3.08	3.26	3.46	3.66	3.88	4.12	4.36	4.62	4.90	5.19	5.50	5.83	6.18	6.54	6.93	7.35	7.79	8.25	8.74	9.27	9.82	10.40	11.03	11.68	12.38	13.12	mm	
	Inches	0.081	0.086	0.091	0.096	0.102	0.108	0.114	0.121	0.128	0.136	0.144	0.153	0.162	0.172	0.182	0.193	0.204	0.217	0.229	0.243	0.258	0.273	0.289	0.307	0.325	0.344	0.365	0.387	0.410	0.434	0.460	0.487	0.517	Inches	
1.02	0.040	0.008-0.012					0.009-0.013										0.010-0.014				0.011-0.015							0.011-0.016							0.040	1.02
1.15	0.045																																		0.045	1.15
1.29	0.051																																		0.051	1.29
1.45	0.057																																		0.057	1.45
1.63	0.064																																		0.064	1.63
1.83	0.072																																		0.072	1.83
2.05	0.081																																		0.081	2.05
2.30	0.091																																		0.091	2.30
2.59	0.102																																		0.102	2.59
2.91	0.114																																		0.114	2.91
3.26	0.128																																		0.128	3.26
3.66	0.144																																		0.144	3.66
4.12	0.162																																		0.162	4.12
4.62	0.182																																		0.182	4.62
5.19	0.204																																		0.204	5.19
5.83	0.229																																		0.229	5.83
6.54	0.258																																		0.258	6.54

NOTE 1 The maximum increase in thickness or width due to the glass fiber covering and treating varnish shall be permitted to be exceeded, provided the overall thickness or width of the covered wire does not exceed the sum of the maximum thickness or width of the bare wire plus the maximum increase in dimension given in the table above.

NOTE 2 The increase due to the heavy film insulation shall be in accordance with the applicable section for film insulated wire in Part 2.

NOTE 3 The minimum increases in dimensions in the table above apply only to the increase in thickness.

NOTE 4 The equivalent mm increases in dimensions are shown below.

Inch	0.008	0.009	.010	0.011	0.012	0.013	0.014	0.015	0.016
mm	0.20	0.23	0.25	0.28	0.30	0.33	0.36	0.38	0.41

© Copyright 2005 by the National Electrical Manufacturers Association.

Copyright National Electrical Manufacturers Association
Provided by IHS under license with NEMA
No reproduction or networking permitted without license from IHS
Not for Resale

Table 1-14
RANGE OF INCREASE IN DIMENSIONS, INCHES
DOUBLE GLASS FIBER COVERED BARE RECTANGULAR COPPER WIRE

(Applies to MW 42-C Double, MW 43-C Double, and MW 52-C Double)

Nominal Thickness		Nominal Width																														Nominal Thickness	
mm		2.05	2.18	2.30	2.44	2.59	2.74	2.91	3.08	3.26	3.46	3.66	3.88	4.12	4.36	4.62	4.90	5.19	5.50	5.83	6.18	6.54	6.93	7.35	7.79	8.25	8.74	9.27	9.82	10.40	11.03	11.68	12.38	13.12	mm	
	Inches	0.081	0.086	0.091	0.096	0.102	0.108	0.114	0.121	0.128	0.136	0.144	0.153	0.162	0.172	0.182	0.193	0.204	0.217	0.229	0.243	0.258	0.273	0.289	0.307	0.325	0.344	0.365	0.387	0.410	0.434	0.460	0.487	0.517	Inches	
1.02	0.040	0.008-0.012					0.009-0.013				0.010-0.014						0.011-0.015				0.011-0.016							0.013-0.018							0.040	1.02
1.15	0.045																																		0.045	1.15
1.29	0.051																																		0.051	1.29
1.45	0.057																																		0.057	1.45
1.63	0.064																																		0.064	1.63
1.83	0.072																																		0.072	1.83
2.05	0.081																																		0.081	2.05
2.30	0.091																																		0.091	2.30
2.59	0.102																																		0.102	2.59
2.91	0.114																															0.013-0.019			0.114	2.91
3.26	0.128																							0.012-0.017											0.128	3.26
3.66	0.144																																		0.144	3.66
4.12	0.162																																		0.162	4.12
4.62	0.182																																		0.182	4.62
5.19	0.204																																		0.204	5.19
5.83	0.229																																		0.229	5.83
6.54	0.258																																		0.258	6.54

NOTE 1 The maximum increase in thickness or width due to the glass fiber covering and treating varnish shall be permitted to be exceeded, provided the overall thickness or width of the covered wire does not exceed the sum of the maximum thickness or width of the bare wire plus the maximum increase in dimension given in the table above.

NOTE 2 The minimum increases in dimensions in the table above apply only to the increase In thickness.

NOTE 3 The equivalent mm increases in dimensions are shown below.

Inch	0.008	0.009	.010	0.011	0.012	0.013	0.014	0.015	0.016	0.017	0.018	0.019
mm	0.20	0.23	0.25	0.28	0.30	0.33	0.36	0.38	0.41	0.43	0.46	0.48

© Copyright 2005 by the National Electrical Manufacturers Association.

Copyright National Electrical Manufacturers Association
Provided by IHS under license with NEMA
No reproduction or networking permitted without license from IHS
Not for Resale

Table 1-15
RANGE OF INCREASE IN DIMENSIONS, INCHES
DOUBLE GLASS FIBER COVERED HEAVY FILM COATED RECTANGULAR COPPER WIRE

(Applies to MW 42-C Double, MW 43-C Double, and MW 52-C Double)

The increases in the table below apply to the total insulation (film coating plus glass fiber)

Nominal Thickness		Nominal Width																														Nominal Thickness	
mm		2.05	2.18	2.30	2.44	2.59	2.74	2.91	3.08	3.26	3.46	3.66	3.88	4.12	4.36	4.62	4.90	5.19	5.50	5.83	6.18	6.54	6.93	7.35	7.79	8.25	8.74	9.27	9.82	10.40	11.03	11.68	12.38	13.12	mm	
	Inches	0.081	0.086	0.091	0.096	0.102	0.108	0.114	0.121	0.128	0.136	0.144	0.153	0.162	0.172	0.182	0.193	0.204	0.217	0.229	0.243	0.258	0.273	0.289	0.307	0.325	0.344	0.365	0.387	0.410	0.434	0.460	0.487	0.517	Inches	
1.02	0.040	0.012-0.017					0.013-0.018				0.013-0.019						0.014-0.020				0.015-0.021						0.016-0.023								0.040	1.02
1.15	0.045																																		0.045	1.15
1.29	0.051																																		0.051	1.29
1.45	0.057																																		0.057	1.45
1.63	0.064																																		0.064	1.63
1.83	0.072																																		0.072	1.83
2.05	0.081																																		0.081	2.05
2.30	0.091																																		0.091	2.30
2.59	0.102																																		0.102	2.59
2.91	0.114																															0.017-0.024			0.114	2.91
3.26	0.128																							0.015-0.022											0.128	3.26
3.66	0.144																																		0.144	3.66
4.12	0.162																																		0.162	4.12
4.62	0.182																																		0.182	4.62
5.19	0.204																																		0.204	5.19
5.83	0.229																																		0.229	5.83
6.54	0.258																																		0.258	6.54

NOTE 1 The maximum increase in thickness or width due to the glass fiber covering and treating varnish shall be permitted to be exceeded, provided the overall thickness or width of the covered wire does not exceed the sum of the maximum thickness or width of the bare wire plus the maximum increase in dimension given in the table above.

NOTE 2 The increase due to the heavy film insulation shall be in accordance with the applicable section for film insulated wire in Part 2.

NOTE 3 The minimum increases in dimension in the table above apply only to the increase in thickness.

NOTE 4 The equivalent mm increases in dimensions are shown below.

Inch	0.012	0.013	0.014	0.015	0.016	0.017	0.018	0.019	0.020	0.021	0.022	0.023	0.024
mm	0.30	0.33	0.36	0.38	0.41	0.43	0.46	0.48	0.51	0.53	0.56	0.58	0.61

© Copyright 2005 by the National Electrical Manufacturers Association.

Copyright National Electrical Manufacturers Association
Provided by IHS under license with NEMA
No reproduction or networking permitted without license from IHS
Not for Resale

Table 1-16
RANGE OF INCREASE IN DIMENSIONS, INCHES
SINGLE POLYESTER GLASS FIBER COVERED HEAVY FILM INSULATED RECTANGULAR COPPER WIRE

(Applies to MW 46-C Single, MW 48-C Single, and MW 53-C Single)

The increases in the table below apply to the total insulation (film coating plus polyester glass fiber)

Nominal Thickness		Nominal Width																														Nominal Thickness	
mm		2.05	2.18	2.30	2.44	2.59	2.74	2.91	3.08	3.26	3.46	3.66	3.88	4.12	4.36	4.62	4.90	5.19	5.50	5.83	6.18	6.54	6.93	7.35	7.79	8.25	8.74	9.27	9.82	10.40	11.03	11.68	12.38	13.12	mm	
	Inches	0.081	0.086	0.091	0.096	0.102	0.108	0.114	0.121	0.128	0.136	0.144	0.153	0.162	0.172	0.182	0.193	0.204	0.217	0.229	0.243	0.258	0.273	0.289	0.307	0.325	0.344	0.365	0.387	0.410	0.434	0.460	0.487	0.517	Inches	
1.02	0.040	0.007-0.010							0.008-0.011								0.008-0.012								0.009-0.013										0.040	1.02
1.15	0.045																																		0.045	1.15
1.29	0.051																																		0.051	1.29
1.45	0.057																																		0.057	1.45
1.63	0.064																																		0.064	1.63
1.83	0.072																																		0.072	1.83
2.05	0.081																																		0.081	2.05
2.30	0.091																																		0.091	2.30
2.59	0.102																																		0.102	2.59
2.91	0.114																																		0.114	2.91
3.26	0.128																																		0.128	3.26
3.66	0.144																																		0.144	3.66
4.12	0.162																																		0.162	4.12
4.62	0.182																																		0.182	4.62
5.19	0.204																																		0.204	5.19
5.83	0.229																																		0.229	5.83
6.54	0.258																																		0.258	6.54

NOTE 1 The maximum increase in thickness or width due to the polyester glass fiber covering and treating varnish, if used shall be permitted to be exceeded, provided the overall thickness or width of the covered wire does not exceed the sum of the maximum thickness or width of the bare wire plus the maximum increase in dimension given in the table above.

NOTE 2 The increase due to the heavy film insulation shall be in accordance with the applicable section for film insulated wire in Part 2.

NOTE 3 The minimum increases in dimensions in the table above apply only to the increase in thickness.

NOTE 4 The equivalent mm increases in dimensions are shown below.

Inch	0.007	0.008	0.009	0.010	0.011	0.012	0.013
mm	0.18	0.20	0.23	0.25	0.28	0.30	0.33

© Copyright 2005 by the National Electrical Manufacturers Association.

Copyright National Electrical Manufacturers Association
Provided by IHS under license with NEMA
No reproduction or networking permitted without license from IHS
Not for Resale

Table 1-17
RANGE OF INCREASE IN DIMENSIONS, INCHES
DOUBLE POLYESTER GLASS FIBER COVERED BARE RECTANGULAR COPPER WIRE

(Applies to MW 46-C Double, MW 48-C Double, and MW 53-C Double)

Nominal Thickness		Nominal Width																														Nominal Thickness	
mm		2.05	2.18	2.30	2.44	2.59	2.74	2.91	3.08	3.26	3.46	3.66	3.88	4.12	4.36	4.62	4.90	5.19	5.50	5.83	6.18	6.54	6.93	7.35	7.79	8.25	8.74	9.27	9.82	10.40	11.03	11.68	12.38	13.12	mm	
	Inches	0.081	0.086	0.091	0.096	0.102	0.108	0.114	0.121	0.128	0.136	0.144	0.153	0.162	0.172	0.182	0.193	0.204	0.217	0.229	0.243	0.258	0.273	0.289	0.307	0.325	0.344	0.365	0.387	0.410	0.434	0.460	0.487	0.517	Inches	
1.02	0.040	0.008-0.011							0.008-0.012				0.009-0.013				0.010-0.014				0.011-0.015						0.011-0.016								0.040	1.02
1.15	0.045																																		0.045	1.15
1.29	0.051																																		0.051	1.29
1.45	0.057																																		0.057	1.45
1.63	0.064																																		0.064	1.63
1.83	0.072																																		0.072	1.83
2.05	0.081																																		0.081	2.05
2.30	0.091																																		0.091	2.30
2.59	0.102								0.009-0.013																										0.102	2.59
2.91	0.114																																		0.114	2.91
3.26	0.128																																		0.128	3.26
3.66	0.144																			0.011-0.015															0.144	3.66
4.12	0.162																																		0.162	4.12
4.62	0.182																																		0.182	4.62
5.19	0.204																																		0.204	5.19
5.83	0.229																																		0.229	5.83
6.54	0.258																																		0.258	6.54

NOTE 1 The maximum increase in thickness or width due to the polyester glass fiber covering and treating varnish, if used shall be permitted to be exceeded, provided the overall thickness or width of the covered wire does not exceed the sum of the maximum thickness or width of the bare wire plus the maximum increase in dimension given in the table above.

NOTE 2 The minimum increases in dimensions in the table above apply only to the increase in thickness.

NOTE 3 The equivalent mm increases in dimensions are shown below.

Inch	0.008	0.009	0.010	0.011	0.012	0.013	0.014	0.015	0.016
mm	0.20	0.23	0.25	0.28	0.30	0.33	0.36	0.38	0.41

© Copyright 2005 by the National Electrical Manufacturers Association.

Copyright National Electrical Manufacturers Association
Provided by IHS under license with NEMA
No reproduction or networking permitted without license from IHS
Not for Resale

Table 1-18
RANGE OF INCREASE IN DIMENSIONS, INCHES
DOUBLE POLYESTER GLASS FIBER COVERED HEAVY FILM COATED RECTANGULAR COPPER WIRE

Applies to MW 46-C Double, MW 48-C Double, and MW 53-C Double

The increases in the table below apply to the total insulation (film coating plus polyester glass fiber)

Nominal Thickness		Nominal Width																														Nominal Thickness	
mm		2.05	2.18	2.30	2.44	2.59	2.74	2.91	3.08	3.26	3.46	3.66	3.88	4.12	4.36	4.62	4.90	5.19	5.50	5.83	6.18	6.54	6.93	7.35	7.79	8.25	8.74	9.27	9.82	10.40	11.03	11.68	12.38	13.12	mm	
	Inches	0.081	0.086	0.091	0.096	0.102	0.108	0.114	0.121	0.128	0.136	0.144	0.153	0.162	0.172	0.182	0.193	0.204	0.217	0.229	0.243	0.258	0.273	0.289	0.307	0.325	0.344	0.365	0.387	0.410	0.434	0.460	0.487	0.517	Inches	
1.02	0.040	0.011-0.016							0.012-0.017				0.013-0.018				0.013-0.019				0.014-0.020						0.015-0.021								0.040	1.02
1.15	0.045																																		0.045	1.15
1.29	0.051																																		0.051	1.29
1.45	0.057																																		0.057	1.45
1.63	0.064																																		0.064	1.63
1.83	0.072																																		0.072	1.83
2.05	0.081																																		0.081	2.05
2.30	0.091																																		0.091	2.30
2.59	0.102																																		0.102	2.59
2.91	0.114																																		0.114	2.91
3.26	0.128																																		0.128	3.26
3.66	0.144																																		0.144	3.66
4.12	0.162																																		0.162	4.12
4.62	0.182																																		0.182	4.62
5.19	0.204																																		0.204	5.19
5.83	0.229																																		0.229	5.83
6.54	0.258																																		0.258	6.54

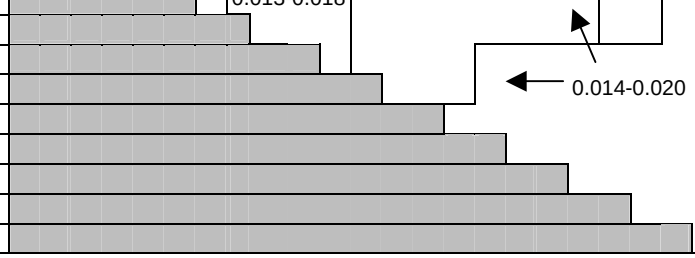

NOTE 1 The maximum increase in thickness or width due to the polyester glass fiber covering and treating varnish, if used shall be permitted to be exceeded, provided the overall thickness or width of the covered wire does not exceed the sum of the maximum thickness or width of the bare wire plus the maximum increase in dimension given in the table above.

NOTE 2 The increase due to the heavy film insulation shall be in accordance with the applicable section for film insulated wire in Part 2.

NOTE 3 The minimum increases in dimension in the table above apply only to the increase in thickness.

NOTE 4 The equivalent mm increases in dimensions are shown below.

Inch	0.011	0.012	0.013	0.014	0.015	0.016	0.017	0018	0.019	0.020	0.021
mm	0.28	0.30	0.33	0.36	0.38	0.41	043	0.46	0.48	0.51	0.53

© Copyright 2005 by the National Electrical Manufacturers Association.

Copyright National Electrical Manufacturers Association
Provided by IHS under license with NEMA
No reproduction or networking permitted without license from IHS
Not for Resale

Table 1-19
SINGLE GLASS FIBER COVERED, HEAVY FILM INSULATED SQUARE COPPER MAGNET WIRE– MINIMUM INCREASE AND MAXIMUM OVERALL DIMENSIONS DUE TO INSULATION

Applies to MW 42-C Single, MW 43-C Single and MW 52-C Single

Dimensions in Inches

AWG Size	Bare Wire Dimensions			Radii (± 25%)	Heavy Film Coated Single Glass Covered	
	Minimum	Nominal	Maximum	Nominal	Minimum Increase	Maximum Overall
1/0	0.3219	0.3249	0.3279	0.039	0.011	0.344
1	0.2864	0.2893	0.2922	0.039	0.010	0.307
2	0.2550	0.2576	0.2602	0.039	0.010	0.275
3	0.2271	0.2294	0.2317	0.039	0.010	0.247
4	0.2023	0.2043	0.2063	0.039	0.010	0.221
5	0.1801	0.1819	0.1837	0.039	0.009	0.198
6	0.1604	0.1620	0.1636	0.031	0.009	0.178
7	0.1429	0.1443	0.1457	0.031	0.009	0.159
8	0.1272	0.1285	0.1298	0.031	0.009	0.143
9	0.1133	0.1144	0.1155	0.026	0.009	0.129
10	0.1009	0.1019	0.1029	0.026	0.009	0.116
11	0.0897	0.0907	0.0917	0.020	0.008	0.104
12	0.0798	0.0808	0.0818	0.020	0.008	0.094
13	0.0710	0.0720	0.0730	0.016	0.008	0.085
14	0.0631	0.0641	0.0651	0.016	0.008	0.077

Dimensions in mm

AWG Size	Bare Wire Dimensions			Radii (± 25%)	Heavy Film Coated Single Glass Covered	
	Minimum	Nominal	Maximum	Nominal	Minimum Increase	Maximum Overall
1/0	8.176	8.252	8.329	1.00	0.279	8.738
1	7.275	7.348	7.422	1.00	0.254	7.798
2	6.477	6.543	6.609	1.00	0.254	6.985
3	5.768	5.827	5.885	1.00	0.254	6.274
4	5.138	5.189	5.240	1.00	0.254	5.613
5	4.575	4.620	4.666	1.00	0.229	5.029
6	4.074	4.115	4.155	0.80	0.229	4.521
7	3.630	3.665	3.701	0.80	0.229	4.039
8	3.231	3.264	3.297	0.80	0.229	3.632
9	2.878	2.906	2.934	0.67	0.229	3.277
10	2.563	2.588	2.614	0.67	0.229	2.946
11	2.278	2.304	2.329	0.50	0.203	2.642
12	2.027	2.052	2.078	0.50	0.203	2.388
13	1.803	1.829	1.854	0.40	0.203	2.159
14	1.603	1.628	1.654	0.40	0.203	1.956

© Copyright 2005 by the National Electrical Manufacturers Association.

Copyright National Electrical Manufacturers Association
Provided by IHS under license with NEMA
No reproduction or networking permitted without license from IHS
Not for Resale

Table 1-20
SINGLE POLYESTER GLASS FIBER COVERED HEAVY FILM INSULATED SQUARE COPPER MAGNET WIRE–MINIMUM INCREASE AND MAXIMUM OVERALL DIMENSIONS DUE TO INSULATION

Applies to MW 46-C Single, MW 48-C Single and MW 53-C Single

Dimensions in inches

AWG	Bare Wire Dimensions			Radii (± 25%)	Heavy Film Coated Single Polyester Glass Covered	
					Minimum	Maximum
Size	Minimum	Nominal	Maximum	Nominal	Increase	Overall
1/0	0.3219	0.3249	0.3279	0.039	0.009	0.341
1	0.2864	0.2893	0.2922	0.039	0.009	0.305
2	0.2550	0.2576	0.2602	0.039	0.008	0.272
3	0.2271	0.2294	0.2317	0.039	0.008	0.244
4	0.2023	0.2043	0.2063	0.039	0.008	0.219
5	0.1801	0.1819	0.1837	0.039	0.008	0.196
6	0.1604	0.1620	0.1636	0.031	0.008	0.175
7	0.1429	0.1443	0.1457	0.031	0.008	0.157
8	0.1272	0.1285	0.1298	0.031	0.008	0.141
9	0.1133	0.1144	0.1155	0.026	0.008	0.127
10	0.1009	0.1019	0.1029	0.026	0.007	0.113
11	0.0897	0.0907	0.0917	0.020	0.007	0.102
12	0.0798	0.0808	0.0818	0.020	0.007	0.092
13	0.0710	0.0720	0.0730	0.016	0.007	0.084
14	0.0631	0.0641	0.0651	0.016	0.007	0.076

Dimensions in mm

AWG	Bare Wire Dimensions			Radii (± 25%)	Heavy Film Coated Single Polyester Glass Covered	
					Minimum	Maximum
Size	Minimum	Nominal	Maximum	Nominal	Increase	Overall
1/0	8.176	8.252	8.329	1.00	0.229	8.661
1	7.275	7.348	7.422	1.00	0.229	7.747
2	6.477	6.543	6.609	1.00	0.203	6.909
3	5.768	5.827	5.885	1.00	0.203	6.198
4	5.138	5.189	5.240	1.00	0.203	5.563
5	4.575	4.620	4.666	1.00	0.203	4.978
6	4.074	4.115	4.155	0.80	0.203	4.445
7	3.630	3.665	3.701	0.80	0.203	3.988
8	3.231	3.264	3.297	0.80	0.203	3.581
9	2.878	2.906	2.934	0.67	0.203	3.226
10	2.563	2.588	2.614	0.67	0.178	2.870
11	2.278	2.304	2.329	0.50	0.178	2.591
12	2.027	2.052	2.078	0.50	0.178	2.337
13	1.803	1.829	1.854	0.40	0.178	2.134
14	1.603	1.628	1.654	0.40	0.178	1.930

© Copyright 2005 by the National Electrical Manufacturers Association.

Copyright National Electrical Manufacturers Association
Provided by IHS under license with NEMA
No reproduction or networking permitted without license from IHS
Not for Resale

Table 1-21
DOUBLE GLASS FIBER COVERED, BARE OR HEAVY FILM INSULATED SQUARE COPPER MAGNET WIRE–MINIMUM INCREASE AND MAXIMUM OVERALL DIMENSIONS DUE TO INSULATION

Applies to MW 42-C Double, MW 43-C Double and MW 52-C Double

Dimensions in inches

Square AWG Size	Bare Wire Dimensions			Nominal Radii ± 25%	Bare Double-glass-covered		Heavy-film-coated Double-glass-covered	
	Minimum inches	Nominal inches	Maximum inches	Inches	Minimum Increase Inches	Maximum Overall inches	Minimum Increase* inches	Maximum Overall inches
1/0	0.3219	0.3249	0.3279	0.039	0.013	0.346	0.016	0.351
1	0.2864	0.2893	0.2922	0.039	0.012	0.309	0.015	0.314
2	0.2550	0.2576	0.2602	0.039	0.012	0.277	0.015	0.282
3	0.2271	0.2294	0.2317	0.039	0.011	0.248	0.014	0.253
4	0.2023	0.2043	0.2063	0.039	0.011	0.222	0.014	0.227
5	0.1801	0.1819	0.1837	0.039	0.011	0.199	0.014	0.204
6	0.1604	0.1620	0.1636	0.031	0.011	0.179	0.014	0.184
7	0.1429	0.1443	0.1457	0.031	0.010	0.160	0.013	0.165
8	0.1272	0.1285	0.1298	0.031	0.010	0.144	0.013	0.149
9	0.1133	0.1144	0.1155	0.026	0.009	0.129	0.012	0.134
10	0.1009	0.1019	0.1029	0.026	0.009	0.116	0.012	0.121
11	0.0897	0.0907	0.0917	0.020	0.008	0.104	0.011	0.109
12	0.0798	0.0808	0.0818	0.020	0.008	0.094	0.011	0.099
13	0.0710	0.0720	0.0730	0.016	0.008	0.085	0.011	0.090
14	0.0631	0.0641	0.0651	0.016	0.008	0.077	0.011	0.082

* Minimum increase including film insulation

Dimensions in mm

Square AWG Size	Bare Wire Dimensions			Nominal Radii ± 25%	Bare Double-glass-covered		Heavy-film-insulated Double-glass-covered	
	Minimum mm	Nominal mm	Maximum mm	mm	Minimum Increase mm	Maximum Overall mm	Minimum Increase* mm	Maximum Overall mm
1/0	8.176	8.252	8.329	1.00	0.330	8.788	0.406	8.915
1	7.275	7.348	7.422	1.00	0.305	7.849	0.381	7.976
2	6.477	6.543	6.609	1.00	0.305	7.036	0.381	7.163
3	5.768	5.827	5.885	1.00	0.279	6.299	0.356	6.426
4	5.138	5.189	5.240	1.00	0.279	5.639	0.356	5.766
5	4.575	4.620	4.666	1.00	0.279	5.055	0.356	5.182
6	4.074	4.115	4.155	0.80	0.279	4.547	0.356	4.674
7	3.630	3.665	3.701	0.80	0.254	4.064	0.330	4.191
8	3.231	3.264	3.297	0.80	0.254	3.658	0.330	3.785
9	2.878	2.906	2.934	0.67	0.229	3.277	0.305	3.404
10	2.563	2.588	2.614	0.67	0.229	2.946	0.305	3.073
11	2.278	2.304	2.329	0.50	0.203	2.642	0.279	2.769
12	2.027	2.052	2.078	0.50	0.203	2.388	0.279	2.515
13	1.803	1.829	1.854	0.40	0.203	2.159	0.279	2.286
14	1.603	1.628	1.654	0.40	0.203	1.956	0.279	2.083

* Minimum increase including film insulation

© Copyright 2005 by the National Electrical Manufacturers Association.

Copyright National Electrical Manufacturers Association
Provided by IHS under license with NEMA
No reproduction or networking permitted without license from IHS
Not for Resale

Table 1-22
DOUBLE POLYESTER GLASS FIBER COVERED, BARE OR HEAVY FILM INSULATED SQUARE COPPER MAGNET WIRE–MINIMUM INCREASE AND MAXIMUM OVERALL DIMENSIONS DUE TO INSULATION

Applies to MW 46-C Double, MW 48-C Double and MW 53-C Double

Dimensions in inches

Square AWG Size	Bare Wire Dimensions			Nominal	Bare Double-glass-covered		Heavy-film-coated Double-glass-covered	
	Minimum inches	Nominal inches	Maximum inches	Radii ± 25% Inches	Minimum Increase Inches	Maximum Overall inches	Minimum Increase* inches	Maximum Overall inches
1/0	0.3219	0.3249	0.3279	0.039	0.012	0.344	0.015	0.349
1	0.2864	0.2893	0.2922	0.039	0.012	0.308	0.015	0.313
2	0.2550	0.2576	0.2602	0.039	0.012	0.276	0.015	0.281
3	0.2271	0.2294	0.2317	0.039	0.012	0.248	0.015	0.253
4	0.2023	0.2043	0.2063	0.039	0.012	0.222	0.015	0.227
5	0.1801	0.1819	0.1837	0.039	0.011	0.199	0.014	0.204
6	0.1604	0.1620	0.1636	0.031	0.011	0.179	0.014	0.184
7	0.1429	0.1443	0.1457	0.031	0.010	0.160	0.013	0.165
8	0.1272	0.1285	0.1298	0.031	0.009	0.143	0.012	0.148
9	0.1133	0.1144	0.1155	0.031	0.009	0.129	0.012	0.134
10	0.1009	0.1019	0.1029	0.026	0.008	0.115	0.011	0.120
11	0.0897	0.0907	0.0917	0.020	0.008	0.103	0.011	0.108
12	0.0798	0.0808	0.0818	0.020	0.008	0.093	0.011	0.098
13	0.0710	0.0720	0.0730	0.016	0.008	0.084	0.011	0.089
14	0.0631	0.0641	0.0651	0.016	0.008	0.076	0.011	0.081

* Minimum increase including film insulation

Dimensions in mm

Square AWG Size	Bare Wire Dimensions			Nominal	Bare Double-glass-covered		Heavy-film-insulated Double-glass-covered	
	Minimum mm	Nominal mm	Maximum mm	Radii ± 25% mm	Minimum Increase mm	Maximum Overall mm	Minimum Increase* mm	Maximum Overall mm
1/0	8.176	8.252	8.329	1.00	0.305	8.738	0.381	8.865
1	7.275	7.348	7.422	1.00	0.305	7.823	0.381	7.950
2	6.477	6.543	6.609	1.00	0.305	7.010	0.381	7.137
3	5.768	5.827	5.885	1.00	0.305	6.299	0.381	6.426
4	5.138	5.189	5.240	1.00	0.305	5.639	0.381	5.766
5	4.575	4.620	4.666	1.00	0.279	5.055	0.356	5.182
6	4.074	4.115	4.155	0.80	0.279	4.547	0.356	4.674
7	3.630	3.665	3.701	0.80	0.254	4.064	0.330	4.191
8	3.231	3.264	3.297	0.80	0.229	3.632	0.305	3.759
9	2.878	2.906	2.934	0.67	0.229	3.277	0.305	3.404
10	2.563	2.588	2.614	0.67	0.203	2.921	0.279	3.048
11	2.278	2.304	2.329	0.50	0.203	2.616	0.279	2.743
12	2.027	2.052	2.078	0.50	0.203	2.362	0.279	2.489
13	1.803	1.829	1.854	0.40	0.203	2.134	0.279	2.261
14	1.603	1.628	1.654	0.40	0.203	1.930	0.279	2.057

* Minimum increase including film insulation

© Copyright 2005 by the National Electrical Manufacturers Association.

Copyright National Electrical Manufacturers Association
Provided by IHS under license with NEMA
No reproduction or networking permitted without license from IHS
Not for Resale

Table 1-23
COMPARISON BETWEEN AWG AND IEC R-40 SERIES BARE WIRE DIAMETERS

AWG Size	Nominal Bare Wire Diameter inches	Nominal Bare Wire Diameter mm*	Nominal Dia. R-40 Series mm	Nominal ** AWG Area mm²	Nominal R-40 Series Area mm²	% Difference † Nominal Diameter R-40 to AWG	% Difference † Nominal Area R-40 to AWG	AWG Size
4	0.2043	5.189	5.000	21.149	19.635	-3.6	-7.2	4
4.5	0.1928	4.897	4.750	18.835	17.721	-3.0	-5.9	4.5
5	0.1819	4.620	4.500	16.766	15.904	-2.6	-5.1	5
5.5	0.1717	4.361	4.250	14.938	14.186	-2.5	-5.0	5.5
6	0.1620	4.115	4.000	13.298	12.566	-2.8	-5.5	6
6.5	0.1529	3.884	3.750	11.846	11.045	-3.4	-6.8	6.5
7	0.1443	3.665	3.550	10.551	9.898	-3.1	-6.2	7
7.5	0.1362	3.459	3.350	9.400	8.814	-3.2	-6.2	7.5
8	0.1285	3.264	3.150	8.367	7.793	-3.5	-6.9	8
8.5	0.1213	3.081	3.000	7.456	7.069	-2.6	-5.2	8.5
9	0.1144	2.906	2.800	6.631	6.158	-3.6	-7.1	9
9.5	0.1080	2.743	2.650	5.910	5.515	-3.4	-6.7	9.5
10	0.1019	2.588	2.500	5.261	4.909	-3.4	-6.7	10
10.5	0.0962	2.443	2.360	4.689	4.374	-3.4	-6.7	10.5
11	0.0907	2.304	2.240	4.168	3.941	-2.8	-5.5	11
11.5	0.0856	2.174	2.120	3.713	3.530	-2.5	-4.9	11.5
12	0.0808	2.052	2.000	3.308	3.142	-2.5	-5.0	12
12.5	0.0763	1.938	1.900	2.950	2.835	-2.0	-3.9	12.5
13	0.0720	1.829	1.800	2.627	2.545	-1.6	-3.1	13
13.5	0.0679	1.725	1.700	2.336	2.270	-1.4	-2.8	13.5
14	0.0641	1.628	1.600	2.082	2.011	-1.7	-3.4	14
14.5	0.0605	1.537	1.500	1.855	1.767	-2.4	-4.7	14.5
15	0.0571	1.450	1.400	1.652	1.539	-3.5	-6.8	15
15.5	0.0539	1.369	1.320	1.472	1.368	-3.6	-7.0	15.5
16	0.0508	1.290	1.250	1.308	1.227	-3.1	-6.2	16
16.5	0.0480	1.219	1.180	1.167	1.094	-3.2	-6.3	16.5
17	0.0453	1.151	1.120	1.040	0.985	-2.7	-5.3	17
17.5	0.0427	1.085	1.060	0.924	0.882	-2.3	-4.5	17.5
18	0.0403	1.024	1.000	0.823	0.785	-2.3	-4.6	18
18.5	0.0380	0.965	0.950	0.732	0.709	-1.6	-3.1	18.5
19	0.0359	0.912	0.900	0.653	0.636	-1.3	-2.6	19
19.5	0.0339	0.861	0.850	0.582	0.567	-1.3	-2.6	19.5
20	0.0320	0.813	0.800	0.519	0.503	-1.6	-3.1	20
20.5	0.0302	0.767	0.750	0.462	0.442	-2.2	-4.4	20.5
21	0.0285	0.724	0.710	0.412	0.396	-1.9	-3.8	21
21.5	0.0269	0.683	0.670	0.367	0.353	-1.9	-3.8	21.5
22	0.0253	0.643	0.630	0.324	0.312	-2.0	-3.9	22
22.5	0.0239	0.607	0.600	0.289	0.283	-1.2	-2.3	22.5
23	0.0226	0.574	0.560	0.259	0.246	-2.4	-4.8	23
23.5	0.0213	0.541	0.530	0.230	0.221	-2.0	-4.0	23.5
24	0.0201	0.511	0.500	0.205	0.196	-2.1	-4.1	24
24.5	0.0190	0.483	0.475	0.183	0.177	-1.6	-3.1	24.5
25	0.0179	0.455	0.450	0.162	0.159	-1.0	-2.0	25
25.5	0.0169	0.429	0.425	0.145	0.142	-1.0	-2.0	25.5
26	0.0159	0.404	0.400	0.128	0.126	-1.0	-1.9	26
26.5	0.0150	0.381	0.375	0.114	0.110	-1.6	-3.1	26.5

* These diameters are rounded numbers calculated from the inch values.
** The nominal area of AWG wires have been calculated in square inch units and then converted to square millimeters.
† The differences in diameter and area have been calculated from values more precise than those shown in the table.

© Copyright 2005 by the National Electrical Manufacturers Association.

Copyright National Electrical Manufacturers Association
Provided by IHS under license with NEMA
No reproduction or networking permitted without license from IHS
Not for Resale

Table 1-23 Continued

AWG Size	Nominal Bare Wire Diameter inches	Nominal Bare Wire Diameter mm*	Nominal Dia. R-40 Series mm	Nominal ** AWG Area mm^2	Nominal R-40 Series Area mm^2	% Difference † Nominal Diameter R-40 to AWG	% Difference † Nominal Area R-40 to AWG	AWG Size
27	0.0142	0.361	0.355	0.102	0.0990	-1.6	-3.1	27
27.5	0.0134	0.340	0.335	0.0910	0.0881	-1.6	-3.1	27.5
28	0.0126	0.320	0.315	0.0804	0.0779	-1.6	-3.1	28
28.5	0.0119	0.302	0.300	0.0718	0.0707	-0.8	-1.5	28.5
29	0.0113	0.287	0.280	0.0647	0.0616	-2.4	-4.8	29
29.5	0.0106	0.269	0.265	0.0569	0.0552	-1.6	-3.1	29.5
30	0.0100	0.254	0.250	0.0507	0.0491	-1.6	-3.1	30
30.5	0.0095	0.241	0.236	0.0457	0.0437	-2.2	-4.3	30.5
31	0.0089	0.226	0.224	0.0401	0.0394	-0.9	-1.8	31
31.5	0.0084	0.213	0.212	0.0358	0.0353	-0.7	-1.3	31.5
32	0.0080	0.203	0.200	0.0324	0.0314	-1.6	-3.1	32
32.5	0.0075	0.191	0.190	0.0285	0.0284	-0.3	-0.5	32.5
33	0.0071	0.180	0.180	0.0255	0.0254	-0.2	-0.4	33
33.5	0.0067	0.170	0.170	0.0227	0.0227	-0.1	-0.2	33.5
34	0.0063	0.160	0.160	0.0201	0.0201	0.0	0.0	34
34.5	0.0059	0.150	0.150	0.0176	0.0177	0.1	0.2	34.5
35	0.0056	0.142	0.140	0.0159	0.0154	-1.5	-3.1	35
35.5	0.0053	0.135	0.132	0.0142	0.0137	-1.9	-3.9	35.5
36	0.0050	0.127	0.125	0.0127	0.0123	-1.6	-3.1	36
36.5	0.0047	0.119	0.118	0.0112	0.0109	-1.2	-2.3	36.5
37	0.0045	0.114	0.112	0.0103	0.00985	-2.0	-4.0	37
37.5	0.0042	0.107	0.106	0.00894	0.00882	-0.7	-1.3	37.5
38	0.0040	0.102	0.100	0.00811	0.00785	-1.6	-3.1	38
38.5	0.0037	0.094	0.095	0.00694	0.00709	1.1	2.2	38.5
39	0.0035	0.089	0.090	0.00621	0.00636	1.2	2.5	39
39.5	0.0033	0.084	0.085	0.00552	0.00567	1.4	2.8	39.5
40	0.0031	0.079	0.080	0.00487	0.00503	1.7	3.2	40
40.5	0.0030	0.076	0.075	0.00456	0.00442	-1.6	-3.1	40.5
41	0.0028	0.071	0.071	0.00397	0.00396	-0.1	-0.3	41
41.5	0.0026	0.066	0.067	0.00343	0.00353	1.5	2.9	41.5
42	0.0025	0.064	0.063	0.00317	0.00312	-0.8	-1.6	42
42.5	0.0024	0.061	0.060	0.00292	0.00283	-1.6	-3.1	42.5
43	0.0022	0.056	0.056	0.00245	0.00243	0.2	0.4	43
43.5	0.0021	0.053	0.053	0.00223	0.00221	-0.6	-1.3	43.5
44	0.0020	0.051	0.050	0.00203	0.00196	-1.6	-3.1	44
44.5	0.0019	0.048	0.048	0.00183	0.00177	-0.6	-1.1	44.5

* These diameters are rounded numbers calculated from the inch values.
** The nominal area of AWG wires have been calculated in square inch units and then converted to square millimeters.
† The differences in diameter and area have been calculated from values more precise than those shown in the table.

© Copyright 2005 by the National Electrical Manufacturers Association.

Copyright National Electrical Manufacturers Association
Provided by IHS under license with NEMA
No reproduction or networking permitted without license from IHS
Not for Resale

Copyright National Electrical Manufacturers Association
Provided by IHS under license with NEMA
No reproduction or networking permitted without license from IHS

© Copyright 2005 by the National Electrical Manufacturers Association.

Not for Resale

Table 1-24
COMPARISON BETWEEN NEMA AND IEC INCREASES AND OVERALL DIAMETERS

(inches)

AWG Size	Nominal Bare	Single Minimum Increase	Single Maximum O.D.	Heavy Minimum Increase	Heavy Maximum O.D.	Triple Minimum Increase	Triple Maximum O.D.	IEC Nominal Diameter**	Grade 1* Minimum Increase	Grade 1* Maximum O.D.	Grade 2* Minimum Increase	Grade 2* Maximum O.D.	Grade 3* Minimum Increase	Grade 3* Maximum O.D.	AWG Size
14	0.0641	0.0016	0.0666	0.0032	0.0682	0.0048	0.0698	0.0630	0.0015	0.0657	0.0028	0.0672	0.0042	0.0685	14
15	0.0571	0.0015	0.0594	0.0030	0.0610	0.0046	0.0625	0.0551	0.0014	0.0578	0.0027	0.0591	0.0041	0.0604	15
16	0.0508	0.0014	0.0531	0.0029	0.0545	0.0043	0.0560	0.0492	0.0014	0.0518	0.0026	0.0531	0.0039	0.0544	16
17	0.0453	0.0014	0.0475	0.0028	0.0488	0.0041	0.0502	0.0441	0.0013	0.0466	0.0026	0.0479	0.0039	0.0491	17
18	0.0403	0.0013	0.0424	0.0026	0.0437	0.0039	0.0450	0.0394	0.0013	0.0418	0.0025	0.0431	0.0037	0.0443	18
19	0.0359	0.0012	0.0379	0.0025	0.0391	0.0037	0.0404	0.0354	0.0013	0.0378	0.0024	0.0389	0.0035	0.0401	19
20	0.0320	0.0012	0.0340	0.0024	0.0351	0.0035	0.0363	0.0315	0.0012	0.0337	0.0022	0.0348	0.0335	0.0359	20
21	0.0285	0.0011	0.0303	0.0022	0.0315	0.0034	0.0326	0.0280	0.0011	0.0300	0.0021	0.0311	0.0031	0.0320	21
22	0.0253	0.0011	0.0270	0.0021	0.0281	0.0032	0.0292	0.0248	0.0011	0.0267	0.0020	0.0277	0.0030	0.0287	22
23	0.0226	0.0010	0.0243	0.0020	0.0253	0.0030	0.0263	0.0220	0.0010	0.0239	0.0019	0.0248	0.0028	0.0257	23
24	0.0201	0.0010	0.0217	0.0019	0.0227	0.0029	0.0236	0.0197	0.0009	0.0214	0.0018	0.0223	0.0026	0.0231	24
25	0.0179	0.0009	0.0194	0.0018	0.0203	0.0027	0.0212	0.0177	0.0009	0.0193	0.0017	0.0202	0.0025	0.0210	25
26	0.0159	0.0009	0.0173	0.0017	0.0182	0.0026	0.0191	0.0157	0.0008	0.0173	0.0016	0.0181	0.0024	0.0188	26
27	0.0142	0.0008	0.0156	0.0016	0.0165	0.0025	0.0173	0.0140	0.0008	0.0154	0.0015	0.0162	0.0022	0.0169	27
28	0.0126	0.0008	0.0140	0.0016	0.0147	0.0023	0.0155	0.0124	0.0007	0.0137	0.0014	0.0144	0.0021	0.0151	28
29	0.0113	0.0007	0.0126	0.0015	0.0133	0.0022	0.0141	0.0110	0.0007	0.0123	0.0013	0.0130	0.0020	0.0136	29
30	0.0100	0.0007	0.0112	0.0013	0.0119	0.0020	0.0128	0.0098	0.0007	0.0111	0.0013	0.0117	0.0019	0.0123	30
31	0.0089	0.0006	0.0100	0.0012	0.0108	0.0018	0.0114	0.0088	0.0006	0.0099	0.0011	0.0105	0.0017	0.0110	31
32	0.0080	0.0006	0.0091	0.0011	0.0098	0.0017	0.0103	0.0079	0.0006	0.0089	0.0011	0.0094	0.0015	0.0099	32
33	0.0071	0.0005	0.0081	0.0010	0.0088	0.0015	0.0092	0.0071	0.0005	0.0080	0.0010	0.0085	0.0014	0.0090	33
34	0.0063	0.0005	0.0072	0.0009	0.0078	0.0014	0.0082	0.0063	0.0005	0.0072	0.0009	0.0076	0.0013	0.0081	34
35	0.0056	0.0004	0.0064	0.0009	0.0070	0.0013	0.0074	0.0055	0.0004	0.0063	0.0008	0.0067	0.0012	0.0071	35
36	0.0050	0.0004	0.0058	0.0008	0.0063	0.0012	0.0067	0.0049	0.0004	0.0057	0.0007	0.0061	0.0011	0.0064	36
37	0.0045	0.0004	0.0053	0.0007	0.0057	0.0011	0.0060	0.0044	0.0004	0.0051	0.0007	0.0055	0.0010	0.0058	37
38	0.0040	0.0003	0.0047	0.0007	0.0051	0.0010	0.0054	0.0039	0.0003	0.0046	0.0006	0.0049	0.0009	0.0052	38
39	0.0035	0.0003	0.0041	0.0006	0.0045	0.0009	0.0048	0.0035	0.0003	0.0041	0.0006	0.0044	0.0009	0.0047	39
40	0.0031	0.0003	0.0037	0.0005	0.0040	0.0008	0.0043	0.0031	0.0003	0.0037	0.0006	0.0040	0.0008	0.0043	40

Table continued on next page.

* Minimum increases and maximum overall diameters based upon IEC 60317-0-1 and converted to inches using the factor 25.4, exact.

** Nominal diameters are based upon the ISO R-20 series.

NOTE–No minimum increases are given for grades 2 and 3 for nominal sizes smaller than 0.071 mm in IEC 60317-0-1.

Copyright National Electrical Manufacturers Association
Provided by IHS under license with NEMA
No reproduction or networking permitted without license from IHS

Table 1-24 Continued

(inches)

AWG Size	Nominal Bare	Single Minimum Increase	Single Maximum O.D.	Heavy Minimum Increase	Heavy Maximum O.D.	Triple Minimum Increase	Triple Maximum O.D.	IEC Nominal Diameter**	Grade 1* Minimum Increase	Grade 1* Maximum O.D.	Grade 2* Minimum Increase	Grade 2* Maximum O.D.	Grade 3* Minimum Increase	Grade 3* Maximum O.D.	AWG Size
41	0.0028	0.0003	0.0034	0.0005	0.0036	0.0008	0.0040	0.0028	0.0003	0.0033	0.0005	0.0036	0.0007	0.0038	41
42	0.0025	0.0002	0.0030	0.0005	0.0033	0.0007	0.0036	0.0025	0.0002	0.0030	...	0.0033	...	...	42
43	0.0022	0.0002	0.0026	0.0004	0.0029	0.0006	0.0032	0.0022	0.0002	0.0026	...	0.0029	...	...	43
44	0.0020	0.0002	0.0024	0.0004	0.0027	0.0006	0.0030	0.0020	0.0002	0.0024	...	0.0026	...	...	44
45	0.00176	0.0002	0.0022	0.0004	0.0024	0.0005	0.0027	0.0018	0.0002	0.0022	...	0.0024	...	...	45
46	0.00157	0.0002	0.0020	0.0003	0.0021	0.0005	0.0024	0.0016	0.0002	0.0019	...	0.0021	...	...	46
47	0.00140	0.0001	0.0017	0.0003	0.0019	...	...	0.0014	0.0002	0.0017	...	0.0019	...	...	47
48	0.00124	0.0001	0.0015	0.0002	0.0017	...	...	0.0013	0.0001	0.0015	...	0.0017	...	...	48
49	0.00111	0.0001	0.0013	0.0002	0.0015	...	...	0.0011	0.0001	0.0013	...	0.0015	...	...	49
50	0.00099	0.0001	0.0012	0.0002	0.0014	...	...	0.0010	0.0001	0.0012	...	0.0013	...	...	50
51	0.00088	0.00010	0.00110	...	...	...	...	0.0009	0.0001	0.0011	...	0.0012	...	...	51
52	0.00078	0.00010	0.00100	...	...	...	...	0.0008	0.0001	0.0009	...	0.0011	...	...	52
53	0.00070	0.00005	0.00085	...	...	...	...	0.0007	0.0001	0.00087	...	0.00094	...	...	53
54	0.00062	0.00005	0.00075	...	...	...	...	...	...	...	...	...	...	...	54
55	0.00055	0.00005	0.00070	...	...	...	...	...	...	...	...	...	...	...	55
56	0.00049	0.00005	0.00065	...	...	...	...	...	...	...	...	...	...	...	56

* Minimum increases and maximum overall diameters based upon IEC 60317-0-1 and converted to inches using the factor 25.4, exact.

** Nominal diameters are based upon the ISO R-20 series.

NOTE–No minimum increases are given for grades 2 and 3 for nominal sizes smaller than 0.071 mm in IEC 60317-0-1.

© Copyright 2005 by the National Electrical Manufacturers Association.
Not for Resale

Copyright National Electrical Manufacturers Association
Provided by IHS under license with NEMA
No reproduction or networking permitted without license from IHS

© Copyright 2005 by the National Electrical Manufacturers Association.

Not for Resale

Table 1-24
COMPARISON BETWEEN NEMA AND IEC INCREASES AND OVERALL DIAMETERS

(millimeters)

AWG Size	Nominal Bare	Single Minimum Increase	Single Maximum O.D.	Heavy Minimum Increase	Heavy Maximum O.D.	Triple Minimum Increase	Triple Maximum O.D.	IEC Nominal Diameter**	Grade 1* Minimum Increase	Grade 1* Maximum O.D.	Grade 2* Minimum Increase	Grade 2* Maximum O.D.	Grade 3* Minimum Increase	Grade 3* Maximum O.D.	AWG Size
14	1.628	0.041	1.692	0.081	1.732	0.122	1.773	1.600	0.038	1.670	0.071	1.706	0.107	1.740	14
15	1.450	0.038	1.509	0.076	1.549	0.117	1.588	1.400	0.036	1.468	0.069	1.502	0.103	1.535	15
16	1.290	0.036	1.349	0.074	1.384	0.109	1.422	1.250	0.035	1.316	0.067	1.349	0.100	1.381	16
17	1.151	0.036	1.207	0.071	1.240	0.104	1.275	1.120	0.034	1.184	0.065	1.217	0.098	1.248	17
18	1.024	0.033	1.077	0.066	1.110	0.099	1.143	1.000	0.034	1.062	0.063	1.094	0.095	1.124	18
19	0.912	0.030	0.963	0.064	0.993	0.094	1.026	0.900	0.032	0.959	0.060	0.989	0.090	1.018	19
20	0.813	0.030	0.864	0.061	0.892	0.089	0.922	0.800	0.030	0.855	0.056	0.884	0.850	0.911	20
21	0.724	0.028	0.770	0.056	0.800	0.086	0.828	0.710	0.028	0.762	0.053	0.789	0.080	0.814	21
22	0.643	0.028	0.686	0.053	0.714	0.081	0.742	0.630	0.027	0.679	0.050	0.704	0.075	0.728	22
23	0.574	0.025	0.617	0.051	0.643	0.076	0.668	0.560	0.025	0.606	0.047	0.630	0.071	0.653	23
24	0.511	0.025	0.551	0.048	0.577	0.074	0.599	0.500	0.024	0.544	0.045	0.566	0.067	0.587	24
25	0.455	0.023	0.493	0.046	0.516	0.069	0.538	0.450	0.022	0.491	0.042	0.513	0.064	0.533	25
26	0.404	0.023	0.439	0.043	0.462	0.066	0.485	0.400	0.021	0.439	0.040	0.459	0.060	0.478	26
27	0.361	0.020	0.396	0.041	0.419	0.064	0.439	0.355	0.020	0.392	0.038	0.411	0.057	0.428	27
28	0.320	0.020	0.356	0.041	0.373	0.058	0.394	0.315	0.019	0.349	0.035	0.367	0.053	0.384	28
29	0.287	0.018	0.320	0.038	0.338	0.056	0.358	0.280	0.018	0.312	0.033	0.329	0.050	0.345	29
30	0.254	0.018	0.284	0.033	0.302	0.051	0.325	0.250	0.017	0.281	0.032	0.297	0.048	0.312	30
31	0.226	0.015	0.254	0.030	0.274	0.046	0.290	0224	0.015	0.252	0.029	0.266	0.043	0.280	31
32	0.203	0.015	0.231	0.028	0.249	0.043	0.262	0.200	0.014	0.226	0.027	0.239	0.039	0.252	32
33	0.180	0.013	0.206	0.025	0.224	0.038	0.234	0.180	0.013	0.204	0.025	0.217	0.036	0.229	33
34	0.160	0.013	0.183	0.023	0.198	0.036	0.208	0.160	0.012	0.182	0.023	0.194	0.033	0.205	34
35	0.142	0.010	0.163	0.023	0.178	0.033	0.188	0.140	0.011	0.160	0.021	0.171	0.030	0.181	35
36	0.127	0.010	0.147	0.020	0.160	0.030	0.170	0.125	0.010	0.144	0.019	0.154	0.028	0.163	36
37	0.114	0.010	0.135	0.018	0.145	0.028	0.152	0.112	0.009	0.130	0.017	0.139	0.026	0.147	37
38	0.102	0.008	0.119	0.018	0.130	0.025	0.137	0.100	0.008	0.117	0.016	0.125	0.023	0.132	38
39	0.089	0.008	0.104	0.015	0.114	0.023	0.122	0.090	0.008	0.105	0.015	0.113	0.022	0.120	39
40	0.079	0.008	0.094	0.013	0.102	0.020	0.109	0.080	0.007	0.094	0.014	0.101	0.020	0.108	40

Table continued on next page.

* Minimum increases and maximum overall diameters based upon IEC 60317-0-1.

** Nominal diameters are based upon the ISO R-20 series.

NOTE–No minimum increases are given for grades 2 and 3 for nominal sizes smaller than 0.071 mm in IEC 60317-0-1.

Copyright National Electrical Manufacturers Association
Provided by IHS under license with NEMA
No reproduction or networking permitted without license from IHS

Table 1-24 Continued

(millimeters)

AWG Size	Nominal Bare	Single Minimum Increase	Single Maximum O.D.	Heavy Minimum Increase	Heavy Maximum O.D.	Triple Minimum Increase	Triple Maximum O.D.	IEC Nominal Diameter**	Grade 1* Minimum Increase	Grade 1* Maximum O.D.	Grade 2* Minimum Increase	Grade 2* Maximum O.D.	Grade 3* Minimum Increase	Grade 3* Maximum O.D.	AWG Size
41	0.071	0.008	0.086	0.013	0.091	0.020	0.102	0.071	0.007	0.084	0.012	0.091	0.018	0.097	41
42	0.064	0.005	0.076	0.013	0.084	0.018	0.091	0.063	0.006	0.076	...	0.083	...	...	42
43	0.056	0.005	0.066	0.010	0.074	0.015	0.081	0.056	0.006	0.067	...	0.074	...	...	43
44	0.051	0.005	0.061	0.010	0.069	0.015	0.076	0.050	0.005	0.060	...	0.066	...	...	44
45	0.0447	0.0050	0.0559	0.0100	0.0610	0.0127	0.0686	0.045	0.005	0.055	...	0.061	...	...	45
46	0.0399	0.0050	0.0508	0.0076	0.0533	0.0127	0.0610	0.040	0.004	0.049	...	0.054	...	...	46
47	0.0356	0.0025	0.0432	0.0076	0.0483	...	...	0.036	0.004	0.044	...	0.049	...	...	47
48	0.0315	0.0025	0.0381	0.0051	0.0432	...	...	0.032	0.003	0.039	...	0.043	...	...	48
49	0.0282	0.0025	0.0330	0.0051	0.0381	...	...	0.028	0.003	0.034	...	0.038	...	...	49
50	0.0251	0.0025	0.0305	0.0051	0.0356	...	...	0.025	0.003	0.031	...	0.034	...	...	50
51	0.0224	0.0025	0.0279	...	...	...	...	0.022	0.002	0.027	...	0.030	...	...	51
52	0.0198	0.0025	0.0254	...	...	...	...	0.020	0.002	0.024	...	0.027	...	...	52
53	0.0178	0.0013	0.0216	...	...	...	...	0.018	0.002	0.022	...	0.024	...	...	53
54	0.0157	0.0013	0.0191	...	...	...	...	...	...	...	...	...	...	...	54
55	0.0140	0.0013	0.0178	...	...	...	...	...	...	...	...	...	...	...	55
56	0.0124	0.0013	0.0165	...	...	...	...	...	...	...	...	...	...	...	56

* Minimum increases and maximum overall diameters based upon IEC 60317-0-1.

** Nominal diameters are based upon the ISO R-20 series.

NOTE–No minimum increases are given for grades 2 and 3 for nominal sizes smaller than 0.071 mm in IEC 60317-0-1.

© Copyright 2005 by the National Electrical Manufacturers Association.
Not for Resale

Part 2
PROPERTIES AND REQUIREMENTS

All properties and requirements for magnet wire contained in Part 2 shall be as indicated in the following specification sheets.

© Copyright 2005 by the National Electrical Manufacturers Association.

Copyright National Electrical Manufacturers Association
Provided by IHS under license with NEMA
No reproduction or networking permitted without license from IHS
Not for Resale

MW 2-C
POLYURETHANE FILM INSULATED ROUND COPPER MAGNET WIRE FOR SOLDERABLE APPLICATIONS, THERMAL CLASS 105

INSULATING MATERIAL The coating is based on polyurethane resins (1.4.2).

THERMAL CLASS 105 as defined in Part 1, Clause 1.8, and when tested in accordance with Part 3, Clause 3.58.1.

GENERAL REQUIREMENTS See Part 1.

Properties	Procedure, Part 3, Clause	Requirement
DIMENSIONS	3.2.1.1	Single 25–56 AWG; Heavy 25–50 AWG in accordance with Table 1-1
ADHERENCE AND FLEXIBILITY	3.3.1	No cracks visible in the film coating
ELONGATION	3.4	Not less than value in Table 3.4.2
HEAT SHOCK	3.5	No cracks visible in the film coating after conditioning at 150°C, following a 20% sudden jerk elongation, using a 6d mandrel for sizes 25–44 AWG
SPRINGBACK	3.7.1	Not greater than the value in Table 3.7.1
DIELECTRIC BREAKDOWN	3.8.3 3.8.7	25–37 AWG Not less than the value in Table 3.8.3.2 38–56 AWG Not less than the value in Table 3.8.7.3
CONTINUITY	3.9.2 3.9.3	25–44 AWG Max allowable discontinuities in accordance with Table 3.9.2.1 45–56 AWG Max number of discontinuities in accordance with Table 3.9.3
SOLDERABILITY	3.13	Covered with continuous film of solder after immersion within the time specified at 360ºC:

AWG Size	Single and Heavy
25–29	6 seconds
30–36	5 seconds
37–46	4 seconds
47–56	3 seconds

PERIODIC CONFORMANCE TESTS		
THERMOPLASTIC FLOW	3.50	Median not less than 170°C
SOLUBILITY	3.51	Specimens immersed in xylene shall not soften sufficiently to expose the bare conductor
DIELECTRIC BREAKDOWN AT RATED TEMPERATURE	3.52	Wire shall not average not less than 75% of the value in Table 3.8.3.2
SCRAPE RESISTANCE	3.59	Lowest "grams-to-fail" load for any one of the three tests and the average of the three tests shall not be less than the values in Table 3.59.2

© Copyright 2005 by the National Electrical Manufacturers Association.

Copyright National Electrical Manufacturers Association
Provided by IHS under license with NEMA
No reproduction or networking permitted without license from IHS
Not for Resale

MW 3-C
POLYURETHANE WITH SELF-BONDING OVERCOAT, FILM INSULATED ROUND COPPER MAGNET WIRE FOR SOLDERABLE APPLICATIONS, THERMAL CLASS 105

INSULATING MATERIAL The conductor shall be coated with a dual film. The underlying coating is based on polyurethane resins (1.4.2). The superimposed coating is based on resins that are self-bonding in character.

THERMAL CLASS 105 as defined in Part 1, Clause 1.8, and when tested in accordance with Part 3, Clause 3.58.1.

GENERAL REQUIREMENTS See Part 1.

Properties	Procedure, Part 3, Clause	Requirement
DIMENSIONS	3.2.1.1	Type 1: 25–52 AWG; Type 2: 25–50 AWG in accordance with Table 1-3
ADHERENCE AND FLEXIBILITY	3.3.1	No cracks visible in the film coating
ELONGATION	3.4	Not less than value in Table 3.4.2
HEAT SHOCK	3.5	No cracks visible in the film coating after conditioning at 150°C, following a 20% sudden jerk elongation, using a 6d mandrel for sizes 25–44 AWG
SPRINGBACK	3.7.1	Not greater than the value in Table 3.7.1
DIELECTRIC BREAKDOWN	3.8.3 3.8.7	25–37 AWG Not less than the value in Table 3.8.3.2 38–52 AWG Not less than the value in Table 3.8.7.3
CONTINUITY	3.9.2 3.9.3	25–44 AWG Max number of discontinuities in accordance with Table 3.9.2.1 45–52 AWG Max number of discontinuities in accordance with Table 3.9.3
SOLDERABILITY	3.13	Covered with continuous film of solder after immersion within the time specified at 360°C:

AWG Size	Single and Heavy
25–29	6 seconds
30–36	5 seconds
37–46	4 seconds
47–52	3 seconds

PERIODIC CONFORMANCE TESTS		
THERMOPLASTIC FLOW	3.50	Median not less than 170°C
DIELECTRIC BREAKDOWN AT RATED TEMPERATURE	3.52	Average not less than 75% of the value in Table 3.8.3.2
BOND–ROOM TEMPERATURE	3.57.3	No separation of turns with Type 2 film insulated 26 and 36 AWG

--`,,```,,,,````-`-`,,`,,`,`,,`---

© Copyright 2005 by the National Electrical Manufacturers Association.

Copyright National Electrical Manufacturers Association
Provided by IHS under license with NEMA
No reproduction or networking permitted without license from IHS
Not for Resale

MW 5-C
POLYESTER FILM INSULATED ROUND COPPER MAGNET WIRE THERMAL CLASS 155

INSULATING MATERIAL The coating is based on polyester resins (1.4.2).

THERMAL CLASS 155 as defined in Part 1, Clause 1.8, and when tested in accordance with Part 3, Clause 3.58.1.

GENERAL REQUIREMENTS See Part 1.

Properties	Procedure, Part 3, Clause	Requirement
DIMENSIONS	3.2.1.1	Single and Heavy 25–50 AWG in accordance with Table 1-1
ADHERENCE AND FLEXIBILITY	3.3.1	No cracks visible in the film coating
ELONGATION	3.4	Not less than value in Table 3.4.2
HEAT SHOCK	3.5	No cracks visible in the film coating after conditioning at 175°C
SPRINGBACK	3.7.1	25–30 AWG Not greater than the value in Table 3.7.1
DIELECTRIC BREAKDOWN	3.8.3 3.8.7	25–37 AWG Not less than the value in Table 3.8.3.2 38–50 AWG Not less than the value in Table 3.8.7.3
CONTINUITY	3.9.2 3.9.3	25–44 AWG Max number of discontinuities in accordance with Table 3.9.2.1 45–50 AWG Max number of discontinuities in accordance with Table 3.9.3
PERIODIC CONFORMANCE TESTS		
THERMOPLASTIC FLOW	3.50	Median not less than 250°C
SOLUBILITY	3.51	Specimens immersed in xylene shall not soften sufficiently to expose the bare conductor
DIELECTRIC BREAKDOWN AT RATED TEMPERATURE	3.52	Average not less than 75% of the value in Table 3.8.3.2
SCRAPE RESISTANCE	3.59	Lowest "grams-to-fail" load for any one of the three tests and the average of the three tests shall not be less than the values in Table 3.59.1

© Copyright 2005 by the National Electrical Manufacturers Association.

Copyright National Electrical Manufacturers Association
Provided by IHS under license with NEMA
No reproduction or networking permitted without license from IHS
Not for Resale

MW 6-C
POLYAMIDE FILM INSULATED ROUND COPPER MAGNET WIRE THERMAL CLASS 105

INSULATING MATERIAL The coating is based on polyamide resins (1.4.2).

THERMAL CLASS 105 as defined in Part 1, Clause 1.8, and when tested in accordance with Part 3, Clause 3.58.1.

GENERAL REQUIREMENTS See Part 1.

<table>
<tr><th>Properties</th><th>Procedure, Part 3, Clause</th><th>Requirement</th></tr>
<tr><td>DIMENSIONS</td><td>3.2.1.1</td><td>Single and Heavy 14–44 AWG in accordance with Table 1-1</td></tr>
<tr><td>ADHERENCE AND FLEXIBILITY</td><td>3.3.1</td><td>No cracks visible in the film coating</td></tr>
<tr><td>ELONGATION</td><td>3.4</td><td>Not less than value in Table 3.4.2</td></tr>
<tr><td>HEAT SHOCK</td><td>3.5</td><td>No cracks visible in the film coating after conditioning at 175°C</td></tr>
<tr><td>SPRINGBACK</td><td>3.7.1</td><td>Not greater than the value in Table 3.7.1</td></tr>
<tr><td>DIELECTRIC BREAKDOWN</td><td>3.8.3
3.8.7</td><td>14–37 AWG Not less than the value in Table 3.8.3.2
38–44 AWG Not less than the value in Table 3.8.7.3</td></tr>
<tr><td>CONTINUITY</td><td>3.9.2</td><td>14–44 AWG Max number of discontinuities in accordance with Table 3.9.2.1</td></tr>
<tr><td>SOLDERABILITY</td><td>3.13</td><td>Covered with continuous film of solder after immersion within the time and at the temperature specified:
<table>
<tr><th>AWG Size</th><th>Temperature</th><th>Single and Heavy</th></tr>
<tr><td>14–19</td><td>430ºC</td><td>10 seconds</td></tr>
<tr><td>20–23</td><td>430ºC</td><td>8 seconds</td></tr>
<tr><td>24–29</td><td>360ºC</td><td>6 seconds</td></tr>
<tr><td>30–36</td><td>360ºC</td><td>5 seconds</td></tr>
<tr><td>37–44</td><td>360ºC</td><td>4 seconds</td></tr>
</table></td></tr>
<tr><td colspan="3">PERIODIC CONFORMANCE TESTS</td></tr>
<tr><td>THERMOPLASTIC FLOW</td><td>3.50</td><td>Median not less than 170°C</td></tr>
<tr><td>SOLUBILITY</td><td>3.51</td><td>Specimens immersed in xylene shall not soften sufficiently to expose the bare conductor</td></tr>
<tr><td>DIELECTRIC BREAKDOWN AT RATED TEMPERATURE</td><td>3.52</td><td>Average not less than 75% of the value in Table 3.8.3.2</td></tr>
</table>

© Copyright 2005 by the National Electrical Manufacturers Association.

Copyright National Electrical Manufacturers Association
Provided by IHS under license with NEMA
No reproduction or networking permitted without license from IHS
Not for Resale

MW 9-C
EPOXY FILM INSULATED ROUND COPPER MAGNET WIRE THERMAL CLASS 130

INSULATING MATERIAL The coating is based on epoxy resins (1.4.2).

THERMAL CLASS 130 as defined in Part 1, Clause 1.8, and when tested in accordance with Part 3, Clause 3.58.1.

GENERAL REQUIREMENTS See Part 1.

Properties	Procedure, Part 3, Clause	Requirement
DIMENSIONS	3.2.1.1	Single 14–50 AWG; Heavy 4–50 AWG; Triple 14–30 AWG In accordance with Table 1-1
ADHERENCE AND FLEXIBILITY	3.3.1	No cracks visible in the film c ti
ELONGATION	3.4	Not less than value in T .2
HEAT SHOCK	3.5	No cracks visib film co g aft onditi ning at 175°C
SPRINGBACK	3.7.1 3.7.2	14–30 G Not at an th alue i .7.1 4–13 AW Not g an 5°
DIELECTRIC BREAKDOWN	3.8.2 3.8 3.8	ot less n t value in Table 3.8.2 -37 G t less th alue in Table 3.8.3.2 50 A na e value in Table 3.8.7.3
CONTINUITY	9.2 .3	4– AW Max mber of discontinuities in accordance with Table 3.9.2.1 5 Max number of discontinuities in accordance with Table 3.9.3
		RI C CONFORMANCE TESTS
THERMOPLASTIC FLO	50	Median not less than 170°C
SOLUBILITY	3.	Specimens immersed in xylene shall not soften sufficiently to expose the bare conductor
DIELECTRIC BREAKDOWN AT RATED TEMPERATURE	3.52	Average not less than 75% of the value in Table 3.8.3.2
TRANSFORMER OIL RESISTANCE	3.54	18 AWG Heavy film insulated wire shall not average not less than 5700 volts
SCRAPE RESISTANCE	3.59	Lowest "grams-to-fail" load for any one of the three tests and the average of the three tests shall not be less than the values in Table 3.59.1

OBSOLETE

© Copyright 2005 by the National Electrical Manufacturers Association.

Copyright National Electrical Manufacturers Association
Provided by IHS under license with NEMA
No reproduction or networking permitted without license from IHS
Not for Resale

MW 14-C
EPOXY FILM INSULATED RECTANGULAR AND SQUARE COPPER MAGNET WIRE THERMAL CLASS 130

INSULATING MATERIALS The coating is based on epoxy resins (1.4.2).

THERMAL CLASS 130 as defined in Part 1, Clause 1.8, and when tested in accordance with Part 3, Clause 3.58.1.

GENERAL REQUIREMENTS See Part 1.

Properties	Procedure, Part 3, Clause	Requirement
DIMENSIONS – Bare Wire Insulation	3.2.2.1 3.2.2.1	Rectangular: Table 1-8, Square: Table 1-11 Rectangular: Table 1-10, Square: Table 1-12
ADHERENCE AND FLEXIBILITY	3.3.3	No cracks visible in the film coating after 30 percent elongation
ELONGATION	3.4	Not less than 32 percent for a thic[illegible] than 0.049 inch (1.25 mm) and greater; 30 percent for [illegible] ss than 0.049 inch (1.25 mm)
HEAT SHOCK	3.5	No cracks in the fi[illegible] 30 pe[illegible] ngation followed by conditioni[illegible] at 150[illegible]
SPRINGBACK	3.7.2	N[illegible] ate[illegible] an 5º
DIELECTRIC BREAKDOWN	3.8[illegible]	[illegible] mum Breakdown Voltage [illegible] ilm [illegible] y three of four electrodes / Fourth electrode In[illegible] ati[illegible] [illegible] vy 1500 500 [illegible] uruple 2500 900
[illegible] ERIODIC CONFORMANCE TESTS		
THERMOPLASTIC FLOW	3.50	Median not less than 170°C, when tested as MW 9-C Heavy Build.
SOLUBILITY	3.51.2	Specimens immersed in xylene or 50/50 xylene/butyl Cellosolve shall not soften sufficiently to expose the bare conductor
DIELECTRIC BREAKDOWN AT RATED TEMPERATURE	3.52	Average not less than 75% of the room temperature dielectric breakdown requirement in Table 3.8.3.2, when tested on MW 9-C Heavy Build
TRANSFORMER OIL RESISTANCE	3.54	18 AWG MW 9-C Heavy film insulated wire shall not average not less than 5700 volts

OBSOLETE

© Copyright 2005 by the National Electrical Manufacturers Association.

Copyright National Electrical Manufacturers Association
Provided by IHS under license with NEMA
No reproduction or networking permitted without license from IHS
Not for Resale

MW 15-A
POLYVINYL ACETAL FILM INSULATED ROUND ALUMINUM MAGNET WIRE THERMAL CLASS 105

INSULATING MATERIALS The coating is based on a blend of polyvinyl acetal and phenolic resins (1.4.2).

THERMAL CLASS 105 as defined in Part 1, Clause 1.8, and when tested in accordance with Part 3, Clause 3.58.1.

GENERAL REQUIREMENTS See Part 1.

Properties	Procedure, Part 3, Clause	Requirement
DIMENSIONS	3.2.1.1	Single 8–24 AWG; Heavy 4–24 AWG in accordance with Table 1-1
ADHERENCE AND FLEXIBILITY	3.3.1	No cracks visible in the film coating
ELONGATION	3.4	Not less than value in Table 3.4.2
HEAT SHOCK	3.5	No cracks visible in the film coating after conditioning at 175°C
DIELECTRIC BREAKDOWN	3.8.2 3.8.3	4–7 AWG Not less than the value in Table 3.8.2 8–24 AWG Not less than the value in Table 3.8.3.2
CONTINUITY	3.9.2	14–24 AWG Max number of discontinuities in accordance with Table 3.9.2.1
PERIODIC CONFORMANCE TESTS		
SOLUBILITY	3.51	Specimens immersed in xylene shall not soften sufficiently to expose the bare conductor
DIELECTRIC BREAKDOWN AT RATED TEMPERATURE	3.52	Average not less than 75% of the value in Table 3.8.3.2
TOLUENE /ETHANOL COMPATIBILITY	3.53	No swelling or blistering in the film coating
TRANSFORMER OIL RESISTANCE	3.54	18 AWG Heavy film insulated wire shall not average not less than 5700 volts
SCRAPE RESISTANCE	3.59	Lowest "grams-to-fail" load for any one of the three tests and the average of the three tests shall not be less than the values in Table 3.59.1

© Copyright 2005 by the National Electrical Manufacturers Association.

Copyright National Electrical Manufacturers Association
Provided by IHS under license with NEMA
No reproduction or networking permitted without license from IHS
Not for Resale

MW 15-C
POLYVINYL ACETAL, FILM INSULATED ROUND COPPER MAGNET WIRE, THERMAL CLASS 105

INSULATING MATERIAL The coating is based on a blend of polyvinyl acetal and phenolic resins (1.4.2).

THERMAL CLASS 105 as defined in Part 1, Clause 1.8, and when tested in accordance with Part 3, Clause 3.58.1.

GENERAL REQUIREMENTS See Part 1.

Properties	Procedure, Part 3, Clause	Requirement
DIMENSIONS	3.2.1.1	Single 8–56 AWG; Heavy 4–50 AWG; Triple 14–30 AWG; Quad 10–36 AWG In accordance with Table 1-1
ADHERENCE AND FLEXIBILITY	3.3.1	No cracks visible in the film coating
ELONGATION	3.4	Not less than value in Table 3.4.2
HEAT SHOCK	3.5	No cracks visible in the film coating after conditioning at 175°C
SPRINGBACK	3.7.1 3.7.2	14–30 AWG Not greater than the value in Table 3.7.1 4–13 AWG Not greater than 5°
DIELECTRIC BREAKDOWN	3.8.2 3.8.3 3.8.7	4–9 AWG Not less than the value in Table 3.8.2 10–37 AWG Not less than the value in Table 3.8.3.2 38–56 AWG Not less than the value in Table 3.8.7.3
CONTINUITY	3.9.2 3.9.3	14–44 AWG Max number of discontinuities in accordance with Table 3.9.2.1 45–56 AWG Max number of discontinuities in accordance with Table 3.9.3
PERIODIC CONFORMANCE TESTS		
THERMOPLASTIC FLOW	3.50	Median not less than 180°C
SOLUBILITY	3.51	Specimens immersed in xylene shall not soften sufficiently to expose the bare conductor
DIELECTRIC BREAKDOWN AT RATED TEMPERATURE	3.52	Average not less than 75% of the value in Table 3.8.3.2
TOLUENE /ETHANOL COMPATIBILITY	3.53	No swelling or blistering in the film coating
TRANSFORMER OIL RESISTANCE	3.54	18 AWG Heavy film insulated wire shall not average not less than 5700 volts
SCRAPE RESISTANCE	3.59	Lowest "grams-to-fail" load for any one of the three tests and the average of the three tests shall not be less than the values in Table 3.59.1

© Copyright 2005 by the National Electrical Manufacturers Association.

Copyright National Electrical Manufacturers Association
Provided by IHS under license with NEMA
No reproduction or networking permitted without license from IHS
Not for Resale

MW 16-C (Single)
POLYIMIDE SINGLE FILM INSULATED ROUND COPPER MAGNET WIRE, THERMAL CLASS 240

INSULATING MATERIAL The coating is based on aromatic polyimide resins (1.4.2).

THERMAL CLASS 240 as defined in Part 1, Clause 1.8, and when tested in accordance with Part 3, Clause 3.58.1.

GENERAL REQUIREMENTS See Part 1.

Properties	Procedure, Part 3, Clause	Requirement
DIMENSIONS	3.2.1.1	14–50 AWG in accordance with Table S (MW 16-C)
ADHERENCE AND FLEXIBILITY	3.3.1	No cracks visible in the film coating
ELONGATION	3.4	Not less than value in Table S (MW 16-C)
HEAT SHOCK	3.5	No cracks visible in film coating after conditioning at 280°C
SPRINGBACK	3.7.1	14–30 AWG Not greater than the value in Table S (MW 16-C)
DIELECTRIC BREAKDOWN	3.8.3 3.8.7	14–37 AWG Not less than the value in Table S (MW 16-C) 38–50 AWG Not less than the value in Table S (MW 16-C)
CONTINUITY	3.9.2 3.9.3	14–44 AWG Max number of discontinuities in accordance with Table 3.9.2.1 45–50 AWG Max number of discontinuities in accordance with Table 3.9.3
DISSIPATION FACTOR	3.10	Not greater than 0.60 percent.
PERIODIC CONFORMANCE TESTS		
THERMOPLASTIC FLOW	3.50	Median not less than 450°C
SOLUBILITY	3.51	Specimens immersed in xylene or 50/50 xylene/butyl Cellosolve shall not soften sufficiently to expose the bare conductor
DIELECTRIC BREAKDOWN AT RATED TEMPERATURE	3.52	Average not less than 75% of value in Table S (MW 16-C)
SCRAPE RESISTANCE	3.59	Lowest “grams-to-fail” load for any one of three tests and the average of the three tests shall not be less than the values in Table S (MW 16-C)

© Copyright 2005 by the National Electrical Manufacturers Association.

Copyright National Electrical Manufacturers Association
Provided by IHS under license with NEMA
No reproduction or networking permitted without license from IHS Not for Resale

Table S (MW 16-C)
POLYIMIDE SINGLE FILM INSULATED ROUND COPPER MAGNET WIRE, THERMAL CLASS 240

AWG Size	Insulation † Minimum Increase in Diameter, Inches	Insulation † Maximum Overall Diameter, Inches	Elongation, Minimum Percent	Scrape Resistance, Grams to Fail Average	Scrape Resistance, Grams to Fail Minimum	Springback, Maximum Degrees per Turn	Dielectric Breakdown, Minimum Voltage	AWG Size
14	0.0016	0.0666	33	545	465	42	3525	14
15	0.0015	0.0594	33	510	430	46	3425	15
16	0.0014	0.0531	33	475	405	50	3325	16
17	0.0014	0.0475	32	445	380	54	3250	17
18	0.0013	0.0424	32	420	355	58	3175	18
19	0.0012	0.0379	31	390	335	62	3075	19
20	0.0012	0.0339	30	370	315	66	3000	20
21	0.0011	0.0303	30	345	295	53	2925	21
22	0.0011	0.0270	29	325	275	58	2850	22
23	0.0010	0.0243	29	300	255	62	2775	23
24	0.0010	0.0217	28	285	245	67	2700	24
25	0.0009	0.0194	28	265	225	72	2625	25
26	0.0009	0.0173	27	245	210	76	2550	26
27	0.0008	0.0156	27	230	200	50	2500	27
28	0.0008	0.0140	26	215	185	55	2425	28
29	0.0007	0.0126	26	200	170	61	2375	29
30	0.0007	0.0112	25	190	160	66	2300	30
31	0.0006	0.0100	24	—	—	—	2075	31
32	0.0006	0.0091	24	—	—	—	1850	32
33	0.0005	0.0081	23	—	—	—	1675	33
34	0.0005	0.0072	22	—	—	—	1500	34
35	0.0004	0.0064	21	—	—	—	1325	35
36	0.0004	0.0058	20	—	—	—	1200	36
37	0.0003	0.0052	20	—	—	—	1075	37
38	0.0003	0.0047	19	—	—	—	500	38
39	0.0002	0.0041	18	—	—	—	500	39
40	0.0002	0.0037	17	—	—	—	425	40
41	0.0002	0.0033	17	—	—	—	425	41
42	0.0002	0.0030	16	—	—	—	375	42
43	0.0002	0.0026	15	—	—	—	325	43
44	0.0001	0.0024	14	—	—	—	300	44
45	0.00010	0.00205	11	—	—	—	275	45
46	0.00010	0.00185	10	—	—	—	250	46
47	0.00010	0.00170	8	—	—	—	225	47
48	0.00010	0.00150	7	—	—	—	190	48
49	0.00010	0.00130	6	—	—	—	170	49
50	0.00010	0.00120	5	—	—	—	150	50

† For bare wire dimensions, see Table 1-1.

--`,,```,,,,````-`-`,,`,,`,`,,`---

© Copyright 2005 by the National Electrical Manufacturers Association.

Copyright National Electrical Manufacturers Association
Provided by IHS under license with NEMA
No reproduction or networking permitted without license from IHS
Not for Resale

MW 16-C (Heavy)
POLYIMIDE HEAVY FILM INSULATED ROUND COPPER MAGNET WIRE, THERMAL CLASS 240

INSULATING MATERIAL The coating is based on aromatic polyimide resins (1.4.2).

THERMAL CLASS 240 as defined in Part 1, Clause 1.8, and when tested in accordance with Part 3, Clause 3.58.1.

GENERAL REQUIREMENTS See Part 1.

Properties	Procedure, Part 3, Clause	Requirement
DIMENSIONS	3.2.1.1	4–50 AWG in accordance with Table H (MW 16-C)
ADHERENCE AND FLEXIBILITY	3.3.1	No cracks visible in the film coating
ELONGATION	3.4	Not less than value in Table H (MW 16-C)
HEAT SHOCK	3.5	No cracks visible in film coating after conditioning at 280°C
SPRINGBACK	3.7.1	14–30 AWG Not greater than the value in Table H (MW 16-C)
DIELECTRIC BREAKDOWN	3.8.3 3.8.7	4–37 AWG Not less than the value in Table H (MW 16-C) 38–50 AWG Not less than the value in Table H (MW 16-C)
CONTINUITY	3.9.2 3.9.3	14–44 AWG Max number of discontinuities in accordance with Table 3.9.2.1 45–50 AWG Max number of discontinuities in accordance with Table 3.9.3
DISSIPATION FACTOR	3.10	Not greater than 0.60 percent.
PERIODIC CONFORMANCE TESTS		
THERMOPLASTIC FLOW	3.50	Median not less than 450°C
SOLUBILITY	3.51	Specimens immersed in xylene or 50/50 xylene/butyl Cellosolve shall not soften sufficiently to expose the bare conductor
DIELECTRIC BREAKDOWN AT RATED TEMPERATURE	3.52	Average not less than 75% of value in Table H (MW 16-C)
REFRIGERANT R22 EXTRACTION	3.55	14–24 AWG Not greater than 0.25% of weight of film insulation
DIELECTRIC BREAKDOWN AFTER R22 CONDITIONING	3.56	14–24 AWG Average not less than the value in Table H (MW 16-C)
SCRAPE RESISTANCE	3.59	Lowest “grams-to-fail” load for any one of three tests and the average of the three tests shall not be less than the values in Table H (MW 16-C)

© Copyright 2005 by the National Electrical Manufacturers Association.

Copyright National Electrical Manufacturers Association
Provided by IHS under license with NEMA
No reproduction or networking permitted without license from IHS Not for Resale

Table H (MW 16-C)
POLYIMIDE HEAVY FILM INSULATED ROUND COPPER MAGNET WIRE, THERMAL CLASS 240

AWG Size	Insulation † Minimum Increase in Diameter, Inches	Insulation † Maximum Overall Diameter, Inches	Elongation, Minimum Percent	Scrape Resistance, Grams to Fail Average	Scrape Resistance, Grams to Fail Minimum	Springback, Maximum Degrees per Turn	Dielectric Breakdown, Minimum Voltage	AWG Size
4	0.0037	0.2098	38	—	—	—	3700	4
5	0.0036	0.1872	37	—	—	—	3600	5
6	0.0035	0.1671	37	—	—	—	3500	6
7	0.0034	0.1491	36	—	—	—	3400	7
8	0.0033	0.1332	36	—	—	—	3300	8
9	0.0032	0.1189	36	—	—	—	3200	9
10	0.0031	0.1061	35	1090	925	—	6200	10
11	0.0030	0.0948	35	1090	925	—	6000	11
12	0.0029	0.0847	34	1090	925	—	5800	12
13	0.0028	0.0757	34	1090	925	—	5600	13
14	0.0032	0.0682	33	1090	925	42	6325	14
15	0.0030	0.0609	33	1015	865	46	6175	15
16	0.0029	0.0545	33	955	810	50	6000	16
17	0.0028	0.0488	32	890	755	54	5850	17
18	0.0026	0.0437	32	835	710	58	5700	18
19	0.0025	0.0391	31	785	665	62	5550	19
20	0.0023	0.0351	30	740	630	66	5400	20
21	0.0022	0.0314	30	695	595	53	5250	21
22	0.0021	0.0281	29	650	550	58	5125	22
23	0.0020	0.0253	29	605	515	62	5000	23
24	0.0019	0.0227	28	565	485	67	4850	24
25	0.0018	0.0203	28	530	450	72	4725	25
26	0.0017	0.0182	27	495	425	76	4600	26
27	0.0016	0.0164	27	460	395	50	4500	27
28	0.0016	0.0147	26	435	370	55	4375	28
29	0.0015	0.0133	26	405	340	61	4250	29
30	0.0014	0.0119	25	380	325	66	4150	30
31	0.0013	0.0108	24	—	—	—	3825	31
32	0.0012	0.0098	24	—	—	—	3525	32
33	0.0011	0.0088	23	—	—	—	3250	33
34	0.0010	0.0078	22	—	—	—	2975	34
35	0.0009	0.0070	21	—	—	—	2750	35
36	0.0008	0.0063	20	—	—	—	2525	36
37	0.0008	0.0057	20	—	—	—	2325	37
38	0.0007	0.0051	19	—	—	—	950	38
39	0.0006	0.0045	18	—	—	—	900	39
40	0.0006	0.0040	17	—	—	—	850	40
41	0.0005	0.0036	17	—	—	—	700	41
42	0.0004	0.0032	16	—	—	—	700	42
43	0.0004	0.0029	15	—	—	—	650	43
44	0.0004	0.0027	14	—	—	—	600	44
45	0.0003	0.0023	11	—	—	—	550	45
46	0.0003	0.0021	10	—	—	—	475	46
47	0.0003	0.0019	8	—	—	—	425	47
48	0.0002	0.0017	7	—	—	—	375	48
49	0.0002	0.0015	6	—	—	—	325	49
50	0.0002	0.0014	5	—	—	—	300	50

† For bare wire dimensions, see Table 1-1.

© Copyright 2005 by the National Electrical Manufacturers Association.

Copyright National Electrical Manufacturers Association
Provided by IHS under license with NEMA
No reproduction or networking permitted without license from IHS
Not for Resale

MW 16-C (Triple)
POLYIMIDE TRIPLE FILM INSULATED ROUND COPPER MAGNET WIRE, THERMAL CLASS 240

INSULATING MATERIAL The coating is based on aromatic polyimide resins (1.4.2).

THERMAL CLASS 240 as defined in Part 1, Clause 1.8, and when tested in accordance with Part 3, Clause 3.58.1.

GENERAL REQUIREMENTS See Part 1.

Properties	Procedure, Part 3, Clause	Requirement
DIMENSIONS	3.2.1.1	14–44 AWG in accordance with Table T (MW 16-C)
ADHERENCE AND FLEXIBILITY	3.3.1	No cracks visible in the film coating
ELONGATION	3.4	Not less than value in Table T (MW 16-C)
HEAT SHOCK	3.5	No cracks visible in film coating after conditioning at 280°C
SPRINGBACK	3.7.1	14–30 AWG Not greater than the value in Table T (MW 16-C)
DIELECTRIC BREAKDOWN	3.8.3 3.8.7	14–37 AWG Not less than the value in Table T (MW 16-C) 38–44 AWG Not less than the value in Table T (MW 16-C)
CONTINUITY	3.9.2	14–44 AWG Max number of discontinuities in accordance with Table 3.9.2.1
DISSIPATION FACTOR	3.10	Not greater than 0.60 percent.
PERIODIC CONFORMANCE TESTS		
THERMOPLASTIC FLOW	3.50	Median not less than 450°C
SOLUBILITY	3.51	Specimens immersed in xylene or 50/50 xylene/butyl Cellosolve shall not soften sufficiently to expose the bare conductor
DIELECTRIC BREAKDOWN AT RATED TEMPERATURE	3.52	Average not less than 75% of value in T (MW 16-C)
REFRIGERANT R22 EXTRACTION	3.55	14–24 AWG Not greater than 0.25% of weight of film insulation
DIELECTRIC BREAKDOWN AFTER R22 CONDITIONING	3.56	14–24 AWG Average not less than the value in Table T (MW 16-C)
SCRAPE RESISTANCE	3.59	Lowest “grams-to-fail” load for any one of three tests and the average of the three tests shall not be less than the values in Table T (MW 16-C)

--`,,```,,© Copyright 2005 by the National Electrical Manufacturers Association.

Copyright National Electrical Manufacturers Association
Provided by IHS under license with NEMA
No reproduction or networking permitted without license from IHS Not for Resale

Table T (MW 16-C)
POLYIMIDE TRIPLE FILM INSULATED ROUND COPPER MAGNET WIRE, THERMAL CLASS 240

AWG Size	Insulation †		Elongation, Minimum Percent	Scrape Resistance, Grams to Fail		Springback, Maximum Degrees per Turn	Dielectric Breakdown, Minimum Voltage	AWG Size
	Minimum Increase in Diameter, Inches	Maximum Overall Diameter, Inches		Average	Minimum			
14	0.0048	0.0700	33	1360	1150	46	8450	14
15	0.0045	0.0627	33	1270	1080	49	8225	15
16	0.0043	0.0562	33	1190	1010	53	8000	16
17	0.0041	0.0504	32	1115	945	58	7800	17
18	0.0039	0.0452	32	1045	890	62	7600	18
19	0.0037	0.0406	31	980	830	66	7400	19
20	0.0035	0.0364	30	920	785	70	7200	20
21	0.0033	0.0326	30	865	735	55	7025	21
22	0.0032	0.0293	29	810	690	60	6850	22
23	0.0030	0.0264	29	755	645	64	6675	23
24	0.0029	0.0238	28	710	605	69	6500	24
25	0.0027	0.0214	28	665	565	74	6325	25
26	0.0026	0.0193	27	620	530	80	6150	26
27	0.0024	0.0173	27	575	490	55	6000	27
28	0.0023	0.0156	26	540	460	60	5850	28
29	0.0022	0.0142	26	505	425	65	5700	29
30	0.0021	0.0128	25	470	395	70	5550	30
31	0.0017	0.0114	24	—	—	—	4600	31
32	0.0016	0.0103	24	—	—	—	4275	32
33	0.0014	0.0092	23	—	—	—	3950	33
34	0.0013	0.0082	22	—	—	—	3675	34
35	0.0012	0.0074	21	—	—	—	3425	35
36	0.0011	0.0067	20	—	—	—	3175	36
37	0.0010	0.0060	20	—	—	—	2950	37
38	0.0009	0.0054	19	—	—	—	1400	38
39	0.0008	0.0048	18	—	—	—	1300	39
40	0.0008	0.0043	17	—	—	—	1200	40
41	0.0007	0.0039	17	—	—	—	1100	41
42	0.0007	0.0035	16	—	—	—	1025	42
43	0.0006	0.0032	15	—	—	—	950	43
44	0.0006	0.0029	14	—	—	—	875	44

† For bare wire dimensions, see Table 1-1.

© Copyright 2005 by the National Electrical Manufacturers Association.

Copyright National Electrical Manufacturers Association
Provided by IHS under license with NEMA
No reproduction or networking permitted without license from IHS
Not for Resale

MW 16-C (Quadruple)
POLYIMDE QUADRUPLE FILM INSULATED ROUND COPPER MAGNET WIRE, THERMAL CLASS 240

INSULATING MATERIAL The coating is based on aromatic polyimide resins (1.4.2).

THERMAL CLASS 240 as defined in Part 1, Clause 1.8, and when tested in accordance with Part 3, Clause 3.58.1.

GENERAL REQUIREMENTS See Part 1.

Properties	Procedure, Part 3, Clause	Requirement
DIMENSIONS	3.2.1.1	See Table Q (MW 16-C)
ADHERENCE AND FLEXIBILITY	3.3.1	No cracks visible in the film coating
ELONGATION	3.4	Not less than value in Table Q (MW 16-C)
HEAT SHOCK	3.5	No cracks visible in the film coating after conditioning at 280°C
SPRINGBACK	3.7.1	Not greater than the value in Table Q (MW 16-C)
DIELECTRIC BREAKDOWN	3.8.3	Not less than the value in Table Q (MW 16-C)
CONTINUITY	3.9.2	The number of discontinuities shall not exceed 3
DISSIPATION FACTOR	3.10	Not greater than 0.60 percent
PERIODIC CONFORMANCE TESTS		
THERMOPLASTIC FLOW	3.50	Median not less than 450°C
SOLUBILITY	3.51	Specimens immersed in xylene or 50/50 xylene/butyl Cellosolve shall not soften sufficiently to expose the bare conductor
DIELECTRIC BREAKDOWN AT RATED TEMPERATURE	3.52	Average not less than 75% of the value in Table Q (MW 16-C)
REFRIGERANT R22 EXTRACTION	3.55	14–24 AWG Not greater than 0.25% of weight of film insulation
DIELECTRIC BREAKDOWN AFTER R22 CONDITIONING	3.56	14–24 AWG Average not less than the value in Table Q (MW 16-C)
SCRAPE RESISTANCE	3.59	Lowest "grams-to-fail" load for any one of the three tests and the average of the three tests shall not be less than the values in Table Q (MW 16-C)

© Copyright 2005 by the National Electrical Manufacturers Association.

Copyright National Electrical Manufacturers Association
Provided by IHS under license with NEMA
No reproduction or networking permitted without license from IHS
Not for Resale

Table Q (MW 16-C)
POLYIMIDE QUADRUPLE FILM INSULATED ROUND COPPER MAGNET WIRE, THERMAL CLASS 240

AWG Size	Insulation † Minimum Increase in Diameter, Inches	Insulation † Maximum Overall Diameter, Inches	Elongation, Minimum Percent	Scrape Resistance, Grams to Fail Average	Scrape Resistance, Grams to Fail Minimum	Springback, Maximum Degrees per Turn	Dielectric Breakdown Minimum Voltage	AWG Size
14	.0049	.0709	33	1390	1185	46	8680	14
15	.0048	.0638	33	1350	1150	49	8640	15
16	.0046	.0572	33	1275	1090	53	8395	16
17	.0045	.0515	32	1225	1045	58	8325	17
18	.0044	.0464	32	1115	955	62	8250	18
19	.0042	.0418	31	1060	905	66	7980	19
20	.0040	.0376	30	990	845	70	7700	20
21	.0039	.0339	30	945	810	55	7605	21
22	.0037	.0305	29	870	745	60	7310	22
23	.0036	.0277	29	805	690	64	7200	23
24	.0035	.0250	28	745	635	69	7090	24
25	.0034	.0226	28	710	605	74	6970	25
26	.0032	.0204	27	655	570	80	6640	26
27	.0030	.0184	27	635	545	55	6300	27
28	.0029	.0165	26	585	500	60	6160	28
29	.0028	.0151	26	550	470	65	6020	29
30	.0027	.0136	25	500	425	70	5870	30

† For bare wire dimensions, see Table 1-1.

© Copyright 2005 by the National Electrical Manufacturers Association.

Copyright National Electrical Manufacturers Association
Provided by IHS under license with NEMA
No reproduction or networking permitted without license from IHS
Not for Resale

MW 17-C
POLYVINYL ACETAL OVERCOATED WITH POLYAMIDE, FILM INSULATED ROUND COPPER MAGNET WIRE THERMAL CLASS 105

INSULATING MATERIAL The conductor shall be coated with a dual film. The underlying coating is based on a blend of polyvinyl acetal and phenolic resins (1.4.2). The superimposed coating is based on polyamide resins (1.4.2).

THERMAL CLASS 105 as defined in Part 1, Clause 1.8, and when tested in accordance with Part 3, Clause 3.58.1.

GENERAL REQUIREMENTS See Part 1.

Properties	Procedure, Part 3, Clause	Requirement
DIMENSIONS	3.2.1.1	Single and Heavy 14–44 AWG in accordance with Table 1-1
ADHERENCE AND FLEXIBILITY	3.3.1	No cracks visible in the film coating
ELONGATION	3.4	Not less than value in Table 3.4.2
HEAT SHOCK	3.5	No cracks visible in the film coating after conditioning at 175°C
SPRINGBACK	3.7.1	14–30 AWG Not greater than the value in Table 3.7.1
DIELECTRIC BREAKDOWN	3.8.3 3.8.7	14–37 AWG Not less than the value in Table 3.8.3.2 38–44 AWG Not less than the value in Table 3.8.7.3
CONTINUITY	3.9.2	14–44 AWG Max number of discontinuities in accordance with Table 3.9.2.1
PERIODIC CONFORMANCE TESTS		
THERMOPLASTIC FLOW	3.50	Median not less than 180°C
SOLUBILITY	3.51	Specimens immersed in xylene shall not soften sufficiently to expose the bare conductor
DIELECTRIC BREAKDOWN AT RATED TEMPERATURE	3.52	Average not less than 75% of the value in Table 3.8.3.2
TOLUENE /ETHANOL COMPATIBILITY	3.53	No swelling or blistering in the film coating
SCRAPE RESISTANCE	3.59	Lowest "grams-to-fail" load for any one of the three tests and the average of the three tests shall not be less than the values in Table 3.59.1

© Copyright 2005 by the National Electrical Manufacturers Association.

Copyright National Electrical Manufacturers Association
Provided by IHS under license with NEMA
No reproduction or networking permitted without license from IHS Not for Resale

MW 18-A
POLYVINYL ACETAL, FILM INSULATED RECTANGULAR AND SQUARE ALUMINUM MAGNET WIRE THERMAL CLASS 105

INSULATING MATERIALS The coating is based on a blend of polyvinyl acetal and phenolic resins (1.4.2).

THERMAL CLASS 105 as defined in Part 1, Clause 1.8, and when tested in accordance with Part 3, Clause 3.58.1.

GENERAL REQUIREMENTS See Part 1.

<table>
<tr><th>Properties</th><th>Procedure, Part 3, Clause</th><th>Requirement</th></tr>
<tr><td>DIMENSIONS – Bare Wire
Insulation</td><td>3.2.2.1
3.2.2.1</td><td>Rectangular and square in accordance with Tables 1–8 and 1-11
Rectangular and square in accordance with Tables 1-10 and 1-12</td></tr>
<tr><td>ADHERENCE AND FLEXIBILITY</td><td>3.3.3</td><td>No cracks visible in the film coating after 15 percent elongation</td></tr>
<tr><td>ELONGATION</td><td>3.4</td><td>Not less than 15 percent</td></tr>
<tr><td>HEAT SHOCK</td><td>3.5</td><td>No cracks visible in the film coating after 10 percent elongation followed by conditioning at 150 ± 3°C</td></tr>
<tr><td>DIELECTRIC BREAKDOWN</td><td>3.8.2</td><td>
<table>
<tr><th rowspan="2">Film insulation</th><th colspan="2">Minimum Breakdown Voltage</th></tr>
<tr><th>Any three of four electrodes</th><th>Fourth electrode</th></tr>
<tr><td>Heavy</td><td>1500</td><td>500</td></tr>
<tr><td>Quadruple</td><td>2500</td><td>900</td></tr>
</table>
</td></tr>
<tr><td></td><td></td><td></td></tr>
<tr><td colspan="3">PERIODIC CONFORMANCE TESTS</td></tr>
<tr><td>SOLUBILITY</td><td>3.51</td><td>Specimens immersed in xylene shall not soften sufficiently to expose the bare conductor</td></tr>
<tr><td>DIELECTRIC BREAKDOWN AT RATED TEMPERATURE</td><td>3.52</td><td>Average not less than 75% of the room temperature dielectric breakdown requirement in Table 3.8.3.2, when tested on MW 15-A Heavy Build</td></tr>
<tr><td>TOLUENE /ETHANOL COMPATIBILITY</td><td>3.53</td><td>No swelling or blistering in the film coating</td></tr>
<tr><td>TRANSFORMER OIL RESISTANCE</td><td>3.54</td><td>18 AWG MW 15-A Heavy Build film insulated wire shall not average not less than 5700 volts</td></tr>
</table>

© Copyright 2005 by the National Electrical Manufacturers Association.

Copyright National Electrical Manufacturers Association
Provided by IHS under license with NEMA
No reproduction or networking permitted without license from IHS
Not for Resale

MW 18-C
POLYVINYL ACETAL, FILM INSULATED RECTANGULAR AND SQUARE COPPER MAGNET WIRE THERMAL CLASS 105

INSULATING MATERIALS The coating is based on a blend of polyvinyl acetal and phenolic resins (1.4.2).

THERMAL CLASS 105 as defined in Part 1, Clause 1.8, and when tested in accordance with Part 3, Clause 3.58.1.

GENERAL REQUIREMENTS See Part 1.

Properties	Procedure, Part 3, Clause	Requirement
DIMENSIONS – Bare Wire	3.2.2.1	Rectangular and square in accordance with Tables 1–8 and 1-11
Insulation	3.2.2.1	Rectangular and square in accordance with Tables 1-10 and 1-12
ADHERENCE AND FLEXIBILITY	3.3.3	No cracks visible in the film coating after 30 percent elongation
ELONGATION	3.4	Not less than 32 percent for a thickness 0.049 inch (1.25 mm) and greater or 30 percent for a thickness less than 0.049 inch (1.25 mm)
HEAT SHOCK	3.5	No cracks visible in the film coating after 30 percent elongation followed by conditioning at 150 ± 3°C
SPRINGBACK	3.7.2	Not greater than 5°
DIELECTRIC BREAKDOWN	3.8.2	Minimum Breakdown Voltage Film Insulation: Heavy — Any three of four electrodes: 1500 — Fourth electrode: 500 Film Insulation: Quadruple — Any three of four electrodes: 2500 — Fourth electrode: 900
PERIODIC CONFORMANCE TESTS		
THERMOPLASTIC FLOW	3.50	Median not less than 180ºC, when tested as MW 15-C Heavy Build.
SOLUBILITY	3.51	Specimens immersed in xylene shall not soften sufficiently to expose the bare conductor
DIELECTRIC BREAKDOWN AT RATED TEMPERATURE	3.52	Average not less than 75% of the room temperature dielectric breakdown requirement in Table 3.8.3.2, when tested on MW 15-C Heavy Build
TOLUENE /ETHANOL COMPATIBILITY	3.53	No swelling or blistering in the film coating
TRANSFORMER OIL RESISTANCE	3.54	18 AWG MW 15-C Heavy film insulated wire shall not average less than 5700 volts

© Copyright 2005 by the National Electrical Manufacturers Association.

Copyright National Electrical Manufacturers Association
Provided by IHS under license with NEMA
No reproduction or networking permitted without license from IHS
Not for Resale

MW 19-C
POLYVINYL ACETAL WITH SELF-BONDING OVERCOAT, FILM INSULATED ROUND COPPER MAGNET WIRE THERMAL CLASS 105

INSULATING MATERIAL The conductor shall be coated with a dual film. The underlying coating is based on a blend of polyvinyl acetal and phenolic resins (1.4.2). The superimposed coating is based on resins that are self-bonding in character.

THERMAL CLASS 105 as defined in Part 1, Clause 1.8, and when tested in accordance with Part 3, Clause 3.58.1.

GENERAL REQUIREMENTS See Part 1.

Properties	Procedure, Part 3, Clause	Requirement
DIMENSIONS	3.2.1.1	Type 1 and Type 2: 14–44 AWG, Type 3: 14–30 AWG In accordance with Table 1-3
ADHERENCE AND FLEXIBILITY	3.3.1	No cracks visible in the film coating
ELONGATION	3.4	Not less than value in Table 3.4.2
HEAT SHOCK	3.5	No cracks visible in the film coating after conditioning at 175°C
SPRINGBACK	3.7.1	Not greater than the value in Table 3.7.1
DIELECTRIC BREAKDOWN	3.8.3 3.8.7	14–37 AWG Not less than the value in Table 3.8.3.2 38–44 AWG Not less than the value in Table 3.8.7.3
CONTINUITY	3.9.2	Max number of discontinuities in accordance with Table 3.9.2.1
PERIODIC CONFORMANCE TESTS		
THERMOPLASTIC FLOW	3.50	Median not less than 180°C
DIELECTRIC BREAKDOWN AT RATED TEMPERATURE	3.52	Average not less than 75% of the value in Table 3.8.3.2
TOLUENE /ETHANOL COMPATIBILITY	3.53	No swelling or blistering in the film coating
BOND – ROOM TEMPERATURE	3.57.3	No separation of turns in Type 2 specimens of 18, 26 and 36 AWG

© Copyright 2005 by the National Electrical Manufacturers Association.

Copyright National Electrical Manufacturers Association
Provided by IHS under license with NEMA
No reproduction or networking permitted without license from IHS
Not for Resale

MW 20-C
POLYIMIDE, FILM INSULATED RECTANGULAR AND SQUARE COPPER MAGNET WIRE THERMAL CLASS 240

INSULATING MATERIALS The coating is based on aromatic polyimide resins (1.4.2).

THERMAL CLASS 240 as defined in Part 1, Clause 1.8, and when tested in accordance with Part 3, Clause 3.58.1.

GENERAL REQUIREMENTS See Part 1.

<table>
<tr><th>Properties</th><th>Procedure, Part 3, Clause</th><th>Requirement</th></tr>
<tr><td>DIMENSIONS – Bare Wire
Insulation</td><td>3.2.2.1
3.2.2.1</td><td>Rectangular and square in accordance with Tables 1–8 and 1-11
Rectangular and square in accordance with Tables 1-10 and 1-12</td></tr>
<tr><td>ADHERENCE AND FLEXIBILITY</td><td>3.3.3</td><td>No cracks visible in the film coating after 30 percent elongation</td></tr>
<tr><td>ELONGATION</td><td>3.4</td><td>Not less than 32 percent for a thickness 0.049 inch (1.25 mm) and greater or 30 percent for a thickness less than 0.049 inch (1.25 mm)</td></tr>
<tr><td>HEAT SHOCK</td><td>3.5</td><td>No cracks in the film coating after 15 percent elongation followed by conditioning at 280°C ± 3ºC</td></tr>
<tr><td>SPRINGBACK</td><td>3.7.2</td><td>Not greater than 5°</td></tr>
<tr><td>DIELECTRIC BREAKDOWN</td><td>3.8.2</td><td>
<table>
<tr><th rowspan="2">Film Insulation</th><th colspan="2">Minimum Breakdown Voltage</th></tr>
<tr><th>Any three of four electrodes</th><th>Fourth electrode</th></tr>
<tr><td>Heavy</td><td>1500</td><td>500</td></tr>
<tr><td>Quadruple</td><td>2500</td><td>900</td></tr>
</table>
</td></tr>
<tr><td>DISSIPATION FACTOR</td><td>3.10</td><td>Not greater than 0.60 percent.</td></tr>
<tr><td colspan="3">PERIODIC CONFORMANCE TESTS</td></tr>
<tr><td>THERMOPLASTIC FLOW</td><td>3.50</td><td>Median not less than 450°C, when tested on MW 16-C Heavy Build.</td></tr>
<tr><td>SOLUBILITY</td><td>3.51</td><td>Specimens immersed in xylene and 50/50 xylene/butyl Cellosolve shall not soften sufficiently to expose the bare conductor</td></tr>
<tr><td>DIELECTRIC BREAKDOWN AT RATED TEMPERATURE</td><td>3.52</td><td>Average not less than 75% of the room temperature dielectric breakdown requirement in Table H (MW 16-C), when tested on round wire</td></tr>
</table>

© Copyright 2005 by the National Electrical Manufacturers Association.

Copyright National Electrical Manufacturers Association
Provided by IHS under license with NEMA
No reproduction or networking permitted without license from IHS
Not for Resale

MW 24-A
POLYESTER (AMIDE) (IMIDE) OVERCOATED WITH POLYAMIDE FILM INSULATED ROUND ALUMINUM MAGNET WIRE THERMAL CLASS 155

INSULATING MATERIAL The conductor shall be coated with a dual film. The underlying coating is based on polyester (amide) (imide) resins (1.4.2). The superimposed coating is based on polyamide resins (1.4.2).

THERMAL CLASS 155 as defined in Part 1, Clause 1.8, and when tested in accordance with Part 3, Clause 3.58.1.

GENERAL REQUIREMENTS See Part 1.

Properties	Procedure, Part 3, Clause	Requirement
DIMENSIONS	3.2.1.1	Single 14–24 AWG; Heavy 10–24 AWG in accordance with Table 1-1
ADHERENCE AND FLEXIBILITY	3.3.1	No cracks visible in the film coating
ELONGATION	3.4	Not less than value in Table 3.4.2
HEAT SHOCK	3.5	No cracks visible in the film coating after conditioning at 175°C
DIELECTRIC BREAKDOWN	3.8.3	Not less than the value in Table 3.8.3.2
CONTINUITY	3.9.2	Max number of discontinuities in accordance with Table 3.9.2.1
PERIODIC CONFORMANCE TESTS		
SOLUBILITY	3.51	Specimens immersed in xylene and 50/50 xylene/butyl Cellosolve shall not soften sufficiently to expose the bare conductor
DIELECTRIC BREAKDOWN AT RATED TEMPERATURE	3.52	Average not less than 75% of the value in Table 3.8.3.2
SCRAPE RESISTANCE	3.59	Lowest "grams-to-fail" load for any one of the three tests and the average of the three tests shall not be less than the values in Table 3.59.1

© Copyright 2005 by the National Electrical Manufacturers Association.

Copyright National Electrical Manufacturers Association
Provided by IHS under license with NEMA
No reproduction or networking permitted without license from IHS
Not for Resale

MW 24-C
POLYESTER (AMIDE) (IMIDE) OVERCOATED WITH POLYAMIDE FILM INSULATED ROUND COPPER MAGNET WIRE THERMAL CLASS 155

INSULATING MATERIAL The conductor shall be coated with a dual film. The underlying coating is based on polyester (amide) (imide) resins (1.4.2). The superimposed coating is based on polyamide resins (1.4.2).

THERMAL CLASS 155 as defined in Part 1, Clause 1.8, and when tested in accordance with Part 3, Clause 3.58.1.

GENERAL REQUIREMENTS See Part 1.

Properties	Procedure, Part 3, Clause	Requirement
DIMENSIONS	3.2.1.1	Single 14–30 AWG; Heavy 10–30 AWG; Triple 14–30 AWG In accordance with Table 1-1
ADHERENCE AND FLEXIBILITY	3.3.1	No cracks visible in the film coating
ELONGATION	3.4	Not less than value in Table 3.4.2
HEAT SHOCK	3.5	No cracks visible in the film coating after conditioning at 175°C
SPRINGBACK	3.7.1 3.7.2	14–30 AWG Not greater than the value in Table 3.7.1 10–13 AWG Not greater than 5°
DIELECTRIC BREAKDOWN	3.8.3	Not less than the value in Table 3.8.3.2
CONTINUITY	3.9.2	14–30 AWG Max number of discontinuities in accordance with Table 3.9.2.1
PERIODIC CONFORMANCE TESTS		
THERMOPLASTIC FLOW	3.50	Median not less than 200°C
SOLUBILITY	3.51	Specimens immersed in xylene and 50/50 xylene/butyl Cellosolve shall not soften sufficiently to expose the bare conductor
DIELECTRIC BREAKDOWN AT RATED TEMPERATURE	3.52	Average not less than 75% of the value in Table 3.8.3.2
SCRAPE RESISTANCE	3.59	Lowest "grams-to-fail" load for any one of the three tests and the average of the three tests shall not be less than the values in Table 3.59.1

© Copyright 2005 by the National Electrical Manufacturers Association.

Copyright National Electrical Manufacturers Association
Provided by IHS under license with NEMA
No reproduction or networking permitted without license from IHS
Not for Resale

MW 26-C
POLYESTER (IMIDE), FILM INSULATED ROUND COPPER MAGNET WIRE FOR SOLDERABLE APPLICATIONS THERMAL CLASS 155

INSULATING MATERIAL The coating is based on polyester (imide) resins (1.4.2).

THERMAL CLASS 155 as defined in Part 1, Clause 1.8, and when tested in accordance with Part 3, Clause 3.58.1.

GENERAL REQUIREMENTS See Part 1.

Properties	Procedure, Part 3, Clause	Requirement
DIMENSIONS	3.2.1.1	Single 25–56 AWG; Heavy 25–50 AWG in accordance with Table 1-1
ADHERENCE AND FLEXIBILITY	3.3.1	No cracks visible in the film coating
ELONGATION	3.4	Not less than value in Table 3.4.2
HEAT SHOCK	3.5	No cracks visible in the film coating after conditioning at 175°C
SPRINGBACK	3.7.1	25–30 AWG Not greater than the value in Table 3.7.1
DIELECTRIC BREAKDOWN	3.8.3 3.8.7	25–37 AWG Not less than the value in Table 3.8.3.2 38–50 AWG Not less than the value in Table 3.8.7.3
CONTINUITY	3.9.2 3.9.3	25–44 AWG Max number of discontinuities in accordance with Table 3.9.2.1 45–50 AWG Max number of discontinuities in accordance with Table 3.9.3
SOLDERABILITY	3.13	Covered with continuous film of solder after immersion within the time specified at 470ºC. AWG Size / Single and Heavy 25–29: 6 seconds 30–36: 5 seconds 37–46: 4 seconds 47–56: 3 seconds
PERIODIC CONFORMANCE TESTS		
THERMOPLASTIC FLOW	3.50	Median not less than 225°C
SOLUBILITY	3.51	Specimens immersed in xylene shall not soften sufficiently to expose the bare conductor
DIELECTRIC BREAKDOWN AT RATED TEMPERATURE	3.52	Average not less than 75% of the value in Table 3.8.3.2
SCRAPE RESISTANCE	3.59	Lowest "grams-to-fail" load for any one of the three tests and the average of the three tests shall not be less than the values in Table 3.59.2

© Copyright 2005 by the National Electrical Manufacturers Association.

Copyright National Electrical Manufacturers Association
Provided by IHS under license with NEMA
No reproduction or networking permitted without license from IHS
Not for Resale

MW 27-C
POLYESTER (IMIDE) OVERCOATED WITH POLYAMIDE FILM INSULATED ROUND COPPER MAGNET WIRE FOR SOLDERABLE APPLICATIONS THERMAL CLASS 155

INSULATING MATERIAL The conductor shall be coated with a dual film. The underlying coating is based on polyester (imide) resins (1.4.2). The superimposed coating is based on polyamide resins (1.4.2).

THERMAL CLASS 155 as defined in Part 1, Clause 1.8, and when tested in accordance with Part 3, Clause 3.58.1.

GENERAL REQUIREMENTS See Part 1.

Properties	Procedure, Part 3, Clause	Requirement
DIMENSIONS	3.2.1.1	Single and Heavy: 25–44 AWG in accordance with Table 1-1
ADHERENCE AND FLEXIBILITY	3.3.1	No cracks visible in the film coating
ELONGATION	3.4	Not less than value in Table 3.4.2
HEAT SHOCK	3.5	No cracks visible in the film coating after conditioning at 175°C
SPRINGBACK	3.7.1	25–30 AWG Not greater than the value in Table 3.7.1
DIELECTRIC BREAKDOWN	3.8.3 3.8.7	25–37 AWG Not less than the value in Table 3.8.3.2 38–44 AWG Not less than the value in Table 3.8.7.3
CONTINUITY	3.9.2	Max number of discontinuities in accordance with Table 3.9.2.1
SOLDERABILITY	3.13	Covered with continuous film of solder after immersion within the time specified at 470ºC.
PERIODIC CONFORMANCE TESTS		
THERMOPLASTIC FLOW	3.50	Median not less than 200°C
SOLUBILITY	3.51	Specimens immersed in xylene shall not soften sufficiently to expose the bare conductor
DIELECTRIC BREAKDOWN AT RATED TEMPERATURE	3.52	Average not less than 75% of the value in Table 3.8.3.2
SCRAPE RESISTANCE	3.59	Lowest "grams-to-fail" load for any one of the three tests and the average of the three tests shall not be less than the values in Table 3.59.2

AWG Size	Single and Heavy
25–29	6 seconds
30–36	5 seconds
37–44	4 seconds

© Copyright 2005 by the National Electrical Manufacturers Association.

Copyright National Electrical Manufacturers Association
Provided by IHS under license with NEMA
No reproduction or networking permitted without license from IHS
Not for Resale

MW 28-A
POLYURETHANE OVERCOATED WITH POLYAMIDE FILM INSULATED ROUND ALUMINUM MAGNET WIRE FOR SOLDERABLE APPLICATIONS THERMAL CLASS 130

INSULATING MATERIAL The conductor shall be coated with a dual film. The underlying coating is based on polyurethane resins (1.4.2). The superimposed coating is based on polyamide resins (1.4.2).

THERMAL CLASS 130 as defined in Part 1, Clause 1.8, and when tested in accordance with Part 3, Clause 3.58.1.

GENERAL REQUIREMENTS See Part 1.

<table>
<tr><th>Properties</th><th>Procedure, Part 3, Clause</th><th>Requirement</th></tr>
<tr><td>DIMENSIONS</td><td>3.2.1.1</td><td>Single and Heavy: 14–30 AWG in accordance with Table 1-1</td></tr>
<tr><td>ADHERENCE AND FLEXIBILITY</td><td>3.3.1</td><td>No cracks visible in the film coating</td></tr>
<tr><td>ELONGATION</td><td>3.4</td><td>Not less than value in Table 3.4.2</td></tr>
<tr><td>HEAT SHOCK</td><td>3.5</td><td>No cracks visible in film coating after conditioning at 175°C</td></tr>
<tr><td>DIELECTRIC BREAKDOWN</td><td>3.8.3</td><td>Not less than the value in Table 3.8.3.2</td></tr>
<tr><td>CONTINUITY</td><td>3.9.2</td><td>Max number of discontinuities in accordance with Table 3.9.2.1</td></tr>
<tr><td>SOLDERABILITY</td><td>3.13</td><td>Insulation completely removed after immersion within the time and at the temperature specified:
<table>
<tr><th>AWG Size</th><th>Temperature</th><th>Single and Heavy</th></tr>
<tr><td>14–19</td><td>430ºC</td><td>10 seconds</td></tr>
<tr><td>20–23</td><td>430ºC</td><td>8 seconds</td></tr>
<tr><td>24–30</td><td>390ºC</td><td>6 seconds</td></tr>
</table></td></tr>
<tr><td colspan="3">PERIODIC CONFORMANCE TESTS</td></tr>
<tr><td>SOLUBILITY</td><td>3.51</td><td>Specimens immersed in xylene shall not soften sufficiently to expose the bare conductor</td></tr>
<tr><td>DIELECTRIC BREAKDOWN AT RATED TEMPERATURE</td><td>3.52</td><td>Average not less than 75% of value in Table 3.8.3.2</td></tr>
<tr><td>SCRAPE RESISTANCE</td><td>3.59</td><td>Lowest "grams-to-fail" load for any one of the three tests and the average of the three tests shall not be less than the values in Table 3.59.1</td></tr>
</table>

© Copyright 2005 by the National Electrical Manufacturers Association.

Copyright National Electrical Manufacturers Association
Provided by IHS under license with NEMA
No reproduction or networking permitted without license from IHS
Not for Resale

MW 28-C
POLYURETHANE OVERCOATED WITH POLYAMIDE FILM INSULATED ROUND COPPER MAGNET WIRE FOR SOLDERABLE APPLICATIONS THERMAL CLASS 130

INSULATING MATERIAL The conductor shall be coated with a dual film. The underlying coating is based on polyurethane resins (1.4.2). The superimposed coating is based on polyamide resins (1.4.2).

THERMAL CLASS 130 as defined in Part 1, Clause 1.8, and when tested in accordance with Part 3, Clause 3.58.1.

GENERAL REQUIREMENTS See Part 1.

<table>
<tr><th>Properties</th><th>Procedure, Part 3, Clause</th><th>Requirement</th></tr>
<tr><td>DIMENSIONS</td><td>3.2.1.1</td><td>Single: 14–44 AWG, Heavy: 9–44 AWG in accordance with Table 1-1</td></tr>
<tr><td>ADHERENCE AND FLEXIBILITY</td><td>3.3.1</td><td>No cracks visible in the film coating</td></tr>
<tr><td>ELONGATION</td><td>3.4</td><td>Not less than value in Table 3.4.2</td></tr>
<tr><td>HEAT SHOCK</td><td>3.5</td><td>No cracks visible in the film coating after conditioning at 175°C</td></tr>
<tr><td>SPRINGBACK</td><td>3.7.1</td><td>14–30 AWG Not greater than the value in Table 3.7.1</td></tr>
<tr><td>DIELECTRIC BREAKDOWN</td><td>3.8.2
3.8.3
3.8.7</td><td>9 AWG Not less than the value in Table 3.8.2
10–37 AWG Not less than the value in Table 3.8.3.2
38–44 AWG Not less than the value in Table 3.8.7.3</td></tr>
<tr><td>CONTINUITY</td><td>3.9.2</td><td>Max number of discontinuities in accordance with Table 3.9.2.1</td></tr>
<tr><td>SOLDERABILITY</td><td>3.13</td><td>Covered with continuous film of solder after immersion within the time and at temperature specified:
<table>
<tr><th>AWG Size</th><th>Temperature</th><th>Single</th><th>Heavy</th></tr>
<tr><td>9–13</td><td>430ºC</td><td>—</td><td>12 seconds</td></tr>
<tr><td>14–19</td><td>430ºC</td><td>10 seconds</td><td>10 seconds</td></tr>
<tr><td>20–23</td><td>430ºC</td><td>8 seconds</td><td>8 seconds</td></tr>
<tr><td>24–29</td><td>360ºC</td><td>6 seconds</td><td>6 seconds</td></tr>
<tr><td>30–36</td><td>360ºC</td><td>5 seconds</td><td>5 seconds</td></tr>
<tr><td>37–44</td><td>360ºC</td><td>4 seconds</td><td>4 seconds</td></tr>
</table></td></tr>
<tr><td colspan="3">PERIODIC CONFORMANCE TESTS</td></tr>
<tr><td>THERMOPLASTIC FLOW</td><td>3.50</td><td>Median not less than 170°C</td></tr>
<tr><td>SOLUBILITY</td><td>3.51</td><td>Specimens immersed in xylene shall not soften sufficiently to expose the bare conductor</td></tr>
<tr><td>DIELECTRIC BREAKDOWN AT RATED TEMPERATURE</td><td>3.52</td><td>Average not less than 75% of the value in Table 3.8.3.2</td></tr>
<tr><td>SCRAPE RESISTANCE</td><td>3.59</td><td>Lowest "grams-to-fail" load for any one of the three tests and the average of the three tests shall not be less than the values in Table 3.59.1</td></tr>
</table>

© Copyright 2005 by the National Electrical Manufacturers Association.

Copyright National Electrical Manufacturers Association
Provided by IHS under license with NEMA
No reproduction or networking permitted without license from IHS Not for Resale

MW 29-C
POLYURETHANE OVERCOATED WITH POLYAMIDE AND SELF-BONDING OVERCOAT FILM INSULATED ROUND COPPER MAGNET WIRE FOR SOLDERABLE APPLICATIONS THERMAL CLASS 105

INSULATING MATERIAL The conductor shall be coated with a multiple film. The underlying coating is based on polyurethane resins (1.4.2). The intermediate coating is based on polyamide resins (1.4.2). The superimposed outer coating is based on resins which are self-bonding in character (1.4.2).

THERMAL CLASS 105 as defined in Part 1, Clause 1.8, and when tested in accordance with Part 3, Clause 3.58.1.

GENERAL REQUIREMENTS See Part 1.

<table>
<tr><th>Properties</th><th>Procedure, Part 3, Clause</th><th>Requirement</th></tr>
<tr><td>DIMENSIONS</td><td>3.2.1.2</td><td>Type 1 and Type 2: 14–44 AWG in accordance with Table 1-3</td></tr>
<tr><td>ADHERENCE AND FLEXIBILITY</td><td>3.3.1</td><td>No cracks visible in the film coating</td></tr>
<tr><td>ELONGATION</td><td>3.4</td><td>Not less than value in Table 3.4.2</td></tr>
<tr><td>HEAT SHOCK</td><td>3.5</td><td>No cracks visible in the film coating after conditioning at 175°C</td></tr>
<tr><td>SPRINGBACK</td><td>3.7.1</td><td>14–30 AWG Not greater than the value in Table 3.7.1</td></tr>
<tr><td>DIELECTRIC BREAKDOWN</td><td>3.8.3
3.8.7</td><td>14–37 AWG Not less than the value in Table 3.8.3.2 (polyamide col.)
38–44 AWG Not less than the value in Table 3.8.7.3 (polyamide col.)</td></tr>
<tr><td>CONTINUITY</td><td>3.9.2</td><td>Max number of discontinuities in accordance with Table 3.9.2.1</td></tr>
<tr><td>SOLDERABILITY</td><td>3.13</td><td>Covered with continuous film of solder after immersion within the time and at the temperature specified:
<table>
<tr><th>AWG Size</th><th>Temperature</th><th>Single and Heavy</th></tr>
<tr><td>14–19</td><td>430ºC</td><td>10 seconds</td></tr>
<tr><td>20–23</td><td>430ºC</td><td>8 seconds</td></tr>
<tr><td>24–29</td><td>390ºC</td><td>6 seconds</td></tr>
<tr><td>30–36</td><td>390ºC</td><td>5 seconds</td></tr>
<tr><td>37–44</td><td>390ºC</td><td>4 seconds</td></tr>
</table></td></tr>
<tr><td colspan="3">PERIODIC CONFORMANCE TESTS</td></tr>
<tr><td>THERMOPLASTIC FLOW</td><td>3.50</td><td>Median not less than 170°C</td></tr>
<tr><td></td><td></td><td></td></tr>
<tr><td>DIELECTRIC BREAKDOWN AT RATED TEMPERATURE</td><td>3.52</td><td>Average not less than 75% of the value in Table 3.8.3.2 (polyamide col.)</td></tr>
<tr><td>BOND–ROOM TEMPERATURE</td><td>3.57</td><td>No separation of turns in Type 2 specimens of 18, 26 and 36 AWG</td></tr>
</table>

--`,,```,,,,````-`-`,,`,,`,`,,`---
© Copyright 2005 by the National Electrical Manufacturers Association.
Copyright National Electrical Manufacturers Association
Provided by IHS under license with NEMA
No reproduction or networking permitted without license from IHS
Not for Resale

MW 30-C
POLYESTER (AMIDE) (IMIDE) FILM INSULATED ROUND COPPER MAGNET WIRE
THERMAL CLASS 180

INSULATING MATERIAL The coating is based on polyester (amide)(imide) resins (1.4.2).

THERMAL CLASS 180 as defined in Part 1, Clause 1.8, and when tested in accordance with Part 3, Clause 3.58.1.

GENERAL REQUIREMENTS See Part 1.

Properties	Procedure, Part 3, Clause	Requirement
DIMENSIONS	3.2.1.1	Single 14–56 AWG; Heavy 4–50 AWG; Triple 14–44 AWG In accordance with Table 1-1
ADHERENCE AND FLEXIBILITY	3.3.1	No cracks visible in the film coating
ELONGATION	3.4	Not less than value in Table 3.4.2
HEAT SHOCK	3.5	No cracks visible in the film coating after conditioning at 200°C
SPRINGBACK	3.7.1 3.7.2	14–30 AWG Not greater than the value in Table 3.7.1 4–13 AWG Not greater than 5°
DIELECTRIC BREAKDOWN	3.8.2 3.8.3 3.8.7	4–9 AWG Not less than the value in Table 3.8.2 10–37 AWG Not less than the value in Table 3.8.3.2 38–56 AWG Not less than the value in Table 3.8.7.3
CONTINUITY	3.9.2 3.9.3	14–44 AWG Max number of discontinuities in accordance with Table 3.9.2.1 45–56 AWG Max number of discontinuities in accordance with Table 3.9.3
PERIODIC CONFORMANCE TESTS		
THERMOPLASTIC FLOW	3.50	Median not less than 300°C
SOLUBILITY	3.51	Specimens immersed in xylene and 50/50 xylene/butyl Cellosolve shall not soften sufficiently to expose the bare conductor
DIELECTRIC BREAKDOWN AT RATED TEMPERATURE	3.52	Average not less than 75% of the value in Table 3.8.3.2
SCRAPE RESISTANCE	3.59	Lowest "grams-to-fail" load for any one of the three tests and the average of the three tests shall not be less than the values in Table 3.59.1

© Copyright 2005 by the National Electrical Manufacturers Association.

Copyright National Electrical Manufacturers Association
Provided by IHS under license with NEMA
No reproduction or networking permitted without license from IHS
Not for Resale

MW 31-C
PAPER COVERED BARE OR FILM INSULATED ROUND COPPER MAGNET WIRE
THERMAL CLASS 90 OR 105

INSULATING MATERIALS The insulating material shall be rope paper or Kraft paper, or both. The paper covering shall be one or more tape layers wrapped firmly, closely, evenly, and continuously around the wire. The use of suitable adhesive material shall be permitted.

THERMAL CLASS 90 unimpregnated or 105 impregnated or in oil, when tested in accordance with Part 3, Clause 3.58.1.

GENERAL REQUIREMENTS See Part 1.

<table>
<tr><th>Properties</th><th>Procedure, Part 3, Clause</th><th>Requirement</th></tr>
<tr><td>DIMENSIONS</td><td>3.2.1.3</td><td>Bare and film insulated wire dimensions in accordance with Table 1-1
The increase in thickness for the paper covering shall be as follows:
Min. thickness increase = 2(Equiv. No. of Layers – 1)(Nom. tape thickness)
Max. thickness increase = 2(Equiv. No. of Layers + 1)(Nom. tape thickness)</td></tr>
<tr><td>ADHERENCE AND FLEXIBILITY</td><td>3.3.2</td><td>No openings sufficient to expose the bare or film insulated conductor, when wound on the following mandrel:
<table>
<tr><th>AWG Size</th><th>Mandrel Wrap Method</th><th>Elongation Method</th></tr>
<tr><td>8 – 13</td><td>5d</td><td>15% (+2, -0)</td></tr>
<tr><td>14 – 22</td><td>4d</td><td>10% (+2, -0)</td></tr>
<tr><td>23 – 32</td><td>3d</td><td>8% (+2, -0)</td></tr>
</table></td></tr>
<tr><td></td><td>3.3.3</td><td>No openings sufficient to expose the bare or film coated wire, following elongation in accordance with 3.3.3.</td></tr>
<tr><td>ELONGATION</td><td>3.4</td><td>Not less than value in Table 3.4.2</td></tr>
<tr><td>SPRINGBACK</td><td>3.7.2</td><td>Not greater than 5º</td></tr>
<tr><td>DIELECTRIC BREAKDOWN</td><td>3.8.4</td><td>
<table>
<tr><th rowspan="2">AWG Size</th><th rowspan="2">Diameter of Mandrel, inches</th><th colspan="3">Minimum Breakdown Voltage Paper Covered Wire</th></tr>
<tr><th>Bare</th><th>Single Film</th><th>Heavy Film</th></tr>
<tr><td>8 – 9</td><td>None</td><td>115</td><td>---</td><td>1490</td></tr>
<tr><td>10</td><td>1.00</td><td>330</td><td>---</td><td>2980</td></tr>
<tr><td>11 – 15</td><td>0.75</td><td>265</td><td>1820*</td><td>3065</td></tr>
<tr><td>16 – 20</td><td>0.50</td><td>265</td><td>1630</td><td>2750</td></tr>
<tr><td>21 – 24</td><td>0.50</td><td>265</td><td>1495</td><td>2475</td></tr>
<tr><td>25 – 28</td><td>0.25</td><td>200</td><td>1305</td><td>2200</td></tr>
<tr><td>29 – 32</td><td>0.25</td><td>200</td><td>1030</td><td>1790</td></tr>
</table>
*Sizes 14 and 15 AWG only.</td></tr>
</table>

NOTE 1 – The calculated maximum increase due to the paper covering may be exceeded provided the measured overall diameter of the covered wire does not exceed the sum of the nominal conductor diameter + 1% (for paper covered bare products), or maximum film insulated diameter (given in Table 1-1), plus the maximum increase due to the paper.

NOTE 2 – The number of paper tapes, type of paper, paper tape thickness, and the degree of overlap shall be agreed upon between the user and supplier.

© Copyright 2005 by the National Electrical Manufacturers Association.

Copyright National Electrical Manufacturers Association
Provided by IHS under license with NEMA
No reproduction or networking permitted without license from IHS
Not for Resale

MW 32-C
DOUBLE PAPER SINGLE COTTON COVERED BARE RECTANGULAR AND SQUARE COPPER MAGNET WIRE THERMAL CLASS 90 OR 105

INSULATING MATERIALS The insulating material shall be rope paper or Kraft paper, or both. The cotton shall be of good quality and substantially free from knots, ravelings, foreign matter, and other irregularities. The paper covering shall be two thicknesses of tape applied using one or two tapes wrapped firmly, closely, evenly, and continuously around the wire. The use of suitable adhesive material shall be permitted. The cotton covering shall be wrapped firmly, closely, evenly, and continuously around the wire and in the direction opposite to that in which the paper was spirally wrapped.

THERMAL CLASS 90 unimpregnated or 105 impregnated or in oil, when tested in accordance with Part 3, Clause 3.58.1.

GENERAL REQUIREMENTS See Part 1.

OBSOLETE

Properties	Procedure, Part 3, Clause	Requirement
DIMENSIONS	3.2.2.2	a. Radii in ac dance w e 1-8 b. Th s a width to es in ac dance h Table 1-9 c. D a increas ue to insula n in accordance with Table PC (M 32-C
ELONGATION		Not les han p r thickness of 0.049 inch (1.25 mm) and r 0 pe nt ickness less than 0.049 inch (1.25 mm)
SPRINGBACK		Not gr er o°
COVERAGE	1	C shall not loosen sufficiently to expose the bare wire

Nominal Thickness of Bare Wire, Inches	Ratio of Mandrel Diameter to Thickness of Bare Wire: Paper and Cotton Covered	Ratio of Mandrel Diameter to Thickness of Bare Wire: Paper Covered
0.220 – 0.098	6	6
0.088 – 0.049	4	6
0.044 – 0.025	3	6

NOTE 1 – The maximum increase due to the double paper single cotton covering may be exceeded provided the measured overall dimension of the covered wire does not exceed the sum of the specified maximum conductor thickness plus the maximum increase due to the double paper single cotton covering.

NOTE 2 – The type of paper tape, the paper tape thicknesses, the degree of tape overlap, type of cotton, and use of adhesive materials shall be agreed upon between the user and supplier.

© Copyright 2005 by the National Electrical Manufacturers Association.

Copyright National Electrical Manufacturers Association
Provided by IHS under license with NEMA
No reproduction or networking permitted without license from IHS
Not for Resale

TABLE PC (MW 32-C)
RANGE OF INCREASE IN DIMENSIONS, INCHES
DUE TO DOUBLE PAPER SINGLE COTTON COVERING

Nominal Thickness		Nominal Width																												Nominal Thickness	
Millimeters		2.05	2.18	2.30	2.44	2.59	2.74	2.91	3.08	3.26	3.46	3.66	3.88	4.12	4.36	4.62	4.90	5.19	5.50	5.83	6.18	6.54	6.93	7.35	7.79	8.25	8.74	9.27	9.82	10.40	11.03	11.68	12.38	13.12	Millimeters	
	Inches	0.081	0.086	0.091	0.096	0.102	0.108	0.114	0.121	0.128	0.136	0.144	0.153	0.162	0.172	0.182	0.193	0.204	0.217	0.229				0.289				0.365	0.387	0.410	0.434	0.460	0.487	0.517	Inches	
1.02	0.040																																		0.040	1.02
1.15	0.045																																		0.045	1.15
1.29	0.051																																		0.051	1.29
1.45	0.057																																		0.057	1.45
1.63	0.064																																		0.064	1.63
1.83	0.072																																		0.072	1.83
2.05	0.081																																		0.081	2.05
2.30	0.091																																		0.091	2.30
2.59	0.102																																		0.102	2.59
2.91	0.114																																		0.114	2.91
3.26	0.128																																		0.128	3.26
3.66	0.144																																		0.144	3.66
4.12	0.162																																		0.162	4.12
4.62	0.182																																		0.182	4.62
5.19	0.204																																		0.204	5.19
5.83	0.229																																		0.229	5.83

OBSOLETE

0.013-0.019

0.015-0.021

0.015-0.022

0.016-0.023

0.016-0.023

0.017-0.024

0.015-0.022

NOTE–The equivalent mm increases in dimensions are shown below

Inch	0.013	0.014	0.015	0.016	0.017	0.018	0.019	0.020	0.021	0.022	0.023	0.024
mm	0.33	0.36	0.38	0.41	0.43	0.46	0.48	0.51	0.53	0.56	0.58	0.61

© Copyright 2005 by the National Electrical Manufacturers Association.

Copyright National Electrical Manufacturers Association
Provided by IHS under license with NEMA
No reproduction or networking permitted without license from IHS
Not for Resale

MW 33-C
PAPER COVERED BARE RECTANGULAR AND SQUARE COPPER MAGNET WIRE
THERMAL CLASS 90 OR 105

INSULATING MATERIALS The insulating material shall be rope paper or Kraft paper, or both. The paper covering shall be of one or more tapes wrapped firmly, closely, evenly, and continuously around the wire. The use of a suitable adhesive material shall be permitted.

THERMAL CLASS 90 unimpregnated or 105 impregnated or in oil, when tested in accordance with Part 3, Clause 3.58.1.

GENERAL REQUIREMENTS See Part 1.

Properties	Procedure, Part 3, Clause	Requirement
DIMENSIONS	3.2.2.2	a. Radii in accordance with Table 1-8 b. Thickness and width tolerances in accordance with Table 1-9 c. Increase in thickness due to the paper covering shall be as follows: *Min. thickness increase = 2(Equiv. No. of Layers* – 1)(Nom. tape thickness)* *Max. thickness increase = 2(Equiv. No. of Layers* + 1)(Nom. tape thickness)* d. The increase in width due to the paper covering shall be equal to or less than the increase in thickness * See table in Part 1, Clause 1.5.1
ELONGATION	3.4	Not less than 32 percent for a conductor thickness of 0.049 inch (1.25 mm) and greater, or 30 percent for a conductor thickness less than 0.049 inch (1.25 mm)
COVERAGE	3.12.2	Paper covering shall not loosen sufficiently to expose the bare wire, when bent around a mandrel 6 times the thickness of the bare wire.

NOTE 1 – The calculated maximum increase due to the paper covering may be exceeded provided the measured overall dimension of the covered wire does not exceed the sum of the specified maximum conductor thickness plus the maximum increase due to the paper.

NOTE 2 – The number of paper tapes, type of paper, paper tape thickness, and the degree of overlap shall be agreed upon between the user and supplier.

© Copyright 2005 by the National Electrical Manufacturers Association.

Copyright National Electrical Manufacturers Association
Provided by IHS under license with NEMA
No reproduction or networking permitted without license from IHS
Not for Resale

MW 35-A
POLYESTER (AMIDE) (IMIDE) OVERCOATED WITH POLYAMIDEIMIDE FILM INSULATED ROUND ALUMINUM MAGNET WIRE THERMAL CLASS 220

INSULATING MATERIAL The conductor shall be coated with a dual film. The underlying coating is based on polyester (amide)(imide) resins (1.4.2). The superimposed coating is based on polyamideimide resins (1.4.2).

THERMAL CLASS 220 as defined in Part 1, Clause 1.8, and when tested in accordance with Part 3, Clause 3.58.1.

GENERAL REQUIREMENTS See Part 1.

Properties	Procedure, Part 3, Clause	Requirement
DIMENSIONS	3.2.1.1	Single 14–28 AWG; Heavy 4–28 AWG in accordance with Table 1-1
ADHERENCE AND FLEXIBILITY	3.3.1	No cracks visible in the film coating
ELONGATION	3.4	Not less than value in Table 3.4.2
HEAT SHOCK	3.5	No cracks visible in the film coating after conditioning at 240°C
DIELECTRIC BREAKDOWN	3.8.2 3.8.3	4–9 AWG Not less than the value in Table 3.8.2 10–28 AWG Not less than the value in Table 3.8.3.2
CONTINUITY	3.9.2	14–28 AWG Max number of discontinuities in accordance with Table 3.9.2.1
PERIODIC CONFORMANCE TESTS		
SOLUBILITY	3.51	Specimens immersed in xylene and 50/50 xylene/butyl Cellosolve shall not soften sufficiently to expose the bare conductor
DIELECTRIC BREAKDOWN AT RATED TEMPERATURE	3.52	Average not less than 75% of the value in Table 3.8.3.2
SCRAPE RESISTANCE	3.59	Lowest "grams-to-fail" load for any one of the three tests and the average of the three tests shall not be less than the values in Table 3.59.1

© Copyright 2005 by the National Electrical Manufacturers Association.

Copyright National Electrical Manufacturers Association
Provided by IHS under license with NEMA
No reproduction or networking permitted without license from IHS
Not for Resale

MW 35-C
POLYESTER (AMIDE)(IMIDE) OVERCOATED WITH POLYAMIDEIMIDE FILM INSULATED ROUND COPPER MAGNET WIRE THERMAL CLASS 200

INSULATING MATERIALS The conductor shall be coated with a dual film. The underlying coating is based on polyester (amide)(imide) resins (1.4.2). The superimposed coating is based on polyamideimide resins (1.4.2).

THERMAL CLASS 200 as defined in Part 1, Clause 1.8, and when tested in accordance with Part 3, Clause 3.58.1.

GENERAL REQUIREMENTS See Part 1.

Properties	Procedure, Part 3, Clause	Requirement
DIMENSIONS	3.2.1.1	Single 14–44 AWG; Heavy 4–44 AWG; Triple 14–44 AWG; Quad 10–30 AWG In accordance with Table 1-1
ADHERENCE AND FLEXIBILITY	3.3.1	No cracks visible in the film coating
ELONGATION	3.4	Not less than value in Table 3.4.2
HEAT SHOCK	3.5	No cracks visible in the film coating after conditioning at 220°C
SPRINGBACK	3.7.1 3.7.2	14–30 AWG Not greater than the value in Table 3.7.1 4–13 AWG Not greater than 5°
DIELECTRIC BREAKDOWN	3.8.2 3.8.3 3.8.7	4–9 AWG Not less than the value in Table 3.8.2 10–37 AWG Not less than the value in Table 3.8.3.2 38–44 AWG Not less than the value in Table 3.8.7.3
CONTINUITY	3.9.2	14–44 AWG Max number of discontinuities in accordance with Table 3.9.2.1
PERIODIC CONFORMANCE TESTS		
THERMOPLASTIC FLOW	3.50	Median not less than 300°C
SOLUBILITY	3.51	Specimens immersed in xylene and 50/50 xylene/butyl Cellosolve shall not soften sufficiently to expose the bare conductor
DIELECTRIC BREAKDOWN AT RATED TEMPERATURE	3.52	Average not less than 75% of the value in Table 3.8.3.2
SCRAPE RESISTANCE	3.59	Lowest "grams-to-fail" load for any one of the three tests and the average of the three tests shall not be less than the values in Table 3.59.1

© Copyright 2005 by the National Electrical Manufacturers Association.

Copyright National Electrical Manufacturers Association
Provided by IHS under license with NEMA
No reproduction or networking permitted without license from IHS
Not for Resale

MW 36-A
POLYESTER (AMIDE)(IMIDE) OVERCOATED WITH POLYAMIDEIMIDE, FILM INSULATED RECTANGULAR AND SQUARE ALUMINUM MAGNET WIRE THERMAL CLASS 220

INSULATING MATERIALS The conductor shall be coated with a dual film. The underlying coating is based on polyester (amide)(imide) resins (1.4.2). The superimposed coating is based on polyamideimide resins (1.4.2).

THERMAL CLASS 220 as defined in Part 1, Clause 1.8, and when tested in accordance with Part 3, Clause 3.58.1.

GENERAL REQUIREMENTS See Part 1.

<table>
<tr><th>Properties</th><th>Procedure, Part 3, Clause</th><th>Requirement</th></tr>
<tr><td>DIMENSIONS – Bare Wire
Insulation</td><td>3.2.2.1
3.2.2.1</td><td>Rectangular and square in accordance with Tables 1–8 and 1-11
Rectangular and square in accordance with Tables 1-10 and 1-12</td></tr>
<tr><td>ADHERENCE AND FLEXIBILITY</td><td>3.3.3</td><td>No cracks visible in the film coating after 15 percent elongation</td></tr>
<tr><td>ELONGATION</td><td>3.4</td><td>Not less than 15 percent</td></tr>
<tr><td>HEAT SHOCK</td><td>3.5</td><td>No cracks visible in the film coating after 10 percent elongation followed by conditioning at 240°C</td></tr>
<tr><td>DIELECTRIC BREAKDOWN</td><td>3.8.2</td><td><table><tr><th></th><th colspan="2">Minimum Breakdown Voltage</th></tr><tr><th>Film insulation</th><th>Any three of four electrodes</th><th>Fourth electrode</th></tr><tr><td>Heavy</td><td>1500</td><td>500</td></tr><tr><td>Quadruple</td><td>2500</td><td>900</td></tr></table></td></tr>
<tr><td colspan="3">PERIODIC CONFORMANCE TESTS</td></tr>
<tr><td>SOLUBILITY</td><td>3.51</td><td>Specimens immersed in xylene and 50/50 xylene/butyl Cellosolve shall not soften sufficiently to expose the bare conductor</td></tr>
<tr><td>DIELECTRIC BREAKDOWN AT RATED TEMPERATURE</td><td>3.52</td><td>Average not less than 75% of the room temperature dielectric breakdown requirement in Table 3.8.3.2, when tested on MW 35-A Heavy Build</td></tr>
</table>

--`,,```,,,,````-`-`,,`,,`,`,,`---

© Copyright 2005 by the National Electrical Manufacturers Association.

Copyright National Electrical Manufacturers Association
Provided by IHS under license with NEMA
No reproduction or networking permitted without license from IHS
Not for Resale

MW 36-C
POLYESTER (AMIDE)(IMIDE) OVERCOATED WITH POLYAMIDEIMIDE FILM INSULATED RECTANGULAR AND SQUARE COPPER MAGNET WIRE THERMAL CLASS 200

INSULATING MATERIALS The conductor shall be coated with a dual film. The underlying coating is based on polyester (amide)(imide) resins (1.4.2). The superimposed coating is based on polyamideimide resins (1.4.2).

THERMAL CLASS 200 as defined in Part 1, Clause 1.8, and when tested in accordance with Part 3, Clause 3.58.1.

GENERAL REQUIREMENTS See Part 1.

<table>
<tr><th>Properties</th><th>Procedure, Part 3, Clause</th><th>Requirement</th></tr>
<tr><td>DIMENSIONS – Bare Wire
Insulation</td><td>3.2.2.1
3.2.2.1</td><td>Rectangular and square in accordance with Tables 1–8 and 1-11
Rectangular and square in accordance with Tables 1-10 and 1-12</td></tr>
<tr><td>ADHERENCE AND FLEXIBILITY</td><td>3.3.3</td><td>No cracks visible in the film coating</td></tr>
<tr><td>ELONGATION</td><td>3.4</td><td>Not less than 32 percent</td></tr>
<tr><td>HEAT SHOCK</td><td>3.5</td><td>No cracks visible in the film coating after 15% elongation followed by conditioning at 220°C</td></tr>
<tr><td>SPRINGBACK</td><td>3.7.2</td><td>Not greater than 5°</td></tr>
<tr><td>DIELECTRIC BREAKDOWN</td><td>3.8.2</td><td>
<table>
<tr><th rowspan="2">Film insulation</th><th colspan="2">Minimum Breakdown Voltage</th></tr>
<tr><th>Any three of four electrodes</th><th>Fourth electrode</th></tr>
<tr><td>Heavy</td><td>1500</td><td>500</td></tr>
<tr><td>Quadruple</td><td>2500</td><td>900</td></tr>
</table>
Applicable to Heavy film insulated sizes having a thickness of less than 0.049 inch (1.25 mm) or a width greater than 0.492 inch (12.5 mm), or a width-to-thickness ratio greater than 5:1, and all quadruple. Other Heavy film insulated sizes shall be tested in accordance with 3.8.6.

3.8.6 Heavy film insulated sizes having a thickness 0.049 inch (1.25 mm) or greater; a width of 0.492 inch (12.5 mm) or less; and a width-to-thickness ratio not more than 5:1, shall have a dielectric breakdown voltage not less than in the table above after bending.</td></tr>
<tr><td colspan="3">PERIODIC CONFORMANCE TESTS</td></tr>
<tr><td>THERMOPLASTIC FLOW</td><td>3.50</td><td>Median not less than 300°C when tested as MW 35-C Heavy Build</td></tr>
<tr><td>SOLUBILITY</td><td>3.51.2</td><td>Specimens immersed in xylene and 50/50 xylene/butyl Cellosolve shall not soften sufficiently to expose the bare conductor</td></tr>
<tr><td>DIELECTRIC BREAKDOWN AT RATED TEMPERATURE</td><td>3.52</td><td>Average not less than 75% of the room temperature dielectric breakdown requirement in Table 3.8.3.2, when tested on MW 35-C Heavy Build</td></tr>
</table>

© Copyright 2005 by the National Electrical Manufacturers Association.

Copyright National Electrical Manufacturers Association
Provided by IHS under license with NEMA
No reproduction or networking permitted without license from IHS
Not for Resale

MW 37-C
POLYESTER (AMIDE)(IMIDE) OVERCOATED WITH POLYAMIDEIMIDE FILM INSULATED ROUND COPPER MAGNET WIRE THERMAL CLASS 220

INSULATING MATERIALS The conductor shall be coated with a dual film. The underlying coating is based on polyester (amide)(imide) resins (1.4.2). The superimposed coating is based on polyamideimide resins (1.4.2).

THERMAL CLASS 220 as defined in Part 1, Clause 1.8, and when tested in accordance with Part 3, Clause 3.58.1

GENERAL REQUIREMENTS See Part 1.

Properties	Procedure, Part 3, Clause	Requirement
DIMENSIONS	3.2.1.1	Single 14–44 AWG; Heavy 4–44 AWG; Triple 14–44 AWG In accordance with Table 1-1
ADHERENCE AND FLEXIBILITY	3.3.1	No cracks visible in the film coating
ELONGATION	3.4	Not less than value in Table 3.4.2
HEAT SHOCK	3.5	No cracks visible in the film coating after conditioning at 240°C
SPRINGBACK	3.7.1 3.7.2	14–30 AWG Not greater than the value in Table 3.7.1 4–13 AWG Not greater than 5°
DIELECTRIC BREAKDOWN	3.8.2 3.8.3 3.8.7	4–9 AWG Not less than the value in Table 3.8.2 10–37 AWG Not less than the value in Table 3.8.3.2 38–44 AWG Not less than the value in Table 3.8.7.3
CONTINUITY	3.9.2	14–44 AWG Max number of discontinuities in accordance with Table 3.9.2.1
PERIODIC CONFORMANCE TESTS		
THERMOPLASTIC FLOW	3.50	Median not less than 325°C
SOLUBILITY	3.51	Specimens immersed in xylene and 50/50 xylene/butyl Cellosolve shall not soften sufficiently to expose the bare conductor
DIELECTRIC BREAKDOWN AT RATED TEMPERATURE	3.52	Average not less than 75% of the value in Table 3.8.3.2
SCRAPE RESISTANCE	3.59	Lowest "grams-to-fail" load for any one of the three tests and the average of the three tests shall not be less than the values in Table 3.59.1

© Copyright 2005 by the National Electrical Manufacturers Association.

Copyright National Electrical Manufacturers Association
Provided by IHS under license with NEMA
No reproduction or networking permitted without license from IHS
Not for Resale

MW 38-C
POLYESTER (AMIDE)(IMIDE) OVERCOATED WITH POLYAMIDEIMIDE FILM INSULATED RECTANGULAR AND SQUARE COPPER MAGNET WIRE THERMAL CLASS 220

INSULATING MATERIALS The conductor shall be coated with a dual film. The underlying coating is based on polyester (amide)(imide) resins (1.4.2). The superimposed coating is based on polyamideimide resins (1.4.2).

THERMAL CLASS 220 as defined in Part 1, Clause 1.8, and when tested in accordance with Part 3, Clause 3.58.1

GENERAL REQUIREMENTS See Part 1.

<table>
<tr><th>Properties</th><th>Procedure, Part 3, Clause</th><th>Requirement</th></tr>
<tr><td>DIMENSIONS – Bare Wire
Insulation</td><td>3.2.2.1
3.2.2.1</td><td>Rectangular and square in accordance with Tables 1–8 and 1-11
Rectangular and square in accordance with Tables 1-10 and 1-12</td></tr>
<tr><td>ADHERENCE AND FLEXIBILITY</td><td>3.3.3</td><td>No cracks visible in the film coating</td></tr>
<tr><td>ELONGATION</td><td>3.4</td><td>Not less than 32 percent</td></tr>
<tr><td>HEAT SHOCK</td><td>3.5</td><td>No cracks visible in the film coating after 15% elongation followed by conditioning at 240°C</td></tr>
<tr><td>SPRINGBACK</td><td>3.7.2</td><td>Not greater than 5°</td></tr>
<tr><td>DIELECTRIC BREAKDOWN</td><td>3.8.2</td><td>
<table>
<tr><th rowspan="2">Film Insulation</th><th colspan="2">Minimum Breakdown Voltage</th></tr>
<tr><th>Any three of four electrodes</th><th>Fourth electrode</th></tr>
<tr><td>Heavy</td><td>1500</td><td>500</td></tr>
<tr><td>Quadruple</td><td>2500</td><td>900</td></tr>
</table>
Applicable to Heavy film insulated sizes having a thickness of less than 0.049 inch (1.25 mm) or a width greater than 0.492 inch (12.5 mm), or a width-to-thickness ratio greater than 5:1, and all quadruple. Other Heavy film insulated sizes shall be tested in accordance with 3.8.6.

3.8.6 Heavy film insulated sizes having a thickness 0.049 inch (1.25 mm) or greater; a width of 0.492 inch (12.5 mm) or less; and a width-to-thickness ratio not more than 5:1, shall have a dielectric breakdown voltage not less than in the table above after bending.</td></tr>
<tr><td colspan="3">PERIODIC CONFORMANCE TESTS</td></tr>
<tr><td>THERMOPLASTIC FLOW</td><td>3.50</td><td>Median not less than 325°C when tested as MW 37-C Heavy Build</td></tr>
<tr><td>SOLUBILITY</td><td>3.51.2</td><td>Specimens immersed in xylene and 50/50 xylene/butyl Cellosolve shall not soften sufficiently to expose the bare conductor</td></tr>
<tr><td>DIELECTRIC BREAKDOWN AT RATED TEMPERATURE</td><td>3.52</td><td>Average not less than 75% of the room temperature dielectric breakdown requirement in Table 3.8.3.2, when tested on MW 35-C Heavy Build</td></tr>
</table>

© Copyright 2005 by the National Electrical Manufacturers Association.

Copyright National Electrical Manufacturers Association
Provided by IHS under license with NEMA
No reproduction or networking permitted without license from IHS
Not for Resale

MW 41-C
GLASS FIBER COVERED, BARE OR FILM INSULATED ROUND COPPER MAGNET WIRE THERMAL CLASS 155

INSULATING MATERIALS The glass fiber shall be electrical grade continuous filament glass yarn. If an underlying film coating is used, it shall have at least a Class 130 rating. The glass fiber covering shall be wrapped firmly, closely, evenly, and continuously around the wire. The glass fiber covering shall be treated with an insulating varnish to provide a tough outer finish.

THERMAL CLASS 155 as defined in Part 1, Clause 1.8 and when tested in accordance with Part 3, Clause 3.58.1.

GENERAL REQUIREMENTS See Part 1.

<table>
<tr><th>Properties</th><th>Procedure, Part 3, Clause</th><th>Requirement</th></tr>
<tr><td>DIMENSIONS</td><td>3.2.1.3</td><td>Single 4/0–30 AWG in accordance with Table 1-4
Double 4/0–30 AWG in accordance with Table 1-5</td></tr>
<tr><td>ADHERENCE AND FLEXIBILITY</td><td>3.3.2</td><td>Covering shall not open sufficiently to expose the bare or film insulated wire after bending on mandrel sizes as follows:
<table>
<tr><th>AWG Size</th><th>Mandrel Diameter</th></tr>
<tr><td>1/0 and larger</td><td>15d</td></tr>
<tr><td>1 to 30</td><td>10d</td></tr>
</table></td></tr>
<tr><td>ELONGATION</td><td>3.4</td><td>Not less than the following:
<table>
<tr><th rowspan="2">AWG Size</th><th colspan="2">Minimum Elongation Percent</th></tr>
<tr><th>With Glass Fiber Covering</th><th>Glass Fiber Covering Removed</th></tr>
<tr><td>4/0–1/0</td><td>35.0</td><td>35.0</td></tr>
<tr><td>1–8</td><td>30.0</td><td>30.0</td></tr>
<tr><td>9–15</td><td>20.0</td><td>30.0</td></tr>
<tr><td>16–21</td><td>15.0</td><td>25.0</td></tr>
<tr><td>22–28</td><td>—</td><td>20.0</td></tr>
<tr><td>29 and 30</td><td>—</td><td>15.0</td></tr>
</table></td></tr>
<tr><td>SPRINGBACK</td><td>3.7.2</td><td>4/0–13 AWG Glass fiber covered bare: Not greater than 5º
4–13 AWG Glass fiber covered film insulated: Not greater than 5.5º</td></tr>
<tr><td>DIELECTRIC BREAKDOWN</td><td>3.8.2
3.8.4 or
3.8.5
3.8.4 or
3.8.5</td><td>Not less than the following:
<table>
<tr><th rowspan="2">AWG Size</th><th colspan="2">Mandrel Diameter</th><th colspan="2">Minimum Breakdown, Volts*</th></tr>
<tr><th>Inches</th><th>mm</th><th>Single</th><th>Double</th></tr>
<tr><td>4/0–9</td><td>—</td><td>—</td><td>170</td><td>315</td></tr>
<tr><td>10–23</td><td>1.00</td><td>25.4</td><td>360</td><td>540</td></tr>
<tr><td>24–30</td><td>0.25</td><td>6.3</td><td>225</td><td>400</td></tr>
</table>
*For glass fiber covered wire having an underlying film insulation, add the minimum breakdown voltage given in Part 3 for the film insulated wire</td></tr>
</table>

© Copyright 2005 by the National Electrical Manufacturers Association.

Copyright National Electrical Manufacturers Association
Provided by IHS under license with NEMA
No reproduction or networking permitted without license from IHS
Not for Resale

MW 42-C
GLASS FIBER COVERED, BARE OR HEAVY FILM INSULATED RECTANGULAR AND SQUARE COPPER MAGNET WIRE THERMAL CLASS 155

INSULATING MATERIALS The glass fiber shall be electrical grade continuous filament glass yarn. If an underlying film coating is used, it shall have at least a Class 130 rating. The glass fiber covering shall be wrapped firmly, closely, evenly, and continuously around the wire. The glass fiber covering shall be treated with an insulating varnish to provide a tough outer finish.

THERMAL CLASS 155 as defined in Part 1, Clause 1.8 and when tested in accordance with Part 3, Clause 3.58.1.

GENERAL REQUIREMENTS See Part 1.

Properties	Procedure, Part 3, Clause	Requirement
DIMENSIONS	3.2.2.2	Rectangular Wire: a. Radii in accordance with Tables 1–8 b. Thickness and width tolerances in accordance with Table 1-9 c. Dimensions and increase in thickness: Single–in accordance with Table 1-13 Double–in accordance with Table 1-14 or 1-15 Square Wire: a. Radii in accordance with Tables 1–11 b. Thickness and width tolerances in accordance with Table 1-12 c. Dimensions and increase in thickness: Single–in accordance with Table 1-19 Double–in accordance with Table 1-21
ADHERENCE AND FLEXIBILITY	3.3.3 3.3.5	Single or Double with underlying film: No cracks visible in the film insulation after 20 percent elongation. Examine with normal vision and without removing the glass fiber covering. Double without underlying film: Not less than 75 V/mil (2950 V/mm) of minimum thickness of the glass fiber covering on one side. NOTE–The minimum thickness of the glass fiber covering is 35% of the maximum increase in dimensions calculated from: Rectangular: Table 1-14 Square: Table 1-21
ELONGATION	3.4	Not less than 32 percent for a thickness of 0.049 inch (1.25 mm) and greater, or 30 percent for a thickness less than 0.049 inch (1.25 mm)
SPRINGBACK	3.7.2	Glass fiber covered Bare–Not greater than 5° Glass fiber covered Heavy Film Insulated–Not greater than 5.5°
DIELECTRIC BREAKDOWN	3.8.2	Not less than 90 Volts/mil (3543 V/mm) of the minimum thickness of the glass fiber covering on one side plus the minimum breakdown given in Part 2 for the film insulated wire, if applicable. NOTE–The minimum thickness of the glass fiber covering is 35% of the maximum increase in dimensions calculated from: Single: Rectangular: Table 1-13 Square: Table 1-19 Double: Rectangular: Table 1-14 Square: Table 1-21

© Copyright 2005 by the National Electrical Manufacturers Association.

Copyright National Electrical Manufacturers Association
Provided by IHS under license with NEMA
No reproduction or networking permitted without license from IHS
Not for Resale

MW 43-C
GLASS FIBER COVERED SILICONE TREATED BARE OR HEAVY FILM INSULATED RECTANGULAR AND SQUARE COPPER MAGNET WIRE THERMAL CLASS 200

INSULATING MATERIALS The glass fiber shall be electrical grade continuous filament glass yarn. If an underlying film coating is used, it shall have at least a Class 180 rating. The glass fiber covering shall be wrapped firmly, closely, evenly, and continuously around the wire. The glass fiber covering shall be treated with a modified silicone insulating varnish or silicone compound to provide a tough outer finish. If a tracer is used, one or more ends of glass yarn shall be black or green, and the dye or pigment used for this purpose shall be sufficiently stable so as to retain its color identity after the silicone treatment and subsequent baking.

THERMAL CLASS 200 as defined in Part 1, Clause 1.8 and when tested in accordance with Part 3, Clause 3.58.1.

GENERAL REQUIREMENTS See Part 1.

Properties	Procedure, Part 3, Clause	Requirement
DIMENSIONS	3.2.2.2	Rectangular Wire: a. Radii in accordance with Tables 1–8 b. Thickness and width tolerances in accordance with Table 1-9 c. Dimensions and increase in thickness: Single– in accordance with Table 1-13 Double– in accordance with Table 1-14 or 1-15 Square Wire: a. Radii in accordance with Tables 1–11 b. Thickness and width tolerances in accordance with Table 1-12 c. Dimensions and increase in thickness: Single–in accordance with Table 1-19 Double–in accordance with Table 1-21
ADHERENCE AND FLEXIBILITY	3.3.3 3.3.5	Single or Double with underlying film: No cracks visible in the film insulation after 20 percent elongation. Examine with normal vision and without removing the glass fiber covering. Double without underlying film: Not less than 75 Volts/mil (2950 V/mm) of minimum thickness of the glass fiber covering on one side. NOTE–The minimum thickness of the glass fiber covering is 35% of the maximum increase in dimensions calculated from: Rectangular: Table 1-13 Square: Table 1-19
ELONGATION	3.4	Not less than 32 percent for a thickness of 0.049 inch (1.25 mm) and greater, or 30 percent for a thickness less than 0.049 inch (1.25 mm)
SPRINGBACK	3.7.2	Glass fiber covered Bare–Not greater than 5° Glass fiber covered Heavy Film Insulated– Not greater than 5.5°
DIELECTRIC BREAKDOWN	3.8.2	Not less than 90 Volts/mil (3543 V/mm) of the minimum thickness of the glass fiber covering on one side plus the minimum breakdown given in Part 2 for the film insulated wire, if applicable. NOTE–The minimum thickness of the glass fiber covering is 35% of the maximum increase in dimensions calculated from: Single: Rectangular: Table 1-13 Square: Table 1-19 Double: Rectangular without underlying film: Table 1-14 Square: Table 1-21

© Copyright 2005 by the National Electrical Manufacturers Association.

Copyright National Electrical Manufacturers Association
Provided by IHS under license with NEMA
No reproduction or networking permitted without license from IHS
Not for Resale

MW 44-C
GLASS FIBER COVERED SILICONE TREATED, BARE OR HEAVY FILM INSULATED ROUND COPPER MAGNET WIRE THERMAL CLASS 200

INSULATING MATERIALS The glass fiber shall be electrical grade continuous filament glass yarn. If underlying film insulation is used, it shall have at least a Class 180 rating. The glass fiber covering shall be wrapped firmly, closely, evenly, and continuously around the wire. The glass fiber covering shall be treated with a modified silicone insulating varnish or silicone compound to provide a tough outer finish. If a tracer is used, one or more ends of glass yarn in the outer layer should be black or green, and the dye or pigment used for this purpose shall be sufficiently stable so as to retain its color identity after the silicone treatment and subsequent baking.

THERMAL CLASS 200 as defined in Part 1, Clause 1.8 and tested in accordance with Part 3, Clause 3.58.1.

GENERAL REQUIREMENTS See Part 1.

<table>
<tr><th>Properties</th><th>Procedure, Part 3, Clause</th><th>Requirement</th></tr>
<tr><td>DIMENSIONS</td><td>3.2.1.3</td><td>Single 4/0–30 AWG in accordance with Table 1-4
Double 4/0–30 AWG in accordance with Table 1-5</td></tr>
<tr><td>ADHERENCE AND FLEXIBILITY</td><td>3.3.2</td><td>Covering shall not open sufficiently to expose the bare or film insulated wire after bending on mandrel sizes as follows:
<table>
<tr><th>AWG Size</th><th>Mandrel Diameter</th></tr>
<tr><td>1/0 and larger</td><td>15d</td></tr>
<tr><td>1 to 30</td><td>10d</td></tr>
</table></td></tr>
<tr><td>ELONGATION</td><td>3.4</td><td>Not less than the values in Table 3.4.2.</td></tr>
<tr><td>SPRINGBACK</td><td>3.7.2</td><td>4/0–13 AWG Glass fiber covered bare: Not greater than 5º
4–13 AWG Glass fiber covered film insulated: Not greater than 5.5º</td></tr>
<tr><td>DIELECTRIC BREAKDOWN</td><td>3.8.2
3.8.4 or 3.8.5
3.8.4 or 3.8.5</td><td>Not less than the following:
<table>
<tr><th rowspan="2">AWG Size</th><th colspan="2">Mandrel Diameter</th><th colspan="2">Minimum Breakdown, Volts*</th></tr>
<tr><th>Inches</th><th>mm</th><th>Single</th><th>Double</th></tr>
<tr><td>4/0–9</td><td>—</td><td>—</td><td>170</td><td>315</td></tr>
<tr><td>10–23</td><td>1.00</td><td>25.4</td><td>360</td><td>540</td></tr>
<tr><td>24–30</td><td>0.25</td><td>6.3</td><td>225</td><td>400</td></tr>
</table>
*For glass fiber covered wire having an underlying film insulation, add the minimum breakdown voltage given in Part 3 for the film insulated wire</td></tr>
</table>

© Copyright 2005 by the National Electrical Manufacturers Association.

Copyright National Electrical Manufacturers Association
Provided by IHS under license with NEMA
No reproduction or networking permitted without license from IHS
Not for Resale

MW 45-C
POLYESTER GLASS FIBER COVERED, BARE OR HEAVY FILM INSULATED ROUND COPPER MAGNET WIRE THERMAL CLASS 155

INSULATING MATERIALS The fiber covering shall consist of a combination of polyester and glass fibers. The glass fibers shall be electrical grade continuous filament glass yarn. The polyester fiber shall be a high grade yarn resulting from the linear polymerization of ethylene glycol and terephthalic acid. The maximum content by weight of polyester fiber in the yarn shall not exceed 50 percent. If underlying film insulation is used, it shall have at least a Class 130 rating. The polyester glass fiber covering shall be wrapped firmly, closely, evenly, and continuously around the wire. The polyester glass fiber covering shall be fused; when required it may treated with an insulating varnish of compound to provide a tough outer finish.

THERMAL CLASS 155 as defined in Part 1, Clause 1.8 and when tested in accordance with Part 3, Clause 3.58.1.

GENERAL REQUIREMENTS See Part 1.

<table>
<tr><th>Properties</th><th>Procedure, Part 3, Clause</th><th>Requirement</th></tr>
<tr><td>DIMENSIONS</td><td>3.2.1.3</td><td>Single 4/0–30 AWG in accordance with Table 1-6
Double 4/0–30 AWG in accordance with Table 1-7</td></tr>
<tr><td>ADHERENCE AND FLEXIBILITY</td><td>3.3.2

3.3.3</td><td>Covering shall not open sufficiently to expose the bare or film insulated wire after bending on mandrel sizes as follows:
<table>
<tr><th>AWG Size</th><th>Mandrel Diameter</th></tr>
<tr><td>4/0–9</td><td>10d</td></tr>
<tr><td>10–30</td><td>5d</td></tr>
</table>
After a specimen has been elongated 25% or to its breaking point, whichever is less, there shall be no loosening, fraying or loss of adherence of the covering except at the point of rupture.</td></tr>
<tr><td>ELONGATION</td><td>3.4</td><td>Not less than the values in Table 3.4.2.</td></tr>
<tr><td>SPRINGBACK</td><td>3.7.2</td><td>4/0–13 AWG Polyester glass fiber covered bare:
Not greater than 5º

4–13 AWG Polyester glass fiber covered film insulated:
Not greater than 5.5º</td></tr>
<tr><td>DIELECTRIC BREAKDOWN</td><td>

3.8.2
3.8.4 or 3.8.5
3.8.4 or 3.8.5</td><td>Not less than the following:
<table>
<tr><th rowspan="2">AWG Size</th><th colspan="2">Mandrel Diameter</th><th colspan="2">Minimum Breakdown, Volts*</th></tr>
<tr><th>Inches</th><th>mm</th><th>Single</th><th>Double</th></tr>
<tr><td>4/0–9</td><td>—</td><td>—</td><td>150</td><td>270</td></tr>
<tr><td>10–23</td><td>1.00</td><td>25.4</td><td>360</td><td>540</td></tr>
<tr><td>24–30</td><td>0.25</td><td>6.3</td><td>225</td><td>400</td></tr>
</table>
*For polyester glass fiber covered wire having an underlying film insulation, add the minimum breakdown voltage given in Part 3 for the film insulated wire</td></tr>
</table>

© Copyright 2005 by the National Electrical Manufacturers Association.

Copyright National Electrical Manufacturers Association
Provided by IHS under license with NEMA
No reproduction or networking permitted without license from IHS
Not for Resale

MW 46-C
POLYESTER GLASS FIBER COVERED, BARE OR HEAVY FILM INSULATED RECTANGULAR AND SQUARE COPPER MAGNET WIRE THERMAL CLASS 155

INSULATING MATERIALS The fiber covering shall consist a combination of polyester and glass fibers. The glass fibers shall be electrical grade continuous filament glass yarn. The polyester fiber shall be a high grade yarn resulting from the linear polymerization of ethylene glycol and terephthalic acid. The maximum content by weight of polyester fiber in the yarn shall not exceed 50 percent. If underlying film coating is used, it shall have at least a Class 130 rating. The polyester glass fiber covering shall be wrapped firmly, closely, evenly, and continuously around the wire. The polyester glass fiber covering shall be fused; when required it may be treated with an insulating varnish or compound to provide a tough outer finish.

THERMAL CLASS 155 as defined in Part 1, Clause 1.8 and when tested in accordance with Part 3, Clause 3.58.1.

GENERAL REQUIREMENTS See Part 1.

Properties	Procedure, Part 3, Clause	Requirement
DIMENSIONS	3.2.2.2	Rectangular Wire: a. Radii in accordance with Tables 1–8 b. Thickness and width tolerances in accordance with Table 1-9 c. Dimensions and increase in thickness: Single– in accordance with Table 1-16 Double– in accordance with Table 1-17 or 1-18 Square Wire: a. Radii in accordance with Tables 1–11 b. Thickness and width tolerances in accordance with Table 1-12 c. Dimensions and increase in thickness: Single–in accordance with Table 1-20 Double–in accordance with Table 1-22
ADHERENCE AND FLEXIBILITY	3.3.3	Single or Double with underlying film: No cracks visible in the film insulation after 20 percent elongation. Examine with normal vision and without removing the polyester glass fiber covering.
	3.3.5	Double without underlying film: Not less than 75 Volts/mil (2950 V/mm) of minimum thickness of the polyester glass fiber covering on one side. NOTE–The minimum thickness of the polyester glass fiber covering is 35% of the maximum increase in dimensions calculated from: Rectangular: Table 1-17 Square: Table 1-22
ELONGATION	3.4	Not less than 32 percent for a thickness of 0.049 inch (1.25 mm) and greater, or 30 percent for a thickness less than 0.049 inch (1.25 mm)
SPRINGBACK	3.7.2	Polyester glass fiber covered Bare–Not greater than 5° Polyester glass fiber covered Heavy Film Insulated– Not greater than 5.5°
DIELECTRIC BREAKDOWN	3.8.2	Not less than 90 Volts/mil (3543 V/mm) of the minimum thickness of the glass fiber covering on one side plus the minimum breakdown given in Part 2 for the film insulated wire, if applicable. NOTE–The minimum thickness of the glass fiber covering is 35% of the maximum increase in dimensions calculated from: Single: Rectangular: Table 1-16 Square: Table 1-20 Double: Rectangular without underlying film: Table 1-17 Square: Table 1-22

© Copyright 2005 by the National Electrical Manufacturers Association.

Copyright National Electrical Manufacturers Association
Provided by IHS under license with NEMA
No reproduction or networking permitted without license from IHS
Not for Resale

MW 47-C
POLYESTER GLASS FIBER COVERED SILICONE TREATED, BARE OR FILM INSULATED ROUND COPPER MAGNET WIRE THERMAL CLASS 200

INSULATING MATERIALS The fiber covering shall consist of a combination of polyester and glass fibers. The glass fibers shall be electrical grade continuous filament glass yarn. The polyester fiber shall be a high grade yarn resulting from the linear polymerization of ethylene glycol and terephthalic acid. The maximum content by weight of polyester fiber in the yarn shall not exceed 50 percent. If underlying film insulation is used, it shall have at least a Class 180 rating. The polyester glass fiber covering shall be wrapped firmly, closely, evenly, and continuously around the wire. The polyester glass fiber covering shall be fused; when required it may treated with an insulating varnish of compound to provide a tough outer finish.

THERMAL CLASS 200 as defined in Part 1, Clause 1.8 and when tested in accordance with Part 3, Clause 3.58.1.

GENERAL REQUIREMENTS See Part 1.

<table>
<tr><th>Properties</th><th>Procedure, Part 3, Clause</th><th>Requirement</th></tr>
<tr><td>DIMENSIONS</td><td>3.2.1.3</td><td>Single 4–30 AWG in accordance with Table 1-6
Double 4–30 AWG in accordance with Table 1-7</td></tr>
<tr><td>ADHERENCE AND FLEXIBILITY</td><td>3.3.2</td><td>Covering shall not open sufficiently to expose the bare or film insulated wire after bending on mandrel sizes as follows:
<table>
<tr><th>AWG Size</th><th>Mandrel Diameter</th></tr>
<tr><td>4–9</td><td>10d</td></tr>
<tr><td>10–30</td><td>5d</td></tr>
</table></td></tr>
<tr><td></td><td>3.3.3</td><td>After a specimen has been elongated 25% or to its breaking point, whichever is less, there shall be no loosening, fraying or loss of adherence of the covering except at the point of rupture.</td></tr>
<tr><td>ELONGATION</td><td>3.4</td><td>Not less than the values in Table 3.4.2</td></tr>
<tr><td>SPRINGBACK</td><td>3.7.2</td><td>4/0–13 AWG Polyester glass fiber covered bare:
Not greater than 5º

4–13 AWG Polyester glass fiber covered film insulated:
Not greater than 5.5º</td></tr>
<tr><td>DIELECTRIC BREAKDOWN</td><td>

3.8.2
3.8.4 or 3.8.5
3.8.4 or 3.8.5</td><td>Not less than the following:
<table>
<tr><th rowspan="2">AWG Size</th><th colspan="2">Mandrel Diameter</th><th colspan="2">Minimum Breakdown, Volts*</th></tr>
<tr><th>Inches</th><th>mm</th><th>Single</th><th>Double</th></tr>
<tr><td>4–9</td><td>—</td><td>—</td><td>150</td><td>270</td></tr>
<tr><td>10–23</td><td>1.00</td><td>25.4</td><td>360</td><td>540</td></tr>
<tr><td>24–30</td><td>0.25</td><td>6.3</td><td>225</td><td>400</td></tr>
</table>
*For polyester glass fiber covered wire having an underlying film insulation, add the minimum breakdown voltage given in Part 3 for the film insulated wire</td></tr>
</table>

© Copyright 2005 by the National Electrical Manufacturers Association.

Copyright National Electrical Manufacturers Association
Provided by IHS under license with NEMA
No reproduction or networking permitted without license from IHS
Not for Resale

MW 48-C
POLYESTER GLASS FIBER COVERED SILICONE TREATED BARE OR HEAVY FILM INSULATED RECTANGULAR AND SQUARE COPPER MAGNET WIRE THERMAL CLASS 200

INSULATING MATERIALS The fiber covering shall consist a combination of polyester and glass fibers. The glass fibers shall be electrical grade continuous filament glass yarn. The polyester fiber shall be a high grade yarn resulting from the linear polymerization of ethylene glycol and terephthalic acid. The maximum content by weight of polyester fiber in the yarn shall not exceed 50 percent. If underlying film insulation is used, it shall have at least a Class 180 rating. The polyester glass fiber covering shall be wrapped firmly, closely, evenly, and continuously around the wire. The polyester glass fiber covering shall be fused and treated with a modified silicone insulating varnish. If a tracer is used, one or more ends of glass yarn in the outer layer should be black or green, and the dye or pigment used for this purpose shall be sufficiently stable so as to retain its color identity after the silicone treatment and subsequent baking.

THERMAL CLASS 200 as defined in Part 1, Clause 1.8 and when tested in accordance with Part 3, Clause 3.58.1.

GENERAL REQUIREMENTS See Part 1.

Properties	Procedure, Part 3, Clause	Requirement
DIMENSIONS	3.2.2.2	Rectangular Wire: a. Radii in accordance with Tables 1–8 b. Thickness and width tolerances in accordance with Table 1-9 c. Dimensions and increase in thickness: Single–in accordance with Table 1-16 Double–in accordance with Table 1-17 or 1-18 Square Wire: a. Radii in accordance with Tables 1–11 b. Thickness and width tolerances in accordance with Table 1-12 c. Dimensions and increase in thickness: Single–in accordance with Table 1-20 Double–in accordance with Table 1-22
ADHERENCE AND FLEXIBILITY	3.3.3 3.3.5	Single or Double with underlying film: No cracks visible in the film insulation after 20 percent elongation. Examine with normal vision and without removing the polyester glass fiber covering. Double without underlying film: Not less than 75 Volts/mil (2950 V/mm) of minimum thickness of the polyester glass fiber covering on one side. NOTE–The minimum thickness of the polyester glass fiber covering is 35% of the maximum increase in dimensions calculated from: Rectangular: Table 1-17 Square: Table 1-22
ELONGATION	3.4	Not less than 32 percent for a thickness less than 0.049 inch (1.25 mm) and greater or 30 percent for a thickness less than 0.049 inch (1.25 mm)
SPRINGBACK	3.7.2	Polyester glass fiber covered Bare–Not greater than 5° Polyester glass fiber covered Heavy Film Insulated– Not greater than 5.5°
DIELECTRIC BREAKDOWN	3.8.2	Not less than 90 Volts/mil (3543 V/mm) of the minimum thickness of the glass fiber covering on one side plus the minimum breakdown given in Part 2 for the film insulated wire, if applicable. NOTE–The minimum thickness of the glass fiber covering is 35% of the maximum increase in dimensions calculated from: Single: Rectangular: Table 1-16 Square: Table 1-20 Double: Rectangular without underlying film: Table 1-17 Square: Table 1-22

© Copyright 2005 by the National Electrical Manufacturers Association.

Copyright National Electrical Manufacturers Association
Provided by IHS under license with NEMA
No reproduction or networking permitted without license from IHS
Not for Resale

MW 50-C
GLASS FIBER COVERED HIGH TEMPERATURE ORGANIC VARNISH TREATED, BARE OR FILM INSULATED ROUND COPPER MAGNET WIRE THERMAL CLASS 180

INSULATING MATERIALS The glass fiber shall be electrical grade continuous filament glass yarn. If underlying film insulation is used, it shall have at least a Class 155 rating. The glass fiber covering shall be wrapped firmly, closely, evenly, and continuously around the wire. The glass fiber covering shall be treated with a high temperature non-silicone organic insulating varnish.

THERMAL CLASS 180 as defined in Part 1, Clause 1.8 and when tested in accordance with Part 3, Clause 3.58.1.

GENERAL REQUIREMENTS See Part 1.

<table>
<tr><th>Properties</th><th>Procedure, Part 3, Clause</th><th>Requirement</th></tr>
<tr><td>DIMENSIONS</td><td>3.2.1.3</td><td>Single 4/0–30 AWG in accordance with Table 1-4
Double 4/0–30 AWG in accordance with Table 1-5</td></tr>
<tr><td>ADHERENCE AND FLEXIBILITY</td><td>3.3.2</td><td>Covering shall not open sufficiently to expose the bare or film insulated wire after bending on mandrel sizes as follows:
<table>
<tr><th>AWG Size</th><th>Mandrel Diameter</th></tr>
<tr><td>1/0 and larger</td><td>15d</td></tr>
<tr><td>1 to 30</td><td>10d</td></tr>
</table></td></tr>
<tr><td>ELONGATION</td><td>3.4</td><td>Not less than the values in Table 3.4.2.</td></tr>
<tr><td>SPRINGBACK</td><td>3.7.2</td><td>4/0–13 AWG Glass fiber covered bare: Not greater than 5º
4–13 AWG Glass fiber covered film insulated: Not greater than 5.5º</td></tr>
<tr><td>DIELECTRIC BREAKDOWN</td><td>3.8.2
3.8.4 or 3.8.5
3.8.4 or 3.8.5</td><td>Not less than the following:
<table>
<tr><th rowspan="2">AWG Size</th><th colspan="2">Mandrel Diameter</th><th colspan="2">Minimum Breakdown, Volts*</th></tr>
<tr><th>Inches</th><th>mm</th><th>Single</th><th>Double</th></tr>
<tr><td>4/0–9</td><td>—</td><td>—</td><td>170</td><td>315</td></tr>
<tr><td>10–23</td><td>1.00</td><td>25.4</td><td>360</td><td>540</td></tr>
<tr><td>24–30</td><td>0.25</td><td>6.3</td><td>225</td><td>400</td></tr>
</table>
*For glass fiber covered wire having an underlying film insulation, add the minimum breakdown voltage given in Part 3 for the film insulated wire</td></tr>
</table>

© Copyright 2005 by the National Electrical Manufacturers Association.

Copyright National Electrical Manufacturers Association
Provided by IHS under license with NEMA
No reproduction or networking permitted without license from IHS
Not for Resale

MW 51-C
POLYESTER GLASS FIBER COVERED HIGH TEMPERATURE ORGANIC VARNISH TREATED BARE OR FILM INSULATED ROUND COPPER MAGNET WIRE THERMAL CLASS 180

INSULATING MATERIALS The fiber covering shall consist of a combination of polyester and glass fibers. The glass fibers shall be electrical grade continuous filament glass yarn. The polyester fiber shall be a high grade yarn resulting from the linear polymerization of ethylene glycol and terephthalic acid. The maximum content by weight of polyester fiber in the yarn shall not exceed 50 percent. If underlying film insulation is used, it shall have at least a Class 155 rating. The polyester glass fiber covering shall be wrapped firmly, closely, evenly, and continuously around the wire. The polyester glass fiber covering shall be fused and shall be treated with a high temperature non-silicone organic insulating varnish.

THERMAL CLASS 180 as defined in Part 1, Clause 1.8 and when tested in accordance with Part 3, Clause 3.58.1.

GENERAL REQUIREMENTS See Part 1.

<table>
<tr><th>Properties</th><th>Procedure, Part 3, Clause</th><th>Requirement</th></tr>
<tr><td>DIMENSIONS</td><td>3.2.1.3</td><td>Single 4–30 AWG in accordance with Table 1-6
Double 4–30 AWG in accordance with Table 1-7</td></tr>
<tr><td>ADHERENCE AND FLEXIBILITY</td><td>3.3.2</td><td>Covering shall not open sufficiently to expose the bare or film insulated wire after bending on mandrel sizes as follows:
<table>
<tr><th>AWG Size</th><th>Mandrel Diameter</th></tr>
<tr><td>4–9</td><td>10d</td></tr>
<tr><td>10–30</td><td>5d</td></tr>
</table></td></tr>
<tr><td>ELONGATION</td><td>3.4</td><td>Not less than the values in Table 3.4.2</td></tr>
<tr><td>SPRINGBACK</td><td>3.7.2</td><td>4–13 AWG Polyester glass fiber covered bare:
Not greater than 5º

4–13 AWG Polyester glass fiber covered film insulated:
Not greater than 5.5º</td></tr>
<tr><td>DIELECTRIC BREAKDOWN</td><td>3.8.2
3.8.4 or 3.8.5
3.8.4 or 3.8.5</td><td>Not less than the following:
<table>
<tr><th rowspan="2">AWG Size</th><th colspan="2">Mandrel Diameter</th><th colspan="2">Minimum Breakdown, Volts*</th></tr>
<tr><th>Inches</th><th>mm</th><th>Single</th><th>Double</th></tr>
<tr><td>4–9</td><td>—</td><td>—</td><td>150</td><td>270</td></tr>
<tr><td>10–23</td><td>1.00</td><td>25.4</td><td>360</td><td>540</td></tr>
<tr><td>24–30</td><td>0.25</td><td>6.3</td><td>225</td><td>400</td></tr>
</table>
*For polyester glass fiber covered wire having an underlying film insulation, add the minimum breakdown voltage given in Part 3 for the film insulated wire</td></tr>
</table>

--`,,```,,,,````-`-`,,`,,`,`,,`--- © Copyright 2005 by the National Electrical Manufacturers Association.

Copyright National Electrical Manufacturers Association
Provided by IHS under license with NEMA
No reproduction or networking permitted without license from IHS
Not for Resale

MW 52-C
GLASS FIBER COVERED HIGH TEMPERATURE ORGANIC VARNISH TREATED HEAVY FILM INSULATED RECTANGULAR AND SQUARE COPPER MAGNET WIRE THERMAL CLASS 180

INSULATING MATERIALS The glass fiber shall be electrical grade continuous filament glass yarn. The underlying film insulation shall have at least a Class 155 rating. The glass fiber covering shall be wrapped firmly, closely, evenly, and continuously around the wire. The glass fiber covering shall be treated with a high-temperature non-silicone insulating varnish.

THERMAL CLASS 180 as defined in Part 1, Clause 1.8 and when tested in accordance with Part 3, Clause 3.58.1.

GENERAL REQUIREMENTS See Part 1.

Properties	Procedure, Part 3, Clause	Requirement
DIMENSIONS	3.2.2.2	Rectangular Wire: a. Radii in accordance with Tables 1–8 b. Thickness and width tolerances in accordance with Table 1-9 c. Dimensions and increase in thickness in accordance with: Single–Table 1-13 Double–Table 1-14 or 1-15 Square Wire: a. Radii in accordance with Tables 1–11 b. Thickness and width tolerances in accordance with Table 1-12 c. Dimensions and increase in thickness in accordance with Single–Table 1-19 Double–Table 1-21
ADHERENCE AND FLEXIBILITY	3.3.3 3.3.5	Single or Double with underlying film: No cracks visible in the film insulation after 20 percent elongation. Examine with normal vision and without removing the glass fiber covering. Double without underlying film: Not less than 75 Volts/mil (2950 V/mm) of minimum thickness of the polyester glass fiber covering on one side. NOTE–The minimum thickness of the polyester glass fiber covering is 35% of the maximum increase in dimensions calculated from: Rectangular: Table 1-14 Square: Table 1-21
ELONGATION	3.4	Not less than 32 percent for a thickness of 0.049 inch (1.25 mm) and greater, or 30 percent for a thickness of less than 0.049 inch (1.25 mm)
SPRINGBACK	3.7.2	Glass fiber covered Bare–Not greater than 5° Glass fiber covered Heavy Film Insulated– Not greater than 5.5°
DIELECTRIC BREAKDOWN	3.8.2	Not less than 90 Volts/mil (3543 V/mm) of the minimum thickness of the glass fiber covering on one side plus the minimum breakdown given in Part 2 for the film insulated wire, if applicable. NOTE–The minimum thickness of the glass fiber covering is 35% of the maximum increase in dimensions calculated from: Single: Rectangular: Table 1-13 Square: Table 1-19 Double: Rectangular without underlying film: Table 1-14 Square: Table 1-21

© Copyright 2005 by the National Electrical Manufacturers Association.

Copyright National Electrical Manufacturers Association
Provided by IHS under license with NEMA
No reproduction or networking permitted without license from IHS
Not for Resale

MW 53-C
POLYESTER GLASS FIBER COVERED HIGH TEMPERATURE ORGANIC VARNISH TREATED BARE OR HEAVY FILM INSULATED RECTANGULAR AND SQUARE COPPER MAGNET WIRE THERMAL CLASS 180

INSULATING MATERIALS The fiber covering shall consist a combination of polyester and glass fibers. The glass fibers shall be electrical grade continuous filament glass yarn. The polyester fiber covering shall be a high grade yarn resulting from the linear polymerization of ethylene glycol and terephthalic acid. The maximum content by weight of polyester fiber in the yarn shall not exceed 50 percent. If underlying film insulation is used, it shall have at least a Class 155 rating. The polyester glass fiber covering shall be wrapped firmly, closely, evenly, and continuously around the wire. The polyester glass fiber covering shall be fused and treated with a high-temperature non-silicone insulating varnish.

THERMAL CLASS 180 as defined in Part 1, Clause 1.8 and when tested in accordance with Part 3, Clause 3.58.1.

GENERAL REQUIREMENTS See Part 1.

Properties	Procedure, Part 3, Clause	Requirement
DIMENSIONS	3.2.2.2	Rectangular Wire: a. Radii in accordance with Tables 1–8 b. Thickness and width tolerances in accordance with Table 1-9 c. Dimensions and increase in thickness: Single–in accordance with Table 1-16 Double–in accordance with Table 1-17 or 1-18 Square Wire: a. Radii in accordance with Tables 1–11 b. Thickness and width tolerances in accordance with Table 1-12 c. Dimensions and increase in thickness: Single–in accordance with Table 1-20 Double–in accordance with Table 1-22
ADHERENCE AND FLEXIBILITY	3.3.3	Single or Double with underlying film: No cracks visible in the film insulation after 20 percent elongation. Examine with normal vision and without removing the polyester glass fiber covering.
	3.3.5	Double without underlying film: Not less than 75 Volts/mil (2950 V/mm) of minimum thickness of the polyester glass fiber covering on one side. NOTE–The minimum thickness of the polyester glass fiber covering is 35% of the maximum increase in dimensions calculated from: Rectangular: Table 1-17 Square: Table 1-22
ELONGATION	3.4	Not less than 32 percent for a thickness of 0.049 inch (1.25 mm) and greater, or 30 percent for a thickness less than 0.049 inch (1.25 mm)
SPRINGBACK	3.7.2	Polyester glass fiber covered Bare–Not greater than 5° Polyester glass fiber covered Heavy Film Insulated– Not greater than 5.5°
DIELECTRIC BREAKDOWN	3.8.2	Not less than 90 Volts/mil (3543 V/mm) of the minimum thickness of the glass fiber covering on one side plus the minimum breakdown given in Part 2 for the film insulated wire, if applicable. NOTE–The minimum thickness of the glass fiber covering is 35% of the maximum increase in dimensions calculated from: Single: Rectangular: Table 1-16 Square: Table 1-20 Double: Rectangular without underlying film: Table 1-17 Square: Table 1-22

© Copyright 2005 by the National Electrical Manufacturers Association.

Copyright National Electrical Manufacturers Association
Provided by IHS under license with NEMA
No reproduction or networking permitted without license from IHS
Not for Resale

<This page intentionally left blank.>

© Copyright 2005 by the National Electrical Manufacturers Association.

Copyright National Electrical Manufacturers Association
Provided by IHS under license with NEMA
No reproduction or networking permitted without license from IHS

Not for Resale

MW 60-A
AROMATIC POLYAMIDE PAPER COVERED RECTANGULAR AND SQUARE ALUMINUM MAGNET WIRE THERMAL CLASS 220

INSULATING MATERIALS The insulating material shall be an aromatic polyamide paper. The paper covering shall consist of one or more tapes, each wrapped firmly, closely, evenly, and continuously around the wire in a configuration necessary to provide the specified number of tape layers (thicknesses of paper). The paper covering shall consist of at least two thicknesses of paper with not less than 40-percent overlap. If an adhesive is used, this material shall perform in the applicable insulation system as required in Part 3, Clause 3.58.

THERMAL CLASS 220 as defined in Part 1, Clause 1.8 and when tested in accordance with Part 3, Clause 3.58.1.

GENERAL REQUIREMENTS See Part 1.

Properties	Procedure, Part 3, Clause	Requirement
DIMENSIONS	3.2.2.2	Rectangular Wire: a. Radii in accordance with Table 1-8 b. Thickness and width tolerances in accordance with Table 1-9 c. Increase in thickness due to paper covering in accordance Table PR (MW 60-A). Square Wire: Bare wire dimensions and tolerances, radii and increase in dimensions due to paper covering in accordance with Table PSQ (MW 60-A) for two or three thicknesses of paper, whichever applies. The increase in thickness for coverings having more than three thicknesses of paper shall be as follows: *Min. thickness increase = 2(Equiv. No. of Layers – 1)(Nom. tape thickness)* *Max. thickness increase = 2(Equiv. No. of Layers + 1)(Nom. tape thickness)*
ELONGATION	3.4	Not less than 15 percent
DIELECTRIC BREAKDOWN	3.8.2	Not less than 300 Volts/mil (11800 V/mm) of the minimum thickness of the paper covering on one side (one half the minimum increase)
COVERAGE	3.12.2	Covering shall not loosen appreciably nor open sufficiently to expose the bare wire after bending around a mandrel having a dimension 6 times the thickness of the bare wire.

© Copyright 2005 by the National Electrical Manufacturers Association.

Copyright National Electrical Manufacturers Association
Provided by IHS under license with NEMA
No reproduction or networking permitted without license from IHS
Not for Resale

MW 60-A
AROMATIC POLYAMIDE PAPER COVERED RECTANGULAR AND SQUARE ALUMINUM MAGNET WIRE THERMAL CLASS 220

Table PR (MW 60-A)
INCREASE IN DIMENSIONS OF RECTANGULAR WIRE DUE TO PAPER COVERING

Number of Tapes	Nominal Tape Thickness = 0.002 in. (.051 mm)				Nominal Tape Thickness = 0.003 in. (.076 mm)			
	Minimum		Maximum		Minimum		Maximum	
	inches	mm	inches	mm	inches	mm	inches	mm
2	0.004	0.102	0.012	0.305	0.006	0.152	0.018	0.457
3	0.008	0.203	0.016	0.406	0.012	0.305	0.024	0.610

NOTE 1 – The calculated max. increase due to polyamide paper covering may be exceeded provided the measured overall dimension of covered wire does not exceed the sum of the specified maximum conductor thickness plus maximum increase due to covering.

NOTE 2 – The increase in width due to the paper covering shall be equal to or less than the increase in thickness.

NOTE 3 – Number of paper tapes, paper tape thickness, and degree of overlap shall be agreed upon between user and supplier.

Table PSQ (MW 60-A)—Dimensions 1/0—14 AWG

(Inches)

Square AWG Size	Two Tape Thicknesses				Three Tape Thicknesses			
	Nom. Tape = 0.002 in.		Nom. Tape = 0.003 in.		Nom. Tape = 0.002 in.		Nom. Tape = 0.003 in.	
	Minimum Increase	Maximum Overall	Minimum Increase	Maximum Overall	Minimum Increase	Maximum Overall	Minimum Increase	Maximum Overall
1/0	0.004	0.3399	0.006	0.3459	0.008	0.3439	0.012	0.3519
1	0.004	0.3042	0.006	0.3102	0.008	0.3082	0.012	0.3162
2	0.004	0.2722	0.006	0.2782	0.008	0.2762	0.012	0.2842
3	0.004	0.2437	0.006	0.2497	0.008	0.2477	0.012	0.2557
4	0.004	0.2183	0.006	0.2243	0.008	0.2223	0.012	0.2303
5	0.004	0.1957	0.006	0.2017	0.008	0.1997	0.012	0.2077
6	0.004	0.1756	0.006	0.1816	0.008	0.1796	0.012	0.1876
7	0.004	0.1577	0.006	0.1637	0.008	0.1617	0.012	0.1697
8	0.004	0.1418	0.006	0.1478	0.008	0.1458	0.012	0.1538
9	0.004	0.1275	0.006	0.1335	0.008	0.1315	0.012	0.1395
10	0.004	0.1149	0.006	0.1209	0.008	0.1189	0.012	0.1269
11	0.004	0.1037	0.006	0.1097	0.008	0.1077	0.012	0.1157
12	0.004	0.0938	0.006	0.0998	0.008	0.0978	0.012	0.1058
13	0.004	0.0850	0.006	0.0910	0.008	0.0890	0.012	0.0970
14	0.004	0.0771	0.006	0.0831	0.008	0.0811	0.012	0.0891

(mm)

Square AWG Size	Two Tape Thicknesses				Three Tape Thicknesses			
	Nom. Tape = 0.051		Nom. Tape = 0.076		Nom. Tape = 0.051		Nom. Tape = 0.076	
	Minimum Increase	Maximum Overall	Minimum Increase	Maximum Overall	Minimum Increase	Maximum Overall	Minimum Increase	Maximum Overall
1/0	0.102	8.633	0.152	8.786	0.203	8.735	0.305	8.938
1	0.102	7.727	0.152	7.879	0.203	7.828	0.305	8.031
2	0.102	6.914	0.152	7.066	0.203	7.015	0.305	7.219
3	0.102	6.190	0.152	6.342	0.203	6.292	0.305	6.495
4	0.102	5.545	0.152	5.697	0.203	5.646	0.305	5.850
5	0.102	4.971	0.152	5.123	0.203	5.072	0.305	5.276
6	0.102	4.460	0.152	4.613	0.203	4.562	0.305	4.765
7	0.102	4.006	0.152	4.158	0.203	4.107	0.305	4.310
8	0.102	3.602	0.152	3.754	0.203	3.703	0.305	3.907
9	0.102	3.239	0.152	3.391	0.203	3.340	0.305	3.543
10	0.102	2.918	0.152	3.071	0.203	3.020	0.305	3.223
11	0.102	2.634	0.152	2.786	0.203	2.736	0.305	2.939
12	0.102	2.383	0.152	2.535	0.203	2.484	0.305	2.687
13	0.102	2.159	0.152	2.311	0.203	2.261	0.305	2.464
14	0.102	1.958	0.152	2.111	0.203	2.060	0.305	2.263

NOTE–The maximum overall dimensions have been calculated in accordance with the values in Table PR (MW 60-A)

© Copyright 2005 by the National Electrical Manufacturers Association.

Copyright National Electrical Manufacturers Association
Provided by IHS under license with NEMA
No reproduction or networking permitted without license from IHS
Not for Resale

MW 60-C
AROMATIC POLYAMIDE PAPER COVERED RECTANGULAR AND SQUARE COPPER MAGNET WIRE THERMAL CLASS 220

INSULATING MATERIALS The insulating material shall be an aromatic polyamide paper. The paper covering shall consist of one or more tapes, each wrapped firmly, closely, evenly, and continuously around the wire in a configuration necessary to provide the specified number of tape layers (thicknesses of paper). The paper covering shall consist of at least two thicknesses of paper with not less than 40-percent overlap. If an adhesive is used, this material shall perform in the applicable insulation system as required in Part 3, Clause 3.58.

THERMAL CLASS 220 as defined in Part 1, Clause 1.8 and when tested in accordance with Part 3, Clause 3.58.1.

GENERAL REQUIREMENTS See Part 1.

Properties	Procedure, Part 3, Clause	Requirement
DIMENSIONS	3.2.2.2	Rectangular Wire: a. Radii in accordance with Table 1-8 b. Thickness and width tolerances in accordance with Table 1-9 c. Increase in thickness due to paper covering in accordance with Table PR (MW 60-C) Square Wire: Bare wire dimensions and tolerances, radii and increase in dimensions due to paper covering in accordance with Tables PSQ (MW 60-C) for two or three thicknesses of paper, whichever applies. The increase in thickness for coverings having more than three thicknesses of paper shall be as follows: *Min. thickness increase = 2(Equiv. No. of Layers – 1)(Nom. tape thickness)* *Max. thickness increase = 2(Equiv. No. of Layers + 1)(Nom. tape thickness)*
ELONGATION	3.4	Not less than 32 percent for thicknesses of 0.049 inch (1.25 mm and greater or 30 percent for thicknesses less than 0.049 inch (1.25 mm)
SPRINGBACK	3.7.2	Not greater than 5.5º
DIELECTRIC BREAKDOWN	3.8.2	Not less than 300 Volts/mil (11800 V/mm) of the minimum thickness of the paper covering on one side (one half the minimum increase)
COVERAGE	3.12.2	Covering shall not loosen appreciably nor open sufficiently to expose the bare wire after bending around a mandrel having a dimension 6 times the thickness of the bare wire.

NOTE 1 – The calculated maximum increase due to the polyamide paper covering may be exceeded provided the measured overall dimension of the covered wire does not exceed the sum of the specified maximum conductor thickness plus the maximum increase due to the covering.

NOTE 2 – The increase in width due to the paper covering shall be equal to or less than the increase in thickness.

NOTE 3 – The number of paper tapes, the paper tape thickness, and the degree of overlap shall be agreed upon between the user and supplier.

© Copyright 2005 by the National Electrical Manufacturers Association.

Copyright National Electrical Manufacturers Association
Provided by IHS under license with NEMA
No reproduction or networking permitted without license from IHS
Not for Resale

MW 60-C
AROMATIC POLYAMIDE PAPER COVERED RECTANGULAR AND SQUARE COPPER MAGNET WIRE THERMAL CLASS 220

Table PR (MW 60-C)
INCREASE IN DIMENSIONS OF RECTANGULAR WIRE DUE POLYAMIDE PAPER COVERING

Number of Tapes	Nominal Tape Thickness = 0.002 in. (.051 mm)				Nominal Tape Thickness = 0.003 in. (.076 mm)			
	Minimum		Maximum		Minimum		Maximum	
	inches	mm	inches	mm	inches	mm	inches	mm
2	0.004	0.102	0.012	0.305	0.006	0.152	0.018	0.457
3	0.008	0.203	0.016	0.406	0.012	0.305	0.024	0.610

NOTE 1 – The calculated maximum increase due to the polyamide paper covering may be exceeded provided the measured overall dimension of the covered wire does not exceed the sum of the specified maximum conductor thickness plus the maximum increase due to the covering.

NOTE 2 – The increase in width due to the paper covering shall be equal to or less than the increase in thickness.

NOTE 3 – The number of paper tapes, the paper tape thickness, and the degree of overlap shall be agreed upon between the user and supplier.

Table PSQ (MW 60-C)—Dimensions 1/0—14 AWG

(Inches)

Square AWG Size	Two Tape Thicknesses				Three Tape Thicknesses			
	Nom. Tape = 0.002 in.		Nom. Tape = 0.003 in.		Nom. Tape = 0.002 in.		Nom. Tape = 0.003 in.	
	Minimum Increase	Maximum Overall	Minimum Increase	Maximum Overall	Minimum Increase	Maximum Overall	Minimum Increase	Maximum Overall
1/0	0.004	0.3399	0.006	0.3459	0.008	0.3439	0.012	0.3519
1	0.004	0.3042	0.006	0.3102	0.008	0.3082	0.012	0.3162
2	0.004	0.2722	0.006	0.2782	0.008	0.2762	0.012	0.2842
3	0.004	0.2437	0.006	0.2497	0.008	0.2477	0.012	0.2557
4	0.004	0.2183	0.006	0.2243	0.008	0.2223	0.012	0.2303
5	0.004	0.1957	0.006	0.2017	0.008	0.1997	0.012	0.2077
6	0.004	0.1756	0.006	0.1816	0.008	0.1796	0.012	0.1876
7	0.004	0.1577	0.006	0.1637	0.008	0.1617	0.012	0.1697
8	0.004	0.1418	0.006	0.1478	0.008	0.1458	0.012	0.1538
9	0.004	0.1275	0.006	0.1335	0.008	0.1315	0.012	0.1395
10	0.004	0.1149	0.006	0.1209	0.008	0.1189	0.012	0.1269
11	0.004	0.1037	0.006	0.1097	0.008	0.1077	0.012	0.1157
12	0.004	0.0938	0.006	0.0998	0.008	0.0978	0.012	0.1058
13	0.004	0.0850	0.006	0.0910	0.008	0.0890	0.012	0.0970
14	0.004	0.0771	0.006	0.0831	0.008	0.0811	0.012	0.0891

(mm)

Square AWG Size	Two Tape Thicknesses				Three Tape Thicknesses			
	Nom. Tape = 0.051		Nom. Tape = 0.076		Nom. Tape = 0.051		Nom. Tape = 0.076	
	Minimum Increase	Maximum Overall	Minimum Increase	Maximum Overall	Minimum Increase	Maximum Overall	Minimum Increase	Maximum Overall
1/0	0.102	8.633	0.152	8.786	0.203	8.735	0.305	8.938
1	0.102	7.727	0.152	7.879	0.203	7.828	0.305	8.031
2	0.102	6.914	0.152	7.066	0.203	7.015	0.305	7.219
3	0.102	6.190	0.152	6.342	0.203	6.292	0.305	6.495
4	0.102	5.545	0.152	5.697	0.203	5.646	0.305	5.850
5	0.102	4.971	0.152	5.123	0.203	5.072	0.305	5.276
6	0.102	4.460	0.152	4.613	0.203	4.562	0.305	4.765
7	0.102	4.006	0.152	4.158	0.203	4.107	0.305	4.310
8	0.102	3.602	0.152	3.754	0.203	3.703	0.305	3.907
9	0.102	3.239	0.152	3.391	0.203	3.340	0.305	3.543
10	0.102	2.918	0.152	3.071	0.203	3.020	0.305	3.223
11	0.102	2.634	0.152	2.786	0.203	2.736	0.305	2.939
12	0.102	2.383	0.152	2.535	0.203	2.484	0.305	2.687
13	0.102	2.159	0.152	2.311	0.203	2.261	0.305	2.464
14	0.102	1.958	0.152	2.111	0.203	2.060	0.305	2.263

NOTE–The maximum overall dimensions have been calculated in accordance with the values in Table PR (MW 60-C)

© Copyright 2005 by the National Electrical Manufacturers Association.

Copyright National Electrical Manufacturers Association
Provided by IHS under license with NEMA
No reproduction or networking permitted without license from IHS
Not for Resale

MW 61-A (Paper)
AROMATIC POLYAMIDE PAPER COVERED ROUND ALUMINUM MAGNET WIRE THERMAL CLASS 220

INSULATING MATERIALS The insulating material shall be an aromatic polyamide paper. The paper covering shall consist of one or more tapes, each wrapped firmly, closely, evenly, and continuously around the wire in a configuration necessary to provide the specified number of tape layers (thicknesses of paper). The paper covering shall consist of at least two thicknesses of paper with not less than 40-percent overlap. If an adhesive is used, this material shall perform in the applicable insulation system as required in Part 3, Clause 3.58.

THERMAL CLASS 220 as defined in Part 1, Clause 1.8 and when tested in accordance with Part 3, Clause 3.58.1.

GENERAL REQUIREMENTS See Part 1.

Properties	Procedure, Part 3, Clause	Requirement
DIMENSIONS	3.2.1.2	4/0–9 AWG: See Table PR (MW 61-A) for wire having two or three thicknesses of paper. The increase in diameter for coverings having more than three thicknesses of paper shall be specified as follows: *Min. thickness increase = 2(Equiv. No. of Layers – 1)(Nom. tape thickness)* *Max. thickness increase = 2(Equiv. No. of Layers + 1)(Nom. tape thickness)* NOTE 1 – The calculated maximum increase due to the polyamide paper covering may be exceeded provided the measured overall diameter of the covered wire does not exceed the sum of the nominal conductor diameter + 1% plus the maximum increase due to the covering. NOTE 2 – The number of paper tapes, the paper tape thickness, and the degree of overlap shall be agreed upon between the user and supplier.
ADHERENCE AND FLEXIBILITY	3.3.1	8–9 AWG: Covering shall not open sufficiently to expose the bare wire, nor shall it be possible to slide the paper along the wire, after the specimen is elongated 15% (+2, -0) and wound around a 5d mandrel
	3.3.3	4/0–7 AWG: Covering shall not open sufficiently to expose the bare wire, nor shall the covering show any tearing
ELONGATION	3.4	Not less than 15 percent
DIELECTRIC BREAKDOWN	3.8.2	Not less than 300 Volts/mil (11800 V/mm) of the minimum thickness of the paper covering on one side (one half the minimum increase)
COVERAGE	3.12.2	Covering shall not loosen appreciably nor open sufficiently to expose the bare wire after bending around a 6d mandrel.

© Copyright 2005 by the National Electrical Manufacturers Association.

Copyright National Electrical Manufacturers Association
Provided by IHS under license with NEMA
No reproduction or networking permitted without license from IHS
Not for Resale

MW 61-A
AROMATIC POLYAMIDE PAPER COVERED ROUND ALUMINUM MAGNET WIRE THERMAL CLASS 220

Table PR (MW 61-A)—Dimensions 4/0—9 AWG

(inches)

	Two Tape Thicknesses				Three Tape Thicknesses			
	Nom. Tape = 0.002 in.		Nom. Tape = 0.003 in.		Nom. Tape = 0.002 in.		Nom. Tape = 0.003 in.	
AWG Size	Minimum Increase	Maximum Overall	Minimum Increase	Maximum Overall	Minimum Increase	Maximum Overall	Minimum Increase	Maximum Overall
4/0	0.004	0.4766	0.006	0.4826	0.008	0.4806	0.012	0.4886
3/0	0.004	0.4257	0.006	0.4317	0.008	0.4297	0.012	0.4377
2/0	0.004	0.3804	0.006	0.3864	0.008	0.3844	0.012	0.3924
1/0	0.004	0.3401	0.006	0.3461	0.008	0.3441	0.012	0.3521
1	0.004	0.3042	0.006	0.3102	0.008	0.3082	0.012	0.3162
2	0.004	0.2722	0.006	0.2782	0.008	0.2762	0.012	0.2842
3	0.004	0.2437	0.006	0.2497	0.008	0.2477	0.012	0.2557
4	0.004	0.2173	0.006	0.2233	0.008	0.2213	0.012	0.2293
5	0.004	0.1948	0.006	0.2008	0.008	0.1988	0.012	0.2068
6	0.004	0.1748	0.006	0.1808	0.008	0.1788	0.012	0.1868
7	0.004	0.1570	0.006	0.1630	0.008	0.1610	0.012	0.1690
8	0.004	0.1412	0.006	0.1472	0.008	0.1452	0.012	0.1532
9	0.004	0.1270	0.006	0.1330	0.008	0.1310	0.012	0.1390

(mm)

	Two Tape Thicknesses				Three Tape Thicknesses			
	Nom. Tape = 0.051 mm		Nom. Tape = 0.076 mm		Nom. Tape = 0.051 mm		Nom. Tape = 0.076 mm	
AWG Size	Minimum Increase	Maximum Overall	Minimum Increase	Maximum Overall	Minimum Increase	Maximum Overall	Minimum Increase	Maximum Overall
4/0	0.102	12.106	0.152	12.258	0.203	12.207	0.305	12.410
3/0	0.102	10.813	0.152	10.965	0.203	10.914	0.305	11.118
2/0	0.102	9.662	0.152	9.815	0.203	9.764	0.305	9.967
1/0	0.102	8.639	0.152	8.791	0.203	8.740	0.305	8.943
1	0.102	7.727	0.152	7.879	0.203	7.828	0.305	8.031
2	0.102	6.914	0.152	7.066	0.203	7.015	0.305	7.219
3	0.102	6.190	0.152	6.342	0.203	6.292	0.305	6.495
4	0.102	5.519	0.152	5.672	0.203	5.621	0.305	5.824
5	0.102	4.948	0.152	5.100	0.203	5.050	0.305	5.253
6	0.102	4.440	0.152	4.592	0.203	4.542	0.305	4.745
7	0.102	3.988	0.152	4.140	0.203	4.089	0.305	4.293
8	0.102	3.586	0.152	3.739	0.203	3.688	0.305	3.891
9	0.102	3.226	0.152	3.378	0.203	3.327	0.305	3.531

NOTE–The maximum overall diameters have been calculated in accordance with the formulas given in this specification:

© Copyright 2005 by the National Electrical Manufacturers Association.

Copyright National Electrical Manufacturers Association
Provided by IHS under license with NEMA
No reproduction or networking permitted without license from IHS
Not for Resale

MW 61-C
AROMATIC POLYAMIDE PAPER COVERED ROUND COPPER MAGNET WIRE THERMAL CLASS 220

INSULATING MATERIALS The insulating material shall be an aromatic polyamide paper. The paper covering shall consist of one or more tapes, each wrapped firmly, closely, evenly, and continuously around the wire in a configuration necessary to provide the specified number of tape layers (thicknesses of paper). The paper covering shall consist of at least two thicknesses of paper with not less than 40-percent overlap. If an adhesive is used, this material shall perform in the applicable insulation system as required in Part 3, Clause 3.58.

THERMAL CLASS 220 as defined in Part 1, Clause 1.8 and when tested in accordance with Part 3, Clause 3.58.1.

GENERAL REQUIREMENTS See Part 1.

<table>
<tr><th>Properties</th><th>Procedure, Part 3, Clause</th><th>Requirement</th></tr>
<tr><td>DIMENSIONS</td><td>3.2.1.2</td><td>See Table PR (MW 61-C) for wire having two or three thicknesses of paper. The increase in diameter for coverings having more than three thicknesses of paper shall be specified as follows:

Min. thickness increase = 2(Equiv. No. of Layers – 1)(Nom. tape thickness)

Max. thickness increase = 2(Equiv. No. of Layers + 1)(Nom. tape thickness)

NOTE 1 – The calculated maximum increase due to the polyamide paper covering may be exceeded provided the measured overall diameter of the covered wire does not exceed the sum of the nominal conductor diameter + 1% plus the maximum increase due to the covering.
NOTE 2 – The number of paper tapes, the paper tape thickness, and the degree of overlap shall be agreed upon between the user and supplier.</td></tr>
<tr><td>ADHERENCE AND FLEXIBILITY</td><td>3.3.1

3.3.3</td><td>8–9 AWG: Covering shall not open sufficiently to expose the bare wire, nor shall it be possible to slide the paper along the wire, after the specimen is elongated 15% (+2, -0) and wound around a 5d mandrel

4/0–7 AWG: Covering shall not open sufficiently to expose the bare wire, nor shall the covering show any tearing</td></tr>
<tr><td>ELONGATION</td><td>3.4</td><td>Not less than the following:
<table><tr><th>AWG Size</th><th>Minimum Elongation Percent</th></tr><tr><td>4/0-1/0</td><td>35</td></tr><tr><td>1–9</td><td>30</td></tr></table></td></tr>
<tr><td>DIELECTRIC BREAKDOWN</td><td>3.8.2</td><td>Not less than 300 Volts/mil (11800 V/mm) of the minimum thickness of the paper covering on one side (one half the minimum increase)</td></tr>
<tr><td>COVERAGE</td><td>3.12.2</td><td>Covering shall not loosen appreciably nor open sufficiently to expose the bare wire after bending around a 6d mandrel.</td></tr>
</table>

© Copyright 2005 by the National Electrical Manufacturers Association.

Copyright National Electrical Manufacturers Association
Provided by IHS under license with NEMA
No reproduction or networking permitted without license from IHS
Not for Resale

MW 61-C
AROMATIC POLYAMIDE PAPER COVERED ROUND COPPER MAGNET WIRE THERMAL CLASS 220

Table PR (MW 61-C)—Dimensions 4/0—9 AWG

(inches)

AWG Size	Two Tape Thicknesses				Three Tape Thicknesses			
	Nom. Tape = 0.002"		Nom. Tape = 0.003"		Nom. Tape = 0.002"		Nom. Tape = 0.003"	
	Minimum Increase	Maximum Overall	Minimum Increase	Maximum Overall	Minimum Increase	Maximum Overall	Minimum Increase	Maximum Overall
4/0	0.004	0.4766	0.006	0.4826	0.008	0.4806	0.012	0.4886
3/0	0.004	0.4257	0.006	0.4317	0.008	0.4297	0.012	0.4377
2/0	0.004	0.3804	0.006	0.3864	0.008	0.3844	0.012	0.3924
1/0	0.004	0.3401	0.006	0.3461	0.008	0.3441	0.012	0.3521
1	0.004	0.3042	0.006	0.3102	0.008	0.3082	0.012	0.3162
2	0.004	0.2722	0.006	0.2782	0.008	0.2762	0.012	0.2842
3	0.004	0.2437	0.006	0.2497	0.008	0.2477	0.012	0.2557
4	0.004	0.2173	0.006	0.2233	0.008	0.2213	0.012	0.2293
5	0.004	0.1948	0.006	0.2008	0.008	0.1988	0.012	0.2068
6	0.004	0.1748	0.006	0.1808	0.008	0.1788	0.012	0.1868
7	0.004	0.1570	0.006	0.1630	0.008	0.1610	0.012	0.1690
8	0.004	0.1412	0.006	0.1472	0.008	0.1452	0.012	0.1532
9	0.004	0.1270	0.006	0.1330	0.008	0.1310	0.012	0.1390

(mm)

AWG Size	Two Tape Thicknesses				Three Tape Thicknesses			
	Nom. Tape = 0.002"		Nom. Tape = 0.003"		Nom. Tape = 0.002"		Nom. Tape = 0.003"	
	Minimum Increase	Maximum Overall	Minimum Increase	Maximum Overall	Minimum Increase	Maximum Overall	Minimum Increase	Maximum Overall
4/0	0.102	12.106	0.152	12.258	0.203	12.207	0.305	12.410
3/0	0.102	10.813	0.152	10.965	0.203	10.914	0.305	11.118
2/0	0.102	9.662	0.152	9.815	0.203	9.764	0.305	9.967
1/0	0.102	8.639	0.152	8.791	0.203	8.740	0.305	8.943
1	0.102	7.727	0.152	7.879	0.203	7.828	0.305	8.031
2	0.102	6.914	0.152	7.066	0.203	7.015	0.305	7.219
3	0.102	6.190	0.152	6.342	0.203	6.292	0.305	6.495
4	0.102	5.519	0.152	5.672	0.203	5.621	0.305	5.824
5	0.102	4.948	0.152	5.100	0.203	5.050	0.305	5.253
6	0.102	4.440	0.152	4.592	0.203	4.542	0.305	4.745
7	0.102	3.988	0.152	4.140	0.203	4.089	0.305	4.293
8	0.102	3.586	0.152	3.739	0.203	3.688	0.305	3.891
9	0.102	3.226	0.152	3.378	0.203	3.327	0.305	3.531

NOTE–The maximum overall diameters have been calculated in accordance with the following:

© Copyright 2005 by the National Electrical Manufacturers Association.

Copyright National Electrical Manufacturers Association
Provided by IHS under license with NEMA
No reproduction or networking permitted without license from IHS
Not for Resale

MW 62-C
AROMATIC POLYIMIDE TAPE COVERED RECTANGULAR AND SQUARE COPPER MAGNET WIRE THERMAL CLASS 220

INSULATING MATERIALS: The insulating material shall be aromatic polyimide tape coated one or both sides with an adhesive layer of fluorinated ethylene propylene (FEP). The covering shall be one or two tapes wrapped spirally around the wire. After wrapping, the tape shall be heat sealed.

THERMAL CLASS: The temperature index shall meet or exceed 240ºC, as defined in Part 3, Clause 3.58.1.

GENERAL REQUIREMENTS: See Part 1; degree of overlapping and number of tapes as agreed upon between purchaser and supplier.

Properties	Procedure, Part 3, Clause	Requirement
DIMENSIONS	3.2.2.2	a. Dimensions and radii: Rectangular Wire in accordance with Table 1-8 Square Wire in accordance with Table 1-11 b. Thickness and width tolerances: Rectangular Wire in accordance with Table 1-9 Square Wire in accordance with Table 1-12 c. Increase in thickness and width due to tape covering shall be as follows: Minimum Increase = $2(n_1T_{1min} + n_2T_{2min})$ Maximum Increase = $2[(n_1+1)T_{1max} +(n_2+1)T_{2max}]$ Where: n_1 = the minimum number of tape thicknesses per side (See 1.5.1) achieved using the specified degree of overlap for tape 1, the tape closest to the conductor. For overlaps of 0 up to but not including 1/2, n_1=1 1/2 up to but not including 2/3, n_1=2 2/3 up to but not including 3/4, n_1=3 T_{1min} = minimum tape thickness including adhesive of tape 1. T_{1max} = maximum tape thickness including adhesive of tape 1. n_2, t_{2min} and T_{2max} = same as above for tape 2 when used NOTE 1 – The calculated maximum increase due to the polyimide tape covering may be exceeded provided the measured overall dimension of the covered wire does not exceed the sum of the specified maximum conductor thickness plus the maximum increase due to the covering. NOTE 2 – The number of tapes, the tape thickness, sides of application of FEP adhesive, and the degree of overlap shall be agreed upon between the user and supplier.
ADHERENCE AND FLEXIBILITY	3.3.6	No loss of adherence between tape to conductor or between layers of tape
ELONGATION	3.4	Not less than 32 percent for a thickness of 0.049 inch (1.25 mm) and greater, or 30 percent for a thickness of less than 0.049 inch (1.25 mm)
SPRINGBACK	3.7.2	Not greater than 5.5º
DIELECTRIC BREAKDOWN	3.8.2	Not less than 1000 Volts/mil (39370 V/mm) of the minimum thickness of paper covering on one side (one half the minimum increase)

© Copyright 2005 by the National Electrical Manufacturers Association.

Copyright National Electrical Manufacturers Association
Provided by IHS under license with NEMA
No reproduction or networking permitted without license from IHS
Not for Resale

MW 63-C
AROMATIC POLYIMIDE TAPE COVERED BARE ROUND COPPER MAGNET WIRE
THERMAL CLASS 220

INSULATING MATERIALS: The insulating material shall be aromatic polyimide tape coated one or both sides with an adhesive layer of fluorinated ethylene propylene (FEP). The covering shall be one or two tapes wrapped spirally around the wire. After wrapping, the tape shall be heat sealed.

THERMAL CLASS: The temperature index shall meet or exceed 240ºC, as defined in Part 3, Clause 3.58.1.

GENERAL REQUIREMENTS: See Part 1—This standard is based on one or two tape layers. The degree of overlapping and tape thickness shall be agreed upon between purchaser and supplier.

Properties	Procedure, Part 3, Clause	Requirement
DIMENSIONS	3.2.1.3	Bare Wire 4–14 AWG in accordance with Table 1-1 Tape Covered Wire in accordance with Table TR (MW 63-C) The increase in dimensions due to the tape covering shall be as follows: Minimum increase = $2\ (n_1T_{1min} + n_2T_{2min})$ Maximum increase = $2[(n_1+1)T_{1max} + (n_2+1)T_{2max}]$ Where: n_1 = the minimum number of tape thicknesses per side, achieved using the specified degree of overlap for tape 1, the tape closest to the conductor (See 1.5.1). For overlaps of 0 up to 1/2, n=1 For overlaps of 1/2 up to 2/3, n=2 T_{1min} = min. tape thickness including adhesive of tape 1. T_{1max} = max. tape thickness including adhesive of tape 1. n_2, T_{2min} and T_{2max} = same as above for tape 2 when used. NOTE 1 – The calculated maximum increase due to the polyimide tape covering may be exceeded provided the measured overall diameter of the covered wire does not exceed the sum of the nominal conductor diameter + 1% plus the maximum increase due to the covering. NOTE 2 – The number of tapes, the tape thickness, sides of application of FEP adhesive, and the degree of overlap shall be agreed upon between the user and supplier.
ADHERENCE AND FLEXIBILITY	3.3.4	No loss of adherence between tape to conductor or between layers of tape
ELONGATION	3.4	Not less than 30 percent.
SPRINGBACK	3.7.2	Not greater than 5.5 degrees
DIELECTRIC BREAKDOWN	3.8.2	Not less than 1000 Volts/mil (39370 V/mm) of the minimum thickness of tape covering on one side (one half the minimum increase)

TABLE TR (MW 63-C)
INSULATED WIRE DIMENSIONS
(Based on .0015 inch, ±10% thick tape; .0010 inch tape thickness, with .0005 inch adhesive one side)

One Tape Layer								Two Tape Layers							
Minimum Additional Increase, Overlap				Maximum Additional Increase, Overlap				Minimum Additional Increase, Overlap				Maximum Additional Increase, Overlap			
0 up to 1/2		1/2 up to 2/3		0 up to 1/2		1/2 up to 2/3		0 up to 1/2		1/2 up to 2/3		0 up to 1/2		1/2 up to 2/3	
inch	mm	inch	mm	inch	mm	inch	mm	inch	mm	inch	mm	inch	mm	inch	mm
.0026	.066	.0052	.132	.0064	0.16	.0096	0.24	.0052	.132	.0104	.264	.0128	0.33	.0192	0.49

NOTE—Max. OD = maximum bare wire diameter + maximum addition.

© Copyright 2005 by the National Electrical Manufacturers Association.

Copyright National Electrical Manufacturers Association
Provided by IHS under license with NEMA
No reproduction or networking permitted without license from IHS
Not for Resale

MW 72-C
POLYESTER (AMIDE)(IMIDE) FILM INSULATED ROUND COPPER MAGNET WIRE FOR HERMETIC APPLICATIONS, THERMAL CLASS 180

INSULATING MATERIAL The coating is based on polyester (amide)(imide) resins (1.4.2).

THERMAL CLASS 180 as defined in Part 1, Clause 1.8, and when tested in accordance with Part 3, Clause 3.58.1.

GENERAL REQUIREMENTS See Part 1.

Properties	Procedure, Part 3, Clause	Requirement
DIMENSIONS	3.2.1.1	Heavy 14–30 AWG in accordance with Table 1-1
ADHERENCE AND FLEXIBILITY	3.3.1	No cracks visible in the film coating
ELONGATION	3.4	Not less than value in Table 3.4.2
HEAT SHOCK	3.5	No cracks visible in the film coating after conditioning at 200°C
SPRINGBACK	3.7.1	Not greater than the value in Table 3.7.1
DIELECTRIC BREAKDOWN	3.8.3	Not less than the value in Table 3.8.3.2
CONTINUITY	3.9.2	Max number of discontinuities in accordance with Table 3.9.2.1
PERIODIC CONFORMANCE TESTS		
THERMOPLASTIC FLOW	3.50	Median not less than 300°C
SOLUBILITY	3.51	Specimens immersed in xylene and 50/50 xylene/butyl Cellosolve shall not soften sufficiently to expose the bare conductor
DIELECTRIC BREAKDOWN AT RATED TEMPERATURE	3.52	Average not less than 75% of the value in Table 3.8.3.2
REFREIGERANT 22 EXTRACTION	3.55	Not greater than 0.25 percent of the weight of the film insulation
RETAINED DIELECTRIC AFTER R-22 CONDITIONING	3.56	18 AWG Heavy Build specimens shall average not less than 5700 V
SCRAPE RESISTANCE	3.59	Lowest "grams-to-fail" load for any one of the three tests and the average of the three tests shall not be less than the values in Table 3.59.1

© Copyright 2005 by the National Electrical Manufacturers Association.

Copyright National Electrical Manufacturers Association
Provided by IHS under license with NEMA
No reproduction or networking permitted without license from IHS
Not for Resale

MW 73-A
POLYESTER (AMIDE) (IMIDE) OVERCOATED WITH POLYAMIDEIMIDE FILM INSULATED ROUND ALUMINUM MAGNET WIRE FOR HERMETIC APPLICATIONS, THERMAL CLASS 220

INSULATING MATERIAL The conductor shall be coated with a dual film. The underlying coating is based on polyester (amide)(imide) resins (1.4.2). The superimposed coating is based on polyamideimide resins (1.4.2).

THERMAL CLASS 220 as defined in Part 1, Clause 1.8, and when tested in accordance with Part 3, Clause 3.58.1.

GENERAL REQUIREMENTS See Part 1.

Properties	Procedure, Part 3, Clause	Requirement
DIMENSIONS	3.2.1.1	Heavy 12–28 AWG in accordance with Table 1-1
ADHERENCE AND FLEXIBILITY	3.3.1	No cracks visible in the film coating
ELONGATION	3.4	Not less than value in Table 3.4.2
HEAT SHOCK	3.5	No cracks visible in the film coating after conditioning at 240°C
DIELECTRIC BREAKDOWN	3.8.3	Not less than the value in Table 3.8.3.2
CONTINUITY	3.9.2	Max number of discontinuities in accordance with Table 3.9.2.1
PERIODIC CONFORMANCE TESTS		
SOLUBILITY	3.51	Specimens immersed in xylene and 50/50 xylene/butyl Cellosolve shall not soften sufficiently to expose the bare conductor
DIELECTRIC BREAKDOWN AT RATED TEMPERATURE	3.52	Average not less than 75% of value in Table 3.8.3.2
REFREIGERANT 22 EXTRACTION	3.55	Not greater than 0.25 percent of the weight of the film insulation
RETAINED DIELECTRIC AFTER R-22 CONDITIONING	3.56	18 AWG Heavy Build specimens shall average not less than 5700 V
SCRAPE RESISTANCE	3.59	Lowest "grams-to-fail" load for any one of the three tests and the average of the three tests shall not be less than the values in Table 3.59.1

© Copyright 2005 by the National Electrical Manufacturers Association.

Copyright National Electrical Manufacturers Association
Provided by IHS under license with NEMA
No reproduction or networking permitted without license from IHS
Not for Resale

MW 73-C
POLYESTER (AMIDE) (IMIDE) OVERCOATED WITH POLYAMIDEIMIDE FILM INSULATED ROUND COPPER MAGNET WIRE FOR HERMETIC APPLICATIONS, THERMAL CLASS 200

INSULATING MATERIAL The conductor shall be coated with a dual film. The underlying coating is based on polyester (amide)(imide) resins (1.4.2). The superimposed coating is based on polyamideimide resins (1.4.2).

THERMAL CLASS 200 as defined in Part 1, Clause 1.8, and when tested in accordance with Part 3, Clause 3.58.1.

GENERAL REQUIREMENTS See Part 1.

Properties	Procedure, Part 3, Clause	Requirement
DIMENSIONS	3.2.1.1	Heavy and Quad 14–30 AWG in accordance with Table 1-1
ADHERENCE AND FLEXIBILITY	3.3.1	No cracks visible in the film coating
ELONGATION	3.4	Not less than value in Table 3.4.2
HEAT SHOCK	3.5	No cracks visible in the film coating after conditioning at 220°C
SPRINGBACK	3.7.1	Not greater than the value in Table 3.7.1
DIELECTRIC BREAKDOWN	3.8.3	Not less than the value in Table 3.8.3.2
CONTINUITY	3.9.2	Max number of discontinuities in accordance with Table 3.9.2.1
PERIODIC CONFORMANCE TESTS		
THERMOPLASTIC FLOW	3.50	Median not less than 300ºC
SOLUBILITY	3.51	Specimens immersed in xylene and 50/50 xylene/butyl Cellosolve shall not soften sufficiently to expose the bare conductor
DIELECTRIC BREAKDOWN AT RATED TEMPERATURE	3.52	Average not less than 75% of value in Table 3.8.3.2
REFRIGERANT 22 EXTRACTION	3.55	Not greater than 0.25 percent of the weight of the film insulation
RETAINED DIELECTRIC AFTER R-22 CONDITIONING	3.56	18 AWG Heavy Build specimens shall average not less than 5700 V
SCRAPE RESISTANCE	3.59	Lowest "grams-to-fail" load for any one of the three tests and the average of the three tests shall not be less than the values in Table 3.59.1

© Copyright 2005 by the National Electrical Manufacturers Association.

Copyright National Electrical Manufacturers Association
Provided by IHS under license with NEMA
No reproduction or networking permitted without license from IHS
Not for Resale

MW 74-A
POLYESTER (AMIDE) (IMIDE), FILM INSULATED ROUND ALUMINUM MAGNET WIRE THERMAL CLASS 220

INSULATING MATERIAL The conductor is based on polyester (amide)(imide) resins (1.4.2).

THERMAL CLASS 220 as defined in Part 1, Clause 1.8, and when tested in accordance with Part 3, Clause 3.58.1.

GENERAL REQUIREMENTS See Part 1.

Properties	Procedure, Part 3, Clause	Requirement
DIMENSIONS	3.2.1.1	Single 14–24 AWG; Heavy 4–24 AWG in accordance with Table 1-1
ADHERENCE AND FLEXIBILITY	3.3.1	No cracks visible in the film coating
ELONGATION	3.4	Not less than value in Table 3.4.2
HEAT SHOCK	3.5	No cracks visible in the film coating after conditioning at 240°C
DIELECTRIC BREAKDOWN	3.8.2 3.8.3	4–7 AWG Not less than the value in Table 3.8.2 8–24 AWG Not less than the value in Table 3.8.3.2
CONTINUITY	3.9.2	14–24 AWG Max number of discontinuities in accordance with Table 3.9.2.1
PERIODIC CONFORMANCE TESTS		
SOLUBILITY	3.51	Specimens immersed in xylene and 50/50 xylene/butyl Cellosolve shall not soften sufficiently to expose the bare conductor
DIELECTRIC BREAKDOWN AT RATED TEMPERATURE	3.52	Average not less than 75% of the value in Table 3.8.3.2
SCRAPE RESISTANCE	3.59	Lowest "grams-to-fail" load for any one of the three tests and the average of the three tests shall not be less than the values in Table 3.59.1

© Copyright 2005 by the National Electrical Manufacturers Association.

Copyright National Electrical Manufacturers Association
Provided by IHS under license with NEMA
No reproduction or networking permitted without license from IHS
Not for Resale

MW 74-C
POLYESTER (AMIDE) (IMIDE), FILM INSULATED ROUND COPPER MAGNET WIRE THERMAL CLASS 200

INSULATING MATERIAL The conductor is based on polyester (amide)(imide) resins (1.4.2).

THERMAL CLASS 200 as defined in Part 1, Clause 1.8, and when tested in accordance with Part 3, Clause 3.58.1.

GENERAL REQUIREMENTS See Part 1.

Properties	Procedure, Part 3, Clause	Requirement
DIMENSIONS	3.2.1.1	Single 14–56 AWG; Heavy 4–50 AWG in accordance with Table 1-1
ADHERENCE AND FLEXIBILITY	3.3.1	No cracks visible in the film coating
ELONGATION	3.4	Not less than value in Table 3.4.2
HEAT SHOCK	3.5	No cracks visible in the film coating after conditioning at 220°C
SPRINGBACK	3.7.1 3.7.2	14–30 AWG Not greater than the value in Table 3.7.1 4–13 AWG Not greater than 5°
DIELECTRIC BREAKDOWN	3.8.2 3.8.3 3.8.7	4–9 AWG Not less than the value in Table 3.8.2 10–37 AWG Not less than the value in Table 3.8.3.2 38–56 AWG Not less than the value in Table 3.8.7.3
CONTINUITY	3.9.2 3.9.3	14–44 AWG Max number of discontinuities in accordance with Table 3.9.2.1 45–56 AWG Max number of discontinuities in accordance with Table 3.9.3
PERIODIC CONFORMANCE TESTS		
THERMOPLASTIC FLOW	3.50	Median not less than 300°C
SOLUBILITY	3.51	Specimens immersed in xylene and 50/50 xylene/butyl Cellosolve shall not soften sufficiently to expose the bare conductor
DIELECTRIC BREAKDOWN AT RATED TEMPERATURE	3.52	Average not less than 75% of the value in Table 3.8.3.2
SCRAPE RESISTANCE	3.59	Lowest "grams-to-fail" load for any one of the three tests and the average of the three tests shall not be less than the values in Table 3.59.1

© Copyright 2005 by the National Electrical Manufacturers Association.

Copyright National Electrical Manufacturers Association
Provided by IHS under license with NEMA
No reproduction or networking permitted without license from IHS
Not for Resale

MW 75-C
POLYURETHANE, FILM INSULATED ROUND COPPER MAGNET WIRE FOR SOLDERABLE APPLICATIONS THERMAL CLASS 130

INSULATING MATERIAL The coating is based on polyurethane resins (1.4.2).

THERMAL CLASS 130 as defined in Part 1, Clause 1.8, and when tested in accordance with Part 3, Clause 3.58.1.

GENERAL REQUIREMENTS See Part 1.

Properties	Procedure, Part 3, Clause	Requirement
DIMENSIONS	3.2.1.1	Single 25–56 AWG; Heavy 25–50 AWG in accordance with Table 1-1
ADHERENCE AND FLEXIBILITY	3.3.1	No cracks visible in the film coating
ELONGATION	3.4	Not less than value in Table 3.4.2
HEAT SHOCK	3.5	No cracks visible in the film coating after conditioning at 175°C, Exception—use 6d mandrel for all sizes
SPRINGBACK	3.7.1	25–30 AWG Not greater than the value in Table 3.7.1
DIELECTRIC BREAKDOWN	3.8.3 3.8.7	25–37 AWG Not less than the value in Table 3.8.3.2 38–56 AWG Not less than the value in Table 3.8.7.3
CONTINUITY	3.9.2 3.9.3	25–44 AWG Max number of discontinuities in accordance with Table 3.9.2.1 45–56 AWG Max number of discontinuities in accordance with Table 3.9.3
SOLDERABILITY	3.13	Covered with continuous film of solder after immersion within the time specified at 360ºC:
PERIODIC CONFORMANCE TESTS		
THERMOPLASTIC FLOW	3.50	Median not less than 200°C
SOLUBILITY	3.51	Specimens immersed in xylene shall not soften sufficiently to expose the bare conductor
DIELECTRIC BREAKDOWN AT RATED TEMPERATURE	3.52	Average not less than 75% of the value in Table 3.8.3.2
SCRAPE RESISTANCE	3.59	Lowest "grams-to-fail" load for any one of the three tests and the average of the three tests shall not be less than the values in Table 3.59.2

AWG Size	Single and Heavy
25–29	6 seconds
30–36	5 seconds
37–46	4 seconds
47–56	3 seconds

--`,,```,,,,````-`-`,,`,,`,`,,`-© Copyright 2005 by the National Electrical Manufacturers Association.

Copyright National Electrical Manufacturers Association
Provided by IHS under license with NEMA
No reproduction or networking permitted without license from IHS
Not for Resale

MW 76-A
POLYESTER (AMIDE) (IMIDE) OVERCOATED WITH POLYAMIDE FILM INSULATED ROUND ALUMINUM MAGNET WIRE THERMAL CLASS 180

INSULATING MATERIAL The conductor shall be coated with a dual film. The underlying coating is based on polyester (amide)(imide) resins (1.4.2). The superimposed insulation is based on polyamide resins (1.4.2).

THERMAL CLASS 180 as defined in Part 1, Clause 1.8, and when tested in accordance with Part 3, Clause 3.58.1.

GENERAL REQUIREMENTS See Part 1.

Properties	Procedure, Part 3, Clause	Requirement
DIMENSIONS	3.2.1.1	Single 14–30 AWG; Heavy 10–24 AWG in accordance with Table 1-1
ADHERENCE AND FLEXIBILITY	3.3.1	No cracks visible in the film coating
ELONGATION	3.4	Not less than value in Table 3.4.2
HEAT SHOCK	3.5	No cracks visible in the film coating after conditioning at 200°C
DIELECTRIC BREAKDOWN	3.8.3	Not less than the value in Table 3.8.3.2
CONTINUITY	3.9.2	Max number of discontinuities in accordance with Table 3.9.2.1
PERIODIC CONFORMANCE TESTS		
SOLUBILITY	3.51	Specimens immersed in xylene and 50/50 xylene/butyl Cellosolve shall not soften sufficiently to expose the bare conductor
DIELECTRIC BREAKDOWN AT RATED TEMPERATURE	3.52	Average not less than 75% of the value in Table 3.8.3.2
SCRAPE RESISTANCE	3.59	Lowest "grams-to-fail" load for any one of the three tests and the average of the three tests shall not be less than the values in Table 3.59.1

© Copyright 2005 by the National Electrical Manufacturers Association.

Copyright National Electrical Manufacturers Association
Provided by IHS under license with NEMA
No reproduction or networking permitted without license from IHS
Not for Resale

MW 76-C
POLYESTER (AMIDE) (IMIDE) OVERCOATED WITH POLYAMIDE FILM INSULATED ROUND COPPER MAGNET WIRE THERMAL CLASS 180

INSULATING MATERIAL The conductor shall be coated with a dual film. The underlying coating is based on polyester (amide)(imide) resins (1.4.2). The superimposed insulation is based on polyamide resins (1.4.2).

THERMAL CLASS 180 as defined in Part 1, Clause 1.8, and when tested in accordance with Part 3, Clause 3.58.1.

GENERAL REQUIREMENTS See Part 1.

Properties	Procedure, Part 3, Clause	Requirement
DIMENSIONS	3.2.1.1	Single 14–44 AWG; Heavy 10–44 AWG; Triple 14–30 AWG In accordance with Table 1-1
ADHERENCE AND FLEXIBILITY	3.3.1	No cracks visible in the film coating
ELONGATION	3.4	Not less than value in Table 3.4.2
HEAT SHOCK	3.5	No cracks visible in the film coating after conditioning at 200°C
SPRINGBACK	3.7.1 3.7.2	14–30 AWG Not greater than the value in Table 3.7.1 10–13 AWG Not greater than 5°
DIELECTRIC BREAKDOWN	3.8.3 3.8.7	10–37 AWG Not less than the value in Table 3.8.3.2 38–44 AWG Not less than the value in Table 3.8.7.3
CONTINUITY	3.9.2	14–44 AWG Max number of discontinuities in accordance with Table 3.9.2.1
PERIODIC CONFORMANCE TESTS		
THERMOPLASTIC FLOW	3.50	Median not less than 225°C
SOLUBILITY	3.51	Specimens immersed in xylene and 50/50 xylene/butyl Cellosolve shall not soften sufficiently to expose the bare conductor
DIELECTRIC BREAKDOWN AT RATED TEMPERATURE	3.52	Average not less than 75% of the value in Table 3.8.3.2
SCRAPE RESISTANCE	3.59	Lowest "grams-to-fail" load for any one of the three tests and the average of the three tests shall not be less than the values in Table 3.59.1

© Copyright 2005 by the National Electrical Manufacturers Association.

Copyright National Electrical Manufacturers Association
Provided by IHS under license with NEMA
No reproduction or networking permitted without license from IHS
Not for Resale

MW 77-C
POLYESTER (IMIDE) FILM INSULATED ROUND COPPER MAGNET WIRE FOR SOLDERABLE APPLICATIONS, THERMAL CLASS 180

INSULATING MATERIAL The coating is based on polyester (imide) resins (1.4.2).

THERMAL CLASS 180 as defined in Part 1, Clause 1.8, and when tested in accordance with Part 3, Clause 3.58.1.

GENERAL REQUIREMENTS See Part 1.

Properties	Procedure, Part 3, Clause	Requirement
DIMENSIONS	3.2.1.1	Single and Heavy 25–56 AWG in accordance with Table 1-1
ADHERENCE AND FLEXIBILITY	3.3.1	No cracks visible in the film coating
ELONGATION	3.4	Not less than value in Table 3.4.2
HEAT SHOCK	3.5	No cracks visible in the film coating after conditioning at 200°C
SPRINGBACK	3.7.1	25–30 AWG Not greater than the value in Table 3.7.1
DIELECTRIC BREAKDOWN	3.8.3 3.8.7	25–37 AWG Not less than the value in Table 3.8.3.2 38–56 AWG Not less than the value in Table 3.8.7.3
CONTINUITY	3.9.2 3.9.3	25–44 AWG Max number of discontinuities in accordance with Table 3.9.2.1 45–56 AWG Max number of discontinuities in accordance with Table 3.9.3
SOLDERABILITY	3.13	Covered with continuous film of solder after immersion within the time specified at 470ºC:
PERIODIC CONFORMANCE TESTS		
THERMOPLASTIC FLOW	3.50	Median not less than 225°C
SOLUBILITY	3.51	Specimens immersed in xylene shall not soften sufficiently to expose the bare conductor
DIELECTRIC BREAKDOWN AT RATED TEMPERATURE	3.52	Average not less than 75% of the value in Table 3.8.3.2
SCRAPE RESISTANCE	3.59	Lowest "grams-to-fail" load for any one of the three tests and the average of the three tests shall not be less than the values in Table 3.59.2

AWG Size	Single	Heavy
25–29	6 seconds	6 seconds
30–36	5 seconds	5 seconds
37–46	4 seconds	4 seconds
47–56	3 seconds	4 seconds

© Copyright 2005 by the National Electrical Manufacturers Association.

Copyright National Electrical Manufacturers Association
Provided by IHS under license with NEMA
No reproduction or networking permitted without license from IHS
Not for Resale

MW 78-C
POLYESTER (IMIDE) OVERCOATED WITH POLYAMIDE, FILM INSULATED ROUND COPPER MAGNET WIRE FOR SOLDERABLE APPLICATIONS, THERMAL CLASS 180

INSULATING MATERIAL The conductor shall be coated with dual film. The underlying coating is based on polyester (imide) resins (1.4.2). The superimposed coating is based on polyamide resins (1.4.2).

THERMAL CLASS 180 as defined in Part 1, Clause 1.8, and when tested in accordance with Part 3, Clause 3.58.1.

GENERAL REQUIREMENTS See Part 1.

Properties	Procedure, Part 3, Clause	Requirement
DIMENSIONS	3.2.1.1	Single and Heavy 14–44 AWG in accordance with Table 1-1
ADHERENCE AND FLEXIBILITY	3.3.1	No cracks visible in the film coating
ELONGATION	3.4	Not less than value in Table 3.4.2
HEAT SHOCK	3.5	No cracks visible in the film coating after conditioning at 200°C
SPRINGBACK	3.7.1	14–30 AWG Not greater than the value in Table 3.7.1
DIELECTRIC BREAKDOWN	3.8.3 3.8.7	14–37 AWG Not less than the value in Table 3.8.3.2 38–44 AWG Not less than the value in Table 3.8.7.3
CONTINUITY	3.9.2	14–44 AWG Max number of discontinuities in accordance with Table 3.9.2.1
SOLDERABILITY	3.13	Covered with continuous film of solder after immersion within the time specified at 470ºC:
PERIODIC CONFORMANCE TESTS		
THERMOPLASTIC FLOW	3.50	Median not less than 200°C
SOLUBILITY	3.51	Specimens immersed in xylene shall not soften sufficiently to expose the bare conductor
DIELECTRIC BREAKDOWN AT RATED TEMPERATURE	3.52	Average not less than 75% of the value in Table 3.8.3.2
SCRAPE RESISTANCE	3.59	Lowest "grams-to-fail" load for any one of the three tests and the average of the three tests shall not be less than the values in Table 3.59.2

AWG Size	Single and Heavy
14–15	10 seconds
16–19	8 seconds
20–29	6 seconds
30–36	5 seconds
37–44	4 seconds

© Copyright 2005 by the National Electrical Manufacturers Association.

--`,,```,,,,````-`-`,,`,,`,`,,`---

Copyright National Electrical Manufacturers Association
Provided by IHS under license with NEMA
No reproduction or networking permitted without license from IHS

Not for Resale

MW 79-C
POLYURETHANE FILM INSULATED ROUND COPPER MAGNET WIRE FOR SOLDERABLE APPLICATIONS THERMAL CLASS 155

INSULATING MATERIAL The coating is based on polyurethane resins (1.4.2).

THERMAL CLASS 155 as defined in Part 1, Clause 1.8, and when tested in accordance with Part 3, Clause 3.58.1.

GENERAL REQUIREMENTS See Part 1.

<table>
<tr><th>Properties</th><th>Procedure, Part 3, Clause</th><th>Requirement</th></tr>
<tr><td>DIMENSIONS</td><td>3.2.1.1</td><td>Single 25–56 AWG; Heavy 25–50 AWG; Triple 25–44 AWG
in accordance with Table 1-1</td></tr>
<tr><td>ADHERENCE AND FLEXIBILITY</td><td>3.3.1</td><td>No cracks visible in the film coating</td></tr>
<tr><td>ELONGATION</td><td>3.4</td><td>Not less than value in Table 3.4.2</td></tr>
<tr><td>HEAT SHOCK</td><td>3.5</td><td>No cracks visible in the film coating after conditioning at 175°C</td></tr>
<tr><td>SPRINGBACK</td><td>3.7.1</td><td>25–30 AWG Not greater than the value in Table 3.7.1</td></tr>
<tr><td>DIELECTRIC BREAKDOWN</td><td>3.8.3
3.8.7</td><td>25–37 AWG Not less than the value in Table 3.8.3.2
38–56 AWG Not less than the value in Table 3.8.7.3</td></tr>
<tr><td>CONTINUITY</td><td>3.9.2
3.9.3</td><td>25–44 AWG Max number of discontinuities in accordance with Table 3.9.2.1
45–56 AWG Max number of discontinuities in accordance with Table 3.9.3</td></tr>
<tr><td>SOLDERABILITY</td><td>3.13</td><td>Covered with continuous film of solder after immersion within the time and at the temperature specified:
<table>
<tr><th>AWG Size</th><th>Temperature</th><th>Single</th><th>Heavy</th><th>Triple</th></tr>
<tr><td>25–29</td><td>390ºC</td><td>4 seconds</td><td>5 seconds</td><td>5 seconds</td></tr>
<tr><td>30–36</td><td>390ºC</td><td>4 seconds</td><td>5 seconds</td><td>5 seconds</td></tr>
<tr><td>37–46</td><td>390ºC</td><td>3 seconds</td><td>4 seconds</td><td>4 seconds</td></tr>
<tr><td>47–56</td><td>360ºC</td><td>2 seconds</td><td>3 seconds</td><td>—</td></tr>
</table></td></tr>
<tr><td colspan="3">PERIODIC CONFORMANCE TESTS</td></tr>
<tr><td>THERMOPLASTIC FLOW</td><td>3.50</td><td>Median not less than 200°C</td></tr>
<tr><td>SOLUBILITY</td><td>3.51</td><td>Specimens immersed in xylene shall not soften sufficiently to expose the bare conductor</td></tr>
<tr><td>DIELECTRIC BREAKDOWN AT RATED TEMPERATURE</td><td>3.52</td><td>Average not less than 75% of the value in Table 3.8.3.2</td></tr>
<tr><td>SCRAPE RESISTANCE</td><td>3.59</td><td>Lowest "grams-to-fail" load for any one of the three tests and the average of the three tests shall not be less than the values in Table 3.59.2</td></tr>
</table>

© Copyright 2005 by the National Electrical Manufacturers Association.

Copyright National Electrical Manufacturers Association
Provided by IHS under license with NEMA
No reproduction or networking permitted without license from IHS
Not for Resale

MW 80-A
POLYURETHANE OVERCOATED WITH POLYAMIDE FILM INSULATED ROUND ALUMINUM MAGNET WIRE FOR SOLDERABLE APPLICATIONS, THERMAL CLASS 155

INSULATING MATERIAL The conductor shall be coated with a dual film. The underlying insulation is based on polyurethane resins (1.4.2). The superimposed coating is based on polyamide resins (1.4.2).

THERMAL CLASS 155 as defined in Part 1, Clause 1.8, and when tested in accordance with Part 3, Clause 3.58.1.

GENERAL REQUIREMENTS See Part 1.

Properties	Procedure, Part 3, Clause	Requirement
DIMENSIONS	3.2.1.1	Single and Heavy 14–30 AWG in accordance with Table 1-1
ADHERENCE AND FLEXIBILITY	3.3.1	No cracks visible in the film coating
ELONGATION	3.4	Not less than value in Table 3.4.2
HEAT SHOCK	3.5	No cracks visible in the film coating after conditioning at 175°C
DIELECTRIC BREAKDOWN	3.8.3	Not less than the value in Table 3.8.3.2
CONTINUITY	3.9.2	Max number of discontinuities in accordance with Table 3.9.2.1
SOLDERABILITY	3.13	Insulation completely removed after immersion within the time and at the temperature specified AWG Size / Temperature / Single and Heavy 14–19 / 430ºC / 10 seconds 20–23 / 430ºC / 8 seconds 24–30 / 390ºC / 6 seconds
PERIODIC CONFORMANCE TESTS		
SOLUBILITY	3.51	Specimens immersed in xylene shall not soften sufficiently to expose the bare conductor
DIELECTRIC BREAKDOWN AT RATED TEMPERATURE	3.52	Average not less than 75% of the value in Table 3.8.3.2
SCRAPE RESISTANCE	3.59	Lowest "grams-to-fail" load for any one of the three tests and the average of the three tests shall not be less than the values in Table 3.59.1

© Copyright 2005 by the National Electrical Manufacturers Association.

Copyright National Electrical Manufacturers Association
Provided by IHS under license with NEMA
No reproduction or networking permitted without license from IHS
Not for Resale

MW 80-C
POLYURETHANE OVERCOATED WITH POLYAMIDE FILM INSULATED ROUND COPPER MAGNET WIRE FOR SOLDERABLE APPLICATIONS, THERMAL CLASS 155

INSULATING MATERIAL The conductor shall be coated with a dual film. The underlying insulation is based on polyurethane resins (1.4.2). The superimposed coating is based on polyamide resins (1.4.2).

THERMAL CLASS 155 as defined in Part 1, Clause 1.8, and when tested in accordance with Part 3, Clause 3.58.1.

GENERAL REQUIREMENTS See Part 1.

<table>
<tr><th>Properties</th><th>Procedure, Part 3, Clause</th><th>Requirement</th></tr>
<tr><td>DIMENSIONS</td><td>3.2.1.1</td><td>Single, Heavy and Triple 14–44 AWG in accordance with Table 1-1</td></tr>
<tr><td>ADHERENCE AND FLEXIBILITY</td><td>3.3.1</td><td>No cracks visible in the film coating</td></tr>
<tr><td>ELONGATION</td><td>3.4</td><td>Not less than value in Table 3.4.2</td></tr>
<tr><td>HEAT SHOCK</td><td>3.5</td><td>No cracks visible in the film coating after conditioning at 175°C</td></tr>
<tr><td>SPRINGBACK</td><td>3.7.1</td><td>Not greater than the value in Table 3.7.1</td></tr>
<tr><td>DIELECTRIC BREAKDOWN</td><td>3.8.3
3.8.7</td><td>14–37 AWG Not less than the value in Table 3.8.3.2
38–44 AWG Not less than the value in Table 3.8.7.3</td></tr>
<tr><td>CONTINUITY</td><td>3.9.2</td><td>Max number of discontinuities in accordance with Table 3.9.2.1</td></tr>
<tr><td>SOLDERABILITY</td><td>3.13</td><td>Covered with continuous film of solder after immersion within the time and at the temperature specified
<table>
<tr><th>AWG Size</th><th>Temperature</th><th>Single</th><th>Heavy</th><th>Triple</th></tr>
<tr><td>14–19</td><td>430ºC</td><td>8 seconds</td><td>10 seconds</td><td>12 seconds</td></tr>
<tr><td>20–23</td><td>430ºC</td><td>6 seconds</td><td>8 seconds</td><td>9 seconds</td></tr>
<tr><td>24–29</td><td>390ºC</td><td>4 seconds</td><td>5 seconds</td><td>6 seconds</td></tr>
<tr><td>30–36</td><td>390ºC</td><td>4 seconds</td><td>5 seconds</td><td>5 seconds</td></tr>
<tr><td>37–44</td><td>390ºC</td><td>3 seconds</td><td>4 seconds</td><td>5 seconds</td></tr>
</table></td></tr>
<tr><td colspan="3">PERIODIC CONFORMANCE TESTS</td></tr>
<tr><td>THERMOPLASTIC FLOW</td><td>3.50</td><td>Median not less than 200°C</td></tr>
<tr><td>SOLUBILITY</td><td>3.51</td><td>Specimens immersed in xylene shall not soften sufficiently to expose the bare conductor</td></tr>
<tr><td>DIELECTRIC BREAKDOWN AT RATED TEMPERATURE</td><td>3.52</td><td>Average not less than 75% of the value in Table 3.8.3.2</td></tr>
<tr><td>SCRAPE RESISTANCE</td><td>3.59</td><td>Lowest "grams-to-fail" load for any one of the three tests and the average of the three tests shall not be less than the values in Table 3.59.1</td></tr>
</table>

© Copyright 2005 by the National Electrical Manufacturers Association.

Copyright National Electrical Manufacturers Association
Provided by IHS under license with NEMA
No reproduction or networking permitted without license from IHS Not for Resale

MW 81-C
POLYAMIDEIMIDE FILM INSULATED ROUND COPPER MAGNET WIRE
THERMAL CLASS 220

INSULATING MATERIAL The coating is based on polyamideimide resins (1.4.2).

THERMAL CLASS 220 as defined in Part 1, Clause 1.8, and when tested in accordance with Part 3, Clause 3.58.1.

GENERAL REQUIREMENTS See Part 1.

Properties	Procedure, Part 3, Clause	Requirement
DIMENSIONS	3.2.1.1	Single 14–44 AWG; Heavy 4–44 AWG in accordance with Table 1-1
ADHERENCE AND FLEXIBILITY	3.3.1	No cracks visible in the film coating
ELONGATION	3.4	Not less than value in Table 3.4.2
HEAT SHOCK	3.5	No cracks visible in the film coating after conditioning at 240°C
SPRINGBACK	3.7.1 3.7.2	14–44 AWG Not greater than the value in Table 3.7.1 4–13 AWG Not greater than 5°
DIELECTRIC BREAKDOWN	3.8.2 3.8.3 3.8.7	4–9 AWG Not less than the value in Table 3.8.2 10–37 AWG Not less than the value in Table 3.8.3.2 38–44 AWG Not less than the value in Table 3.8.7.3
CONTINUITY	3.9.2	14–44 AWG Max number of discontinuities in accordance with Table 3.9.2.1
PERIODIC CONFORMANCE TESTS		
THERMOPLASTIC FLOW	3.50	Median not less than 350°C
SOLUBILITY	3.51	Specimens immersed in xylene and 50/50 xylene/butyl Cellosolve shall not soften sufficiently to expose the bare conductor
DIELECTRIC BREAKDOWN AT RATED TEMPERATURE	3.52	Average not less than 75% of the value in Table 3.8.3.2
SCRAPE RESISTANCE	3.59	Lowest "grams-to-fail" load for any one of the three tests and the average of the three tests shall not be less than the values in Table 3.59.1

© Copyright 2005 by the National Electrical Manufacturers Association.

Copyright National Electrical Manufacturers Association
Provided by IHS under license with NEMA
No reproduction or networking permitted without license from IHS
Not for Resale

MW 82-C
POLYURETHANE FILM INSULATED ROUND COPPER MAGNET WIRE FOR SOLDERABLE APPLICATIONS THERMAL CLASS 180

INSULATING MATERIAL The coating is based on polyurethane resins (1.4.2).

THERMAL CLASS 180 as defined in Part 1, Clause 1.8, and when tested in accordance with Part 3, Clause 3.58.1.

GENERAL REQUIREMENTS See Part 1.

<table>
<tr><th>Properties</th><th>Procedure, Part 3, Clause</th><th>Requirement</th></tr>
<tr><td>DIMENSIONS</td><td>3.2.1.1</td><td>Single 25–56 AWG, Heavy 25–50 AWG and Triple 30–44 AWG in accordance with Table 1-1</td></tr>
<tr><td>ADHERENCE AND FLEXIBILITY</td><td>3.3.1</td><td>No cracks visible in the film coating</td></tr>
<tr><td>ELONGATION</td><td>3.4</td><td>Not less than value in Table 3.4.2</td></tr>
<tr><td>HEAT SHOCK</td><td>3.5</td><td>No cracks visible in the film coating after conditioning at 200°C</td></tr>
<tr><td>SPRINGBACK</td><td>3.7.1</td><td>Not greater than the value in Table 3.7.1</td></tr>
<tr><td>DIELECTRIC BREAKDOWN</td><td>3.8.3
3.8.7</td><td>25–37 AWG Not less than the value in Table 3.8.3.2
38–56 AWG Not less than the value in Table 3.8.7.3</td></tr>
<tr><td>CONTINUITY</td><td>3.9.2
3.9.3</td><td>25–44 AWG Max number of discontinuities in accordance with Table 3.9.2.1
45–56 AWG Max number of discontinuities in accordance with Table 3.9.3</td></tr>
<tr><td>SOLDERABILITY</td><td>3.13</td><td>Covered with continuous film of solder after immersion within the time and at the temperature specified:
<table>
<tr><th>AWG Size</th><th>Temperature</th><th>Single</th><th>Heavy</th><th>Triple</th></tr>
<tr><td>25–29</td><td>390º</td><td>6 seconds</td><td>6 seconds</td><td>—</td></tr>
<tr><td>30–36</td><td>390º</td><td>5 seconds</td><td>5 seconds</td><td>5 seconds</td></tr>
<tr><td>37–46</td><td>390º</td><td>4 seconds</td><td>4 seconds</td><td>4 seconds</td></tr>
<tr><td>47–56</td><td>360º</td><td>3 seconds</td><td>3 seconds</td><td>—</td></tr>
</table></td></tr>
<tr><td colspan="3">PERIODIC CONFORMANCE TESTS</td></tr>
<tr><td>THERMOPLASTIC FLOW</td><td>3.50</td><td>Median not less than 225°C</td></tr>
<tr><td>SOLUBILITY</td><td>3.51</td><td>Specimens immersed in xylene shall not soften sufficiently to expose the bare conductor</td></tr>
<tr><td>DIELECTRIC BREAKDOWN AT RATED TEMPERATURE</td><td>3.52</td><td>Average not less than 75% of the value in Table 3.8.3.2</td></tr>
<tr><td>SCRAPE RESISTANCE</td><td>3.59</td><td>Lowest "grams-to-fail" load for any one of the three tests and the average of the three tests shall not be less than the values in Table 3.59.2</td></tr>
</table>

© Copyright 2005 by the National Electrical Manufacturers Association.

Copyright National Electrical Manufacturers Association
Provided by IHS under license with NEMA
No reproduction or networking permitted without license from IHS Not for Resale

MW 83-C
POLYURETHANE OVERCOATED WITH POLYAMIDE FILM INSULATED ROUND COPPER MAGNET WIRE FOR SOLDERABLE APPLICATIONS, THERMAL CLASS 180

INSULATING MATERIAL The conductor shall be coated with a dual film. The underlying insulation is based on polyurethane resins (1.4.2). The superimposed coating is based on polyamide resins (1.4.2).

THERMAL CLASS 180 as defined in Part 1, Clause 1.8, and when tested in accordance with Part 3, Clause 3.58.1.

GENERAL REQUIREMENTS See Part 1.

<table>
<tr><th>Properties</th><th>Procedure, Part 3, Clause</th><th>Requirement</th></tr>
<tr><td>DIMENSIONS</td><td>3.2.1.1</td><td>Single and Heavy 14–44 AWG, Triple 25–44 AWG in accordance with Table 1-1</td></tr>
<tr><td>ADHERENCE AND FLEXIBILITY</td><td>3.3.1</td><td>No cracks visible in the film coating</td></tr>
<tr><td>ELONGATION</td><td>3.4</td><td>Not less than value in Table 3.4.2</td></tr>
<tr><td>HEAT SHOCK</td><td>3.5</td><td>No cracks visible in the film coating after conditioning at 200°C</td></tr>
<tr><td>SPRINGBACK</td><td>3.7.1</td><td>Not greater than the value in Table 3.7.1</td></tr>
<tr><td>DIELECTRIC BREAKDOWN</td><td>3.8.3
3.8.7</td><td>14–37 AWG Not less than the value in Table 3.8.3.2
38–44 AWG Not less than the value in Table 3.8.7.3</td></tr>
<tr><td>CONTINUITY</td><td>3.9.2</td><td>Max number of discontinuities in accordance with Table 3.9.2.1</td></tr>
<tr><td>SOLDERABILITY</td><td>3.13</td><td>Covered with continuous film of solder after immersion for the time and temperature specified
<table>
<tr><th>AWG Size</th><th>Temperature</th><th>Single</th><th>Heavy</th><th>Triple</th></tr>
<tr><td>14–19</td><td>430ºC</td><td>10 seconds</td><td>10 seconds</td><td>—</td></tr>
<tr><td>20–23</td><td>430ºC</td><td>8 seconds</td><td>8 seconds</td><td>—</td></tr>
<tr><td>24–29</td><td>390ºC</td><td>6 seconds</td><td>6 seconds</td><td>6 seconds</td></tr>
<tr><td>30–36</td><td>390ºC</td><td>5 seconds</td><td>5 seconds</td><td>5 seconds</td></tr>
<tr><td>37–44</td><td>390ºC</td><td>4 seconds</td><td>4 seconds</td><td>4 seconds</td></tr>
</table></td></tr>
<tr><td colspan="3">PERIODIC CONFORMANCE TESTS</td></tr>
<tr><td>THERMOPLASTIC FLOW</td><td>3.50</td><td>Median not less than 225°C</td></tr>
<tr><td>SOLUBILITY</td><td>3.51</td><td>Specimens immersed in xylene shall not soften sufficiently to expose the bare conductor</td></tr>
<tr><td>DIELECTRIC BREAKDOWN AT RATED TEMPERATURE</td><td>3.52</td><td>Average not less than 75% of the value in Table 3.8.3.2</td></tr>
<tr><td>SCRAPE RESISTANCE</td><td>3.59</td><td>Lowest "grams-to-fail" load for any one of the three tests and the average of the three tests shall not be less than the values in Table 3.59.1</td></tr>
</table>

© Copyright 2005 by the National Electrical Manufacturers Association.

Copyright National Electrical Manufacturers Association
Provided by IHS under license with NEMA
No reproduction or networking permitted without license from IHS
Not for Resale

MW 102-A
POLYESTER (AMIDE) (IMIDE) OVERCOATED WITH POLYAMIDEIMIDE, AND SELF-BONDING OVERCOAT FILM INSULATED ROUND ALUMINUM MAGNET WIRE THERMAL CLASS 180/BOND STRENGTH PERFORMANCE 180ºC

INSULATING MATERIAL The conductor shall be coated with a multiple film. The underlying coating is based on polyester (amide) (imide) resins (1.4.2). The intermediate coating is based on polyamideimide resins (1.4.2), and the superimposed outer coating is based on resins, which are self-bonding in character (1.4.2).

THERMAL CLASS 180 with the above construction as defined in Part 1, Clause 1.8, and tested in accordance with Part 3, Clause 3.58.1.

BOND PERFORMANCE Determined by the retained bond strength at 180°C in accordance with 3.57.4

GENERAL REQUIREMENTS See Part 1.

Properties	Procedure, Part 3, Clause	Requirement
DIMENSIONS	3.2.1.2	Type 1 and Type 2: 14–28 AWG in accordance with Table 1-3
ADHERENCE AND FLEXIBILITY	3.3.1	No cracks visible in the film coating
ELONGATION	3.4	Not less than value in Table 3.4.2
HEAT SHOCK	3.5	No cracks visible in the film coating after conditioning at 200°C
DIELECTRIC BREAKDOWN	3.8.3	Not less than the value in Table 3.8.3.2
CONTINUITY	3.9.2	Max number of discontinuities in accordance with Table 3.9.2.1
PERIODIC CONFORMANCE TESTS		
DIELECTRIC BREAKDOWN AT RATED TEMPERATURE	3.52	Average not less than 75% of the value in Table 3.8.3.2
BOND STRENGTH– ROOM TEMPERATURE	3.57.3.1	Minimum 30 lbs. (134 N) of helical coil bond strength of 18 AWG copper Type 2 after processing at bond conditions agreed upon between customer and supplier.
BOND STRENGTH– ELEVATED TEMPERATURE	3.57.4	Minimum of 3 lbs. (13 N) of retained helical coil bond strength of 18 AWG copper Type 2 tested at 180 ± 3°C after processing at bond conditions agreed upon between customer and supplier.

© Copyright 2005 by the National Electrical Manufacturers Association.

Copyright National Electrical Manufacturers Association
Provided by IHS under license with NEMA
No reproduction or networking permitted without license from IHS
Not for Resale

MW 102-C
POLYESTER (AMIDE) (IMIDE) OVERCOATED WITH POLYAMIDEIMIDE, AND SELF-BONDING OVERCOAT FILM INSULATED ROUND COPPER MAGNET WIRE THERMAL CLASS 180/BOND STRENGTH PERFORMANCE 180ºC

INSULATING MATERIAL The conductor shall be coated with a multiple film. The underlying coating is based on polyester (amide) (imide) resins (1.4.2). The intermediate coating is based on polyamideimide resins (1.4.2), and the superimposed outer coating is based on resins, which are self-bonding in character (1.4.2).

THERMAL CLASS 180 with the above construction as defined in Part 1, Clause 1.8, and tested in accordance with Part 3, Clause 3.58.1.

BOND PERFORMANCE Determined by the retained bond strength at 180°C in accordance with 3.57.4

GENERAL REQUIREMENTS See Part 1.

Properties	Procedure, Part 3, Clause	Requirement
DIMENSIONS	3.2.1.2	Type 1 and Type 2: 14–40 AWG in accordance with Table 1-3
ADHERENCE AND FLEXIBILITY	3.3.1	No cracks visible in the film coating
ELONGATION	3.4	Not less than value in Table 3.4.2
HEAT SHOCK	3.5	No cracks visible in the film coating after conditioning at 200°C
SPRINGBACK	3.7.1	Not greater than the value in Table 3.7.1
DIELECTRIC BREAKDOWN	3.8.3 3.8.7	14–37 AWG: Not less than the value in Table 3.8.3.2 38–40 AWG: Not less than the value in Table 3.8.7.3
CONTINUITY	3.9.2	Max number of discontinuities in accordance with Table 3.9.2.1
PERIODIC CONFORMANCE TESTS		
THERMOPLASTIC FLOW	3.50	Median not less than 300ºC
DIELECTRIC BREAKDOWN AT RATED TEMPERATURE	3.52	Average not less than 75% of the value in Table 3.8.3.2
BOND STRENGTH– ROOM TEMPERATURE	3.57.3.1	Minimum 30 lbs. (133 N) of helical coil bond strength of 18 AWG copper Type 2 after processing at bond conditions shall be as agreed upon between customer and supplier.
BOND STRENGTH– ELEVATED TEMPERATURE	3.57.4	Minimum of 3 lbs. (13 N) of retained helical coil bond strength of 18 AWG copper Type 2 tested at 180 ± 3°C after processing at bond conditions agreed upon between customer and supplier.

© Copyright 2005 by the National Electrical Manufacturers Association.

Copyright National Electrical Manufacturers Association
Provided by IHS under license with NEMA
No reproduction or networking permitted without license from IHS
Not for Resale

MW 130-C
POLYURETHANE WITH SELF-BONDING OVERCOAT, FILM INSULATED ROUND COPPER MAGNET WIRE FOR SOLDERABLE APPLICATIONS, THERMAL CLASS 130

INSULATING MATERIAL The conductor shall be coated with a dual film. The underlying coating is based on polyurethane resins (1.4.2). The superimposed coating is based on resins that are self-bonding in character (1.4.2).

THERMAL CLASS 130 as defined in Part 1, Clause 1.8, and when tested in accordance with Part 3, Clause 3.58.1

GENERAL REQUIREMENTS See Part 1.

Properties	Procedure, Part 3, Clause	Requirement
DIMENSIONS	3.2.1.2	Type 1: 25–52 AWG; Type 2: 25–50 AWG in accordance with Table 1-3
ADHERENCE AND FLEXIBILITY	3.3.1	No cracks visible in the film coating
ELONGATION	3.4	Not less than value in Table 3.4.2
HEAT SHOCK	3.5	No cracks visible in the film coating after conditioning at 175°C
SPRINGBACK	3.7.1	Not greater than the value in Table 3.7.1
DIELECTRIC BREAKDOWN	3.8.3 3.8.7	25–37 AWG Not less than the value in Table 3.8.3.2 38–52 AWG Not less than the value in Table 3.8.7.3
CONTINUITY	3.9.2 3.9.3	25–44 AWG Max number of discontinuities in accordance with Table 3.9.2.1 45–52 AWG Max number of discontinuities in accordance with Table 3.9.3
SOLDERABILITY	3.13	Covered with continuous film of solder after immersion within the time and temperature specified:

AWG Size	Temperature	Type 1	Type 2
25–29	390 °C	5 seconds	6 seconds
30–36	390 °C	4 seconds	5 seconds
37–46	390 °C	3 seconds	4 seconds
47–52	360 °C	2 seconds	3 seconds

PERIODIC CONFORMANCE TESTS		
THERMOPLASTIC FLOW	3.50	Median not less than 170°C
DIELECTRIC BREAKDOWN AT RATED TEMPERATURE	3.52	Average not less than 75% of the value in Table 3.8.3.2
BOND STRENGTH – ROOM TEMPERATURE	3.57.3.1	18, 26 AWG Type 2–No break in the coil specimen when subjected to the load specified in Table 3.57.1.
	3.57.3.2	36 AWG Type 2–No separation of turns other than the first or last turn.
BOND STRENGTH – ELEVATED TEMPERATURE	3.57.4	Bond conditions and strength requirements as agreed upon between customer and supplier.

© Copyright 2005 by the National Electrical Manufacturers Association.

Copyright National Electrical Manufacturers Association
Provided by IHS under license with NEMA
No reproduction or networking permitted without license from IHS
Not for Resale

MW 131-C
POLYURETHANE WITH SELF-BONDING OVERCOAT, FILM INSULATED ROUND COPPER MAGNET WIRE FOR SOLDERABLE APPLICATIONS, THERMAL CLASS 155

INSULATING MATERIAL The conductor shall be coated with a dual film. The underlying coating is based on polyurethane resins (1.4.2). The superimposed coating is based on resins that are self-bonding in character (1.4.2).

THERMAL CLASS 155 as defined in Part 1, Clause 1.8, and when tested in accordance with Part 3, Clause 3.58.1

GENERAL REQUIREMENTS See Part 1.

<table>
<tr><th>Properties</th><th>Procedure, Part 3, Clause</th><th>Requirement</th></tr>
<tr><td>DIMENSIONS</td><td>3.2.1.2</td><td>Type 1: 25–52 AWG; Type 2: 25–50 AWG in accordance with Table 1-3</td></tr>
<tr><td>ADHERENCE AND FLEXIBILITY</td><td>3.3.1</td><td>No cracks visible in the film coating</td></tr>
<tr><td>ELONGATION</td><td>3.4</td><td>Not less than value in Table 3.4.2</td></tr>
<tr><td>HEAT SHOCK</td><td>3.5</td><td>No cracks visible in the film coating after conditioning at 175ºC</td></tr>
<tr><td>SPRINGBACK</td><td>3.7.1</td><td>Not greater than the value in Table 3.7.1</td></tr>
<tr><td>DIELECTRIC BREAKDOWN</td><td>3.8.3
3.8.7</td><td>25–37 AWG Not less than the value in Table 3.8.3.2
38–52 AWG Not less than the value in Table 3.8.7.3</td></tr>
<tr><td>CONTINUITY</td><td>3.9.2
3.9.3</td><td>25–44 AWG Max number of discontinuities in accordance with Table 3.9.2.1
45–52 AWG Max number of discontinuities in accordance with Table 3.9.3</td></tr>
<tr><td>SOLDERABILITY</td><td>3.13</td><td>Covered with continuous film of solder after immersion within the time and temperature specified:
<table>
<tr><th>AWG Size</th><th>Temperature</th><th>Type 1</th><th>Type 2</th></tr>
<tr><td>25–29</td><td>390 °C</td><td>5 seconds</td><td>6 seconds</td></tr>
<tr><td>30–36</td><td>390 °C</td><td>4 seconds</td><td>5 seconds</td></tr>
<tr><td>37–46</td><td>390 °C</td><td>3 seconds</td><td>4 seconds</td></tr>
<tr><td>47–56</td><td>360 °C</td><td>2 seconds</td><td>3 seconds</td></tr>
</table></td></tr>
<tr><td colspan="3">PERIODIC CONFORMANCE TESTS</td></tr>
<tr><td>THERMOPLASTIC FLOW</td><td>3.50</td><td>Median not less than 200°C</td></tr>
<tr><td>DIELECTRIC BREAKDOWN AT RATED TEMPERATURE</td><td>3.52</td><td>Average not less than 75% of the value in Table 3.8.3.2</td></tr>
<tr><td>BOND STRENGTH–
ROOM TEMPERATURE</td><td>3.57.3.1

3.57.3.2</td><td>18, 26 AWG Type 2–No break in the coil specimen when subjected to the load specified in Table 3.57.1.

36 AWG Type 2–No separation of turns other than the first or last turn.</td></tr>
<tr><td>BOND STRENGTH–
ELEVATED TEMPERATURE</td><td>3.57.4</td><td>Bond conditions and strength requirements as agreed upon between customer and supplier.</td></tr>
</table>

© Copyright 2005 by the National Electrical Manufacturers Association.

Copyright National Electrical Manufacturers Association
Provided by IHS under license with NEMA
No reproduction or networking permitted without license from IHS
Not for Resale

MW 135-C
POLYURETHANE OVERCOATED WITH POLYAMIDE AND SELF-BONDING OVERCOAT FILM INSULATED ROUND COPPER MAGNET WIRE FOR SOLDERABLE APPLICATIONS THERMAL CLASS 130

INSULATING MATERIAL The conductor shall be coated with a multiple film. The underlying coating is based on polyurethane resins (1.4.2). The intermediate coating is based on polyamide resins (1.4.2). The superimposed coating is based on resins that are self-bonding in character (1.4.2).

THERMAL CLASS 130 is defined in Part 1, Clause 1.8, and when tested in accordance with Part 3, Clause 3.58.1

GENERAL REQUIREMENTS See Part 1.

<table>
<tr><th>Properties</th><th>Procedure, Part 3, Clause</th><th>Requirement</th></tr>
<tr><td>DIMENSIONS</td><td>3.2.1.2</td><td>Type 1 and Type 2: 14–44 AWG in accordance with Table 1-3</td></tr>
<tr><td>ADHERENCE AND FLEXIBILITY</td><td>3.3.1</td><td>No cracks visible in the film coating</td></tr>
<tr><td>ELONGATION</td><td>3.4</td><td>Not less than value in Table 3.4.2</td></tr>
<tr><td>HEAT SHOCK</td><td>3.5</td><td>No cracks visible in the film coating after conditioning at 175°C</td></tr>
<tr><td>SPRINGBACK</td><td>3.7.1</td><td>Not greater than the value in Table 3.7.1</td></tr>
<tr><td>DIELECTRIC BREAKDOWN</td><td>3.8.3
3.8.7</td><td>14–37 AWG Not less than the value in Table 3.8.3.2 (polyamide col.)
38–44 AWG Not less than the value in Table 3.8.7.3 (polyamide col.)</td></tr>
<tr><td>CONTINUITY</td><td>3.9.2</td><td>Max number of discontinuities in accordance with Table 3.9.2.1</td></tr>
<tr><td>SOLDERABILITY</td><td>3.13</td><td>Covered with continuous film of solder after immersion within the time and at the temperature specified:
<table>
<tr><th>AWG Size</th><th>Temperature</th><th>Type 1</th><th>Type 2</th></tr>
<tr><td>14–19</td><td>430ºC</td><td>8 seconds</td><td>10 seconds</td></tr>
<tr><td>20–23</td><td>430ºC</td><td>6 seconds</td><td>8 seconds</td></tr>
<tr><td>24–29</td><td>390ºC</td><td>5 seconds</td><td>6 seconds</td></tr>
<tr><td>30–36</td><td>390ºC</td><td>4 seconds</td><td>5 seconds</td></tr>
<tr><td>37–44</td><td>390ºC</td><td>3 seconds</td><td>4 seconds</td></tr>
</table></td></tr>
<tr><td colspan="3">PERIODIC CONFORMANCE TESTS</td></tr>
<tr><td>THERMOPLASTIC FLOW</td><td>3.50</td><td>Median not less than 170°C</td></tr>
<tr><td>DIELECTRIC BREAKDOWN AT RATED TEMPERATURE</td><td>3.52</td><td>Average not less than 75% of the value in Table 3.8.3.2 (Polyamide column)</td></tr>
<tr><td>BOND STRENGTH–ROOM TEMPERATURE</td><td>3.57.3.1

3.57.3.2</td><td>18, 26 AWG Type 2–No break in the coil specimen when subjected to the load specified in Table 3.57.1.
36 AWG Type 2–No separation of turns other than the first or last turn.</td></tr>
<tr><td>BOND STRENGTH–ELEVATED TEMPERATURE</td><td>3.57.4</td><td>Bond conditions and strength requirements as agreed upon between customer and supplier.</td></tr>
</table>

© Copyright 2005 by the National Electrical Manufacturers Association.

Copyright National Electrical Manufacturers Association
Provided by IHS under license with NEMA
No reproduction or networking permitted without license from IHS
Not for Resale

MW 136-C
POLYURETHANE OVERCOATED WITH POLYAMIDE AND SELF-BONDING OVERCOAT FILM INSULATED ROUND COPPER MAGNET WIRE FOR SOLDERABLE APPLICATIONS THERMAL CLASS 155

INSULATING MATERIAL The conductor shall be coated with a multiple film. The underlying coating is based on polyurethane resins (1.4.2). The intermediate coating is based on polyamide resins (1.4.2). The superimposed outer coating is based on resins that are self-bonding in character (1.4.2).

THERMAL CLASS 155 is defined in Part 1, Clause 1.8, and when tested in accordance with Part 3, Clause 3.58.1

GENERAL REQUIREMENTS See Part 1.

<table>
<tr><th>Properties</th><th>Procedure, Part 3, Clause</th><th>Requirement</th></tr>
<tr><td>DIMENSIONS</td><td>3.2.1.2</td><td>Type 1 and Type 2: 14–44 AWG in accordance with Table 1-3</td></tr>
<tr><td>ADHERENCE AND FLEXIBILITY</td><td>3.3.1</td><td>No cracks visible in the film coating</td></tr>
<tr><td>ELONGATION</td><td>3.4</td><td>Not less than value in Table 3.4.2</td></tr>
<tr><td>HEAT SHOCK</td><td>3.5</td><td>No cracks visible in the film coating after conditioning at 175°C</td></tr>
<tr><td>SPRINGBACK</td><td>3.7.1</td><td>Not greater than the value in Table 3.7.1</td></tr>
<tr><td>DIELECTRIC BREAKDOWN</td><td>3.8.3
3.8.7</td><td>14–37 AWG Not less than the value in Table 3.8.3.2 (polyamide col.)
38–44 AWG Not less than the value in Table 3.8.7.3 (polyamide col.)</td></tr>
<tr><td>CONTINUITY</td><td>3.9.2</td><td>Max number of discontinuities in accordance with Table 3.9.2.1</td></tr>
<tr><td>SOLDERABILITY</td><td>3.13</td><td>Covered with continuous film of solder after immersion within the time and at the temperature specified:
<table>
<tr><th>AWG Size</th><th>Temperature</th><th>Type 1</th><th>Type 2</th></tr>
<tr><td>14–19</td><td>430ºC</td><td>8 seconds</td><td>10 seconds</td></tr>
<tr><td>20–23</td><td>430ºC</td><td>6 seconds</td><td>8 seconds</td></tr>
<tr><td>24–29</td><td>390ºC</td><td>5 seconds</td><td>6 seconds</td></tr>
<tr><td>30–36</td><td>390ºC</td><td>4 seconds</td><td>5 seconds</td></tr>
<tr><td>37–44</td><td>390ºC</td><td>3 seconds</td><td>4 seconds</td></tr>
</table></td></tr>
<tr><td colspan="3">PERIODIC CONFORMANCE TESTS</td></tr>
<tr><td>THERMOPLASTIC FLOW</td><td>3.50</td><td>Median not less than 200°C</td></tr>
<tr><td>DIELECTRIC BREAKDOWN AT RATED TEMPERATURE</td><td>3.52</td><td>Average not less than 75% of the value in Table 3.8.3.2 (Polyamide column)</td></tr>
<tr><td>BOND STRENGTH–ROOM TEMPERATURE</td><td>3.57.3.1</td><td>18, 26 AWG Type 2–No break in the coil specimen when subjected to the load specified in Table 3.57.1.</td></tr>
<tr><td></td><td>3.57.3.2</td><td>36 AWG Type 2–No separation of turns other than the first or last turn.</td></tr>
<tr><td>BOND STRENGTH–ELEVATED TEMPERATURE</td><td>3.57.4</td><td>Bond conditions and strength requirements as agreed upon between customer and supplier.</td></tr>
</table>

© Copyright 2005 by the National Electrical Manufacturers Association.

Copyright National Electrical Manufacturers Association
Provided by IHS under license with NEMA
No reproduction or networking permitted without license from IHS
Not for Resale

<This page is intentionally left blank.>

© Copyright 2005 by the National Electrical Manufacturers Association.

Copyright National Electrical Manufacturers Association
Provided by IHS under license with NEMA
No reproduction or networking permitted without license from IHS
Not for Resale

Part 3
TEST PROCEDURES

(See Part 1, Clause 1.3 for Definitions, and Clause 1.6 for Test Conditions and Parameters)

3.1 SAFETY STATEMENT

It is not the intent of this standard to address all of the safety issues associated with its use. It is the responsibility of the user of this standard to train personnel, establish proper health and safety procedures and be aware of local, state and national regulatory restrictions that may apply.

chemical hazard: Some tests use materials that local, state, and national regulatory agencies have determined to be hazardous. These tests shall be performed under controlled conditions, which allow for proper safety and protection of personnel. Information and instructions contained in Material Safety Data Sheets (MSDS) for handling, working and disposal of hazardous chemicals shall be followed. Furthermore, discharges of these chemicals to the environment, that is, the air, water or ground must comply with the latest applicable regulations.

electrical hazard: Certain test procedures require high voltage. It is important that the equipment be designed to comply with good engineering practices with safety being an integral part of the design. To avoid electric shocks in such cases, necessary precautions must be taken and test equipment manufacturers' recommendations shall be followed.

mechanical hazard: Some tests utilizing mechanical equipment may expose the operator to mechanical hazards. Care must be exercised to protect eyes, fingers, hands, and other body parts from injury.

thermal hazard: In tests requiring elevated temperatures, precautions must be taken in handling materials exposed to heat to avoid skin burns.

ROUTINE TESTS

3.2 DIMENSIONS

The increase in dimensions due to the insulation shall be determined in accordance with 3.2.1 or 3.2.2.

3.2.1 Round Wire

3.2.1.1 Film Insulated

3.2.1.1.1 Optical Micrometer Method (Preferred)

The overall diameter of the film-insulated wire shall be measured at a minimum of four different positions evenly spaced around one half of the circumference. The average of these readings shall be recorded as the overall diameter.

The insulation shall be removed at approximately the same position on the wire by means not injurious to the conductor, and the measurements shall be repeated around the bare wire. The average of the readings shall be recorded as the diameter of the conductor. The increase in diameter due to the insulation shall be calculated in accordance with the following equation:

(Increase in diameter due to insulation) = (Overall diameter) - (Diameter of bare wire)

3.2.1.1.2 Hand or Bench Mechanical Micrometer Method (Alternative)

The film insulated wire shall be measured at a minimum of four points, evenly spaced around one half of the circumference. The largest and smallest readings shall be recorded, and the average of these two readings shall be taken as the overall diameter. The insulation shall then be removed at approximately the same position on the wire by means not injurious to the conductor and the measurements repeated around the bare wire. The average of the largest and smallest readings shall be taken as the diameter of the bare wire. The use of measuring instruments such as pressure type micrometers or electronic meters shall be

© Copyright 2005 by the National Electrical Manufacturers Association.

Copyright National Electrical Manufacturers Association
Provided by IHS under license with NEMA
No reproduction or networking permitted without license from IHS
Not for Resale

permitted in measuring diameters in accordance with Table 3.2.1. The increase in diameter due to the insulation shall be calculated in accordance with the following equation:

(Increase in diameter due to insulation) = (Overall diameter) - (Diameter of bare wire)

3.2.1.2 Self Bonding Over Coated

The increase in diameter due to the self-bonding overcoat shall be determined in the following manner. The overall diameter shall be measured in accordance with 3.2.1.1.1 or 3.2.1.1.2. The result shall be recorded as the overall diameter. The self-bonding overcoat shall then be removed by immersing the wire for 2 minutes in a solvent which will remove the outer coating without swelling or softening the underlying film coating and then wiping the wire with a wipe dampened with solvent. The diameter of the underlying film coating shall be measured by the same method used for determining the overall diameter. The result shall be taken as the diameter of the underlying film coated wire. The increase in the diameter due to the self-bonding overcoat shall be calculated according to the following equation:

(Increase in diameter due to self-bonding overcoat) = (Overall diameter) - (Diameter of underlying film coated wire)

The underlying film insulation shall be removed at approximately the same position on the wire by means not injurious to the conductor and the measurements shall be repeated around the bare wire. The average, determined in accordance with either 3.2.1.1.1 or 3.2.1.1.2 shall be recorded as the diameter of the conductor. The increase in diameter due to the underlying film coating shall be determined according to the following equation:

(Increase in diameter due to underlying film coating) = (Diameter of underlying film coated wire) - (Diameter of bare wire)

3.2.1.3 Fibrous and Tape Covered

A pressure type micrometer shall be used to measure the diameters in accordance with Table 3.2.1. Fibrous covered wire shall be measured at three locations, spaced approximately 1 foot (305 mm) apart. In each set of measurements, the diameter shall be measured at two points on the circumference, approximately 90 degrees apart. The average of these readings shall be taken as the overall diameter. When measuring tape covered wire, care shall be exercised to make measurements at the maximum overall diameter. The insulation shall then be removed at approximately the same positions on the wire by means not injurious to the bare wire and the measurements repeated around the bare wire.

Table 3.2.1
SPECIFICATION FOR MICROMETER ANVIL DIAMETER AND SPINDLE FORCE

Test Parameters	Wire Type	Film Coated	Fibrous Covered	Tape Covered
Anvil Diameter	Round and Rectangular	0.250 ± .001 in. (6 ± .03 mm)	0.250 ± .001 in. (6 ± .03 mm)	0.250 ± .001 in. (6 ± .03 mm)
Spindle Force	Round	25 AWG and Smaller 3–5 oz. (0.8–1.4 N)	Same as Film Coated	...
Spindle Force	Round	Larger than 25 AWG 8–10 oz. (2.2–2.8 N)	Same as Film Coated	...
Spindle Force	Rectangular	All sizes 8–10 oz. (2.2–2.8 N)	Same as Film Coated	...
Spindle Force	Round and Rectangular	...	...	All Sizes (2.5–3.0 lb.) (11.2–13.4 N)

In the case of glass fiber or polyester glass covering over film coated wire, the film coating as well as the glass fibers shall be removed and the measurements repeated around the bare wire. In each set of measurements, the diameter shall be measured at two points on the circumference, approximately 90 degrees apart. The increase in diameter due to the insulation shall be calculated in accordance with the following:

(Increase in diameter due to insulation) = (Overall diameter) - (Diameter of bare wire)

© Copyright 2005 by the National Electrical Manufacturers Association.

Copyright National Electrical Manufacturers Association
Provided by IHS under license with NEMA
No reproduction or networking permitted without license from IHS
Not for Resale

3.2.2 Rectangular and Square Wire

3.2.2.1 Film Insulated

The overall dimension shall be measured on three carefully straightened specimens, each a minimum of 3 inches (76 mm) long, taken from the reel at approximately 1-foot (305-mm) intervals. Straightening shall be accomplished by stretching the wire not more than 1 percent to remove bends or kinks. One measurement of the dimension shall be made over the insulation of each specimen for both the thickness and width. The average of the three readings for thickness and width shall be taken as the overall dimension for thickness and width. The insulation shall then be removed at these points by means not injurious to the bare wire, the same measurements made, and then the average taken as the dimensions of the bare wire. A pressure type micrometer shall be used to measure the thickness and width dimensions (See Table 3.2.1). The radii of bare wire shall be measured with a standard radius gauge.

thickness and width: The increase in the thickness and width dimensions due to the insulation shall be calculated in accordance with the following:

Increase in dimension due to insulation = (Overall dimension) – (Dimension of bare wire)

3.2.2.2 Fibrous and Tape Covered

The dimensions shall be measured in accordance with 3.2.2.1. A pressure type micrometer shall be used to measure overall dimensions (See Table 3.2.1). In the case of glass fiber or polyester glass covering over film coated wire, the film coating as well as the glass fibers shall be removed and the measurements repeated to determine the overall increase due to the insulation. When measuring tape covered wire, care shall be exercised to make measurements at the maximum overall dimensions.

3.3 ADHERENCE AND FLEXIBILITY

Warning: Mechanical Hazard – Equipment must be designed to contain any flying pieces of wire. Operator should wear proper safety equipment.

3.3.1 Elongation and Mandrel Wrap Method

A specimen having an effective length of 10 ± 1/4 in. (254 ± 6 mm) shall be elongated, wound ten turns (or until the specimen is consumed) around a mandrel, and examined in accordance with Table 3.3.1.

Table 3.3.1
ADHERENCE, FLEXIBILITY AND HEAT SHOCK: ELONGATION AND MANDREL DIAMETERS

Material AWG Size	Elongation Rate	Elongation Percent (+2,-0)	Mandrel Diameter	Total Elongation	Examined With
Copper					
Rectangular	12 ± 1 in (305 ± 25 mm) per min	See Part 2	None	See Part 2	Normal vision
4–9 Round	12 ± 1 in (305 ± 25 mm) per min	30	None	30	Normal vision
10–13	12 ± 1 in (305 ± 25 mm) per min	25	5d	36.7	Normal vision
14–30	Sudden jerk**	20	3d	45	Normal vision
31–44	Sudden jerk**	20†	3d	45	6x–10x magnification
45–56††	Sudden jerk**	5	0.006 in (0.150 mm)	≤33	10x–15x magnification
Aluminum					
Rectangular	12 ± 1 in (305 ± 25 mm) per min	See Part 2	None	See Part 2	Normal vision
4–9 Round	12 ± 1 in (305 ± 25 mm) per min	15	None	15	Normal vision
10–15	12 ± 1 in (305 ± 25 mm) per min	15	5d	26.7	Normal vision
16–20	Sudden jerk**	15†	3d	40	Normal vision
21–25	Sudden jerk**	10†	3d	35	Normal vision

** 12-15 ft./sec. (3.7-4.9 m/sec.)
† Or to its breaking point, whichever is less
†† Applies to Adherence and Flexibility testing only

© Copyright 2005 by the National Electrical Manufacturers Association.

Copyright National Electrical Manufacturers Association
Provided by IHS under license with NEMA
No reproduction or networking permitted without license from IHS
Not for Resale

Round wire test specimens shall be evenly wound in a close helix around the mandrel and under sufficient tension to ensure a compact winding. Care shall be exercised not to introduce an axial twist into the specimen. Any failures on the first and last turns of the round wire mandrel specimens shall be disregarded.

3.3.2 Mandrel Wrap Method

A specimen of sufficient length shall be tightly wound three turns around a mandrel equal to the diameter specified in Part 2. Round wire test specimens shall be evenly wound in a close helix around the mandrel and under sufficient tension to ensure a compact winding. Care shall be exercised not to introduce an axial twist into the specimen. The specimen shall be examined with normal vision.

3.3.3 Elongation Method

A specimen having an effective length of 10 inches (254 mm) shall be elongated by the percentage specified in Part 2, at a rate of 12 ±1 inches (305 ± 25 mm) per minute. The elongation shall be 30 percent (+2, -0) for copper or 15 percent (+2, -0) for aluminum if an elongation percentage is not specified in Part 2. The specimen shall be examined with normal vision.

3.3.4 Circumferential Cut and Elongation Method

The insulation of a test specimen having an effective length of 10 inches (254 mm) shall be circumferentially cut at approximately its mid-point and then elongated at least 10% at a rate of 12 inches ± 1 inch per minute (305 mm ± 25 mm). The specimen shall then be examined with normal vision.

3.3.5 Bend and Shot Dielectric Method

A specimen shall be wound flatwise 180 degrees around a mandrel having a diameter 10 times the thickness of the bare wire, and the bent portion shall be buried in lead, nickel or nickel-plated shot, 0.080 to 0.110 inch (2.0 to 2.8 mm) in diameter. The specimen shall then be tested in accordance with 3.8.1, applying the voltage between the conductor and the shot.

3.3.6 Flat and Edge Bend Method

A specimen shall be bent flatwise and edgewise 90 degrees around a mandrel having a diameter 4 times the thickness or width respectively. The specimen shall be examined with normal vision.

3.4 ELONGATION

A specimen having an effective length of 10 inches ± 1/4 inch (254 mm ± 6 mm) shall be elongated to its breaking point at a rate of 12 ± 1 inches (305 ± 25 mm) per minute. The specimen gripping jaws shall be such that a break will not occur within 1/4 inch (6 mm) of either jaw. The travel distance of the jaw at the instant of break shall be noted and the percentage of elongation calculated. The minimum percent elongation values listed in Table 3.4.1 or 3.4.2 shall apply to the wire size range specified in Part 2. In case of failure of glass fiber covered wire sizes 21 AWG and larger, the fibrous covering shall be removed from another specimen and the wire tested. On sizes 22 AWG and smaller, the fibrous covering shall be removed from the specimens prior to testing.

Table 3.4.1
MINIMUM PERCENT ELONGATION, SQUARE AND RECTANGULAR WIRE

Wire Size		Copper							Aluminum	
				Glass Fiber						
		Film Insulated	Paper, Paper-Cotton	With Glass	Glass Removed	Polyester/ Glass Fiber	Aromatic Polyamide Paper	Aromatic Polyimide Film	Film Insulated	Fibrous Covered
MW Specification		18, 20, 36	33	42, 43, 52		46, 48, 53	60	62	18, 36	60
Square and	T ≥ 0.049"	32	32	32	n/a	32	32	32	15	15
Rectangular	T < 0.049"	32	30	30	n/a	30	30	30	15	15

© Copyright 2005 by the National Electrical Manufacturers Association.

Copyright National Electrical Manufacturers Association
Provided by IHS under license with NEMA
No reproduction or networking permitted without license from IHS
Not for Resale

Table 3.4.2
MINIMUM PERCENT ELONGATION, ROUND WIRE

	Copper						Aluminum	
MW Specification	*	31	41, 44, 50, 52		45, 47, 51	61	63	*	61
AWG Size	Film Insulated	Paper, Paper-Cotton	With glass	Glass removed	Polyester/ Glass Fiber	Aromatic Polyamide Paper	Aromatic Polyimide Film	Film Insulated	Fibrous Covered
4/0–1/0	32	—	35	35	35	35		15	15
1–3	32	—	30	30	30	30	30	15	15
4	38	—	30	30	30	30	30	15	15
5	37	—	30	30	30	30	30	15	15
6	37	—	30	30	30	30	30	15	15
7	36	—	30	30	30	30	30	15	15
8	36	25	30	30	30	30	30	15	15
9	36	25	20	30	20	30	30	15	15
10	35	25	20	30	20	—	30	15	—
11	35	25	20	30	20	—	30	15	—
12	34	25	20	30	20	—	30	15	—
13	34	25	20	30	20	—	30	15	—
14	33	20	20	30	20	—	30	15	—
15	33	20	20	30	20	—	—	15	—
16	33	20	15	25	15	—	—	15	—
17	32	20	15	25	15	—	—	15	—
18	32	20	15	25	15	—	—	15	—
19	31	20	15	25	15	—	—	15	—
20	30	20	15	25	15	—	—	14	—
21	30	20	15	25	15	—	—	14	—
22	29	20	—	20	10	—	—	14	—
23	29	10	—	20	10	—	—	14	—
24	28	10	—	20	10	—	—	13	—
25	28	10	—	20	10	—	—	13	—
26	27	10	—	20	10	—	—	13	—
27	27	10	—	20	10	—	—	13	—
28	26	10	—	20	10	—	—	12	—
29	26	10	—	15	10	—	—	—	—
30	25	10	—	15	10	—	—	—	—
31	24	10	—	—	—	—	—	—	—
32	24	10	—	—	—	—	—	—	—
33	23	—	—	—	—	—	—	—	—
34	22	—	—	—	—	—	—	—	—
35	21	—	—	—	—	—	—	—	—
36	20	—	—	—	—	—	—	—	—
37	20	—	—	—	—	—	—	—	—
38	19	—	—	—	—	—	—	—	—
39	18	—	—	—	—	—	—	—	—
40	17	—	—	—	—	—	—	—	—
41	17	—	—	—	—	—	—	—	—
42	16	—	—	—	—	—	—	—	—
43	15	—	—	—	—	—	—	—	—
44	14	—	—	—	—	—	—	—	—
45	11	—	—	—	—	—	—	—	—
46	10	—	—	—	—	—	—	—	—
47	8	—	—	—	—	—	—	—	—
48	7	—	—	—	—	—	—	—	—
49	6	—	—	—	—	—	—	—	—
50	5	—	—	—	—	—	—	—	—

* See Table of Contents for a list of MW specification numbers for these constructions.

© Copyright 2005 by the National Electrical Manufacturers Association.

Copyright National Electrical Manufacturers Association
Provided by IHS under license with NEMA
No reproduction or networking permitted without license from IHS
Not for Resale

3.5 HEAT SHOCK

Warning: Thermal Hazard – Care must be exercised in removing test specimens from the oven to avoid skin burns.

A specimen having an effective length of 10 inches ± 1/4 inch (254 mm) shall be elongated at the rate given and wound not more than ten turns around a mandrel equal to the diameter given in Table 3.3.1, unless otherwise specified in Part 2. Round wire test specimens shall be evenly wound in a close helix around the mandrel and under sufficient tension to ensure a compact winding. Any failures on the first and last turns of the round wire mandrel specimens shall be disregarded. Care shall be exercised not to introduce an axial twist into the specimen.

The specimen shall be removed from the mandrel and placed in a circulating air oven for 30 (+5, -0) minutes at not less than the temperature specified in Part 2. The specimen shall be allowed to cool to room temperature and shall then be examined in accordance with Table 3.3.1.

3.6 (RESERVED)

3.7 SPRINGBACK (COPPER CONDUCTORS ONLY)

3.7.1 Mandrel Wrap Method

3.7.1.1 Principle of Test

The springback of a wire specimen quantifies the amount of elastic memory remaining in a wound coil by measuring the angular displacement of its free end as it is allowed to slowly unwind.

NOTE–A soft wire will exhibit less of a tendency to spring back. Hence the degrees return (springback) will be less than that for harder wire.

3.7.1.2 Scale Description

The springback scales are graduated into 120 segments representing degrees per turn since the wire is wrapped three times around the specified mandrel, as shown in Figure 3.7.1.1. The marked segments on the scales are drawn from the theoretical centers of the relaxed coils.

The theoretical centers of the relaxed coils are determined using the following calculations:

$$D_{new} = 360 * D_{initial} / [360 - (\theta / 3)]$$

Where:

D_{new} = New diameter of the relaxed coil

$D_{initial}$ = Initial diameter of the mandrel upon which the wire was wrapped

θ = The angle that the mark on the last turn of wire travels in the relaxed coil

Thus the new center C_{new}:

$C_{new} = D_{new} / 2$ measured from the top of the original mandrel diameter.

© Copyright 2005 by the National Electrical Manufacturers Association.

Copyright National Electrical Manufacturers Association
Provided by IHS under license with NEMA
No reproduction or networking permitted without license from IHS
Not for Resale

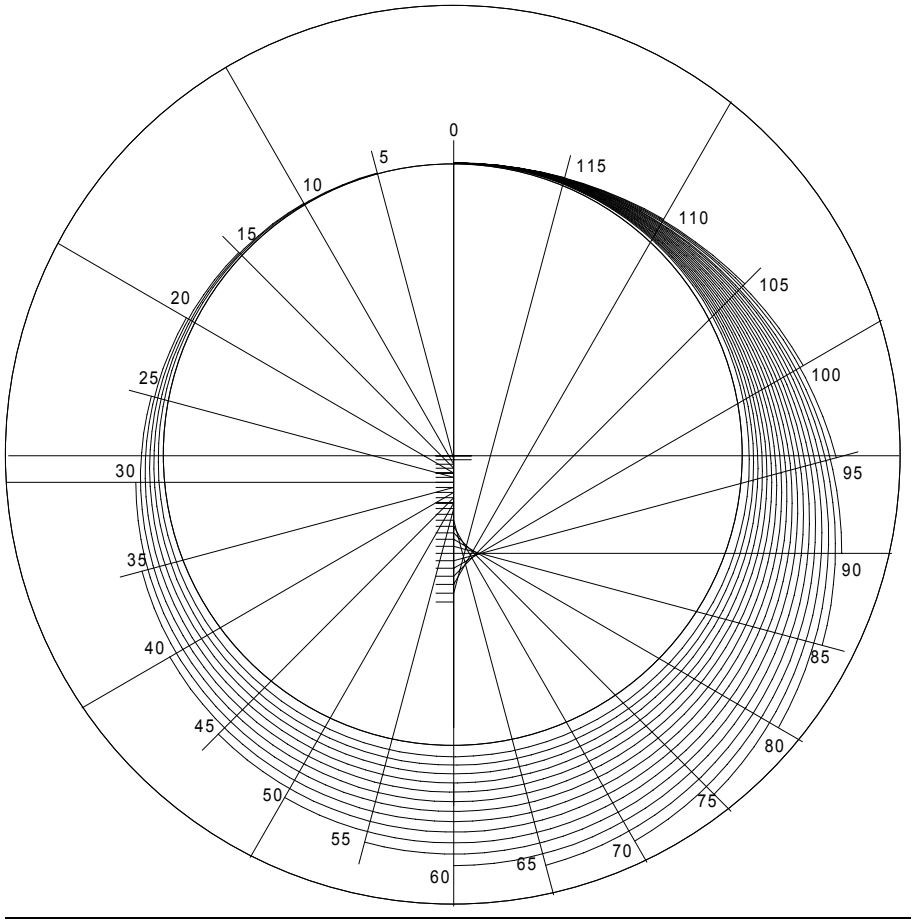

Figure 3.7.1.1
DETAILS OF SPRINGBACK SCALE

© Copyright 2005 by the National Electrical Manufacturers Association.

Copyright National Electrical Manufacturers Association
Provided by IHS under license with NEMA
No reproduction or networking permitted without license from IHS

Not for Resale

3.7.1.3 Procedure

Using a Springback tester (see Figures 3.7.1.2 and 3.7.1.3), a specimen shall be wound for three turns around a mandrel having the diameter shown in Table 3.7.1 under the tension indicated.

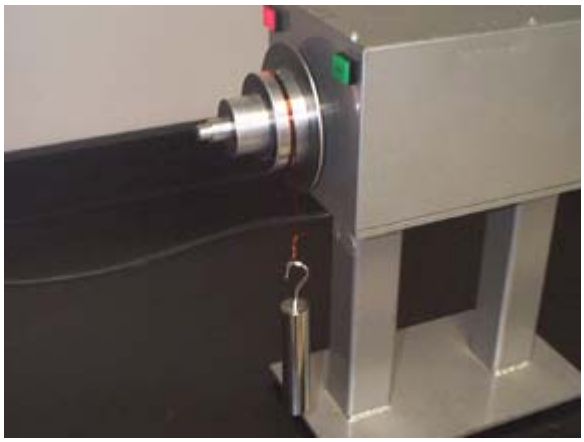

Figure 3.7.1.2
SPRINGBACK TESTER AFTER WINDING A COIL UNDER TENSION

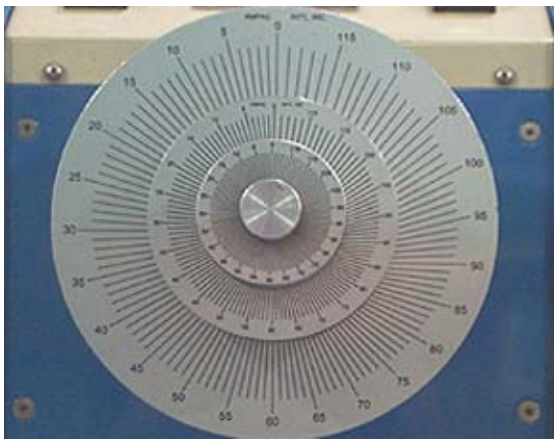

Figure 3.7.1.3
EXAMPLE OF SPRINGBACK SCALES

Springback test equipment shall be operated in accordance with the following procedure:

a. The instrument shall be mounted with the shaft of the mandrel horizontal and at a height sufficient to allow a 4.0-ft (1.22-meter) sample to hang freely.
b. The mandrel shall be locked in position so that the hole for fastening the wire is in a vertical position to correspond with zero on the dials.
c. The wire to be tested shall be removed carefully from the package in such a way that the wire will not be subjected to extra bends or tension and shall be wound onto the mandrel in the same direction as originally coiled.
d. One end of the wire shall be inserted into the mandrel hole provided using the mandrel diameter and weight specified in Table 3.7.1.
e. The wire shall be layer-wound by turning the mandrel counter-clockwise through exactly three revolutions at a rate of 5 to 10 rpm.
f. A mark shall be made on the last turn opposite the zero mark on the dial.
g. The wire shall be held in place on the mandrel and the weight removed soon after the coil is wound.
h. The wire shall be cut leaving approximately ½ inch (12 mm) of wire past the zero mark. This ½ inch (12 mm) length shall be bent into a vertical position.
i. Placing a pencil or other supporting device to the left of the vertical end of the wire the coil shall be allowed to unwind slowly without jerking.

   NOTE–If the wire is permitted to spring back suddenly, erroneous results are obtained.

j. The indicating point on the free end of the coil shall come to rest on the curve on the dial.
k. The springback value is read from the indicating dial on the mandrel, which aligns with the mark on the last turn.

© Copyright 2005 by the National Electrical Manufacturers Association.

Copyright National Electrical Manufacturers Association
Provided by IHS under license with NEMA
No reproduction or networking permitted without license from IHS
Not for Resale

Table 3.7.1
SPRINGBACK – MANDREL WRAP METHOD

AWG Size	Mandrel Diameter inches (± 0.005)	Mandrel Diameter mm (± 0.127)	Tension (± 2%) Ounces	Tension (± 2%) Newtons	Springback – Maximum Degrees per Turn Single and Heavy Build, and Type 1	Springback – Maximum Degrees per Turn Triple and Quad Build, Types 2 and 3
14	3.25	82.6	16	4.45	42	46
14.5	3.25	82.6	16	4.45	44	48
15	3.25	82.6	16	4.45	46	49
15.5	3.25	82.6	16	4.45	48	51
16	3.25	82.6	16	4.45	50	53
16.5	3.25	82.6	16	4.45	52	56
17	3.25	82.6	16	4.45	54	58
17.5	3.25	82.6	16	4.45	56	60
18	3.25	82.6	16	4.45	58	62
18.5	3.25	82.6	16	4.45	60	64
19	3.25	82.6	16	4.45	62	66
19.5	3.25	82.6	16	4.45	64	68
20	3.25	82.6	16	4.45	66	70
20.5	1.88	47.6	4	1.11	51	55
21	1.88	47.6	4	1.11	53	57
21.5	1.88	47.6	4	1.11	56	59
22	1.88	47.6	4	1.11	58	60
22.5	1.88	47.6	4	1.11	60	62
23	1.88	47.6	4	1.11	62	64
23.5	1.88	47.6	4	1.11	65	67
24	1.88	47.6	4	1.11	67	69
24.5	1.88	47.6	2	0.56	70	72
25	1.88	47.6	2	0.56	72	74
25.5	1.88	47.6	2	0.56	74	77
26	1.88	47.6	2	0.56	76	80
26.5	0.75	19.0	2	0.56	48	53
27	0.75	19.0	2	0.56	50	55
27.5	0.75	19.0	2	0.56	53	58
28	0.75	19.0	2	0.56	55	60
28.5	0.75	19.0	2	0.56	58	63
29	0.75	19.0	2	0.56	61	65
29.5	0.75	19.0	2	0.56	64	68
30	0.75	19.0	2	0.56	66	70

© Copyright 2006 by the National Electrical Manufacturers Association.

Copyright National Electrical Manufacturers Association
Provided by IHS under license with NEMA
No reproduction or networking permitted without license from IHS
Not for Resale

3.7.2 Deflection Method (All Rectangular, and Round Sizes Larger than 14 AWG)

3.7.2.1 Principle of Test

The test consists of bending a specimen over a given angle, then removing the load and measuring the Springback in degrees.

3.7.2.2 Specimen

The sample shall be at least 48 inches (1219 mm) long and shall be removed from the spool with as little bending as possible. It shall be carefully straightened by hand and cut into 16-inch (406-mm) specimens. Work hardening shall be minimized. Elongation by machines shall NOT be used for straightening.

3.7.2.3 Test Apparatus

The Springback is determined by means of the apparatus shown in Figure 3.7.2, consisting essentially of two smooth jaws, one fixed (2), the other moveable (1), and a sector graduated in degrees (5) with the 0-10° sector of the scale graduated in 0.5° increments.

The test apparatus shall be placed in a horizontal position on a table. The graduated sector is an arc placed in a plane 90° to the clamp faces. Its center is located at the outer edge of the fixed jaw (3). The lever arm whose fulcrum is placed at the center of the arc can move over the graduated sector in the horizontal plane. The lever arm shall have a marker to clearly indicate the Springback. There is a movable slider (4) located on the lever arm which has a 12 inch (305 mm) length scaled off in tenths of an inch (or 0.25 mm).

3.7.2.4 Test Procedure

The test shall be made by bending the wire specimens in the same direction that the wire was bent when wound on the spool. A lever arm slider is provided to compensate for differences in thicknesses or diameter of the test specimen. The bare wire thickness (or round wire diameter) shall be measured to determine the actual position of the slider. The calculated distance from the fulcrum to the lever arm slider pointer is determined by multiplying the thickness (or diameter) of the wire by 40. The wire is moderately tightened between the jaws with the direction of the former curvature up, or away from the operator, to leave a free length of specimen extending approximately 0.5 inches (13 mm) beyond the slider knife edge.

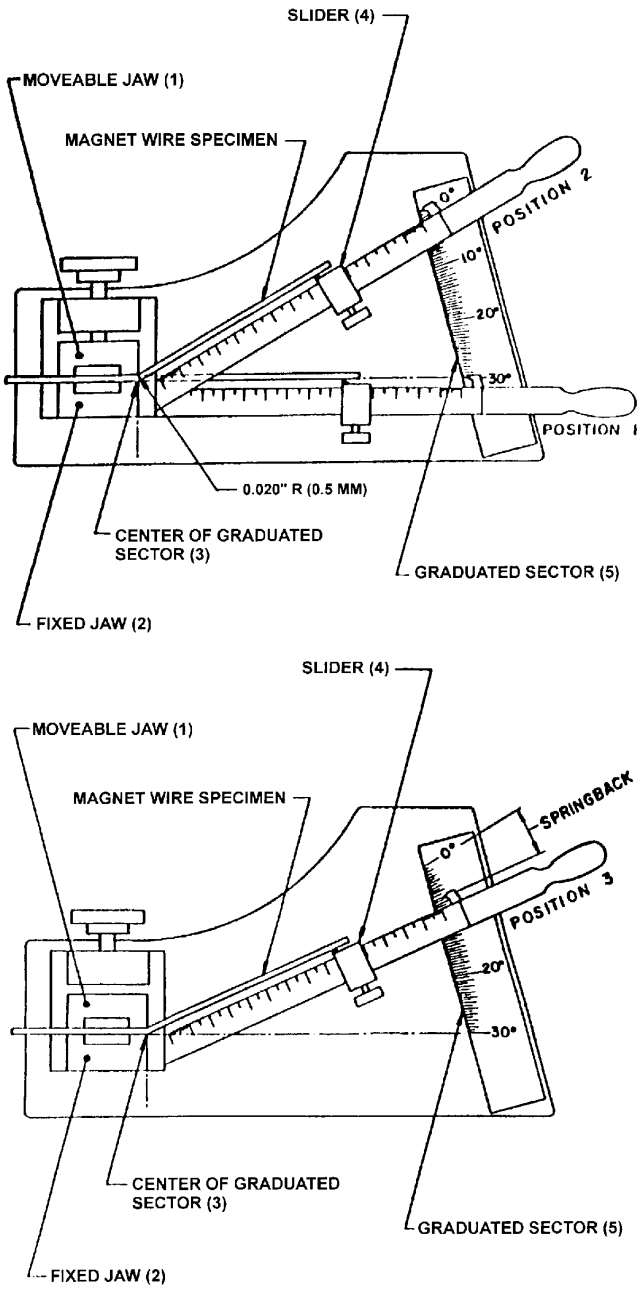

Figure 3.7.2
APPARATUS FOR SPRINGBACK DEFLECTION METHOD

© Copyright 2005 by the National Electrical Manufacturers Association.

Copyright National Electrical Manufacturers Association
Provided by IHS under license with NEMA
No reproduction or networking permitted without license from IHS
Not for Resale

By means of the lever arm, starting at the horizontal position (the 30° scale mark, position 1), the wire is gently bent 30° (to the 0° scale mark, position 2). The time of this bending shall be not less than 2 seconds nor more than 5 seconds. The specimen is held at the 0° point (a 30° bend) for a maximum of 2 seconds.

3.7.2.5 Value of Springback

The lever arm is gently returned in the reverse direction at the same angular rate at which it was raised until the slider knife edge moves away from the wire specimen. The lever arm is then raised until the slider knife edge again just contacts the wire specimen without moving it. The point where the lever arm pointer aligns with the graduated sector scale indicates the Springback value

The value of Springback is read directly on the scale shown by the position of the lever arm marker on the graduated sector (in position 3).

The operator shall test three specimens per sample. The results of the three specimens must not differ by more than 0.5° over a consecutive length of sample or a new sample shall be selected and tested. The final result shall be the average of the three specimens.

3.8 DIELECTRIC BREAKDOWN

Warning: Electrical Hazard – Extremely high voltages may be present. Personnel performing the test must be adequately trained and qualified. The design of the test equipment must comply with good engineering practice and incorporate safety features. This includes grounding of metal parts to avoid electric shock and burns to operators performing the test.

Warning: Chemical Hazard – Ozone gas may be generated under high voltage conditions during testing. Test area must have adequate ventilation.

3.8.1 Test Procedure – General

A source of 60-hertz voltage of a substantially sinusoidal waveform shall be applied separately and consecutively between a specified electrode and the conductor or between two conductor legs.

The testing transformer shall have a rating of 500 volt-amperes or more and shall provide an essentially undistorted waveform under test conditions.

Fault current of the circuit shall be a minimum of 1.5 milliamperes.

The voltage shall start at zero and shall be increased uniformly at the rate of 500 volts per second (± 10%) until breakdown occurs. In the event that breakdown occurs in less than 5 seconds, the rate of increase in voltage shall be reduced sufficiently so that breakdown occurs in not less than 5 seconds. The breakdown voltage (ASTM D 149) shall be measured with a meter calibrated in rms. (root mean squared) volts in accordance with one of the methods described in ANSI/IEEE Std 4.

In case of failure, additional specimens of wire in an unbent and un-stretched condition shall be dried for 20 ± 1 minutes in a forced air oven at 60°C ± 3°C (140 ± 4.5°F). The sample shall be cooled to room temperature and tested in accordance with the foregoing procedure.

Dielectric breakdown values are affected by the presence of skin oils, acids, salts, dust, dirt, etc. Gloves shall be worn when preparing test specimens or during handling of magnet wire for this test.

3.8.2 Foil Electrode Method

Electrodes shall be prepared by applying a 1/4-inch (6-mm) wide thin metal foil to the center of a 1/2-inch (13 mm) wide pressure-sensitive tape. The tape shall be cut into strips each about three inches (76 mm) long. Four of these electrodes shall be applied at right angles to the specimen at intervals approximately 2 inches (51 mm) and wrapped smoothly and firmly around the specimen a minimum of 1-1/2 complete turns, with the metal surface of the foil in contact with the insulation. The test voltage shall be applied separately and consecutively between each electrode and the conductor. The minimum breakdown voltage shall be in accordance with Table 3.8.2 for round film insulated wire, or as indicated in Part 2 for other wire to which this test applies.

© Copyright 2005 by the National Electrical Manufacturers Association.

Copyright National Electrical Manufacturers Association
Provided by IHS under license with NEMA
No reproduction or networking permitted without license from IHS
Not for Resale

Table 3.8.2
DIELECTRIC BREAKDOWN, MINIMUM VOLTAGE–FOIL METHOD

AWG Size	Standard Round Film Insulated Copper Wire: Single Build	Standard Round Film Insulated Copper Wire: Heavy Build	Heavy Build with Polyamide Topcoat Round Film Insulated Copper Wire
4	–	3700	–
5	–	3700	–
6	–	3600	–
7	–	3500	–
8	1870	3500	–
9	1870	3400	3060

3.8.3 Twisted Pair Method

A specimen of wire shall be formed into a "U" shape and the two legs twisted together the number of 360° rotations specified in Table 3.8.3.1 to form an effective sample length of 4.75 ± 0.25 inches (121 mm ± 6 mm). The total tension on the two legs, and the total number of rotations shall be as shown in Table 3.8.3.2. The closed end loop of the twisted specimen shall be cut and the ends shall be carefully and adequately separated. There shall be no sharp bends in the specimen or damage to the insulation. A source of 60-hertz voltage of a substantially sinusoidal waveform shall be applied between the two conductor legs. Three specimens shall be tested and each specimen shall be in accordance with Table 3.8.3.2 for the particular wire specification in Part 2.

Table 3.8.3.1
TWISTED PAIR METHOD: TENSIONS AND ROTATIONS

AWG Size	Total Tension on Specimen (± 2%)	Total Number of Rotations
8–9*	24 Pounds (107N)	3
10–11	24 Pounds (107N)	3
12–14	12 Pounds (53 N)	4
15–17	6 Pounds (27N)	6
18–20	3 Pounds (13N)	8
21–23	1.5 Pounds (7N)	12
24–26	340 Grams (3.3 N)	16
27–29	170 Grams (1.7 N)	20
30–32	85 Grams (0.8 N)	25
33–35	40 Grams (0.4 N)	31
36–37	20 Grams (0.2 N)	36

* Aluminum only

© Copyright 2005 by the National Electrical Manufacturers Association.

Copyright National Electrical Manufacturers Association
Provided by IHS under license with NEMA
No reproduction or networking permitted without license from IHS
Not for Resale

Table 3.8.3.2
MINIMUM DIELECTRIC BREAKDOWN VOLTAGE–TWISTED PAIR METHOD

AWG Size	Single Build or Type 1		Heavy Build or Type 2		Triple Build or Type 3		Quad Build**	
	Standard	Polyamide topcoat	Standard	Polyamide topcoat	Standard	Polyamide topcoat	Standard	Polyamide topcoat
8	3740*	—	7000*	—	—	—	—	—
8.5	3740*	—	6800*	—	—	—	—	—
9	3740*	—	6800*	—	—	—	—	—
9.5	3740*	—	6800*	—	—	—	—	—
10	3740	—	6800	6120	—	—	—	—
10.5	3740	—	6600	5940	—	—	—	—
11	3740	—	6600	5940	—	—	—	—
11.5	3520	—	6600	5940	—	—	—	—
12	3520	—	6400	5760	—	—	—	—
12.5	3520	—	6400	5760	—	—	—	—
13	3520	—	6400	5760	—	—	—	—
13.5	3520	—	6400	5760	—	—	—	—
14	3520	3170	6330	5690	8450	7600	11000	9900
14.5	3470	3130	6240	5620	8340	7510	10860	9770
15	3430	3090	6160	5550	8230	7410	10720	9650
15.5	3380	3050	6080	5470	8120	7310	10580	9520
16	3340	3010	6000	5400	8020	7220	10440	9400
16.5	3300	2970	5930	5330	7910	7120	10310	9280
17	3250	2930	5850	5260	7810	7030	10170	9150
17.5	3210	2890	5770	5200	7710	6940	10040	9040
18	3170	2850	5700	5130	7610	6850	9910	8920
18.5	3130	2820	5620	5060	7510	6760	9780	8800
19	3090	2780	5550	4990	7410	6670	9650	8690
19.5	3050	2740	5480	4930	7320	6580	9530	8570
20	3010	2710	5410	4870	7220	6500	9400	8460
20.5	2970	2670	5340	4800	7130	6410	9280	8350
21	2930	2640	5270	4740	7030	6330	9160	8240
21.5	2890	2600	5200	4680	6940	6250	9040	8140
22	2850	2570	5130	4620	6850	6170	8920	8030
22.5	2820	2540	5060	4560	6760	6090	8810	7930
23	2780	2500	5000	4500	6670	6010	8690	7820
23.5	2740	2470	4930	4440	6590	5930	8580	7720
24	2710	2440	4870	4380	6500	5850	8470	7620
24.5	2670	2410	4810	4320	6420	5780	8360	7520
25	2640	2370	4740	4270	6330	5700	8250	7420
25.5	2600	2340	4680	4210	6250	5630	8140	7330
26	2570	2310	4620	4160	6170	5550	8040	7230
26.5	2540	2280	4560	4100	6090	5480	7930	7140
27	2500	2250	4500	4050	6010	5410	7830	7040
27.5	2470	2220	4440	4000	5930	5340	7730	6950
28	2440	2200	4380	3950	5860	5270	7630	6860
28.5	2410	2170	4330	3890	5780	5200	7530	6770
29	2380	2140	4270	3840	5700	5130	7430	6690
29.5	2380	2140	4220	3800	5640	5080	7340	6600
30	2380	2140	4220	3800	5640	5080	7340	6600
31	2040	1840	3900	3510	5080	4570	6770	6100
32	2040	1840	3570	3210	4800	4320	6210	5590
33	1700	1530	3250	2920	4230	3810	5640	5080
34	1700	1530	2920	2630	3950	3560	5360	4830
35	1360	1220	2920	2630	3670	3300	4800	4320
36	1360	1220	2600	2340	3390	3050	4520	4060
37	1360	1220	2270	2050	3100	2790	3950	3560

* Aluminum only
** Excludes MW 16-C (Quad)

© Copyright 2006 by the National Electrical Manufacturers Association.

--`,,```,,,,````-`-`,,`,,`,`,,`---

Copyright National Electrical Manufacturers Association
Provided by IHS under license with NEMA
No reproduction or networking permitted without license from IHS
Not for Resale

3.8.4 Wound Pair Method

A wire shall be bent over the hook of the served wire specimen winder (see Figure 3.8.4) and wound in a manner similar to that described in 3.8.3, but without axial twist in the conductor, for a distance of 4.75 ± 0.25 inches (121 ± 6 mm). The tension on each wire of the pair shall be one-half that given in Table 3.8.3.1. The total number of rotations shall be as shown in Table 3.8.3.1. The ends shall be carefully and adequately separated, and there shall be no sharp bends in the specimen or damage to the insulation. A source of 60-hertz voltage of a substantially sinusoidal waveform shall be applied between the two conductor legs. Three specimens shall be tested and each specimen shall meet the requirements of Table 3.8.3.2.

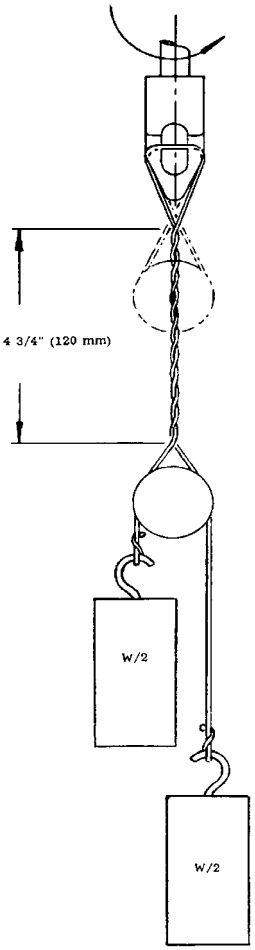

Figure 3.8.4
WOUND PAIR SPECIMEN WINDER

3.8.5 Layer Method

Two specimens shall be wound, one on top of the other, for a distance of approximately 1 inch (25 mm) on a smooth mandrel of an insulating material. The diameter of the mandrel shall be in accordance with Part 2. The ends of each of the windings shall be secured in such a manner that the two layers are maintained in intimate contact, and there is no loosening of the convolutions. A source of 60-hertz voltage of a substantially sinusoidal waveform shall be applied between the two wound layers.

3.8.6 Bend Method

Two undamaged 10-inch (250 mm) specimens of wire shall be elongated 10 percent and bent approximately 4 inches (10 mm) from each end, one flatwise and one edgewise, on a 90-degree angle over a mandrel as specified in Table 3.8.6 in the form of a ⌐ . The specimen shall be bent around the mandrel perpendicular to the axis of the mandrel and under sufficient tension to ensure a uniform bend. During the bending operation, extreme caution shall be observed to prevent external damage to film coating such as may occur due to scraping, cutting, etc. A strip of 1/4-inch (6-mm) wide conductive adhesive metal foil tape shall be wrapped around the wire smoothly and firmly a minimum of 1-1/2 complete turns at the center of each bend. A source of 60-hertz voltage of a substantially sinusoidal waveform shall be applied separately and consecutively between each foil electrode and the conductor.

Table 3.8.6
BEND METHOD MANDREL SIZES

Flatwise Bend-Thickness		Edgewise Bend-Width		Mandrel (±1%)	
inches	mm	inches	mm	inches	mm
Less than 0.050	Less than 1.27	—	—	0.200	5.08
0.050–0.063	1.30–1.60	—	—	0.250	6.35
0.064–0.075	1.63–1.90	—	—	0.300	7.62
0.076–0.088	1.93–2.24	0.076–0.088	1.93–2.24	0.350	8.89
0.089–0.100	2.26–2.54	0.089–0.100	2.26–2.54	0.400	10.2
0.101–0.125	2.57–3.18	0.101–0.125	2.57–3.18	0.500	12.7
0.126–0.150	3.20–3.81	0.126–0.150	3.20–3.81	0.600	15.2
0.151–0.187	3.84–4.75	0.151–0.187	3.84–4.75	0.750	19.1
0.188–0.219	4.78–5.56	0.188–0.219	4.78–5.56	0.900	22.9
0.220–0.250	5.59–6.35	0.220–0.250	5.59–6.35	1.00	25.4
0.251–0.310	6.38–7.87	0.251–0.310	6.38–7.87	1.25	31.8
—	—	0.311–0.375	7.90–9.52	1.50	38.1
—	—	0.376–0.435	9.55–11.1	1.75	44.4
—	—	0.436–0.500	11.1–12.7	2.00	50.8

© Copyright 2005 by the National Electrical Manufacturers Association.

Copyright National Electrical Manufacturers Association
Provided by IHS under license with NEMA
No reproduction or networking permitted without license from IHS
Not for Resale

3.8.7 Cylinder Method

A straight piece of wire with the insulation removed from one end shall be connected to the upper terminal as shown in Figure 3.8.7 and wound once around the cylinder. The cylinder shall be made of metal with a polished contact surface and shall have a diameter of 25.0 ± 0.5 mm (0.98 ± 0.02 in.). In addition the cylinder shall be mounted horizontally and electrically connected to one terminal of the AC test supply voltage.

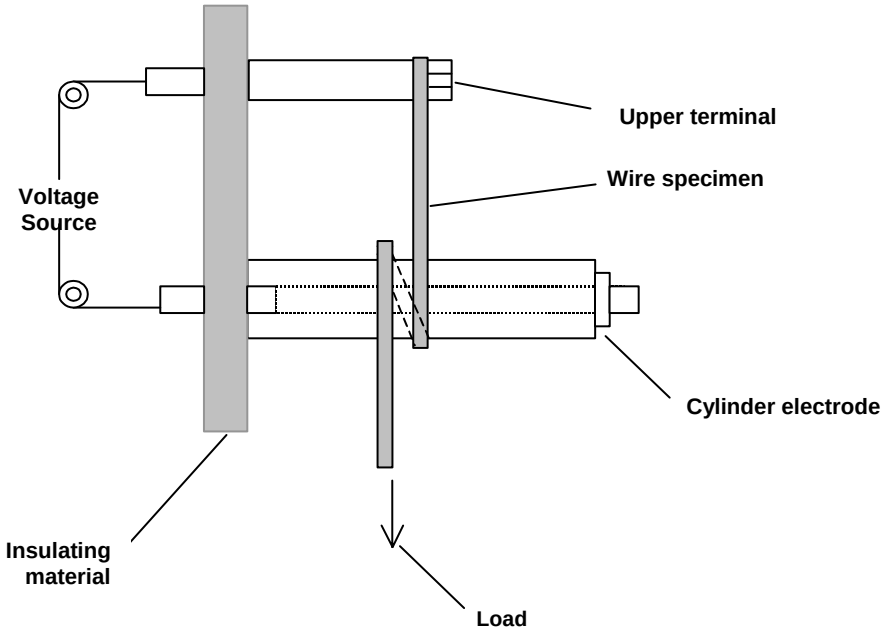

Figure 3.8.7
TEST APPARATUS FOR CYLINDER METHOD

A load, as specified in Table 3.8.7.2 shall be applied to the lower end of the wire to maintain close contact with the cylinder surface. Each individual value shall meet or exceed the minimum voltages specified in Table 3.8.7.3 for a given insulation build. The test voltage shall be started at zero and increased at a uniform rate of 20 to 500 V/s, according to Table 3.8.7.1, so that breakdown does not occur in less than 5 seconds. The test shall be conducted at room temperature. Five specimens shall be tested. The five individual results shall be reported.

Table 3.8.7.1
RATE OF INCREASE IN VOLTAGE – CYLINDER METHOD

Breakdown Voltage (Volts)		Rate of Increase (V/Sec)
Over	Up to and including	
—	500	20
500	2,500	100
2,500	—	500

© Copyright 2005 by the National Electrical Manufacturers Association.

Copyright National Electrical Manufacturers Association
Provided by IHS under license with NEMA
No reproduction or networking permitted without license from IHS
Not for Resale

Table 3.8.7.2
CYLINDER METHOD TEST LOADS

AWG	Load (grams) ± 10%,	Load (N) ± 10%
38	39	0.400
39	29	0.300
40	25	0.250
41	20	0.200
42	15	0.150
43	12	0.120
44	12	0.120
45	10	0.100
46	6.0	0.060
47	6.0	0.050
48	4.0	0.040
49	3.0	0.030
50	2.5	0.025
51	2.0	0.020
52	1.5	0.015
53	1.3	0.013
54	1.3	0.013
55	1.3	0.013
56	1.3	0.013

Table 3.8.7.3
MINIMUM DIELECTRIC BREAKDOWN VOLTAGE – CYLINDER METHOD

	Single Build or Type 1		Heavy Build or Type 2		Triple Build or Type 3		Quad Build	
AWG Size	Standard	Polyamide topcoat	Standard	Polyamide topcoat	Standard	Polyamide topcoat	Standard	Polyamide topcoat
38	500	450	950	850	1400	1250	1835	1650
39	500	450	900	800	1300	1175	1695	1525
40	425	375	850	750	1200	1075	1550	1395
41	425	375	700	650	1100	1000	1410	1270
42	375	350	700	650	990	890	1270	1145
43	325	300	650	600	845	760	1130	1015
44	300	275	600	550	845	760	1130	1015
45	275	250	550	500	760	685	990	890
46	250	225	475	425	690	620	990	890
47	225	200	425	375	—	—	—	—
48	190	170	375	350	—	—	—	—
49	170	150	325	300	—	—	—	—
50	150	130	300	275	—	—	—	—
51	130	110	275	250	—	—	—	—
52	120	100	250	225	—	—	—	—
53	110	100	225	200	—	—	—	—
54	100	90	200	175	—	—	—	—
55	100	90	200	175	—	—	—	—
56	90	80	175	150	—	—	—	—

© Copyright 2005 by the National Electrical Manufacturers Association.

Copyright National Electrical Manufacturers Association
Provided by IHS under license with NEMA
No reproduction or networking permitted without license from IHS
Not for Resale

3.9 CONTINUITY

Warning: Electrical Hazard – Extremely high voltages may be present. The design of the equipment must comply with good engineering practices and incorporate safety features. This includes grounding of metal parts to avoid electric shock and burns to trained personnel who are operating the equipment.

3.9.1 General

3.9.1.1 Definitions

fault (or discontinuity): Any defect (or series of defects) in 1 inch (25 mm) of wire that allows sufficient current flow to activate the fault detection circuit.

test voltage: open circuit DC voltage (± 5%) applied across the film insulation.

fault detection current: current flowing (± 10%) from the electrode sheave through the fault detection circuit.

sensitivity: minimum current that will activate the fault counter in the fault detection circuit.

3.9.1.2 Retesting

In case of failure under prevailing laboratory conditions, two additional specimens of wire shall be dried for 20 ± 1 minutes in a forced air oven at 60°C ± 3°C (140°F ± 4.5°F). The sample shall be cooled to room temperature and testing in accordance with the foregoing procedure. Gloves shall be worn when preparing test specimens or during handling of magnet wire for this test.

3.9.1.3 Note on Transition to New Electrodes

Until December 31, 2004, the use of dual electrode sheave electrodes as described in NEMA MW 1000-1997 shall be considered acceptable as an alternative to the graphite fiber brush electrodes as described in 3.9.2. In the case of differences in test values between the two types of electrodes, the values obtained using graphite fiber brush electrodes shall prevail.

3.9.2 High-Voltage Direct Current Continuity (14-44 AWG)

One hundred (+2, -0) feet (30.5 +0.6, -0 mm) of film-insulated wire shall be passed through a graphite fiber brush electrode at a speed of 60 ± 3 feet (18 ± 1 m) per minute. Grounded freely rotating metallic guide sheaves shall be used, one before and one after the graphite fiber brush electrode assembly. The conductor shall be electrically grounded by means of either a ground terminal or a grounded take-up drum. The pay-off equipment shall be designed to prevent damage to the wire being tested and shall provide sufficient tension to straighten the wire for complete contact with the entire length of graphite fiber brush. The open circuit test voltage maintained between the energized (positive polarity) graphite fiber brush electrode and the grounded conductor shall be indicated in Table 3.9.2.1.

Table 3.9.2.1
TEST VOLTAGES (DC VOLTS ±5%) AND MAXIMUM FAULT COUNT PER 100 FEET

Build Self-Bonding	Single Type 1	Heavy Type 2	Triple Type 3	Quad
Material/AWG Range				
Copper				
14–24	1000	1500	2000	2500
25–30	750	1000	1500	2000
31–35	500	750	1000	1500
36–44	350	500	750	1000
Maximum Fault Count per 100 feet	15	5	3	3
Aluminum				
14–24	750	1500	—	—
25–28	500	1000	—	—
Maximum Fault Count per 100 feet	25	10	—	—

© Copyright 2005 by the National Electrical Manufacturers Association.

Copyright National Electrical Manufacturers Association
Provided by IHS under license with NEMA
No reproduction or networking permitted without license from IHS
Not for Resale

The high voltage power supply shall be regulated and shall provide filtered direct current voltage up to 3000 volts, free of transient over-voltage "spikes." All voltage settings shall be checked with a high impedance device, such as an electrostatic voltmeter. Sufficient internal resistance shall be provided so that rapid collapse of the applied voltage occurs when a fault is detected. Rapid recovery of the voltage to the test level is also required.

A surge dampening resistor of 4.7 megohms ± 10 percent shall be installed in the high voltage line at the electrode connection. No shielding shall be used on the high-voltage lead since a minimum capacitance to ground is sought during switching and counting events.

The graphite fiber brush electrode assembly shall be constructed so that the conductive brushes completely surround and contact the wire surface for a length of 1 ± 0.1 inches (25.4 ± 2.5 mm). The graphite fiber brush electrode shall be inspected, cleaned, or replaced if excessive wear or accumulation of foreign material is present.

The graphite fiber brush electrode assembly shall be electrically isolated for the duration of the test to prevent false readings at the specified voltages.

The test device shall include such wire handling equipment as will provide the specified wire speed stipulated and shall be capable of handling wire sizes 14 through 44 AWG. A length indicator with a preset shut-off feature shall be included so that exact lengths can be monitored. The drive shall have sufficient power to maintain speed under the heaviest load.

The steady state short circuit current shall be limited internally by series resistance to 25 ± 5 microamperes at any test voltage setting. A 50-megohm fault resistance at the electrode sheaves shall not cause more than a 75 percent drop in voltage at the graphite fiber brush electrode at any voltage setting.

The sensitivity of the fault detection circuit shall be such that the threshold fault current will be as shown in Table 3.9.2.2. The speed of response of the fault circuit to a single fault pulse or to the accumulated time of multiple, closely spaced fault pulses (all occurring within 83 milliseconds) shall be 4 to 6 milliseconds. The fault counter circuit shall be designed to repeat at a rate of 450 ± 45 counts per minute when bare wire is passing through the graphite fiber brush electrode.

Table 3.9.2.2
THRESHOLD FAULT CURRENT

DC Test Voltage, Volts	Threshold Fault Current Microamperes
3000	16
2500	14
2000	12
1500	10
1000	8
750	7
500	6
350	5

The fault counter shall be a digital readout device such as an electromechanical counter or its electronic equivalent. Means for resetting the counter to zero shall be included.

The maximum number of discontinuities (faults) shall be in accordance with Table 3.9.2.1, as applicable for the particular requirements in Part 2.

3.9.3 Low-Voltage Direct Current Continuity (45-56 AWG)

Warning: Chemical Hazard – Mercury has been recognized to be a hazardous substance by regulatory agencies. Primary routes of exposure are through inhalation and ingestion. The information contained in the Material Safety Data Sheet (MSDS) for Mercury must be adhered to while using, handling, or disposing this

© Copyright 2005 by the National Electrical Manufacturers Association.

Copyright National Electrical Manufacturers Association
Provided by IHS under license with NEMA
No reproduction or networking permitted without license from IHS
Not for Resale

material. Mercury spills need to be treated with great caution. Information on how to handle spills can be obtained from the supplier.

A 100 (+2, -0) feet (30.1 +0.6, -0 meters) of film coated wire shall be passed through a bath of mercury or other suitable material (see Figure 3.9.3) at a speed of 100 ±10 feet per minute (30.5 ± 3 meters). The test circuit shall be so arranged that the discontinuity indicating device will operate when the resistance between the conductor and the bath of mercury or other suitable material is 5,000 ohms or less but will not operate when the resistance is 10,000 ohms or more. The test circuit shall include a repeating circuit that will indicate 600 breaks per minute ± 10 percent when a bare wire is passed through the bath of mercury or other suitable material. The direct current test voltage of 20 ± 1 volts shall be applied between the bath and the conductor. The number of discontinuities shall be recorded, and shall not exceed the values in Table 3.9.3.

Table 3.9.3
LOW VOLTAGE CONTINUITY – MAXIMUM FAULT COUNT PER 100 FEET

Film Insulation Build Self-Bonding	Single Type 1	Heavy Type 2
Material/ AWG Range		
Copper/ 45–56 AWG	25	10

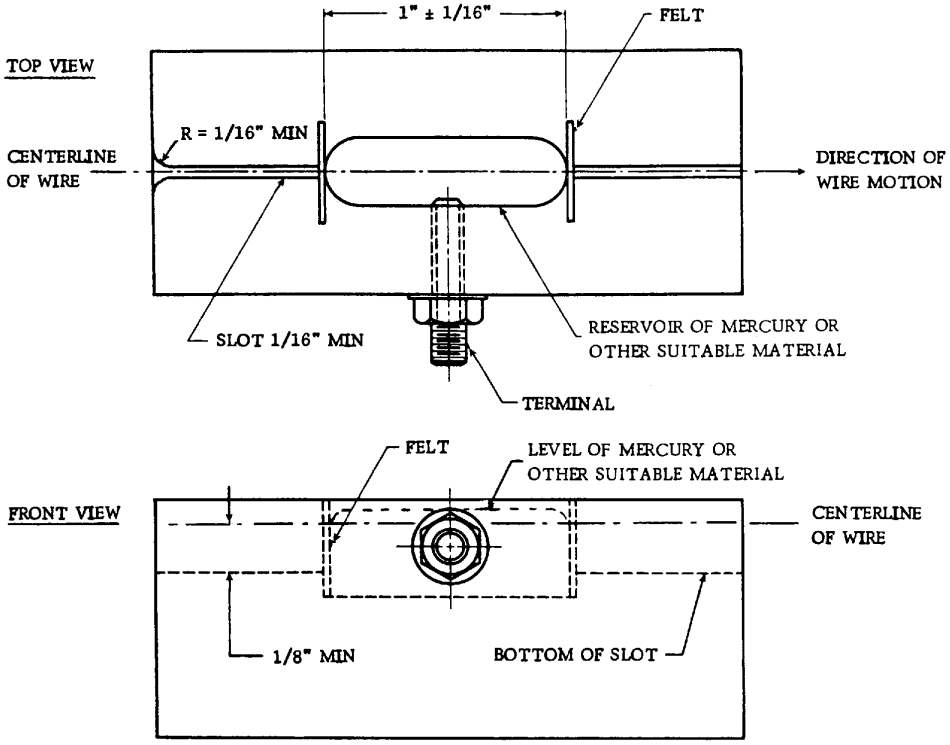

Figure 3.9.3
BATH OF MERCURY OR OTHER SUITABLE MATERIAL

© Copyright 2005 by the National Electrical Manufacturers Association.

Copyright National Electrical Manufacturers Association
Provided by IHS under license with NEMA
No reproduction or networking permitted without license from IHS
Not for Resale

3.10 DISSIPATION FACTOR

Warning: Chemical Hazard – Mercury has been recognized to be a hazardous substance by regulatory agencies. Primary routes of exposure are through inhalation and ingestion. The information contained in the Material Safety Data Sheet (MSDS) for mercury must be adhered to while using, handling, or disposing this
material. Mercury spills need to be treated with great caution. Information on how to handle spills can be obtained from the supplier.

3.10.1 Principle of Test

A wire specimen is treated as a capacitor where the insulation is the dielectric, and the conductor acts as one electrode and a conducting medium as the second electrode. This capacitor is connected into a circuit, which operates at the required frequency and is suitable for measurement of the capacitive and resistive components from which the dielectric dissipation factor is obtained.

3.10.2 Equipment

- An automatic RLC bridge producing a sinusoidal frequency at 1.0 ± 0.1 kHz, or equivalent;
- A circulating air oven capable of maintaining a temperature within ± 3ºC;
- Test method A
  a) Metal blocks either maintained at 25 ± 5ºC, or having a heating system that controls the temperature to ±1°C
  b) Conducting suspension
- Test method B - Metal bath according to Figure 3.10.2, containing a suitable liquid metal (alloy) maintained at 25 ± 5ºC, or having a heating system that controls the temperature to ±1°C.

3.10.3 Preparation of Specimen

Gloves shall be worn when preparing test specimens or during handling of magnet wire for this test.

3.10.3.1 Specimen for Metal Bath Electrode

A straight piece of wire shall be bent into a U-shape to fit into the metal bath as shown in Figure 3.10.2.

© Copyright 2005 by the National Electrical Manufacturers Association.

Copyright National Electrical Manufacturers Association
Provided by IHS under license with NEMA
No reproduction or networking permitted without license from IHS
Not for Resale

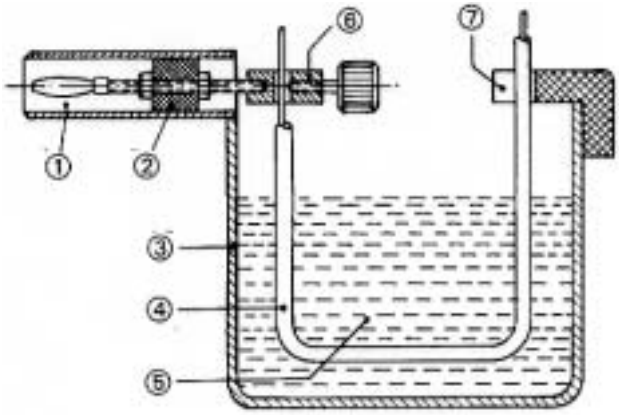

1 – Plug
2 – Insulating material
3 – Metallic container
4 – Specimen
5 – Electrode
6 – Terminal
7 – Insulated clamp

Figure 3.10.2
ELECTRODE AND SPECIMEN ARRANGEMENT FOR DISSIPATION FACTOR TEST

3.10.3.2 Specimen for Conductive Suspension Electrode

3.10.3.2.1 Round wire, 38 AWG and Finer

A straight piece of wire approximately 150 mm (6 inches) in length shall be wound around a straight piece of 12–18 AWG copper wire and subsequently coated with a conductive suspension, for example by brushing a layer of an aqueous graphite dispersion on the specimen. The coated length shall be 100 ± 6 mm (4 ± 0.25 inches) The specimen shall then be dried.

3.10.3.2.2 Round wire, Larger than 38 AWG, and Rectangular and Square Wire

A straight piece of wire approximately 6 inches (150 mm) in length shall be coated with a conductive suspension, for example, by brushing a layer of an aqueous graphite dispersion on the wire. The coated length shall be 4 ± 0.25 inches (100 ± 6 mm). The specimen shall then be dried.

3.10.4 Procedure

3.10.4.1 Test Method A

The specimen shall be placed between the two metal blocks, with the conductively coated section within the edges of the blocks. On rectangular wire specimens, the dissipation factor of the film shall be measured on the wider sides of the magnet wire.

NOTE–In order to obtain accurate readings, it is essential to establish intimate contact between the surface electrode and the outer surface of the magnet wire specimen being tested.

3.10.4.2 Test Method B

The specimen shall be connected into the metal bath as shown in Figure 3.10.2.

© Copyright 2005 by the National Electrical Manufacturers Association.

Copyright National Electrical Manufacturers Association
Provided by IHS under license with NEMA
No reproduction or networking permitted without license from IHS
Not for Resale

3.10.4.3 Measurement

For either method, the specimen shall be connected to the RLC bridge and shall be allowed to reach the test temperature, and the dissipation factor read.

3.10.4.4 Retesting

In the case of nonconformance, another specimen shall be wiped with a soft cloth or tissue and conditioned in a circulating air oven for 20 ± 1 minutes at 60 ± 3ºC. The wire specimen shall be removed from the oven, cooled to room temperature, and tested.

3.10.5 Result

The dissipation factor and the test temperature shall be recorded.

3.11 RESERVED

3.12 COVERAGE

3.12.1 Mandrel Wrap Method

The specimen shall be wound ten turns around the mandrel having the diameter specified in Part 2, and examined with normal vision. Round wire test specimens shall be evenly wound in a close helix around the mandrel and under sufficient tension to ensure a compact winding. Care shall be exercised not to introduce an axial twist into the specimen.

3.12.2 Flat Bend Method

The specimen shall be bent flatwise 180 degrees around a mandrel having the diameter specified in Part 2, and examined with normal vision. The specimen shall be bent around the mandrel perpendicular to the axis of the mandrel and under sufficient tension to ensure a uniform bend.

3.13 SOLDERABILITY

Warning: Chemical Hazard – Lead has been recognized to be a hazardous substance by regulatory agencies. Primary routes of exposure are by inhalation and ingestion. The information contained in the Material Safety Data Sheet (MSDS) for lead, tin, flux, and alcohol must be adhered to while using, handling, or disposing of these products. Adequate ventilation or forced exhausting of solder pot vapors and products of decomposition from various solderable insulations may be necessary to comply with environmental regulations.

Warning: Thermal Hazard – Care must be exercised in removing test specimens from the solder part to avoid skin burns.

3.13.1 General

A 60/40 tin-lead solder conforming to ASTM B 32, Grade B shall be used for all tests. Any dross that forms must be removed from the surface of the solder before each test.

The solder pot shall have a volume sufficient to ensure maintenance of a uniform solder temperature during specimen immersion. The temperature shall be measured within 1/4 inch (6 mm) from the immersed end of the specimen. The temperature must be controllable within ± 5°C (9°F) of the relevant specification temperature indicated in Part 2.

In the event the specimen being tested does not meet the requirements of Part 2 at the specified solder time, a new specimen shall be dipped in a suitable rosin-alcohol flux (10 parts of Grade WW water white rosin mixed with 90 parts of denatured ethyl alcohol by weight) prior to retesting.

© Copyright 2005 by the National Electrical Manufacturers Association.

Copyright National Electrical Manufacturers Association
Provided by IHS under license with NEMA
No reproduction or networking permitted without license from IHS
Not for Resale

3.13.2 Self-Supported Specimen Method (9-36 AWG)

A single-strand, straight length of wire shall be cut to a 6-inch (150-mm) test specimen. The specimen prepared for test shall be immersed vertically to a depth of 1-1/4 to 1-15/16 inches (32 to 33 mm) at the center of the solder pot for the time equal to or less than indicated in Part 2. After removal from the pot, the lower 1/2 inch (13 mm) of the segment immersed in the pot shall be examined under 6x to 10x magnification.

3.13.3 Fixture-Supported Specimen Method (37-56 AWG)

A specimen of wire shall be supported by means of a suitable carrier that allows the wire to be held free for at least 1.3 inches ± 0.2 inches (33.0 ± 5.1 mm) between the points of support. The material used for the carrier shall be such that the solder bath does not undergo any contamination. The dimensions of the carrier shall not lead to appreciable changes in the bath temperature during immersion. A suggested carrier configuration is shown in Figure 3.13.3.

The specimen and fixture so prepared shall be immersed vertically to a depth of 1.25 to 1.50 inches (32 mm to 38 mm) at the center of the solder pot for the time equal to or less than that indicated in Part 2. After removal from the pot, examination shall be made under the 15x magnification and shall be restricted to the center 1.0 ± 0.1-inch (25.4 ± 2.5-mm) free length section between the supports. Wire specimens finer than 52 AWG may be double stranded and twisted two to five times to avoid breakage during immersion.

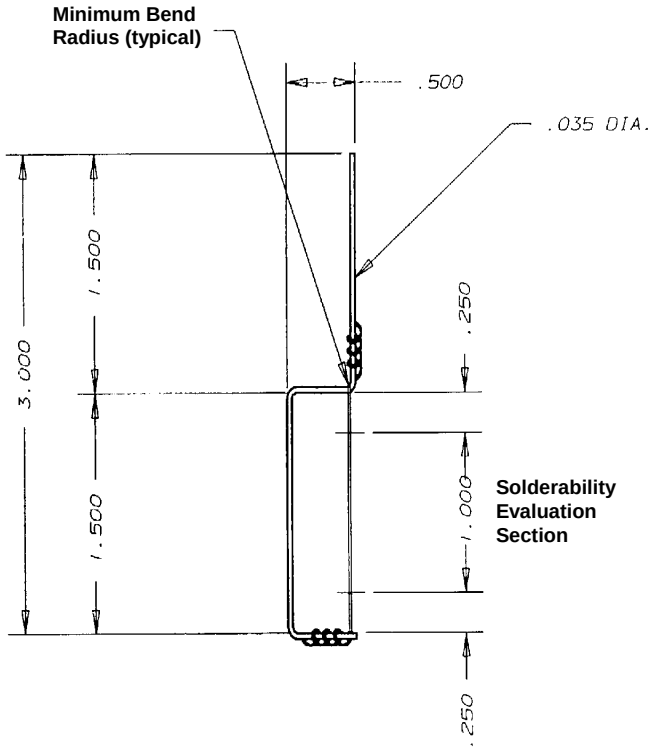

Figure 3.13.3
SOLDERABILITY TEST SPECIMEN FIXTURE

© Copyright 2005 by the National Electrical Manufacturers Association.

Copyright National Electrical Manufacturers Association
Provided by IHS under license with NEMA
No reproduction or networking permitted without license from IHS
Not for Resale

PERIODIC CONFORMANCE TESTS

3.50 THERMOPLASTIC FLOW

Warning: Thermal Hazard – Care must be exercised in removing test specimens from the oven to avoid skin burns.

3.50.1 Apparatus

The thermoplastic flow tester shall be capable of exerting a constant load perpendicular to, and directly over, the right-angle crossover of the specimen. The tester shall include a control thermocouple of suitable temperature range and a pyrometer to indicate the temperature measured by the control thermocouple. The actual specimen temperature at each test position under the load at the crossover position shall be measured throughout the expected temperature range by a calibrated thermocouple-pyrometer or other suitable measuring device, and compared to the control or indicated temperature. The resulting temperature differences shall be used to appropriately correct the indicated thermoplastic flow temperature. The testing chamber shall be of suitable size to maintain a temperature rise at a rate of 10°C (18°F) to 45°C (81°F) per minute to not less than 50°C (90°F) below the temperature specified in Part 2 and 5 ± 1°C (9°± 2°F) per minute temperature rise from that point to failure. The failure detector shall be so constructed that a current flow of 20 ± 10 milliamperes at 115 volts 60 hertz between the crossed wires of the specimen will indicate failure.

3.50.2 Procedure

The thermoplastic flow values for all round 14 AWG and finer film insulated magnet wire shall be evaluated according to the conditions specified in Table 3.50.2. The thermoplastic flow values for round film insulated wire larger than 14 AWG and square and rectangular film insulated magnet wire shall be based on the test results of that same insulation system on 18 AWG copper heavy build magnet wire.

The specimen shall consist of two lengths of wire crossed at right angles to each other in the apparatus. The intersection of the two lengths of wire shall be carefully loaded as specified in Table 3.50.2. The temperature shall be increased at 10°C (18°F) to 45°C (81°F) per minute until 55 ± 5°C (99 ± 9°F) below the thermoplastic flow temperature specified in Part 2 is attained and then raised 5 ± 1°C (9 ± 2°F) per minute until failure of the specimen occurs. The indicated temperature, corrected in accordance with 3.50.1, shall be taken as the thermoplastic flow temperature of that specimen. For wire sizes 14–35 AWG, five specimens shall be tested per sample, and the median (the third highest value) shall be the thermoplastic flow temperature. For 36 AWG and finer wire sizes, nine specimens shall be tested per sample, and the median (the fifth highest value) shall be the thermoplastic flow temperature.

Table 3.50.2
THERMOPLASTIC FLOW TEST LOADS

	Test Loads ±2%	
Size Ranges, AWG	**Test Load (grams)**	**Test Load (Newtons)**
14–18	2000	19.60
19–24	1000	9.80
25–26	600	5.88
27–29	300	2.94
30–36	250	2.45
37–40	150	1.47
41–44	100	0.98

© Copyright 2005 by the National Electrical Manufacturers Association.

Copyright National Electrical Manufacturers Association
Provided by IHS under license with NEMA
No reproduction or networking permitted without license from IHS
Not for Resale

3.51 SOLUBILITY

Warning: Chemical Hazard – Follow Material Safety Data Sheets (MSDS) instructions on using, handling, and disposal of solvents specified in Part 2.

3.51.1 Round Film Insulated Wire (10 AWG and Finer)

3.51.1.1 Preparation of Specimens

Specimens of un-stretched and unbent film coated wire, each 12 inches (305 mm) long, which have been stress annealed for 10 (+1, -0) minutes at 150 ± 3°C (302 ± 5°F) shall be immersed for at least 6 inches (152 mm), without bending, for 30 (+5, -0) minutes in the liquids specified in Part 2 and maintained at 60 ± 2°C (140 ± 4°F). A separate specimen is required for each liquid.

3.51.1.2 Needle Scrape (10–30 AWG)

The specimens shall then be removed from the solvent and tested within 2 minutes, but not less than 1 minute, on a device which scrapes the surface of the film coating at right angles to the length of the wire with a 0.016 inch (0.406 mm) diameter steel needle. The needle shall be loaded to 50% of the minimum average grams-to-fail unidirectional scrape load as specified in the corresponding table in Part 2 (See Figure 3.51.1). The specimens shall be wiped with a clean cloth or tissue to remove any liquid and shall be straightened by hand, without stretching, to remove kinks. After the wire is inserted in the test apparatus, the weighted needle shall be lowered gently to the surface of the film coating and the wire scraped at 2 inches (51 mm) per second ± 10% along the portion that was immersed. Exposure of the bare conductor shall be indicated by an electrical circuit having a potential of 7.5 ± 1.5 volts between the needle and the conductor.

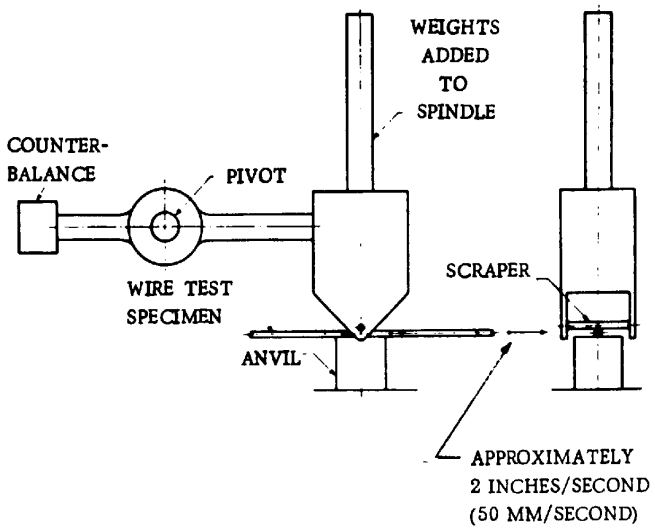

Figure 3.51.1
MACHINE FOR SOLUBILITY SCRAPE

3.51.1.3 Cheesecloth Wipe (Finer than 30 AWG)

The specimens shall then be removed from the solvent and, within 2 minutes but not less than 1 minute, drawn once between the folds of four thicknesses of cheesecloth pressed firmly between the forefinger and the ball of the thumb. Any removal of the coating caused by kinks or mechanical injury shall not be considered as failure to meet the requirements of Part 2.

3.51.2 Round Wire Larger than 10 AWG, Rectangular and Square Wire

Specimens of un-stretched and unbent film coated wire, each 12 inches (305 mm) long, which have been stress annealed for 30 (+5,-0) minutes at 150 ± 3°C (302 ± 5°F) shall be immersed at least 6 inches (150 mm), without bending, for 30 (+5,-0) minutes in the liquids specified in Part 2 and maintained at 60 ± 2°C, (140 ± 4°F). Each specimen shall be immersed in one liquid only. The specimens shall then be tested in accordance with 3.51.1.3

© Copyright 2005 by the National Electrical Manufacturers Association.

Copyright National Electrical Manufacturers Association
Provided by IHS under license with NEMA
No reproduction or networking permitted without license from IHS
Not for Resale

3.52 DIELECTRIC BREAKDOWN AT RATED TEMPERATURE

Warning: Electrical Hazard – Extremely high voltage may be present. Personnel performing the test must be adequately trained and qualified. The design of the test equipment must comply with good engineering practices and incorporate safety procedures. This includes grounding of metal parts to avoid electric shock and burns to operators performing the test.

Warning: Thermal Hazard – Care must be exercised in handling the wire samples at elevated temperatures to avoid skin burns.

Warning: Chemical Hazard – Ozone gas may be generated under high voltage conditions during testing. Test area must have adequate ventilation.

3.52.1 Test Procedure

Each of five specimens, prepared in accordance with Clause 3.8.3, shall be placed in a suitable holder or holders, then placed in a circulating air oven and connected to high-voltage feed-through connectors.

The temperature of the oven shall be raised to the temperature equivalent to the thermal class rating (see Part 2) of the specimen ± 2°C (4°F).

Fifteen minutes, but not more than 30 minutes, after the oven reaches the temperature equivalent to the thermal class rating of the specimen ± 2°C (4°F), a source of 60-hertz voltage as described in 3.8.1 shall applied to the specimen through the feed-through connector at the oven. To determine compliance with the Part 2 specification, the breakdown voltage shall be measured in accordance with 3.8.3 and the five results averaged.

© Copyright 2005 by the National Electrical Manufacturers Association.

Copyright National Electrical Manufacturers Association
Provided by IHS under license with NEMA
No reproduction or networking permitted without license from IHS
Not for Resale

3.53 TOLUENE / ETHANOL COMPATIBILITY

Warning: Chemical Hazard – Regulatory agencies have established permissible exposure levels for toluene and ethyl alcohol. Primary routes for exposure are through absorption and inhalation. Consult Material Data Safety Sheets (MSDS) for proper handling, use, and disposal of these products.

3.53.1 Principle of Test

This test evaluates the chemical compatibility of polyvinyl formal insulation with a 30/70 mixture of toluene and ethyl alcohol that is at its boiling point.

3.53.2 Equipment & Materials

- Circulating air oven capable of maintaining a temperature within ± 3ºC;
- Erlenmeyer flask or suitable vessel
- Boiling chips or glass beads
- Reflux condenser
- Heating plate
- Toluene: Commercial grade 3 degree
- Ethyl Alcohol: Denatured with Methanol and Methyl Isobutyl Ketone: SDA formula 3A or equivalent

3.53.3 Specimen preparation

A straight length of magnet wire shall be conditioned by heating the wire specimen in a re-circulating oven for 10 (+1, -0) minutes at 125 ± 3°C (257 ± 5°F).

3.53.4 Procedure

An Erlenmeyer flask shall contain a mixture of 30 percent commercial grade 3 degree toluene and 70 percent denatured ethyl alcohol by volume. Boiling chips or glass beads shall be added to the flask to control the boiling as well as a reflux condenser to prevent the loss of solvents from the mixture. The flask shall be heated on a hot plate until the mixture is boiling.

Immerse the previously conditioned wire specimen 4 to 5 inches (102 to 127 mm) in the mixture without bending for 5 (+0.5, -0) minutes.

After removal from the mixture, square and rectangular specimens, and round wire specimens sizes 4 through 29 AWG shall be examined with normal vision. Sizes 30 through 44 AWG shall be examined by 6x to 10x magnification.

3.53.5 Result

No swelling or blistering shall be visible in the film coating. Swelling of the film within 1/2 inch (12.7 mm) of the immersed end shall not constitute failure. When testing self-bonding wire, the swelling, blistering, or removal of the self-bonding outer coating shall not be considered as failure.

© Copyright 2005 by the National Electrical Manufacturers Association.

Copyright National Electrical Manufacturers Association
Provided by IHS under license with NEMA
No reproduction or networking permitted without license from IHS
Not for Resale

3.54 TRANSFORMER OIL RESISTANCE AND HYDROLYTIC STABILITY

Warning: Thermal Hazard – Care must be exercised in handling the apparatus and wire samples at elevated temperatures, to avoid skin burns.

3.54.1 Principal of Test

The transformer oil resistance and hydrolytic stability of all film insulated sizes and shapes shall be evaluated using 18 AWG heavy build magnet wire. It is recognized that water, a breakdown product of cellulose, is the primary agent that causes deterioration of the magnet wire film-insulation in liquid-filled electrical equipment. Sufficient time and temperature are required to break down the cellulose. This test method measures the effect of this generated moisture in a sealed test environment.

3.54.2 Test Apparatus

This test requires the following equipment: tubes – 1 in. by 12 in. (25 mm by 305 mm) capable of being sealed, a forced air oven in compliance with ASTM D 2436, a pressure vessel, stainless steel, glass or glass-lined capable of withstanding a minimum pressure of 870 psi (6.0 MPa) and equipped with a pressure tube assembly containing a rupture disk set at 800 psi (5.5 MPa) maximum. The inside dimensions must be such that the specimens are completely immersed in the insulating liquid. The forced air oven must be capable of providing a constant temperature of 150 $\pm$ 3°C (302 $\pm$ 5°F) for 1000 $\pm$ 10 hours.

3.54.3 Short Term Exposure Test

Prepare two tubes with 80 $\pm$ 1 ml of transformer oil and to only one tube add 0.19 to 0.24 ml (approximately 4 or 5 drops) of distilled water. The tube containing no water will provide the control data. Place six straight 8 $\pm$ 0.5 in. (203 $\pm$ 12 mm) unelongated specimens of 18 AWG heavy film-insulated magnet wire in each tube, seal the tubes, and place in an oven set at 150 $\pm$ 3°C (302 $\pm$ 5°F) for 24 $\pm$ 0.5 hours. After conditioning for 24 hours, remove the tubes and cool to room temperature before opening. After removal from the tubes inspect the specimens for loss of film integrity.

© Copyright 2005 by the National Electrical Manufacturers Association.

Copyright National Electrical Manufacturers Association
Provided by IHS under license with NEMA
No reproduction or networking permitted without license from IHS
Not for Resale

3.54.4 Long Term Exposure Test

This procedure is written for a 400 ml vessel[1], which requires approximately 302 in. (7671 mm) of 18 AWG heavy film-insulated magnet wire. Table 3.54.4 shows the pressure vessel components as a percent of the vessel volume.

Prepare 10 dielectric twisted pair specimens in accordance with 3.8.3: five flexibility specimens elongated by sudden jerk to 20% and wrapped on a 3d mandrel in accordance with 3.3.1, and five specimens elongated to 10% in accordance with 3.4.

Table 3.54.4
PRESSURE VESSEL COMPONENTS

Component	Pressure Vessel Volume %
Transformer Oil	65
Kraft Paper	4
Film Insulation	0.26
Steel	0.5

The pressure vessel shall contain the above prepared wire samples and the components listed in Table 3.54.4.

NOTE—It is necessary to add the remaining quantity of film insulated magnet wire from the original 302 in. wire sample in order to bring the total volume of enamel to the specified value of 0.26% volume.

Dry a quantity of insulating liquid, in excess of 65% of the total volume of the pressure vessel by heating to 110 ± 3°C (230 ± 5°F) and hold for 30 ± 0.5 min. and then de-aerate under a vacuum system at 15 ± 0.5 mm of mercury for 10 ± 1 min. Process dielectric liquids that vaporize readily with controlled degassing.

Place the clean pressure vessel containing the test specimens, the Kraft paper, and metal in an oven at 105 ± 3°C (221 ± 5°F) for 24±0.5 hrs. to dry and then place under the vacuum system at 45 ± 1 mm of mercury for 10 ± 1 min. Open the pressure vessel while still hot, and carefully add the dry de-aerated insulating liquid. Ensure all test materials are immersed in the insulating liquid. Close the vessel and either evacuate to remove the air above the oil, or evacuate and fill with nitrogen or other inert atmosphere and seal. Age the sealed system in an oven at 150 ± 3°C (302 ± 5°F) for 1000 ± 10 hours.

At the end of 1000 hours, cool the pressure vessel to room temperature, open, and remove one-half of the dielectric specimens, test to breakdown and record the results. Remove the remaining dielectric specimens from the pressure vessel, dry for 30 (+5, -0) min. at 125 ± 3°C (257 ± 5°F), and then test to breakdown for determining compliance with Part 2 requirements.

NOTE—Hydrolytic degradation or water absorption can cause loss of dielectric breakdown strength of insulating films. If only absorption occurs, drying the specimens prior to dielectric measurement will produce a recovery in dielectric strength.

Remove the flexibility and elongation specimens from the pressure vessel, wipe clean of excess oil, and visually inspect for film-insulation defects.

3.55 REFRIGERANT (R-22) EXTRACTION

Warning: Mechanical Hazard – For safe operation of this test, an autoclave having a pressure capacity of up to 3000 psi (20.7 MPa) is recommended. The heating systems should be equipped with a device designed to deactivate the system when the pressure inside the pressure vessel approaches a prescribed critical value. The autoclave should be equipped with a pressure relief / rupture disk system for emergency relief of excessive pressures. A device designed to deactivate the heating system when the water flow through the condenser coil is interrupted should also be a consideration.

Warning: Chemical Hazard – Chemicals used in this test have been classified as hazardous by regulatory agencies. Primary routes of exposure are through absorption and inhalation. Follow instructions provided in the Material Safety Data Sheets (MSDS) for the safe handling, use, and disposal of these chemicals.

[1] For different sized vessels, refer to ASTM D 1676 to determine the volume of the components.

© Copyright 2005 by the National Electrical Manufacturers Association.

Copyright National Electrical Manufacturers Association
Provided by IHS under license with NEMA
No reproduction or networking permitted without license from IHS
Not for Resale

NOTE—Due to environmental concerns, alternate refrigerants are being proposed for the replacement of R-22. These alternate materials will most likely have different parameters, i.e., critical temperature, and cannot be substituted directly for R-22 in the test method described below. In all probability, different time and temperature requirements will be necessary to satisfactorily complete the procedure. For additional information, please contact the refrigerant manufacturer, or your magnet wire manufacturer, or both.

3.55.1 Preparation of Specimens

14-24 AWG round magnet wire shall be wound into eight coils having the dimensions of approximately 5/8 inch (16 mm) diameter and 1 5/8 inches (41 mm) high. The recommended number of wire turns per coil shall be according to Table 3.55.1, and should result in a total film insulation weight of 0.6 ± 0.1 gram.

Table 3.55.1
RECOMMENDED TURNS/COIL

AWG	Heavy Build	Triple Build	Quad Build
14	35	24	18
15	42	28	21
16	49	33	25
17	59	39	29
18	68	46	34
19	81	54	40
20	93	64	47
21	111	74	55
22	134	89	64
23	153	104	74
24	180	122	87

The eight coils shall be conditioned in a forced draft oven at 150 ± 3°C (302 ± 5°F) for 15 (+1,-0) minutes, cooled to room temperature, thoroughly washed in methylene chloride (Dichloromethane, ACS grade, 99.5% min by GC) and dried in a forced draft oven at 150 ± 3°C (302 ± 5°F) for 15 (+1,-0) minutes. After cooling for 30 (+5,-0) minutes, the eight coils shall be weighed together to the nearest 0.0001 gram. The combined weight of the eight specimens shall be the "total initial weight."

3.55.2 Environmental Conditioning

The eight specimens shall be placed in a 450-milliliter modified Wiley siphon cup (see Figure 3.55.1). Care shall be taken to ensure that the specimen coils do not block the siphon tube opening. Typical dimensions are provided in Table 3.55.2. The specimens shall be suspended from the condenser coil (see Figure 3.55.2) in the top portion of a 2000-milliliter pressure vessel (similar to Parr autoclave #4632) below the condenser (See Figure 3.55.3). The pressure vessel shall be assembled and charged with 700 ± 25 grams of monochlorodifluoromethane (R-22). The pressure vessel shall be placed in a controlled heating system, and the condenser water supply and drain line properly connected. The temperature of the controlled heating system and the water flow running through the condenser shall be adjusted to maintain a reflux rate of 20 to 25 cup discharges per hour for six hours.

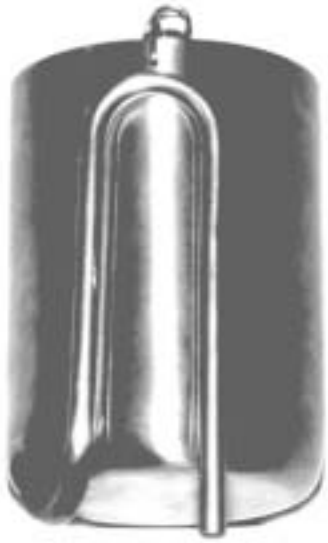

Figure 3.55.1
REFRIGERANT
EXTRACTABLE SIPHON CUP

NOTE–A pressure control range of 500 to 580 psig. (3.4 to 4.0 MPa) has been experienced with R-22.

The autoclave pressure shall be kept at last 60 psig (0.4 MPa) below the critical pressure of R-22 (722 psi absolute) (4.98 MPa).

Table 3.55.2
Typical Siphon Cup Dimensions

Description	mm	inches (approximate)
Height of cup	82	3.23
Diameter of cup	84	3.31
Diameter of tubing	5	0.20

© Copyright 2005 by the National Electrical Manufacturers Association.

Copyright National Electrical Manufacturers Association
Provided by IHS under license with NEMA
No reproduction or networking permitted without license from IHS
Not for Resale



Figure 3.55.2
CONDENSER COIL



Figure 3.55.3
CONDENSER COIL SIPHON CUP ASSEMBLY

3.55.3 Collecting Residue

After completion of the environmental conditioning, the pressure vessel shall be removed from the heating source and cooled with refrigeration or solid carbon dioxide (dry ice) to below –30 °C to liquefy the refrigerant. The cooled pressure vessel shall be carefully opened. The coils and siphon cup shall be rinsed with methylene chloride and the rinse shall be poured into the pressure vessel. The refrigerant shall be evaporated slowly to within approximately 1/4 inch (6 mm) of the bottom of the vessel. The walls of the pressure vessel shall be washed with two successive rinses of 100 milliliters each of methylene chloride. The solvents shall be evaporated under a hood or in a well-ventilated area to within 1/4 inch (6 mm) of the bottom of the vessel. The liquid sample shall then be transferred to a pre-weighed, pre-dried, aluminum weighing dish, using a rinse consisting of 15 milliliters of methylene chloride. The liquid shall then be evaporated to dryness at 150 ± 3°C (302 ± 5°F) for 60 (+5, -0) minutes, then cooled to room temperature in a desiccator.

© Copyright 2005 by the National Electrical Manufacturers Association.

Copyright National Electrical Manufacturers Association
Provided by IHS under license with NEMA
No reproduction or networking permitted without license from IHS
Not for Resale

3.55.4 Determinations of Results

The aluminum dish, with a residue, shall be weighed to the nearest 0.0001 gram. The initial tare weight of the aluminum dish shall be subtracted. The difference is the "total residue weight" of the original coils.

The insulation shall be removed from the original coils by a suitable chemical means that will not damage the conductor, and the bare conductors dried for 15 (1, -0) minutes at 150 ± 3°C (302 ± 5°F). The conductors shall be cooled to room temperature in a desiccator and weighed immediately to the nearest 0.0001 gram. The sum of the weights of the coils is the "total conductor weight."

The percent extractables shall be calculated as follows:

$$Percent\,Extractables = \frac{Total\,residue\,weight}{Total\,initial\,weight - Total\,conductor\,weight} \times 100$$

3.56 DIELECTRIC BREAKDOWN AFTER R-22 CONDITIONING

Warning: Mechanical Hazard – For safe operation of this test, an autoclave having a pressure capacity of up to 3000 psi (20.7 MPa) is recommended. The heating systems should be equipped with a device designed to deactivate the system when the pressure inside the pressure vessel approaches a prescribed critical value. The autoclave should be equipped with a pressure relief / rupture disk system for emergency relief of excessive pressures.

Warning: Chemical Hazard – Chemicals used in this test have been classified as hazardous by regulatory agencies. Primary routes of exposure are through absorption and inhalation. Follow instructions provided in the Material Safety Data Sheets (MSDS) for the safe handling, use, and disposal of these chemicals.

Adequate ventilation is necessary since ozone gas may be generated during the dielectric strength test.

NOTE—Due to environmental concerns, alternate refrigerants are being proposed for the replacement of R-22. These alternate materials will most likely have different parameters, i.e., critical temperature, and cannot be substituted directly for R-22 in the test method described below. In all probability, different time and temperature requirements will be necessary to satisfactorily complete the procedure. For additional information, please contact the refrigerant manufacturer, or your magnet wire manufacturer, or both.

3.56.1 Preparation of Specimens

Five dielectric twisted pairs of (14–24 AWG) film insulated wire shall be prepared in accordance with 3.8.3 and conditioned in a forced draft oven at 150 ± 3°C (302 ± 5°F) for 4 hours (+5, -0) minutes.

3.56.2 Environmental Conditioning

The conditioned specimens shall be loaded in a pressure vessel (Parr autoclave #4632, or the equivalent) having a 2000-milliliter capacity, and an inside diameter of approximately 4 inches (102 mm). The loaded pressure vessel shall be scaled, weighed, and evacuated to 200 ± 20 mm of mercury (30 ± 3 Pa).

The pressure vessel shall then be filled with 3.1 ± 0.1 lbs. (1.4 kg ± 50 g) of monochlorodifluoromethane (R-22). The loaded pressure vessel shall be heated to obtain a pressure gage reading of 600 ± 50 psig (4.20 ± 0.35 MPa). The pressure shall be maintained for 72 ± 1 hours, after which time the pressure vessel shall then be removed from the heat source and cooled with refrigeration or solid carbon dioxide (dry ice) to below –30 ºC to liquefy the refrigerant. After completion of the environmental conditioning, the pressure vessel shall be removed from the heating source and cooled with refrigeration or solid carbon dioxide (dry ice) to below –30 °C to liquefy the refrigerant.

© Copyright 2005 by the National Electrical Manufacturers Association.

Copyright National Electrical Manufacturers Association
Provided by IHS under license with NEMA
No reproduction or networking permitted without license from IHS
Not for Resale

3.56.3 Evaluation of Specimens

When the pressure in the vessel falls to 10 psig. (0.007 MPa) or less, the cover shall be carefully removed and the twisted pairs transferred within 60 seconds to a forced draft oven at 150 ± 3°C (302 ± 5°F). The specimens shall remain in the oven for 10 +1,-0 minutes.

After the specimens have been removed from the oven and cooled to room temperature, the dielectric breakdown voltage of the twisted pairs shall be determined in accordance with 3.8.3. The five readings shall be recorded and averaged.

3.57 BOND

3.57.1 Preparation of Specimens

3.57.1.1 Sizes 18 and 26 AWG

The appropriate mandrel shall be selected from Table 3.57.1 and sprayed with a suitable release agent.

NOTE–Fluorocarbon or silicone sprays have been found to be satisfactory.

The wire shall be de-reeled over the end of the spool as a 3-inch single-layer coil is wound onto the prepared mandrel, using a winding tension not to exceed that shown in Table 3.57.1. The coil and mandrel shall be vertically mounted in a suitable holder with the free end of the coil at the top. The specified bonding weight from Table 3.57.1 shall be placed on the vertically mounted coil, providing a downward force during bonding. (See Figure 3.57.1.) Three coils shall be prepared.

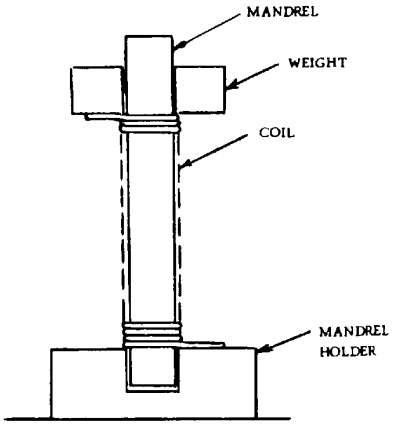

Figure 3.57.1
BOND COIL PREP FIXTURE

3.57.1.2 Size 36 AWG

The appropriate mandrel shall be selected from Table 3.57.1 and sprayed with a suitable release agent (see 3.57.1.1). The wire shall be dereeled over the end of the spool as a coil of fifty continuous turns is wound onto the prepared mandrel. The coils and mandrel shall be vertically mounted in a suitable holder. The specified bonding weight from Table 3.57.1 shall be placed on the vertically mounted coils as described in 3.57.1.1. Three coils shall be prepared.

Table 3.57.1
BOND TEST PARAMETERS

	Mandrel Diameter*		Maximum Winding Tension		Bonding Load*		Test Load* After Heat Bonding		Test Load* After Solvent Bonding	
AWG	inches	mm	grams	newtons	grams	newtons	kilograms	newtons	kilograms	newtons
18	0.250	6.35	1220	12.0	408.0	4.00	9.0	88.3	4.5	44.1
26	0.157	3.99	200	2.0	76.0	0.75	1.6	15.7	0.80	7.85
36	0.039	0.99	12.2	0.12	15.3	0.15	0.025	0.25	0.0122	0.12

* Tolerance ± 2%

3.57.2 Heat and Solvent Bonding

3.57.2.1 Heat Bonding – Sizes 18, 26, and 36 AWG

Warning: Thermal Hazard – Care must be exercised in removing the holder assembly from the oven at elevated temperatures to avoid skin burns.

The holder assembly shall be placed in a forced air oven for 60 minutes (+5, -0) minutes at 150 ± 3°C (302 ± 5°F) or as specified in Part 2. The assembly shall be removed from the oven and cooled to room temperature.

© Copyright 2005 by the National Electrical Manufacturers Association.

Copyright National Electrical Manufacturers Association
Provided by IHS under license with NEMA
No reproduction or networking permitted without license from IHS
Not for Resale

The coils shall be removed from the mandrels, inspected for breaks or physical damage, and tested in accordance with 3.57.3 and/or 3.57.4.

3.57.2.2 Solvent Bonding – Sizes 18,26, and 36 AWG

Warning: Chemical Hazard – Adequate ventilation must be provided to remove hazardous fumes generated from the solvents used for bonding. Primary routes of entry are by absorption and inhalation. Consult Material Safety Data Sheets (MSDS) of the solvent being used to determine proper handling, use, and disposal procedures.
The specimen shall be dipped into the specified solvent for approximately 5 seconds. The bonded coil shall be immediately placed in the holder with the specified bonding weight from Table 3.57.1 and allowed to dry for 60 minutes (+5, -0) minutes at room temperature.

The coils shall be removed from the mandrels, dried for 15 (+1, -0) minutes at 100 ± 3°C (212 ± 5°F), inspected for breaks or physical damage, and tested in accordance with 3.57.3.

3.57.3 Room Temperature Bonding

3.57.3.1 Sizes 18 and 26 AWG

Each 3-inch test coil shall be placed in a test fixture identical to that shown in Figure 3.57.3.1 with regard to all dimensions and radii shown. The appropriate test weight, as shown in Table 3.57.1 shall be the total load to be applied to the center of the coil, which includes the knife edge, support, and added weight. The load shall be lowered gently and allowed to hang for 5 seconds.

The use of a stress-strain analyzer shall be permitted to apply an increasing load. The cross-head speed shall be between 0.5 and 1 inch (12 mm and 25 mm) per minute. Separation of the first or last turn shall be disregarded.

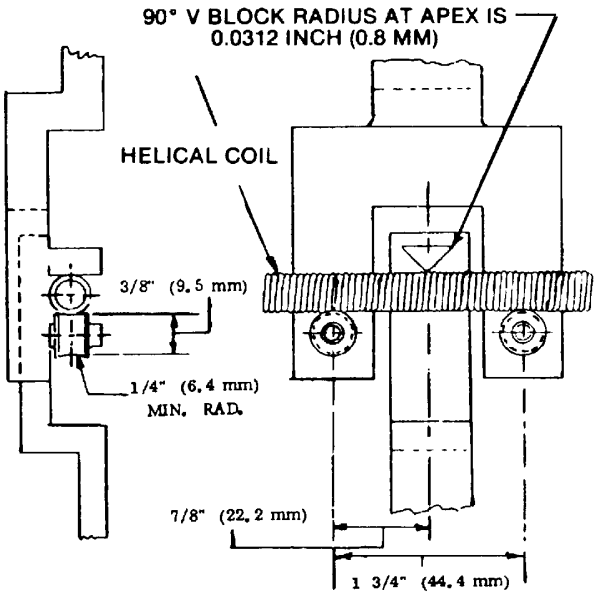

Figure 3.57.3.1
BOND STRENGTH TEST FIXTURE

3.57.3.2 Size 36 AWG

Each coil shall be hung by one of its ends and loaded with the weight indicated in Table 3.57.1 (See Figure 3.57.3.2). When attaching the load, any additional shock must be avoided. The weight shall be allowed to hang for 5 seconds. Separation of the first or last turn shall be disregarded.

3.57.4 Elevated Temperature Bond Test Procedure

The bond test fixture as shown in Figure 3.57.2 shall be placed in a re-circulating oven capable of maintaining 250 ± 2°C. The oven temperature should be stabilized at the set temperature specified in Part 2 ± 2°C. The specimen to be tested shall then be placed in the fixture in the oven. 15 minutes but not more than 30 minutes after the oven again reaches set temperature ± 2°C, the sample shall be tested in accordance with 3.57.3.1. Use of a stress strain analyzer shall be permitted to apply an increasing load until the sample is broken. The cross-head speed shall be between 0.5 and 1 inch (12 and 25 mm) per minute. The peak load is recorded.

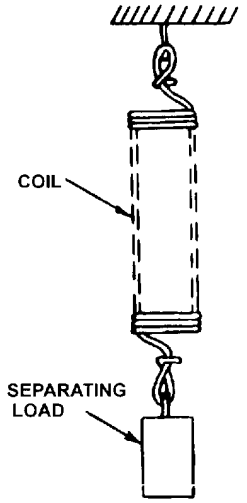

Figure 3.57.3.2
BOND TEST FIXTURE

© Copyright 2005 by the National Electrical Manufacturers Association.

Copyright National Electrical Manufacturers Association
Provided by IHS under license with NEMA
No reproduction or networking permitted without license from IHS
Not for Resale

3.58 THERMAL ENDURANCE

3.58.1 Test Procedure

The thermal endurance of all film insulated sizes and shapes shall be evaluated using 18 AWG heavy (or Type 2) magnet wire.

Thermal class ratings shall be based upon tests performed on unvarnished specimens of 18 AWG round wire with a heavy film coating, prepared and tested in accordance with ASTM D 2307. Wire size 28 AWG shall be permitted for use as a substitute for 18 AWG where the specification's size range is limited to 25 AWG and finer.

The "end point" chosen for purposes of this publication is 20,000 hours. This means that the graph of the test data that is obtained when following the test procedure given in ASTM D 2307 must show an extrapolated life for the wire of 20,000 hours or more at or above the thermal class rating.

The philosophy established in ANSI/IEEE Std. 1 was followed in setting the 20,000-hour end point.

The tested life of the specimen being evaluated shall be not less than 5000 hours at least 20°C above the thermal class rating.

The thermal class of fibrous covered or tape wrapped wire shall be based on experience.

The Institute of Electrical and Electronics Engineers has not established test procedures for the thermal evaluation of fibrous covered or tape wrapped magnet wire. However, ANSI/IEEE Std. 1 points out that the thermal rating of insulation can be established either by experience or by accepted tests.

For example, glass fiber insulation has, by experience, become established as a component in both Class 130 and 155 insulation systems.

Glass fiber silicone treated insulation has, by experience, become established as a component in Class 200 insulation systems.

Polyester-glass-fiber insulation is more than 50 percent inorganic material and has, by experience, become established as a component in Class 155 insulation systems and in Class 200 when silicone treated.

Glass fiber and polyester-glass-fiber insulations, when treated with high-temperature, non-silicone organic varnish have, by experience, become established as components in Class 180 insulation systems. In this case the high temperature organic varnish must also exceed a 180°C temperature index when tested in accordance with ASTM D 1932.

3.59 SCRAPE RESISTANCE

This test procedure is applicable to round film insulated wire sizes 10 through 30 AWG.

3.59.1 Apparatus

Scrape resistance of the wire specimen shall be determined using a machine such as that shown in Figure 3.59.1. The machine shall provide a scraping action in one direction along the longitudinal axis of the film insulated wire to be tested, at a rate of 16 inches (406 mm) $\pm$ 10 percent per minute.

The machine shall automatically apply an increasing scraping force by the movement of the scraping device along a pivoted loading arm whose lower edge is graduated to provide a multiplying factor.

The weighted scraping device shall contain a polished 0.009 inch (0.23 mm) diameter steel piano wire or needle located between two jaws which support the steel piano wire or needle rigidly, without sagging or curvature, at right angles to the direction of stroke.

© Copyright 2005 by the National Electrical Manufacturers Association.

Copyright National Electrical Manufacturers Association
Provided by IHS under license with NEMA
No reproduction or networking permitted without license from IHS
Not for Resale

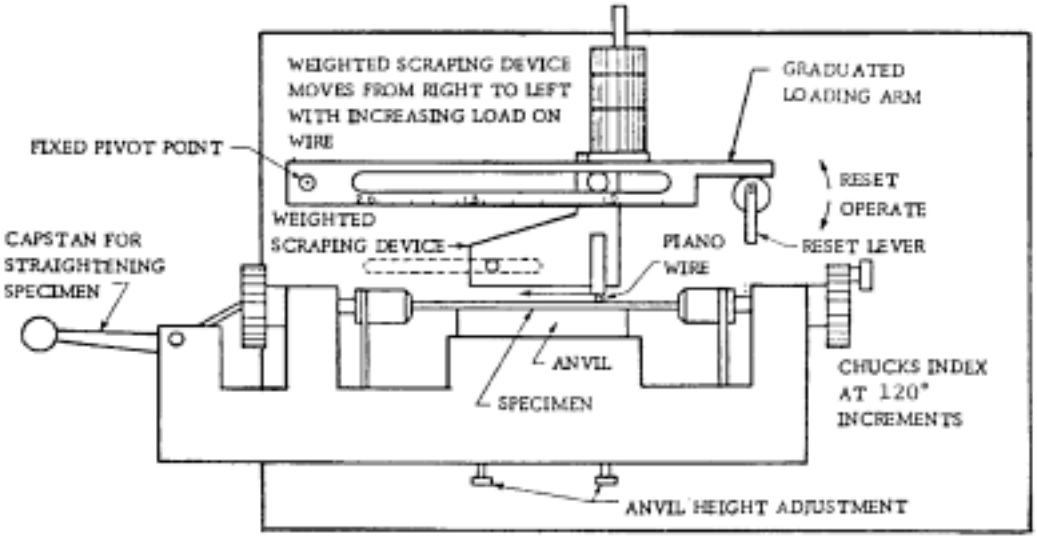

Figure 3.59.1
MACHINE FOR SCRAPE RESISTANCE

The machine shall be equipped with two adjustable clamping jaws that can be indexed at each 120° position to rotate the specimen, and with a supporting anvil that can be suitably adjusted to support the specimens.

The machine shall be equipped with an electrical circuit which limits the current to 20.0 milliamperes at 7.5 ± 1.5 volts, between the conductor and the piano wire or needle scraper. The circuit shall be so designed that the machine stops when the film insulation is removed and the bare conductor exposed for approximately 1/8 inch (3 mm).

3.59.2 Test Procedure

A specimen of film insulated wire shall be wiped with a clean cloth or tissue, placed in the machine, and straightened by elongating it not more than 1 percent to remove kinks. The specimen shall then be secured in the clamping jaws, and the supporting anvil adjusted to contact the underside of the specimen.

An initial load of approximately 90 percent of the minimum individual "grams-to-fail" value specified in Table 3.59.1 or 3.59.2 shall be applied to the loading arm. This initial device shall be lowered gently onto the surface of the film insulation and the scraping action started. The scraping action shall continue until the conductor is exposed and the machine stops.

The multiplying factor at which the machine shuts off shall be read from the scale on the loading arm. The product of this factor and the initial load applied shall be recorded as the "grams-to-fail" value.

The test procedure shall be repeated twice, indexing the clamps holding the wire to expose the wire surface 120° and 240° from the original position, and the same information recorded. The three individual "grams-to-fail" values shall then be averaged. The average and individual grams-to-fail shall not be less than the values given in Table 3.59.1 or 3.59.2, as applicable to the particular wire specification in Part 2.

© Copyright 2005 by the National Electrical Manufacturers Association.

Copyright National Electrical Manufacturers Association
Provided by IHS under license with NEMA
No reproduction or networking permitted without license from IHS
Not for Resale

Table 3.59.1
STANDARD SCRAPE RESISTANCE OF ROUND FILM INSULATED MAGNET WIRE
MW 5, 9, 15, 17, 24, 28, 30, 35, 72, 73, 74, 76, 80, 81, 83

AWG	Copper, minimum grams-to-fail								Aluminum, minimum grams-to-fail			
	Single Build		Heavy Build		Triple Build		Quad Build*		Single Build		Heavy Build	
Size	Average	Individual	Average	Individual	Average	Individual	Average	Individual	Average	Individual	Average	Individual
10	840	715	1490	1270	—	—	—	—	505	430	895	760
10.5	840	715	1490	1270	—	—	—	—	505	430	895	760
11	840	715	1490	1270	—	—	—	—	505	430	895	760
11.5	840	715	1490	1270	—	—	—	—	505	430	895	760
12	840	715	1490	1270	—	—	—	—	505	430	895	760
12.5	840	715	1490	1270	—	—	—	—	505	430	895	760
13	840	715	1490	1270	—	—	—	—	505	430	895	760
13.5	840	715	1490	1270	—	—	—	—	505	430	895	760
14	840	715	1490	1270	1735	1475	—	—	505	430	895	760
14.5	810	690	1445	1230	1675	1425	—	—	485	415	865	735
15	780	665	1400	1190	1620	1375	—	—	470	400	840	715
15.5	755	645	1355	1150	1570	1335	—	—	455	385	810	690
16	735	625	1310	1115	1525	1295	—	—	440	375	785	670
16.5	710	605	1270	1080	1475	1255	—	—	425	360	760	645
17	690	585	1230	1045	1425	1210	—	—	415	350	740	625
17.5	665	565	1190	1010	1380	1175	—	—	400	340	715	605
18	645	550	1150	980	1335	1135	—	—	390	330	690	590
18.5	620	530	1110	945	1295	1100	—	—	375	315	665	565
19	600	510	1070	910	1255	1065	—	—	360	305	640	545
19.5	580	490	1035	880	1215	1035	—	—	345	295	620	525
20	560	475	1000	850	1180	1000	—	—	335	285	600	510
20.5	540	460	970	825	1145	975	—	—	325	275	580	495
21	525	445	940	800	1115	945	—	—	315	265	565	480
21.5	505	430	910	775	1080	920	—	—	305	255	540	465
22	490	415	880	750	1045	890	—	—	295	250	520	450
22.5	475	400	850	725	1010	860	—	—	285	240	505	435
23	460	390	820	700	975	830	—	—	275	235	490	420
23.5	445	375	795	675	940	800	—	—	265	225	475	405
24	430	365	770	655	910	770	—	—	260	220	460	395
24.5	415	350	745	635	880	745	—	—	250	210	445	380
25	400	340	720	615	850	720	—	—	245	205	430	370
25.5	390	330	695	595	820	700	—	—	235	195	415	360
26	380	325	675	575	795	675	—	—	230	190	405	350
26.5	365	310	655	555	765	650	—	—	220	180	395	335
27	355	300	635	540	735	625	—	—	215	175	385	325
27.5	345	290	615	525	710	605	—	—	205	165	370	315
28	335	285	595	510	690	585	—	—	200	160	360	310
28.5	320	275	575	495	665	570	—	—	190	150	350	300
29	310	265	560	480	645	550	—	—	185	145	340	290
29.5	300	255	540	465	625	535	—	—	175	135	330	280
30	295	250	525	450	605	515	—	—	170	130	320	270

* Under investigation

NOTE–Requirements for half-AWG sizes are calculated from the average of the nearest full AWG size rounded down to the next lowest 5 g.

© Copyright 2006 by the National Electrical Manufacturers Association.

Copyright National Electrical Manufacturers Association
Provided by IHS under license with NEMA
No reproduction or networking permitted without license from IHS
Not for Resale

Table 3.59.2
REDUCED SCRAPE RESISTANCE OF ROUND FILM INSULATED MAGNET WIRE
MW 2, 26, 27, 75, 77, 78, 79, 82

AWG Size	Copper, minimum grams-to-fail					
	Single Build		Heavy Build		Triple Build	
	Average	Individual	Average	Individual	Average	Individual
14	740	630	1310	1120	—	—
14.5	710	605	1270	1080		
15	685	585	1230	1045	—	—
15.5	665	565	1190	1010		
16	645	550	1155	980	—	—
16.5	625	530	1115	950		
17	605	515	1080	920	—	—
17.5	585	500	1045	890		
18	570	485	1010	860	—	—
18.5	550	465	975	830		
19	530	450	940	800	—	—
19.5	510	435	910	775		
20	495	420	880	750	—	—
20.5	475	405	850	725		
21	460	390	825	705	—	—
21.5	445	375	800	680		
22	430	365	775	660	—	—
22.5	415	355	745	635		
23	405	345	720	615	—	—
23.5	390	330	700	595		
24	380	320	680	575	—	—
24.5	365	310	655	555		
25	350	300	635	540	745	630
25.5	340	290	615	520	725	610
26	335	285	595	505	700	590
26.5	320	275	575	490	675	570
27	310	265	560	475	645	550
27.5	300	255	540	460	625	525
28	295	250	525	450	605	515
28.5	285	240	510	435	585	500
29	275	235	495	420	565	480
29.5	265	225	475	405	550	465
30	260	220	460	395	530	450

© Copyright 2006 by the National Electrical Manufacturers Association.

Copyright National Electrical Manufacturers Association
Provided by IHS under license with NEMA
No reproduction or networking permitted without license from IHS
Not for Resale

Appendix A
Reference test conditions and procedures for film-insulated magnet wire

Title of Test	ASTM D 1676 Paragraph Film Insulated	ASTM D 2307 Paragraph Film Insulated	ASTM D 3353 Paragraph Fibrous Covered	NEMA Standards Publication MW 1000 Clause Number			
				Round		Rectangular	
				Film Insulated	Fibrous Covered	Film Insulated	Fibrous Covered
Dimensions	100–106	—	7.1–7.6	3.2.1.1	3.2.1.3	3.2.2.1	3.2.2.2
Adherence and flexibility	141–148	—	8.1–8.5	3.3.1	3.3*	3.3.3	3.3*
Elongation	122–129	—	4.1–4.6	3.4	3.4	3.4	3.4
Heat shock	156–162	—	—	3.5	—	3.5	—
Springback	154–155	—	—	3.7	3.7.2	3.7.2	3.7.2
Dielectric breakdown	69–75	—	9.1–9.6	3.8	3.8	3.8	3.8
Continuity, high-voltage	38–45	—		3.9.2	—	—	
Continuity, low voltage	46–53	—	—	3.9.3	—	—	—
Completeness of cure	54–60	—	—	3.10	—	3.10	—
Solderability	178–185	—	—	3.13	—	—	—
Thermoplastic flow	61–68	—	—	3.50	—		—
Solubility	22–28	—	—	3.51.1	—	3.51.2	—
Dielectric breakdown at rated temperature	83–89	—	—	3.52	—	3.52	—
Transformer oil resistance and hydrolytic stability	186–195	—	—	3.54	—	3.54	—
Refrigerant 22 extraction	130–140	—	—	3.55	—	—	—
Retained dielectric after Refrigerant 22 conditioning	90–99	—	—	3.56	—	—	—
Bond	4–12	—	—	3.57	—	—	—
Thermal endurance	—	1–13	—	3.58.1	3.58.1	3.58.1	3.58.1
Scrape resistance	170–177	—	—	3.59	—	—	—

* The appropriate Adherence and Flexibility test depends on the product specification and size. See Part 2.

© Copyright 2005 by the National Electrical Manufacturers Association.

Copyright National Electrical Manufacturers Association
Provided by IHS under license with NEMA
No reproduction or networking permitted without license from IHS
Not for Resale

<This page is intentionally left blank.>

© Copyright 2005 by the National Electrical Manufacturers Association.

Copyright National Electrical Manufacturers Association
Provided by IHS under license with NEMA
No reproduction or networking permitted without license from IHS
Not for Resale

Appendix B
MAGNET WIRE PACKAGING AND LABELING

(This Appendix supersedes NEMA Standards Publications MW 700, MW 755, MW 760, and MW 770)

B.1 GENERAL

B.1.1 Scope

This Appendix covers the following:

Dimensional, physical, and visual characteristics of newly molded, straight and tapered flange plastic spools and reels for packaging of magnet wire (See B.2).

Recommended test procedures (See B.3).

Guidelines for size of printing format, data items, and the application of data labels to magnet wire spools, reels and cartons (See B.4).

B.1.2 Normative References

B.1.2.1 Packaging

The following normative documents contain provisions that, through their references, constitute provisions of this part. By reference herein, these publications are adopted in whole or in part. And are available form the organizations listed below.

Deutsche Elektrotechnische Kommission im DIN und VDE (DKE)
Stresemannallee 15
D-6000 Frankfurt AM Main 70

DIN 46399-1 *Delivery Spools for Bare and Insulated Wires: Dimensions*

DIN 46399-2 *Delivery Spools for Bare and Insulated Wires: Technical Terms of Delivery for Spools of Plastic*

International Electrotechnical Commission (IEC)
3, rue de Varembe
Case postale 131
CH-1211 Geneva 20

IEC 60264-2-1 *Packaging of Winding Wires- Part 2 - Cylindrical Barreled Delivery Spools Section 1 – Basic Dimensions*

IEC 60264-4-1 *Packaging of Winding Wires- Part 4 – Methods of Test Section 1 – delivery spools made from thermoplastic material*

B.1.2.2 Labeling

The following normative documents have been adopted in whole or in part, and are available from the organizations listed below:

© Copyright 2005 by the National Electrical Manufacturers Association.

Copyright National Electrical Manufacturers Association
Provided by IHS under license with NEMA
No reproduction or networking permitted without license from IHS Not for Resale

American National Standards Institute (ANSI)
11 West 42nd Street
New York, NY 10036

ANSI X12.3-1986 *Standards for Electronic Data Communication*

Automated Identification Manufacturers (AIM)
1326 Freeport Road
Pittsburgh, PA 15238

Uniform Symbology Specification Manual for Code 39-1986

Automotive Industry Action Group (AIAG)
North Park Plaza, Suite 830
17117 West Nine Mile Road
Southfield, MI 48075

AIAG-B-1-1988 *Bar Code Symbology*
AIAG-B-3-1990 *Shipping Parts Identification Label*
AIAG-B-10-1995 *Shipping Parts Identification Label*

Federation of Automated Coding Technologies
1326 Freeport Road
Pittsburgh, PA 15238

FACT-1, 1989 *FACT Data Identifier Standard*

National Electrical Manufacturers Association (NEMA)
1300 North 17th Street, Suite 1847
Rosslyn, VA 22209

Electrical Industry Bar Code Application Guidelines—1987

B.1.3 Definitions

Definitions that are applicable to magnet wire products are found in Part 1 of this Standards Publication. The following definitions apply to this Appendix only. See Figure B-1 for an illustration of selected terms.

arbor hole: The hole in a flange through which the arbor shaft passes (Figure B-1).

drive slot: The hole or slot in either or both flanges, which serves as the means for driving the reel on the machine take-up (Figure B-1).

finger holes: Holes in the top flanges that serve as a means for lifting reels by using fingers.

flange: The part of the spool/reel that is perpendicular to the barrel, which defines the traverse length. Several different flange spool/reel arrangements are described in the indented section below.

double taper flange, straight barrel spool/reel: A spool/reel that contains two tapered flanges with a straight barrel within the winding area, as shown in Figure B-5.

double taper flange, tapered barrel reel: A spool/reel that contains two tapered flanges with a tapered barrel within the winding area, as shown in Figure B-6.

single tapered flange tapered barrel spool/reel: A spool/reel that contains one tapered flange with a tapered barrel within the winding area, as shown in Figure B-7.

--`,,```,,,,````-`-`,,`,,`,`,,`---© Copyright 2005 by the National Electrical Manufacturers Association.

Copyright National Electrical Manufacturers Association
Provided by IHS under license with NEMA
No reproduction or networking permitted without license from IHS Not for Resale

straight flange straight barrel spool/reel: A spool/reel that contains two straight flanges, and a straight barrel within the winding area, as shown in Figures B-2 and B-3

straight flange tapered barrel reel: A spool/reel that contains two straight flanges, and a tapered barrel within the winding area, as shown in Figure B-4.

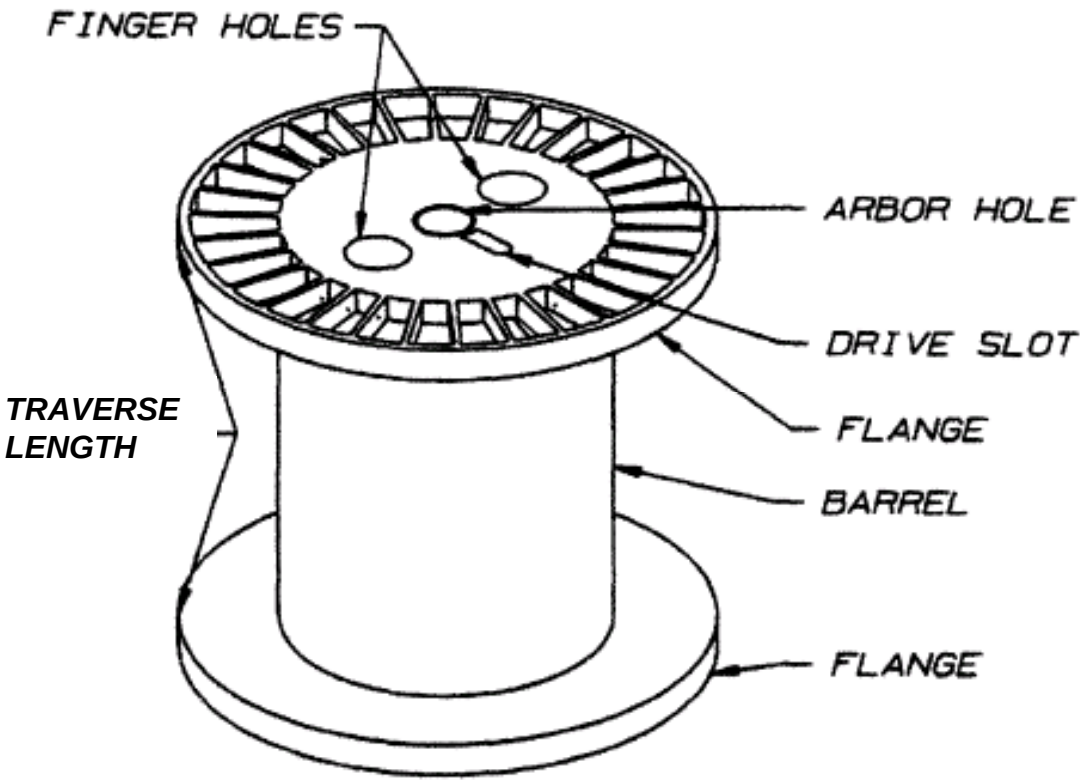

Figure B-1
PARTS AND FEATURES OF TYPICAL MAGNET WIRE SPOOLS/REELS

flange wobble: A condition where the flange, when rotated fails to track in a true plane, which is at the appropriate angle (90 or 45 degrees) to the arbor shaft axis.

flash: Excessive material projections that protrude at mold parting lines.

inside flange face: The surface at the flange adjacent to the barrel surface.

inside flange radius: The radius located at the junction of the inside flange surface and the barrel.

inspection slots: Slots in the flange that leave a portion of the winding exposed, in order to provide a means for visual inspection of the winding.

outside flange radius: The radius of the flange edge and the outside flange face.

reel: A cylindrical device with a top and bottom flange having diameter of 8 inches or larger, that extend beyond the cylinder surface, for the purpose of holding wire for packaging, transportation, and de-reeling.

spool: A spool is defined as having a flange diameter of less than 8 inches.

© Copyright 2005 by the National Electrical Manufacturers Association.

Copyright National Electrical Manufacturers Association
Provided by IHS under license with NEMA
No reproduction or networking permitted without license from IHS
Not for Resale

start ribs: Indentations and molded protrusions in the barrel of a spool/reel, which serve as a gripping surface for wire on the initial layer of the winding.

sink: A depression in the molded surface resulting from the cooling process of the plastic. It generally does not affect the strength of the item.

tare weight: The weight of the empty spool/reel, with no wire applied.

tie-off holes: Holes at the junction of the barrel and flange, or on the outside edge of the flange, which serves as a means to tie off the start or end of the reel of wire.

traverse length: The distance between the flanges parallel to the barrel (Figure B-1).

B.2 REQUIREMENTS FOR SPOOLS AND REELS

B.2.1 Material

All spools/reels shall be fabricated of plastic material specified by the magnet wire producer. Glued spools/reels shall be of a single material type.

B.2.2 Marking

Spools/reels shall be permanently marked in a visible location. The spool/reel shall carry a marking denoting the country of origin and type of plastic. Spools/reels made of multiple types of plastic shall have their individual parts marked.

B.2.3 General Features

All spools/reels shall provide a means for lifting as well as include a method for driving by means of a pin through the spool/reel flange, or by another suitable means agreed upon between the magnet wire producer and the spool/reel supplier.

B.2.4 Physical Appearance

B.2.4.1 Flanges

Flanges shall be smooth and free from all material flash that are likely to interfere with over-the-flange de-reeling or cause wire damage.

B.2.4.2 Flash

Flash shall be kept to a minimum in the arbor hole in order facilitate spool/reel removal on oven and rewind take-ups.

B.2.4.3 Flange Wobble

Flange wobble shall not exceed the following total indicator readings (TIR), when tested in accordance with B.5.1.3:

Spools	**TIR**
Equal to or less than 3 inches (76.2 mm)	0.005-inch (0.13 mm)
Greater than 3-inches (76.2 mm)	0.010-inch (0.25 mm)
Reels	
8-inch (203 mm) and greater to less than 11-inch (279 mm)	0.015-inch (0.38 mm)
11-inch (279 mm) and greater to less than 23-inch (584 mm)	0.020-inch (0.51 mm)
Greater than 23-inch (584 mm)	as specified by wire producer

© Copyright 2005 by the National Electrical Manufacturers Association.

Copyright National Electrical Manufacturers Association
Provided by IHS under license with NEMA
No reproduction or networking permitted without license from IHS
Not for Resale

B.2.4.4 Flange Diameter and Inner Flange Surface

Flange diameter and inner flange surfaces, and the related radius between these two surfaces shall be free of nicks, scratches, burrs, solvent splash, or solvent runs which will or likely to interfere with wire de-reeling and automatic winding.

B.2.4.5 Barrel

B.2.4.5.1 The barrel of the spool within its winding areas shall be smooth in order to prevent damage to magnet wire. The barrel, of tapered barrel reels, shall permit within its winding area, a surface and /or ribs to prevent pull-down.

B.2.4.5.2 Solvent/adhesive runs along the barrel shall not raise or depress the as-molded surface of the barrel by more than 0.002 inch (0.05 mm).

B.2.4.5.3 Barrel concentricity shall not exceed the following total indicator readings (TIR), when tested in accordance with B.5.1.2.

Straight Flange	**TIR**
6 inches (152 mm) or less	0.010 (0.25 mm)
6 (152 mm) to less than 8 inches (203 mm)	0.015 (0.38 mm)
8 (203 mm) to less than 12 inches (305 mm)	0.020 (0.51 mm)
12 inches (305 mm) and greater	0.025 (0.63 mm)
Tapered Flange	
Less than 8 inches (203 mm)	0.015 (0.38 mm)
8 inches (203 mm) to less than or equal to 12 inches (305 mm)	0.020 (0.51 mm)
Greater than 12 inches (305 mm)	0.025 (0.63 mm)

B.2.4.6 Solvent/Adhesive Weld Length

The solvent/adhesive weld length shall be such that it shows signs that at least 90 percent of the bond area has been covered and solvent applied

B.2.4.7 Butt Surface and Bond Line

There shall be no gap between the butt surfaces and the bond line. The line at this butt area shall not exceed an outward extension of 0.002 inch (0.05 mm) or recess of 0.002 inch (0.05 mm) for spools, or 0.005 inch (0.13 mm) and 0.002 inch (0.05 mm) respectively for reel

B.2.4.8 Sinks

Sinks in the winding area shall be kept to a minimum and shall not be greater than 0.010 inch (0.25 mm) deep for 3 inch (76 mm) and larger spools, except that 3 inch (76 mm) and smaller spools used for 44.5 AWG and finer wire applications shall be a maximum of 0.005 inch (0.13 mm). The 60-degree cone area shall not have sinks, which affect barrel concentricity or flange run-out. Sinks in the non-winding area shall be acceptable as long as other properties of the spool are in compliance of specified limits.

B.2.4.9 Appearance and Color

Appearance and color of spools/reels shall be as specified by the magnet wire producer.

B.2.4.10 Reel Size

Reel sizes are defined nominally in Table B-3 as:

Top Flange/Bottom Flange X Traverse Length

© Copyright 2005 by the National Electrical Manufacturers Association.

Copyright National Electrical Manufacturers Association
Provided by IHS under license with NEMA
No reproduction or networking permitted without license from IHS
Not for Resale

B.2.4.11 Straight Flange

B.2.4.11.1 Non-tapered Barrel

Typical dimensions and tolerances for standard non-tapered barrel spools/reels are in accordance with Tables B-1, B-2, and B-4 and Figures B-2, and B-4.

NOTE–Information contained in Figures B-2 and B-4, and Table B-2 is adopted from IEC 60264-2-1, and shall be considered Authorized Engineering Information.

B.2.4.11.2 Tapered Barrel

Typical dimensions for tapered barrel reels shown in Figure B-4 are as indicated in Table B-3.

B.2.4.12 Tapered Flange

Typical dimensions and tolerances for available tapered flange barrel spools/reels as indicated in Tables B-4, B-5 and B-6 are shown in Figures B-5, B-6 and B-7.

B.2.4.13 Strength

Spool/reel strength shall be determined in accordance with B.3.2. Performance requirements shall be based upon agreement reached between individual spool/reel supplier and the magnet wire producer.

© Copyright 2005 by the National Electrical Manufacturers Association.

Copyright National Electrical Manufacturers Association
Provided by IHS under license with NEMA
No reproduction or networking permitted without license from IHS
Not for Resale

Table B-1
DIMENSIONS AND TOLERANCES FOR STRAIGHT BARREL SPOOL/REELS
(Dimensions in inches)

Standard Nomenclature	Nominal Weight Copper (lbs.)	Nominal Tare Weight (lbs.)	Flange Diameter	Flange Thickness	Traverse Length	Nominal Overall Length	Barrel Diameter	Bore Diameter
2 or 2-1/2	0.75	0.15	2.5 ±0.01	0.184 ±0.01	3.00 ±0.01	3.38	1.75 ±0.01	0.629 +0.010, -0.000
3	2	0.17	3.00 ±0.010	0.25 ±0.01	3.48 ±0.01	4	1.75 ±0.01	0.629 +0.010, -0.000
5	6	0.38	4.88 ±0.02	0.25 ±0.01	3.50 ±0.01	4	3.00 ±0.01	0.629 +0.010, -0.000
5WF	6	0.46	5.00 ±0.02	0.31 ±0.01	3.50 ±0.01	4.13	3.00 ±0.02	0.629 +0.010, -0.000
6IF	9	0.6	6.00 ±0.02	0.31 ±0.01	3.50 ±0.01	4.13	3.50 ±0.02	0.629 +0.010, -0.000
6WF	9	0.67	6.00 ±0.02	0.41 ±0.01	3.50 ±0.01	4.32	3.50 ±0.02	0.629 +0.010, -0.000
6TF	9	0.48	6.00 ±0.02	0.25 ±0.01	3.50 ±0.01	4	3.50 ±0.02	0.629 +0.010, -0.000
6 X 6	14	1.03	6.00 ±0.02	0.50 ±0.01	6.00 ±0.01	7	3.75 ±0.02	0.629 +0.010, -0.000
8 X 6	25	1.43	8.00 ±0.03	0.68 ±0.01	6.00 ±0.01	7.38	4.63 ±0.02	**
12	75	2.92	11.75 ±0.03	0.65 ±0.02	7.00 ±0.01	8.25	6.56 ±0.03	**
24	250	16.9	24.00 ±0.04	1.38 ±0.01	6.00 ±0.02	8.75	14.00 ±0.03	**

(Dimensions in mm)

Standard Nomenclature	Nominal Weight Copper (kg)	Nominal Tare Weight (kg)	Flange Diameter	Flange Thickness	Traverse Length	Nominal Overall Length	Barrel Diameter	Bore Diameter
2 or 2-1/2	0.3	0.1	63.5 ± 0.3	4.7 ± 0.3	76.2 ± 0.3	85.9	44.5 ± 0.3	16.0 + 0.3 - 0.0
3	0.9	0.1	76.2 ± 0.3	6.4 ± 0.3	88.4 ± 0.3	101.6	44.5 ± 0.3	16.0 + 0.3 - 0.0
5	2.7	0.2	124.0 ± 0.5	6.4 ± 0.3	88.9 ± 0.3	101.6	76.2 ± 0.3	16.0 + 0.3 - 0.0
5WF	2.7	0.2	127.0 ± 0.5	7.9 ± 0.3	88.9 ± 0.3	104.9	76.2 ± 0.5	16.0 + 0.3 - 0.0
6IF	4.1	0.3	152.4 ± 0.5	7.9 ± 0.3	88.9 ± 0.3	104.9	88.9 ± 0.5	16.0 + 0.3 - 0.0
6WF	4.1	0.3	152.4 ± 0.5	10.4 ± 0.3	88.9 ± 0.3	109.7	88.9 ± 0.5	16.0 + 0.3 - 0.0
6TF	4.1	0.2	152.4 ± 0.5	6.4 ± 0.3	88.9 ± 0.3	101.6	88.9 ± 0.5	16.0 + 0.3 - 0.0
6 X 6	6.4	0.5	152.4 ± 0.5	12.7 ± 0.3	152.4 ± 0.3	177.8	95.3 ± 0.5	16.0 + 0.3 - 0.0
8 X 6	11.3	0.6	203.2 ± 0.8	17.3 ± 0.3	152.4 ± 0.3	187.5	117.6 ± 0.5	**
12	34.0	1.3	298.5 ± 0.8	16.5 ± 0.5	177.8 ± 0.3	209.6	166.6 ± 0.8	**
24	113.4	7.7	609.6 ± 1.0	35.1 ± 0.3	152.4 ± 0.5	222.3	355.6 ± 0.8	**

© Copyright 2005 by the National Electrical Manufacturers Association.

Copyright National Electrical Manufacturers Association
Provided by IHS under license with NEMA
No reproduction or networking permitted without license from IHS
Not for Resale

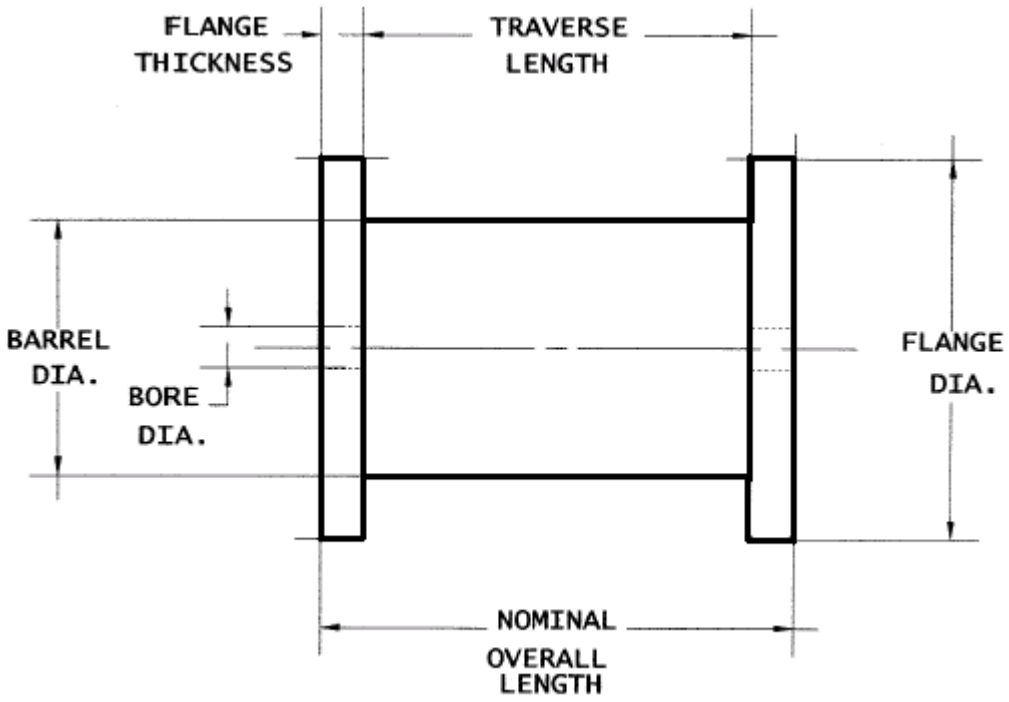

Figure B-2
STRAIGHT BARREL SPOOL/REEL

© Copyright 2005 by the National Electrical Manufacturers Association.

Copyright National Electrical Manufacturers Association
Provided by IHS under license with NEMA
No reproduction or networking permitted without license from IHS
Not for Resale

Table B-2
DIMENSIONS AND TOLERANCES FOR IEC CYLINDRICAL STRAIGHT BARREL SPOOL/REELS
(Dimensions in mm)

Spool Type	Flange Diameter	Barrel Diameter	Bore Diameter	Bore Tolerance	Overall Length	Traverse Length	Traverse Tolerance	Inside Barrel Radius	Outside Flange Radius
40	40	25	11	+0.1, -0.0	50	38	± 0.10	0.4	1.0
50	50	32	11	+0.1, -0.0	50	38	± 0.15	0.4	1.0
63	63	40	11	+0.1, -0.0	63	49	± 0.15	0.4	1.6
80	80	50	16	+0.2, -0.0	80	64	± 0.15	0.6	2.0
100	100	63	16	+0.2, -0.0	100	80	± 0.20	0.6	3.0
125	125	80	16	+0.2, -0.0	125	100	± 0.20	0.6	3.0
160	160	100	22	+0.2, -0.0	160	128	± 0.20	0.6	3.0
200	200	125	22	+0.2, -0.0	200	160	± 0.30	0.6	4.0
250	250	160	22	+0.2, -0.0	200	160	± 0.40	1.0	5.0
355	355	224	36	+0.5, -0.0	200	160	± 0.40	1.2	5.0
500	500	315	36	+0.5, -0.0	250	180	± 0.50	1.6	5.0
710	710	500	51	+0.5, -0.0	250	180	± 0.80	2.0	6.0
1000	1000	800	51	+0.5, -0.0	250	180	± 1.00	3.0	6.0

(Dimensions in inches)

Spool Type	Flange Diameter	Barrel Diameter	Bore Diameter	Bore Tolerance	Overall Length	Traverse Length	Traverse Tolerance	Inside Barrel Radius	Outside Flange Radius
40	1.6	1.0	0.4	+0.04, -0.0	2.0	1.5	± 0.004	0.02	0.04
50	2.0	1.3	0.4	+0.04, -0.0	2.0	1.5	± 0.006	0.02	0.04
63	2.5	1.6	0.4	+0.04, -0.0	2.5	1.9	± 0.006	0.02	0.06
80	3.1	2.0	0.6	+0.08, -0.0	3.1	2.5	± 0.006	0.02	0.08
100	3.9	2.5	0.6	+0.08, -0.0	3.9	3.1	± 0.008	0.02	0.12
125	4.9	3.1	0.6	+0.08, -0.0	4.9	3.9	± 0.008	0.02	0.12
160	6.3	3.9	0.9	+0.08, -0.0	6.3	5.0	± 0.008	0.02	0.12
200	7.9	4.9	0.9	+0.08, -0.0	7.9	6.3	± 0.01	0.02	0.16
250	9.8	6.3	0.9	+0.08, -0.0	7.9	6.3	± 0.02	0.04	0.20
355	14.0	8.8	1.4	+0.20, -0.0	7.9	6.3	± 0.02	0.05	0.20
500	19.7	12.4	1.4	+0.20, -0.0	9.8	7.1	± 0.02	0.06	0.20
710	28.0	19.7	2.0	+0.20, -0.0	9.8	7.1	± 0.03	0.08	0.24
1000	39.4	31.5	2.0	+0.20, -0.0	9.8	7.1	± 0.04	0.12	0.24

--`,,```,,,,````-`-`,,`,,`,`,,`---
© Copyright 2005 by the National Electrical Manufacturers Association.

Copyright National Electrical Manufacturers Association
Provided by IHS under license with NEMA
No reproduction or networking permitted without license from IHS
Not for Resale

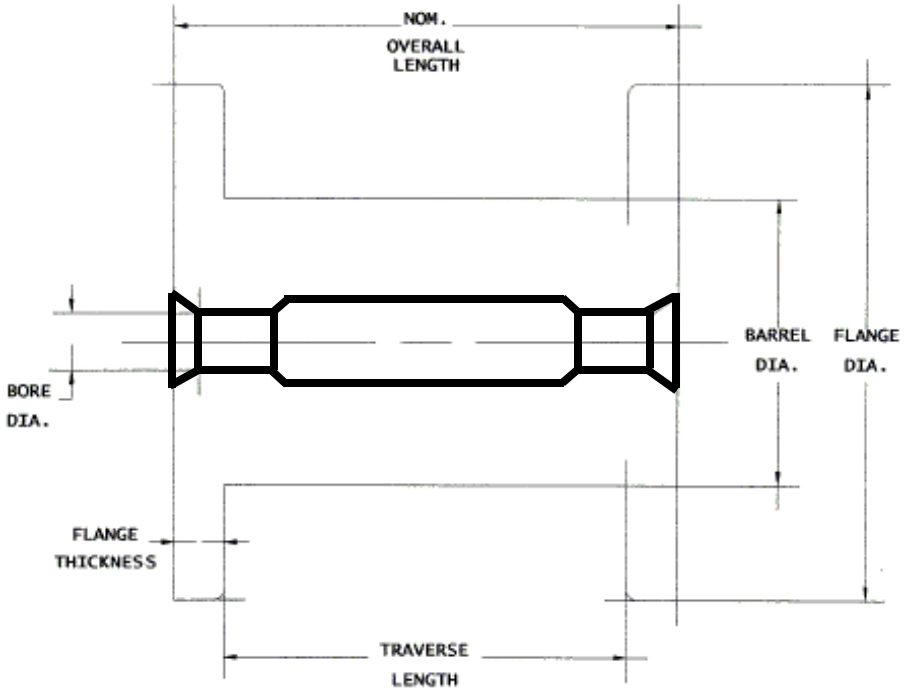

Figure B-3
IEC CYLINDRICAL BARRELED DELIVERY SPOOLS

© Copyright 2005 by the National Electrical Manufacturers Association.

Copyright National Electrical Manufacturers Association
Provided by IHS under license with NEMA
No reproduction or networking permitted without license from IHS
Not for Resale

Table B-3
DIMENSIONS AND TOLERANCES FOR TAPERED BARREL, STRAIGHT FLANGE SPOOL/REELS
(Dimensions in inches)

Standard Nomenclature	Nominal Copper Weight	Reel Size	Top Flange Diameter	Bottom Flange Diameter	Traverse Length	Bottom Flange Thickness	Nominal Overall Length	Barrel Top Diameter	Barrel Bottom Diameter
50	40 lbs.	8.5/9.25x9	8.5 ± 0.02	9.25 ± 0.02	9.00 ± 0.01	0.53 ± 0.01	10.06	5.75 ± 0.02	6.50 ± 0.02
100	85 lbs.	10/11x12	10.0 ± 0.02	11.0 ± 0.02	12.01 ± 0.01	0.69 ± 0.01	13.38	6.05 ± 0.02	7.00 ± 0.01
250	275 lbs.	15/16x12	15.00 ± 0.04	16.00 ± 0.04	11.96± 0.02	1.25 ± 0.01	14.50	8.00 ± 0.02	9.00 ± 0.02
500	550 lbs.	15/16x24	15.00± 0.04	16.00 ± 0.04	23.86 ± 0.02	1.19 ± 0.01	26.38	7.96 ± 0.02	9.00 ± 0.02
550	525 lbs.	16.5/19.5x18	16.5 ± 0.04	19.5 ± 0.04	17.96 ± 0.02	1.19 ± 0.01	20.25	7.96 ± 0.02	9.26 ± 0.02
650	650 lbs.	16.5/19.5x18.5	16.5 ± 0.04	19.5 ± 0.04	18.39 ± 0.02	1.19 ± 0.01	20.75	7.96 ± 0.02	9.00 ± 0.02
750	750 lbs.	16.5/19/.5x24	16.5 ± 0.04	19.5 ± 0.04	23.86 ± 0.02	1.19 ± 0.01	26.19	7.96 ± 0.02	9.00 ± 0.02
1000	925 lbs.	16.5/19.5x30	16.5 ± 0.04	19.5 ± 0.04	29.86 ± 0.02	1.19 ± 0.01	32.19	7.96 ± 0.02	9.26 ± 0.02

NOTE–Bore diameter or arbor hole size shall be as specified by the magnet wire producer.

(Dimensions in mm)

Standard Nomenclature	Nominal Copper Weight	Reel Size	Top Flange Diameter	Bottom Flange Diameter	Traverse Length	Bottom Flange Thickness	Nominal Overall Length	Barrel Top Diameter	Barrel Bottom Diameter
50	18.1 kg	216/235x229	216 ± 0.5	235 ± 0.5	229 ± 0.3	0.53 ± 0.3	256	146 ± 0.5	165 ± 0.5
100	38.6 kg	254/279x305	254 ± 0.5	279 ± 0.5	305 ± 0.3	0.69 ± 0.3	340	154 ± 0.5	178 ± 0.3
250	124.7 kg	381/406x305	381 ± 1.0	406 ± 1.0	304 ± 0.5	1.25 ± 0.3	368	203 ± 0.5	229 ± 0.5
500	249.5 kg	381/406x609	381 ± 1.0	406 ± 1.0	606 ± 0.5	1.19 ± 0.3	670	202 ± 0.5	229 ± 0.5
550	238.1 kg	419/495x457	419 ± 1.0	495 ± 1.0	456± 0.5	1.19 ± 0.3	514	202 ± 0.5	235 ± 0.5
650	294.8 kg	419/495x470	419 ± 1.0	495 ± 1.0	467 ± 0.5	1.19 ± 0.3	514	202 ± 0.5	229 ± 0.5
750	340.2 kg	419/495x609	419 ± 1.0	495 ± 1.0	606 ± 0.5	1.19 ± 0.3	665	202 ± 0.5	229 ± 0.5
1000	419.6 kg	419/495x762	419 ± 1.0	495 ± 1.0	758 ± 0.5	1.19 ± 0.3	818	202 ± 0.5	235 ± 0.5

NOTE–Bore diameter or arbor hole size shall be as specified by the magnet wire producer.

© Copyright 2005 by the National Electrical Manufacturers Association.

Copyright National Electrical Manufacturers Association
Provided by IHS under license with NEMA
No reproduction or networking permitted without license from IHS
Not for Resale

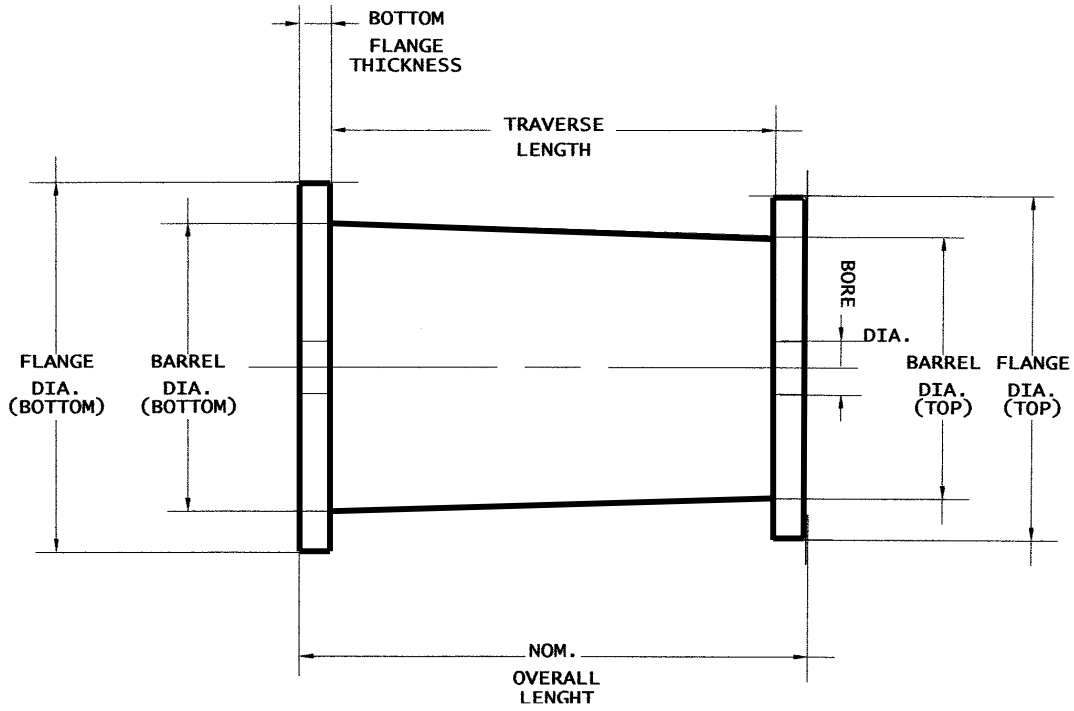

Figure B-4
TAPER BARREL SPOOL/REEL

© Copyright 2005 by the National Electrical Manufacturers Association.

Copyright National Electrical Manufacturers Association
Provided by IHS under license with NEMA
No reproduction or networking permitted without license from IHS
Not for Resale

Table B-4
DIMENSIONS FOR DOUBLE TAPERED FLANGE/STRAIGHT BARREL SPOOLS/REELS
(Dimensions in mm)

Spool/Reel Type	Outside Flange Diameter	Barrel Diameter	Bore Diameter	Angle of Flange	Overall Length	Barrel Length
DIN-100/45	100	56	16	45	100	49
DIN-125/45	125	71	16	45	125	65
DIN-160/45	160	90	22	45	160	85
DIN-200/45	200	112	22	45	200	106
DIN-250/45	250	140	22	45	250	133

(Dimensions in inches)

Spool/Reel Type	Outside Flange Diameter	Barrel Diameter	Bore Diameter	Angle of Flange	Overall Length	Barrel Length
DIN-100/45	3.94	2.20	0.630	45	3.94	1.93
DIN-125/45	4.92	2.80	0.630	45	4.92	2.56
DIN-160/45	6.30	3.54	0.866	45	6.30	3.35
DIN-200/45	7.87	4.41	0.866	45	7.87	4.17
DIN-250/45	9.84	5.51	0.866	45	9.84	5.24

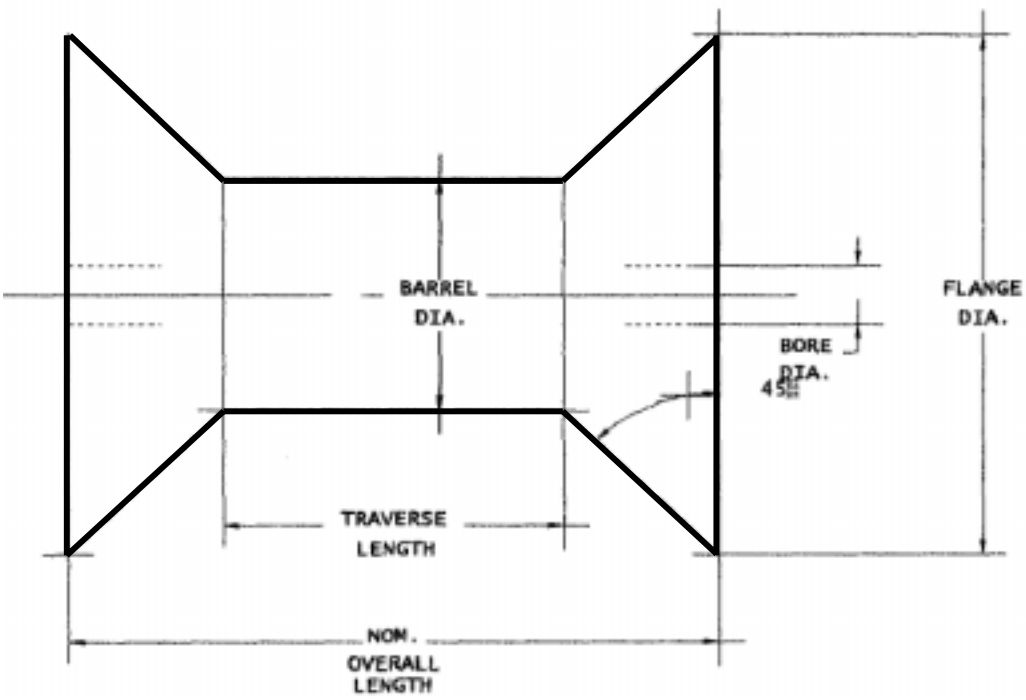

Figure B-5
DOUBLE TAPERED FLANGE, STRAIGHT BARREL SPOOL

© Copyright 2005 by the National Electrical Manufacturers Association.

Copyright National Electrical Manufacturers Association
Provided by IHS under license with NEMA
No reproduction or networking permitted without license from IHS
Not for Resale

Table B-5
DIMENSIONS FOR TAPERED BARREL REELS WITH DOUBLE TAPERED FLANGES

(Dimensions in inches)

Standard Nomenclature	Nominal Copper Weight	Top Flange Diameter	Bottom Flange Diameter	Bottom Flange Thickness	Nominal Overall Length	Barrel Top Diameter	Barrel Bottom Diameter	Nominal Overall Length	Traverse Length	Bore Diameter
TF80	80 lbs.	10.0 ± 0.03	10.03 ± 0.03	0.44 ± 0.02	10.06	6.00 ± 0.02	6.80 ± 0.02	12.63	8.23	1.53+.010,-0.000
TF600	600 lbs.	17.8 ± 0.02	19.36 ± 0.02	NA ± NA	13.38	7.96 ± 0.02	9.00 ± 0.02	22.79	12.00	NA
TF1000	1000 lbs.	17.8 ± 0.02	19.36 ± 0.02	NA ± NA	14.50	7.96 ± 0.02	9.00 ± 0.02	29.18	18.19	NA

NOTE–Bore diameter or arbor hole size shall be as specified by the magnet wire producer.

(Dimensions in mm)

Standard Nomenclature	Nominal Copper Weight	Top Flange Diameter	Bottom Flange Diameter	Bottom Flange Thickness	Nominal Overall Length	Barrel Top Diameter	Barrel Bottom Diameter	Nominal Overall Length	Traverse Length	Bore Diameter
TF80	36.3 kg	254.8 ± 0.8	254.8 ± 0.8	11.2 ± 0.5	255.5	152.4 ± 0.5	172.7 ± 0.5	320.8	209.0	38.9+0.3,-0.0
TF600	272.2 kg	452.4 ± 0.5	491.7 ± 0.5	NA	339.9	202.2 ± 0.5	228.6 ± 0.5	578.9	304.8	NA
TF1000	453.6 kg	452.4 ± 0.5	491.7 ± 0.5	NA	368.3	202.2 ± 0.5	228.6 ± 0.5	741.2	462.0	NA

NOTE–Bore diameter or arbor hole size shall be as specified by the magnet wire producer.

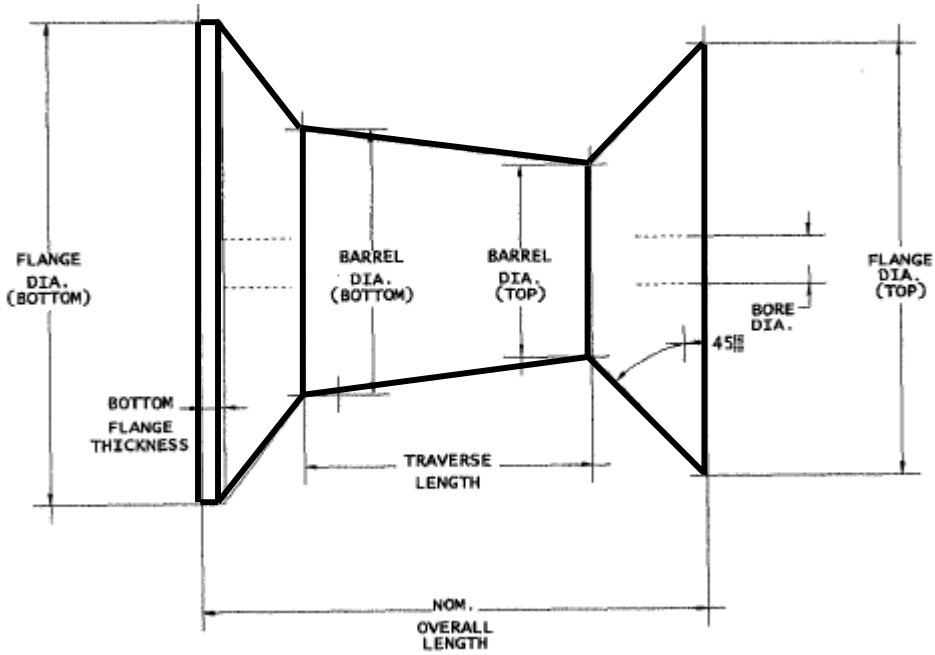

Figure B-6
DOUBLE TAPERED FLANGE, TAPERED BARREL SPOOL/REEL

© Copyright 2005 by the National Electrical Manufacturers Association.

Copyright National Electrical Manufacturers Association
Provided by IHS under license with NEMA
No reproduction or networking permitted without license from IHS
Not for Resale

Table B-6
DIMENSIONS AND TOLERANCES FOR SINGLE TAPERED FLANGE TAPERED BARREL REELS
(Dimensions in inches)

Standard Nomenclature	Nominal Copper Weight	Top Flange Diameter	Bottom Flange Diameter	Top Flange Edge Radius	Bottom Flange Thickness	Overall Length	Barrel Length	Top Barrel Diameter	Bottom Barrel Diameter	Bore Diameter
85#	85 lbs.	10.00 ± 0.02	11.00 ± 0.02	0.25	0.63 ± 0.01	0.69 ± 0.01	8.00	5.50	6.05 ± 0.02	1.281 ± 0.010
325#	325lbs.	18.95 ± 0.01	20.00 ± 0.02	0.50	1.50 ± 0.02	13.32	6.36	9.02 ± 0.02	9.93 ± 0.02	1.531 ± 0.015
650#	650lbs.	19.99 ± 0.02	20.00 ± 0.02	0.50	1.50 ± 0.02	21.00	13.80	9.02 ± 0.02	9.95 ± 0.02	1.531 ± 0.015
990#	821 lbs.	17.75 ± 0.01	19.5 ± 0.01	NA	1.18 ± 0.01	30.35	23.71	7.75± 0.05	9.00 ± 0.05	1.536 ± 0.015
1000#	925lbs.	19.05 ± 0.01	20.00 ± 0.02	0.50	1.50 ± 0.02	26.37	19.15	9.02 ± 0.02	9.95 ± 0.02	NA

NOTE–Bore diameter or arbor hole size shall be as specified by the magnet wire producer.

(Dimensions in mm)

Standard Nomenclature	Nominal Copper Weight	Top Flange Diameter	Bottom Flange Diameter	Top Flange Edge Radius	Bottom Flange Thickness	Overall Length	Barrel Length	Top Barrel Diameter	Bottom Barrel Diameter	Bore Diameter
85#	38.6 kg	254.0 ± 0.5	279.4 ± 0.5	6.4	16.0 ± 0.3	271.5±0.3	203.2	139.7	153.7 ± 0.5	32.5 ± 0.3
325#	147.4 kg	481.3 ± 0.3	508.0 ± 0.5	12.7	38.1 ± 0.5	338.3	161.5	229.1 ± 0.5	252.2 ± 0.5	38.9 ± 0.4
650#	294.8 kg	507.7 ± 0.5	508.0 ± 0.5	12.7	38.1 ± 0.5	533.4	350.5	229.1 ± 0.5	252.7 ± 0.5	38.9 ± 0.4
990#	372.4 kg	450.9 ± 0.3	495.3 ± 0.3	NA	30.0 ± 0.3	770.9	602.2	196.9 ± 1.3	228.6 ± 1.3	39.0 ± 0.4
1000#	419.6 kg	483.9 ± 0.3	508.0 ± 0.5	12.7	38.1 ± 0.5	669.8	486.4	229.1 ± 0.5	252.7 ± 0.5	NA

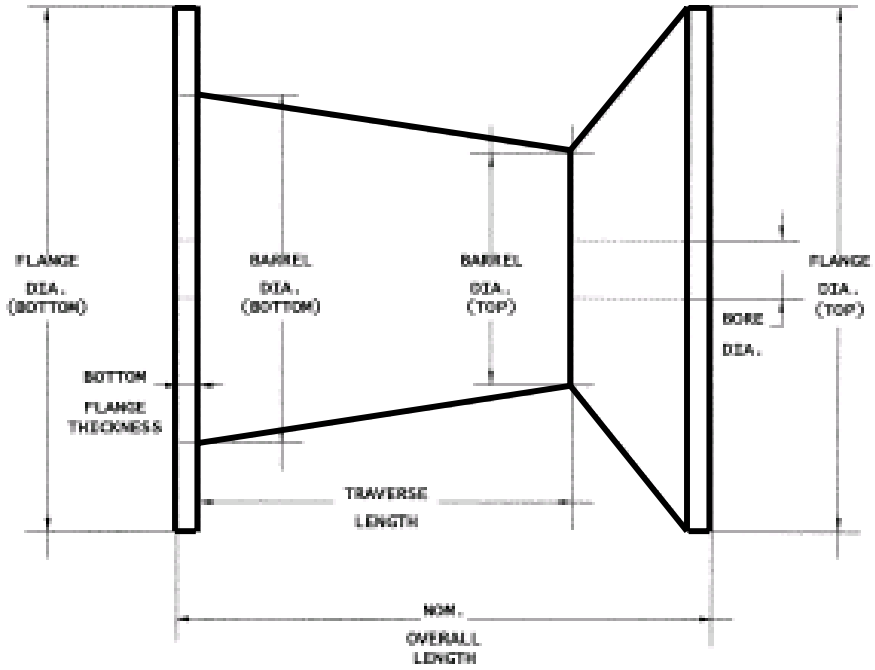

Figure B-7
SINGLE TAPERED FLANGE, TAPERED BARREL

© Copyright 2005 by the National Electrical Manufacturers Association.

Copyright National Electrical Manufacturers Association
Provided by IHS under license with NEMA
No reproduction or networking permitted without license from IHS
Not for Resale

B.3 TEST METHODS

B.3.1 DIMENSIONAL MEASUREMENTS

Measurement methods used by spool/reel manufacturers shall be reproducible.

B.3.1.1 Flange thickness

For measuring flange thickness, the spool/reel shall be placed on a surface plate in a vertical position. The flange thickness measurement shall be taken 0.25 inch (6.4 mm) from the barrel, by suitable equipment capable of measurements to within 0.001 inch (0.03 mm).

B.3.1.2 Barrel Concentricity

With the exception of the 1000-pound reels, barrel concentricity shall be measured by engaging the 60-degree countersink of the arbor holes with a 60-degree conical center. The pick-up point of a calibrated measuring device shall rest on the barrel, approximately 0.125 inch (3.2 mm) away from the flange. The spool/reel shall be rotated using “live” conical centers.

Barrel concentricity shall not exceed the total indicator reading (TIR) specified in B.2.4.5.3.

B.3.1.3 Flange Wobble

Flange wobble shall be measured using the holding apparatus described in B.3.1.2. The pick-up point of the calibrated measuring device shall track on the traverse side of the flange 0.25 inch (6.4 mm) down from the flange outer diameter.

B.3.1.4 Barrel Diameter

Barrel diameter on all 2-piece spools shall be measured 0.0625 inch (1.6 mm) from either side of the bond line, allowing for 0.004-inch (0.10 mm) bond built to be added to the diameter of the barrel.

B.3.1.5 Straight Flange Spools/Reels

B.3.1.5.1 Flange Angle

The flange angle shall not exceed 90 degrees, nor be less than 89 degrees 30 minutes. The total accumulation in traverse reduction (flange toe-in) at the outer edge of the flange (measured 0.125 inch inward from the maximum flange diameter) shall not exceed 0.020 inch (0.5 mm) for spools.

B.3.1.5.2 Traverse Length

Traverse length shall be the distance measured flange-to-flange, 0.125 inch (3.2 mm) out from the maximum barrel dimension, parallel to the centerline of the arbor holes.

B.3.2 STRENGTH

B.3.2.1 Principle of Test

This test method applies only to spools/reels for magnet wire products. It provides guidelines for the testing of 10/11x12 or smaller straight or tapered barrel spools and reels, and is to be used in conjunction with all other testing procedures for magnet wire spools and reels.

Safety Statement: Mechanical Hazard - Some tests using mechanical equipment may expose the operator to mechanical hazards. Care must be exercised to protect eyes, fingers, hands, and other body parts from injury.

© Copyright 2005 by the National Electrical Manufacturers Association.

Copyright National Electrical Manufacturers Association
Provided by IHS under license with NEMA
No reproduction or networking permitted without license from IHS
Not for Resale

B.3.2.2 Preparation of Test Specimens

Flange and barrel strengths shall be determined by using a tensile test machine having a minimum capacity of 10,000 lbs. and the capability of measuring jaw speed in inches per second. The spool shall be held in a set of pulling jaws as shown in Figure B-8. The test fixture or jaws shall have a rate of jaw travel of 1 ± 0.25 inch per second.

Tests shall be made at room temperature 72–79ºF (22–26ºC). Spools or reels for test shall be held at the test temperature for at least 24 hours prior to testing. Spools or reels that are solvent bonded shall not be tested prior to 7 days after assembly.

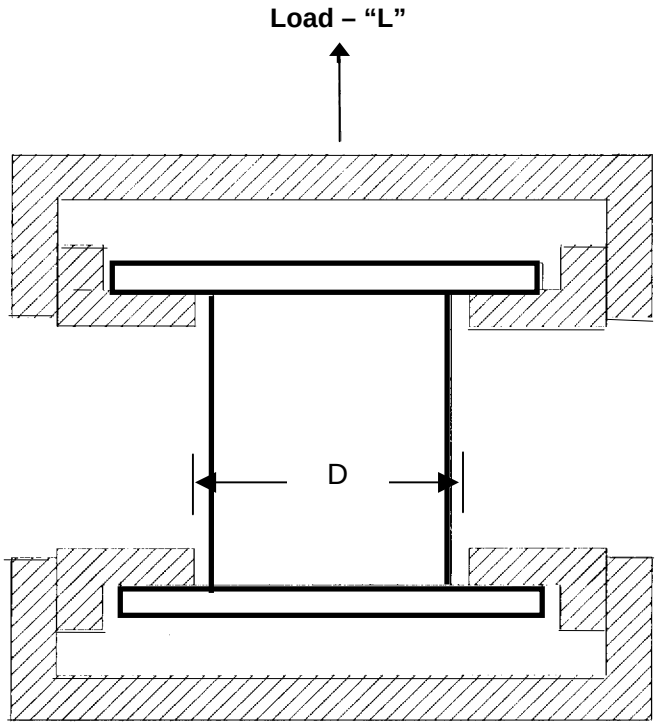

Figure B-8
PREPARATION OF SAMPLE FOR STRENGTH TEST

B.3.2.3 Straight Flange Spools/Reel

B.3.2.3.1 Methods

Method A – Flange Test

The load "L" is applied to the flanges by a semi-circular fixture with an inside diameter "D" equal to the spool or reel barrel diameter plus 1.5 times the flange overhang, less 1/4 (6.4 mm) inch. The jaws should be designed to allow the flange to slide during testing, and should not contact the flange inside the specified diameter.

Method B – Barrel Test

The load "L" is applied to the flanges by a semi-circular ring fixture, positioned equidistant around the center of the barrel. The inside diameter of the ring "D" shall be equal to the spool or reel barrel diameter plus 1/4 inch (6.4 mm). The jaws should be designed to allow the flanges to slide during the test.

© Copyright 2005 by the National Electrical Manufacturers Association.

Copyright National Electrical Manufacturers Association
Provided by IHS under license with NEMA
No reproduction or networking permitted without license from IHS
Not for Resale

B.3.2.3.2 Evaluation

Minimum or range of performance values shall be determined by mutual agreement between the supplier and the wire producer.

B.3.2.4 Tapered Flange Spools/Reels

B.3.2.4.1 Method

For testing of tapered top tapered barrel spools and reels, a fixture similar to the one used for straight flange and barrel reels is used. The load is applied to the flanges at a diameter equal to the spool or reel barrel diameter plus 1/8 inch (3.2 mm) on the radius. For example, if the diameter at the barrel is 5 inches, (127 mm) the opening in the fixture shall be 5-1/4 inches (133 mm). With a tapered barrel the fixture openings at the top and bottom will be of different diameters. The opening at the top shall be cut at a 45-degree angle or an angle to match the angle of the top flange. Where spools or reels have double taper of both flanges, the bottom of the fixture shall be designed in the same manner as the plate or ring holding the top flange.

The load shall be applied by means of the semi-circular ring fixture. The jaws should be designed to allow the flange to slide during the test and should not contact the flange inside the diameter specified above.

B.3.2.4.2 Evaluation

The value from the testing and the minimum or range for the spool/reel performance shall be determined by mutual agreement between the supplier and the wire producer.

B.3.3 CHEMICAL COMPATABILITY

B.3.3.1 Principle of Test

As magnet wire is wound on plastic spools or reels, the plastic spool or reel comes in contact with chemicals used to treat the wire such as lubricants, cleaners, coatings etc. Some of these chemicals may not be compatible with the plastic used in the construction of the reel and may adversely affect the performance of the plastic reel. Cracks may develop in the reel, which can trap or break the wire during the de-reeling process, or the reel may break.

Chemical incompatibility or attack is referred to as an environmental stress cracking (ESC). The degree of ESC present in actual application on spools and reels is directly influenced by the type of plastic resin, by the amount of chemical added to the wire, evaporation rates of the chemical, wire temperature at the point of application of the chemical, winding speed, distance from the point of application to the spool or reel, winding tension, and the amount of time a wound spool or reel is stored before use.

B.3.3.2 Safety Statements

It is not the intent of this document to address all of the safety issues associated with its use. It is the responsibility of the user to train personnel, establish proper health and safety procedures and to be aware of local, state and national regulatory restrictions that may apply.

WARNING: Chemical Hazard–This test shall be performed under controlled conditions that allow for safety and protection of personnel. The chemicals being evaluated may be hazardous. Information and instructions contained in Material Safety Data Sheets (MSDS) for handling, working with, and disposal of hazardous chemicals shall be followed. Furthermore, discharges of these chemicals to the environment must be performed in compliance with current Federal, state and local regulations.

WARNING: Mechanical Hazard–As test specimens are placed in the test fixture under tension, they can break at any time. The sudden release of energy could propel parts of the specimen, the chemical being evaluated, or the fixture itself in a hazardous way or into hazardous circumstances. The hydraulic test

© Copyright 2005 by the National Electrical Manufacturers Association.

Copyright National Electrical Manufacturers Association
Provided by IHS under license with NEMA
No reproduction or networking permitted without license from IHS
Not for Resale

apparatus to be used may also expose the operator to mechanical hazards. Care must be exercised to protect eyes, fingers, hands, and other body parts from injury.

B.3.3.3 Preparation of Test Specimens

Test specimens, referred to as a "dog bone" due to their shape (Figure B-9a), are molded from the same thermoplastic resin used in molding the spool or reel to be evaluated. The dog bone measures 1 inch (25 mm) wide X 5 inches (127 mm) long X 0.110 inch (2.8 mm) thick overall and necks down to 1-3/4 inches (44.5 mm) long and 3/8 (9.5 mm) inch wide X 0.110 inch (2.8 mm) thick, with 0.055 inch (1.4 mm) radius edges in the test section (0.0373 in sq. (24 mm sq.) cross-sectional area) with a 3/8 inch (9.5 mm) diameter mounting hole and bosses 0.150 inch (3.8 mm) high on both sides of the dog bone.

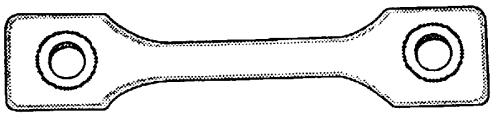

Figure B-9a
DOG BONE

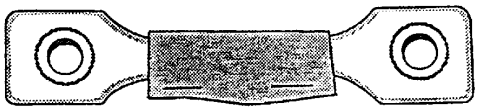

Figure B-9b
DOG BONE WITH PAPER TOWELLING

For each chemical tested, four dog bone specimens are required. Two specimens shall be tested at a tensile load of 2030 p.s.i. (1.43 kg/sq mm) and two tested at 3030 p.s.i. (2.13 kg/sq mm) All four-dog bones will be measured, covered with paper toweling (Figure B-9b), and saturated with the chemical being tested. Two of these will also be wrapped in polyethylene film to slow the evaporation rate (See Table B-7).

Table B-7
PREPARATION OF " DOG BONE" TEST SPECIMENS

Specimen Number	Tensile Load p.s.i.	Tensile Load kg/sq mm	Paper Toweling Only	Paper Toweling and Polyester Film
1	2030	1.43	X	
2	2030	1.43		X
3	3030	2.13	X	
4	3030	2.13		X

B.3.3.4 Evaluation

The four specimens shall be examined every four hours the first day, then daily for up to 21 days to determine if breakage has occurred. The date and time that breaks are found shall be recorded. At the end of seven days, the specimens are measured for elongation and re-saturated with the chemical being tested, unwrapping those specimens wrapped in polyethylene film and re-wrapping them. At the end of 14 days, the previous step is repeated. After 21 days, the specimens are measured for elongation and removed.

B.3.3.5 Performance Requirements

After 21 days, the four dog bone specimens must not break or elongate more than 10% in order for the chemical to be considered compatible with the plastic resin used in molding the specimens. For specimens that do not meet this acceptance standard, the time before failure or percentage of elongation after 21 days is simply a relative measure of the degree of chemical incompatibility.

B.3.3.6 Discussion

This procedure is purposely designed as a severe test in that the amount of chemical used is acknowledged as being significantly greater than that which is used in actual application conditions. It is intentional because

© Copyright 2005 by the National Electrical Manufacturers Association.

Copyright National Electrical Manufacturers Association
Provided by IHS under license with NEMA
No reproduction or networking permitted without license from IHS
Not for Resale

the tensile load applied to the dog bone does not simulate all loads and stresses likely to be applied to the spool or reel by the wire and other variables mentioned in the Introduction, which are not present in this test.

The specimens are tested at two tensile loads because environmental stress cracking is directly influenced by the load stresses present.

B.3.3.7 Test Procedures

Four dog bone specimens shall be molded per Figure B-9a from the same thermoplastic resin used in molding the spool or reel to be evaluated. Double ply paper toweling, 2 inches X 3-3/4 inches (51 mm X 95 mm) long, in to be folded in half lengthwise around the neck of each dog bone, and stapled as close to the edge of the dog bone as possible, one staple beside the other, in accordance with Figure B-9b.

Clean four test fixtures and their clevis pins of all chemicals to which they have been previously exposed (See Figure B-10)

Mount a test fixture on the hydraulic test stand mounting plate using a hex head screw (See Figure B-10)

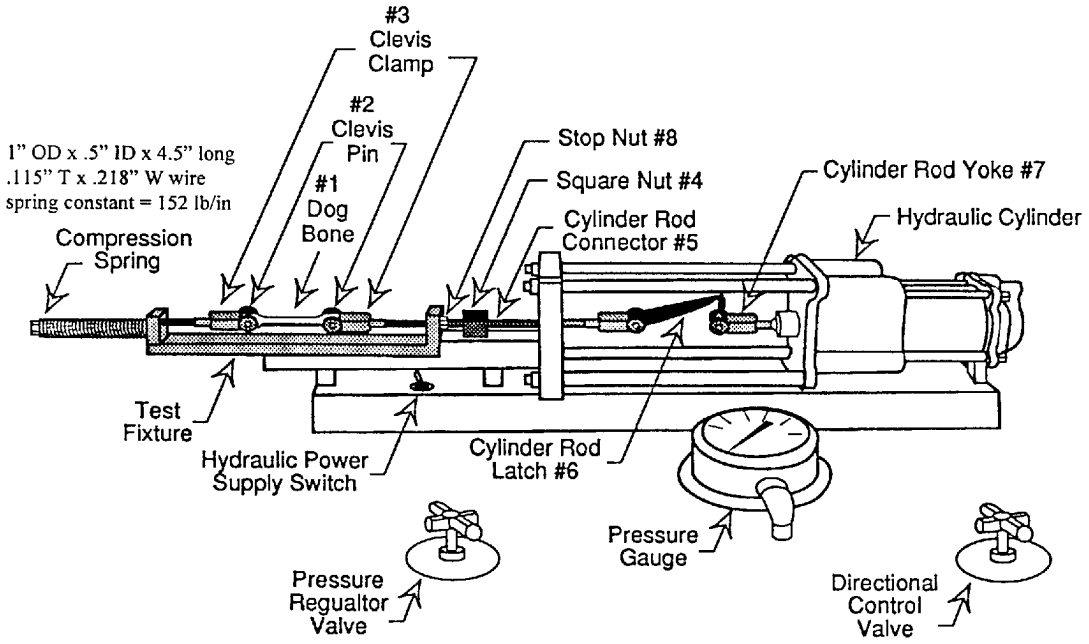

Figure B-10
APPARATUS FOR CHEMICAL COMPATIBILTY TEST

Install a dog bone specimen (with paper toweling) in the test fixture. Loosen the test fixture stop nut (Figure B-10, item 8) to provide sufficient travel to install the dog bone. The ends of the dog bone are to be fitted in the clevis clamp and the clevis pins inserted to hold the dog bone in place. The head end of both clevis pins must be on the same side.

Screw the threaded square nut end of the cylinder rod connector (Figure B-10, item 4) three or four turns in the threaded rod of the test fixture by turning the square nut clockwise.

Turn on the power to the hydraulic power supply and turn the directional control valve to extend the hydraulic cylinder. Pivot the latch (Figure B-10, item 6) of the cylinder rod connector to engage the cylinder rod yoke

© Copyright 2005 by the National Electrical Manufacturers Association.

Copyright National Electrical Manufacturers Association
Provided by IHS under license with NEMA
No reproduction or networking permitted without license from IHS
Not for Resale

(Figure B-10, Item 7) and then reverse the direction of the cylinder to retract the cylinder rod. At the same time, adjust the pressure regulator to the prescribed pressure.

Two samples shall be set at 12 p.s.i (8.43 grams/sq. mm) (the equivalent of 75.4 lbs. (335.5 N) of force on the 0.0373 in sq. (24 sq mm) cross-section of the neck of the dog bone, and 2030 p.s.i. (1.43 kg./sq. mm) tensile load on the dog bone) and two at 18 p.s.i. (12.65 grams/sq. mm) (the equivalent of 113.1 lbs. of force (503.3 N) and 3030 p.s.i. (2.13 kg./sq. mm) tensile load on the dog bone).

When the prescribed pressure is reached, the cylinder will stop moving. Then screw the stop nut (Figure B-10, Item 8) by hand until it contacts the test fixture surface. Do not use a wrench to turn the stop nut, as this will increase the tensile load above the value preset by the hydraulic cylinder. Turn off the hydraulic power supply and unscrew the square nut from the test fixture threaded rod.

The distance between the inserted ends of the clevis pins shall be recorded to three decimal places with a 6-inch dial or digital caliper. Specimens shall be saturated with the chemical agent being tested for compatibility using a clean, unused eyedropper. After saturation, two of the four specimens, as indicated in Table B-7, shall be wrapped with 1-1/2 mil (.038 mm) polyethylene film strip ½ inch wide X 8 inches (12 X 203 mm) long. The polyethylene film strip is applied by holding one end of the strip at the start of the dog bone neck, and tightly wrapping the film strip in a spiral-wound fashion around the paper toweling, progressing toward the opposite end of the dog bone, stopping at the neck and looping the film strip end to prevent unwinding.

Remove the fixture for storage.

Repeat the above procedure to produce four specimens.
1 – 2030 p.s.i. (1.43 kg/sq mm) tensile load- saturated
2 – 2030 p.s.i (1.43 kg/sq mm) tensile load- saturated and wrapped with polyethylene film
3 – 3030 p.s.i. (2.13 kg/sq mm) tensile load- saturated
4 – 3030 p.s.i. (2.13 kg/sq mm) tensile load- saturated and wrapped with polyethylene film

The four specimens shall be examined every four hours during the first day, and daily thereafter for 21 days to determine if breakage has occurred. The date and time that breaks are found shall be recorded. At the end of 7 days, the specimens are measured for elongation and re-saturated with the chemical being tested; unwrapping those wrapped in polyethylene film and rewrapping them. At the end of 14 days, the previous step is repeated. At the end of 21 days, the specimens are measured for elongation and removed.

B.3.4 INSERT PULLOUT STRENGTH

B.3.4.1 Scope

This clause provides two methods for determining the ability of a magnet wire spool/reel insert to withstand a pulling force. The destructive force method determines the breaking point of an insert as a steadily increasing pullout force is applied (See Figure B-11), while the Specified Pullout Force method evaluates the ability of an insert to withstand a specified pulling force (See Figure B-12).

B.3.4.2 Preparation of Test Specimens

Tests shall be made at room temperature 72–79ºF (22–26ºC). Spools or reels for test shall be held at the test temperature for at least 7 days prior to testing. Solvent bonded products shall be held 7 days after assembly to ensure a complete bond before they are tested.

© Copyright 2005 by the National Electrical Manufacturers Association.

Copyright National Electrical Manufacturers Association
Provided by IHS under license with NEMA
No reproduction or networking permitted without license from IHS
Not for Resale

B.3.4.3 Test Method

B.3.4.3.1 Destructive Force Method

Safety Statement: *Mechanical Hazard* - The mechanical equipment used in this test may expose the operator to mechanical hazards. Care must be exercised to protect eyes, fingers, hands, and other body parts from injury.

Adjust a tensile test machine to the desired setting for testing of insert.

Cut approximately two inches (51 mm) off the bottom of three reels

Load the test plates and the insert strain rod fixture, as shown in Figure B-11, and attach the strain rod tee bar onto the movable side of the tensile fixture.

Adjust the tee bar to “0” backlash and reset the dial indicator to zero.

Stretch the assembly to the breaking point, observing the pressure gauge and dial indicators.

Repeat this procedure with thee two additional reels.

B.3.4.3.2 Specified Pullout Force Method

Safety Statement: Mechanical Hazard – Mechanical equipment used in this test may expose the operator to mechanical hazards. Care must be exercised to protect eyes, fingers, hands, and other body parts from injury. Further, the test weight employed in this method should be contained in an enclosure to protect personnel from a sudden release of the weight in case of specimen failure.

Turn the reel to an inverted position so that the insert is facing upward (See Figure B-12).

Affix a weight that is two times the suggested weight-carrying capacity of the reel to the top of the flange. A device that attaches through the bore and canters the load should be utilized.

A similar attachment device is affixed to the bore of the insert. This upper attachment device is connected to a means of lifting the reel and the test weight assembly, which may be mechanical, hydraulic, or pneumatic.

The test is initiated by applying a tensile load sufficient to lift the test weight one inch (25 mm) off the surface on which it is resting. The reel shall remain in tension for two minutes.

B.3.4.4 Evaluation

B.3.4.4.1 Destructive Force Method

The minimum tensile load that the insert must withstand shall be determined by mutual agreement between the spool/reel supplier and the magnet wire producer.

B.3.4.4.2 Specified Pullout Force Method

Any movement of the insert during the time the reel is suspended from its resting surface shall constitute a failure.

© Copyright 2005 by the National Electrical Manufacturers Association.

Copyright National Electrical Manufacturers Association
Provided by IHS under license with NEMA
No reproduction or networking permitted without license from IHS
Not for Resale

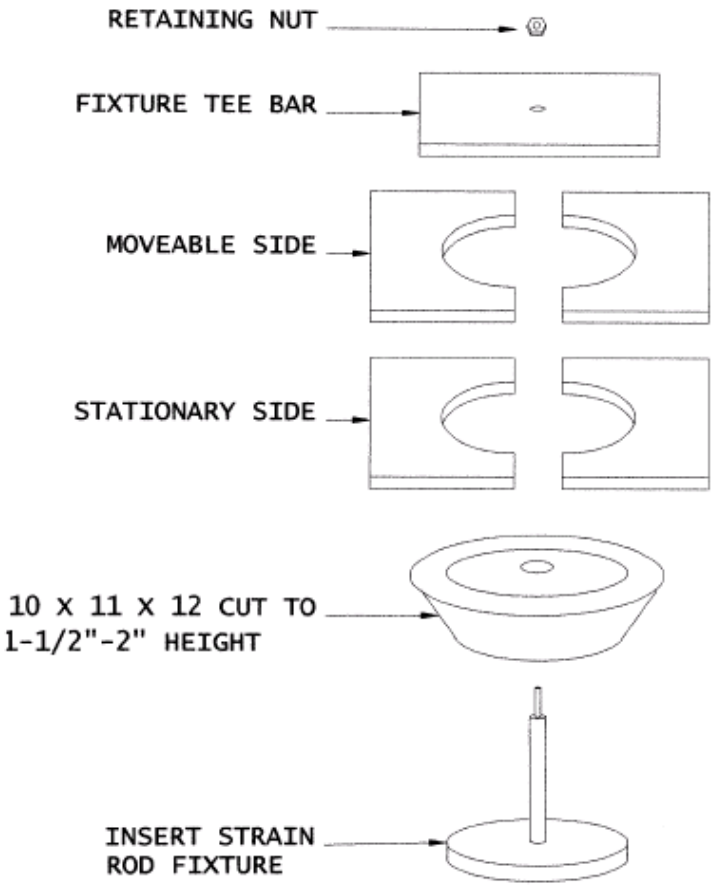

Figure B-11
APPARATUS FOR PULLOUT OF INSERT TEST – DESTRUCTIVE FORCE METHOD

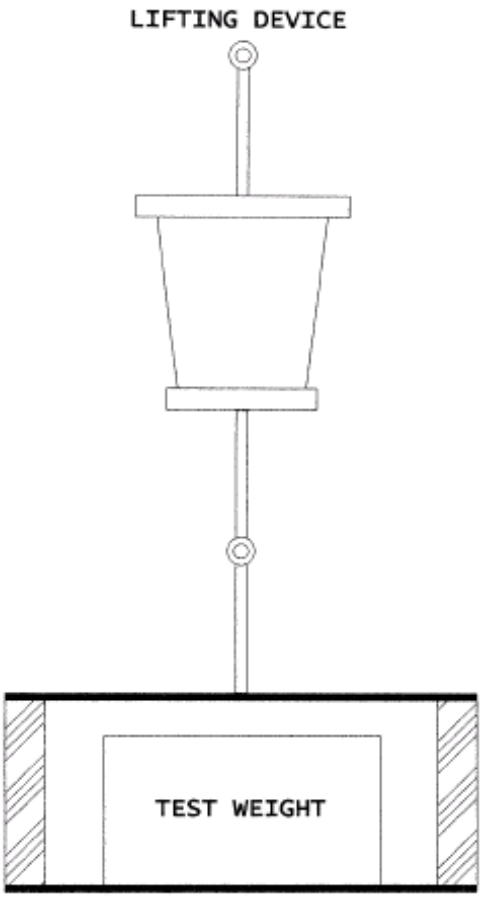

Figure B-12
ATTACHMENT LIFTING DEVICE FOR PULLOUT OF INSERT TEST – SPECIFIC FORCE METHOD

B.3.5 IMPACT TESTING

Safety Statement: Mechanical Hazard – Some tests using mechanical equipment may expose the operator to mechanical hazards. Care must be exercised to protect eyes, fingers, hands, and other body parts from injury.

B.3.5.1 Summary

This procedure provides guidelines for impact testing of spools and reels from small 3" fine wire spools to the larger 1000 lb. Capacity reel. Tests are performed to destruction or damage.

B.3.5.2 Preparation of the Specimens

Flange strengths shall be determined by using an impact device, in most cases comprising a weight with a "dart" attached that is intended to strike the flange at specified positions.

© Copyright 2005 by the National Electrical Manufacturers Association.

Copyright National Electrical Manufacturers Association
Provided by IHS under license with NEMA
No reproduction or networking permitted without license from IHS
Not for Resale

Tests shall be made at room temperature 72–79ºF (22-26ºC). Spools and/or reels to be tested shall be held at the test temperature for at least 24 hours prior to testing. Spools and reels that are solvent bonded shall not be tested prior to 7 days after assembly.

B.3.5.3 Test Equipment

The test shall consist of a free falling weight that will impact the spool or reel flange. The weight shall be held in a track in order to provide a straight fall. A scale graduated in inches shall be attached to the track measuring the distance from the release point to the impact point on the reel. The end of the weight shall constitute a dart having a flat surface that is 1 inch in diameter. Two weights, one of 5 pounds, and one of 50 pounds, which include the weight of the dart, shall be used for the test.

Smaller spools and reels shall be subjected to the impact from a 5-pound weight, and larger reels shall be subjected to the impact of a 50-pound weight. The weight selection shall be at the discretion of the tester.

B.3.5.4 Test Procedure

The spool or reel shall be tested along three (3) axes. For each test a new reel shall be used.

B.3.5.4.1 The spool or reel shall be held firmly in the fixture by means of a long bolt through the arbor hole and into a threaded hole in the fixture shown in Figure B-13, to prevent the item from moving during the test. The impact will be at 0 degrees to the axis of the reel.

B.3.5.4.2 The weight shall be raised to an estimated position on the scale and released. If the flange fails, a new spool or reel shall be placed in the fixture and the weight shall be raised to a lesser height. If the flange does not fail, the weight shall be raised to a higher level and again allowed to impact the flange. This procedure shall be repeated until the flange fails, at which time the distance shall be recorded.

B.3.5.4.3 The test procedure described in B.3.5.4.2 shall be repeated with the spool or reel held in positions that are at 45 degrees and 90 degrees to the axis of the spool or reel.

B.3.5.5 Test Data

The data gathered from these tests shall be used only for comparative purposes. They do not reflect positive values that can in any manner be compared to field conditions. The three axes of testing reflect an attempt to give a reliable indicator of strength.

B.3.5.6 Alternative Procedure

Some tests are performed following production to indicate the flange impact or break strength. These utilize a pendulum weight that strikes the flange at a 0-degree angle to the spool or reel axis. This is referred to an ”Izod” impact test because of the use of the pendulum. Such a test is not a part of this procedure.

--`,,```,,,,````-`-`,,`,,`,`,,`---

© Copyright 2005 by the National Electrical Manufacturers Association.

Copyright National Electrical Manufacturers Association
Provided by IHS under license with NEMA
No reproduction or networking permitted without license from IHS Not for Resale

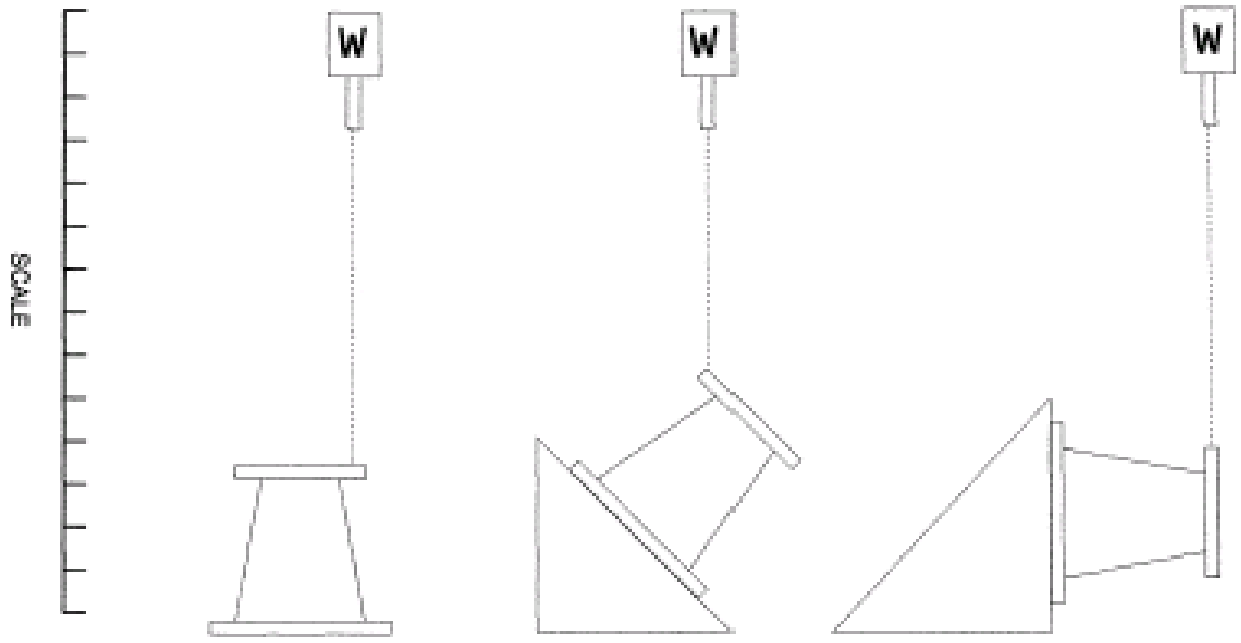

Figure B-13
FLANGE IMPACT TEST

© Copyright 2005 by the National Electrical Manufacturers Association.

Copyright National Electrical Manufacturers Association
Provided by IHS under license with NEMA
No reproduction or networking permitted without license from IHS
Not for Resale

B.4 CUSTOMER LABELING OF MAGNET WIRE SPOOLS AND REELS

B.4.1 Bar Code Symbology---Code 39

These guidelines do not apply to the manufacturer's primary product label, only the secondary label needed to provide customers with data needed for efficient capture of data for warehouse input and output, receiving, and other inventory controls.

B.4.1.1 All bar coded data shall use (AIM) Uniform Symbol Specification for Code 39-1986.

B.4.1.2 The four characters '$,''/,'+,'%,' of the symbology shall not be used on the identification label.

B.4.1.3 The width of the narrow elements shall be within the range of 0.013 to 0.017 inch (0.33 to 0.43 mm). The ratio of the nominal width of the elements to the nominal width of the narrow elements shall be 2:8:1 to 3:2:1.

B.4.1.4 Check digits shall not be added in the bar code.

B.4.1.5 Printed bar code symbols shall meet the reflectivity and contact requirements specified in AIAG-B-1, Section 4.1

B.4.2 Secondary Label Placement

B.4.2.1 Labels on reels shall be placed on the reel wrapper. The secondary identification label shall be at least one inch from the supplier's primary product label.

B.4.2.2 Labels on cartoned products shall be placed on the front of the carton no less than one inch from any other bar coded label. The front of the carton shall be considered the side with the supplier's logo and primary label.

B.4.2.3 If label protection is applied to the label, the method of protection shall allow the data to be scanned with contact and non-contact devices.

B.4.3 Secondary Label Specifications

B.4.3.1 The label shall be 4 inches (102 mm) high by 6 inches (152 mm) long. This size will accommodate all known conditions such as long part numbers.

B.4.3.2 Pressure sensitive adhesive backed labels are recommended. Other types of labels are acceptable as long as adherence to the carton or wrapper is wrinkle free.

B.4.4 Data Area Characteristics

B.4.4.1 The magnet wire industry endorses the use of all data identifiers (DI) developed by the Federation of Automated Coding Technology (FACT). The FACT DI indicated the general category of intended use of the data that follows.

B.4.4.2 A FACT DI shall be at the beginning of each field. This character is not to be included in the human readable line, but is shown in human readable characters under the title for the appropriate area.

B.4.4.3 The customer part number, quantity, and supplier number shall be included on each label in the designated areas and shall be displayed in both human readable characters and bar code symbology. Data characters shall be as follows:

Part Number:	Not to exceed 5.5 inches (140 mm) in length
Quantity:	Six characters, plus Data Identifier
Supplier:	Nine characters, plus Data Identifiers

© Copyright 2005 by the National Electrical Manufacturers Association.

Copyright National Electrical Manufacturers Association
Provided by IHS under license with NEMA
No reproduction or networking permitted without license from IHS
Not for Resale

B.4.4.4 Special data items such as serial number and purchase order number may be added.

B.4.4.5 Each data area shall be separated by thin lines and shall contain its title in the upper left-hand corner (see Figure B-14). Titles shall be printed in 1.50 mm (0.06-inch) high letters.

B.4.5 Label Format

B.4.5.1 Each data item shall contain human readable and bar code data.

B.4.5.2 The bar code symbols shall be directly below the human readable characters and shall be a minimum of 0.4 inches (10.16 mm) in height.

B.4.5.3 Human readable characters shall be bold, with the following heights:

Part number:	0.4 inches (10.16 mm)
Quantity:	0.4 inches (10.16 mm)
Supplier:	0.2 inches (5.08 mm)

B.4.6 Pallets Summary Label

B.4.6.1 A Pallet Summary Label, also known as a “Master Label” (See Figure B-15), should be used when supplier and customer agree that the total contents of a multiple, common item pack should be identified. The total multiple pack should be identified with a master label in a location specified by the customer.

B.4.6.2 At the top of this label, the heading “Master Label” should be printed in bold, one inch (25.4 mm) letters. This may be a separate label applied above the standard 6 inch (152 mm) by 4-inch (102 mm) unified pallet label. The balance of the label format should conform to the specifications for Section B.4.1, B.4.3, B.4.4, and B.4.5 except that the data identifier for serial number shall be ”M” instead of “S”.

© Copyright 2005 by the National Electrical Manufacturers Association.

Copyright National Electrical Manufacturers Association
Provided by IHS under license with NEMA
No reproduction or networking permitted without license from IHS
Not for Resale

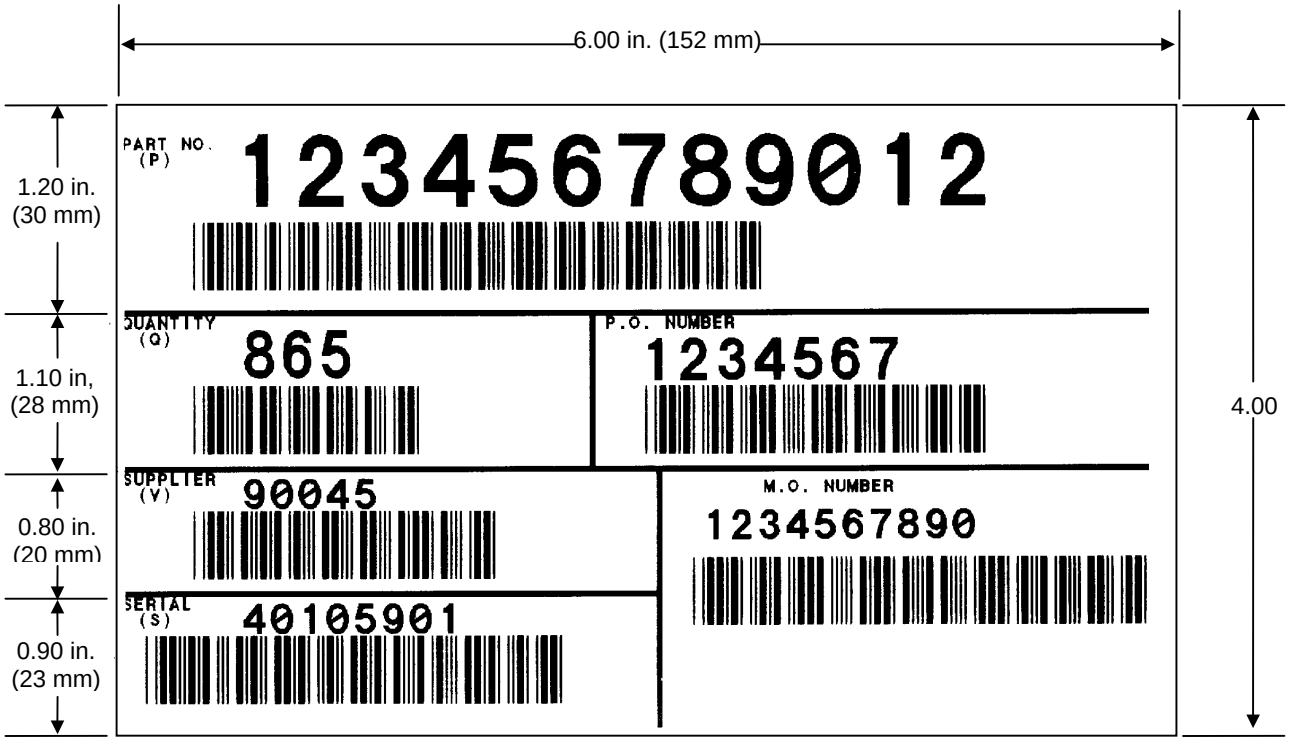

Figure B-14
DATA AREA CHARACTERISTICS

MASTER LABEL

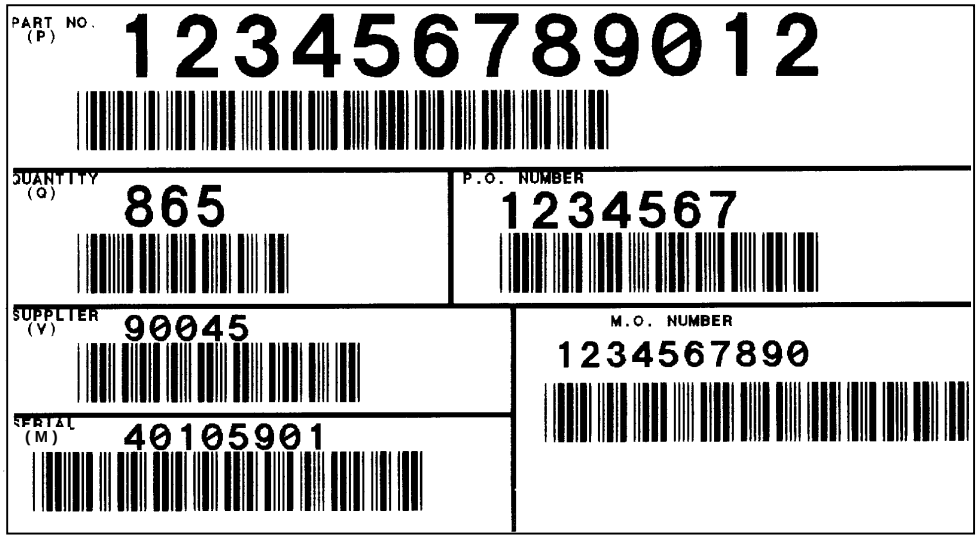

Figure B-15
MASTER LABEL

© Copyright 2005 by the National Electrical Manufacturers Association.

Copyright National Electrical Manufacturers Association
Provided by IHS under license with NEMA
No reproduction or networking permitted without license from IHS
Not for Resale

Copyright National Electrical Manufacturers Association
Provided by IHS under license with NEMA
No reproduction or networking permitted without license from IHS
Not for Resale

Appendix C
CROSS REFERENCE OF NEMA, CANCELLED FEDERAL J-W-1177, AND IEC MAGNET WIRE SPECIFICATIONS

Description			Round Build (Bond Build)				Rectangular/ Square Build			Federal J-W-1177 (Cancelled)		IEC Specifications	
Basecoat/Overcoat/Bond Overcoat	NEMA Standard Number	Thermal Class	Single	Heavy (Type 1)	Triple (Type 2)	Quad. (Type 3)	Single	Heavy (Double)	Quad.	/ No.	Type	IEC No.	Thermal Class if Different
Polyurethane	MW 2-C	105	X	X	-	-	-	-	-	2	U	60317-4	130
Polyurethane/self-bonding	MW 3-C	105	-	X	X	-	-	-	-	44	SUB	60317-2	130
Polyester	MW 5-C	155	X	X	-	-	-	-	-	10	L	60317-3	-
Polyamide	MW 6-C	105	X	X	-	-	-	-	-	3	N	-	-
Polyvinyl acetal	MW 15-A	105	X	X	-	-	-	-	-	-	-	60317-14	-
Polyvinyl acetal	MW 15-C	105	X	X	X	-	-	-	-	4	T	60317-1	-
Polyimide	MW 16-C	240	X	X	X	X	-	-	-	15*	M	60317-46	-
Polyvinyl acetal/polyamide	MW 17-C	105	X	X	-	-	-	-	-	5	TN	-	-
Polyvinyl acetal	MW 18-A	105	-	-	-	-	-	X	X	-	-	-	-
Polyvinyl acetal	MW 18-C	105	-	-	-	-	-	X	X	16	T	60317-17	-
Polyvinyl acetal/self-bonding	MW 19-C	105	-	X	X	X	-	-	-	6	TB	-	-
Polyimide	MW 20-C	240						X	X	18*	M	60317-47	-
Polyester (amide)(imide)/polyamide	MW 24-A	155	X	X	-	-	-	-	-	-	-	60317-24	180
Polyester (amide)(imide)/polyamide	MW 24-C	155	X	X	X	-	-	-	-	11	LN	60317-22	180
Polyester (imide) solderable	MW 26-C	155	X	X	-		-	-	-	28	SPE	60317-23	180
Polyester (imide)/polyamide solderable	MW 27-C	155	X	X	-	-	-	-	-	29	SPEN		-
Polyurethane/polyamide	MW 28-A	130	X	X	-	-	-	-	-	-	-	-	-
Polyurethane/polyamide	MW 28-C	130	X	X	-	-	-	-	-	9	SUN	60317-19	-
Polyurethane/polyamide/self-bonding	MW 29-C	105	-	X	X	-	-	-	-	30	SUNB	-	-
Polyester (amide)(imide)	MW 30-C	180	X	X	X	-	-	-	-	12	H	60317-8	-
Paper covered (also 90'C)	MW 31-C	105	X	X	-	-	-	-	-	-	-	-	-
Paper covered (also 90'C)	MW 33-C	105	-	-	-	-	X	X	-	-	-	60317-27	-
Polyester (amide)(imide)/polyamideimide	MW 35-A	220	X	X	-	-	-	-	-	-	-	60317-25	200
Polyester (amide)(imide)/polyamideimide	MW 35-C	200	X	X	X	-	-	-	-	14	K	60317-13	200
Polyester (amide)(imide)/polyamideimide	MW 36-A	220	-	-	-	-	-	X	X	-	-	-	-
Polyester (amide)(imide)/polyamideimide	MW 36-C	200	-	-	-	-	-	X	X	13	K	60317-29	-

Table continued on next page.

Copyright National Electrical Manufacturers Association
Provided by IHS under license with NEMA
No reproduction or networking permitted without license from IHS
Not for Resale

Description	NEMA Standard Number	Thermal Class	Round Build (Bond Build)				Rectangular/ Square Build			Federal J-W-1177 (Cancelled)		IEC Specifications	
			Single	Heavy (Type 1)	Triple (Type 2)	Quad. (Type 3)	Single	Heavy (Double)	Quad.	/ No.	Type	IEC No.	Thermal Class if Different
Basecoat/Overcoat/Bond Overcoat													
Glass fiber/varnish	MW 41-C	155	X	X	-	-	-	-	-	19	GV	60317-48	-
Glass fiber/varnish	MW 42-C	155	-	-	-	-	X	X	-	22	GV	60317-32	-
Glass fiber/silicone varnish	MW 43-C	200	-	-	-	-	X	X	-	23	GK	60317-33	-
Glass fiber/silicone varnish	MW 44-C	200	X	X	-	-	-	-	-	21	GK	60317-50	**
Polyester glass fiber covered	MW 45-C	155	X	X	-	-	-	-	-	20	DGV	-	-
Polyester glass fiber covered	MW 46-C	155	-	-	-	-	X	X	-	25	DGV	-	-
Polyester glass fiber/silicone varnish	MW 47-C	200	X	X	-	-	-	-	-	24	DGH	-	-
Polyester glass fiber/silicone varnish	MW 48-C	200	-	-	-	-	X	X	-	26	DGH	-	-
Glass fiber/high temperature varnish	MW 50-C	180	X	X	-	-	-	-	-	31	GO	60317-49	-
Polyester glass fiber/high temperature varnish	MW 51-C	180	X	X	-	-	-	-	-	32	DGO	-	-
Glass fiber/high temperature varnish	MW 52-C	180	-	-	-	-	-	X	X	33	GO	60317-31	
Polyester glass fiber/high temperature varnish	MW 53-C	180	-	-	-	-	-	X	X	34	DGO	-	-
Aromatic polyamide paper covered	MW 60-A	220	-	-	-	-	-	X	-	-	-	-	-
Aromatic polyamide paper covered	MW 60-C	220	-	-	-	-	-	X	-	35	PAP	60317-53	-
Aromatic polyamide paper covered	MW 61-A	220	-	X	-	-	-	-	-	-	-	-	-
Aromatic polyamide paper covered	MW 61-C	220	-	X	-	-	-	-	-	-	-	60317-52	-
Aromatic polyimide tape covered	MW 62-C	220	-	-	-	-	X	X	-	-	-	60317-44	240
Aromatic polyimide tape covered	MW 63-C	220	X	X	-	-	-	-	-	-	-	60317-43	240
Aromatic polyimide tape covered	MW 64-C	240	-	-	-	-	X	X	-	-	-	60317-44	
Aromatic polyimide tape covered	MW 65-C	240	X	X	-	-	-	-	-	-	-	60317-43	
Polyester(amide)(imide) Hermetic Applications	MW 72-C	180	-	X	-	-	-	-	-	-	-	60317-10	PEI only
Polyester(amide)(imide)/polyamideimide Hermetic Applications	MW 73-A	220	-	X	-	-	-	-	-	-	-	60317-25	200
Polyester(amide)(imide)/polyamideimide Hermetic Applications	MW 73-C	200	-	X	-	-	-	-	-	-	-	60317-13	-

Table continued on following page

Copyright National Electrical Manufacturers Association
Provided by IHS under license with NEMA
No reproduction or networking permitted without license from IHS
Not for Resale

Description			Round Build (Bond Build)				Rectangular/ Square Build			Federal J-W-1177 (Cancelled)		IEC Specifications	
ecoat/Overcoat/Bond Overcoat	NEMA Standard Number	Thermal Class	Single	Heavy (Type 1)	Triple (Type 2)	Quad. (Type 3)	Single	Heavy (Double)	Quad.	/ No.	Type	IEC No.	Thermal Class if Different
Polyester(amide)(imide)	MW 74-A	220	X	X	-	-	-	-	-	-	-	60317-15	180, PEI only
Polyester(amide)(imide)	MW 74-C	200	X	X	-	-	-	-	-	43	PEAI	60317-42	-
Polyurethane	MW 75-C	130	X	X	-	-	-	-	-	37	SP	60317-4	-
Polyester(amide)(imide)/polyamide	MW 76-A	180	X	X	-	-	-	-	-	-	-	60317-24	-
Polyester(amide)(imide)/polyamide	MW 76-C	180	X	X	X	-	-	-	-	-	-	60317-22	-
Polyester (imide) solderable	MW 77-C	180	X	X	-	-	-	-	-	39	SPEI	60317-23	-
Polyester (imide)/polyamide solderable	MW 78-C	180	X	X	-	-	-	-	-	40	SPEIN	-	-
Polyurethane	MW 79-C	155	X	X	X	-	-	-	-	41	SPU	60317-20	-
Polyurethane/polyamide	MW 80-A	155	X	X	-	-	-	-	-	-	-	-	-
Polyurethane/polyamide	MW 80-C	155	X	X	X	-	-	-	-	42	SPUN	60317-21	-
Polyamideimide	MW 81-C	220	X	X	-	-	-	-	-	-	-	60317-26	200
Polyurethane	MW 82-C	180	X	X	X		-	-	-	-	-	60317-51	-
Polyurethane/polyamide	MW 83-C	180	X	X	X		-	-	-			60317-55	-
Polyester/Polyamideimide w/ Self-Bonding Overcoat	MW 102-A	180	-	X	X		-	-	-			-	-
Polyester/Polyamideimide w/ Self-Bonding Overcoat	MW 102-C	180	-	X	X	-	-	-	-	-	-	60317-38	
Polyurethane/self-bonding	MW 130-C	130	-	X	X	-	-	-	-				
Polyurethane/polyamide/self-bonding	MW 131-C	130	-	X	X	-	-	-	-				
Polyurethane/self-bonding	MW 135-C	155	-	X	X	-	-	-	-			60317-35	
Polyurethane/polyamide/self-bonding	MW 136-C	155	-	X	X	-	-	-	-				

Copyright National Electrical Manufacturers Association
Provided by IHS under license with NEMA
No reproduction or networking permitted without license from IHS
Not for Resale

Materials - With No US Equivalent

			IEC Build Grades										
Build Grades			**G1**	**G2, G1B**	**G3, G2B**		**G1**	**G2**					
Polyimide	-	220	X	X	-	-	-	-	-	-	-	60317-7	-
Polyurethane bunched with silk		130										60317-11	
Polyvinyl acetal	-	120	X	X	-	-	-	-	-	-	-	60317-12	-
Polyester	-	155	-	-	-	-	X	X	-	-	-	60317-16	-
Polyvinyl acetal	-	120	-	-	-	-	X	X	-	-	-	60317-18	-
Polyesterimide	-	180	-	-	-	-	X	X	-	-	-	60317-28	-
Polyimide	-	220	-	-	-	-	X	X	-	-	-	60317-30	-
Polyester	-	130L	X	X	-	-	-	-	-	-	-	60317-34	-
Polyester (imide) w/ Self bonding Overcoat Solderable	-	180	-	X	X	-	-	-	-	-	-	60317-36	-
Polyester (imide) w/ Self bonding Overcoat	-	180	-	X	X	-	-	-	-	-	-	60317-37	-
Glass Fiber Braided Polyester (imide) Varnish treated Bare or Enameled	-	180	-	-	-	-	X	X	-	-	-	60317-39	-
Glass Fiber Braided Silicone Varnish treated Bare or Enameled	-	200	-	-	-	-	X	X	-	-	-	60317-40	-
Polyester Solderable	-	130L	X	X	-	-	-	-	-	-	-	60317-41	-
Polyester	-	155L	X	X	-	-	-	-	-	-	-	60317-54	-

* Thermal Class 220
** Silicone varnish not specified