9009279 0001436 585

A-33-17

National Electrical Manufacturers Association
2101 L Street, N.W. Suite 300
Washington, D.C. 20037 (202) 457-8400

PROPOSED, NEW AND REVISED STANDARDS

TO ALL REPRESENTATIVES OF MEMBER COMPANIES
IN THE MAGNET WIRE SECTION

Subject: Revision No. **1** to the NEMA Standards Publication for *Magnet Wire,* NEMA Pub. No. **MW 1000-1987**

Dear Representative:

Revision No. 1, consisting of printed pages dated OCTOBER 1987, is enclosed for insertion in your copy of the subject publication. Also enclosed is a new title page to show that your book now contains Revision No. 1.

Please insert these pages carefully since extra copies of this revision are not available.

Sincerely yours,

Krystyna McIver
Standards Publications Editor

Encl: Revision No. **1** to MW 1000-1987
Copies to: All known Holders of MW 1000

Copyright National Electrical Manufacturers Association
Provided by IHS under license with NEMA
No reproduction or networking permitted without license from IHS
Not for Resale

9009279 0001437 411

A-33-17

Endorsed by the Electrical and Electronic Manufacturers Association of Canada for Use in Canada

NEMA STANDARDS PUBLICATION/NO. MW 1000

nema

Magnet Wire

NEMA

NATIONAL ELECTRICAL MANUFACTURERS ASSOCIATION ■ 2101 L STREET, N.W., WASHINGTON, D.C. 20037

Copyright National Electrical Manufacturers Association
Provided by IHS under license with NEMA
No reproduction or networking permitted without license from IHS
Not for Resale

9009279 0001438 358

MW 1000
MAGNET WIRE

Including Revision No. 1—October 1987

Published by

National Electrical Manufacturers Association
2101 L Street, NW
Washington, DC 20037
(202) 457-8400

© 1988 by National Electrical Manufacturers Association

Copyright National Electrical Manufacturers Association
Provided by IHS under license with NEMA
No reproduction or networking permitted without license from IHS

Not for Resale

Table of Contents

PART 1—GENERAL

		Page
	Foreword	i
	Purpose	ii
	Scope	ii
	How to Use this Publication	iii
1.1	REFERENCED STANDARDS	1
1.2	MATERIALS	2
1.2.1	Conductors—Round, Square and Rectangular, Copper and Aluminum	2
1.2.2	Insulating Materials	2
1.3	MANUFACTURING	2
1.3.1	Application of Insulation	2
1.3.2	Intermediate Sizes	3
1.3.3	Joints	3
1.3.4	Packaging	3
1.4	TEST CONDITIONS AND DEFINITIONS	3
1.4.1	Selection of Specimen	3
1.4.2	Ambient Conditions of Test	3
1.4.3	Power Frequency	3
1.4.4	Visual Examination	3
1.4.5	Crack in Film Coating	3
1.4.6	Sudden Jerk (Rapid Elongation)	3
1.4.7	Mandrels	3
1.4.8	Wire Shapes	4
1.4.9	Round Bare Wire Sizes	4
1.4.10	Periodic Conformance	4
1.4.11	Retests	4
1.4.12	Use of Solvents	4
1.5	DIMENSIONS AND METRIC EQUIVALENTS	4
1.5.1	Rounding Off Numerical Values	4
1.6	DATA IN SUPPORT OF THERMAL CLASS FOR FILM-COATED MAGNET WIRE	4
1.50	ORDERING AND ENGINEERING INFORMATION	4
1.50.1	Ordering Information	4
1.50.2	Preferred Number Series	5
1.50.3	Lubrication	5
1.50.4	Copper at Elevated Temperatures	5
1.50.5	ANSI Test Conditions and Procedures for Film-Coated Magnet Wire	5
1.50.6	Comparison Between AWG and IEC R-40 Series	5

Copyright National Electrical Manufacturers Association
Provided by IHS under license with NEMA
No reproduction or networking permitted without license from IHS
Not for Resale

PART 1—TABLES

Part 1 Table No.	AWG Size	Type of Coating	Dimensional Characteristics	Page
	Round Film-Coated Magnet Wire			
1	14–56	Single	Bare wire diameter,	6
2	4–50	Heavy	minimum increase in	7
3	14–30	Triple	diameter, and maximum	8
4	14–52	Type 1 Self-bonding	Bare wire diameter,	9
5	14–50	Type 2 Self-bonding	minimum increase in	10
6	16–30	Type 3 Self-bonding	diameter for film and overall diameter	11
	Round Fibrous-covered Magnet Wire			
7	4/0–30	Single glass	Bare wire diameter,	12
8	4/0–30	Double glass	minimum increase in	13
9	4/0–30	Single Polyester-glass	diameter, and maximum	14
10	4/0–30	Double Polyester-glass	over bare, single and heavy film	15
11	Round bare wire		Maximum diameters	16
12	Round bare wire		Fines sizes by resistance	16
13	Rectangular bare wire		Dimensions and radii	17
14	Rectangular bare wire		Tolerances for thickness and width	17
15	Round bare wire		Comparison between AWG and IEC R-40 series	18

Copyright National Electrical Manufacturers Association
Provided by IHS under license with NEMA
No reproduction or networking permitted without license from IHS
Not for Resale

PART 2—PROPERTIES AND REQUIREMENTS

Insulation	Thermal Class	Round	Rectangular and Square	Part 2 Section	Page
Oleoresinous (Single)	105	X	–	MW 1-C	23
Polyurethane (Single and Heavy)	105	X	–	MW 2-C	25
Polyurethane with Self-bonding Overcoat (Types 1 and 2)	105	X	–	MW 3-C	29
Polyester (Single and Heavy)	155	X	–	MW 5-C	33
Polyamide (Single and Heavy)	105	X	–	MW 6-C	37
Epoxy (Single, Heavy, and Triple)	130	X	–	MW 9-C	41
Cotton covered (Single and Double)	90 or 105	X	–	MW 11-C	47
Epoxy (Heavy and Quadruple)	130	–	X	MW 14-C	51
Polyvinyl acetal (Single and Heavy)	105	X	–	MW 15-A	53
Polyvinyl acetal (Single, Heavy and Triple)	105	X	–	MW 15-C	57
Polyimide (Single, Heavy and Triple)	220	X	–	MW 16-C	63
Polyvinyl acetal overcoated with polyamide (Single and Heavy)	105	X	–	MW 17-C	69
Polyvinyl acetal (Heavy and Quadruple)	105	–	X	MW 18-A	73
	105	–	X	MW 18-C	75
Polyvinyl acetal with Self-bonding overcoat (Types 1, 2, and 3)	105	X	–	MW 19-C	77
Polyimide (Heavy and Quadruple)	220	–	X	MW 20-C	83
Silk-covered (Single and Double)	90 or 105	X	–	MW 21-C	85
Nylon fiber covered (Single and Double)	90 or 105	X	–	MW 22-C	89
Polyester (amide) (imide) overcoated with polyamide (Single and Heavy)	155	X	–	MW 24-A	93
Polyester (amide) (imide) overcoated with polyamide (Single, Heavy and Triple)	155	X	–	MW 24-C	97
Polyester (imide) coated (Single and Heavy)	155	X	–	MW 26-C	103
Polyester (imide) overcoated with polyamide (Single and Heavy)	155	X	–	MW 27-C	107
Polyurethane overcoated with polyamide (Single and Heavy)	130	X	–	MW 28-C	111
Polyurethane overcoated with polyamide and self-bonding overcoated (Types 1 and 2)	105	X	–	MW 29-C	115
Polyester (amide) (imide) (Single, Heavy and Triple)	180	X	–	MW 30-C	119
Paper covered	90 or 105	X	–	MW 31-C	125
Double paper single cotton covered	90 or 105	–	X	MW 32-C	127
Paper covered	90 or 105	–	X	MW 33-C	129
Polyester (amide) (imide) overcoated with polyamideimide (Single and Heavy)	220	X	–	MW 35-A	131
(Single, Heavy and Triple)	200	X	–	MW 35-C	135
(Heavy and Quadruple)	220	–	X	MW 36-A	141
	200	–	X	MW 36-C	143
Glass fiber covered (Single and Double)	155	X	–	MW 41-C	145
Glass fiber covered (Single and Double)	155	–	X	MW 42-C	149
Glass fiber covered silicone treated (Single and Double)	200	–	X	MW 43-C	157
	200	X	–	MW 44-C	165
Polyester glass fiber covered (Single and Double)	155	X	–	MW 45-C	169
	155	–	X	MW 46-C	173
Polyester glass fiber covered silicone treated (Single and Double)	200	X	–	MW 47-C	181
	200	–	X	MW 48-C	185
Glass fiber covered, High temperature organic varnish treated (Single and Double)	180	X	–	MW 50-C	193
Polyester glass fiber covered High temperature organic varnish treated (Single and Double)	180	X	–	MW 51-C	197
Glass fiber covered, High temperature organic varnish treated (Single and Double)	180	–	X	MW 52-C	201
Polyester glass fiber covered, High temperature organic varnish treated (Single and Double)	180	–	X	MW 53-C	209

Copyright National Electrical Manufacturers Association
Provided by IHS under license with NEMA
No reproduction or networking permitted without license from IHS
Not for Resale

PART 2—PROPERTIES AND REQUIREMENTS *(Cont'd)*

Insulation	Thermal Class	Round	Rectangular and Square	Part 2 Section	Page
Aromatic polyamide paper covered	220	–	X	MW 60-A	217
	200	–	X	MW 60-C	219
	220	X	–	MW 61-A	221
	200	X	–	MW 61-C	223
Polyimide for Hermetic Applications (Heavy)	220	X	–	MW 71-C	225
Polyester (amide) (imide) for Hermetic Applications (Heavy)	180	X	–	MW 72-C	227
Polyester (amide) (imide) overcoated with Polyamideimide for Hermetic Applications (Heavy)	220	X	–	MW 73-A	229
	200	X	–	MW 73-C	231
Polyester (amide) (imide) overcoated with Polyamide (Single and Heavy)	220	X	–	MW 74-A	233
	200	X	–	MW 74-C	237
Polyurethane (Single and Heavy)	130	X	–	MW 75-C	241
Polyester (amide) (imide) overcoated with Polyamide (Single and Heavy)	180	X	–	MW 76-A	245
(Single, Heavy and Triple)	180	X	–	MW 76-C	249
Polyester (imide) (Single and Heavy)	180	X	–	MW 77-C	255
Polyester (imide) overcoated with Polyamide (Single and Heavy)	180	X	–	MW 78-C	259
Polyurethane overcoated with Polyamide (Single and Heavy)	155	X	–	MW 80-C	263

Copyright National Electrical Manufacturers Association
Provided by IHS under license with NEMA
No reproduction or networking permitted without license from IHS
Not for Resale

PART 3—TEST PROCEDURES

Page

ROUTINE TESTS

3.1 Dimensions 267
3.2 Adherence and Flexibility 268
3.3 Elongation 269
3.4 Heat Shock 270
3.6 Springback 271
3.7 Dielectric Strength 274
3.8 Continuity 275
3.9 Completeness of Cure 279
3.10 Bend 279
3.11 Coverage 279
3.12 Solderability 279

PERIODIC CONFORMANCE TESTS

3.50 Thermoplastic Flow 282
3.51 Solubility 282
3.52 Dielectric Strength at Rated Temperature 283
3.54 Transformer Oil Resistance 283
3.55 Refrigerant 22 Extraction 284
3.56 Retained Dielectric After Refrigerant 22 Conditioning 285
3.57 Bond 285
3.58 Thermal Endurance 286
3.59 Scrape Resistance 288

Appendix A Reference Test Conditions and Procedures for Film Coated Magnet Wire 289

Copyright National Electrical Manufacturers Association
Provided by IHS under license with NEMA
No reproduction or networking permitted without license from IHS
Not for Resale

Part 2
PROPERTIES AND REQUIREMENTS LISTING BY THERMAL CLASS, COATING, COVERING, AND FORM

Thermal Class	Coating, Covering and Form	See Part 2, Section	
		Aluminum	Copper
	FILM COATED ROUND MAGNET WIRE		
105	Oleoresinous	–	MW 1-C
105	Polyamide	–	MW 6-C
105	Polyvinyl acetal	MW 15-A	MW 15-C
105	Polyvinyl acetal	–	MW 17-C
105 Solderable	Polyurethane	–	MW 2-C
105 Self Bonding	Polyurethane	–	MW 3-C
105 Self Bonding	Polyurethane overcoated with polyamide	–	MW 29-C
105 Self Bonding	Polyvinyl acetal	–	MW 19-C
130	Epoxy	–	MW 9-C
130 Solderable	Polyurethane overcoated with polyamide	–	MW 28-C
130 Solderable	Polyurethane	–	MW 75-C
155	Polyester	–	MW 5-C
155	Polyester (amide) (imide) overcoated with polyamide	MW 24-A	MW 24-C
155 Solderable	Polyester (imide)	–	MW 26-C
155 Solderable	Polyester (imide) overcoated with polyamide	–	MW 27-C
155 Solderable	Polyurethane overcoated with polyamide	–	MW 80-C
180	Polyester (amide) (imide)	–	MW 30-C
180	Polyester (amide) (imide) overcoated with polyamide	MW 76-A	MW 76-C
180 Solderable	Polyester (imide)	–	MW 77-C
180 Solderable	Polyester (imide) overcoated with polyamide	–	MW 78-C
180 Hermetic	Polyester (amide) (imide)	–	MW 72-C
200	Polyester (amide) (imide) overcoated with polyamideimide	–	MW 35-C
200	Polyester (amide) (imide)	–	MW 74-C
200 Hermetic	Polyester (amide) (imide) overcoated with polyamideimide	–	MW 73-C
220	Polyimide	–	MW 16-C
220	Polyester (amide) (imide) overcoated with polyamideimide	MW 35-A	–
220	Polyester (amide) (imide)	MW 74-A	–
220 Hermetic	Polyimide	–	MW 71-C
220 Hermetic	Polyester (amide) (imide) overcoated with polyamideimide	MW 73-A	–
	FILM COATED RECTANGULAR AND SQUARE MAGNETIC WIRE		
105	Polyvinyl acetal	MW 18-A	MW 18-C
130	Epoxy	–	MW 14-C
200	Polyester (amide) (imide) overcoated with polyamideimide	–	MW 36-C
220	Polyimide	–	MW 20-C
220	Polyester (amide) (imide) overcoated with polyamideimide	MW 36-A	–
	FIBROUS COVERED ROUND MAGNET WIRE		
90 or 105	Cotton covered	–	MW 11-C
90 or 105	Silk covered	–	MW 21-C
90 or 105	Nylon fiber covered	–	MW 22-C
90 or 105	Paper covered	–	MW 31-C
155	Glass fiber covered	–	MW 41-C
155	Polyester glass fiber covered	–	MW 45-C

Copyright National Electrical Manufacturers Association
Provided by IHS under license with NEMA
No reproduction or networking permitted without license from IHS
Not for Resale

PROPERTIES AND REQUIREMENTS LISTING BY THERMAL CLASS, COATING, COVERING, AND FORM

Thermal Class	Coating, Covering and Form	See Part 2, Section	
		Aluminum	Copper
180	Glass fiber covered, High temperature organic varnish treated	–	MW 50-C
180	Polyester glass fiber covered, High temperature organic varnish treated	–	MW 51-C
200	Glass fiber covered, Silicone treated	–	MW 44-C
200	Polyester glass fiber covered, Silicone treated	–	MW 47-C
200	Aromatic polyamide paper covered	–	MW 61-C
220	Aromatic polyamide paper covered	MW 61-A	–
	FIBROUS COVERED REACTANGULAR AND SQUARE MAGNET WIRE		
90 or 105	Double paper, Single cotton covered	–	MW 32-C
90 or 105	Paper covered	–	MW 33-C
155	Glass fiber covered	–	MW 42-C
155	Polyester glass fiber covered	–	MW 46-C
180	Glass fiber covered, High temperature organic varnish treated	–	MW 52-C
180	Polyester glass fiber covered, High temperature organic varnish treated	–	MW 53-C
200	Glass fiber covered, Silicone treated	–	MW 43-C
200	Polyester glass fiber covered, Silicone treated	–	MW 48-C
200	Aromatic polyamide paper covered	–	MW 60-C
220	Aromatic polyamide paper covered	MW 60-A	–

Copyright National Electrical Manufacturers Association
Provided by IHS under license with NEMA
No reproduction or networking permitted without license from IHS
Not for Resale

Foreword

These standards were developed by the Magnet Wire Section of NEMA, working closely with representatives of various industries which use magnet wire.

This publication supersedes the NEMA Standards Publication for Magnet Wire, MW 1000-1981. It is currently under review by ANSI for adoption as an American National Standard.

The standards contained in this publication are periodically reviewed by the NEMA Magnet Wire Section for revisions considered necessary to keep them up to date with changes in technology. Proposed revisions should be submitted to:

Manager, Engineering Department
National Electrical Manufacturers Association
2101 L Street, N.W.
Washington, D.C. 20037

This publication includes a postcard, which should be filled out and returned to NEMA. You are then assured of receiving a copy of any changes which have been adopted for inclusion in this book. If you insert such changes in the book as you receive them, your copy will always be up to date.

Copyright National Electrical Manufacturers Association
Provided by IHS under license with NEMA
No reproduction or networking permitted without license from IHS
Not for Resale

9009279 0001447 360

Purpose

The Standards contained herein apply to round, rectangular, and square, plated or unplated, copper or aluminum magnet wire with film coatings or fibrous coverings, or a combination of both, for use in electrical apparatus. They include definitions, type designation, dimensions, constructions, performance, and methods of testing magnet wire generally used in the winding of coils for electrical equipment.

Scope

This publication is designed to present, in concise and convenient form, all of the existing NEMA Standards for magnet wire. This publication is classified as NEMA Standard unless otherwise indicated.

Copyright National Electrical Manufacturers Association
Provided by IHS under license with NEMA
No reproduction or networking permitted without license from IHS
Not for Resale

How to Use this Publication

Part 1 (blue) of this publication deals with information common to all types of magnet wire; that is, ordering information, general material requirements, manufacturing, data in support of thermal rating, dimensions with metric equivalents, and general test conditions and definitions. Decimal subnumbers, with the Part number shown first, separate the various types of information.

Part 2 (yellow) consists of product specifications giving dimensions and requirements for magnet wire with different types of coatings and/or coverings. Insofar as possible, the product specifications are complete on one sheet since they are arranged to include only one build or covering per sheet. The title on each individual sheet identifies the product. (Example: POLYVINYL ACETAL, Single, Enamelled Round Copper Magnet Wire, MW 15-C. There are two more MW 15-C sheets to cover heavy and triple builds. MW 15-A covers the aluminum version of the same generic product.)

Part 3 (green) contains the test procedures to be followed in determining compliance with the requirements given in Part 2. The tests are consolidated, with all the tests of a certain property identified by the same primary number. Decimal subnumbers, with the Part number provided first, separate the shapes and insulations as follows:

X. Type of Test (1-49)[1]	1. Dimensions 2. Adherence and Flexibility, etc.
X.X. Shape of Wire	X.1 Round X.2 Rectangular
X.X.X. Insulation	X.X.1 Film Coated X.X.2 Fibrous Covered

First review Part 1 for general information. Then in Part 2 locate the type of insulation and conductor in which you are interested. Part 2 is arranged in numerical order as shown on page i. A listing of the sections in Part 2 by thermal class, covering and form is shown on page iv. The section in Part 2 will give you the requirements to be met and will refer you to the test procedures in Part 3 to determine whether the magnet wire conforms with these requirements.

[1]Those tests numbered 50 and higher are periodic conformance tests. See 1.4.10.

For instance:
1.1.1 Dimensions, round, film-coated
2.2.2 Adherence and Flexibility, rectangular, fibrous covered
50.1.1 Thermoplastic Flow, round, film-coated

An index of the main test paragraphs is given on page iii of the Table of Contents.

Copyright National Electrical Manufacturers Association
Provided by IHS under license with NEMA
No reproduction or networking permitted without license from IHS
Not for Resale

9009279 0001449 133

Part 1
GENERAL

1.1 REFERENCED STANDARDS

In this publication, reference is made to the standards listed below:

American Society for Testing and Materials
1916 Race Street
Philadelphia, PA 19103

ASTM B3-74 (1980)	*Standard Specification for Soft or Annealed Copper Wire*
ASTM B32-83	*Standard Specification for Solder Metal*
ASTM B193-78 (1983)	*Standard Test Method for Resistivity of Electrical Conductor Materials*
ASTM D149-81	*Standard Test Method for Dielectric Breakdown Voltage and Dielectric Strength of Solid Electrical Insulating Materials at Commercial Power Frequencies*
ASTM D1676-83	*Standard Methods for Testing Film-Insulated Magnet Wire*
ASTM D1932-83	*Standard Test Method for Thermal Endurance of Flexible Electrical Insulating Varnishes*
ASTM D2307-86	*Standard Test Method for Relative Thermal Endurance of Film-Insulated Round Magnet Wire*
ASTM D3353-82	*Standard Methods for Testing Fibrous-Insulated Magnet Wire*
ASTM E8-84	*Standard Methods of Tension Testing of Metallic Materials*
ASTM E29-67 (1980)	*Standard Recommended Practice for Indicating Which Places of Figures are to be Considered Significant in Specified Limiting Values*

American National Standards Institute /
Institute of Electrical and Electronics Engineers
1430 Broadway
New York, NY 10018

345 East 47th Street
New York, NY 10017

ANSI/IEEE Std 1-1986	*General Principles for Temperature Limits in the Rating of Electric Equipment and for the Evaluation of Electrical Insulation*
ANSI/IEEE Std 4-1978	*Techniques for High Voltage Testing*

Copyright National Electrical Manufacturers Association
Provided by IHS under license with NEMA
No reproduction or networking permitted without license from IHS
Not for Resale

9009279 0001450 955

1.2 MATERIALS

1.2.1 Conductors—Round, Square and Rectangular, Copper and Aluminum

1.2.1.1 DIMENSIONS AND RESISTIVITY

The conductor, after insulating, shall comply with the requirements given for dimensions in the applicable section in Part 2. The resistivity shall be determined in accordance with ASTM B193 and shall not exceed the following values:

Conductors	Maximum Resistivity	
	Ohm-circular mil/ft	Ohm mm^2/m
Copper	10.371	0.017241
Aluminum	16.782	0.027898

These resistivities correspond to a conductivity, in percent International Annealed Copper Standard (IACS), of 100 for copper and 61.8 for aluminum at 20 °C (68 °F).

1.2.1.2 CHARACTERISTICS OF ALUMINUM

The mechanical, electrical, and chemical characteristics of aluminum magnet wire differ from those of copper magnet wire because of the inherent differences in the conductor materials.

The differences are reflected in certain test procedures and/or performance requirements for aluminum magnet wire, such as elongation, adherence and flexibility, heat shock, scrape resistance, continuity, and thermal endurance.

Film-coated aluminum round wire sizes 10 through 14 AWG (2.59 through 1.63 mm) shall have a yield strength not less than 7000 psi (48.3 MPa) and a tensile strength not less than 13,000 psi (89.6 MPa); sizes 15 through 25 AWG (1.45 through 0.455 mm) shall have a yield strength not less than 8000 psi (55.2 MPa) and a tensile strength not less than 13,000 psi (89.6 MPa). Larger round sizes, all rectangular film-coated and all fibrous-covered wire shall have a yield strength not less than 5000 psi (34.5 MPa) and shall have a tensile strength not less than 9000 psi (62.1 MPa).

The yield strength shall be determined in accordance with the 0.2 percent offset method described in ASTM E8.

The testing procedure may include a prestretch of the specimen of 0.25 percent which may remove small kinks, waves, and bends in the specimen prior to test. (This sentence is classified as Authorized Engineering Information.)

1.2.2 Insulating Materials

1.2.2.1 Film and fibers shall conform to the latest revisions of the applicable standards of ANSI, ASTM, or NEMA.

1.2.2.2 Various resins are referred to under Insulating Materials in Part 2. The resins specified may be modified. A modified resin is defined as: "A resin that has undergone a chemical change, or contains one or more additives to enhance certain performance or application characteristics. It must retain the essential chemical identity of the original resin and the coated conductor must meet all specified test requirements of the appropriate MW Standard."

1.2.2.3 Various resins are identified under the Insulating Materials headings in Part 2. These resin descriptions are given with the primary generic type listed first and optional types listed in parentheses. Combinations of the primary generic resin with one or more of those in parentheses which have been found by experience to meet all specified requirements shall also be permitted.

1.3 MANUFACTURING

1.3.1 Application of Insulation

The wire shall be coated or covered with a smooth continuous insulation and shall meet the applicable requirements of Part 2 when the wire is taken directly from the spool, reel, or container.

Film covering shall be smooth and continuous, free from streakiness, blisters, and foreign material.

Fibrous coverings shall be wrapped firmly, closely, evenly, and continuously around the wire. When more than one layer of fibrous covering is applied, adjacent layers shall be wound in opposite directions.

When more than one layer of paper covering is applied, adjacent layers shall be permitted to be wound in the same or in opposite directions.

The relation of the degree of lapping of the paper to the number of layers of paper is as follows:

Degree of Lap	Equivalent Number of Paper Thickness
0	1
½	2
⅔	3
¾	4

Copyright National Electrical Manufacturers Association
Provided by IHS under license with NEMA
No reproduction or networking permitted without license from IHS
Not for Resale

9009279 0001451 891

When the wire is to be both film coated and fibrous covered, the film-coated wire shall meet the applicable requirements of Part 2 before it is covered with fiber.

1.3.2 Intermediate Sizes

1.3.2.1 Round and Square

For wire sizes between the AWG sizes, the increase in dimension due to the film coating or fibrous covering shall be the same as for the next larger size (AWG), and the test values shall be the same as for the next smaller size (AWG).

1.3.2.2 Rectangular

The increase in dimensions due to the insulation for rectangular wires having dimensions not shown in the applicable section in Part 2 shall be the same as that specified for the next larger thickness or width.

1.3.3 Joints

Round and rectangular wire shall be in one continuous length for each spool, reel, or container. Necessary joints shall be either brazed with silver solder or welded. The number of joints shall be held to a minimum. The surface of the wire at the joints shall be smooth and suitably insulated.

The dimensions of the wire at the joints shall be substantially the same as at any other point on the wire.

For 30 AWG (0.254 mm) and heavier wire, the tensile strength of the joints shall be not less than 80 percent of the tensile strength of the wire 3 feet (1 meter) from the joint. For 31 AWG (0.226 mm) and finer copper wire, the tensile strength of the joint shall be at least 20,000 psi (138 MPa). This strength shall be based on meeting or exceeding the yield strength of annealed copper at 0.5 percent elongation.

1.3.4 Packaging

The wire shall be wound evenly and compactly on spools or reels, or shall be deposited in containers uniformly and compactly and free from kinks. (Refer to 1.50.3.)

The wire shall be packed in such a manner as to protect it from damage during transit.

1.4 TEST CONDITIONS AND DEFINITIONS

1.4.1 Selection of Specimen

If there is evidence that the wire on the surface of the package has been damaged, the damaged wire shall be discarded before specimens are taken for testing. The wire to be tested shall be removed from the package in such a way as to prevent damage such as bending, stretching, kinking, etc., to the specimen.

1.4.2 Ambient Conditions of Test

Unless otherwise specified, all tests shall be made at room temperature which shall be between 20 °C (68 °F) and 45 °C (113 °F).

1.4.3 Power Frequency

"60 hertz" shall be defined as the use of 60-hertz commercial power.

1.4.4 Visual Examination

"Normal vision" shall be defined as 20/20 vision, with corrective lenses if necessary.

1.4.5 Crack in Film Coating

A "crack" in the film coating shall be defined as an opening in the coating which exposes the bare conductor to view.

1.4.6 Sudden Jerk (Rapid Elongation)

"Sudden jerk" shall be defined as an elongation rate of approximately 10 to 12 feet (3.0 to 3.6 meters) per second.

1.4.7 Mandrels

Mandrel diameters are expressed as multiples of "d" (the nominal round bare wire diameter or thickness or width of rectangular and square bare wires). The mandrel diameter shall be expressed in decimal fractions to the nearest 0.1 mil (0.0001 in.) (0.0025 mm).

For diameters finer than 30 AWG (0.0100 in.) (0.254 mm), the mandrel diameter shall not vary from the specified diameter by more than ± 0.1 mil (0.0001 in.) (0.0025 mm). For diameters equal to or larger than 30 AWG, the mandrel diameter shall not vary from the specified diameter by more than ± 1 percent as measured to the nearest 0.1 mil (0.0001 in.) (0.0025 mm).

Round wire test specimens shall be evenly wound in a closed helix around a mandrel and under sufficient tension to ensure a compact winding. Rectangular and square wire test specimens shall be bent around the mandrel perpendicular to the axis of the mandrel and under sufficient tension to ensure a uniform bend. Care shall be exercised not to introduce an axial twist in the wire. Any failures on the first and last turns of the round wire specimens shall be disregarded.

Copyright National Electrical Manufacturers Association
Provided by IHS under license with NEMA
No reproduction or networking permitted without license from IHS
Not for Resale

9009279 0001452 728

1.4.8 Wire Shapes

References to rectangular wire in the test procedures in Part 3 include square wire unless otherwise noted.

1.4.9 Round Bare Wire Size

1.4.9.1 The bare wire size given in Part 2 (Sizes 4 through 26 AWG) shall be permitted to be exceeded (see Table 1-11), provided:

1. the maximum diameter specified in Table 1-11 is not exceeded; and,
2. the minimum increase in diameter specified in Part 2 is maintained; and,
3. the maximum overall diameter specified in Part 2 is not exceeded.

1.4.9.2 Theoretical nominal bare wire diameters for 45 through 56 AWG copper wire are in accordance with ASTM B3. Conductor diameter tolerances in the applicable sections in Part 2 are shown as resistance values and shall be determined by measuring the resistance of the wire in accordance with ASTM B193.

1.4.10 Periodic Conformance

Periodic conformance tests are tests performed at extended intervals. This assures continuing levels of certain inherent characteristics of materials and processes.

1.4.11 Retests

Unless otherwise indicated in Parts 2 or 3, the test or tests under which a wire fails shall be repeated twice, and the wire shall be regarded as meeting the requirements of these standards if the results of both additional tests are satisfactory.

1.4.12 Use of Solvents

All organic solvents shall be used only in properly ventilated areas. Skin contact shall be avoided.

1.5 DIMENSIONS AND METRIC EQUIVALENTS

(This Section and its subparagraph are classified as Authorized Engineering Information.)

In these standards, units are expressed in the customary inch-pound system. Where their approximate metric equivalents are included, they are given as information only. Temperatures are given in degrees Celsius.

The tables of customary units and metric equivalents in Part 1 (Tables 1-1 through 1-14) list the range of AWG sizes used in Part 2.

1.5.1 Rounding Off Numerical Values

The practice of rounding off numerical values is in accordance with the ASTM E29.

1.6 DATA IN SUPPORT OF THERMAL CLASS FOR FILM-COATED MAGNET WIRE

The thermal class of magnet wire shall be based upon:

1. Relative thermal endurance in accordance with 3.58.1.1.
2. Heat shock capability as required in individual sections in Part 2. The heat shock capability shall be at least 20 °C higher than the class temperatures as required in individual sections in Part 2.

The thermal class given in each product section of Part 2 is the class of the magnet wire and is not intended to be the class of the electrical equipment in which the wire is used.

It is expected that the magnet wire producer will supply the user, upon request, with test data in support of the thermal class of the magnet wire offered as meeting the requirements of Part 2 of this publication.

These data should be given in such form as is in accord with the provisions of ASTM D2307.

The tests described in ASTM D2307 are considered as design tests on a given insulation composition. It is not intended that they will be performed as production tests or on individual shipments.

Aluminum magnet wire products usually exhibit different thermal endurance and heat shock properties in comparison with film-insulated copper magnet wire. This difference should be considered when assigning the thermal class to film-coated aluminum magnet wire.

(These last five paragraphs are classified as Authorized Engineering Information.)

1.50 ORDERING AND ENGINEERING INFORMATION

(This Section and all of its subparagraphs are classified as Authorized Engineering Information.)

1.50.1 Ordering Information

Orders for materials under these standards should include the following information:

1. Quantity: total number of pounds (kilograms).
2. Size:
   a. Round wire—American Wire Gauge (AWG) or equivalent diameter as a decimal dimension in inches or millimeters.
   b. Rectangular wire—preferred number thickness and width dimensions in decimal inches or millimeters.

Copyright National Electrical Manufacturers Association
Provided by IHS under license with NEMA
No reproduction or networking permitted without license from IHS
Not for Resale

9009279 0001453 664

3. Type of material:
   a. Conductor
   b. Insulating materials
      (1) Applicable MW section number from Part 2 of this standard.
      (2) Insulation thickness designation.
4. Packaging: size of spools, reels, or containers.

1.50.2 Preferred Number Series

The tables of dimensions for rectangular copper and aluminum wire (Tables 1-13 and 1-14) for the applicable sections in Part 2, are based on a series of standardized size subdivisions for thickness and width known as the "Preferred Number Series."

The series has been adopted by the International Electrotechnical Commission and has been incorporated into all standards for rectangular wires of both copper and aluminum in this publication.

Mathematically, the preferred numbers form a geometrical series (with a constant ratio between adjacent numbers) based on the 20th or 40th root of 10. The latter is called the R-40 Series and is assigned to intermediate width values for rectangular wire. The R-20 Series (with the 20th root of 10 as the ratio) is used to define preferred wire thickness and width divisions.

Preferred number series values in inches (rounded to nearest 0.001 inch) represent a conversion from original computations in millimeters.

1.50.3 Lubrication

A minimum amount of neutral lubricant consistent with good packaging and winding performance may be applied to the surface of film-coated wire.

1.50.4 Copper at Elevated Temperatures

Copper will oxidize at an increasing rate at temperatures of 200°C and above and will also pit and become brittle at such temperatures. This oxidation will eventually damage the coating, and failure of the winding may result. Where extended life is desirable at temperatures exceeding 200°C, it is advisable to protect the copper conductor with a material such as silver or nickel, provided the material is compatible with the coating or covering.

1.50.5 ASTM Test Conditions and Procedures for Film-coated Magnet Wire

A more complete description of equipment and operational steps of the test procedures may be found in Appendix A which references ASTM D1676, D2307, and D3353.

1.50.6 Comparison Between AWG and IEC R-40 Series

Table 1-15 illustrates the relationship between the metric sizes in millimeters based on the IEC R-40 Series and the AWG sizes converted to millimeters.

NOTE: The nominal AWG bare wire diameters, in inches, in Table 1-15 were calculated using the basic mathematical characteristics of the American Wire Gage:

$$X = (0.0050)\,(1.1229322)^{(36 - N)}$$

where: X = nominal bare wire diameter in inches

0.0050 = nominal diameter in inches for 36 AWG

1.1229322 = $\sqrt[39]{92}$ = the ratio of any diameter to the diameter of the next larger gage number

36 = the AWG number of the base diameter

N = the AWG number of X, the unknown diameter

For sizes 4/0 to 2/0 AWG , N is a negative number from −3 to −1.

Copyright National Electrical Manufacturers Association
Provided by IHS under license with NEMA
No reproduction or networking permitted without license from IHS
Not for Resale

Table 1-1
INCH AND METRIC EQUIVALENT DIMENSIONS FOR MAGNET WIRE
SINGLE BUILD, 14 TO 56 AWG

AWG Size	Bare Wire Diameter						Minimum Increase in Diameter†		Maximum Overall Diameter†		AWG Size
	Minimum		Nominal		Maximum						
	inches	mm	inches	mm	inches	mm	inches	mm	inches	mm	
14	0.0635	1.613	0.0641	1.628	0.0644*	1.636*	0.0016	0.041	0.0666	1.692	14
15	0.0565	1.435	0.0571	1.450	0.0574*	1.458	0.0015	0.038	0.0594	1.509	15
16	0.0503	1.278	0.0508	1.290	0.0511*	1.298*	0.0014	0.036	0.0531	1.349	16
17	0.0448	1.138	0.0453	1.151	0.0455*	1.156*	0.0014	0.036	0.0475	1.206	17
18	0.0399	1.013	0.0403	1.024	0.0405*	1.029*	0.0013	0.033	0.0424	1.077	18
19	0.0355	0.902	0.0359	0.912	0.0361*	0.917*	0.0012	0.030	0.0379	0.963	19
20	0.0317	0.805	0.0320	0.813	0.0322*	0.818*	0.0012	0.030	0.0339	0.861	20
21	0.0282	0.716	0.0285	0.724	0.0286*	0.726*	0.0011	0.028	0.0303	0.770	21
22	0.0250	0.635	0.0253	0.643	0.0254*	0.645*	0.0011	0.028	0.0270	0.686	22
23	0.0224	0.569	0.0226	0.574	0.0227*	0.577*	0.0010	0.025	0.0243	0.617	23
24	0.0199	0.505	0.0201	0.511	0.0202*	0.513*	0.0010	0.025	0.0217	0.551	24
25	0.0177	0.450	0.0179	0.455	0.0180*	0.457*	0.0009	0.023	0.0194	0.493	25
26	0.0157	0.399	0.0159	0.404	0.0160*	0.406*	0.0009	0.023	0.0173	0.439	26
27	0.0141	0.358	0.0142	0.361	0.0143	0.363	0.0008	0.020	0.0156	0.396	27
28	0.0125	0.318	0.0126	0.320	0.0127	0.323	0.0008	0.020	0.0140	0.356	28
29	0.0112	0.284	0.0113	0.287	0.0114	0.290	0.0007	0.018	0.0126	0.320	29
30	0.0099	0.251	0.0100	0.254	0.0101	0.256	0.0007	0.018	0.0112	0.284	30
31	0.0088	0.224	0.0089	0.226	0.0090	0.229	0.0006	0.015	0.0100	0.254	31
32	0.0079	0.201	0.0080	0.203	0.0081	0.206	0.0006	0.015	0.0091	0.231	32
33	0.0070	0.178	0.0071	0.180	0.0072	0.183	0.0005	0.013	0.0081	0.206	33
34	0.0062	0.157	0.0063	0.160	0.0064	0.163	0.0005	0.013	0.0072	0.183	34
35	0.0055	0.140	0.0056	0.142	0.0057	0.145	0.0004	0.010	0.0064	0.163	35
36	0.0049	0.124	0.0050	0.127	0.0051	0.130	0.0004	0.010	0.0058	0.147	36
37	0.0044	0.112	0.0045	0.114	0.0046	0.117	0.0003	0.008	0.0052	0.132	37
38	0.0039	0.099	0.0040	0.102	0.0041	0.104	0.0003	0.008	0.0047	0.119	38
39	0.0034	0.086	0.0035	0.089	0.0036	0.091	0.0002	0.005	0.0041	0.104	39
40	0.0030	0.076	0.0031	0.079	0.0032	0.081	0.0002	0.005	0.0037	0.094	40
41	0.0027	0.069	0.0028	0.071	0.0029	0.074	0.0002	0.005	0.0033	0.084	41
42	0.0024	0.061	0.0025	0.064	0.0026	0.066	0.0002	0.005	0.0030	0.076	42
43	0.0021	0.053	0.0022	0.056	0.0023	0.058	0.0002	0.005	0.0026	0.066	43
44	0.0019	0.048	0.0020	0.051	0.0021	0.053	0.0001	0.0025	0.0024	0.061	44
			Theoretical Nominal Bare Wire Diameter‡								
			inches	mm							
45			0.00176	0.0447			0.00010	0.0025	0.00205	0.0521	45
46			0.00157	0.0399			0.00010	0.0025	0.00185	0.0470	46
47			0.00140	0.0356			0.00010	0.0025	0.00170	0.0432	47
48			0.00124	0.0315			0.00010	0.0025	0.00150	0.0381	48
49			0.00111	0.0282			0.00010	0.0025	0.00130	0.0330	49
50			0.00099	0.0251			0.00010	0.0025	0.00120	0.0305	50
51			0.00088	0.0224			0.00010	0.0025	0.00110	0.0279	51
52			0.00078	0.0198			0.00010	0.0025	0.00100	0.0254	52
53			0.00070	0.0178			0.00005	0.0013	0.00085	0.0216	53
54			0.00062	0.0157			0.00005	0.0013	0.00075	0.0190	54
55			0.00055	0.0140			0.00005	0.0013	0.00070	0.0178	55
56			0.00049	0.0124			0.00005	0.0013	0.00065	0.0165	56

*This bare wire diameter shall be permitted to be exceeded; see 1.4.9.1.
†The values in these columns do not apply to MW 1-C in Part 2.
‡Theoretical nominal bare wire diameter by resistance; see 1.4.9.2. See Table 1-12 for resistance metric equivalents.

Copyright National Electrical Manufacturers Association
Provided by IHS under license with NEMA
No reproduction or networking permitted without license from IHS Not for Resale

Table 1-2
DECIMAL INCH AND METRIC EQUIVALENT DIMENSIONS FOR MAGNET WIRE HEAVY BUILD, 4 TO 50 AWG

AWG Size	Bare Wire Diameter						Minimum Increase in Diameter		Maximum Overall Diameter		AWG Size
	Minimum		Nominal		Maximum						
	inches	mm	inches	mm	inches	mm	inches	mm	inches	mm	
4	0.2023	5.138	0.2043	5.189	0.2053*	5.215*	0.0037	0.094	0.2098	5.329	4
5	0.1801	4.575	0.1819	4.620	0.1828*	4.643*	0.0036	0.091	0.1872	4.755	5
6	0.1604	4.074	0.1620	4.115	0.1628*	4.135*	0.0035	0.089	0.1671	4.244	6
7	0.1429	3.630	0.1443	3.665	0.1450*	3.683*	0.0034	0.086	0.1491	3.787	7
8	0.1272	3.231	0.1285	3.264	0.1292*	3.282*	0.0033	0.084	0.1332	3.383	8
9	0.1133	2.878	0.1144	2.906	0.1150*	2.921*	0.0032	0.081	0.1189	3.020	9
10	0.1009	2.563	0.1019	2.588	0.1024*	2.601*	0.0031	0.079	0.1061	2.695	10
11	0.0898	2.281	0.0907	2.304	0.0912*	2.316*	0.0030	0.076	0.0948	2.408	11
12	0.0800	2.032	0.0808	2.052	0.0812*	2.062*	0.0029	0.074	0.0847	2.151	12
13	0.0713	1.811	0.0720	1.829	0.0724*	1.839*	0.0028	0.071	0.0757	1.923	13
14	0.0635	1.613	0.0641	1.628	0.0644*	1.636*	0.0032	0.081	0.0682	1.732	14
15	0.0565	1.435	0.0571	1.450	0.0574*	1.458*	0.0030	0.076	0.0609	1.547	15
16	0.0503	1.278	0.0508	1.290	0.0511*	1.298*	0.0029	0.074	0.0545	1.384	16
17	0.0448	1.138	0.0453	1.151	0.0455*	1.156*	0.0028	0.071	0.0488	1.240	17
18	0.0399	1.013	0.0403	1.024	0.0405*	1.029*	0.0026	0.066	0.0437	1.110	18
19	0.0355	0.902	0.0359	0.912	0.0361*	0.917*	0.0025	0.064	0.0391	0.993	19
20	0.0317	0.805	0.0320	0.813	0.0322*	0.818*	0.0023	0.058	0.0351	0.892	20
21	0.0282	0.716	0.0285	0.724	0.0286*	0.726*	0.0022	0.056	0.0314	0.798	21
22	0.0250	0.635	0.0253	0.643	0.0254*	0.645*	0.0021	0.053	0.0281	0.714	22
23	0.0224	0.569	0.0226	0.574	0.0227*	0.577*	0.0020	0.051	0.0253	0.643	23
24	0.0199	0.505	0.0201	0.511	0.0202*	0.513*	0.0019	0.048	0.0227	0.577	24
25	0.0177	0.450	0.0179	0.455	0.0180*	0.457*	0.0018	0.046	0.0203	0.516	25
26	0.0157	0.399	0.0159	0.404	0.0160*	0.406*	0.0017	0.043	0.0182	0.462	26
27	0.0141	0.358	0.0142	0.361	0.0143	0.363	0.0016	0.041	0.0164	0.417	27
28	0.0125	0.318	0.0126	0.320	0.0127	0.323	0.0016	0.041	0.0147	0.373	28
29	0.0112	0.284	0.0113	0.287	0.0114	0.290	0.0015	0.038	0.0133	0.338	29
30	0.0099	0.251	0.0100	0.254	0.0101	0.257	0.0014	0.036	0.0119	0.302	30
31	0.0088	0.224	0.0089	0.226	0.0090	0.299	0.0013	0.033	0.0108	0.274	31
32	0.0079	0.201	0.0080	0.203	0.0081	0.206	0.0012	0.030	0.0098	0.249	32
33	0.0070	0.178	0.0071	0.180	0.0072	0.183	0.0011	0.028	0.0088	0.224	33
34	0.0062	0.157	0.0063	0.160	0.0064	0.163	0.0010	0.025	0.0078	0.198	34
35	0.0055	0.140	0.0056	0.142	0.0057	0.145	0.0009	0.023	0.0070	0.178	35
36	0.0049	0.124	0.0050	0.127	0.0051	0.130	0.0008	0.020	0.0063	0.160	36
37	0.0044	0.112	0.0045	0.114	0.0046	0.117	0.0008	0.020	0.0057	0.145	37
38	0.0039	0.099	0.0040	0.102	0.0041	0.104	0.0007	0.018	0.0051	0.130	38
39	0.0034	0.086	0.0035	0.089	0.0036	0.091	0.0006	0.015	0.0045	0.114	39
40	0.0030	0.076	0.0031	0.079	0.0032	0.081	0.0006	0.015	0.0040	0.102	40
41	0.0027	0.069	0.0028	0.071	0.0029	0.074	0.0005	0.013	0.0036	0.091	41
42	0.0024	0.061	0.0025	0.064	0.0026	0.066	0.0004	0.010	0.0032	0.081	42
43	0.0021	0.053	0.0022	0.056	0.0023	0.058	0.0004	0.010	0.0029	0.074	43
44	0.0019	0.048	0.0020	0.051	0.0021	0.053	0.0004	0.010	0.0027	0.069	44
			Theoretical Nominal Bare Wire Diameter‡								
			inches	mm							
45			0.00176	0.0447			0.0003	0.0076	0.0023	0.0584	45
46			0.00157	0.0399			0.0003	0.0076	0.0021	0.0533	46
47			0.00140	0.0356			0.0003	0.0076	0.0019	0.0483	47
48			0.00124	0.0315			0.0002	0.0051	0.0017	0.0432	48
49			0.00111	0.0282			0.0002	0.0051	0.0015	0.0381	49
50			0.00099	0.0251			0.0002	0.0051	0.0014	0.0356	50

*This bare wire diameter shall be permitted to be exceeded; see 1.4.9.1.

‡Theoretical nominal bare wire diameter by resistance; see 1.4.9.2. See Table 1-1[illegible] for resistance metric equivalents.

Copyright National Electrical Manufacturers Association
Provided by IHS under license with NEMA
No reproduction or networking permitted without license from IHS
Not for Resale

9009279 0001456 373

Table 1-3
INCH AND METRIC EQUIVALENT DIMENSIONS FOR MAGNET WIRE TRIPLE BUILD, 14 TO 30 AWG

AWG Size	Bare Wire Diameter						Minimum Increase in Diameter		Maximum Overall Diameter		AWG Size
	Minimum		Nominal		Maximum						
	inches	mm	inches	mm	inches	mm	inches	mm	inches	mm	
14	0.0635	1.613	0.0641	1.628	0.0644*	1.636*	0.0048	0.122	0.0700	1.778	14
15	0.0565	1.435	0.0571	1.450	0.0574*	1.458*	0.0045	0.114	0.0627	1.593	15
16	0.0503	1.278	0.0508	1.290	0.0511*	1.298*	0.0043	0.109	0.0562	1.427	16
17	0.0448	1.138	0.0453	1.151	0.0455*	1.156*	0.0041	0.104	0.0504	1.280	17
18	0.0399	1.013	0.0403	1.024	0.0405*	1.029*	0.0039	0.099	0.0452	1.148	18
19	0.0355	0.902	0.0359	0.912	0.0361*	0.917*	0.0037	0.094	0.0406	1.031	19
20	0.0317	0.805	0.0320	0.813	0.0322*	0.818*	0.0035	0.089	0.0364	0.925	20
21	0.0282	0.716	0.0285	0.724	0.0286*	0.726*	0.0033	0.084	0.0326	0.828	21
22	0.0250	0.635	0.0253	0.643	0.0254*	0.645*	0.0032	0.081	0.0293	0.744	22
23	0.0224	0.569	0.0226	0.574	0.0227*	0.577*	0.0030	0.076	0.0264	0.671	23
24	0.0199	0.505	0.0201	0.511	0.0202*	0.513*	0.0029	0.074	0.0238	0.605	24
25	0.0177	0.450	0.0179	0.455	0.0180*	0.457*	0.0027	0.069	0.0214	0.544	25
26	0.0157	0.399	0.0159	0.404	0.0160*	0.406*	0.0026	0.066	0.0193	0.490	26
27	0.0141	0.358	0.0142	0.361	0.0143	0.363	0.0024	0.061	0.0173	0.439	27
28	0.0125	0.318	0.0126	0.320	0.0127	0.323	0.0023	0.058	0.0156	0.396	28
29	0.0112	0.284	0.0113	0.287	0.0114	0.290	0.0022	0.056	0.0142	0.361	[redacted]
30	0.0099	0.251	0.0100	0.254	0.0101	0.257	0.0021	0.053	0.0128	0.325	[redacted]

*This bare wire diameter shall be permitted to be exceeded; see 1.4.9.1.

Copyright National Electrical Manufacturers Association
Provided by IHS under license with NEMA
No reproduction or networking permitted without license from IHS
Not for Resale

Table 1-4
INCH AND METRIC EQUIVALENT DIMENSIONS FOR MAGNET WIRE
TYPE 1 SELF-BONDING WIRE, 14 TO 52 AWG

AWG Size	Bare Wire Diameter						Minimum Increase in Diameter				Maximum Overall Diameter		AWG Size
	Minimum		Nominal		Maximum		Film Coating		Thermoplastic Coating				
	inches	mm	inches	mm	inches	mm	inches	mm	inches	mm	inches	mm	
14	0.0635	1.613	0.0641	1.628	0.0644*	1.636*	0.0016	0.041	0.0006	0.015	0.0682	1.732	14
15	0.0565	1.435	0.0571	1.450	0.0574*	1.458*	0.0015	0.038	0.0006	0.015	0.0609	1.547	15
16	0.0503	1.278	0.0508	1.290	0.0511*	1.298*	0.0014	0.036	0.0006	0.015	0.0545	1.384	16
17	0.0448	1.138	0.0453	1.151	0.0455*	1.156*	0.0014	0.036	0.0006	0.015	0.0488	1.240	17
18	0.0399	1.013	0.0403	1.024	0.0405*	1.029*	0.0013	0.033	0.0006	0.015	0.0437	1.110	18
19	0.0355	0.902	0.0359	0.912	0.0361*	0.917*	0.0012	0.030	0.0006	0.015	0.0391	0.993	19
20	0.0317	0.805	0.0320	0.813	0.0322*	0.818*	0.0012	0.030	0.0005	0.013	0.0351	0.892	20
21	0.0282	0.716	0.0285	0.724	0.0286*	0.726*	0.0011	0.028	0.0005	0.013	0.0314	0.798	21
22	0.0250	0.635	0.0253	0.643	0.0254*	0.645*	0.0011	0.028	0.0005	0.013	0.0281	0.714	22
23	0.0224	0.569	0.0226	0.574	0.0227*	0.577*	0.0010	0.025	0.0005	0.013	0.0253	0.643	23
24	0.0199	0.505	0.0201	0.511	0.0202*	0.513*	0.0010	0.025	0.0005	0.013	0.0227	0.577	24
25	0.0177	0.450	0.0179	0.455	0.0180*	0.457*	0.0009	0.023	0.0005	0.013	0.0203	0.516	25
26	0.0157	0.399	0.0159	0.404	0.0160*	0.406*	0.0009	0.023	0.0005	0.013	0.0182	0.462	26
27	0.0141	0.358	0.0142	0.361	0.0143	0.363	0.0008	0.020	0.0005	0.013	0.0164	0.417	27
28	0.0125	0.318	0.0126	0.320	0.0127	0.323	0.0008	0.020	0.0005	0.013	0.0147	0.373	28
29	0.0112	0.284	0.0113	0.287	0.0114	0.290	0.0007	0.018	0.0004	0.010	0.0133	0.338	29
30	0.0099	0.251	0.0100	0.254	0.0101	0.257	0.0007	0.018	0.0004	0.010	0.0119	0.302	30
31	0.0088	0.224	0.0089	0.226	0.0090	0.229	0.0006	0.015	0.0004	0.010	0.0108	0.274	31
32	0.0079	0.201	0.0080	0.203	0.0081	0.206	0.0006	0.015	0.0004	0.010	0.0098	0.249	32
33	0.0070	0.178	0.0071	0.180	0.0072	0.183	0.0005	0.013	0.0004	0.010	0.0088	0.224	33
34	0.0062	0.157	0.0063	0.160	0.0064	0.163	0.0005	0.013	0.0003	0.008	0.0078	0.198	34
35	0.0055	0.140	0.0056	0.142	0.0057	0.145	0.0004	0.010	0.0003	0.008	0.0070	0.178	35
36	0.0049	0.124	0.0050	0.127	0.0051	0.130	0.0004	0.010	0.0003	0.008	0.0063	0.160	36
37	0.0044	0.112	0.0045	0.114	0.0046	0.117	0.0003	0.008	0.0003	0.008	0.0057	0.145	37
38	0.0039	0.099	0.0040	0.102	0.0041	0.104	0.0003	0.008	0.0002	0.005	0.0051	0.130	38
39	0.0034	0.086	0.0035	0.089	0.0036	0.091	0.0002	0.005	0.0002	0.005	0.0045	0.114	39
40	0.0030	0.076	0.0031	0.079	0.0032	0.081	0.0002	0.005	0.0002	0.005	0.0040	0.102	40
41	0.0027	0.069	0.0028	0.071	0.0029	0.074	0.0002	0.005	0.0002	0.005	0.0036	0.091	41
42	0.0024	0.061	0.0025	0.064	0.0026	0.066	0.0002	0.005	0.0002	0.005	0.0032	0.081	42
43	0.0021	0.053	0.0022	0.056	0.0023	0.058	0.0002	0.005	0.0001	0.0025	0.0029	0.074	43
44	0.0019	0.048	0.0020	0.051	0.0021	0.053	0.0001	0.0025	0.0001	0.0025	0.0027	0.069	44
			Theoretical Nominal Bare Wire Diameter‡										
			inches	mm									
45			0.00176	0.0447			0.0001	0.0025	0.0001	0.0025	0.0023	0.0584	45
46			0.00157	0.0399			0.0001	0.0025	0.0001	0.0025	0.0021	0.0533	46
47			0.00140	0.0356			0.0001	0.0025	0.0001	0.0025	0.0019	0.0483	47
48			0.00124	0.0315			0.0001	0.0025	0.0001	0.0025	0.0017	0.0432	48
49			0.00111	0.0282			0.0001	0.0025	0.0001	0.0025	0.0015	0.0381	49
50			0.00099	0.0251			0.0001	0.0025	0.0001	0.0025	0.0014	0.0356	50
51			0.00088	0.0224			0.0001	0.0025	0.0001	0.0025	0.0013	0.0330	51
52			0.00078	0.0198			0.0001	0.0025	0.00005	0.0013	0.00115	0.0292	52

*This bare wire diameter shall be permitted to be exceeded; see 1.4.9.1.
‡Theoretical nominal bare wire diameter by resistance; see 1.4.9.2. See Table 1-12 for resistance metric equivalents.

Copyright National Electrical Manufacturers Association
Provided by IHS under license with NEMA
No reproduction or networking permitted without license from IHS
Not for Resale

9009279 0001458 146

Table 1-5
INCH AND METRIC EQUIVALENT DIMENSIONS FOR MAGNET WIRE
TYPE 2 SELF-BONDING WIRE, 14 TO 50 AWG

AWG Size	Bare Wire Diameter						Minimum Increase in Diameter				Maximum Overall Diameter		AWG Size
	Minimum		Nominal		Maximum		Film Coating		Thermoplastic Coating				
	inches	mm	inches	mm	inches	mm	inches	mm	inches	mm	inches	mm	
14	0.0635	1.613	0.0641	1.628	0.0644*	1.636*	0.0032	0.081	0.0006	0.015	0.0700	1.778	14
15	0.0565	1.435	0.0571	1.450	0.0574*	1.458*	0.0030	0.076	0.0006	0.015	0.0627	1.593	15
16	0.0503	1.278	0.0508	1.290	0.0511*	1.298*	0.0029	0.074	0.0006	0.015	0.0562	1.427	16
17	0.0448	1.138	0.0453	1.151	0.0455*	1.156*	0.0028	0.071	0.0006	0.015	0.0504	1.280	17
18	0.0399	1.013	0.0403	1.024	0.0405*	1.029*	0.0026	0.066	0.0006	0.015	0.0452	1.148	18
19	0.0355	0.902	0.0359	0.912	0.0361*	0.917*	0.0025	0.064	0.0006	0.015	0.0406	1.031	19
20	0.0317	0.805	0.0320	0.813	0.0322*	0.818*	0.0023	0.058	0.0005	0.013	0.0364	0.925	20
21	0.0282	0.716	0.0285	0.724	0.0286*	0.726*	0.0022	0.056	0.0005	0.013	0.0326	0.828	21
22	0.0250	0.635	0.0253	0.643	0.0254*	0.645*	0.0021	0.053	0.0005	0.013	0.0293	0.744	22
23	0.0224	0.569	0.0226	0.574	0.0227*	0.577*	0.0020	0.051	0.0005	0.013	0.0264	0.671	23
24	0.0199	0.505	0.0201	0.511	0.0202*	0.513*	0.0019	0.048	0.0005	0.013	0.0238	0.605	24
25	0.0177	0.450	0.0179	0.455	0.0180*	0.457*	0.0018	0.046	0.0005	0.013	0.0214	0.544	25
26	0.0157	0.399	0.0159	0.404	0.0160*	0.406*	0.0017	0.043	0.0005	0.013	0.0193	0.490	26
27	0.0141	0.358	0.0142	0.361	0.0143	0.363	0.0016	0.041	0.0005	0.013	0.0173	0.439	27
28	0.0125	0.318	0.0126	0.320	0.0127	0.323	0.0016	0.041	0.0005	0.013	0.0156	0.396	28
29	0.0112	0.284	0.0113	0.287	0.0114	0.290	0.0015	0.038	0.0004	0.010	0.0142	0.361	29
30	0.0099	0.251	0.0100	0.254	0.0101	0.257	0.0014	0.036	0.0004	0.010	0.0128	0.325	30
31	0.0088	0.224	0.0089	0.266	0.0090	0.229	0.0013	0.033	0.0004	0.010	0.0115	0.292	31
32	0.0079	0.201	0.0080	0.203	0.0081	0.206	0.0012	0.030	0.0004	0.010	0.0105	0.267	32
33	0.0070	0.178	0.0071	0.180	0.0072	0.183	0.0011	0.028	0.0004	0.010	0.0095	0.241	33
34	0.0062	0.157	0.0063	0.160	0.0064	0.163	0.0010	0.025	0.0003	0.008	0.0084	0.213	34
35	0.0055	0.140	0.0056	0.142	0.0057	0.145	0.0009	0.023	0.0003	0.008	0.0076	0.193	35
36	0.0049	0.124	0.0050	0.127	0.0051	0.130	0.0008	0.020	0.0003	0.008	0.0069	0.175	36
37	0.0044	0.112	0.0045	0.114	0.0046	0.117	0.0008	0.020	0.0003	0.008	0.0062	0.157	37
38	0.0039	0.099	0.0040	0.102	0.0041	0.104	0.0007	0.018	0.0002	0.005	0.0056	0.142	38
39	0.0034	0.086	0.0035	0.089	0.0036	0.091	0.0006	0.015	0.0002	0.005	0.0050	0.127	39
40	0.0030	0.076	0.0031	0.079	0.0032	0.081	0.0006	0.015	0.0002	0.005	0.0044	0.112	40
41	0.0027	0.069	0.0028	0.071	0.0029	0.074	0.0005	0.013	0.0002	0.005	0.0040	0.102	41
42	0.0024	0.061	0.0025	0.064	0.0026	0.066	0.0004	0.010	0.0002	0.005	0.0037	0.094	42
43	0.0021	0.053	0.0022	0.056	0.0023	0.058	0.0004	0.010	0.0001	0.0025	0.0033	0.084	43
44	0.0019	0.048	0.0020	0.051	0.0021	0.053	0.0004	0.010	0.0001	0.0025	0.0030	0.076	44
			Theoretical Nominal Bare Wire Diameter ‡										
			inches	mm									
45			0.00176	0.0447			0.0003	0.0076	0.0001	0.0025	0.00255	0.0648	45
46			0.00157	0.0399			0.0003	0.0076	0.0001	0.0025	0.00235	0.0597	46
47			0.00140	0.0356			0.0003	0.0076	0.0001	0.0025	0.00210	0.0533	47
48			0.00124	0.0315			0.0002	0.0051	0.0001	0.0025	0.00185	0.0470	48
49			0.00111	0.0282			0.0002	0.0051	0.0001	0.0025	0.00170	0.0432	49
50			0.00099	0.0251			0.0002	0.0051	0.0001	0.0025	0.00160	0.0406	50

*This bare wire diameter shall be permitted to be exceeded; see 1.4.9.1.

‡Theoretical nominal bare wire diameter by resistance; see 1.4.9.2. See Table 1-12 for resistance metric equivalents.

Copyright National Electrical Manufacturers Association
Provided by IHS under license with NEMA
No reproduction or networking permitted without license from IHS
Not for Resale

Table 1-6
INCH AND METRIC EQUIVALENT DIMENSIONS FOR MAGNET WIRE
TYPE 3 SELF-BONDING WIRE, 16 TO 30 AWG

AWG Size	Bare Wire Diameter						Minimum Increase in Diameter				Maximum Overall Diameter		AWG Size
	Minimum		Nominal		Maximum		Film Coating		Thermoplastic Coating				
	inches	mm	inches	mm	inches	mm	inches	mm	inches	mm	inches	mm	
16	0.0503	1.278	0.0508	1.290	0.0511*	1.298*	0.0043	0.109	0.0006	0.015	0.0577	1.466	16
17	0.0448	1.138	0.0453	1.151	0.0455*	1.156*	0.0041	0.104	0.0006	0.015	0.0520	1.321	17
18	0.0399	1.013	0.0403	1.024	0.0405*	1.029*	0.0039	0.099	0.0006	0.015	0.0468	1.189	18
19	0.0355	0.902	0.0359	0.912	0.0361*	0.917*	0.0037	0.094	0.0006	0.015	0.0422	1.072	19
20	0.0317	0.805	0.0320	0.813	0.0322*	0.818*	0.0035	0.089	0.0005	0.013	0.0379	0.903	20
21	0.0282	0.716	0.0285	0.724	0.0286*	0.726*	0.0033	0.084	0.0005	0.013	0.0342	0.869	21
22	0.0250	0.635	0.0253	0.643	0.0254*	0.645	0.0032	0.081	0.0005	0.013	0.0308	0.782	22
23	0.0224	0.569	0.0226	0.574	0.0227*	0.577*	0.0030	0.076	0.0005	0.013	0.0279	0.709	23
24	0.0199	0.505	0.0201	0.511	0.0202*	0.513*	0.0029	0.074	0.0005	0.013	0.0252	0.640	24
25	0.0177	0.450	0.0179	0.455	0.0180*	0.457*	0.0027	0.069	0.0005	0.013	0.0228	0.579	25
26	0.0157	0.399	0.0159	0.404	0.0160*	0.406*	0.0026	0.066	0.0005	0.013	0.0206	0.523	26
27	0.0141	0.358	0.0142	0.361	0.0143	0.363	0.0024	0.061	0.0005	0.013	0.0185	0.470	27
28	0.0125	0.318	0.0126	0.320	0.0127	0.323	0.0023	0.058	0.0005	0.013	0.0166	0.422	28
29	0.0112	0.284	0.0113	0.287	0.0114	0.290	0.0022	0.056	0.0004	0.010	0.0152	0.386	29
30	0.0099	0.251	0.0100	0.254	0.0101	0.257	0.0021	0.053	0.0004	0.010	0.0137	0.348	30

*This bare wire diameter shall be permitted to be exceeded; see 1.4.9.1.

Copyright National Electrical Manufacturers Association
Provided by IHS under license with NEMA
No reproduction or networking permitted without license from IHS
Not for Resale

Copyright National Electrical Manufacturers Association
Provided by IHS under license with NEMA
No reproduction or networking permitted without license from IHS
Not for Resale

9009279 0001460 8T4

Table 1-7
INCH AND METRIC EQUIVALENT DIMENSIONS FOR MAGNET WIRE
SINGLE-GLASS-FIBER-COVERED ROUND BARE, SINGLE-FILM-COATED AND HEAVY-FILM-COATED WIRE

AWG Size	Bare Wire Diameter						Maximum Increase Single-glass-fiber Covering		Maximum Overall Diameter, Single-glass-fiber Covered						AWG Size
	Minimum		Nominal		Maximum				Bare		Single-Film		Heavy-Film		
	inches	mm	inches	mm	inches	mm	inches	mm	inches	mm	inches	mm	inches	mm	
4/0	0.4554	11.567	0.4600	11.684	0.4646	11.801	0.0045	0.114	0.4716	11.979	...	...	...	...	4/0
3/0	0.4055	10.300	0.4096	10.404	0.4137	10.508	0.0045	0.114	0.4207	10.686	...	...	...	...	3/0
2/0	0.3612	9.174	0.3648	9.266	0.3684	9.357	0.0045	0.114	0.3754	9.535	...	...	...	...	2/0
1/0	0.3217	8.171	0.3249	8.252	0.3281	8.334	0.0045	0.114	0.3351	8.512	...	...	...	...	1/0
1	0.2864	7.275	0.2893	7.348	0.2922	7.422	0.0045	0.114	0.2992	7.600	...	...	...	...	1
2	0.2550	6.477	0.2576	6.543	0.2602	6.609	0.0045	0.114	0.2672	6.787	...	...	...	...	2
3	0.2271	5.768	0.2294	5.827	0.2317	5.885	0.0045	0.114	0.2387	6.063	...	...	...	...	3
4	0.2023	5.138	0.2043	5.189	0.2053*	5.215*	0.0045	0.114	0.2133	5.418	...	...	0.2170	5.512	4
5	0.1801	4.575	0.1819	4.620	0.1828*	4.643*	0.0045	0.114	0.1907	4.844	...	...	0.1942	4.933	5
6	0.1604	4.074	0.1620	4.115	0.1628*	4.135*	0.0045	0.114	0.1706	4.333	...	...	0.1741	4.422	6
7	0.1429	3.630	0.1443	3.665	0.1450*	3.683*	0.0045	0.114	0.1527	3.879	...	...	0.1561	3.965	7
8	0.1272	3.231	0.1285	3.264	0.1292*	3.282*	0.0045	0.114	0.1368	3.475	...	...	0.1402	3.561	8
9	0.1133	2.878	0.1144	2.906	0.1150*	2.921*	0.0045	0.114	0.1225	3.112	...	...	0.1259	3.198	9
10	0.1009	2.563	0.1019	2.588	0.1024*	2.601*	0.0040	0.102	0.1089	2.766	...	...	0.1121	2.847	10
11	0.0898	2.281	0.0907	2.304	0.0912*	2.136*	0.0040	0.102	0.0976	2.479	...	...	0.1008	2.560	11
12	0.0800	2.032	0.0808	2.052	0.0812*	2.062*	0.0040	0.102	0.0876	2.225	...	...	0.0907	2.304	12
13	0.0713	1.811	0.0720	1.829	0.0724*	1.839*	0.0040	0.102	0.0787	1.999	...	...	0.0817	2.075	13
14	0.0635	1.613	0.0641	1.628	0.0644*	1.636*	0.0040	0.102	0.0707	1.796	0.0726	1.844	0.0742	1.885	14
15	0.0565	1.435	0.0571	1.450	0.0574*	1.458*	0.0040	0.102	0.0637	1.618	0.0654	1.661	0.0669	1.699	15
16	0.0503	1.278	0.0508	1.290	0.0511*	1.298*	0.0040	0.102	0.0573	1.455	0.0591	1.501	0.0605	1.537	16
17	0.0448	1.138	0.0453	1.151	0.0455*	1.156*	0.0040	0.102	0.0518	1.316	0.0535	1.359	0.0548	1.392	17
18	0.0399	1.013	0.0403	1.024	0.0405*	1.029*	0.0040	0.102	0.0467	1.186	0.0484	1.229	0.0497	1.262	18
19	0.0355	0.902	0.0359	0.912	0.0361*	0.917*	0.0040	0.102	0.0423	1.074	0.0439	1.115	0.0451	1.146	19
20	0.0317	0.805	0.0320	0.813	0.0322*	0.818*	0.0040	0.102	0.0383	0.973	0.0399	1.013	0.0411	1.044	20
21	0.0282	0.716	0.0285	0.724	0.0286*	0.726*	0.0040	0.102	0.0348	0.884	0.0363	0.922	0.0374	0.950	21
22	0.0250	0.635	0.0253	0.643	0.0254*	0.645*	0.0040	0.102	0.0316	0.803	0.0330	0.838	0.0341	0.866	22
23	0.0224	0.569	0.0226	0.574	0.0227*	0.577*	0.0040	0.102	0.0288	0.732	0.0303	0.770	0.0313	0.795	23
24	0.0199	0.505	0.0201	0.511	0.0202*	0.513*	0.0025	0.064	0.0243	0.617	0.0257	0.653	0.0267	0.678	24
25	0.0177	0.450	0.0179	0.455	0.0180*	0.457*	0.0025	0.064	0.0221	0.561	0.0234	0.594	0.0243	0.617	25
26	0.0157	0.399	0.0159	0.404	0.0160*	0.406*	0.0025	0.064	0.0201	0.511	0.0213	0.541	0.0222	0.564	26
27	0.0141	0.358	0.0142	0.361	0.0143	0.363	0.0025	0.064	0.0183	0.465	0.0196	0.498	0.0204	0.518	27
28	0.0125	0.318	0.0126	0.320	0.0127	0.323	0.0025	0.064	0.0167	0.424	0.0180	0.457	0.0187	0.475	28
29	0.0112	0.284	0.0113	0.287	0.0114	0.290	0.0025	0.064	0.0154	0.391	0.0166	0.422	0.0173	0.439	29
30	0.0099	0.251	0.0100	0.254	0.0101	0.257	0.0025	0.064	0.0141	0.358	0.0152	0.386	0.0159	0.404	30

*This bare wire diameter shall be permitted to be exceeded; see 1.4.9.1.

Copyright National Electrical Manufacturers Association
Provided by IHS under license with NEMA
No reproduction or networking permitted without license from IHS
Not for Resale

9009279 0001461 730

Table 1-B

INCH AND METRIC EQUIVALENT DIMENSIONS FOR MAGNET WIRE
DOUBLE-GLASS-FIBER-COVERED ROUND BARE, SINGLE-FILM-COATED AND HEAVY-FILM-COATED WIRE

AWG Size	Bare Wire Diameter						Maximum Increase Single-glass-fiber Covering		Maximum Overall Diameter, Single-glass-fiber Covered						AWG Size
	Minimum		Nominal		Maximum				Bare		Single-Film		Heavy-Film		
	inches	mm	inches	mm	inches	mm	inches	mm	inches	mm	inches	mm	inches	mm	
4/0	0.4554	11.567	0.4600	11.684	0.4646	11.801	0.0070	0.178	0.4756	12.080	...	...	...	...	4/0
3/0	0.4055	10.300	0.4096	10.404	0.4137	10.508	0.0070	0.178	0.4247	10.787	...	...	...	...	3/0
2/0	0.3612	9.174	0.3648	9.266	0.3684	9.357	0.0070	0.178	0.3794	9.637	...	...	...	...	2/0
1/0	0.3217	8.171	0.3249	8.252	0.3281	8.334	0.0070	0.178	0.3391	8.613	...	...	...	...	1/0
1	0.2864	7.275	0.2893	7.348	0.2922	7.422	0.0070	0.178	0.3032	7.701	...	...	...	...	1
2	0.2550	6.477	0.2576	6.543	0.2602	6.609	0.0070	0.178	0.2712	6.888	...	...	...	...	2
3	0.2271	5.769	0.2291	5.827	0.2317	5.885	0.0070	0.178	0.2427	6.165	...	...	...	...	3
4	0.2023	5.138	0.2043	5.189	0.2053*	5.215*	0.0070	0.178	0.2173	5.520	...	...	0.2210	5.613	4
5	0.1801	4.575	0.1819	4.620	0.1828*	4.643*	0.0070	0.178	0.1947	4.945	...	...	0.1982	5.034	5
6	0.1604	4.074	0.1620	4.115	0.1628*	4.135*	0.0070	0.178	0.1567	4.435	...	...	0.1781	4.524	6
7	0.1429	3.630	0.1443	3.665	0.1450*	3.683*	0.0070	0.178	0.1567	3.980	...	...	0.1601	4.067	7
8	0.1272	3.231	0.1285	3.264	0.1292*	3.282*	0.0070	0.178	0.1408	3.576	...	...	0.1442	3.663	8
9	0.1133	2.878	0.1144	2.906	0.1150*	2.921*	0.0070	0.178	0.1265	3.213	...	...	0.1299	3.299	9
10	0.1009	2.563	0.1019	2.588	0.1024*	2.601*	0.0060	0.152	0.1119	2.842	...	...	0.1151	2.924	10
11	0.0898	2.281	0.0907	2.304	0.0912*	2.316*	0.0060	0.152	0.1006	2.555	...	...	0.1038	2.637	11
12	0.0800	2.032	0.0808	2.052	0.0812*	2.062*	0.0060	0.152	0.0906	2.301	...	...	0.0937	2.380	12
13	0.0713	1.811	0.0720	1.829	0.0724*	1.839*	0.0060	0.152	0.0817	2.075	...	...	0.0847	2.151	13
14	0.0635	1.613	0.0641	1.628	0.0644*	1.636*	0.0060	0.152	0.0737	1.872	0.0756	1.920	0.0772	1.961	14
15	0.0565	1.435	0.0571	1.450	0.0574*	1.458*	0.0060	0.152	0.0667	1.694	0.0684	1.737	0.0699	1.775	15
16	0.0503	1.278	0.0508	1.290	0.0511*	1.298*	0.0060	0.152	0.0603	1.532	0.0621	1.577	0.0635	1.613	16
17	0.0448	1.138	0.0453	1.151	0.0455*	1.156*	0.0060	0.152	0.0548	1.392	0.0565	1.435	0.0578	1.468	17
18	0.0399	1.013	0.0403	1.024	0.0405*	1.029*	0.0060	0.152	0.0497	1.262	0.0514	1.306	0.0527	1.339	18
19	0.0355	0.902	0.0359	0.912	0.0361*	0.917*	0.0060	0.152	0.0435	1.151	0.0469	1.191	0.0481	1.222	19
20	0.0317	0.805	0.0320	0.813	0.0322*	0.818*	0.0060	0.152	0.0413	1.049	0.0429	1.090	0.0441	1.120	20
21	0.0282	0.716	0.0285	0.724	0.0286*	0.726*	0.0060	0.152	0.0378	0.960	0.0393	0.998	0.0404	1.026	21
22	0.0250	0.635	0.0253	0.643	0.0254*	0.645*	0.0060	0.152	0.0346	0.879	0.0360	0.914	0.0371	0.942	22
23	0.0224	0.569	0.0226	0.574	0.0227*	0.577*	0.0060	0.152	0.0318	0.808	0.0333	0.846	0.0343	0.871	23
24	0.0199	0.505	0.0201	0.511	0.0202*	0.513*	0.0045	0.114	0.0263	0.668	0.0277	0.704	0.0287	0.729	24
25	0.0177	0.450	0.0179	0.455	0.0180*	0.457*	0.0045	0.114	0.0241	0.612	0.0254	0.645	0.0263	0.668	25
26	0.0157	0.399	0.0159	0.404	0.0160*	0.406*	0.0045	0.114	0.0221	0.561	0.0233	0.592	0.0242	0.615	26
27	0.0141	0.358	0.0142	0.361	0.0143	0.363	0.0045	0.114	0.0203	0.516	0.0216	0.549	0.0224	0.569	27
28	0.0125	0.318	0.0126	0.320	0.0127	0.323	0.0045	0.114	0.0187	0.475	0.0200	0.508	0.0207	0.526	28
29	0.0112	0.284	0.0113	0.287	0.0114	0.290	0.0045	0.114	0.0174	0.442	0.0186	0.472	0.0193	0.490	29
30	0.0099	0.251	0.0100	0.254	0.0101	0.257	0.0045	0.114	0.0161	0.409	0.0172	0.437	0.0179	0.455	30

*This bare wire diameter shall be permitted to be exceeded; see 1.4.9.1.

Copyright National Electrical Manufacturers Association
Provided by IHS under license with NEMA
No reproduction or networking permitted without license from IHS
Not for Resale

9009279 0001462 677

Table 1-9
INCH AND METRIC EQUIVALENT DIMENSIONS FOR MAGNET WIRE
SINGLE-POLYESTER-GLASS-FIBER-COVERED ROUND BARE, SINGLE-FILM-COATED AND HEAVY-FILM-COATED WIRE

AWG Size	Bare Wire Diameter						Maximum Increase Single-polyester-glass-fiber Covering		Maximum Overall Diameter, Single-polyester-glass-fiber-covered						AWG Size
	Minimum		Nominal		Maximum				Bare		Single-Film		Heavy-Film		
	inches	mm	inches	mm	inches	mm	inches	mm	inches	mm	inches	mm	inches	mm	
4/0	0.4554	11.567	0.4600	11.684	0.4646	11.801	0.0040	0.102	0.4696	11.928	...	...	...	...	4/0
3/0	0.4055	10.300	0.4096	10.404	0.4137	10.508	0.0040	0.102	0.4187	10.635	...	...	...	...	3/0
2/0	0.3612	9.174	0.3648	9.266	0.3684	9.357	0.0040	0.102	0.3734	9.484	...	...	...	...	2/0
1/0	0.3217	8.171	0.3249	8.252	0.3281	8.334	0.0040	0.102	0.3331	8.461	...	...	...	...	1/0
1	0.2864	7.275	0.2893	7.348	0.2922	7.422	0.0040	0.102	0.2972	7.549	...	...	...	...	1
2	0.2550	6.477	0.2576	6.543	0.2602	6.609	0.0040	0.102	0.2652	6.736	...	...	...	...	2
3	0.2271	5.769	0.2291	5.827	0.2317	5.885	0.0040	0.102	0.2367	6.012	...	...	...	...	3
4	0.2023	5.138	0.2043	5.189	0.2053*	5.215*	0.0040	0.102	0.2123	5.392	...	...	0.2158	5.481	4
5	0.1801	4.575	0.1819	4.620	0.1828*	4.643*	0.0040	0.102	0.1897	4.818	...	...	0.1932	4.907	5
6	0.1604	4.074	0.1620	4.115	0.1628*	4.135*	0.0040	0.102	0.1696	4.308	...	...	0.1731	4.397	6
7	0.1429	3.630	0.1443	3.665	0.1450*	3.683*	0.0040	0.102	0.1517	3.853	...	...	0.1551	3.940	7
8	0.1272	3.231	0.1285	3.264	0.1292*	3.282*	0.0040	0.102	0.1358	3.449	...	...	0.1392	3.536	8
9	0.1133	2.878	0.1144	2.906	0.1150*	2.921*	0.0040	0.102	0.1215	3.086	...	...	0.1249	3.172	9
10	0.1009	2.563	0.1019	2.588	0.1024*	2.601*	0.0035	0.089	0.1079	2.741	...	...	0.1111	2.822	10
11	0.0898	2.281	0.0907	2.304	0.0912*	2.316*	0.0035	0.089	0.0966	2.454	...	...	0.0998	2.535	11
12	0.0800	2.032	0.0808	2.052	0.0812*	2.062*	0.0035	0.089	0.0866	2.200	...	...	0.0897	2.278	12
13	0.0713	1.811	0.0720	1.829	0.0724*	1.839*	0.0035	0.089	0.0777	1.974	...	...	0.0807	2.050	13
14	0.0635	1.613	0.0641	1.628	0.0644*	1.636*	0.0035	0.089	0.0697	1.770	0.0716	1.819	0.0732	1.859	14
15	0.0565	1.435	0.0571	1.450	0.0574*	1.458*	0.0035	0.089	0.0627	1.593	0.0644	1.639	0.0659	1.674	15
16	0.0503	1.278	0.0508	1.290	0.0511*	1.298*	0.0035	0.089	0.0563	1.430	0.0586	1.476	0.0595	1.511	16
17	0.0448	1.138	0.0453	1.151	0.0455*	1.156*	0.0035	0.089	0.0508	1.290	0.0525	1.334	0.0538	1.367	17
18	0.0399	1.013	0.0403	1.024	0.0405*	1.029*	0.0035	0.089	0.0457	1.161	0.0474	1.204	0.0487	1.237	18
19	0.0355	0.902	0.0359	0.912	0.0361*	0.917*	0.0035	0.089	0.0413	1.049	0.0429	1.090	0.0441	1.120	19
20	0.0217	0.805	0.0320	0.813	0.0322*	0.818*	0.0035	0.089	0.0373	0.947	0.0389	0.988	0.0401	1.019	20
21	0.0282	0.716	0.0285	0.724	0.0286*	0.726*	0.0035	0.089	0.0338	0.859	0.0353	0.897	0.0364	0.925	21
22	0.0250	0.635	0.0253	0.643	0.0254*	0.645*	0.0035	0.089	0.0306	0.777	0.0320	0.813	0.0331	0.841	22
23	0.0224	0.569	0.0226	0.574	0.0227*	0.577*	0.0035	0.089	0.0278	0.706	0.0293	0.744	0.0303	0.770	23
24	0.0199	0.505	0.0201	0.511	0.0202*	0.513*	0.0025	0.064	0.0253	0.643	0.0267	0.678	0.0277	0.704	24
25	0.0177	0.450	0.0179	0.455	0.0180*	0.457*	0.0025	0.064	0.0231	0.587	0.0244	0.620	0.0253	0.643	25
26	0.0157	0.399	0.0159	0.404	0.0160*	0.406*	0.0025	0.064	0.0211	0.536	0.0223	0.566	0.0232	0.589	26
27	0.0141	0.358	0.0142	0.361	0.0143	0.363	0.0025	0.064	0.0193	0.490	0.0206	0.523	0.0214	0.544	27
28	0.0125	0.318	0.0126	0.310	0.0127	0.323	0.0025	0.064	0.0177	0.450	0.0190	0.483	0.0197	0.500	28
29	0.0112	0.284	0.0113	0.287	0.0114	0.290	0.0025	0.064	0.0164	0.417	0.0176	0.447	0.0183	0.465	29
30	0.0099	0.251	0.0100	0.254	0.0101	0.257	0.0025	0.064	0.0151	0.384	0.0162	0.411	0.0169	0.429	30

*This bare wire diameter shall be permitted to be exceeded; see 1.4.9.1.

Copyright National Electrical Manufacturers Association
Provided by IHS under license with NEMA
No reproduction or networking permitted without license from IHS
Not for Resale

9009279 0001463 503

Table 1-10
INCH AND METRIC EQUIVALENT DIMENSIONS FOR MAGNET WIRE
DOUBLE-POLYESTER-GLASS-FIBER-COVERED ROUND BARE, SINGLE-FILM-COATED AND HEAVY-FILM-COATED WIRE

AWG Size	Bare Wire Diameter						Maximum Increase Double-polyester-glass-fiber Covering		Maximum Overall Diameter, Double-polyester-glass-fiber Covered						AWG Size
	Minimum		Nominal		Maximum				Bare		Single-Film		Heavy-film		
	inches	mm	inches	mm	inches	mm	inches	mm	inches	mm	inches	mm	inches	mm	
4/0	0.4554	11.567	0.4600	11.684	0.4646	11.801	0.0060	0.152	0.4736	12.029	...	...	...	...	4/0
3/0	0.4055	10.300	0.4096	10.404	0.4137	10.508	0.0060	0.152	0.4227	10.737	...	...	...	...	3/0
2/0	0.3612	9.174	0.3648	9.266	0.3684	9.357	0.0060	0.152	0.3774	9.586	...	...	...	...	2/0
1/0	0.3217	8.171	0.3249	8.252	0.3281	8.334	0.0060	0.152	0.3371	8.562	...	...	...	...	1/0
1	0.2864	7.275	0.2893	7.348	0.2922	7.422	0.0060	0.152	0.3012	7.650	...	...	...	...	1
2	0.2550	6.477	0.2576	6.543	0.2602	6.609	0.0060	0.152	0.2692	6.838	...	...	...	...	2
3	0.2271	5.769	0.2294	5.827	0.2317	5.885	0.0060	0.152	0.2407	6.114	...	...	...	...	3
4	0.2023	5.138	0.2043	5.189	0.2053*	5.215*	0.0060	0.152	0.2153	5.469	...	...	0.2188	5.558	4
5	0.1801	4.575	0.1819	4.620	0.1828*	4.643*	0.0060	0.152	0.1927	4.895	...	...	0.1962	4.983	5
6	0.1604	4.074	0.1620	4.115	0.1628*	4.135*	0.0060	0.152	0.1726	4.384	...	...	0.1761	4.473	6
7	0.1429	3.630	0.1443	3.665	0.1450*	3.683*	0.0060	0.152	0.1547	3.929	...	...	0.1581	4.016	7
8	0.1273	3.231	0.1285	3.264	0.1292*	3.282*	0.0060	0.152	0.1388	3.526	...	...	0.1422	3.612	8
9	0.1133	2.878	0.1144	2.906	0.1150*	2.921*	0.0060	0.152	0.1245	3.162	...	...	0.1279	3.249	9
10	0.1009	2.563	0.1019	2.588	0.1024*	2.601*	0.0055	0.140	0.1109	2.817	...	...	0.1141	2.898	10
11	0.0898	2.281	0.0907	2.304	0.0912*	2.316*	0.0055	0.140	0.0996	2.530	...	...	0.1028	2.611	11
12	0.0800	2.032	0.0808	2.052	0.0812*	2.062*	0.0055	0.140	0.0986	2.276	...	...	0.0927	2.355	12
13	0.0713	1.811	0.0720	1.829	0.0724*	1.839*	0.0055	0.140	0.0807	2.050	...	...	0.0837	2.126	13
14	0.0635	1.613	0.0641	1.628	0.0644*	1.636*	0.0055	0.895	0.0727	1.847	0.0746	1.895	0.0762	1.935	14
15	0.0565	1.435	0.0571	1.450	0.0574*	1.458*	0.0055	0.140	0.0657	1.669	0.0674	1.712	0.0689	1.750	15
16	0.0503	1.278	0.0508	1.290	0.0511*	1.298*	0.0055	0.140	0.0593	1.506	0.0611	1.552	0.0625	1.558	16
17	0.0448	1.138	0.0453	1.151	0.0455*	1.156*	0.0055	0.140	0.0538	1.367	0.0555	1.410	0.0568	1.443	17
18	0.0399	1.013	0.0403	1.024	0.0405*	1.029*	0.0055	0.140	0.0487	1.237	0.0504	1.280	0.0517	1.313	18
19	0.0355	0.902	0.0359	0.912	0.0361*	0.917*	0.0055	0.140	0.0443	1.125	0.0459	1.166	0.0471	1.196	19
20	0.0317	0.805	0.0320	0.813	0.0322*	0.818*	0.0055	0.140	0.0403	1.024	0.0419	1.064	0.0431	1.095	20
21	0.0282	0.716	0.0285	0.724	0.0286*	0.726	0.0055	0.140	0.0368	0.935	0.0383	0.973	0.0394	1.001	21
22	0.0250	0.635	0.0253	0.643	0.0254*	0.645*	0.0055	0.140	0.0336	0.853	0.0350	0.889	0.0361	0.917	22
23	0.0224	0.569	0.0226	0.574	0.0227*	0.577*	0.0055	0.140	0.0308	0.782	0.0323	0.820	0.0333	0.846	23
24	0.0199	0.505	0.0210	0.511	0.0202*	0.513*	0.0045	0.114	0.0268	0.681	0.0282	0.716	0.0292	0.742	24
25	0.0177	0.450	0.0179	0.455	0.0180*	0.457*	0.0045	0.114	0.0246	0.625	0.0259	0.658	0.0268	0.681	25
26	0.0157	0.399	0.0159	0.404	0.0160*	0.406*	0.0045	0.114	0.0226	0.574	0.0238	0.605	0.0247	0.627	26
27	0.0141	0.358	0.0142	0.361	0.0143	0.363	0.0045	0.114	0.0208	0.528	0.0221	0.561	0.0229	0.582	27
28	0.0125	0.318	0.0126	0.320	0.0127	0.323	0.0045	0.114	0.0192	0.488	0.0205	0.521	0.0212	0.538	28
29	0.0112	0.284	0.0113	0.287	0.0114	0.290	0.0045	0.114	0.0179	0.455	0.0191	0.485	0.0198	0.503	29
30	0.0099	0.251	0.0100	0.254	0.0101	0.257	0.0045	0.114	0.0166	0.422	0.0177	0.450	0.0184	0.467	30

*This bare wire diameter shall be permitted to be exceeded; see 1.4.9.1.

Table 1-11
MAXIMUM DIAMETERS FOR ROUND BARE WIRE 4 TO 26 AWG

AWG Size	Practical Maximum Diameter Given in Part 2		Full Maximum Diameter	
	inches	mm	inches	mm
4	0.2053	5.215	0.2063	5.240
5	0.1828	4.643	0.1837	4.666
6	0.1628	4.135	0.1636	4.155
7	0.1450	3.683	0.1457	3.701
8	0.1292	3.282	0.1298	3.297
9	0.1150	2.921	0.1155	2.934
10	0.1024	2.601	0.1029	2.614
11	0.0912	2.316	0.0916	2.327
12	0.0812	2.062	0.0816	2.073
13	0.0724	1.839	0.0727	1.847
14	0.0644	1.636	0.0647	1.643
15	0.0574	1.485	0.0577	1.466
16	0.0511	1.298	0.0513	1.303
17	0.0455	1.156	0.0458	1.163
18	0.0405	1.029	0.0407	1.034
19	0.0361	0.917	0.0363	0.922
20	0.0322	0.818	0.0323	0.820
21	0.0286	0.726	0.0288	0.731
22	0.0254	0.645	0.0256	0.650
23	0.0227	0.577	0.0228	0.579
24	0.0202	0.513	0.0203	0.516
25	0.0180	0.457	0.0181	0.460
26	0.0160	0.406	0.0161	0.409

NOTE—The sections in Part 2 which apply to round wire give the practical maximum bare wire diameters for sizes 4 through 26 AWG, based on using only half of the bare wire diameter plus tolerance. The tolerances used in the full maximum diameters given above are in accordance with ASTM B3. See 1.4.9.1 for the conditions which should be met for use in the full tolerance. (This NOTE is classified as Authorized Engineering Information.)

Table 1-12
ROUND BARE WIRE, FINE SIZES BY RESISTANCE

AWG Size	Ohms at 20° C						AWG Size
	Minimum		Nominal		Maximum		
	Per Foot	Per Meter	Per Foot	Per Meter	Per Foot	Per Meter	
45	3.080	10.105	3.348	10.984	3.616	11.864	45
46	3.870	12.697	4.207	13.802	4.544	14.908	46
47	4.868	15.971	5.291	17.359	5.714	18.747	47
48	6.205	20.358	6.745	22.129	7.285	23.901	48
49	7.744	25.407	8.417	27.615	9.090	29.823	49
50	9.734	31.936	10.58	34.711	11.43	37.500	50
51	12.32	40.420	13.39	43.930	14.46	47.441	51
52	15.69	51.476	17.05	55.938	18.41	60.400	52
53	19.48	63.911	21.17	69.455	22.86	75.000	53
54	24.82	81.430	26.98	88.517	29.14	95.604	54
55	31.54	103.477	34.28	112.467	37.02	121.457	55
56	39.73	130.348	43.19	141.699	46.64	153.018	56

Copyright National Electrical Manufacturers Association
Provided by IHS under license with NEMA
No reproduction or networking permitted without license from IHS
Not for Resale

Table 1-13
DIMENSIONS AND RADII FOR RECTANGULAR BARE WIRE

| Nominal Thickness | | Nominal Width | | |

Copyright National Electrical Manufacturers Association
Provided by IHS under license with NEMA
No reproduction or networking permitted without license from IHS
Not for Resale

9009279 0001466 212

Table 1-15
COMPARISON BETWEEN AWG AND IEC R-40 SERIES BARE WIRE DIAMETERS

AWG SIZE	AWG BARE WIRE DIAMETER						NOM. DIA. R-40 SERIES	NOM.** AWG AREA	NOM. R-40 SERIES AREA	%△†	
	MINIMUM		NOMINAL		MAXIMUM						
	inches	mm*	inches	mm*	inches	mm*	mm	mm²	mm²	NOM. DIA. R-40 to AWG	NOM. AREA R-40 to AWG
4	0.2023	5.138	0.2043	5.189	0.2053	5.215	5.000	21.149	19.635	−3.6	−7.2
4½	0.1909	4.849	0.1928	4.897	0.1938	4.923	4.750	18.835	17.721	−3.0	−5.9
5	0.1801	4.575	0.1819	4.620	0.1828	4.643	4.500	16.766	15.904	−2.6	−5.1
5½	0.1700	4.318	0.1717	4.361	0.1726	4.384	4.250	14.938	14.186	−2.5	−5.0
6	0.1604	4.074	0.1620	4.115	0.1628	4.135	4.000	13.298	12.566	−2.8	−5.5
6½	0.1514	3.846	0.1529	3.884	0.1537	3.904	3.750	11.846	11.045	−3.4	−6.8
7	0.1429	3.630	0.1443	3.665	0.1450	3.683	3.550	10.551	9.898	−3.1	−6.2
7½	0.1348	3.424	0.1362	3.459	0.1369	3.477	3.350	9.400	8.814	−3.2	−6.2
8	0.1272	3.231	0.1285	3.264	0.1291	3.279	3.150	8.367	7.793	−3.5	−6.9
8½	0.1201	3.051	0.1213	3.081	0.1219	3.096	3.000	7.456	7.069	−2.6	−5.2
9	0.1133	2.878	0.1144	2.906	0.1150	2.921	2.800	6.631	6.158	−3.6	−7.1
9½	0.1069	2.715	0.1080	2.743	0.1085	2.756	2.650	5.910	5.515	−3.4	−6.7
10	0.1009	2.563	0.1019	2.588	0.1024	2.601	2.500	5.261	4.909	−3.4	−6.7
10½	0.0952	2.418	0.0962	2.443	0.0967	2.456	2.360	4.689	4.374	−3.4	−6.7
11	0.0898	2.281	0.0907	2.304	0.0912	2.316	2.240	4.168	3.941	−2.8	−5.5
11½	0.0847	2.151	0.0856	2.174	0.0860	2.184	2.120	3.713	3.530	−2.5	−4.9
12	0.0800	2.032	0.0808	2.052	0.0812	2.062	2.000	3.308	3.142	−2.5	−5.0
12½	0.0755	1.918	0.0763	1.938	0.0767	1.948	1.900	2.950	2.835	−2.0	−3.9
13	0.0713	1.811	0.0720	1.829	0.0724	1.839	1.800	2.627	2.545	−1.6	−3.1
13½	0.0672	1.707	0.0679	1.725	0.0682	1.732	1.700	2.336	2.270	−1.4	−2.8
14	0.0635	1.613	0.0641	1.628	0.0644	1.636	1.600	2.082	2.011	−1.7	−3.4
14½	0.0599	1.521	0.0605	1.537	0.0608	1.544	1.500	1.855	1.767	−2.4	−4.7
15	0.0565	1.435	0.0571	1.450	0.0574	1.458	1.400	1.652	1.539	−3.5	−6.8
15½	0.0534	1.356	0.0539	1.369	0.0542	1.377	1.320	1.472	1.368	−3.6	−7.0
16	0.0503	1.278	0.0508	1.290	0.0511	1.298	1.250	1.308	1.227	−3.1	−6.2
16½	0.0475	1.207	0.0480	1.219	0.0482	1.224	1.180	1.167	1.094	−3.2	−6.3
17	0.0448	1.138	0.0453	1.151	0.0455	1.156	1.120	1.040	0.985	−2.7	−5.3
17½	0.0423	1.074	0.0427	1.085	0.0429	1.090	1.060	0.924	0.882	−2.3	−4.5
18	0.0399	1.013	0.0403	1.024	0.0405	1.029	1.000	0.823	0.785	−2.3	−4.6
18½	0.0376	0.955	0.0380	0.965	0.0382	0.970	0.950	0.732	0.709	−1.6	−3.1
19	0.0355	0.902	0.0359	0.912	0.0361	0.917	0.900	0.653	0.636	−1.3	−2.6
19½	0.0336	0.853	0.0339	0.861	0.0341	0.866	0.850	0.582	0.567	−1.3	−2.6
20	0.0317	0.805	0.0320	0.813	0.0322	0.818	0.800	0.519	0.503	−1.6	−3.1
20½	0.0299	0.759	0.0302	0.767	0.0304	0.772	0.750	0.462	0.442	−2.2	−4.4

*These diameters are rounded numbers calculated from the inch values.

**The nominal areas of AWG wires have been calculated in square inch units and then converted to square millimeters.

† The differences in diameter and area have been calculated from values more precise than those shown in the table.

Copyright National Electrical Manufacturers Association
Provided by IHS under license with NEMA
No reproduction or networking permitted without license from IHS
Not for Resale

9009279 0001467 159

Table 1-15 *(cont'd)*

AWG SIZE	AWG BARE WIRE DIAMETER						NOM. DIA. R-40 SERIES	NOM.** AWG AREA	NOM. R-40 SERIES AREA	%△†	
	MINIMUM		NOMINAL		MAXIMUM						
	inches	mm*	inches	mm*	inches	mm*	mm	mm²	mm²	NOM. DIA. R-40 to AWG	NOM. AREA R-40 to AWG
21	0.0282	0.716	0.0285	0.724	0.0286	0.726	0.710	0.412	0.396	−1.9	−3.8
21½	0.0266	0.676	0.0269	0.683	0.0270	0.686	0.670	0.367	0.353	−1.9	−3.8
22	0.0250	0.635	0.0253	0.643	0.0254	0.645	0.630	0.324	0.312	−2.0	−3.9
22½	0.0237	0.602	0.0239	0.607	0.0240	0.610	0.600	0.289	0.283	−1.2	−2.3
23	0.0224	0.569	0.0226	0.574	0.0227	0.577	0.560	0.259	0.246	−2.4	−4.8
23½	0.0211	0.536	0.0213	0.541	0.0214	0.544	0.530	0.230	0.221	−2.0	−4.0
24	0.0199	0.505	0.0201	0.511	0.0202	0.513	0.500	0.205	0.196	−2.1	−4.1
24½	0.0188	0.478	0.0190	0.483	0.0191	0.485	0.475	0.183	0.177	−1.6	−3.1
25	0.0177	0.450	0.0179	0.455	0.0180	0.457	0.450	0.162	0.159	−1.0	−2.0
25½	0.0167	0.424	0.0169	0.429	0.0170	0.432	0.425	0.145	0.142	−1.0	−2.0
26	0.0157	0.399	0.0159	0.404	0.0160	0.406	0.400	0.128	0.126	−1.0	−1.9
26½	0.0149	0.378	0.0150	0.381	0.0151	0.384	0.375	0.114	0.110	−1.6	−3.1
27	0.0141	0.358	0.0142	0.361	0.0143	0.363	0.355	0.102	0.0990	−1.6	−3.1
27½	0.0133	0.338	0.0134	0.340	0.0135	0.343	0.335	0.0910	0.0881	−1.6	−3.1
28	0.0125	0.318	0.0126	0.320	0.0127	0.323	0.315	0.0804	0.0779	−1.6	−3.1
28½	0.0118	0.300	0.0119	0.302	0.0120	0.305	0.300	0.0718	0.0707	−0.7	−1.5
29	0.0112	0.284	0.0113	0.287	0.0114	0.290	0.280	0.0647	0.0616	−2.4	−4.8
29½	0.0105	0.267	0.0106	0.269	0.0107	0.272	0.265	0.0569	0.0552	−1.6	−3.1
30	0.0099	0.251	0.0100	0.254	0.0101	0.257	0.250	0.0507	0.0491	−1.6	−3.1
30½	0.0094	0.239	0.0095	0.241	0.0096	0.244	0.236	0.0457	0.0437	−2.2	−4.3
31	0.0088	0.224	0.0089	0.226	0.0090	0.229	0.224	0.0401	0.0394	−0.9	−1.8
31½	0.0083	0.211	0.0084	0.213	0.0085	0.216	0.212	0.0358	0.0353	−0.6	−1.3
32	0.0079	0.201	0.0080	0.203	0.0081	0.206	0.200	0.0324	0.0314	−1.6	−3.1
32½	0.0074	0.188	0.0075	0.191	0.0076	0.193	0.190	0.0285	0.0284	−0.3	−0.5
33	0.0070	0.178	0.0071	0.180	0.0072	0.183	0.180	0.0255	0.0254	−0.2	−0.4
33½	0.0066	0.168	0.0067	0.170	0.0068	0.173	0.170	0.0227	0.0227	−0.1	−0.2
34	0.0062	0.157	0.0063	0.160	0.0064	0.163	0.160	0.0201	0.0201	.0	.0
34½	0.0058	0.147	0.0059	0.150	0.0060	0.152	0.150	0.0176	0.0177	0.1	0.2
35	0.0055	0.140	0.0056	0.142	0.0057	0.145	0.140	0.0159	0.0154	−1.6	−3.1
35½	0.0052	0.132	0.0053	0.135	0.0054	0.137	0.132	0.0142	0.0137	−1.9	−3.9
36	0.0049	0.124	0.0050	0.127	0.0051	0.130	0.125	0.0127	0.0123	−1.6	−3.1
36½	0.0046	0.117	0.0047	0.119	0.0048	0.122	0.118	0.0112	0.0109	−1.2	−2.3

*These diameters are rounded numbers calculated from the inch values.

**The nominal areas of AWG wires have been calculated in square inch units and then converted to square millimeters.

† The differences in diameter and area have been calculated from values more precise than those shown in the table.

9009279 0001468 095

Table 1-15 *(cont'd)*

AWG SIZE	AWG BARE WIRE DIAMETER						NOM. DIA. R-40 SERIES	NOM.** AWG AREA	NOM. R-40 SERIES AREA	%△†	
	MINIMUM		NOMINAL		MAXIMUM					NOM. DIA. R-40 to AWG	NOM. AREA R-40 to AWG
	inches	mm*	inches	mm*	inches	mm*	mm	mm²	mm²		
37	0.0044	0.112	0.0045	0.114	0.0046	0.117	0.112	0.0103	0.00985	−2.0	−4.0
37½	0.0041	0.104	0.0042	0.107	0.0043	0.109	0.106	0.00894	0.00882	−0.6	−1.3
38	0.0039	0.099	0.0040	0.102	0.0041	0.104	0.100	0.00811	0.00785	−1.6	−3.1
38½	0.0036	0.091	0.0037	0.094	0.0038	0.097	0.095	0.00694	0.00709	1.1	2.2
39	0.0034	0.086	0.0035	0.089	0.0036	0.091	0.090	0.00621	0.00636	1.2	2.5
39½	0.0032	0.081	0.0033	0.084	0.0034	0.086	0.085	0.00552	0.00567	1.4	2.8
40	0.0030	0.076	0.0031	0.079	0.0032	0.081	0.080	0.00487	0.00503	1.6	3.2
40½	0.0029	0.074	0.0030	0.076	0.0031	0.079	0.075	0.00456	0.00442	−1.6	−3.1
41	0.0027	0.069	0.0028	0.071	0.0029	0.074	0.071	0.00397	0.00396	−0.2	−0.3
41½	0.0025	0.064	0.0026	0.066	0.0027	0.069	0.067	0.00343	0.00353	1.5	2.9
42	0.0024	0.061	0.0025	0.064	0.0026	0.066	0.063	0.00317	0.00312	−0.8	−1.6
42½	0.0023	0.058	0.0024	0.061	0.0025	0.064	0.060	0.00292	0.00283	−1.6	−3.1
43	0.0021	0.053	0.0022	0.056	0.0023	0.058	0.056	0.00245	0.00246	0.2	0.4
43½	0.0020	0.051	0.0021	0.053	0.0022	0.056	0.053	0.00223	0.00221	−0.6	−1.3
44	0.0019	0.048	0.0020	0.051	0.0021	0.053	0.050	0.00203	0.00196	−1.6	−3.1
44½	0.0018	0.046	0.0019	0.048	0.0020	0.051	0.0475	0.00183	0.00177	−1.6	−3.1

*These diameters are rounded numbers calculated from the inch values.

**The nominal areas of AWG wires have been calculated in square inches and then converted to square millimeters.

†The differences in diameter and area have been calculated from values more precise than those shown in the table.

Copyright National Electrical Manufacturers Association
Provided by IHS under license with NEMA
No reproduction or networking permitted without license from IHS
Not for Resale

9009279 0001469 T21

Section 2
PROPERTIES AND REQUIREMENTS

2.1 PROPERTIES AND REQUIREMENTS

All properties and requirements for magnet wire contained in Part 2 shall be as shown in the following specification sheets.

Copyright National Electrical Manufacturers Association
Provided by IHS under license with NEMA
No reproduction or networking permitted without license from IHS
Not for Resale

OLEORESINOUS, SINGLE ENAMELLED ROUND COPPER MAGNET WIRE THERMAL CLASS 105

INSULATING MATERIALS. The coating is based on oil-modified natural or synthetic resins (1.2.2.2).

THERMAL CLASS. 105 °C when tested in accordance with Part 1, para. 1.6 and Part 3, para. 3.58.1.1.

GENERAL REQUIREMENTS. See Part 1.

Characteristics	Test Procedure, See Part 3, Paragraph	Requirements
1. DIMENSIONS	3.1.1.1	See Table S (MW 1-C)
2. ADHERENCE AND FLEXIBILITY	3.2.1.1.1	No cracks visible in the film coating
3. ELONGATION	3.3.1.1	Not less than value in Table S (MW 1-C)
6. SPRINGBACK	3.6.1.1	Not greater than value in Table S (MW 1-C)
7. DIELECTRIC STRENGTH	3.7.1.1	Not less than value in Table S (MW 1-C)
8. CONTINUITY	3.8.1.1	The number of discontinuities shall not exceed 25 when tested in accordance with the following: 25–30 AWG para. 3.8.1.1.1 31–44 AWG para. 3.8.1.1.1 or 3.8.1.1.2
PERIODIC CONFORMANCE TESTS		
50. THERMOPLASTIC FLOW	3.50.1.1	Median not less than 180 °C with film coated 36 AWG
51. SOLUBILITY	3.51.1.1	A specimen of film coated 36 AWG immersed in VM&P naptha shall not soften sufficiently to expose the bare conductor. Petroleum naptha boiling range shall be 93 °C to 155 °C with a Kauri-Butanol value not in excess of 40
52. DIELECTRIC STRENGTH AT RATED TEMPERATURE	3.52.1.1	Average not less than 900 volts with single film coated 36 AWG

Copyright National Electrical Manufacturers Association
Provided by IHS under license with NEMA
No reproduction or networking permitted without license from IHS
Not for Resale

9009279 0001471 68T

OLEORESINOUS, SINGLE ENAMELLED ROUND COPPER MAGNET WIRE, THERMAL CLASS 105

Table S (MW 1-C)

AWG Size	Bare Wire Diameter, Inches†			Insulation				Elongation, Minimum Percent	Springback, Maximum Degrees per Turn	Dielectric Strength, Minimum Breakdown Volts	AWG Size
				Minimum Increase in Diameter		Maximum Overall Diameter					
	Minimum	Nominal	Maximum	inches	mm	inches	mm				
25	0.0177	0.0179	0.0180 *	0.0009	0.023	0.0194	0.493	28	72	2625	25
26	0.0157	0.0159	0.0160 *	0.0008	0.020	0.0173	0.439	27	76	2550	26
27	0.0141	0.0142	0.0143	0.0008	0.020	0.0156	0.396	27	50	2500	27
28	0.0125	0.0126	0.0127	0.0007	0.018	0.0139	0.353	26	55	2425	28
29	0.0112	0.0113	0.0114	0.0007	0.018	0.0126	0.320	26	61	2375	29
30	0.0099	0.0100	0.0101	0.0006	0.015	0.0112	0.284	25	66	2300	30
31	0.0088	0.0089	0.0090	0.0006	0.015	0.0099	0.251	24	..	2075	31
32	0.0079	0.0080	0.0081	0.0006	0.015	0.0090	0.229	24	..	1850	32
33	0.0070	0.0071	0.0072	0.0005	0.013	0.0080	0.203	23	..	1675	33
34	0.0062	0.0063	0.0064	0.0005	0.013	0.0071	0.180	22	..	1500	34
35	0.0055	0.0056	0.0057	0.0004	0.010	0.0063	0.160	21	..	1325	35
36	0.0049	0.0050	0.0051	0.0004	0.010	0.0057	0.145	20	..	1200	36
37	0.0044	0.0045	0.0046	0.0003	0.008	0.0051	0.130	20	..	1075	37
38	0.0039	0.0040	0.0041	0.0003	0.008	0.0046	0.117	19	..	950	38
39	0.0034	0.0035	0.0036	0.0002	0.005	0.0040	0.102	18	..	850	39
40	0.0030	0.0031	0.0032	0.0002	0.005	0.0036	0.091	17	..	775	40
41	0.0027	0.0028	0.0029	0.0002	0.005	0.0032	0.081	17	..	700	41
42	0.0024	0.0025	0.0026	0.0002	0.005	0.0029	0.074	16	..	625	42
43	0.0021	0.0022	0.0023	0.00015	0.0038	0.0025	0.064	15	..	550	43
44	0.0019	0.0020	0.0021	0.0001	0.003	0.0023	0.058	14	..	500	44

*This maximum bare wire diameter shall be permitted to be exceeded; see 1.4.9.1.
†For metric equivalent, see 1.5.
NOTE: For direct conversion inches to millimeters, multiply inches by the factor 25.4 (exact). (This note approved as Authorized Engineering Information 3-11-1987.)

Copyright National Electrical Manufacturers Association
Provided by IHS under license with NEMA
No reproduction or networking permitted without license from IHS
Not for Resale

POLYURETHANE, SINGLE ENAMELLED ROUND COPPER MAGNET WIRE FOR SOLDERABLE APPLICATIONS THERMAL CLASS 105

INSULATING MATERIALS. The coating is based on polyurethane resins (1.2.2.2).

THERMAL CLASS. 105 °C when tested in accordance with Part 1, para. 1.6 and Part 3, para. 3.58.1.1.

GENERAL REQUIREMENTS. See Part 1.

Characteristics	Test Procedure, See Part 3, Paragraph	Requirements
1. DIMENSIONS	3.1.1.1	See Table S (MW 2-C)
2. ADHERENCE AND FLEXIBILITY	3.2.1.1	No cracks visible in the film coating
3. ELONGATION	3.3.1.1	Not less than value in Table S (MW 2-C)
4. HEAT SHOCK	3.4.1.1	No cracks visible in the film coating after conditioning at 150 °C; exception—use a 6d mandrel for all sizes
6. SPRINGBACK	3.6.1.1	Not greater than value in Table S (MW 2-C)
7. DIELECTRIC STRENGTH	3.7.1.1	Not less than value in Table S (MW 2-C)
8. CONTINUITY	3.8.1.1	The number of discontinuities shall not exceed 25 when tested in accordance with the following: 25–30 AWG para. 3.8.1.1.1 31–44 AWG para. 3.8.1.1.1 or 3.8.1.1.2 45–56 AWG para. 3.8.1.1.2
12. SOLDERABILITY	3.12.1.1	Covered with continuous film of solder after immersion at 360 °C for the time specified below: 25–29 AWG 6 seconds 30–36 AWG 5 seconds 37–46 AWG 4 seconds 47–56 AWG 3 seconds
PERIODIC CONFORMANCE TESTS		
50. THERMOPLASTIC FLOW	3.50.1.1	Median not less than 170 °C with heavy film coated 36 AWG
51. SOLUBILITY	3.51.1.1	A specimen of heavy film coated 36 AWG immersed in xylene shall not soften sufficiently to expose the bare conductor
52. DIELECTRIC STRENGTH AT RATED TEMPERATURE	3.52.1.1	Average not less than 1900 volts with heavy film coated 36 AWG
59. SCRAPE RESISTANCE	3.59.1.1	Lowest "grams-to-fail" load for any one of the three tests and the average of the three tests shall be not less than the values in Table S (MW 2-C)

Copyright National Electrical Manufacturers Association
Provided by IHS under license with NEMA
No reproduction or networking permitted without license from IHS
Not for Resale

9009279 0001473 452

POLYURETHANE, SINGLE ENAMELLED ROUND COPPER MAGNET WIRE FOR SOLDERABLE APPLICATIONS THERMAL CLASS 105

Table S (MW 2-C)

AWG Size	Bare Wire Diameter, Inches† Minimum	Nominal	Maximum	Insulation† Minimum Increase in Diameter, Inches	Maximum Overall Diameter, Inches	Elongation, Minimum Percent	Scrape, Grams to Fail Average	Minimum	Springback, Maximum Degrees per Turn	Dielectric Strength, Minimum Breakdown Volts	AWG Size
25	0.0177	0.0179	0.0180	0.0009	0.0194	28	350	300	72	2625	25
26	0.0157	0.0159	0.0160	0.0009	0.0173	27	330	280	76	2550	26
27	0.0141	0.0142	0.0143	0.0008	0.0156	27	310	265	50	2500	27
28	0.0125	0.0126	0.0127	0.0008	0.0140	26	290	250	55	2425	28
29	0.0112	0.0113	0.0114	0.0007	0.0126	26	270	230	61	2375	29
30	0.0099	0.0100	0.0101	0.0007	0.0112	25	255	220	66	2300	30
31	0.0088	0.0089	0.0090	0.0006	0.0100	24	...	...	..	2075	31
32	0.0079	0.0080	0.0081	0.0006	0.0091	24	...	...	..	1850	32
33	0.0070	0.0071	0.0072	0.0005	0.0081	23	...	...	..	1675	33
34	0.0062	0.0063	0.0064	0.0005	0.0072	22	...	...	..	1500	34
35	0.0055	0.0056	0.0057	0.0004	0.0064	21	...	...	..	1325	35
36	0.0049	0.0050	0.0051	0.0004	0.0058	20	...	...	..	1200	36
37	0.0044	0.0045	0.0046	0.0003	0.0052	20	...	...	..	1075	37
38	0.0039	0.0040	0.0041	0.0003	0.0047	19	...	...	..	950	38
39	0.0034	0.0035	0.0036	0.0002	0.0041	18	...	...	..	850	39
40	0.0030	0.0031	0.0032	0.0002	0.0037	17	...	...	..	775	40
41	0.0027	0.0028	0.0029	0.0002	0.0033	17	...	...	..	700	41
42	0.0024	0.0025	0.0026	0.0002	0.0030	16	...	...	..	625	42
43	0.0021	0.0022	0.0023	0.0002	0.0026	15	...	...	..	550	43
44	0.0019	0.0020	0.0021	0.0001	0.0024	14	...	...	..	500	44

AWG Size	Conductor Resistance at 20°C, Ohms per Foot †, ‡ Minimum	Nominal	Maximum	Insulation† Minimum Increase in Diameter, Inches	Maximum Overall Diameter, Inches	Elongation, Minimum Percent	Theoretical Nominal Bare Wire Diameter, Inches †, ‡	AWG Size
45	3.080	3.348	3.616	0.00010	0.00205	11	0.00176	45
46	3.870	4.207	4.544	0.00010	0.00185	10	0.00157	46
47	4.868	5.291	5.714	0.00010	0.00170	8	0.00140	47
48	6.205	6.745	7.285	0.00010	0.00150	7	0.00124	48
49	7.744	8.417	9.090	0.00010	0.00130	6	0.00111	49
50	9.734	10.58	11.43	0.00010	0.00120	5	0.00099	50
51	12.32	13.39	14.46	0.00010	0.00110	..	0.00088	51
52	15.69	17.05	18.41	0.00010	0.00100	..	0.00078	52
53	19.48	21.17	22.86	0.00005	0.00085	..	0.00070	53
54	24.82	26.98	29.14	0.00005	0.00075	..	0.00062	54
55	31.54	34.28	37.02	0.00005	0.00070	..	0.00055	55
56	39.73	43.19	46.65	0.00005	0.00065	..	0.00049	56

*This maximum bare wire diameter shall be permitted to be exceeded; see 1.4.9.1.
†For metric equivalent, see 1.5.
‡Conductor size tolerance based on resistance; see 1.4.9.2.
NOTE: For direct conversion inches to millimeters, multiply inches by the factor 25.4 (exact). (This note approved as Authorized Engineering Information 3-11-1987.)

Copyright National Electrical Manufacturers Association
Provided by IHS under license with NEMA
No reproduction or networking permitted without license from IHS
Not for Resale

9009279 0001474 399

POLYURETHANE, HEAVY
ENAMELLED ROUND COPPER MAGNET WIRE FOR SOLDERABLE APPLICATIONS
THERMAL CLASS 105

INSULATING MATERIALS. The coating is based on polyurethane resins (1.2.2.2).

THERMAL CLASS. 105°C when tested in accordance with Part 1, para. 1.6 and Part 3, para. 3.58.1.1.

GENERAL REQUIREMENTS. See Part 1.

Characteristics	Test Procedure, See Part 3, Paragraph	Requirements
1. DIMENSIONS	3.1.1.1	See Table H (MW 2-C)
2. ADHERENCE AND FLEXIBILITY	3.2.1.1	No cracks visible in the film coating
3. ELONGATION	3.3.1.1	Not less than value in Table H (MW 2-C)
4. HEAT SHOCK	3.4.1.1	No cracks visible in the film coating after conditioning at 150°C; exception—use a 6d mandrel for all sizes
6. SPRINGBACK	3.6.1.1	Not greater than value in Table H (MW 2-C)
7. DIELECTRIC STRENGTH	3.7.1.1	Not less than value in Table H (MW 2-C)
8. CONTINUITY	3.8.1.1	The number of discontinuities shall not exceed 7 for 25–30 AWG, 5 for 31–46 AWG, or 10 for 47–50 AWG, when tested in accordance with the following: 25–30 AWG para. 3.8.1.1.1 31–44 AWG para. 3.8.1.1.1 or 3.8.1.1.2 45–50 AWG para. 3.8.1.1.2
12. SOLDERABILITY	3.12.1.1	Covered with continuous film of solder after immersion at 360° for the time specified below: 25–29 AWG 6 seconds 30–36 AWG 5 seconds 37–46 AWG 4 seconds 47–50 AWG 3 seconds

PERIODIC CONFORMANCE TESTS

50. THERMOPLASTIC FLOW	3.50.1.1	Median not less than 170°C with heavy film coated 36 AWG
51. SOLUBILITY	3.51.1.1	A specimen of heavy film coated 36 AWG immersed in xylene shall not soften sufficiently to expose the bare conductor
52. DIELECTRIC STRENGTH AT RATED TEMPERATURE	3.52.1.1	Average not less than 1900 volts with heavy film coated 36 AWG
59. SCRAPE RESISTANCE	3.59.1.1	Lowest "grams-to-fail" load for any one of the three tests and the average of the three tests shall be not less than the values in Table H (MW 2-C)

Copyright National Electrical Manufacturers Association
Provided by IHS under license with NEMA
No reproduction or networking permitted without license from IHS
Not for Resale

9009279 0001475 225

POLYURETHANE, HEAVY ENAMELLED ROUND COPPER MAGNET WIRE FOR SOLDERABLE APPLICATIONS THERMAL CLASS 105

Table H (MW 2-C)

AWG Size	Bare Wire Diameter, Inches† Minimum	Nominal	Maximum	Insulation† Minimum Increase in Diameter, Inches	Maximum Overall Diameter, Inches	Elongation, Minimum Percent	Scrape, Grams to Fail Average	Minimum	Springback, Maximum Degrees per Turn	Dielectric Strength, Minimum Breakdown Volts	AWG Size
25	0.0177	0.0179	0.0180*	0.0018	0.0203	28	720	615	72	4725	25
26	0.0157	0.0159	0.0160*	0.0017	0.0182	27	675	575	76	4600	26
27	0.0141	0.0142	0.0143	0.0016	0.0164	27	635	540	50	4500	27
28	0.0125	0.0126	0.0127	0.0016	0.0147	26	595	510	55	4375	28
29	0.0112	0.0113	0.0114	0.0015	0.0133	26	560	480	61	4250	29
30	0.0099	0.0100	0.0101	0.0014	0.0119	25	525	450	66	4150	30
31	0.0088	0.0089	0.0090	0.0013	0.0108	24	...	...	..	3825	31
32	0.0079	0.0080	0.0081	0.0012	0.0098	24	...	...	..	3525	32
33	0.0070	0.0071	0.0072	0.0011	0.0088	23	...	...	..	3250	33
34	0.0062	0.0063	0.0064	0.0010	0.0078	22	...	...	..	2975	34
35	0.0055	0.0056	0.0057	0.0009	0.0070	21	...	...	..	2750	35
36	0.0049	0.0050	0.0051	0.0008	0.0063	20	...	...	..	2525	36
37	0.0044	0.0045	0.0046	0.0008	0.0057	20	...	...	..	2325	37
38	0.0039	0.0040	0.0041	0.0007	0.0051	19	...	...	..	2150	38
39	0.0034	0.0035	0.0036	0.0006	0.0045	18	...	...	..	1975	39
40	0.0030	0.0031	0.0032	0.0006	0.0040	17	...	...	..	1800	40
41	0.0027	0.0028	0.0029	0.0005	0.0036	17	...	...	..	1675	41
42	0.0024	0.0025	0.0026	0.0004	0.0032	16	...	...	..	1525	42
43	0.0021	0.0022	0.0023	0.0004	0.0029	15	...	...	..	1400	43
44	0.0019	0.0020	0.0021	0.0004	0.0027	14	...	...	..	1300	44
	Conductor Resistance at 20°C, Ohms per Foot †, ‡ Minimum	Nominal	Maximum				Theoretical Nominal Bare Wire Diameter, Inches †, ‡				
45	3.080	3.348	3.616	0.00030	0.00230	11	0.00176				45
46	3.870	4.207	4.544	0.00030	0.00210	10	0.00157				46
47	4.868	5.291	5.714	0.00030	0.00190	8	0.00140				47
48	6.205	6.745	7.285	0.00020	0.00170	7	0.00124				48
49	7.744	8.417	9.090	0.00020	0.00150	6	0.00111				49
50	9.734	10.58	11.43	0.00020	0.00140	5	0.00099				50

*This maximum bare wire diameter shall be permitted to be exceeded; see 1.4.9.1.
†For metric equivalent, see 1.5.
‡Conductor size tolerance based on resistance; see 1.4.9.2.
NOTE: For direct conversion inches to millimeters, multiply inches by the factor 25.4 (exact). (This note approved as Authorized Engineering Information 3-11-1987.)

Copyright National Electrical Manufacturers Association
Provided by IHS under license with NEMA
No reproduction or networking permitted without license from IHS
Not for Resale

9009279 0001476 161

POLYURETHANE WITH SELF-BONDING OVERCOAT, TYPE 1 ENAMELLED ROUND COPPER MAGNET WIRE FOR SOLDERABLE APPLICATIONS THERMAL CLASS 105

INSULATING MATERIALS. The conductor shall be coated with a dual film. The underlying coating is based on polyurethane resins (1.2.2.2). The superimposed coating is based on thermoplastic polyvinyl acetal resins (1.2.2.2).

THERMAL CLASS. 105°C when tested in accordance with Part 1, para. 1.6 and Part 3, para. 3.58.1.1.

GENERAL REQUIREMENTS. See Part 1.

Characteristics	Test Procedure, See Part 3, Paragraph	Requirements
1. DIMENSIONS	3.1.1.1.1	See Table T1 (MW 3-C)
2. ADHERENCE AND FLEXIBILITY	3.2.1.1	No cracks visible in the film coating
3. ELONGATION	3.3.1.1	Not less than value in Table T1 (MW 3-C)
4. HEAT SHOCK	3.4.1.1	No cracks visible in the film coating after conditioning at 150°C; exception—use a 6d mandrel for all sizes
6. SPRINGBACK	3.6.1.1	Not greater than value in Table T1 (MW 3-C)
7. DIELECTRIC STRENGTH	3.7.1.1	Not less than value in Table T1 (MW 3-C)
8. CONTINUITY	3.8.1.1	The number of discontinuities shall not exceed 25 when tested in accordance with the following: 25–30 AWG para. 3.8.1.1.1 31–44 AWG para. 3.8.1.1.1 or 3.8.1.1.2 45–52 AWG para. 3.8.1.1.2
12. SOLDERABILITY	3.12.1.1	Covered with continuous film of solder after immersion as follows: 25–29 AWG 6 seconds 30–36 AWG 5 seconds 37–46 AWG 4 seconds 47–52 AWG 3 seconds

PERIODIC CONFORMANCE TESTS

50. THERMOPLASTIC FLOW	3.50.1.1	Median not less than 170°C with Type 2 film coated 36 AWG
51. SOLUBILITY	3.51.1.1	A specimen of Type 2 film coated 36 AWG immersed in xylene shall not soften sufficiently to expose the bare conductor
52. DIELECTRIC STRENGTH AT RATED TEMPERATURE	3.52.1.1	Average not less than 1900 volts with Type 2 film coated 36 AWG
57. BOND	3.57.1.1	No separation of turns with Type 2 film coated 26 and 36 AWG

Copyright National Electrical Manufacturers Association
Provided by IHS under license with NEMA
No reproduction or networking permitted without license from IHS
Not for Resale

9009279 0001477 0T8

POLYURETHANE WITH SELF-BONDING OVERCOAT, TYPE 1
ENAMELLED ROUND COPPER MAGNET WIRE FOR SOLDERABLE APPLICATIONS
THERMAL CLASS 105
Table T1 (MW 3-C)

AWG Size	Bare Wire Diameter, Inches † Minimum	Nominal	Maximum	Insulation † Minimum Increase in Diameter, Inches Film Coating	Outer Coating	Maximum Overall Diameter, Inches	Elongation, Minimum Percent	Springback, Maximum Degrees per Turn	Dielectric Strength, Minimum Breakdown Volts	AWG Size
25	0.0177	0.0179	0.0180*	0.0009	0.0005	0.0203	28	72	2625	25
26	0.0157	0.0159	0.0160*	0.0009	0.0005	0.0182	27	76	2550	26
27	0.0141	0.0142	0.0143	0.0008	0.0005	0.0164	27	50	2500	27
28	0.0125	0.0126	0.0127	0.0008	0.0005	0.0147	26	55	2425	28
29	0.0112	0.0113	0.0114	0.0007	0.0004	0.0133	26	61	2375	29
30	0.0099	0.0100	0.0101	0.0007	0.0004	0.0119	25	66	2300	30
31	0.0088	0.0089	0.0090	0.0006	0.0004	0.0108	24	..	2075	31
32	0.0079	0.0080	0.0081	0.0006	0.0004	0.0098	24	..	1850	32
33	0.0070	0.0071	0.0072	0.0005	0.0004	0.0088	23	..	1675	33
34	0.0062	0.0063	0.0064	0.0005	0.0003	0.0078	22	..	1500	34
35	0.0055	0.0056	0.0057	0.0004	0.0003	0.0070	21	..	1325	35
36	0.0049	0.0050	0.0051	0.0004	0.0003	0.0063	20	..	1200	36
37	0.0044	0.0045	0.0046	0.0003	0.0003	0.0057	20	..	1075	37
38	0.0039	0.0040	0.0041	0.0003	0.0002	0.0051	19	..	950	38
39	0.0034	0.0035	0.0036	0.0002	0.0002	0.0045	18	..	850	39
40	0.0030	0.0031	0.0032	0.0002	0.0002	0.0040	17	..	775	40
41	0.0027	0.0028	0.0029	0.0002	0.0002	0.0036	17	..	700	41
42	0.0024	0.0025	0.0026	0.0002	0.0002	0.0032	16	..	625	42
43	0.0021	0.0022	0.0023	0.0002	0.0001	0.0029	15	..	550	43
44	0.0019	0.0020	0.0021	0.0001	0.0001	0.0027	14	..	500	44
	Conductor Resistance at 20°C, Ohms per Foot †, ‡ Minimum	Nominal	Maximum					Theoretical Nominal Bare Wire Diameter, Inches †, ‡		
45	3.080	3.348	3.616	0.0001	0.0001	0.0023	11	0.00176		45
46	3.870	4.207	4.544	0.0001	0.0001	0.0021	10	0.00157		46
47	4.868	5.291	5.714	0.0001	0.0001	0.0019	8	0.00140		47
48	6.205	6.745	7.285	0.0001	0.0001	0.0017	7	0.00124		48
49	7.744	8.417	9.090	0.0001	0.0001	0.0015	6	0.00111		49
50	9.734	10.58	11.43	0.0001	0.0001	0.0014	5	0.00099		50
51	12.32	13.39	14.46	0.0001	0.0001	0.0013	..	0.00088		51
52	15.69	17.05	18.41	0.0001	0.00005	0.00115	..	0.00078		52

*This maximum bare wire diameter shall be permitted to be exceeded; see 1.4.9.1.
†For metric equivalent, see 1.5.
‡Conductor size tolerance based on resistance; see 1.4.9.2.
NOTE. For direct conversion inches to millimeters, multiply inches by the factor 25.4 (exact). (This note approved as Authorized Engineering Information 3-11-1987.)

Copyright National Electrical Manufacturers Association
Provided by IHS under license with NEMA
No reproduction or networking permitted without license from IHS
Not for Resale

9009279 0001478 T34

POLYURETHANE WITH SELF-BONDING OVERCOAT, TYPE 2 ENAMELLED ROUND COPPER MAGNET WIRE FOR SOLDERABLE APPLICATIONS THERMAL CLASS 105

INSULATING MATERIALS. The conductor shall be coated with a dual film. The underlying coating is based on polyurethane resins (1.2.2.2). The superimposed coating is based on thermoplastic polyvinyl acetal resins (1.2.2.2).

THERMAL CLASS. 105°C when tested in accordance with Part 1, para. 1.6 and Part 3, para. 3.58.1.1.

GENERAL REQUIREMENTS. See Part 1.

Characteristics	Test Procedure, See Part 3, Paragraph	Requirements
1. DIMENSIONS	3.1.1.1.1	See Table T2 (MW 3-C)
2. ADHERENCE AND FLEXIBILITY	3.2.1.1	No cracks visible in the film coating
3. ELONGATION	3.3.1.1	Not less than value in Table T2 (MW 3-C)
4. HEAT SHOCK	3.4.1.1	No cracks visible in the film coating after conditioning at 150°C; exception—use a 6d mandrel for all sizes
6. SPRINGBACK	3.6.1.1	Not greater than value in Table T2 (MW 3-C)
7. DIELECTRIC STRENGTH	3.7.1.1	Not less than value in Table T2 (MW 3-C)
8. CONTINUITY	3.8.1.1	The number of discontinuities shall not exceed 7 for 25–30 AWG, 5 for 31–46 AWG, or 10 for 47–50 AWG, when tested in accordance with the following: 25–30 AWG para. 3.8.1.1.1 31–44 AWG para. 3.8.1.1.1 or 3.8.1.1.2 45–50 AWG para. 3.8.1.1.2
12. SOLDERABILITY	3.12.1.1	Covered with continuous film of solder after immersion at 360°C for the time specified below: 25–29 AWG 6 seconds 30–36 AWG 5 seconds 37–46 AWG 4 seconds 47–50 AWG 3 seconds

PERIODIC CONFORMANCE TESTS

50. THERMOPLASTIC FLOW	3.50.1.1	Median not less than 170°C with Type 2 film coated 36 AWG
51. SOLUBILITY	3.51.1.1	A specimen of Type 2 film coated 36 AWG immersed in xylene shall not soften sufficiently to expose the bare conductor
52. DIELECTRIC STRENGTH AT RATED TEMPERATURE	3.52.1.1	Average not less than 1900 volts with Type 2 film coated 36 AWG
57. BOND	3.57.1.1	No separation of turns with Type 2 film coated 26 and 36 AWG

Copyright National Electrical Manufacturers Association
Provided by IHS under license with NEMA
No reproduction or networking permitted without license from IHS
Not for Resale

POLYURETHANE WITH SELF-BONDING OVERCOAT, TYPE 2
ENAMELLED ROUND COPPER MAGNET WIRE FOR SOLDERABLE APPLICATIONS
THERMAL CLASS 105
Table T2 (MW 3-C)

AWG Size	Bare Wire Diameter, Inches †			Insulation †: Minimum Increase in Diameter, Inches		Insulation †: Maximum Overall Diameter, Inches	Elongation, Minimum Percent	Springback, Maximum Degrees per Turn	Dielectric Strength, Minimum Breakdown Volts	AWG Size
	Minimum	Nominal	Maximum	Film Coating	Outer Coating					
25	0.0177	0.0179	0.0180 *	0.0018	0.0005	0.0214	28	74	4725	25
26	0.0157	0.0159	0.0160 *	0.0017	0.0005	0.0193	27	80	4800	26
27	0.0141	0.0142	0.0143	0.0016	0.0005	0.0173	27	55	4500	27
28	0.0125	0.0126	0.0127	0.0016	0.0005	0.0156	26	60	4375	28
29	0.0112	0.0113	0.0114	0.0015	0.0004	0.0142	26	65	4250	29
30	0.0099	0.0100	0.0101	0.0014	0.0004	0.0128	25	70	4150	30
31	0.0088	0.0089	0.0090	0.0013	0.0004	0.0115	24	..	3825	31
32	0.0079	0.0080	0.0081	0.0012	0.0004	0.0105	24	..	3525	32
33	0.0070	0.0071	0.0072	0.0011	0.0004	0.0095	23	..	3250	33
34	0.0062	0.0063	0.0064	0.0010	0.0003	0.0084	22	..	2975	34
35	0.0055	0.0056	0.0057	0.0009	0.0003	0.0076	21	..	2750	35
36	0.0049	0.0050	0.0051	0.0008	0.0003	0.0069	20	..	2525	36
37	0.0044	0.0045	0.0046	0.0008	0.0003	0.0062	20	..	2325	37
38	0.0039	0.0040	0.0041	0.0007	0.0002	0.0056	19	..	2150	38
39	0.0034	0.0035	0.0036	0.0006	0.0002	0.0050	18	..	1975	39
40	0.0030	0.0031	0.0032	0.0006	0.0002	0.0044	17	..	1800	40
41	0.0027	0.0028	0.0029	0.0005	0.0002	0.0040	17	..	1675	41
42	0.0024	0.0025	0.0026	0.0004	0.0002	0.0037	16	..	1525	42
43	0.0021	0.0022	0.0023	0.0004	0.0001	0.0033	15	..	1400	43
44	0.0019	0.0020	0.0021	0.0004	0.0001	0.0030	14	..	1300	44
	Conductor Resistance at 20°C, Ohms per Foot †, ‡							Theoretical Nominal Bare Wire Diameter, Inches †, ‡		
	Minimum	Nominal	Maximum							
45	3.080	3.348	3.616	0.0003	0.0001	0.00255	11	0.00176		45
46	3.870	4.207	4.544	0.0003	0.0001	0.00235	10	0.00157		46
47	4.868	5.291	5.714	0.0003	0.0001	0.00210	8	0.00140		47
48	6.205	6.745	7.285	0.0002	0.0001	0.00185	7	0.00124		48
49	7.744	8.417	9.090	0.0002	0.0001	0.00170	6	0.00111		49
50	9.734	10.58	11.43	0.0002	0.0001	0.00160	5	0.00099		50

*This maximum bare wire diameter shall be permitted to be exceeded; see 1.4.9.1.

† For metric equivalents, see 1.5.

‡ Conductor size tolerance based on resistance; see 1.4.9.2.

NOTE: For direct conversion inches to millimeters, multiply inches by the factor 25.4 (exact). (This note approved as Authorized Engineering Information 3-11-1987.)

Copyright National Electrical Manufacturers Association
Provided by IHS under license with NEMA
No reproduction or networking permitted without license from IHS
Not for Resale

9009279 0001480 692

POLYESTER, SINGLE ENAMELLED ROUND COPPER MAGNET WIRE THERMAL CLASS 155

INSULATING MATERIALS. The coating is based on polyester resins (1.2.2.2).

THERMAL CLASS. 155°C when tested in accordance with Part 1, para. 1.6 and Part 3, para. 3.58.1.1.

GENERAL REQUIREMENTS. See Part 1.

Characteristics	Test Procedure, See Part 3, Paragraph	Requirements
1. DIMENSIONS	3.1.1.1	See Table S (MW 5-C)
2. ADHERENCE AND FLEXIBILITY	3.2.1.1	No cracks visible in the film coating
3. ELONGATION	3.3.1.1	Not less than value in Table S (MW 5-C)
4. HEAT SHOCK	3.4.1.1	No cracks visible in the film coating after conditioning at 175°C
6. SPRINGBACK	3.6.1.1	Not greater than value in Table S (MW 5-C)
7. DIELECTRIC STRENGTH	3.7.1.1	Not less than value in Table S (MW 5-C)
8. CONTINUITY	3.8.1.1	The number of discontinuities shall not exceed 25 when tested in accordance with the following: 25–30 AWG para. 3.8.1.1.1 31–44 AWG para. 3.8.1.1.1 or 3.8.1.1.2 45–50 AWG para. 3.8.1.1.2

PERIODIC CONFORMANCE TESTS

50. THERMOPLASTIC FLOW	3.50.1.1	Median not less than 250°C with heavy film coated 18 or 36 AWG
51. SOLUBILITY	3.51.1.1	A specimen of heavy film coated 18 or 36 AWG immersed in xylene shall not soften sufficiently to expose the bare conductor
52. DIELECTRIC STRENGTH AT RATED TEMPERATURE	3.52.1.1	Heavy film coated wire shall average not less than 4275 volts for 18 AWG or 1900 volts for 36 AWG
59. SCRAPE RESISTANCE	3.59.1.1	Lowest "grams-to-fail" load for any one of the three tests and the average of the three tests shall be not less than the values in Table S (MW 5-C)

Copyright National Electrical Manufacturers Association
Provided by IHS under license with NEMA
No reproduction or networking permitted without license from IHS
Not for Resale

9009279 0001481 529

POLYESTER, SINGLE ENAMELLED ROUND COPPER MAGNET WIRE THERMAL CLASS 155

Table S (MW 5-C)

AWG Size	Bare Wire Diameter, Inches † Minimum	Nominal	Maximum	Insulation† Minimum Increase in Diameter, Inches	Maximum Overall Diameter, Inches	Elongation, Minimum Percent	Scrape, Grams to Fail Average	Minimum	Springback, Maximum Degrees per Turn	Dielectric Strength, Minimum Breakdown Volts	AWG Size
25	0.0177	0.0179	0.0180 *	0.0009	0.0194	28	400	340	72	2625	25
26	0.0157	0.0159	0.0160 *	0.0009	0.0173	27	380	325	76	2550	26
27	0.0141	0.0142	0.0143	0.0008	0.0156	27	355	300	50	2500	27
28	0.0125	0.0126	0.0127 *	0.0008	0.0140	26	335	285	55	2425	28
29	0.0112	0.0113	0.0114	0.0007	0.0126	26	310	265	61	2375	29
30	0.0099	0.0100	0.0101	0.0007	0.0112	25	295	250	66	2300	30
31	0.0088	0.0089	0.0090	0.0006	0.0100	24	...	...	..	2075	31
32	0.0079	0.0080	0.0081	0.0006	0.0091	24	...	...	..	1850	32
33	0.0070	0.0071	0.0072	0.0005	0.0081	23	...	...	..	1675	33
34	0.0062	0.0063	0.0064	0.0005	0.0072	22	...	...	..	1500	34
35	0.0055	0.0056	0.0057	0.0004	0.0064	21	...	...	..	1325	35
36	0.0049	0.0050	0.0051	0.0004	0.0058	20	...	...	..	1200	36
37	0.0044	0.0045	0.0046	0.0003	0.0052	20	...	...	..	1075	37
38	0.0039	0.0040	0.0041	0.0003	0.0047	19	...	...	..	950	38
39	0.0034	0.0035	0.0036	0.0002	0.0041	18	...	...	..	850	39
40	0.0030	0.0031	0.0032	0.0002	0.0037	17	...	...	..	775	40
41	0.0027	0.0028	0.0029	0.0002	0.0033	17	...	...	..	700	41
42	0.0024	0.0025	0.0026	0.0002	0.0030	16	...	...	..	625	42
43	0.0021	0.0022	0.0023	0.0002	0.0026	15	...	...	..	550	43
44	0.0019	0.0020	0.0021	0.0001	0.0024	14	...	...	..	500	44
	Conductor Resistance at 20°C, Ohms per Foot †, ‡ Minimum	Nominal	Maximum				Theoretical Nominal Bare Wire Diameter, Inches †, ‡				
45	3.080	3.348	3.616	0.00010	0.00205	11	0.00176				45
46	3.870	4.207	4.544	0.00010	0.00185	10	0.00157				46
47	4.868	5.291	5.714	0.00010	0.00170	8	0.00140				47
48	6.205	6.745	7.285	0.00010	0.00150	7	0.00124				48
49	7.744	8.417	9.090	0.00010	0.00130	6	0.00111				49
50	9.734	10.58	11.43	0.00010	0.00120	5	0.00099				50

*This maximum bare wire diameter shall be permitted to be exceeded; see 1.4.9.1.

† For metric equivalents, see 1.5.

‡ Conductor size tolerance based on resistance; see 1.4.9.2.

NOTE: For direct conversion inches to millimeters, multiply inches by the factor 25.4 (exact). (This note approved as Authorized Engineering Information 3-11-1987.)

Copyright National Electrical Manufacturers Association
Provided by IHS under license with NEMA
No reproduction or networking permitted without license from IHS
Not for Resale

9009279 0001482 465

POLYESTER, HEAVY ENAMELLED ROUND COPPER MAGNET WIRE THERMAL CLASS 155

INSULATING MATERIALS. The coating is based on polyester resins (1.2.2.2).

THERMAL CLASS. 155°C when tested in accordance with Part 1, para. 1.6 and Part 3, para. 3.58.1.1.

GENERAL REQUIREMENTS. See Part 1.

Characteristics	Test Procedure, See Part 3, Paragraph	Requirements
1. DIMENSIONS	3.1.1.1	See Table H (MW 5-C)
2. ADHERENCE AND FLEXIBILITY	3.2.1.1	No cracks visible in the film coating
3. ELONGATION	3.3.1.1	Not less than value in Table H (MW 5-C)
4. HEAT SHOCK	3.4.1.1	No cracks visible in the film coating after conditioning at 175°C
6. SPRINGBACK	3.6.1.1	Not greater than value in Table H (MW 5-C)
7. DIELECTRIC STRENGTH	3.7.1.1	Not less than value in Table H (MW 5-C)
8. CONTINUITY	3.8.1.1	The number of discontinuities shall not exceed 5 for 14–24 AWG, 7 for 25–30 AWG, 5 for 31–46 AWG, or 10 for 47–50 AWG, when tested in accordance with the following: 25–30 AWG para. 3.8.1.1.1 31–44 AWG para. 3.8.1.1.1 or 3.8.1.1.2 45–50 AWG para. 3.8.1.1.2

PERIODIC CONFORMANCE TESTS

50. THERMOPLASTIC FLOW	3.50.1.1	Median not less than 250°C with heavy film coated 18 or 36 AWG
51. SOLUBILITY	3.51.1.1	A specimen of heavy film coated 18 or 36 AWG immersed in xylene shall not soften sufficiently to expose the bare conductor
52. DIELECTRIC STRENGTH AT RATED TEMPERATURE	3.52.1.1	Heavy film coated wire shall average not less than 4275 volts for 18 or 1900 volts for 36 AWG
59. SCRAPE RESISTANCE	3.59.1.1	Lowest "grams-to-fail" load for any one of the three tests and the average of the three tests shall be not less than the values in Table H (MW 5-C)

Copyright National Electrical Manufacturers Association
Provided by IHS under license with NEMA
No reproduction or networking permitted without license from IHS
Not for Resale

9009279 0001483 3T1

POLYESTER, HEAVY
ENAMELLED ROUND COPPER MAGNET WIRE
THERMAL CLASS 155
Table H (MW 5-C)

AWG Size	Bare Wire Diameter, Inches †			Insulation †		Elongation, Minimum Percent	Scrape, Grams to Fail		Springback, Maximum Degrees per Turn	Dielectric Strength, Minimum Breakdown Volts	AWG Size
	Minimum	Nominal	Maximum	Minimum Increase in Diameter, Inches	Maximum Overall Diameter, Inches		Average	Minimum			
25	0.0177	0.0179	0.0180 *	0.0018	0.0203	28	720	615	72	4725	25
26	0.0157	0.0159	0.0160 *	0.0017	0.0182	27	675	575	76	4600	26
27	0.0141	0.0142	0.0143	0.0016	0.0164	27	635	540	80	4500	27
28	0.0125	0.0126	0.0127	0.0016	0.0147	26	595	510	55	4375	28
29	0.0112	0.0113	0.0114	0.0015	0.0133	26	560	480	61	4250	29
30	0.0099	0.0100	0.0101	0.0014	0.0119	25	525	450	66	4150	30
31	0.0088	0.0089	0.0090	0.0013	0.0108	24	...	...	..	3825	31
32	0.0079	0.0080	0.0081	0.0012	0.0098	24	...	...	..	3525	32
33	0.0070	0.0071	0.0072	0.0011	0.0088	23	...	...	..	3250	33
34	0.0062	0.0063	0.0064	0.0010	0.0078	22	...	...	..	2975	34
35	0.0055	0.0056	0.0057	0.0009	0.0070	21	...	...	..	2750	35
36	0.0049	0.0050	0.0051	0.0008	0.0063	20	...	...	..	2525	36
37	0.0044	0.0045	0.0046	0.0008	0.0057	20	...	...	..	2325	37
38	0.0039	0.0040	0.0041	0.0007	0.0051	19	...	...	..	2150	38
39	0.0034	0.0035	0.0036	0.0006	0.0045	18	...	...	..	1975	39
40	0.0030	0.0031	0.0032	0.0006	0.0040	17	...	...	..	1800	40
41	0.0027	0.0028	0.0029	0.0005	0.0036	17	...	...	..	1675	41
42	0.0024	0.0025	0.0026	0.0004	0.0032	16	...	...	..	1525	42
43	0.0021	0.0022	0.0023	0.0004	0.0029	15	...	...	..	1400	43
44	0.0019	0.0020	0.0021	0.0004	0.0027	14	...	...	..	1300	44
	Conductor Resistance at 20°C, Ohms per Foot †, ‡						Theoretical Nominal Bare Wire Diameter, Inches †, ‡				
	Minimum	Nominal	Maximum								
45	3.080	3.348	3.616	0.00030	0.00230	11	0.00176				45
46	3.870	4.207	4.544	0.00030	0.00210	10	0.00157				46
47	4.868	5.291	5.714	0.00030	0.00190	8	0.00140				47
48	6.205	6.745	7.285	0.00020	0.00170	7	0.00124				48
49	7.744	8.417	9.090	0.00020	0.00150	6	0.00111				49
50	9.734	10.58	11.43	0.00020	0.00140	5	0.00099				50

*This maximum bare wire diameter shall be permitted to be exceeded; see 1.4.9.1.

† For metric equivalents, see 1.5.

‡ Conductor size tolerance based on resistance; see 1.4.9.2.

NOTE: For direct conversion inches to millimeters, multiply inches by the factor 25.4 (exact). (This note approved as Authorized Engineering Information 3-11-1987.)

Copyright National Electrical Manufacturers Association
Provided by IHS under license with NEMA
No reproduction or networking permitted without license from IHS
Not for Resale

9009279 0001484 238

POLYAMIDE, SINGLE ENAMELLED ROUND COPPER MAGNET WIRE THERMAL CLASS 105

INSULATING MATERIALS. The coating is based on polyamide resins (1.2.2.2).

THERMAL CLASS. 105°C when tested in accordance with Part 1, para. 1.6 and Part 3, para. 3.58.1.1.

GENERAL REQUIREMENTS. See Part 1.

Characteristics	Test Procedure, See Part 3, Paragraph	Requirements
1. DIMENSIONS	3.1.1.1	See Table S (MW 6-C)
2. ADHERENCE AND FLEXIBILITY	3.2.1.1	No cracks visible in the film coating
3. ELONGATION	3.3.1.1	Not less than value in Table S (MW 6-C)
4. HEAT SHOCK	3.4.1.1	No cracks visible in the film coating after conditioning at 175°C
6. SPRINGBACK	3.6.1.1	Not greater than value in Table S (MW 6-C)
7. DIELECTRIC STRENGTH	3.7.1.1	Not less than value in Table S (MW 6-C)
8. CONTINUITY	3.8.1.1	The number of discontinuities shall not exceed 25 when tested in accordance with the following: 14–30 AWG para. 3.8.1.1.1 31–44 AWG para. 3.8.1.1.1 or 3.8.1.1.2
12. SOLDERABILITY	3.12.1.1	Covered with continuous film of solder after immersion as follows: 14–19 AWG 10 seconds at 430°C 20–23 AWG 8 seconds at 430°C 24–29 AWG 6 seconds at 360°C 30–36 AWG 5 seconds at 360°C 37–44 AWG 4 seconds at 360°C

PERIODIC CONFORMANCE TESTS

50. THERMOPLASTIC FLOW	3.50.1.1	Median not less than 170°C with heavy film coated 18 or 36 AWG
51. SOLUBILITY	3.51.1.1	A specimen of heavy film coated 18 or 36 AWG immersed in xylene shall not soften sufficiently to expose the bare conductor
52. DIELECTRIC STRENGTH AT RATED TEMPERATURE	3.52.1.1	Heavy film coated wire shall average not less than 3825 volts for 18 or 1725 volts for 36 AWG

Copyright National Electrical Manufacturers Association
Provided by IHS under license with NEMA
No reproduction or networking permitted without license from IHS
Not for Resale

POLYAMIDE, SINGLE ENAMELLED ROUND COPPER MAGNET WIRE THERMAL CLASS 105

Table S (MW 6-C)

AWG Size	Bare Wire Diameter, Inches†			Insulation †		Elongation, Minimum Percent	Springback, Maximum Degrees per Turn	Dielectric Strength, Minimum Breakdown Volts	AWG Size
	Minimum	Nominal	Maximum	Minimum Increase in Diameter, Inches	Maximum Overall Diameter, Inches				
14	0.0635	0.0641	0.0644 *	0.0016	0.0666	33	42	3175	14
15	0.0565	0.0571	0.0574 *	0.0015	0.0594	33	46	3075	15
16	0.0503	0.0508	0.0511 *	0.0014	0.0531	33	50	3000	16
17	0.0448	0.0453	0.0455 *	0.0014	0.0475	32	54	2925	17
18	0.0399	0.0403	0.0405 *	0.0013	0.0424	32	58	2850	18
19	0.0355	0.0359	0.0361 *	0.0012	0.0379	31	62	2775	19
20	0.0317	0.0320	0.0322 *	0.0012	0.0339	30	66	2700	20
21	0.0282	0.0285	0.0286 *	0.0011	0.0303	30	53	2625	21
22	0.0250	0.0253	0.0254 *	0.0011	0.0270	29	58	2575	22
23	0.0224	0.0226	0.0227 *	0.0010	0.0243	29	62	2500	23
24	0.0199	0.0201	0.0202 *	0.0010	0.0217	28	67	2425	24
25	0.0177	0.0179	0.0180 *	0.0009	0.0194	28	72	2375	25
26	0.0157	0.0159	0.0160 *	0.0009	0.0173	27	76	2300	26
27	0.0141	0.0142	0.0143	0.0008	0.0156	27	50	2250	27
28	0.0125	0.0126	0.0127	0.0008	0.0140	26	55	2175	28
29	0.0112	0.0113	0.0114	0.0007	0.0126	26	61	2150	29
30	0.0099	0.0100	0.0101	0.0007	0.0112	25	66	2075	30
31	0.0088	0.0089	0.0090	0.0006	0.0100	24	..	1875	31
32	0.0079	0.0080	0.0081	0.0006	0.0091	24	..	1675	32
33	0.0070	0.0071	0.0072	0.0005	0.0081	23	..	1500	33
34	0.0062	0.0063	0.0064	0.0005	0.0072	22	..	1350	34
35	0.0055	0.0056	0.0057	0.0004	0.0064	21	..	1200	35
36	0.0049	0.0050	0.0051	0.0004	0.0058	20	..	1075	36
37	0.0044	0.0045	0.0046	0.0003	0.0052	20	..	975	37
38	0.0039	0.0040	0.0041	0.0003	0.0047	19	..	850	38
39	0.0034	0.0035	0.0036	0.0002	0.0041	18	..	775	39
40	0.0030	0.0031	0.0032	0.0002	0.0037	17	..	700	40
41	0.0027	0.0028	0.0029	0.0002	0.0033	17	..	625	41
42	0.0024	0.0025	0.0026	0.0002	0.0030	16	..	575	42
43	0.0021	0.0022	0.0023	0.0002	0.0026	15	..	500	43
44	0.0019	0.0020	0.0021	0.0001	0.0024	14	..	450	44

*This maximum bare wire diameter shall be permitted to be exceeded; see 1.4.9.1.
†For metric equivalent, see 1.5.
NOTE: For direct conversion inches to millimeters, multiply inches by the factor 25.4 (exact). (This note approved as Authorized Engineering Information 3-11-1987.)

Copyright National Electrical Manufacturers Association
Provided by IHS under license with NEMA
No reproduction or networking permitted without license from IHS
Not for Resale

9009279 0001486 000

POLYAMIDE, HEAVY
ENAMELLED ROUND COPPER MAGNET WIRE
THERMAL CLASS 105

INSULATING MATERIALS. The coating is based on polyamide resins (1.2.2.2).

THERMAL CLASS. 105°C when tested in accordance with Part 1, para. 1.6 and Part 3, para. 3.58.1.1.

GENERAL REQUIREMENTS. See Part 1.

Characteristics	Test Procedure, See Part 3, Paragraph	Requirements
1. DIMENSIONS	3.1.1.1	See Table H (MW 6-C)
2. ADHERENCE AND FLEXIBILITY	3.2.1.1	No cracks visible in the film coating
3. ELONGATION	3.3.1.1	Not less than value in Table H (MW 6-C)
4. HEAT SHOCK	3.4.1.1	No cracks visible in the film coating after conditioning at 175°C
6. SPRINGBACK	3.6.1.1	Not greater than value in Table H (MW 6-C)
7. DIELECTRIC STRENGTH	3.7.1.1	Not less than value in Table H (MW 6-C)
8. CONTINUITY	3.8.1.1	The number of discontinuities shall not exceed 5 for 14–24 AWG, 7 for 25–30 AWG, or 5 for 31–44 AWG, when tested in accordance with the following: 14–30 AWG para. 3.8.1.1.1 31–44 AWG para. 3.8.1.1.1 or 3.8.1.1.2
12. SOLDERABILITY	3.12.1.1	Covered with continuous film of solder after immersion as follows: 14–19 AWG 10 seconds at 430°C 20–23 AWG 8 seconds at 430°C 24–29 AWG 6 seconds at 360°C 30–36 AWG 5 seconds at 360°C 37–44 AWG 4 seconds at 360°C

PERIODIC CONFORMANCE TESTS

50. THERMOPLASTIC FLOW	3.50.1.1	Median not less than 170°C with heavy film coated 18 or 36 AWG
51. SOLUBILITY	3.51.1.1	A specimen of heavy film coated 18 or 36 AWG immersed in xylene shall not soften sufficiently to expose the bare conductor
52. DIELECTRIC STRENGTH AT RATED TEMPERATURE	3.52.1.1	Heavy film coated wire shall average not less than 3825 volts for 18 AWG or 1725 volts for 36 AWG

Copyright National Electrical Manufacturers Association
Provided by IHS under license with NEMA
No reproduction or networking permitted without license from IHS
Not for Resale

9009279 0001487 T47

POLYAMIDE, HEAVY
ENAMELLED ROUND COPPER MAGNET WIRE
THERMAL CLASS 105
Table H (MW 6-C)

AWG Size	Bare Wire Diameter, Inches†			Insulation †		Elongation, Minimum Percent	Springback, Maximum Degrees per Turn	Dielectric Strength, Minimum Breakdown Volts	AWG Size
	Minimum	Nominal	Maximum	Minimum Increase in Diameter, Inches	Maximum Overall Diameter, Inches				
14	0.0635	0.0641	0.0644 *	0.0032	0.0682	33	42	5700	14
15	0.0565	0.0571	0.0574 *	0.0030	0.0609	33	46	5550	15
16	0.0503	0.0508	0.0511 *	0.0029	0.0545	33	50	5400	16
17	0.0448	0.0453	0.0455 *	0.0028	0.0488	32	54	5275	17
18	0.0399	0.0403	0.0405 *	0.0026	0.0437	32	58	5125	18
19	0.0355	0.0359	0.0361 *	0.0025	0.0391	31	62	5000	19
20	0.0317	0.0320	0.0322 *	0.0023	0.0351	30	66	4850	20
21	0.0282	0.0285	0.0286 *	0.0022	0.0314	30	53	4725	21
22	0.0250	0.0253	0.0254 *	0.0021	0.0281	29	58	4625	22
23	0.0224	0.0226	0.0227 *	0.0020	0.0253	29	62	4500	23
24	0.0199	0.0201	0.0202 *	0.0019	0.0227	28	67	4375	24
25	0.0177	0.0179	0.0180 *	0.0018	0.0203	28	72	4250	25
26	0.0157	0.0159	0.0160 *	0.0017	0.0182	27	76	4150	26
27	0.0141	0.0142	0.0143	0.0016	0.0164	27	50	4050	27
28	0.0125	0.0126	0.0127	0.0016	0.0147	26	55	3950	28
29	0.0112	0.0113	0.0114	0.0015	0.0133	26	61	3825	29
30	0.0099	0.0100	0.0101	0.0014	0.0119	25	66	3725	30
31	0.0088	0.0089	0.0090	0.0013	0.0108	24	..	3450	31
32	0.0079	0.0080	0.0081	0.0012	0.0098	24	..	3175	32
33	0.0070	0.0071	0.0072	0.0011	0.0088	23	..	2925	33
34	0.0062	0.0063	0.0064	0.0010	0.0078	22	..	2675	34
35	0.0055	0.0056	0.0057	0.0009	0.0070	21	..	2475	35
36	0.0049	0.0050	0.0051	0.0008	0.0063	20	..	2275	36
37	0.0044	0.0045	0.0046	0.0008	0.0057	20	..	2100	37
38	0.0039	0.0040	0.0041	0.0007	0.0051	19	..	1925	38
39	0.0034	0.0035	0.0036	0.0006	0.0045	18	..	1775	39
40	0.0030	0.0031	0.0032	0.0006	0.0040	17	..	1625	40
41	0.0027	0.0028	0.0029	0.0005	0.0036	17	..	1500	41
42	0.0024	0.0025	0.0026	0.0004	0.0032	16	..	1375	42
43	0.0021	0.0022	0.0023	0.0004	0.0029	15	..	1250	43
44	0.0019	0.0020	0.0021	0.0004	0.0027	14	..	1175	44

*This maximum bare wire diameter shall be permitted to be exceeded; see 1.4.9.1.
†For metric equivalent, see 1.5.
NOTE: For direct conversion inches to millimeters, multiply inches by the factor 25.4 (exact). (This note approved as Authorized Engineering Information 3-11-1987.)

Copyright National Electrical Manufacturers Association
Provided by IHS under license with NEMA
No reproduction or networking permitted without license from IHS
Not for Resale

9009279 0001488 983

EPOXY, SINGLE ENAMELLED ROUND COPPER MAGNET WIRE THERMAL CLASS 130

INSULATING MATERIALS. The coating is based on epoxy resins (1.2.2.2).

THERMAL CLASS. 130°C when tested in accordance with Part 1, para. 1.6 and Part 3, para. 3.58.1.1.

GENERAL REQUIREMENTS. See Part 1.

Characteristics	Test Procedure, See Part 3, Paragraph	Requirements
1. DIMENSIONS	3.1.1.1	See Table S (MW 9-C)
2. ADHERENCE AND FLEXIBILITY	3.2.1.1	No cracks visible in the film coating
3. ELONGATION	3.3.1.1	Not less than value in Table S (MW 9-C)
4. HEAT SHOCK	3.4.1.1	No cracks visible in the film coating after conditioning at 175°C
6. SPRINGBACK	3.6.1.1	Not greater than value in Table S (MW 9-C)
7. DIELECTRIC STRENGTH	3.7.1.1	Not less than value in Table S (MW 9-C)
8. CONTINUITY	3.8.1.1	The number of discontinuities shall not exceed 25 when tested in accordance with the following: 14–30 AWG para. 3.8.1.1.1 31–44 AWG para. 3.8.1.1.1 or 3.8.1.1.2 45–50 AWG para. 3.8.1.1.2

PERIODIC CONFORMANCE TESTS

50. THERMOPLASTIC FLOW	3.50.1.1	Median not less than 170°C with heavy film coated 18 or 36 AWG
51. SOLUBILITY	3.51.1.1	A specimen of heavy film coated 18 or 36 AWG immersed in xylene shall not soften sufficiently to expose the bare conductor
52. DIELECTRIC STRENGTH AT RATED TEMPERATURE	3.52.1.1	Heavy film coated wire shall average not less than 4275 volts for 18 or 1900 volts for 36 AWG
54. TRANSFORMER OIL RESISTANCE	3.54.1.1	No cracks or blisters visible in film coating
59. SCRAPE RESISTANCE	3.59.1.1	Lowest "grams-to-fail" load for any of the three tests and the average of the three tests shall be not less than the values in Table S (MW 9-C)

Copyright National Electrical Manufacturers Association
Provided by IHS under license with NEMA
No reproduction or networking permitted without license from IHS
Not for Resale

9009279 0001489 81T

EPOXY, SINGLE
ENAMELLED ROUND COPPER MAGNET WIRE
THERMAL CLASS 130
Table S (MW 9-C)

AWG Size	Bare Wire Diameter, Inches † Minimum	Nominal	Maximum	Insulation † Minimum Increase in Diameter, Inches	Maximum Overall Diameter, Inches	Elongation, Minimum Percent	Scrape, Grams to Fail Average	Minimum	Springback, Maximum Degrees per Turn	Dielectric Strength, Minimum Breakdown Volts	AWG Size
14	0.0635	0.0641	0.0644 *	0.0016	0.0666	33	840	715	42	3525	14
15	0.0565	0.0571	0.0574 *	0.0015	0.0594	33	780	665	46	3425	15
16	0.0503	0.0508	0.0511 *	0.0014	0.0531	33	735	625	50	3325	16
17	0.0448	0.0453	0.0455 *	0.0014	0.0475	32	690	585	54	3250	17
18	0.0399	0.0403	0.0405 *	0.0013	0.0424	32	645	550	58	3175	18
19	0.0355	0.0359	0.0361 *	0.0012	0.0379	31	600	510	62	3075	19
20	0.0317	0.0320	0.0322 *	0.0012	0.0339	30	560	475	66	3000	20
21	0.0282	0.0285	0.0286 *	0.0011	0.0303	30	525	445	53	2925	21
22	0.0250	0.0253	0.0254 *	0.0011	0.0270	29	490	415	58	2850	22
23	0.0224	0.0226	0.0227 *	0.0010	0.0243	29	460	390	62	2775	23
24	0.0199	0.0201	0.0202 *	0.0010	0.0217	28	430	365	67	2700	24
25	0.0177	0.0179	0.0180 *	0.0009	0.0194	28	400	340	72	2625	25
26	0.0157	0.0159	0.0160 *	0.0009	0.0173	27	380	325	76	2550	26
27	0.0141	0.0142	0.0143	0.0008	0.0156	27	355	300	50	2500	27
28	0.0125	0.0126	0.0127	0.0008	0.0140	26	335	285	55	2425	28
29	0.0112	0.0113	0.0114	0.0007	0.0126	26	310	265	61	2375	29
30	0.0099	0.0100	0.0101	0.0007	0.0112	25	295	250	66	2300	30
31	0.0088	0.0089	0.0090	0.0006	0.0100	24	...	...	..	2075	31
32	0.0079	0.0080	0.0081	0.0006	0.0091	24	...	...	..	1850	32
33	0.0070	0.0071	0.0072	0.0005	0.0081	23	...	...	..	1675	33
34	0.0062	0.0063	0.0064	0.0005	0.0072	22	...	...	..	1500	34
35	0.0055	0.0056	0.0057	0.0004	0.0064	21	...	...	..	1325	35
36	0.0049	0.0050	0.0051	0.0004	0.0058	20	...	...	..	1200	36
37	0.0044	0.0045	0.0046	0.0003	0.0052	20	...	...	..	1075	37
38	0.0039	0.0040	0.0041	0.0003	0.0047	19	...	...	..	950	38
39	0.0034	0.0035	0.0036	0.0002	0.0041	18	...	...	..	850	39
40	0.0030	0.0031	0.0032	0.0002	0.0037	17	...	...	..	775	40
41	0.0027	0.0028	0.0029	0.0002	0.0033	17	...	...	..	700	41
42	0.0024	0.0025	0.0026	0.0002	0.0030	16	...	...	..	625	42
43	0.0021	0.0022	0.0023	0.0002	0.0026	15	...	...	..	550	43
44	0.0019	0.0020	0.0021	0.0001	0.0024	14	...	...	..	500	44

	Conductor Resistance at 20°C, Ohms per Foot †, ‡ Minimum	Nominal	Maximum				Theoretical Nominal Bare Wire Diameter, Inches †, ‡	
45	3.080	3.348	3.616	0.00010	0.00205	11	0.00176	45
46	3.870	4.207	4.544	0.00010	0.00185	10	0.00157	46
47	4.868	5.291	5.714	0.00010	0.00170	8	0.00140	47
48	6.205	6.745	7.285	0.00010	0.00150	7	0.00124	48
49	7.744	8.417	9.090	0.00010	0.00130	6	0.00111	49
50	9.734	10.58	11.43	0.00010	0.00120	5	0.00099	50

*This maximum bare wire diameter shall be permitted to be exceeded; see 1.4.9.1.

† For metric equivalents, see 1.5.

‡ Conductor size tolerance based on resistance; see 1.4.9.2.

NOTE: For direct conversion inches to millimeters, multiply inches by the factor 25.4 (exact). (This note approved as Authorized Engineering Information 3-11-1987.)

Copyright National Electrical Manufacturers Association
Provided by IHS under license with NEMA
No reproduction or networking permitted without license from IHS
Not for Resale

9009279 0001490 531

EPOXY, HEAVY
ENAMELLED ROUND COPPER MAGNET WIRE
THERMAL CLASS 130

INSULATING MATERIALS. The coating is based on epoxy resins (1.2.2.2).

THERMAL CLASS. 130°C when tested in accordance with Part 1, para. 1.6 and Part 3, para. 3.58.1.1.

GENERAL REQUIREMENTS. See Part 1.

Characteristics	Test Procedure, See Part 3, Paragraph	Requirements
1. DIMENSIONS	3.1.1.1	See Table H (MW 9-C)
2. ADHERENCE AND FLEXIBILITY	3.2.1.1	No cracks visible in the film coating
3. ELONGATION	3.3.1.1	Not less than value in Table H (MW 9-C)
4. HEAT SHOCK	3.4.1.1	No cracks visible in the film coating after conditioning at 175°C
6. SPRINGBACK	3.6.1.1 3.6.2.1	Not greater than value in Table H (MW 9-C) Not greater than 5°
7. DIELECTRIC STRENGTH	3.7.1.1	Not less than value in Table H (MW 9-C)
8. CONTINUITY	3.8.1.1	The number of discontinuities shall not exceed 5 for 14–24 AWG, 7 for 25–30 AWG, or 5 for 31–46 AWG, when tested in accordance with the following: 14–30 AWG para. 3.8.1.1.1 31–44 AWG para. 3.8.1.1.1 or 3.8.1.1.2 45–50 AWG para. 3.8.1.1.2

PERIODIC CONFORMANCE TESTS

50. THERMOPLASTIC FLOW	3.50.1.1	Median not less than 170°C with heavy film coated 18 or 36 AWG
51. SOLUBILITY	3.51.1.1	A specimen of heavy film coated 18 or 36 AWG immersed in xylene shall not soften sufficiently to expose the bare conductor
52. DIELECTRIC STRENGTH AT RATED TEMPERATURE	3.52.1.1	Heavy film coated wire shall average not less than 4275 volts for 18 AWG or 1900 volts for 36 AWG
54. TRANSFORMER OIL RESISTANCE	3.54.1.1	No cracks or blisters visible in film coating
59. SCRAPE RESISTANCE	3.59.1.1	Lowest "grams-to-fail" load for any one of the three tests and the average of the three tests shall be not less than the values in Table H (MW 9-C)

Copyright National Electrical Manufacturers Association
Provided by IHS under license with NEMA
No reproduction or networking permitted without license from IHS
Not for Resale

9009279 0001491 478

EPOXY, HEAVY
ENAMELLED ROUND COPPER MAGNET WIRE
THERMAL CLASS 130
Table H (MW 9-C)

AWG Size	Bare Wire Diameter, Inches† Minimum	Nominal	Maximum	Insulation† Minimum Increase in Diameter, Inches	Maximum Overall Diameter, Inches	Elongation, Minimum Percent	Scrape Grams to Fail Average	Minimum	Springback, Maximum Degrees per Turn	Dielectric Strength, Minimum Breakdown Volts	AWG Size
4	0.2023	0.2043	0.2053 *	0.0037	0.2098	38	....	....	..	3700	4
5	0.1801	0.1819	0.1828 *	0.0036	0.1872	37	....	....	..	3600	5
6	0.1604	0.1620	0.1628 *	0.0035	0.1671	37	....	....	..	3500	6
7	0.1429	0.1443	0.1450 *	0.0034	0.1491	36	....	....	..	3400	7
8	0.1272	0.1285	0.1292 *	0.0033	0.1332	36	....	....	..	3300	8
9	0.1133	0.1144	0.1150 *	0.0032	0.1189	36	....	....	..	3200	9
10	0.1009	0.1019	0.1024 *	0.0031	0.1061	35	1490	1270	..	6200	10
11	0.0898	0.0907	0.0912 *	0.0030	0.0948	35	1490	1270	..	6000	11
12	0.0800	0.0808	0.0812 *	0.0029	0.0847	34	1490	1270	..	5800	12
13	0.0713	0.0720	0.0724 *	0.0028	0.0757	34	1490	1270	..	5600	13
14	0.0635	0.0641	0.0644 *	0.0032	0.0682	33	1490	1270	42	6325	14
15	0.0565	0.0571	0.0574 *	0.0030	0.0609	33	1400	1190	46	6175	15
16	0.0503	0.0508	0.0511 *	0.0029	0.0545	33	1310	1115	50	6000	16
17	0.0448	0.0453	0.0455 *	0.0028	0.0488	32	1230	1045	54	5850	17
18	0.0399	0.0403	0.0405 *	0.0026	0.0437	32	1150	980	58	5700	18
19	0.0355	0.0359	0.0361 *	0.0025	0.0391	31	1070	910	62	5550	19
20	0.0317	0.0320	0.0322 *	0.0023	0.0351	30	1000	850	66	5400	20
21	0.0282	0.0285	0.0286 *	0.0022	0.0314	30	940	800	53	5250	21
22	0.0250	0.0253	0.0254 *	0.0021	0.0281	29	880	750	58	5125	22
23	0.0224	0.0226	0.0227 *	0.0020	0.0253	29	820	700	62	5000	23
24	0.0199	0.0201	0.0202 *	0.0019	0.0227	28	770	655	67	4850	24
25	0.0177	0.0179	0.0180 *	0.0018	0.0203	28	720	615	72	4725	25
26	0.0157	0.0159	0.0160 *	0.0017	0.0182	27	675	575	76	4600	26
27	0.0141	0.0142	0.0143	0.0016	0.0164	27	635	540	50	4500	27
28	0.0125	0.0126	0.0127	0.0016	0.0147	26	595	510	55	4375	28
29	0.0112	0.0113	0.0114	0.0015	0.0133	26	560	480	61	4250	29
30	0.0099	0.0100	0.0101	0.0014	0.0119	25	525	450	66	4150	30
31	0.0088	0.0089	0.0090	0.0013	0.0108	24	...	...	..	3825	31
32	0.0079	0.0080	0.0081	0.0012	0.0098	24	...	...	..	3525	32
33	0.0070	0.0071	0.0072	0.0011	0.0088	23	...	...	..	3250	33
34	0.0062	0.0063	0.0064	0.0010	0.0078	22	...	...	..	2975	34
35	0.0055	0.0056	0.0057	0.0009	0.0070	21	...	...	..	2750	35
36	0.0049	0.0050	0.0051	0.0008	0.0063	20	...	...	..	2525	36
37	0.0044	0.0045	0.0046	0.0008	0.0057	20	...	...	..	2325	37
38	0.0039	0.0040	0.0041	0.0007	0.0051	19	...	...	..	2150	38
39	0.0034	0.0035	0.0036	0.0006	0.0045	18	...	...	..	1975	39
40	0.0030	0.0031	0.0032	0.0006	0.0040	17	...	...	..	1800	40
41	0.0027	0.0028	0.0029	0.0005	0.0036	17	...	...	..	1675	41
42	0.0024	0.0025	0.0026	0.0004	0.0032	16	...	...	..	1525	42
43	0.0021	0.0022	0.0023	0.0004	0.0029	15	...	...	..	1400	43
44	0.0019	0.0020	0.0021	0.0004	0.0027	14	...	...	..	1300	44
	Conductor Resistance at 20°C, Ohms per Foot †, ‡ Minimum	Nominal	Maximum				Theoretical Nominal Bare Wire Diameter, Inches †, ‡				
45	3.080	3.348	3.616	0.00030	0.00230	11	0.00176				45
46	3.870	4.207	4.544	0.00030	0.00210	10	0.00157				46
47	4.868	5.291	5.714	0.00030	0.00190	8	0.00140				47
48	6.205	6.745	7.285	0.00020	0.00170	7	0.00124				48
49	7.744	8.417	9.090	0.00020	0.00150	6	0.00111				49
50	9.734	10.58	11.43	0.00020	0.00140	5	0.00099				50

*This maximum bare wire diameter shall be permitted to be exceeded; see 1.4.9.1.
†For metric equivalents, see 1.5.
‡Conductor size tolerance based on resistance; see 1.4.9.2.
NOTE: For direct conversion of inches to millimeters, multiply inches by the factor 25.4 (exact). (This note approved as Authorized Engineering [illegible] 7.)

Copyright National Electrical Manufacturers Association
Provided by IHS under license with NEMA
No reproduction or networking permitted without license from IHS
Not for Resale

EPOXY, TRIPLE ENAMELLED ROUND COPPER MAGNET WIRE THERMAL CLASS 130

INSULATING MATERIALS. The coating is based on epoxy resins (1.2.2.2).

THERMAL CLASS. 130°C when tested in accordance with Part 1, para. 1.6 and Part 3, para. 3.58.1.1.

GENERAL REQUIREMENTS. See Part 1.

Characteristics	Test Procedure, See Part 3, Paragraph	Requirements
1. DIMENSIONS	3.1.1.1	See Table T (MW 9-C)
2. ADHERENCE AND FLEXIBILITY	3.2.1.1	No cracks visible in the film coating
3. ELONGATION	3.3.1.1	Not less than value in Table T (MW 9-C)
4. HEAT SHOCK	3.4.1.1	No cracks visible in the film coating after conditioning at 175°C
6. SPRINGBACK	3.6.1.1	Not greater than value in Table T (MW 9-C)
7. DIELECTRIC STRENGTH	3.7.1.1	Not less than value in Table T (MW 9-C)
8. CONTINUITY	3.8.1.1	The number of discontinuities shall not exceed 3 for 14–24 AWG or 5 for 25–30 AWG when tested in accordance with the following: 14–30 AWG para. 3.8.1.1.1
PERIODIC CONFORMANCE TESTS		
50. THERMOPLASTIC FLOW	3.50.1.1	Median not less than 170°C with heavy film coated 18 AWG
51. SOLUBILITY	3.51.1.1	A specimen of heavy film coated 18 AWG immersed in xylene shall not soften sufficiently to expose the bare conductor
52. DIELECTRIC STRENGTH AT RATED TEMPERATURE	3.52.1.1	Heavy film coated wire shall average not less than 4275 volts for 18 AWG
54. TRANSFORMER OIL RESISTANCE	3.54.1.1	No cracks or blisters visible in film coating
59. SCRAPE RESISTANCE	3.59.1.1	Lowest "grams-to-fail" load for any one of the three tests and the average of the three tests shall be not less than the values in Table T (MW 9-C)

Copyright National Electrical Manufacturers Association
Provided by IHS under license with NEMA
No reproduction or networking permitted without license from IHS
Not for Resale

EPOXY, TRIPLE
ENAMELLED ROUND COPPER MAGNET WIRE
THERMAL CLASS 130
Table T (MW 9-C)

AWG Size	Bare Wire Diameter, Inches†			Insulation†		Elongation, Minimum	Scrape, Grams to Fail		Springback, Maximum	Dielectric Strength, Minimum	AWG Size
	Minimum	Nominal	Maximum	Minimum Increase in Diameter, Inches	Maximum Overall Diameter, Inches	Percent	Average	Minimum	Degrees per Turn	Breakdown Volts	
14	0.0635	0.0641	0.0644 *	0.0048	0.0700	33	1735	1475	46	8450	14
15	0.0565	0.0571	0.0574 *	0.0045	0.0627	33	1620	1375	49	8225	15
16	0.0503	0.0508	0.0511 *	0.0043	0.0562	33	1525	1295	53	8000	16
17	0.0448	0.0453	0.0455 *	0.0041	0.0504	32	1425	1210	58	7800	17
18	0.0399	0.0403	0.0405 *	0.0039	0.0452	32	1335	1135	62	7600	18
19	0.0355	0.0359	0.0361 *	0.0037	0.0406	31	1255	1065	66	7400	19
20	0.0317	0.0320	0.0322 *	0.0035	0.0364	30	1180	1000	70	7200	20
21	0.0282	0.0285	0.0286 *	0.0033	0.0326	30	1115	945	53	7025	21
22	0.0250	0.0253	0.0254 *	0.0032	0.0293	29	1045	890	58	6850	22
23	0.0224	0.0226	0.0227 *	0.0030	0.0264	29	975	830	64	6675	23
24	0.0199	0.0201	0.0202 *	0.0029	0.0238	28	910	770	69	6500	24
25	0.0177	0.0179	0.0180 *	0.0027	0.0214	28	850	720	74	6325	25
26	0.0157	0.0159	0.0160 *	0.0026	0.0193	27	795	675	80	6150	26
27	0.0141	0.0142	0.0143	0.0024	0.0173	27	735	625	55	6000	27
28	0.0125	0.0126	0.0127	0.0023	0.0156	26	690	585	60	5850	28
29	0.0112	0.0113	0.0114	0.0022	0.0142	26	645	550	65	5700	29
30	0.0099	0.0100	0.0101	0.0021	0.0128	25	605	515	70	5550	30

*This maximum bare wire diameter shall be permitted to be exceeded; see 1.4.9.1.
†For metric equivalent, see 1.5.
NOTE: For direct conversion inches to millimeters, multiply inches by the factor 25.4 (exact). (This note approved as Authorized Engineering Information 3-11-1987.)

Copyright National Electrical Manufacturers Association
Provided by IHS under license with NEMA
No reproduction or networking permitted without license from IHS
Not for Resale

9009279 0001494 187

SINGLE COTTON COVERED BARE OR FILM COATED ROUND COPPER MAGNET WIRE THERMAL CLASS 90 OR 105

INSULATING MATERIALS. The cotton shall be of good quality and substantially free from knots, ravelings, foreign matter and other irregularities.

THERMAL CLASS. 90°C unimpregnated or 105°C impregnated, as defined in Part 3, 3.58.1.2.

GENERAL REQUIREMENTS. See Part 1.

Characteristics	Test Procedure, See Part 3, Paragraph	Requirements
1. DIMENSIONS	3.1.1.2	See Table S (MW 11-C)
3. ELONGATION	3.3.1.2	Not less than the following:

AWG Size	Minimum Elongation Percent
4/0–1	35
2–9	30
10–23	25
24–34	20
35–40	15

6. SPRINGBACK	3.6.2.1	Not greater than 5°
11. COVERAGE	3.11.1.2	Sizes 4 AWG and smaller. The covering shall not open sufficiently to expose the bare or film coated wire

Copyright National Electrical Manufacturers Association
Provided by IHS under license with NEMA
No reproduction or networking permitted without license from IHS
Not for Resale

9009279 0001495 013

SINGLE COTTON COVERED BARE OR FILM COATED ROUND COPPER MAGNET WIRE
THERMAL CLASS 90 OR 105
Table S (MW 11-C)

AWG Size	Bare Wire Diameter, Inches†			Minimum Increase, One Layer of Cotton		Maximum Overall Diameter						AWG Size
						Bare		Single Film		Heavy Film		
	Minimum	Nominal	Maximum	inches	mm	inches	mm	inches	mm	inches	mm	
4/0	0.4554	0.4600	0.4646	0.0068	0.173	0.4726	12.004	.....	.....	.....	.....	4/0
3/0	0.4055	0.4096	0.4137	0.0068	0.173	0.4217	10.711	.....	.....	.....	.....	3/0
2/0	0.3612	0.3648	0.3684	0.0068	0.173	0.3764	9.561	.....	.....	.....	.....	2/0
1/0	0.3217	0.3249	0.3281	0.0068	0.173	0.3361	8.537	.....	.....	.....	.....	1/0
1	0.2864	0.2893	0.2922	0.0068	0.173	0.3002	7.625	.....	.....	.....	.....	1
2	0.2550	0.2576	0.2602	0.0068	0.173	0.2682	6.812	.....	.....	.....	.....	2
3	0.2271	0.2294	0.2317	0.0068	0.173	0.2397	6.038	.....	.....	.....	.....	3
4	0.2023	0.2043	0.2053 *	0.0068	0.173	0.2133	5.418	.....	.....	0.2178	5.532	4
5	0.1801	0.1819	0.1828 *	0.0068	0.173	0.1908	4.846	.....	.....	0.1952	4.958	5
6	0.1604	0.1620	0.1628 *	0.0068	0.173	0.1708	4.338	.....	.....	0.1751	4.448	6
7	0.1429	0.1443	0.1450 *	0.0068	0.173	0.1530	3.886	.....	.....	0.1571	3.990	7
8	0.1272	0.1285	0.1292 *	0.0068	0.173	0.1372	3.485	.....	.....	0.1412	3.586	8
9	0.1133	0.1144	0.1150 *	0.0060	0.152	0.1220	3.099	.....	.....	0.1259	3.198	9
10	0.1009	0.1019	0.1024 *	0.0051	0.130	0.1084	2.753	.....	.....	0.1121	2.847	10
11	0.0898	0.0907	0.0912 *	0.0047	0.119	0.0967	2.456	.....	.....	0.1003	2.548	11
12	0.0800	0.0808	0.0812 *	0.0047	0.119	0.0867	2.202	.....	.....	0.0902	2.291	12
13	0.0713	0.0720	0.0724 *	0.0047	0.119	0.0779	1.979	.....	.....	0.0812	2.062	13
14	0.0635	0.0641	0.0644 *	0.0047	0.119	0.0699	1.775	0.0721	1.831	0.0737	1.872	14
15	0.0565	0.0571	0.0574 *	0.0047	0.119	0.0629	1.598	0.0649	1.648	0.0664	1.687	15
16	0.0503	0.0508	0.0511 *	0.0047	0.119	0.0566	1.438	0.0586	1.488	0.0600	1.524	16
17	0.0448	0.0453	0.0455 *	0.0047	0.119	0.0510	1.295	0.0530	1.346	0.0543	1.379	17
18	0.0399	0.0403	0.0405 *	0.0047	0.119	0.0460	1.168	0.0479	1.217	0.0492	1.250	18
19	0.0355	0.0359	0.0361 *	0.0047	0.119	0.0416	1.057	0.0434	1.102	0.0446	1.133	19
20	0.0317	0.0320	0.0322 *	0.0047	0.119	0.0377	0.958	0.0394	1.001	0.0406	1.031	20
21	0.0282	0.0285	0.0286 *	0.0047	0.119	0.0341	0.866	0.0358	0.909	0.0369	0.937	21
22	0.0250	0.0253	0.0254 *	0.0043	0.109	0.0304	0.772	0.0320	0.813	0.0331	0.841	22
23	0.0224	0.0226	0.0227 *	0.0043	0.109	0.0277	0.704	0.0293	0.744	0.0303	0.770	23
24	0.0199	0.0201	0.0202 *	0.0043	0.109	0.0252	0.640	0.0267	0.678	0.0277	0.704	24
25	0.0177	0.0179	0.0180 *	0.0038	0.097	0.0225	0.572	0.0239	0.607	0.0248	0.630	25
26	0.0157	0.0159	0.0160 *	0.0038	0.096	0.0205	0.521	0.0218	0.554	0.0227	0.577	26
27	0.0141	0.0142	0.0143	0.0038	0.096	0.0188	0.478	0.0201	0.511	0.0209	0.531	27
28	0.0125	0.0126	0.0127	0.0038	0.096	0.0172	0.437	0.0185	0.470	0.0192	0.488	28
29	0.0112	0.0113	0.0114	0.0038	0.096	0.0159	0.404	0.0171	0.434	0.0178	0.452	29
30	0.0099	0.0100	0.0101	0.0038	0.096	0.0146	0.371	0.0157	0.399	0.0164	0.417	30
31	0.0088	0.0089	0.0090	0.0038	0.096	0.0135	0.343	0.0145	0.368	0.0153	0.389	31
32	0.0079	0.0080	0.0081	0.0038	0.096	0.0126	0.320	0.0136	0.345	0.0143	0.363	32
33	0.0070	0.0071	0.0072	0.0038	0.096	0.0117	0.297	0.0126	0.320	0.0133	0.338	33
34	0.0062	0.0063	0.0064	0.0038	0.096	0.0109	0.277	0.0117	0.297	0.0123	0.312	34
35	0.0055	0.0056	0.0057	0.0038	0.096	0.0102	0.259	0.0109	0.277	0.0115	0.292	35
36	0.0049	0.0050	0.0051	0.0037	0.094	0.0094	0.239	0.0101	0.257	0.0106	0.269	36
37	0.0044	0.0045	0.0046	0.0037	0.094	0.0089	0.226	0.0095	0.241	0.0100	0.254	37
38	0.0039	0.0040	0.0041	0.0037	0.094	0.0084	0.213	0.0090	0.229	0.0094	0.239	38
39	0.0034	0.0035	0.0036	0.0037	0.094	0.0079	0.201	0.0084	0.213	0.0088	0.224	39
40	0.0030	0.0031	0.0032	0.0037	0.094	0.0075	0.190	0.0080	0.203	0.0083	0.211	40

*This maximum bare wire diameter shall be permitted to be exceeded; see 1.4.9.1.
†For metric equivalent, see 1.5.
NOTE: For direct conversion inches to millimeters, multiply inches by the factor 25.4 (exact). (This note approved as Authorized Engineering Information 3-11-1987.)

Copyright National Electrical Manufacturers Association
Provided by IHS under license with NEMA
No reproduction or networking permitted without license from IHS
Not for Resale

9009279 0001496 T5T

DOUBLE COTTON COVERED BARE OR FILM COATED ROUND COPPER MAGNET WIRE THERMAL CLASS 90 OR 105

INSULATING MATERIALS. The cotton shall be of good quality and substantially free from knots, ravelings, foreign matter and other irregularities.

THERMAL CLASS. 90°C unimpregnated or 105°C impregnated, as defined in Part 3, para. 3.58.1.2.

GENERAL REQUIREMENTS. See Part 1.

Characteristics	Test Procedure, See Part 3, Paragraph	Requirements
1. DIMENSIONS	3.1.1.2	See Table D (MW 11-C)
3. ELONGATION	3.3.1.2	Not less than the following:
6. SPRINGBACK	3.6.2.1	Not greater than 5°
11. COVERAGE	3.11.1.2	Sizes 4 AWG and smaller. The covering shall not open sufficiently to expose the bare or film-coated wire.

AWG Size	Minimum Elongation Percent
4/0–1	35
2–9	30
10–23	25
24–34	20
35–40	15

Copyright National Electrical Manufacturers Association
Provided by IHS under license with NEMA
No reproduction or networking permitted without license from IHS
Not for Resale

9009279 0001497 996

DOUBLE COTTON COVERED BARE OR FILM COATED ROUND COPPER MAGNET WIRE THERMAL CLASS 90 OR 105

Table D (MW 11-C)

AWG Size	Bare Wire Diameter, Inches†			Minimum Increase, Two Layers of Cotton		Maximum Overall Diameter						AWG Size
						Bare		Single Film		Heavy Film		
	Minimum	Nominal	Maximum	inches	mm	inches	mm	inches	mm	inches	mm	
4/0	0.4554	0.4600	0.4646	0.0136	0.345	0.4806	12.207	.....	.....	.....	.....	4/0
3/0	0.4055	0.4096	0.4137	0.0136	0.345	0.4297	10.914	.....	.....	.....	.....	3/0
2/0	0.3612	0.3648	0.3684	0.0136	0.345	0.3844	9.764	.....	.....	.....	.....	2/0
1/0	0.3217	0.3249	0.3281	0.0136	0.345	0.3441	8.740	.....	.....	.....	.....	1/0
1	0.2864	0.2893	0.2922	0.0136	0.345	0.3082	7.828	.....	.....	.....	.....	1
2	0.2550	0.2576	0.2602	0.0136	0.345	0.2762	7.015	.....	.....	.....	.....	2
3	0.2271	0.2294	0.2317	0.0136	0.345	0.2477	6.292	.....	.....	.....	.....	3
4	0.2029	0.2043	0.2053 *	0.0136	0.345	0.2213	5.621	.....	.....	0.2258	5.735	4
5	0.1801	0.1819	0.1828 *	0.0136	0.345	0.1988	5.050	.....	.....	0.2032	5.161	5
6	0.1604	0.1620	0.1628 *	0.0119	0.302	0.1768	4.491	.....	.....	0.1811	4.600	6
7	0.1429	0.1443	0.1450 *	0.0119	0.302	0.1590	4.039	.....	.....	0.1631	4.143	7
8	0.1272	0.1285	0.1292 *	0.0119	0.302	0.1432	3.637	.....	.....	0.1472	3.739	8
9	0.1133	0.1144	0.1150 *	0.0102	0.259	0.1270	3.226	.....	.....	0.1309	3.325	9
10	0.1009	0.1019	0.1024 *	0.0094	0.239	0.1134	2.880	.....	.....	0.1171	2.974	10
11	0.0898	0.0907	0.0912 *	0.0081	0.206	0.1007	2.558	.....	.....	0.1043	2.649	11
12	0.0800	0.0808	0.0812 *	0.0081	0.206	0.0907	2.304	.....	.....	0.0942	2.393	12
13	0.0713	0.0720	0.0724 *	0.0081	0.206	0.0819	2.080	.....	.....	0.0852	2.164	13
14	0.0635	0.0641	0.0644 *	0.0081	0.206	0.0739	1.877	0.0761	1.933	0.0777	1.974	14
15	0.0565	0.0571	0.0574 *	0.0081	0.206	0.0669	1.699	0.0689	1.750	0.0704	1.788	15
16	0.0503	0.0508	0.0511 *	0.0081	0.206	0.0606	1.539	0.0626	1.590	0.0640	1.626	16
17	0.0448	0.0453	0.0455 *	0.0081	0.206	0.0550	1.397	0.0570	1.448	0.0583	1.481	17
18	0.0399	0.0403	0.0405 *	0.0081	0.206	0.0500	1.270	0.0519	1.318	0.0532	1.351	18
19	0.0355	0.0359	0.0361 *	0.0081	0.206	0.0456	1.158	0.0474	1.204	0.0486	1.234	19
20	0.0317	0.0320	0.0322 *	0.0081	0.206	0.0417	1.059	0.0434	1.102	0.0446	1.133	20
21	0.0282	0.0285	0.0286 *	0.0081	0.206	0.0381	0.968	0.0398	1.011	0.0409	1.039	21
22	0.0250	0.0253	0.0254 *	0.0077	0.196	0.0344	0.874	0.0360	0.914	0.0371	0.942	22
23	0.0224	0.0226	0.0227 *	0.0077	0.196	0.0317	0.805	0.0333	0.846	0.0343	0.871	23
24	0.0199	0.0201	0.0202 *	0.0077	0.196	0.0292	0.742	0.0307	0.780	0.0317	0.805	24
25	0.0177	0.0179	0.0180 *	0.0072	0.183	0.0265	0.673	0.0279	0.709	0.0288	0.732	25
26	0.0157	0.0159	0.0160 *	0.0072	0.183	0.0245	0.622	0.0258	0.655	0.0267	0.678	26
27	0.0141	0.0142	0.0143	0.0072	0.183	0.0228	0.579	0.0241	0.612	0.0249	0.632	27
28	0.0125	0.0126	0.0127	0.0072	0.183	0.0212	0.538	0.0225	0.572	0.0232	0.589	28
29	0.0112	0.0113	0.0114	0.0072	0.183	0.0199	0.505	0.0211	0.536	0.0218	0.554	29
30	0.0099	0.0100	0.0101	0.0072	0.183	0.0186	0.472	0.0197	0.500	0.0204	0.518	30
31	0.0088	0.0089	0.0090	0.0072	0.183	0.0175	0.444	0.0185	0.470	0.0193	0.490	31
32	0.0079	0.0080	0.0081	0.0072	0.183	0.0166	0.422	0.0176	0.447	0.0183	0.465	32
33	0.0070	0.0071	0.0072	0.0072	0.183	0.0157	0.399	0.0166	0.422	0.0173	0.439	33
34	0.0062	0.0063	0.0064	0.0072	0.183	0.0149	0.378	0.0157	0.399	0.0163	0.414	34
35	0.0055	0.0056	0.0057	0.0072	0.183	0.0142	0.361	0.0149	0.378	0.0155	0.394	35
36	0.0049	0.0050	0.0051	0.0068	0.173	0.0131	0.333	0.0138	0.351	0.0143	0.363	36
37	0.0044	0.0045	0.0046	0.0068	0.173	0.0126	0.320	0.0132	0.335	0.0137	0.348	37
38	0.0039	0.0040	0.0041	0.0068	0.173	0.0121	0.307	0.0127	0.323	0.0131	0.333	38
39	0.0034	0.0035	0.0036	0.0068	0.173	0.0116	0.295	0.0121	0.307	0.0125	0.318	39
40	0.0030	0.0031	0.0032	0.0068	0.173	0.0112	0.284	0.0117	0.297	0.0120	0.305	40

*This maximum bare wire diameter shall be permitted to be exceeded; see 1.4.9.1.
†For metric equivalent, see 1.5.
NOTE: For direct conversion inches to millimeters, multiply inches by the factor 25.4 (exact). (This note approved as Authorized Engineering Information 3-11-1987.)

Copyright National Electrical Manufacturers Association
Provided by IHS under license with NEMA
No reproduction or networking permitted without license from IHS
Not for Resale

9009279 0001498 822

EPOXY, HEAVY AND QUADRUPLE ENAMELLED RECTANGULAR AND SQUARE COPPER MAGNET WIRE THERMAL CLASS 130

INSULATING MATERIALS. The coating is based on epoxy resins (1.2.2.2).

THERMAL CLASS. 130°C when tested in accordance with Part 1, para. 1.6 and Part 3, para. 3.58.2.1.

GENERAL REQUIREMENTS. See Part 1.

Characteristics	Test Procedure, See Part 3, Paragraph	Requirements
1. DIMENSIONS	3.1.2.1	Rectangular Wire: a. Dimensions and Radii—see Table 1-13 b. Thickness and width tolerances—see Table 1-14 c. Increase in thickness and width due to film coating—see Table TW (MW 14-C) Square Wire: Bare wire dimensions and tolerances, radii, and increase in dimensions due to film coating—see Table SQ (MW 14-C)
2. ADHERENCE AND FLEXIBILITY	3.2.2.1	No cracks visible in the film coating
3. ELONGATION	3.3.2.1	Not less than 32 percent for thicknesses less than 0.049 inch (1.25 mm) and greater or 30 percent for thicknesses less than 0.049 inch (1.25 mm)
4. HEAT SHOCK	3.4.2.1	No cracks visible in the film coating after 30 percent elongation followed by conditioning at 150°C ± 3°C
6. SPRINGBACK	3.6.2.1	Not greater than 5°
7. DIELECTRIC STRENGTH	3.7.2.1	

Film Coating	Minimum Breakdown Voltage: Any Three of Four Electrodes	Minimum Breakdown Voltage: Fourth Electrode
Heavy	1500	500
Quadruple	2500	900

PERIODIC CONFORMANCE TESTS

50. THERMOPLASTIC FLOW	3.50.2.1	Median not less than 170°C with heavy film coated 18 AWG
51. SOLUBILITY	3.51.2.1	A specimen immersed in xylene shall not soften sufficiently to expose the bare conductor
52. DIELECTRIC STRENGTH AT RATED TEMPERATURE	3.52.2.1	Average not less than 4275 volts with heavy film coated 18 AWG
54. TRANSFORMER OIL RESISTANCE	3.54.2.1	No cracks or blisters visible in film coating

Copyright National Electrical Manufacturers Association
Provided by IHS under license with NEMA
No reproduction or networking permitted without license from IHS
Not for Resale

9009279 0001499 769

EPOXY, HEAVY AND QUADRUPLE ENAMELLED RECTANGULAR AND SQUARE COPPER MAGNET WIRE THERMAL CLASS 130

Table TW (MW 14-C) Rectangular

Increase in Thickness and Width Due to Film Coating

Build	Increase in Width				Increase in Thickness			
	Minimum		Maximum*		Minimum		Maximum*	
	inches	mm	inches	mm	inches	mm	inches	mm
Heavy	0.0025	0.064	0.0045	0.114	0.0030	0.076	0.0050	0.127
Quadruple	0.0040	0.102	0.0060	0.152	0.0050	0.127	0.0070	0.178

*The maximum increase shall be permitted to be exceeded provided the maximum overall dimension of the coated wire does not exceed the sum of the maximum dimension of the bare wire plus the maximum increase due to the coating.
NOTE: For direct conversion of inches to millimeters, multiply inches by the factor 25.4 (exact). (This note approved as Authorized Engineering Information 3-11-1987.)

Table SQ (MW 14-C) Square

Dimensions of Square Wire—1 Through 14 AWG

Square AWG Size	Bare Wire Dimensions						Nominal Radii †		Heavy				Quadruple			
	Minimum		Nominal		Maximum				Minimum Increase in Dimension		Maximum Overall Dimension		Minimum Increase in Dimension		Maximum Overall Dimension	
	inches	mm	inches	mm	inches	mm	inches	mm	inches	mm	inches	mm	inches	mm	inches	mm
1	0.2864	7.275	0.2893	7.348	0.2922	7.422	0.040	1.02	0.0030	0.076	0.2972	7.549	0.0050	0.127	0.2992	7.600
2	0.2550	6.477	0.2576	6.543	0.2602	6.609	0.040	1.02	0.0030	0.076	0.2652	6.736	0.0050	0.127	0.2672	6.787
3	0.2271	5.768	0.2294	5.827	0.2317	5.885	0.040	1.02	0.0030	0.076	0.2367	6.012	0.0050	0.127	0.2387	6.063
4	0.2023	5.138	0.2043	5.189	0.2063	5.240	0.040	1.02	0.0030	0.076	0.2113	5.367	0.0050	0.127	0.2133	5.418
5	0.1801	4.575	0.1819	4.620	0.1837	4.666	0.040	1.02	0.0030	0.076	0.1887	4.793	0.0050	0.127	0.1907	4.844
6	0.1604	4.074	0.1620	4.115	0.1636	4.155	0.032	0.81	0.0030	0.076	0.1686	4.282	0.0050	0.127	0.1706	4.333
7	0.1429	3.630	0.1443	3.665	0.1457	3.701	0.032	0.81	0.0030	0.076	0.1507	3.828	0.0050	0.127	0.1527	3.879
8	0.1272	3.231	0.1285	3.264	0.1298	3.297	0.032	0.81	0.0030	0.076	0.1348	3.424	0.0050	0.127	0.1368	3.475
9	0.1133	2.878	0.1144	2.906	0.1155	2.934	0.026	0.66	0.0030	0.076	0.1205	3.061	0.0050	0.127	0.1225	3.112
10	0.1009	2.563	0.1019	2.588	0.1029	2.614	0.026	0.66	0.0030	0.076	0.1079	2.741	0.0050	0.127	0.1099	2.791
11	0.0897	2.278	0.0907	2.304	0.0917	2.329	0.020	0.51	0.0030	0.076	0.0967	2.456	0.0050	0.127	0.0987	2.507
12	0.0798	2.027	0.0808	2.052	0.0818	2.078	0.020	0.51	0.0030	0.076	0.0868	2.205	0.0050	0.127	0.0888	2.256
13	0.0710	1.803	0.0720	1.829	0.0730	1.854	0.016	0.41	0.0030	0.076	0.0780	1.981	0.0050	0.127	0.0800	2.032
14	0.0631	1.603	0.0641	1.628	0.0651	1.654	0.016	0.41	0.0030	0.076	0.0701	1.781	0.0050	0.127	0.0721	1.831

† Radii tolerance is plus or minus 25 percent.

NOTE: For direct conversion of inches to millimeters, multiply inches by the factor 25.4 (exact).
Authorized Engineering Information 3-11-1987.

Copyright National Electrical Manufacturers Association
Provided by IHS under license with NEMA
No reproduction or networking permitted without license from IHS
Not for Resale

9009279 0001500 200

POLYVINYL ACETAL, SINGLE ENAMELLED ROUND ALUMINUM MAGNET WIRE THERMAL CLASS 105

INSULATING MATERIALS. The coating is based on a blend of polyvinyl acetal and phenolic resins (1.2.2.2).

THERMAL CLASS. 105°C when tested in accordance with Part 1, para. 1.6 and Part 3, para. 3.58.1.1.

GENERAL REQUIREMENTS. See Part 1.

Characteristics	Test Procedure, See Part 3, Paragraph	Requirements
1. DIMENSIONS	3.1.1.1	See Table S (MW 15-A)
2. ADHERENCE AND FLEXIBILITY	3.2.1.1	No cracks visible in the film coating
3. ELONGATION	3.3.1.1	Not less than value in Table S (MW 15-A)
4. HEAT SHOCK	3.4.1.1	No cracks visible in the film coating after conditioning at 175°C
7. DIELECTRIC STRENGTH	3.7.1.1	Not less than value in Table S (MW 15-A)
8. CONTINUITY	3.8.1.1	The number of discontinuities shall not exceed 25 for 14–24 AWG when tested in accordance with the following: 14–24 AWG para. 3.8.1.1.1
9. COMPLETENESS OF CURE	3.9.1.1.1	No swelling or blistering visible in film coating
PERIODIC CONFORMANCE TESTS		
50. THERMOPLASTIC FLOW	3.50.1.1	Median not less than 180°C with heavy film coated 18 AWG
51. SOLUBILITY	3.51.1.1	A specimen of heavy film coated 18 immersed in xylene shall not soften sufficiently to expose the bare conductor
52. DIELECTRIC STRENGTH AT RATED TEMPERATURE	3.52.1.1	Average not less than 4275 volts with heavy film coated 18 AWG
54. TRANSFORMER OIL RESISTANCE	3.54.1.1	No cracks or blisters visible in film coating
59. SCRAPE RESISTANCE	3.59.1.1	Lowest "grams-to-fail" load for any one of the three tests and the average of the three tests shall be not less than the values in Table S (MW 15-A)

Copyright National Electrical Manufacturers Association
Provided by IHS under license with NEMA
No reproduction or networking permitted without license from IHS
Not for Resale

9009279 0001501 147

POLYVINYL ACETAL, SINGLE ENAMELLED ROUND ALUMINUM MAGNET WIRE THERMAL CLASS 105

Table S (MW 15-A)

AWG Size	Bare Wire Diameter, Inches†			Insulation†		Elongation, Minimum Percent	Scrape, Grams to Fail		Dielectric Strength, Minimum Breakdown Volts	AWG Size
	Minimum	Nominal	Maximum	Minimum Increase in Diameter, Inches	Maximum Overall Diameter, Inches		Average	Minimum		
14	0.0635	0.0641	0.0644 *	0.0016	0.0666	15	505	430	3525	14
15	0.0565	0.0571	0.0574 *	0.0015	0.0594	15	470	400	3425	15
16	0.0503	0.0508	0.0511 *	0.0014	0.0531	15	440	375	3325	16
17	0.0448	0.0453	0.0455 *	0.0014	0.0475	15	415	350	3250	17
18	0.0399	0.0403	0.0405 *	0.0013	0.0424	15	390	330	3175	18
19	0.0355	0.0359	0.0361 *	0.0012	0.0379	15	360	305	3075	19
20	0.0317	0.0320	0.0322 *	0.0012	0.0339	14	335	285	3000	20
21	0.0282	0.0285	0.0286 *	0.0011	0.0303	14	315	265	2925	21
22	0.0250	0.0253	0.0254 *	0.0011	0.0270	14	295	250	2850	22
23	0.0224	0.0226	0.0227 *	0.0010	0.0243	14	275	235	2775	23
24	0.0199	0.0201	0.0202 *	0.0010	0.0217	13	260	220	2700	24

*This maximum bare wire diameter shall be permitted to be exceeded; see 1.4.9.1.
†For metric equivalent, see 1.5.
NOTE: For direct conversion inches to millimeters, multiply inches by the factor 25.4 (exact). (This note approved as Authorized Engineering Information 3-11-1987.)

Copyright National Electrical Manufacturers Association
Provided by IHS under license with NEMA
No reproduction or networking permitted without license from IHS
Not for Resale

9009279 0001502 083

POLYVINYL ACETAL, HEAVY ENAMELLED ROUND ALUMINUM MAGNET WIRE THERMAL CLASS 105

INSULATING MATERIALS. The coating is based on a blend of polyvinyl acetal and phenolic resins (1.2.2.2).

THERMAL CLASS. 105°C when tested in accordance with Part 1, para. 1.6 and Part 3, para. 3.58.1.1.

GENERAL REQUIREMENTS. See Part 1.

Characteristics	Test Procedure, See Part 3, Paragraph	Requirements
1. DIMENSIONS	3.1.1.1	See Table H (MW 15-A)
2. ADHERENCE AND FLEXIBILITY	3.2.1.1	No cracks visible in the film coating
3. ELONGATION	3.3.1.1	Not less than value in Table H (MW 15-A)
4. HEAT SHOCK	3.4.1.1	No cracks visible in the film coating after conditioning at 175°C
6. SPRINGBACK	3.6.2.1	Not greater than 4°
7. DIELECTRIC STRENGTH	3.7.1.1	Not less than value in Table H (MW 15-A)
8. CONTINUITY	3.8.1.1	The number of discontinuities shall not exceed 10 for 14–24 AWG, when tested in accordance with the following: 14–24 AWG para. 3.8.1.1.1
9. COMPLETENESS OF CURE	3.9.1.1.1	No swelling or blistering visible in film coating

PERIODIC CONFORMANCE TESTS

50. THERMOPLASTIC FLOW	3.50.1.1	Median not less than 180°C with heavy film coated 18 AWG
51. SOLUBILITY	3.51.1.1	A specimen of heavy film coated 18 AWG immersed in xylene shall not soften sufficiently to expose the bare conductor
52. DIELECTRIC STRENGTH AT RATED TEMPERATURE	3.52.1.1	Average not less than 4275 volts with heavy film coated 18 AWG
54. TRANSFORMER OIL RESISTANCE	3.54.1.1	No cracks or blisters visible in film coating
59. SCRAPE RESISTANCE	3.59.1.1	Lowest "grams-to-fail" load for any one of the three tests and the average of the three tests shall be not less than the values in Table H (MW 15-A)

Copyright National Electrical Manufacturers Association
Provided by IHS under license with NEMA
No reproduction or networking permitted without license from IHS
Not for Resale

POLYVINYL ACETAL, HEAVY
ENAMELLED ROUND ALUMINUM MAGNET WIRE
THERMAL CLASS 105
Table H (MW 15-A)

AWG Size	Bare Wire Diameter, Inches†			Insulation†		Elongation, Minimum	Scrape, Grams to Fail		Dielectric Strength, Minimum Breakdown	AWG Size
	Minimum	Nominal	Maximum	Minimum Increase in Diameter, Inches	Maximum Overall Diameter, Inches	Percent	Average	Minimum	Volts	
4	0.2023	0.2043	0.2053 *	0.0037	0.2098	15	...	...	3700	4
5	0.1801	0.1819	0.1828 *	0.0036	0.1872	15	...	...	3600	5
6	0.1604	0.1620	0.1628 *	0.0035	0.1671	15	...	...	3500	6
7	0.1429	0.1443	0.1450 *	0.0034	0.1491	15	...	...	3400	7
8	0.1272	0.1285	0.1292 *	0.0033	0.1332	15	...	...	6600	8
9	0.1133	0.1144	0.1150 *	0.0032	0.1189	15	...	...	6400	9
10	0.1009	0.1019	0.1024 *	0.0031	0.1061	15	895	760	6200	10
11	0.0898	0.0907	0.0912 *	0.0030	0.0948	15	895	760	6000	11
12	0.0800	0.0808	0.0812 *	0.0029	0.0847	15	895	760	5800	12
13	0.0713	0.0720	0.0724 *	0.0028	0.0757	15	895	760	5600	13
14	0.0635	0.0641	0.0644 *	0.0032	0.0682	15	895	760	6325	14
15	0.0565	0.0571	0.0574 *	0.0030	0.0609	15	840	715	6175	15
16	0.0503	0.0508	0.0511 *	0.0029	0.0545	15	785	670	6000	16
17	0.0448	0.0453	0.0455 *	0.0028	0.0488	15	740	625	5850	17
18	0.0399	0.0403	0.0405 *	0.0026	0.0437	15	690	590	5700	18
19	0.0355	0.0359	0.0361 *	0.0025	0.0391	15	640	545	5550	19
20	0.0317	0.0320	0.0322 *	0.0023	0.0351	14	600	510	5400	20
21	0.0282	0.0285	0.0286 *	0.0022	0.0314	14	565	480	5250	21
22	0.0250	0.0253	0.0254 *	0.0021	0.0281	14	530	450	5125	22
23	0.0224	0.0226	0.0227 *	0.0020	0.0253	14	490	420	5000	23
24	0.0199	0.0201	0.0202 *	0.0019	0.0227	13	460	395	4850	24

*This maximum bare wire diameter shall be permitted to be exceeded; see 1.4.9.1.
†For metric equivalent, see 1.5.
NOTE: For direct conversion inches to millimeters, multiply inches by the factor 25.4 (exact). (This note approved as Authorized Engineering Information 3-11-1987.)

Copyright National Electrical Manufacturers Association
Provided by IHS under license with NEMA
No reproduction or networking permitted without license from IHS
Not for Resale

9009279 0001504 956

POLYVINYL ACETAL, SINGLE ENAMELLED ROUND COPPER MAGNET WIRE THERMAL CLASS 105

INSULATING MATERIALS. The coating is based on a blend of polyvinyl acetal and phenolic resins (1.2.2.2).

THERMAL CLASS. 105°C when tested in accordance with Part 1, para. 1.6 and Part 3, para. 3.58.1.1.

GENERAL REQUIREMENTS. See Part 1.

Characteristics	Test Procedure, See Part 3, Paragraph	Requirements
1. DIMENSIONS	3.1.1.1	See Table S (MW 15-C)
2. ADHERENCE AND FLEXIBILITY	3.2.1.1	No cracks visible in the film coating
3. ELONGATION	3.3.1.1	Not less than value in Table S (MW 15-C)
4. HEAT SHOCK	3.4.1.1	No cracks visible in the film coating after conditioning at 175°C
6. SPRINGBACK	3.6.1.1	Not greater than value in Table S (MW 15-C)
7. DIELECTRIC STRENGTH	3.7.1.1	Not less than value in Table S (MW 15-C)
8. CONTINUITY	3.8.1.1	The number of discontinuities shall not exceed 25 when tested in accordance with the following: 14–30 AWG para. 3.8.1.1.1 31–44 AWG para. 3.8.1.1.1 or 3.8.1.1.2 45–56 AWG para. 3.8.1.1.2
9. COMPLETENESS OF CURE	3.9.1.1.1	No swelling or blistering in film coating

PERIODIC CONFORMANCE TESTS

50. THERMOPLASTIC FLOW	3.50.1.1	Median not less than 180°C with heavy film coated 18 or 36 AWG
51. SOLUBILITY	3.51.1.1	A specimen of heavy film coated 18 or 36 AWG immersed in xylene shall not soften sufficiently to expose the bare conductor
52. DIELECTRIC STRENGTH AT RATED TEMPERATURE	3.52.1.1	Heavy film coated wire shall average not less than 4275 volts for 18 AWG or 1900 volts for 36 AWG
54. TRANSFORMER OIL RESISTANCE	3.54.1.1	No cracks or blisters visible in film coating
59. SCRAPE RESISTANCE	3.59.1.1	Lowest "grams-to-fail" load for any one of the three tests and the average of the three tests shall be not less than the values in Table S (MW 15-C)

Copyright National Electrical Manufacturers Association
Provided by IHS under license with NEMA
No reproduction or networking permitted without license from IHS
Not for Resale

POLYVINYL ACETAL, SINGLE ENAMELLED ROUND COPPER MAGNET WIRE THERMAL CLASS 105

Table S (MW 15-C)

AWG Size	Bare Wire Diameter, Inches† Minimum	Nominal	Maximum	Insulation† Minimum Increase in Diameter, Inches	Maximum Overall Diameter, Inches	Elongation, Minimum Percent	Scrape, Grams to Fail Average	Minimum	Springback, Maximum Degrees per Turn	Dielectric Strength, Minimum Breakdown Volts	AWG Size
14	0.0635	0.0641	0.0644 *	0.0016	0.0666	33	840	715	42	3525	14
15	0.0565	0.0571	0.0574 *	0.0015	0.0594	33	780	665	46	3425	15
16	0.0503	0.0508	0.0511 *	0.0014	0.0531	33	735	625	50	3325	16
17	0.0448	0.0453	0.0455 *	0.0014	0.0475	32	690	585	54	3250	17
18	0.0399	0.0403	0.0405 *	0.0013	0.0424	32	645	550	58	3175	18
19	0.0355	0.0359	0.0361 *	0.0012	0.0379	31	600	510	62	3075	19
20	0.0317	0.0320	0.0322 *	0.0012	0.0339	30	560	475	66	3000	20
21	0.0282	0.0285	0.0286 *	0.0011	0.0303	30	525	445	53	2925	21
22	0.0250	0.0253	0.0254 *	0.0011	0.0270	29	490	415	58	2850	22
23	0.0224	0.0226	0.0227 *	0.0010	0.0243	29	460	390	62	2775	23
24	0.0199	0.0201	0.0202 *	0.0010	0.0217	28	430	365	67	2700	24
25	0.0177	0.0179	0.0180 *	0.0009	0.0194	28	400	340	72	2625	25
26	0.0157	0.0159	0.0160 *	0.0009	0.0173	27	380	325	76	2550	26
27	0.0141	0.0142	0.0143	0.0008	0.0156	27	355	300	50	2500	27
28	0.0125	0.0126	0.0127	0.0008	0.0140	26	335	285	55	2425	28
29	0.0112	0.0113	0.0114	0.0007	0.0126	26	310	265	61	2375	29
30	0.0099	0.0100	0.0101	0.0007	0.0112	25	295	250	66	2300	30
31	0.0088	0.0089	0.0090	0.0006	0.0100	24	...	...	..	2075	31
32	0.0079	0.0080	0.0081	0.0006	0.0091	24	...	...	..	1850	32
33	0.0070	0.0071	0.0072	0.0005	0.0081	23	...	...	..	1675	33
34	0.0062	0.0063	0.0064	0.0005	0.0072	22	...	...	..	1500	34
35	0.0055	0.0056	0.0057	0.0004	0.0064	21	...	...	..	1325	35
36	0.0049	0.0050	0.0051	0.0004	0.0058	20	...	...	..	1200	36
37	0.0044	0.0045	0.0046	0.0003	0.0052	20	...	...	..	1075	37
38	0.0039	0.0040	0.0041	0.0003	0.0047	19	...	...	..	950	38
39	0.0034	0.0035	0.0036	0.0002	0.0041	18	...	...	..	850	39
40	0.0030	0.0031	0.0032	0.0002	0.0037	17	...	...	..	775	40
41	0.0027	0.0028	0.0029	0.0002	0.0033	17	...	...	..	700	41
42	0.0024	0.0025	0.0026	0.0002	0.0030	16	...	...	..	625	42
43	0.0021	0.0022	0.0023	0.0002	0.0026	15	...	...	..	550	43
44	0.0019	0.0020	0.0021	0.0001	0.0024	14	...	...	..	500	44

	Conductor Resistance at 20°C, Ohms per Foot †, ‡ Minimum	Nominal	Maximum				Theoretical Nominal Bare Wire Diameter, Inches †, ‡	
45	3.080	3.348	3.616	0.00010	0.00205	11	0.00176	45
46	3.870	4.207	4.544	0.00010	0.00185	10	0.00157	46
47	4.868	5.291	5.714	0.00010	0.00170	8	0.00140	47
48	6.205	6.745	7.285	0.00010	0.00150	7	0.00124	48
49	7.744	8.417	9.090	0.00010	0.00130	6	0.00111	49
50	9.734	10.58	11.43	0.00010	0.00120	5	0.00099	50
51	12.32	13.39	14.46	0.00010	0.00110	..	0.00088	51
52	15.69	17.05	18.41	0.00010	0.00100	..	0.00078	52
53	19.48	21.17	22.86	0.00005	0.00085	..	0.00070	53
54	24.82	26.98	29.14	0.00005	0.00075	..	0.00062	54
55	31.54	34.28	37.02	0.00005	0.00070	..	0.00055	55
56	39.73	43.19	46.65	0.00005	0.00065	..	0.00049	56

*This maximum bare wire diameter shall be permitted to be exceeded; see 1.4.9.1.
†For metric equivalent, see 1.5.
‡Conductor size tolerance based on resistance; see 1.4.9.2.
NOTE: For direct conversion inches to millimeters, multiply inches by the factor 25.4 (exact). (This note approved as Authorized Engineering Information 3-11-1987.)

Copyright National Electrical Manufacturers Association
Provided by IHS under license with NEMA
No reproduction or networking permitted without license from IHS
Not for Resale

9009279 0001506 729

POLYVINYL ACETAL, HEAVY ENAMELLED ROUND COPPER MAGNET WIRE THERMAL CLASS 105

INSULATING MATERIALS. The coating is based on a blend of polyvinyl acetal and phenolic resins (1.2.2.2).

THERMAL CLASS. 105°C when tested in accordance with Part 1, para. 1.6 and Part 3, para. 3.58.1.1.

GENERAL REQUIREMENTS. See Part 1.

Characteristics	Test Procedure, See Part 3, Paragraph	Requirements
1. DIMENSIONS	3.1.1.1	See Table H (MW 15-C)
2. ADHERENCE AND FLEXIBILITY	3.2.1.1	No cracks visible in the film coating
3. ELONGATION	3.3.1.1	Not less than value in Table H (MW 15-C)
4. HEAT SHOCK	3.4.1.1	No cracks visible in the film coating after conditioning at 175°C
6. SPRINGBACK	3.6.1.1 3.6.2.1	Not greater than value in Table H (MW 15-C) Not greater than 5°
7. DIELECTRIC STRENGTH	3.7.1.1	Not less than value in Table H (MW 15-C)
8. CONTINUITY	3.8.1.1	The number of discontinuities shall not exceed 5 for 14–24 AWG, 7 for 25–30 AWG, 5 for 31–46 AWG, or 10 for 47–50 AWG, when tested in accordance with the following: 14–30 AWG para. 3.8.1.1.1 31–44 AWG para. 3.8.1.1.1 or 3.8.1.1.2 45–50 AWG para. 3.8.1.1.2
9. COMPLETENESS OF CURE	3.9.1.1.1	No swelling or blistering in film coating

PERIODIC CONFORMANCE TESTS

50. THERMOPLASTIC FLOW	3.50.1.1	Median not less than 180°C with heavy film coated 18 or 36 AWG
51. SOLUBILITY	3.51.1.1	A specimen of heavy film coated 18 or 36 AWG immersed in xylene shall not soften sufficiently to expose the bare conductor
52. DIELECTRIC STRENGTH AT RATED TEMPERATURE	3.52.1.1	Heavy film coated wire shall average not less than 4275 volts for 18 AWG or 1900 volts for 36 AWG
54. TRANSFORMER OIL RESISTANCE	3.54.1.1	No cracks or blisters visible in film coating
59. SCRAPE RESISTANCE	3.59.1.1	Lowest "grams-to-fail" load for any one of the three tests and the average of the three tests shall be not less than the values in Table H (MW 15-C)

Copyright National Electrical Manufacturers Association
Provided by IHS under license with NEMA
No reproduction or networking permitted without license from IHS
Not for Resale

POLYVINYL ACETAL, HEAVY ENAMELLED ROUND COPPER MAGNET WIRE THERMAL CLASS 105

Table H (MW 15-C)

AWG Size	Bare Wire Diameter, Inches† Minimum	Nominal	Maximum	Insulation† Minimum Increase in Diameter, Inches	Maximum Overall Diameter, Inches	Elongation, Minimum Percent	Scrape, Grams to Fail Average	Minimum	Springback, Maximum Degrees per Turn	Dielectric Strength, Minimum Breakdown Volts	AWG Size
4	0.2023	0.2043	0.2053*	0.0037	0.2098	38	....	....	..	3700	4
5	0.1801	0.1819	0.1828*	0.0036	0.1872	37	....	....	..	3600	5
6	0.1604	0.1620	0.1628*	0.0035	0.1671	37	....	....	..	3500	6
7	0.1429	0.1443	0.1450*	0.0034	0.1491	36	....	....	..	3400	7
8	0.1272	0.1285	0.1292*	0.0033	0.1332	36	....	....	..	3300	8
9	0.1133	0.1144	0.1150*	0.0032	0.1189	36	....	....	..	3200	9
10	0.1009	0.1019	0.1024*	0.0031	0.1061	35	1490	1270	..	6200	10
11	0.0898	0.0907	0.0912*	0.0030	0.0948	35	1490	1270	..	6000	11
12	0.0800	0.0808	0.0812*	0.0029	0.0847	34	1490	1270	..	5800	12
13	0.0713	0.0720	0.0724*	0.0028	0.0757	34	1490	1270	..	5600	13
14	0.0635	0.0641	0.0644*	0.0032	0.0682	33	1490	1270	42	6325	14
15	0.0565	0.0571	0.0574*	0.0030	0.0609	33	1400	1190	46	6175	15
16	0.0503	0.0508	0.0511*	0.0029	0.0545	33	1310	1115	50	6000	16
17	0.0448	0.0453	0.0455*	0.0028	0.0488	32	1230	1045	54	5850	17
18	0.0399	0.0403	0.0405*	0.0026	0.0437	32	1150	980	58	5700	18
19	0.0355	0.0359	0.0361*	0.0025	0.0391	31	1070	910	62	5550	19
20	0.0317	0.0320	0.0322*	0.0023	0.0351	30	1000	850	66	5400	20
21	0.0282	0.0285	0.0286*	0.0022	0.0314	30	940	800	53	5250	21
22	0.0250	0.0253	0.0254*	0.0021	0.0281	29	880	750	58	5125	22
23	0.0224	0.0226	0.0227*	0.0020	0.0253	29	820	700	62	5000	23
24	0.0199	0.0201	0.0202*	0.0019	0.0227	28	770	655	67	4850	24
25	0.0177	0.0179	0.0180*	0.0018	0.0203	28	720	615	72	4725	25
26	0.0157	0.0159	0.0160*	0.0017	0.0182	27	675	575	76	4600	26
27	0.0141	0.0142	0.0143	0.0016	0.0164	27	635	540	50	4500	27
28	0.0125	0.0126	0.0127	0.0016	0.0147	26	595	510	55	4375	28
29	0.0112	0.0113	0.0114	0.0015	0.0133	26	560	480	61	4250	29
30	0.0099	0.0100	0.0101	0.0014	0.0119	25	525	450	66	4150	30
31	0.0088	0.0089	0.0090	0.0013	0.0108	24	...	...	..	3825	31
32	0.0079	0.0080	0.0081	0.0012	0.0098	24	...	...	..	3525	32
33	0.0070	0.0071	0.0072	0.0011	0.0088	23	...	...	..	3250	33
34	0.0062	0.0063	0.0064	0.0010	0.0078	22	...	...	..	2975	34
35	0.0055	0.0056	0.0057	0.0009	0.0070	21	...	...	..	2750	35
36	0.0049	0.0050	0.0051	0.0008	0.0063	20	...	...	..	2525	36
37	0.0044	0.0045	0.0046	0.0008	0.0057	20	...	...	..	2325	37
38	0.0039	0.0040	0.0041	0.0007	0.0051	19	...	...	..	2150	38
39	0.0034	0.0035	0.0036	0.0006	0.0045	18	...	...	..	1975	39
40	0.0030	0.0031	0.0032	0.0006	0.0040	17	...	...	..	1800	40
41	0.0027	0.0028	0.0029	0.0005	0.0036	17	...	...	..	1675	41
42	0.0024	0.0025	0.0026	0.0004	0.0032	16	...	...	..	1525	42
43	0.0021	0.0022	0.0023	0.0004	0.0029	15	...	...	..	1400	43
44	0.0019	0.0020	0.0021	0.0004	0.0027	14	...	...	..	1300	44

AWG Size	Conductor Resistance at 20°C, Ohms per Foot †, ‡ Minimum	Nominal	Maximum	Insulation† Minimum Increase in Diameter, Inches	Maximum Overall Diameter, Inches	Elongation, Minimum Percent	Theoretical Nominal Bare Wire Diameter, Inches †, ‡	AWG Size
45	3.080	3.348	3.616	0.00030	0.00230	11	0.00176	45
46	3.870	4.207	4.544	0.00030	0.00210	10	0.00157	46
47	4.868	5.291	5.714	0.00030	0.00190	8	0.00140	47
48	6.205	6.745	7.285	0.00020	0.00170	7	0.00124	48
49	7.744	8.417	9.090	0.00020	0.00150	6	0.00111	49
50	9.734	10.58	11.43	0.00020	0.00140	5	0.00099	50

*This maximum bare wire diameter shall be permitted to be exceeded; see 1.4.9.1.
†For metric equivalent, see 1.5.
‡Conductor size tolerance based on resistance; see 1.4.9.2.
NOTE: For direct conversion inches to millimeters, multiply inches by the factor 25.4 (exact). (This note approved as Authorized Engineering

Copyright National Electrical Manufacturers Association
Provided by IHS under license with NEMA
No reproduction or networking permitted without license from IHS
Not for Resale

9009279 0001508 5T1

POLYVINYL ACETAL, TRIPLE ENAMELLED ROUND COPPER MAGNET WIRE THERMAL CLASS 105

INSULATING MATERIALS. The coating is based on a blend of polyvinyl acetal and phenolic resins (1.2.2.2).

THERMAL CLASS. 105°C when tested in accordance with Part 1, para. 1.6 and Part 3, para. 3.58.1.1.

GENERAL REQUIREMENTS. See Part 1.

Characteristics	Test Procedure, See Part 3, Paragraph	Requirements
1. DIMENSIONS	3.1.1.1	See Table T (MW 15-C)
2. ADHERENCE AND FLEXIBILITY	3.2.1.1	No cracks visible in the film coating
3. ELONGATION	3.3.1.1	Not less than value in Table T (MW 15-C)
4. HEAT SHOCK	3.4.1.1	No cracks visible in the film coating after conditioning at 175°C
6. SPRINGBACK	3.6.2.1	Not greater than value in Table T (MW 15-C)
7. DIELECTRIC STRENGTH	3.7.1.1	Not less than value in Table T (MW 15-C)
8. CONTINUITY	3.8.1.1	The number of discontinuities shall not exceed 3 for 14–24 AWG or 5 for 25–30 AWG, when tested in accordance with the following: 14–30 AWG para. 3.8.1.1.1
9. COMPLETENESS OF CURE	3.9.1.1.1	No swelling or blistering in film coating

PERIODIC CONFORMANCE TESTS

50. THERMOPLASTIC FLOW	3.50.1.1	Median not less than 180°C with heavy film coated 18 AWG
51. SOLUBILITY	3.51.1.1	A specimen of heavy film coated 18 AWG immersed in xylene shall not soften sufficiently to expose the bare conductor
52. DIELECTRIC STRENGTH AT RATED TEMPERATURE	3.52.1.1	Heavy film coated wire shall average not less than 4275 volts for 18 AWG
54. TRANSFORMER OIL RESISTANCE	3.54.1.1	No cracks or blisters visible in film coating
59. SCRAPE RESISTANCE	3.59.1.1	Lowest "grams-to-fail" load for any one of the three tests and the average of the three tests shall be not less than the values in Table T (MW 15-C)

Copyright National Electrical Manufacturers Association
Provided by IHS under license with NEMA
No reproduction or networking permitted without license from IHS
Not for Resale

9009279 0001509 438

POLYVINYL ACETAL, TRIPLE ENAMELLED ROUND COPPER MAGNET WIRE THERMAL CLASS 105

Table T (MW 15-C)

AWG Size	Bare Wire Diameter, Inches†			Insulation†		Elongation, Minimum Percent	Scrape, Grams to Fail		Springback, Maximum Degrees per Turn	Dielectric Strength, Minimum Breakdown Volts	AWG Size
	Minimum	Nominal	Maximum	Minimum Increase in Diameter, Inches	Maximum Overall Diameter, Inches		Average	Minimum			
14	0.0635	0.0641	0.0644 *	0.0048	0.0700	33	1735	1475	46	8450	14
15	0.0565	0.0571	0.0574 *	0.0045	0.0627	33	1620	1375	49	8225	15
16	0.0503	0.0508	0.0511 *	0.0043	0.0562	33	1525	1295	53	8000	16
17	0.0448	0.0453	0.0455 *	0.0041	0.0504	32	1425	1210	58	7800	17
18	0.0399	0.0403	0.0405 *	0.0039	0.0452	32	1335	1135	62	7600	18
19	0.0355	0.0359	0.0361 *	0.0037	0.0406	31	1255	1065	66	7400	19
20	0.0317	0.0320	0.0322 *	0.0035	0.0364	30	1180	1000	70	7200	20
21	0.0282	0.0285	0.0286 *	0.0033	0.0326	30	1115	945	53	7025	21
22	0.0250	0.0253	0.0254 *	0.0032	0.0293	29	1045	890	58	6850	22
23	0.0224	0.0226	0.0227 *	0.0030	0.0264	29	975	830	64	6675	23
24	0.0199	0.0201	0.0202 *	0.0029	0.0238	28	910	770	69	6500	24
25	0.0177	0.0179	0.0180 *	0.0027	0.0214	28	850	720	74	6325	25
26	0.0157	0.0159	0.0160 *	0.0026	0.0193	27	795	675	80	6150	26
27	0.0141	0.0142	0.0143	0.0024	0.0173	27	735	625	55	6000	27
28	0.0125	0.0126	0.0127	0.0023	0.0156	26	690	585	60	5850	28
29	0.0112	0.0113	0.0114	0.0022	0.0142	26	645	550	65	5700	29
30	0.0099	0.0100	0.0101	0.0021	0.0128	25	605	515	70	5550	30

*This maximum bare wire diameter shall be permitted to be exceeded; see 1.4.9.1.
†For metric equivalent, see 1.5.
NOTE: For direct conversion inches to millimeters, multiply inches by the factor 25.4 (exact). (This note approved as Authorized Engineering Information 3-11-1987.)

Copyright National Electrical Manufacturers Association
Provided by IHS under license with NEMA
No reproduction or networking permitted without license from IHS
Not for Resale

9009279 0001510 15T

POLYIMIDE, SINGLE ENAMELLED ROUND COPPER MAGNET WIRE THERMAL CLASS 220

INSULATING MATERIALS. The coating is based on polyimide resins (1.2.2.2).

THERMAL CLASS. 220°C when tested in accordance with Part 1, para. 1.6 and Part 3, para. 3.58.1.1.

GENERAL REQUIREMENTS. See Part 1.

Characteristics	Test Procedure, See Part 3, Paragraph	Requirements
1. DIMENSIONS	3.1.1.1	See Table S (MW 16-C)
2. ADHERENCE AND FLEXIBILITY	3.2.1.1	No cracks visible in the film coating
3. ELONGATION	3.3.1.1	Not less than value in Table S (MW 16-C)
4. HEAT SHOCK	3.4.1.1	No cracks visible in the film coating after conditioning at 240°C
6. SPRINGBACK	3.6.1.1	Not greater than value in Table S (MW 16-C)
7. DIELECTRIC STRENGTH	3.7.1.1	Not less than value in Table S (MW 16-C)
8. CONTINUITY	3.8.1.1	The number of discontinuities shall not exceed 25 when tested in accordance with the following: 14–30 AWG para. 3.8.1.1.1 31–44 AWG para. 3.8.1.1.1 or 3.8.1.1.2 45–50 AWG para. 3.8.1.1.2
9. COMPLETENESS OF CURE	3.9.1.1.2	Dissipation factor not greater than 0.60 percent

PERIODIC CONFORMANCE TESTS

50. THERMOPLASTIC FLOW	3.50.1.1	Median not less than 400°C with heavy film coated 18 or 36 AWG
51. SOLUBILITY	3.51.1.1	Two specimens of heavy film coated 18 or 36 AWG immersed in: xylene 50/50 xylene/ethyl Cellosolve shall not soften sufficiently to expose the bare conductor
52. DIELECTRIC STRENGTH AT RATED TEMPERATURE	3.52.1.1	Heavy film coated wire shall average not less than 4275 volts for 18 AWG or 1900 volts for 36 AWG
59. SCRAPE RESISTANCE	3.59.1.1	Lowest "grams-to-fail" load for any one of the three tests and the average of the three tests shall be not less than the values in Table S (MW 16-C)

Copyright National Electrical Manufacturers Association
Provided by IHS under license with NEMA
No reproduction or networking permitted without license from IHS
Not for Resale

9009279 0001511 096

POLYIMIDE, SINGLE ENAMELLED ROUND COPPER MAGNET WIRE THERMAL CLASS 220

Table S (MW 16-C)

AWG Size	Bare Wire Diameter, Inches † Minimum	Nominal	Maximum	Insulation † Minimum Increase in Diameter, Inches	Maximum Overall Diameter, Inches	Elongation, Minimum Percent	Scrape, Grams to Fail Average	Minimum	Springback, Maximum Degrees per Turn	Dielectric Strength, Minimum Breakdown Volts	AWG Size
14	0.0635	0.0641	0.0644 *	0.0016	0.0666	33	545	465	42	3525	14
15	0.0565	0.0571	0.0574 *	0.0015	0.0594	33	510	430	46	3425	15
16	0.0503	0.0508	0.0511 *	0.0014	0.0531	33	475	405	50	3325	16
17	0.0448	0.0453	0.0455 *	0.0014	0.0475	32	445	380	54	3250	17
18	0.0399	0.0403	0.0405 *	0.0013	0.0424	32	420	355	58	3175	18
19	0.0355	0.0359	0.0361 *	0.0012	0.0379	31	390	335	62	3075	19
20	0.0317	0.0320	0.0322 *	0.0012	0.0339	30	370	315	66	3000	20
21	0.0282	0.0285	0.0286 *	0.0011	0.0303	30	345	295	53	2925	21
22	0.0250	0.0253	0.0254 *	0.0011	0.0270	29	325	275	58	2850	22
23	0.0224	0.0226	0.0227 *	0.0010	0.0243	29	300	255	62	2775	23
24	0.0199	0.0201	0.0202 *	0.0010	0.0217	28	285	245	67	2700	24
25	0.0177	0.0179	0.0180 *	0.0009	0.0194	28	265	225	72	2625	25
26	0.0157	0.0159	0.0160 *	0.0009	0.0173	27	245	210	76	2550	26
27	0.0141	0.0142	0.0143	0.0008	0.0156	27	230	200	50	2500	27
28	0.0125	0.0126	0.0127	0.0008	0.0140	26	215	185	55	2425	28
29	0.0112	0.0113	0.0114	0.0007	0.0126	26	200	170	61	2375	29
30	0.0099	0.0100	0.0101	0.0007	0.0112	25	190	160	66	2300	30
31	0.0088	0.0089	0.0090	0.0006	0.0100	24	...	...	..	2075	31
32	0.0079	0.0080	0.0081	0.0006	0.0091	24	...	...	..	1850	32
33	0.0070	0.0071	0.0072	0.0005	0.0081	23	...	...	..	1675	33
34	0.0062	0.0063	0.0064	0.0005	0.0072	22	...	...	..	1500	34
35	0.0055	0.0056	0.0057	0.0004	0.0064	21	...	...	..	1325	35
36	0.0049	0.0050	0.0051	0.0004	0.0058	20	...	...	..	1200	36
37	0.0044	0.0045	0.0046	0.0003	0.0052	20	...	...	..	1075	37
38	0.0039	0.0040	0.0041	0.0003	0.0047	19	...	...	..	950	38
39	0.0034	0.0035	0.0036	0.0002	0.0041	18	...	...	..	850	39
40	0.0030	0.0031	0.0032	0.0002	0.0037	17	...	...	..	775	40
41	0.0027	0.0028	0.0029	0.0002	0.0033	17	...	...	..	700	41
42	0.0024	0.0025	0.0026	0.0002	0.0030	16	...	...	..	625	42
43	0.0021	0.0022	0.0023	0.0002	0.0026	15	...	...	..	550	43
44	0.0019	0.0020	0.0021	0.0001	0.0024	14	...	...	..	500	44
	Conductor Resistance at 20°C, Ohms per Foot †, ‡ Minimum	Nominal	Maximum				Theoretical Nominal Bare Wire Diameter, Inches †, ‡				
45	3.080	3.348	3.616	0.00010	0.00205	11	0.00176				45
46	3.870	4.207	4.544	0.00010	0.00185	10	0.00157				46
47	4.868	5.291	5.714	0.00010	0.00170	8	0.00140				47
48	6.205	6.745	7.285	0.00010	0.00150	7	0.00124				48
49	7.744	8.417	9.090	0.00010	0.00130	6	0.00111				49
50	9.734	10.58	11.43	0.00010	0.00120	5	0.00099				50

*This maximum bare wire diameter shall be permitted to be exceeded; see 1.4.9.1.
†For metric equivalent, see 1.5.
‡Conductor size tolerance based on resistance; see 1.4.9.2.
NOTE: For direct conversion inches to millimeters, multiply inches by the factor 25.4 (exact). (This note approved as Authorized Engineering Information 3-11-1987.)

Copyright National Electrical Manufacturers Association
Provided by IHS under license with NEMA
No reproduction or networking permitted without license from IHS
Not for Resale

9009279 0001512 T22

POLYIMIDE, HEAVY
ENAMELLED ROUND COPPER MAGNET WIRE
THERMAL CLASS 220

INSULATING MATERIALS. The coating is based on polyimide resins (1.2.2.2).

THERMAL CLASS. 220°C when tested in accordance with Part 1, para. 1.6 and Part 3, para. 3.58.1.1.

GENERAL REQUIREMENTS. See Part 1.

Characteristics	Test Procedure, See Part 3, Paragraph	Requirements
1. DIMENSIONS	3.1.1.1	See Table H (MW 16-C)
2. ADHERENCE AND FLEXIBILITY	3.2.1.1	No cracks visible in the film coating
3. ELONGATION	3.3.1.1	Not less than value in Table H (MW 16-C)
4. HEAT SHOCK	3.4.1.1	No cracks visible in the film coating after conditioning at 240°C
6. SPRINGBACK	3.6.1.1 3.6.2.1	Not greater than value in Table H (MW 16-C) Not greater than 5°
7. DIELECTRIC STRENGTH	3.7.1.1	Not less than value in Table H (MW 16-C)
8. CONTINUITY	3.8.1.1	The number of discontinuities shall not exceed 5 for 14–24 AWG, 7 for 25–30 AWG, 5 for 31–46 AWG, or 10 for 47–50 AWG, when tested in accordance with the following: 14–30 AWG para. 3.8.1.1.1 31–44 AWG para. 3.8.1.1.1 or 3.8.1.1.2 45–50 AWG para. 3.8.1.1.2
9. COMPLETENESS OF CURE	3.9.1.1.2	Dissipation factor not greater than 0.60 percent

PERIODIC CONFORMANCE TESTS

50. THERMOPLASTIC FLOW	3.50.1.1	Median not less than 400°C with heavy film coated 18 or 36 AWG
51. SOLUBILITY	3.51.1.1	Two specimens of heavy film coated 18 or 36 AWG immersed in: xylene 50/50 xylene/ethyl Cellosolve shall not soften sufficiently to expose the bare conductor
52. DIELECTRIC STRENGTH AT RATED TEMPERATURE	3.52.1.1	Heavy film coated wire shall average not less than 4275 volts for 18 AWG or 1900 volts for 36 AWG
59. SCRAPE RESISTANCE	3.59.1.1	Lowest "grams-to-fail" load for any one of the three tests and the average of the three tests shall be not less than the values in Table H (MW 16-C)

Copyright National Electrical Manufacturers Association
Provided by IHS under license with NEMA
No reproduction or networking permitted without license from IHS
Not for Resale

POLYIMIDE, HEAVY
ENAMELLED ROUND COPPER MAGNET WIRE
THERMAL CLASS 220
Table H (MW 16-C)

AWG Size	Bare Wire Diameter, Inches† Minimum	Nominal	Maximum	Insulation† Minimum Increase in Diameter, Inches	Maximum Overall Diameter, Inches	Elongation, Minimum Percent	Scrape, Grams to Fail Average	Minimum	Springback, Maximum Degrees per Turn	Dielectric Strength, Minimum Breakdown Volts	AWG Size
4	0.2023	0.2043	0.2053*	0.0037	0.2098	38	....	...	..	3700	4
5	0.1801	0.1819	0.1828*	0.0036	0.1872	37	....	...	..	3600	5
6	0.1604	0.1620	0.1628*	0.0035	0.1671	37	....	...	..	3500	6
7	0.1429	0.1443	0.1450*	0.0034	0.1491	36	....	...	..	3400	7
8	0.1272	0.1285	0.1292*	0.0033	0.1332	36	....	...	..	3300	8
9	0.1133	0.1144	0.1150*	0.0032	0.1189	36	....	...	..	3200	9
10	0.1009	0.1019	0.1024*	0.0031	0.1061	35	1090	925	..	6200	10
11	0.0898	0.0907	0.0912*	0.0030	0.0948	35	1090	925	..	6000	11
12	0.0800	0.0808	0.0812*	0.0029	0.0847	34	1090	925	..	5800	12
13	0.0713	0.0720	0.0724*	0.0028	0.0757	34	1090	925	..	5600	13
14	0.0635	0.0641	0.0644*	0.0032	0.0682	33	1090	925	42	6325	14
15	0.0565	0.0571	0.0574*	0.0030	0.0609	33	1015	865	46	6175	15
16	0.0503	0.0508	0.0511*	0.0029	0.0545	33	955	810	50	6000	16
17	0.0448	0.0453	0.0455*	0.0028	0.0488	32	890	755	54	5850	17
18	0.0399	0.0403	0.0405*	0.0026	0.0437	32	835	710	58	5700	18
19	0.0355	0.0359	0.0361*	0.0025	0.0391	31	785	665	62	5550	19
20	0.0317	0.0320	0.0322*	0.0023	0.0351	30	740	630	66	5400	20
21	0.0282	0.0285	0.0286*	0.0022	0.0314	30	695	595	53	5250	21
22	0.0250	0.0253	0.0254*	0.0021	0.0281	29	650	550	58	5125	22
23	0.0224	0.0226	0.0227*	0.0020	0.0253	29	605	515	62	5000	23
24	0.0199	0.0201	0.0202*	0.0019	0.0227	28	565	485	67	4850	24
25	0.0177	0.0179	0.0180*	0.0018	0.0203	28	530	450	72	4725	25
26	0.0157	0.0159	0.0160*	0.0017	0.0182	27	495	425	76	4600	26
27	0.0141	0.0142	0.0143	0.0016	0.0164	27	460	395	50	4500	27
28	0.0125	0.0126	0.0127	0.0016	0.0147	26	435	370	55	4375	28
29	0.0112	0.0113	0.0114	0.0015	0.0133	26	405	340	61	4250	29
30	0.0099	0.0100	0.0101	0.0014	0.0119	25	380	325	66	4150	30
31	0.0088	0.0089	0.0090	0.0013	0.0108	24	...	...	..	3825	31
32	0.0079	0.0080	0.0081	0.0012	0.0098	24	...	...	..	3525	32
33	0.0070	0.0071	0.0072	0.0011	0.0088	23	...	...	..	3250	33
34	0.0062	0.0063	0.0064	0.0010	0.0078	22	...	...	..	2975	34
35	0.0055	0.0056	0.0057	0.0009	0.0070	21	...	...	..	2750	35
36	0.0049	0.0050	0.0051	0.0008	0.0063	20	...	...	..	2525	36
37	0.0044	0.0045	0.0046	0.0008	0.0057	20	...	...	..	2325	37
38	0.0039	0.0040	0.0041	0.0007	0.0051	19	...	...	..	2150	38
39	0.0034	0.0035	0.0036	0.0006	0.0045	18	...	...	..	1975	39
40	0.0030	0.0031	0.0032	0.0006	0.0040	17	...	...	..	1800	40
41	0.0027	0.0028	0.0029	0.0005	0.0036	17	...	...	..	1675	41
42	0.0024	0.0025	0.0026	0.0004	0.0032	16	...	...	..	1525	42
43	0.0021	0.0022	0.0023	0.0004	0.0029	15	...	...	..	1400	43
44	0.0019	0.0020	0.0021	0.0004	0.0027	14	...	...	..	1300	44

AWG Size	Conductor Resistance at 20°C, Ohms per Foot †, ‡ Minimum	Nominal	Maximum				Theoretical Nominal Bare Wire Diameter, Inches †, ‡	AWG Size
45	3.080	3.348	3.616	0.00030	0.00230	11	0.00176	45
46	3.870	4.207	4.544	0.00030	0.00210	10	0.00157	46
47	4.868	5.291	5.714	0.00030	0.00190	8	0.00140	47
48	6.205	6.745	7.285	0.00020	0.00170	7	0.00124	48
49	7.744	8.417	9.090	0.00020	0.00150	6	0.00111	49
50	9.734	10.58	11.43	0.00020	0.00140	5	0.00099	50

*This maximum bare diameter shall be permitted to be exceeded; see 1.4.9.1.
†For metric equivalents, see 1.5.
‡Conductor size tolerance based on resistance; see 1.4.9.2.
NOTE: For direct conversion of inches to millimeters, multiply inches by the factor 25.4 (exact). (This note approved as Authorized Engineering [illegible]37.)

Copyright National Electrical Manufacturers Association
Provided by IHS under license with NEMA
No reproduction or networking permitted without license from IHS
Not for Resale

9009279 0001514 8T5

POLYIMIDE, TRIPLE ENAMELLED ROUND COPPER MAGNET WIRE THERMAL CLASS 220

INSULATING MATERIALS. The coating is based on polyimide resins (1.2.2.2).

THERMAL CLASS. 220°C when tested in accordance with Part 1, para. 1.6 and Part 3, para. 3.58.1.1.

GENERAL REQUIREMENTS. See Part 1.

Characteristics	Test Procedure, See Part 3, Paragraph	Requirements
1. DIMENSIONS	3.1.1.1	See Table T (MW 16-C)
2. ADHERENCE AND FLEXIBILITY	3.2.1.1	No cracks visible in the film coating
3. ELONGATION	3.3.1.1	Not less than value in Table T (MW 16-C)
4. HEAT SHOCK	3.4.1.1	No cracks visible in the film coating after conditioning at 240°C
6. SPRINGBACK	3.6.1.1	Not greater than value in Table T (MW 16-C)
7. DIELECTRIC STRENGTH	3.7.1.1	Not less than value in Table T (MW 16-C)
8. CONTINUITY	3.8.1.1	The number of discontinuities shall not exceed 3 for 14–24 AWG or 5 for 25–30 AWG when tested in accordance with the following: 14–30 AWG para. 3.8.1.1.1
9. COMPLETENESS OF CURE	3.9.1.1.2	Dissipation factor not greater than 0.60 percent

PERIODIC CONFORMANCE TESTS

50. THERMOPLASTIC FLOW	3.50.1.1	Median not less than 400°C with heavy film coated 18 AWG
51. SOLUBILITY	3.51.1.1	Two specimens of heavy film coated 18 AWG immersed in: xylene 50/50 xylene/ethyl Cellosolve shall not soften sufficiently to expose the bare conductor
52. DIELECTRIC STRENGTH AT RATED TEMPERATURE	3.52.1.1	Heavy film coated wire shall average not less than 4275 volts for 18 AWG
59. SCRAPE RESISTANCE	3.59.1.1	Lowest "grams-to-fail" load for any one of the three tests and the average of the three tests shall be not less than the values in Table T (MW 16-C)

Copyright National Electrical Manufacturers Association
Provided by IHS under license with NEMA
No reproduction or networking permitted without license from IHS
Not for Resale

POLYIMIDE, TRIPLE ENAMELLED ROUND COPPER MAGNET WIRE THERMAL CLASS 220

Table T (MW 16-C)

AWG Size	Bare Wire Diameter, Inches†			Insulation†		Elongation, Minimum Percent	Scrape, Grams to Fail		Springback, Maximum Degrees per Turn	Dielectric Strength, Minimum Breakdown Volts	AWG Size
	Minimum	Nominal	Maximum	Minimum Increase in Diameter, Inches	Maximum Overall Diameter, Inches		Average	Minimum			
14	0.0635	0.0641	0.0644 *	0.0048	0.0700	33	1360	1150	46	8450	14
15	0.0565	0.0571	0.0574 *	0.0045	0.0627	33	1270	1080	49	8225	15
16	0.0503	0.0508	0.0511 *	0.0043	0.0562	33	1190	1010	53	8000	16
17	0.0448	0.0453	0.0455 *	0.0041	0.0504	32	1115	945	58	7800	17
18	0.0399	0.0403	0.0405 *	0.0039	0.0452	32	1045	890	62	7600	18
19	0.0355	0.0359	0.0361 *	0.0037	0.0406	31	980	830	66	7400	19
20	0.0317	0.0320	0.0322 *	0.0035	0.0364	30	920	785	70	7200	20
21	0.0282	0.0285	0.0286 *	0.0033	0.0326	30	865	736	53	7025	21
22	0.0250	0.0253	0.0254 *	0.0032	0.0293	29	810	690	58	6850	22
23	0.0224	0.0226	0.0227 *	0.0030	0.0264	29	755	645	64	6675	23
24	0.0199	0.0201	0.0202 *	0.0029	0.0238	28	710	606	69	6500	24
25	0.0177	0.0179	0.0180 *	0.0027	0.0214	28	665	565	74	6325	25
26	0.0157	0.0159	0.0160 *	0.0026	0.0193	27	620	530	80	6150	26
27	0.0141	0.0142	0.0143	0.0024	0.0173	27	575	490	55	6000	27
28	0.0125	0.0126	0.0127	0.0023	0.0156	26	540	460	60	5850	28
29	0.0112	0.0113	0.0114	0.0022	0.0142	26	505	425	65	5700	29
30	0.0099	0.0100	0.0101	0.0021	0.0128	25	470	395	70	5550	30

*This maximum bare wire diameter shall be permitted to be exceeded; see 1.4.9.1.
†For metric equivalents, see 1.5.
NOTE: For direct conversion of inches to millimeters, multiply inches by the factor 25.4 (exact). (This note approved as Authorized Engineering Information 3-11-1987.)

Copyright National Electrical Manufacturers Association
Provided by IHS under license with NEMA
No reproduction or networking permitted without license from IHS
Not for Resale

9009279 0001516 678

POLYVINYL ACETAL OVERCOATED WITH POLYAMIDE, SINGLE ENAMELLED ROUND COPPER MAGNET WIRE THERMAL CLASS 105

INSULATING MATERIALS. The conductor shall be coated with a dual film. The underlying coating is based on a blend of polyvinyl acetal and phenolic resins (1.2.2.2). The superimposed coating is based on polyamide resins (1.2.2.2).

THERMAL CLASS. 105°C when tested in accordance with Part 1, para. 1.6 and Part 3, para. 3.58.1.1.

GENERAL REQUIREMENTS. See Part 1.

Characteristics	Test Procedure, See Part 3, Paragraph	Requirements
1. DIMENSIONS	3.1.1.1	See Table S (MW 17-C)
2. ADHERENCE AND FLEXIBILITY	3.2.1.1	No cracks visible in the film coating
3. ELONGATION	3.3.1.1	Not less than value in Table S (MW 17-C)
4. HEAT SHOCK	3.4.1.1	No cracks visible in the film coating after conditioning at 175°C
6. SPRINGBACK	3.6.1.1	Not greater than value in Table S (MW 17-C)
7. DIELECTRIC STRENGTH	3.7.1.1	Not less than value in Table S (MW 17-C)
8. CONTINUITY	3.8.1.1	The number of discontinuities shall not exceed 25 when tested in accordance with the following: 14–30 AWG para. 3.8.1.1.1 31–44 AWG para. 3.8.1.1.1 or 3.8.1.1.2
PERIODIC CONFORMANCE TESTS		
50. THERMOPLASTIC FLOW	3.50.1.1	Median not less than 180°C with heavy film coated 18 or 36 AWG
51. SOLUBILITY	3.51.1.1	A specimen of heavy film coated 18 or 36 AWG immersed in xylene shall not soften sufficiently to expose the bare conductor
52. DIELECTRIC STRENGTH AT RATED TEMPERATURE	3.52.1.1	Heavy film coated wire shall average not less than 3825 volts for 18 AWG or 1725 volts for 36 AWG
59. SCRAPE RESISTANCE	3.59.1.1	Lowest "grams-to-fail" load for any one of the three tests and the average of the three tests shall be not less than the values in Table S (MW 17-C)

Copyright National Electrical Manufacturers Association
Provided by IHS under license with NEMA
No reproduction or networking permitted without license from IHS
Not for Resale

9009279 0001517 504

POLYVINYL ACETAL OVERCOATED WITH POLYAMIDE, SINGLE ENAMELLED ROUND COPPER MAGNET WIRE THERMAL CLASS 105

Table S (MW 17-C)

AWG Size	Bare Wire Diameter, Inches†			Insulation†		Elongation, Minimum Percent	Scrape, Grams to Fail		Springback, Maximum Degrees per Turn	Dielectric Strength, Minimum Breakdown Volts	AWG Size
	Minimum	Nominal	Maximum	Minimum Increase in Diameter, Inches	Maximum Overall Diameter, Inches		Average	Minimum			
14	0.0635	0.0641	0.0644*	0.0016	0.0666	33	840	715	42	3175	14
15	0.0565	0.0571	0.0574*	0.0015	0.0594	33	780	665	46	3075	15
16	0.0503	0.0508	0.0511*	0.0014	0.0531	33	735	625	50	3000	16
17	0.0448	0.0453	0.0455*	0.0014	0.0475	32	690	585	54	2925	17
18	0.0399	0.0403	0.0405*	0.0013	0.0424	32	645	550	58	2850	18
19	0.0355	0.0359	0.0361*	0.0012	0.0379	31	600	510	62	2775	19
20	0.0317	0.0320	0.0322*	0.0012	0.0339	30	560	475	66	2700	20
21	0.0282	0.0285	0.0286*	0.0011	0.0303	30	525	445	53	2625	21
22	0.0250	0.0253	0.0254*	0.0011	0.0270	29	490	415	58	2575	22
23	0.0224	0.0226	0.0227*	0.0010	0.0243	29	460	390	62	2500	23
24	0.0199	0.0201	0.0202*	0.0010	0.0217	28	430	365	67	2425	24
25	0.0177	0.0179	0.0180*	0.0009	0.0194	28	400	340	72	2375	25
26	0.0157	0.0159	0.0160*	0.0009	0.0173	27	380	325	76	2300	26
27	0.0141	0.0142	0.0143	0.0008	0.0156	27	355	300	50	2250	27
28	0.0125	0.0126	0.0127	0.0008	0.0140	26	335	285	55	2175	28
29	0.0112	0.0113	0.0114	0.0007	0.0126	26	310	265	61	2150	29
30	0.0099	0.0100	0.0101	0.0007	0.0112	25	295	250	66	2075	30
31	0.0088	0.0089	0.0090	0.0006	0.0100	24	...	...	..	1875	31
32	0.0079	0.0080	0.0081	0.0006	0.0091	24	...	...	..	1675	32
33	0.0070	0.0071	0.0072	0.0005	0.0081	23	...	...	..	1500	33
34	0.0062	0.0063	0.0064	0.0005	0.0072	22	...	...	..	1350	34
35	0.0055	0.0056	0.0057	0.0004	0.0064	21	...	...	..	1200	35
36	0.0049	0.0050	0.0051	0.0004	0.0058	20	...	...	..	1075	36
37	0.0044	0.0045	0.0046	0.0003	0.0052	20	...	...	..	975	37
38	0.0039	0.0040	0.0041	0.0003	0.0047	19	...	...	..	850	38
39	0.0034	0.0035	0.0036	0.0002	0.0041	18	...	...	..	775	39
40	0.0030	0.0031	0.0032	0.0002	0.0037	17	...	...	..	700	40
41	0.0027	0.0028	0.0029	0.0002	0.0033	17	...	...	..	625	41
42	0.0024	0.0025	0.0026	0.0002	0.0030	16	...	...	..	575	42
43	0.0021	0.0022	0.0023	0.0002	0.0026	15	...	...	..	500	43
44	0.0019	0.0020	0.0021	0.0001	0.0024	14	...	...	..	450	44

*This maximum bare diameter shall be permitted to be exceeded; see 1.4.9.1.
†For metric equivalents, see 1.5.
NOTE: For direct conversion of inches to millimeters, multiply inches by the factor 25.4 (exact). (This note approved as Authorized Engineering Information 3-11-1987.)

Copyright National Electrical Manufacturers Association
Provided by IHS under license with NEMA
No reproduction or networking permitted without license from IHS
Not for Resale

9009279 0001518 440

POLYVINYL ACETAL OVERCOATED WITH POLYAMIDE, HEAVY ENAMELLED ROUND COPPER MAGNET WIRE THERMAL CLASS 105

INSULATING MATERIALS. The conductor shall be coated with a dual film. The underlying coating is based on a blend of polyvinyl acetal and phenolic resins (1.2.2.2). The superimposed coating is based on polyamide resins (1.2.2.2).

THERMAL CLASS. 105°C when tested in accordahce with Part 1, para. 1.6 and Part 3, para. 3.58.1.1.

GENERAL REQUIREMENTS. See Part 1.

Characteristics	Test Procedure, See Part 3, Paragraph	Requirements
1. DIMENSIONS	3.1.1.1	See Table H (MW 17-C)
2. ADHERENCE AND FLEXIBILITY	3.2.1.1	No cracks visible in the film coating
3. ELONGATION	3.3.1.1	Not less than value in Table H (MW 17-C)
4. HEAT SHOCK	3.4.1.1	No cracks visible in the film coating after conditioning at 175°C
6. SPRINGBACK	3.6.1.1	Not greater than value in Table H (MW 17-C)
7. DIELECTRIC STRENGTH	3.7.1.1	Not less than value in Table H (MW 17-C)
8. CONTINUITY	3.8.1.1	The number of discontinuities shall not exceed 5 for 14–24 AWG, 7 for 25–30 AWG, or 5 for 31–44 AWG, when tested in accordance with the following: 14–30 AWG para. 3.8.1.1.1 31–44 AWG para. 3.8.1.1.1 or 3.8.1.1.2

PERIODIC CONFORMANCE TESTS

50. THERMOPLASTIC FLOW	3.50.1.1	Median not less than 180°C with heavy film coated 18 or 36 AWG
51. SOLUBILITY	3.51.1.1	A specimen of heavy film coated 18 or 36 AWG immersed in xylene shall not soften sufficiently to expose the bare conductor
52. DIELECTRIC STRENGTH AT RATED TEMPERATURE	3.52.1.1	Heavy film coated wire shall average not less than 3825 volts for 18 AWG or 1725 volts for 36 AWG
59. SCRAPE RESISTANCE	3.59.1.1	Lowest "grams-to-fail" load for any one of the three tests and the average of the three tests shall be not less than the values in Table H (MW 17-C)

Copyright National Electrical Manufacturers Association
Provided by IHS under license with NEMA
No reproduction or networking permitted without license from IHS
Not for Resale

9009279 0001519 387

POLYVINYL ACETAL OVERCOATED WITH POLYAMIDE, HEAVY ENAMELLED ROUND COPPER MAGNET WIRE THERMAL CLASS 105

Table H (MW 17-C)

AWG Size	Bare Wire Diameter, Inches†			Insulation†		Elongation, Minimum Percent	Scrape, Grams to Fail		Springback, Maximum Degrees per Turn	Dielectric Strength, Minimum Breakdown Volts	AWG Size
	Minimum	Nominal	Maximum	Minimum Increase in Diameter, Inches	Maximum Overall Diameter, Inches		Average	Minimum			
14	0.0635	0.0641	0.0644*	0.0032	0.0682	33	1490	1270	42	5700	14
15	0.0565	0.0571	0.0574*	0.0030	0.0609	33	1400	1190	46	5550	15
16	0.0503	0.0508	0.0511*	0.0029	0.0545	33	1310	1115	50	5400	16
17	0.0448	0.0453	0.0455*	0.0028	0.0488	32	1230	1045	54	5275	17
18	0.0399	0.0403	0.0405*	0.0026	0.0437	32	1150	980	58	5125	18
19	0.0355	0.0359	0.0361*	0.0025	0.0391	31	1070	910	62	5000	19
20	0.0317	0.0320	0.0322*	0.0023	0.0351	30	1000	850	66	4850	20
21	0.0282	0.0285	0.0286*	0.0022	0.0314	30	940	800	53	4725	21
22	0.0250	0.0253	0.0254*	0.0021	0.0281	29	880	750	58	4625	22
23	0.0224	0.0226	0.0227*	0.0020	0.0253	29	820	700	62	4500	23
24	0.0199	0.0201	0.0202*	0.0019	0.0227	28	770	655	67	4375	24
25	0.0177	0.0179	0.0180*	0.0018	0.0203	28	720	615	72	4250	25
26	0.0157	0.0159	0.0160*	0.0017	0.0182	27	675	575	76	4150	26
27	0.0141	0.0142	0.0143	0.0016	0.0164	27	635	540	50	4050	27
28	0.0125	0.0126	0.0127	0.0016	0.0147	26	595	510	55	3950	28
29	0.0112	0.0113	0.0114	0.0015	0.0133	26	560	480	61	3825	29
30	0.0099	0.0100	0.0101	0.0014	0.0119	25	525	450	66	3725	30
31	0.0088	0.0089	0.0090	0.0013	0.0108	24	...	...	..	3450	31
32	0.0079	0.0080	0.0081	0.0012	0.0098	24	...	...	..	3175	32
33	0.0070	0.0071	0.0072	0.0011	0.0088	23	...	...	..	2925	33
34	0.0062	0.0063	0.0064	0.0010	0.0078	22	...	...	..	2675	34
35	0.0055	0.0056	0.0057	0.0009	0.0070	21	...	...	..	2475	35
36	0.0049	0.0050	0.0051	0.0008	0.0063	20	...	...	..	2275	36
37	0.0044	0.0045	0.0046	0.0008	0.0057	20	...	...	..	2100	37
38	0.0039	0.0040	0.0041	0.0007	0.0051	19	...	...	..	1925	38
39	0.0034	0.0035	0.0036	0.0006	0.0045	18	...	...	..	1775	39
40	0.0030	0.0031	0.0032	0.0006	0.0040	17	...	...	..	1625	40
41	0.0027	0.0028	0.0029	0.0005	0.0036	17	...	...	..	1500	41
42	0.0024	0.0025	0.0026	0.0004	0.0032	16	...	...	..	1375	42
43	0.0021	0.0022	0.0023	0.0004	0.0029	15	...	...	..	1250	43
44	0.0019	0.0020	0.0021	0.0004	0.0027	14	...	...	..	1175	44

*This maximum bare diameter shall be permitted to be exceeded; see 1.4.9.1.
†For metric equivalents, see 1.5.
NOTE: For direct conversion of inches to millimeters, multiply inches by the factor 25.4 (exact). (This note approved as Authorized Engineering Information 3-11-1987.)

Copyright National Electrical Manufacturers Association
Provided by IHS under license with NEMA
No reproduction or networking permitted without license from IHS
Not for Resale

9009279 0001520 0T9

POLYVINYL ACETAL, HEAVY AND QUADRUPLE ENAMELLED RECTANGULAR AND SQUARE ALUMINUM MAGNET WIRE THERMAL CLASS 105

INSULATING MATERIALS. The coating is based on a blend of polyvinyl acetal and phenolic resins (1.2.2.2).

THERMAL CLASS. 105°C when tested in accordance with Part 1, para. 1.6 and Part 3, para. 3.58.2.1.

GENERAL REQUIREMENTS. See Part 1.

Characteristics	Test Procedure, See Part 3, Paragraph	Requirements
1. DIMENSIONS	3.1.2.1	Rectangular Wire: a. Dimensions and radii—see Table 1-13 b. Thickness and width tolerances—see Table 1-14 c. Increase in thickness and width due to film coating—see Table TW (MW 18-A) Square Wire: Bare wire dimensions and tolerances, radii, and increase in dimensions due to film coating—see Table SQ (MW 18-A)
2. ADHERENCE AND FLEXIBILITY	3.2.2.1	No cracks visible in the film coating
3. ELONGATION	3.3.2.1	Not less than 15 percent
4. HEAT SHOCK	3.4.2.1	No cracks visible in the film coating after 10 percent elongation followed by conditioning at 150°C ± 3°C
6. SPRINGBACK	3.6.2.1	Not greater than 4°
7. DIELECTRIC STRENGTH	3.7.2.1	Minimum Breakdown Voltage Film Coating: Heavy — Any Three of Four Electrodes: 1500 — Fourth Electrode: 500 Film Coating: Quadruple — Any Three of Four Electrodes: 2500 — Fourth Electrode: 900
9. COMPLETENESS OF CURE	3.9.1.1.1	No swelling or blistering visible in the film coating

PERIODIC CONFORMANCE TESTS

50. THERMOPLASTIC FLOW	3.50.2.1	Median not less than 180°C with heavy film coated 18
51. SOLUBILITY	3.51.2.1	A specimen immersed in xylene shall not soften sufficiently to expose the bare conductor
52. DIELECTRIC STRENGTH AT RATED TEMPERATURE	3.52.2.1	Average not less than 4275 volts with heavy film coated 18 AWG
54. TRANSFORMER OIL RESISTANCE	3.54.2.1	No cracks or blisters visible in the film coating

Copyright National Electrical Manufacturers Association
Provided by IHS under license with NEMA
No reproduction or networking permitted without license from IHS
Not for Resale

9009279 0001521 T35

POLYVINYL ACETAL, HEAVY AND QUADRUPLE ENAMELLED RECTANGULAR AND SQUARE ALUMINUM MAGNET WIRE THERMAL CLASS 105

Table TW (MW 18-A) Rectangular

Increase in Thickness and Width Due to Film Coating

Build	Increase in Width				Increase in Thickness			
	Minimum		Maximum*		Minimum		Maximum*	
	inches	mm	inches	mm	inches	mm	inches	mm
Heavy	0.0025	0.064	0.0045	0.114	0.0030	0.076	0.0050	0.127
Quadruple	0.0040	0.102	0.0060	0.152	0.0050	0.127	0.0070	0.178

*The maximum increase shall be permitted to be exceeded provided the maximum overall dimension of the coated wire does not exceed the sum of the maximum dimension of the bare wire plus the maximum increase due to the coating.

NOTE: For direct conversion inches to millimeters, multiply inches by the factor 25.4 (exact). (This note approved as Authorized Engineering Information 3-11-1987.)

Table SQ (MW 18-A) Square

Dimensions of Square Wire—1 Through 14 AWG

Square AWG Size	Bare Wire Dimensions						Nominal Radii †		Heavy				Quadruple			
	Minimum		Nominal		Maximum				Minimum Increase in Dimension		Maximum Overall Dimension		Minimum Increase in Dimension		Maximum Overall Dimension	
	inches	mm	inches	mm	inches	mm	inches	mm	inches	mm	inches	mm	inches	mm	inches	mm
1	0.2864	7.275	0.2893	7.348	0.2922	7.422	0.040	1.02	0.0030	0.076	0.2972	7.549	0.0050	0.127	0.2992	7.600
2	0.2550	6.477	0.2576	6.543	0.2602	6.609	0.040	1.02	0.0030	0.076	0.2652	6.736	0.0050	0.127	0.2672	6.787
3	0.2271	5.768	0.2294	5.827	0.2317	5.885	0.040	1.02	0.0030	0.076	0.2367	6.012	0.0050	0.127	0.2387	6.063
4	0.2023	5.138	0.2043	5.189	0.2063	5.240	0.040	1.02	0.0030	0.076	0.2113	5.367	0.0050	0.127	0.2133	5.418
5	0.1801	4.575	0.1819	4.620	0.1837	4.666	0.040	1.02	0.0030	0.076	0.1887	4.793	0.0050	0.127	0.1907	4.844
6	0.1604	4.074	0.1620	4.115	0.1636	4.155	0.032	0.81	0.0030	0.076	0.1686	4.282	0.0050	0.127	0.1706	4.333
7	0.1429	3.630	0.1443	3.665	0.1457	3.701	0.032	0.81	0.0030	0.076	0.1507	3.828	0.0050	0.127	0.1527	3.879
8	0.1272	3.231	0.1285	3.264	0.1298	3.297	0.032	0.81	0.0030	0.076	0.1348	3.424	0.0050	0.127	0.1368	3.475
9	0.1133	2.878	0.1144	2.906	0.1155	2.934	0.026	0.66	0.0030	0.076	0.1205	3.061	0.0050	0.127	0.1225	3.112
10	0.1009	2.563	0.1019	2.588	0.1029	2.614	0.026	0.66	0.0030	0.076	0.1079	2.741	0.0050	0.127	0.1099	2.791
11	0.0897	2.278	0.0907	2.304	0.0917	2.329	0.020	0.51	0.0030	0.076	0.0967	2.456	0.0050	0.127	0.0987	2.507
12	0.0798	2.027	0.0808	2.052	0.0818	2.078	0.020	0.51	0.0030	0.076	0.0868	2.205	0.0050	0.127	0.0888	2.256
13	0.0710	1.803	0.0720	1.829	0.0730	1.854	0.016	0.41	0.0030	0.076	0.0780	1.981	0.0050	0.127	0.0800	2.032
14	0.0631	1.603	0.0641	1.628	0.0651	1.654	0.016	0.41	0.0030	0.076	0.0701	1.781	0.0050	0.127	0.0721	1.831

† Radii tolerance is plus or minus 25 percent.

NOTE: For direct conversion inches to millimeters, multiply inches by the factor 25.4 (exact). (This note approved as Authorized Engineering Information 3-11-1987.)

Copyright National Electrical Manufacturers Association
Provided by IHS under license with NEMA
No reproduction or networking permitted without license from IHS
Not for Resale

POLYVINYL ACETAL, HEAVY AND QUADRUPLE ENAMELLED RECTANGULAR AND SQUARE COPPER MAGNET WIRE THERMAL CLASS 105

INSULATING MATERIALS. The coating is based on a blend of polyvinyl acetal and phenolic resins (1.2.2.2).

THERMAL CLASS. 105°C when tested in accordance with Part 1, para. 1.6 and Part 3, para. 3.58.2.1.

GENERAL REQUIREMENTS. See Part 1.

Characteristics	Test Procedure, See Part 3, Paragraph	Requirements
1. DIMENSIONS	3.1.2.1	Rectangular Wire: a. Dimensions and radii—see Table 1-13 b. Thickness and width tolerances—see Table 1-14 c. Increase in thickness and width due to film coating—see Table TW (MW 18-C) Square Wire: Bare wire dimensions and tolerance, radii, and increase in dimensions due to film coating—see Table SQ (MW 18-C)
2. ADHERENCE AND FLEXIBILITY	3.2.2.1	No cracks visible in the film coating
3. ELONGATION	3.3.2.1	Not less than 32 percent for thicknesses of 0.049 inch (1.25 mm) and greater or 30 percent for thicknesses less than 0.049 inch (1.25 mm)
4. HEAT SHOCK	3.4.2.1	No cracks visible in the film coating after 30 percent elongation followed by conditioning at 150°C ± 3°C
6. SPRINGBACK	3.6.2.1	Not greater than 5°
7. DIELECTRIC STRENGTH	3.7.2.1	Minimum Breakdown Voltage Film Coating: Any Three of Four Electrodes / Fourth Electrode Heavy: 1500 / 500 Quadruple: 2500 / 900
9. COMPLETENESS OF CURE	3.9.1.1.1	No swelling or blistering visible in the film coating

PERIODIC CONFORMANCE TESTS

50. THERMOPLASTIC FLOW	3.50.2.1	Median not less than 180°C with heavy film coated 18 AWG
51. SOLUBILITY	3.51.2.1	A specimen immersed in xylene shall not soften sufficiently to expose the bare conductor
52. DIELECTRIC STRENGTH AT RATED TEMPERATURE	3.52.2.1	Average not less than 4275 volts with heavy film coated 18 AWG
54. TRANSFORMER OIL RESISTANCE	3.54.2.1	No cracks or blisters visible in the film coating

Copyright National Electrical Manufacturers Association
Provided by IHS under license with NEMA
No reproduction or networking permitted without license from IHS
Not for Resale

9009279 0001523 808

POLYVINYL ACETAL, HEAVY AND QUADRUPLE ENAMELLED RECTANGULAR AND SQUARE COPPER MAGNET WIRE THERMAL CLASS 105

Table TW (MW 18-C) Rectangular

Increase in Thickness and Width Due to Film Coating

Build	Increase in Width				Increase in Thickness			
	Minimum		Maximum *		Minimum		Maximum *	
	inches	mm	inches	mm	inches	mm	inches	mm
Heavy	0.0025	0.064	0.0045	0.114	0.0030	0.076	0.0050	0.127
Quadruple	0.0040	0.102	0.0060	0.152	0.0050	0.127	0.0070	0.178

*This maximum bare diameter shall be permitted to be exceeded provided the maximum overall dimensions of the coated wire does not exceed the sum of the maximum dimensions of the coated wire does not exceed the sum of the maximum dimensions of the bare wire plus the maximum increase due to the coating.
NOTE: For direct conversion of inches to millimeters, multiply inches by the factor 25.4 (exact). (This note approved as Authorized Engineering Information 3-11-1987.)

Table SQ (MW 18-C) Square

Dimensions of Square Wire—1 Through 14 AWG

Square AWG Size	Bare Wire Dimensions						Nominal Radii †		Heavy				Quadruple			
	Minimum		Nominal		Maximum				Minimum Increase in Dimension		Maximum Overall Dimension		Minimum Increase in Dimension		Maximum Overall Dimension	
	inches	mm	inches	mm	inches	mm	inches	mm	inches	mm	inches	mm	inches	mm	inches	mm
1	0.2864	7.275	0.2893	7.348	0.2922	7.422	0.040	1.02	0.0030	0.076	0.2972	7.549	0.0050	0.127	0.2992	7.600
2	0.2550	6.477	0.2576	6.543	0.2602	6.609	0.040	1.02	0.0030	0.076	0.2652	6.736	0.0050	0.127	0.2672	6.787
3	0.2271	5.768	0.2294	5.827	0.2317	5.885	0.040	1.02	0.0030	0.076	0.2367	6.012	0.0050	0.127	0.2387	6.063
4	0.2023	5.138	0.2043	5.189	0.2063	5.240	0.040	1.02	0.0030	0.076	0.2113	5.367	0.0050	0.127	0.2133	5.418
5	0.1801	4.575	0.1819	4.620	0.1837	4.666	0.040	1.02	0.0030	0.076	0.1887	4.793	0.0050	0.127	0.1907	4.844
6	0.1604	4.074	0.1620	4.115	0.1636	4.155	0.032	0.81	0.0030	0.076	0.1686	4.282	0.0050	0.127	0.1706	4.333
7	0.1429	3.630	0.1443	3.665	0.1457	3.701	0.032	0.81	0.0030	0.076	0.1507	3.828	0.0050	0.127	0.1527	3.879
8	0.1272	3.231	0.1285	3.264	0.1298	3.297	0.032	0.81	0.0030	0.076	0.1348	3.424	0.0050	0.127	0.1368	3.475
9	0.1133	2.878	0.1144	2.906	0.1155	2.934	0.026	0.66	0.0030	0.076	0.1205	3.061	0.0050	0.127	0.1225	3.112
10	0.1009	2.563	0.1019	2.588	0.1029	2.614	0.026	0.66	0.0030	0.076	0.1079	2.741	0.0050	0.127	0.1099	2.791
11	0.0897	2.278	0.0907	2.304	0.0917	2.329	0.020	0.51	0.0030	0.076	0.0967	2.456	0.0050	0.127	0.0987	2.507
12	0.0798	2.027	0.0808	2.052	0.0818	2.078	0.020	0.51	0.0030	0.076	0.0868	2.205	0.0050	0.127	0.0888	2.256
13	0.0710	1.803	0.0720	1.829	0.0730	1.854	0.016	0.41	0.0030	0.076	0.0780	1.981	0.0050	0.127	0.0800	2.032
14	0.0631	1.603	0.0641	1.628	0.0651	1.654	0.016	0.41	0.0030	0.076	0.0701	1.781	0.0050	0.127	0.0721	1.831

†Radii tolerance is plus or minus 25 percent.
NOTE: For direct conversion of inches to millimeters, multiply inches by the factor 25.4 (exact). (This note approved as Authorized Engineering Information 3-11-1987.)

Copyright National Electrical Manufacturers Association
Provided by IHS under license with NEMA
No reproduction or networking permitted without license from IHS
Not for Resale

9009279 0001524 744

POLYVINYL ACETAL WITH SELF-BONDING OVERCOAT, TYPE 1 ENAMELLED ROUND COPPER MAGNET WIRE THERMAL CLASS 105

INSULATING MATERIALS. The conductor shall be coated with a dual film. The underlying coating is based on a blend of polyvinyl acetal and phenolic resins (1.2.2.2). The superimposed coating is based on thermoplastic polyvinyl acetal resins (1.2.2.2).

THERMAL CLASS. 105°C when tested in accordance with Part 1, para. 1.6 and Part 3, para. 3.58.1.1.

GENERAL REQUIREMENTS. See Part 1.

Characteristics	Test Procedure, See Part 3, Paragraph	Requirements
1. DIMENSIONS	3.1.1.1.1	See Table T1 (MW 19-C)
2. ADHERENCE AND FLEXIBILITY	3.2.1.1	No cracks visible in the film coating
3. ELONGATION	3.3.1.1	Not less than value in Table T1 (MW 19-C)
4. HEAT SHOCK	3.4.1.1	No cracks visible in the film coating after conditioning at 175°C
6. SPRINGBACK	3.6.1.1	Not greater than value in Table T1 (MW 19-C)
7. DIELECTRIC STRENGTH	3.7.1.1	Not less than value in Table T1 (MW 19-C)
8. CONTINUITY	3.8.1.1	The number of discontinuities shall not exceed 25 when tested in accordance with the following: 14–30 AWG para. 3.8.1.1.1 31–44 AWG para. 3.8.1.1.1 or 3.8.1.1.2
9. COMPLETENESS OF CURE	3.9.1.1.1	No swelling or blistering visible in the film coating

PERIODIC CONFORMANCE TESTS

50. THERMOPLASTIC FLOW	3.50.1.1	Median not less than 180°C with Type 2 film coated 18 or 36 AWG
51. SOLUBILITY	3.51.1.1	A specimen of Type 2 film coated 18 or 36 AWG immersed in xylene shall not soften sufficiently to expose the bare conductor
52. DIELECTRIC STRENGTH AT RATED TEMPERATURE	3.52.1.1	Type 2 film coated wire shall average not less than 4275 volts for 18 AWG or 1900 volts for 36 AWG
57. BOND	3.57.1.1	Specimens of 18, 26, and 36 AWG Type 2, no separation of turns

Copyright National Electrical Manufacturers Association
Provided by IHS under license with NEMA
No reproduction or networking permitted without license from IHS
Not for Resale

9009279 0001525 680

POLYVINYL ACETAL WITH SELF-BONDING OVERCOAT, TYPE 1
ENAMELLED ROUND COPPER MAGNET WIRE
THERMAL CLASS 105
Table T1 (MW 19-C)

AWG Size	Bare Wire Diameter, Inches†			Insulation †						AWG Size
				Minimum Increase in Diameter, Inches		Maximum Overall Diameter, Inches	Elongation, Minimum Percent	Springback, Maximum Degrees per Turn	Dielectric Strength, Minimum Breakdown Volts	
	Minimum	Nominal	Maximum	Film Coating	Outer Coating					
14	0.0635	0.0641	0.0644 *	0.0016	0.0006	0.0682	33	42	3525	14
15	0.0565	0.0571	0.0574 *	0.0015	0.0006	0.0609	33	46	3425	15
16	0.0503	0.0508	0.0511 *	0.0014	0.0006	0.0545	33	50	3325	16
17	0.0448	0.0453	0.0455 *	0.0014	0.0006	0.0488	32	54	3250	17
18	0.0399	0.0403	0.0406 *	0.0013	0.0006	0.0437	32	58	3175	18
19	0.0355	0.0359	0.0361 *	0.0012	0.0006	0.0391	31	62	3075	19
20	0.0317	0.0320	0.0322 *	0.0012	0.0005	0.0351	30	66	3000	20
21	0.0282	0.0285	0.0286 *	0.0011	0.0005	0.0314	30	53	2925	21
22	0.0250	0.0253	0.0254 *	0.0011	0.0005	0.0281	29	58	2850	22
23	0.0224	0.0226	0.0227 *	0.0010	0.0005	0.0253	29	62	2775	23
24	0.0199	0.0201	0.0202 *	0.0010	0.0005	0.0227	28	67	2700	24
25	0.0177	0.0179	0.0180 *	0.0009	0.0005	0.0203	28	72	2625	25
26	0.0157	0.0159	0.0160 *	0.0009	0.0005	0.0182	27	76	2550	26
27	0.0141	0.0142	0.0143	0.0008	0.0005	0.0164	27	50	2500	27
28	0.0125	0.0126	0.0127	0.0008	0.0005	0.0147	26	55	2425	28
29	0.0112	0.0113	0.0114	0.0007	0.0004	0.0133	26	61	2375	29
30	0.0099	0.0100	0.0101	0.0007	0.0004	0.0119	25	66	2300	30
31	0.0088	0.0089	0.0090	0.0006	0.0004	0.0108	24	..	2075	31
32	0.0079	0.0080	0.0081	0.0006	0.0004	0.0098	24	..	1850	32
33	0.0070	0.0071	0.0072	0.0005	0.0004	0.0088	23	..	1675	33
34	0.0062	0.0063	0.0064	0.0005	0.0003	0.0078	22	..	1500	34
35	0.0055	0.0056	0.0057	0.0004	0.0003	0.0070	21	..	1325	35
36	0.0049	0.0050	0.0051	0.0004	0.0003	0.0063	20	..	1200	36
37	0.0044	0.0045	0.0046	0.0003	0.0003	0.0057	20	..	1075	37
38	0.0039	0.0040	0.0041	0.0003	0.0002	0.0051	19	..	950	38
39	0.0034	0.0035	0.0036	0.0002	0.0002	0.0045	18	..	850	39
40	0.0030	0.0031	0.0032	0.0002	0.0002	0.0040	17	..	775	40
41	0.0027	0.0028	0.0029	0.0002	0.0002	0.0036	17	..	700	41
42	0.0024	0.0025	0.0026	0.0002	0.0002	0.0032	16	..	625	42
43	0.0021	0.0022	0.0023	0.0002	0.0001	0.0029	15	..	550	43
44	0.0019	0.0020	0.0021	0.0001	0.0001	0.0027	14	..	500	44

*This maximum bare diameter shall be permitted to be exceeded; see 1.4.9.1.
†For metric equivalents, see 1.5.
NOTE: For direct conversion of inches to millimeters, multiply inches by the factor 25.4 (exact). (This note approved as Authorized Engineering Information 3-11-1987.)

Copyright National Electrical Manufacturers Association
Provided by IHS under license with NEMA
No reproduction or networking permitted without license from IHS
Not for Resale

9009279 0001526 517

POLYVINYL ACETAL WITH SELF-BONDING OVERCOAT, TYPE 2 ENAMELLED ROUND COPPER MAGNET WIRE THERMAL CLASS 105

INSULATING MATERIALS. The conductor shall be coated with a dual film. The underlying coating is based on a blend of polyvinyl acetal and phenolic resins (1.2.2.2). The superimposed coating is based on thermoplastic polyvinyl acetal resins (1.2.2.2).

THERMAL CLASS. 105°C when tested in accordance with Part 1, para. 1.6 and Part 3, para. 3.58.1.1.

GENERAL REQUIREMENTS. See Part 1.

Characteristics	Test Procedure, See Part 3, Paragraph	Requirements
1. DIMENSIONS	3.1.1.1.1	See Table T2 (MW 19-C)
2. ADHERENCE AND FLEXIBILITY	3.2.1.1	No cracks visible in the film coating
3. ELONGATION	3.3.1.1	Not less than value in Table T2 (MW 19-C)
4. HEAT SHOCK	3.4.1.1	No cracks visible in the film coating after conditioning at 175°C
6. SPRINGBACK	3.6.1.1	Not greater than value in Table T2 (MW 19-C)
7. DIELECTRIC STRENGTH	3.7.1.1	Not less than value in Table T2 (MW 19-C)
8. CONTINUITY	3.8.1.1	The number of discontinuities shall not exceed 5 for 14–24 AWG, 7 for 25–30 AWG, or 5 for 31–44 AWG, when tested in accordance with the following: 14–30 AWG para. 3.8.1.1.1 31–44 AWG para. 3.8.1.1.1 or 3.8.1.1.2
9. COMPLETENESS OF CURE	3.9.1.1.1	No swelling or blistering visible in the film coating

PERIODIC CONFORMANCE TESTS

50. THERMOPLASTIC FLOW	3.50.1.1	Median not less than 180°C with Type 2 film coated 18 or 36 AWG
51. SOLUBILITY	3.51.1.1	A specimen of Type 2 film coated 18 or 36 AWG immersed in xylene shall not soften sufficiently to expose the bare conductor
52. DIELECTRIC STRENGTH AT RATED TEMPERATURE	3.52.1.1	Type 2 film coated wire shall average not less than 4275 volts for 18 AWG or 1900 volts for 36 AWG
57. BOND	3.57.1.1	Specimens of 18, 26, and 36 AWG Type 2, no separation of turns

Copyright National Electrical Manufacturers Association
Provided by IHS under license with NEMA
No reproduction or networking permitted without license from IHS
Not for Resale

POLYVINYL ACETAL WITH SELF-BONDING OVERCOAT, TYPE 2
ENAMELLED ROUND COPPER MAGNET WIRE
THERMAL CLASS 105
Table T2 (MW 19-C)

AWG Size	Bare Wire Diameter, Inches†			Insulation †: Minimum Increase in Diameter, Inches		Insulation †: Maximum Overall Diameter, Inches	Elongation, Minimum Percent	Springback, Maximum Degrees per Turn	Dielectric Strength, Minimum Breakdown Volts	AWG Size
	Minimum	Nominal	Maximum	Film Coating	Outer Coating					
14	0.0635	0.0641	0.0644 *	0.0032	0.0006	0.0700	33	46	6325	14
15	0.0565	0.0571	0.0574 *	0.0030	0.0006	0.0627	33	49	6175	15
16	0.0503	0.0508	0.0511 *	0.0029	0.0006	0.0562	33	53	6000	16
17	0.0448	0.0453	0.0455 *	0.0028	0.0006	0.0504	32	58	5850	17
18	0.0399	0.0403	0.0405 *	0.0026	0.0006	0.0452	32	62	5700	18
19	0.0355	0.0359	0.0361 *	0.0025	0.0006	0.0406	31	66	5550	19
20	0.0317	0.0320	0.0322 *	0.0023	0.0005	0.0364	30	70	5400	20
21	0.0282	0.0285	0.0286 *	0.0022	0.0005	0.0326	30	53	5250	21
22	0.0250	0.0253	0.0254 *	0.0021	0.0005	0.0293	29	58	5125	22
23	0.0224	0.0226	0.0227 *	0.0020	0.0005	0.0264	29	64	5000	23
24	0.0199	0.0201	0.0202 *	0.0019	0.0005	0.0238	28	69	4850	24
25	0.0177	0.0179	0.0180 *	0.0018	0.0005	0.0214	28	74	4725	25
26	0.0157	0.0159	0.0160 *	0.0017	0.0005	0.0193	27	80	4600	26
27	0.0141	0.0142	0.0143	0.0016	0.0005	0.0173	27	55	4500	27
28	0.0125	0.0126	0.0127	0.0016	0.0005	0.0156	26	60	4375	28
29	0.0112	0.0113	0.0114	0.0015	0.0004	0.0142	26	65	4250	29
30	0.0099	0.0100	0.0101	0.0014	0.0004	0.0128	25	70	4150	30
31	0.0088	0.0089	0.0090	0.0013	0.0004	0.0115	24	..	3825	31
32	0.0079	0.0080	0.0081	0.0012	0.0004	0.0105	24	..	3525	32
33	0.0070	0.0071	0.0072	0.0011	0.0004	0.0095	23	..	3250	33
34	0.0062	0.0063	0.0064	0.0010	0.0003	0.0084	22	..	2975	34
35	0.0055	0.0056	0.0057	0.0009	0.0003	0.0076	21	..	2750	35
36	0.0049	0.0050	0.0051	0.0008	0.0003	0.0069	20	..	2525	36
37	0.0044	0.0045	0.0046	0.0008	0.0003	0.0062	20	..	2325	37
38	0.0039	0.0040	0.0041	0.0007	0.0002	0.0056	19	..	2150	38
39	0.0034	0.0035	0.0036	0.0006	0.0002	0.0050	18	..	1975	39
40	0.0030	0.0031	0.0032	0.0006	0.0002	0.0044	17	..	1800	40
41	0.0027	0.0028	0.0029	0.0005	0.0002	0.0040	17	..	1675	41
42	0.0024	0.0025	0.0026	0.0004	0.0002	0.0037	16	..	1525	42
43	0.0021	0.0022	0.0023	0.0004	0.0001	0.0033	15	..	1400	43
44	0.0019	0.0020	0.0021	0.0004	0.0001	0.0030	14	..	1300	44

*This maximum bare diameter shall be permitted to be exceeded; see 1.4.9.1.
†For metric equivalents, see 1.5.
NOTE: For direct conversion of inches to millimeters, multiply inches by the factor 25.4 (exact). (This note approved as Authorized Engineering Information 3-11-1987.)

Copyright National Electrical Manufacturers Association
Provided by IHS under license with NEMA
No reproduction or networking permitted without license from IHS
Not for Resale

9009279 0001528 39T

POLYVINYL ACETAL WITH SELF-BONDING OVERCOAT, TYPE 3 ENAMELLED ROUND COPPER MAGNET WIRE THERMAL CLASS 105

INSULATING MATERIALS. The conductor shall be coated with a dual film. The underlying coating is based on a blend of polyvinyl acetal and phenolic resins (1.2.2.2). The superimposed coating is based on thermoplastic polyvinyl acetal resins (1.2.2.2).

THERMAL CLASS. 105°C when tested in accordance with Part 1, para. 1.6 and Part 3, para. 3.58.1.1.

GENERAL REQUIREMENTS. See Part 1.

Characteristics	Test Procedure, See Part 3, Paragraph	Requirements
1. DIMENSIONS	3.1.1.1.1	See Table T3 (MW 19-C)
2. ADHERENCE AND FLEXIBILITY	3.2.1.1	No cracks visible in the film coating
3. ELONGATION	3.3.1.1	Not less than value in Table T3 (MW 19-C)
4. HEAT SHOCK	3.4.1.1	No cracks visible in the film coating after conditioning at 175°C
6. SPRINGBACK	3.6.1.1	Not greater than value in Table T3 (MW 19-C)
7. DIELECTRIC STRENGTH	3.7.1.1	Not less than value in Table T3 (MW 19-C)
8. CONTINUITY	3.8.1.1	The number of discontinuities shall not exceed 3 for 16–24 AWG or 5 for 25–30 AWG when tested in accordance with the following: 16–30 AWG para. 3.8.1.1.1
9. COMPLETENESS OF CURE	3.9.1.1.1	No swelling or blistering visible in the film coating

PERIODIC CONFORMANCE TESTS

50. THERMOPLASTIC FLOW	3.50.1.1	Median not less than 180°C with Type 2 film coated 18 AWG
51. SOLUBILITY	3.51.1.1	A specimen of Type 2 film coated 18 AWG immersed in xylene shall not soften sufficiently to expose the bare conductor
52. DIELECTRIC STRENGTH AT RATED TEMPERATURE	3.52.1.1	Type 2 film coated wire shall average not less than 4275 volts for 18 AWG
57. BOND	3.57.1.1	Specimens of 18 and 26 AWG Type 2, no separation of turns

Copyright National Electrical Manufacturers Association
Provided by IHS under license with NEMA
No reproduction or networking permitted without license from IHS
Not for Resale

9009279 0001529 226

POLYVINYL ACETAL WITH SELF-BONDING OVERCOAT, TYPE 3
ENAMELLED ROUND COPPER MAGNET WIRE
THERMAL CLASS 105
Table T3 (MW 19-C)

AWG Size	Bare Wire Diameter, Inches†			Insulation†						AWG Size
				Minimum Increase in Diameter, Inches		Maximum Overall Diameter, Inches	Elongation, Minimum Percent	Springback, Maximum Degrees per Turn	Dielectric Strength, Minimum Breakdown Volts	
	Minimum	Nominal	Maximum	Film Coating	Outer Coating					
16	0.0503	0.0508	0.0511 *	0.0043	0.0006	0.0577	33	53	8000	16
17	0.0448	0.0453	0.0455 *	0.0041	0.0006	0.0520	32	58	7800	17
18	0.0399	0.0403	0.0405 *	0.0039	0.0006	0.0468	32	62	7600	18
19	0.0355	0.0359	0.0361 *	0.0037	0.0006	0.0422	31	66	7400	19
20	0.0317	0.0320	0.0322 *	0.0035	0.0005	0.0379	30	70	7200	20
21	0.0282	0.0285	0.0286 *	0.0033	0.0005	0.0342	30	53	7025	21
22	0.0250	0.0253	0.0254 *	0.0032	0.0005	0.0308	29	58	6850	22
23	0.0224	0.0226	0.0227 *	0.0030	0.0005	0.0279	29	64	6675	23
24	0.0199	0.0201	0.0202 *	0.0029	0.0005	0.0252	28	69	6500	24
25	0.0177	0.0179	0.0180 *	0.0027	0.0005	0.0228	28	74	6325	25
26	0.0157	0.0159	0.0160 *	0.0026	0.0005	0.0206	27	80	6150	26
27	0.0141	0.0142	0.0143	0.0024	0.0005	0.0185	27	55	6000	27
28	0.0125	0.0126	0.0127	0.0023	0.0005	0.0166	26	60	5850	28
29	0.0112	0.0113	0.0114	0.0022	0.0004	0.0152	26	65	5700	29
30	0.0099	0.0100	0.0101	0.0021	0.0004	0.0137	25	70	5550	30

*This maximum bare diameter shall be permitted to be exceeded; see 1.4.9.1.
†For metric equivalents, see 1.5.
NOTE: For direct conversion of inches to millimeters, multiply inches by the factor 25.4 (exact). (This note approved as Authorized Engineering Information 3-11-1987.)

Copyright National Electrical Manufacturers Association
Provided by IHS under license with NEMA
No reproduction or networking permitted without license from IHS
Not for Resale

POLYIMIDE, HEAVY AND QUADRUPLE ENAMELLED RECTANGULAR AND SQUARE COPPER MAGNET WIRE THERMAL CLASS 220

INSULATING MATERIALS. The coating is based on polyimide resins (1.2.2.2).

THERMAL CLASS. 220°C when tested in accordance with Part 1, para. 1.6 and Part 3, para. 3.58.2.1.

GENERAL REQUIREMENTS. See Part 1.

Characteristics	Test Procedure, See Part 3, Paragraph	Requirements
1. DIMENSIONS	3.1.2.1	Rectangular Wire: a. Dimensions and radii—see Table 1-13 b. Thickness and width tolerances—see Table 1-14 c. Increase in thickness and width due to film coating—see Table TW (MW 20-C) Square Wire: Bare wire dimensions and tolerances, radii, and increase in dimensions due to film coating—see Table SQ (MW 20-C)
2. ADHERENCE AND FLEXIBILITY	3.2.2.1	No cracks visible in the film coating
3. ELONGATION	3.3.2.1	Not less than 32 percent for thickness of 0.049 inch (1.25 mm) and greater or 30 percent for thickness less than 0.049 inch (1.25 mm)
4. HEAT SHOCK	3.4.2.1	No cracks visible in the film coating after 15 percent elongation followed by conditioning at 240°C ± 3°C
6. SPRINGBACK	3.6.2.1	Not greater than 5°
7. DIELECTRIC STRENGTH	3.7.2.1	Minimum Breakdown Voltage Film Coating / Any Three of Four Electrodes / Fourth Electrode Heavy: 1500 / 500 Quadruple: 2500 / 900
9. COMPLETENESS OF CURE	3.9.1.1.2	Dissipation factor not greater than 0.60 percent

PERIODIC CONFORMANCE TESTS

50. THERMOPLASTIC FLOW	3.50.2.1	Median not less than 400°C with heavy film coated 18 AWG
51. SOLUBILITY	3.51.2.1	Two specimens immersed in: xylene 50/50 xylene/ethyl Cellosolve shall not soften sufficiently to expose the bare conductor
52. DIELECTRIC STRENGTH AT RATED TEMPERATURE	3.52.2.1	Average not less than 4275 volts with heavy film coated 18 AWG

Copyright National Electrical Manufacturers Association
Provided by IHS under license with NEMA
No reproduction or networking permitted without license from IHS
Not for Resale

POLYIMIDE, HEAVY AND QUADRUPLE ENAMELLED RECTANGULAR AND SQUARE COPPER MAGNET WIRE THERMAL CLASS 220

Table TW (MW 20-C) Rectangular

Increase in Thickness and Width Due to Film Coating

Build	Increase in Width				Increase in Thickness			
	Minimum		Maximum *		Minimum		Maximum *	
	inches	mm	inches	mm	inches	mm	inches	mm
Heavy	0.0025	0.064	0.0045	0.114	0.0030	0.076	0.0050	0.127
Quadruple	0.0040	0.102	0.0060	0.152	0.0050	0.127	0.0070	0.178

*The maximum increase shall be permitted to be exceeded provided the maximum overall dimension of the coated wire does not exceed the sum of the maximum dimension of the bare wire plus the maximum increase due to the coating.

NOTE: For direct conversion of inches to millimeters, multiply inches by the factor 25.4 (exact). (This note approved as Authorized Engineering Information 3-11-1987.)

Table SQ (MW 20-C) Square

Dimensions of Square Wire—1 Through 14 AWG

Square AWG Size	Bare Wire Dimensions						Nominal Radii †		Heavy				Quadruple			
	Minimum		Nominal		Maximum				Minimum Increase in Dimension		Maximum Overall Dimension		Minimum Increase in Dimension		Maximum Overall Dimension	
	inches	mm	inches	mm	inches	mm	inches	mm	inches	mm	inches	mm	inches	mm	inches	mm
1	0.2864	7.275	0.2893	7.348	0.2922	7.422	0.040	1.02	0.0030	0.076	0.2972	7.549	0.0050	0.127	0.2992	7.600
2	0.2550	6.477	0.2576	6.543	0.2602	6.609	0.040	1.02	0.0030	0.076	0.2652	6.736	0.0050	0.127	0.2672	6.787
3	0.2271	5.768	0.2294	5.827	0.2317	5.885	0.040	1.02	0.0030	0.076	0.2367	6.012	0.0050	0.127	0.2387	6.063
4	0.2023	5.138	0.2043	5.189	0.2063	5.240	0.040	1.02	0.0030	0.076	0.2113	5.367	0.0050	0.127	0.2133	5.418
5	0.1801	4.575	0.1819	4.620	0.1837	4.666	0.040	1.02	0.0030	0.076	0.1887	4.793	0.0050	0.127	0.1907	4.844
6	0.1604	4.074	0.1620	4.115	0.1636	4.155	0.032	0.81	0.0030	0.076	0.1686	4.282	0.0050	0.127	0.1706	4.333
7	0.1429	3.630	0.1443	3.665	0.1457	3.701	0.032	0.81	0.0030	0.076	0.1507	3.828	0.0050	0.127	0.1527	3.879
8	0.1272	3.231	0.1285	3.264	0.1298	3.297	0.032	0.81	0.0030	0.076	0.1348	3.424	0.0050	0.127	0.1368	3.475
9	0.1133	2.878	0.1144	2.906	0.1155	2.934	0.026	0.66	0.0030	0.076	0.1205	3.061	0.0050	0.127	0.1225	3.112
10	0.1009	2.563	0.1019	2.588	0.1029	2.614	0.026	0.66	0.0030	0.076	0.1079	2.741	0.0050	0.127	0.1099	2.791
11	0.0897	2.278	0.0907	2.304	0.0917	2.329	0.020	0.51	0.0030	0.076	0.0967	2.456	0.0050	0.127	0.0987	2.507
12	0.0798	2.027	0.0808	2.052	0.0818	2.078	0.020	0.51	0.0030	0.076	0.0868	2.205	0.0050	0.127	0.0888	2.256
13	0.0710	1.803	0.0720	1.829	0.0730	1.854	0.016	0.41	0.0030	0.076	0.0780	1.981	0.0050	0.127	0.0800	2.032
14	0.0631	1.603	0.0641	1.628	0.0651	1.654	0.016	0.41	0.0030	0.076	0.0701	1.781	0.0050	0.127	0.0721	1.831

†Radii tolerance is plus or minus 25 percent.

NOTE: For direct conversion of inches to millimeters, multiply inches by the factor 25.4 (exact). (This note approved as Authorized Engineering Information 3-11-1987.)

Copyright National Electrical Manufacturers Association
Provided by IHS under license with NEMA
No reproduction or networking permitted without license from IHS
Not for Resale

9009279 0001532 810

SINGLE SILK COVERED BARE OR FILM COATED ROUND COPPER MAGNET WIRE THERMAL CLASS 90 OR 105

INSULATING MATERIALS. The silk shall be of good quality and substantially free from knots, ravelings, foreign matter and other irregularities.

THERMAL CLASS. 90°C unimpregnated or 105°C impregnated, as defined in Part 3, para. 3.58.1.2.

GENERAL REQUIREMENTS. See Part 1.

Characteristics	Test Procedure, See Part 3, Paragraph	Requirements
1. DIMENSIONS	3.1.1.2	See Table S (MW 21-C)
3. ELONGATION	3.3.1.2	Not less than the following:

AWG Size	Minimum Elongation Percent
24–34	20
35–40	15

11. COVERAGE	3.11.1.2	The covering shall not open sufficiently to expose the bare or film coated wire

Copyright National Electrical Manufacturers Association
Provided by IHS under license with NEMA
No reproduction or networking permitted without license from IHS
Not for Resale

9009279 0001533 757

SINGLE SILK COVERED BARE OR FILM COATED ROUND COPPER MAGNET WIRE THERMAL CLASS 90 OR 105

Table S (MW 21-C)

AWG Size	Bare Wire Diameter, Inches†			Minimum Increase, One Layer of Silk		Maximum Overall Diameter						AWG Size
						Bare		Single Film		Heavy Film		
	Minimum	Nominal	Maximum	inches	mm	inches	mm	inches	mm	inches	mm	
24	0.0199	0.0201	0.0202*	0.0012	0.030	0.0222	0.564	0.0237	0.602	0.0247	0.627	24
25	0.0177	0.0179	0.0180*	0.0012	0.030	0.0200	0.508	0.0214	0.544	0.0223	0.566	25
26	0.0157	0.0159	0.0160*	0.0012	0.030	0.0180	0.457	0.0193	0.490	0.0202	0.513	26
27	0.0141	0.0142	0.0143	0.0012	0.030	0.0163	0.414	0.0176	0.447	0.0184	0.467	27
28	0.0125	0.0126	0.0127	0.0012	0.030	0.0147	0.373	0.0160	0.406	0.0167	0.424	28
29	0.0112	0.0113	0.0114	0.0012	0.030	0.0134	0.340	0.0146	0.371	0.0153	0.389	29
30	0.0099	0.0100	0.0101	0.0012	0.030	0.0121	0.307	0.0132	0.335	0.0139	0.353	30
31	0.0088	0.0089	0.0090	0.0012	0.030	0.0110	0.279	0.0120	0.305	0.0128	0.325	31
32	0.0079	0.0080	0.0081	0.0012	0.030	0.0101	0.257	0.0111	0.282	0.0118	0.300	32
33	0.0070	0.0071	0.0072	0.0012	0.030	0.0092	0.234	0.0101	0.257	0.0108	0.274	33
34	0.0062	0.0063	0.0064	0.0012	0.030	0.0084	0.213	0.0092	0.234	0.0098	0.249	34
35	0.0055	0.0056	0.0057	0.0012	0.030	0.0077	0.196	0.0084	0.213	0.0090	0.229	35
36	0.0049	0.0050	0.0051	0.0012	0.030	0.0071	0.180	0.0078	0.198	0.0083	0.211	36
37	0.0044	0.0045	0.0046	0.0012	0.030	0.0066	0.168	0.0072	0.183	0.0077	0.196	37
38	0.0039	0.0040	0.0041	0.0012	0.030	0.0061	0.155	0.0067	0.170	0.0071	0.180	38
39	0.0034	0.0035	0.0036	0.0012	0.030	0.0056	0.142	0.0061	0.155	0.0065	0.165	39
40	0.0030	0.0031	0.0032	0.0012	0.030	0.0052	0.132	0.0057	0.145	0.0060	0.152	40

*This maximum bare diameter shall be permitted to be exceeded; see 1.4.9.1.
†For metric equivalents, see 1.5.
NOTE: For direct conversion of inches to millimeters, multiply inches by the factor 25.4 (exact). (This note approved as Authorized Engineering Information 3-11-1987.)

Copyright National Electrical Manufacturers Association
Provided by IHS under license with NEMA
No reproduction or networking permitted without license from IHS
Not for Resale

9009279 0001534 693

DOUBLE SILK COVERED BARE OR FILM COATED ROUND COPPER MAGNET WIRE THERMAL CLASS 90 OR 105

INSULATING MATERIALS. The silk shall be of good quality and substantially free from knots, ravelings, foreign matter and other irregularities.

THERMAL CLASS. 90°C unimpregnated or 105°C impregnated, as defined in Part 3, para. 3.58.1.2.

GENERAL REQUIREMENTS. See Part 1.

Characteristics	Test Procedure, See Part 3, Paragraph	Requirements
1. DIMENSIONS	3.1.1.2	See Table D (MW 21-C)
3. ELONGATION	3.3.1.2	Not less than the following:

AWG Size	Minimum Elongation Percent
24–34	20
35–40	15

11. COVERAGE	3.11.1.2	The covering shall not open sufficiently to expose the bare or film coated wire

Copyright National Electrical Manufacturers Association
Provided by IHS under license with NEMA
No reproduction or networking permitted without license from IHS
Not for Resale

9009279 0001535 52T

DOUBLE SILK COVERED BARE OR FILM COATED ROUND COPPER MAGNET WIRE THERMAL CLASS 90 OR 105

Table D (MW 21-C)

AWG Size	Bare Wire Diameter, Inches† Minimum	Nominal	Maximum	Minimum Increase, Two Layers of Silk inches	mm	Maximum Overall Diameter Bare inches	mm	Single Film inches	mm	Heavy Film inches	mm	AWG Size
24	0.0199	0.0201	0.0202 *	0.0024	0.061	0.0242	0.615	0.0257	0.653	0.0267	0.678	24
25	0.0177	0.0179	0.0180 *	0.0024	0.061	0.0220	0.559	0.0234	0.594	0.0243	0.617	25
26	0.0157	0.0159	0.0160 *	0.0024	0.061	0.0200	0.508	0.0213	0.541	0.0222	0.564	26
27	0.0141	0.0142	0.0143	0.0024	0.061	0.0183	0.465	0.0196	0.498	0.0204	0.518	27
28	0.0125	0.0126	0.0127	0.0024	0.061	0.0167	0.424	0.0180	0.457	0.0187	0.475	28
29	0.0112	0.0113	0.0114	0.0024	0.061	0.0154	0.391	0.0166	0.422	0.0173	0.439	29
30	0.0099	0.0100	0.0101	0.0024	0.061	0.0141	0.358	0.0152	0.386	0.0159	0.404	30
31	0.0088	0.0089	0.0090	0.0024	0.061	0.0130	0.330	0.0140	0.356	0.0148	0.376	31
32	0.0079	0.0080	0.0081	0.0024	0.061	0.0121	0.307	0.0131	0.333	0.0138	0.351	32
33	0.0070	0.0071	0.0072	0.0024	0.061	0.0112	0.284	0.0121	0.307	0.0128	0.325	33
34	0.0062	0.0063	0.0064	0.0024	0.061	0.0104	0.264	0.0112	0.284	0.0118	0.300	34
35	0.0055	0.0056	0.0057	0.0024	0.061	0.0097	0.246	0.0104	0.264	0.0110	0.279	35
36	0.0049	0.0050	0.0051	0.0024	0.061	0.0091	0.231	0.0098	0.249	0.0103	0.262	36
37	0.0044	0.0045	0.0046	0.0024	0.061	0.0086	0.218	0.0092	0.234	0.0097	0.246	37
38	0.0039	0.0040	0.0041	0.0024	0.061	0.0081	0.205	0.0087	0.221	0.0091	0.231	38
39	0.0034	0.0035	0.0036	0.0024	0.061	0.0076	0.193	0.0081	0.206	0.0085	0.216	39
40	0.0030	0.0031	0.0032	0.0024	0.061	0.0072	0.183	0.0077	0.196	0.0080	0.203	40

*This maximum bare diameter shall be permitted to be exceeded; see 1.4.9.1.
†For metric equivalents, see 1.5.
NOTE: For direct conversion of inches to millimeters, multiply inches by the factor 25.4 (exact). (This note approved as Authorized Engineering Information 3-11-1987.)

Copyright National Electrical Manufacturers Association
Provided by IHS under license with NEMA
No reproduction or networking permitted without license from IHS
Not for Resale

9009279 0001536 466

SINGLE NYLON FIBER COVERED BARE OR FILM COATED ROUND COPPER MAGNET WIRE THERMAL CLASS 90 OR 105

INSULATING MATERIALS. The nylon fiber shall be of good quality and substantially free from knots, ravelings, foreign matter and other irregularities.

THERMAL CLASS. 90°C unimpregnated or 105°C impregnated, as defined in Part 3, para. 3.58.1.2.

GENERAL REQUIREMENTS. See Part 1.

Characteristics	Test Procedure, See Part 3, Paragraph	Requirements
1. DIMENSIONS	3.1.1.2	See Table S (MW 22-C)
3. ELONGATION	3.3.1.2	Not less than the following:

AWG Size	Minimum Elongation Percent
24–34	20
35–40	15

11. COVERAGE	3.11.1.2	The covering shall not open sufficiently to expose the bare or film coated wire

Copyright National Electrical Manufacturers Association
Provided by IHS under license with NEMA
No reproduction or networking permitted without license from IHS
Not for Resale

9009279 0001537 3T2

SINGLE NYLON FIBER COVERED BARE OR FILM COATED ROUND COPPER MAGNET WIRE THERMAL CLASS 90 OR 105

Table S (MW 22-C)

AWG Size	Bare Wire Diameter, Inches†			Minimum Increase, One Layer of Nylon Fiber		Maximum Overall Diameter						AWG Size
						Bare		Single Film		Heavy Film		
	Minimum	Nominal	Maximum	inches	mm	inches	mm	inches	mm	inches	mm	
24	0.0199	0.0201	0.0202 *	0.0013	0.033	0.0224	0.569	0.0239	0.607	0.0249	0.632	24
25	0.0177	0.0179	0.0180 *	0.0013	0.033	0.0202	0.513	0.0216	0.549	0.0225	0.572	25
26	0.0157	0.0159	0.0160 *	0.0013	0.033	0.0182	0.462	0.0195	0.495	0.0204	0.518	26
27	0.0141	0.0142	0.0143	0.0013	0.033	0.0165	0.419	0.0178	0.452	0.0186	0.472	27
28	0.0125	0.0126	0.0127	0.0013	0.033	0.0149	0.378	0.0162	0.411	0.0169	0.429	28
29	0.0112	0.0113	0.0114	0.0013	0.033	0.0136	0.345	0.0148	0.376	0.0155	0.394	29
30	0.0099	0.0100	0.0101	0.0013	0.033	0.0123	0.312	0.0134	0.340	0.0141	0.358	30
31	0.0088	0.0089	0.0090	0.0013	0.033	0.0112	0.284	0.0122	0.310	0.0130	0.330	31
32	0.0079	0.0080	0.0081	0.0013	0.033	0.0103	0.262	0.0113	0.287	0.0120	0.305	32
33	0.0070	0.0071	0.0072	0.0013	0.033	0.0094	0.239	0.0103	0.262	0.0110	0.279	33
34	0.0062	0.0063	0.0064	0.0013	0.033	0.0086	0.218	0.0094	0.239	0.0100	0.254	34
35	0.0055	0.0056	0.0057	0.0013	0.033	0.0079	0.201	0.0086	0.218	0.0092	0.234	35
36	0.0049	0.0050	0.0051	0.0013	0.033	0.0073	0.185	0.0080	0.203	0.0085	0.216	36
37	0.0044	0.0045	0.0046	0.0013	0.033	0.0068	0.173	0.0074	0.188	0.0079	0.201	37
38	0.0039	0.0040	0.0041	0.0013	0.033	0.0063	0.160	0.0069	0.175	0.0073	0.185	38
39	0.0034	0.0035	0.0036	0.0013	0.033	0.0058	0.147	0.0063	0.160	0.0067	0.170	39
40	0.0030	0.0031	0.0032	0.0013	0.033	0.0054	0.137	0.0059	0.150	0.0062	0.157	40

*This maximum bare diameter shall be permitted to be exceeded; see 1.4.9.1.
†For metric equivalents, see 1.5.
NOTE: For direct conversion of inches to millimeters, multiply inches by the factor 25.4 (exact). (This note approved as Authorized Engineering Information 3-11-1987.)

Copyright National Electrical Manufacturers Association
Provided by IHS under license with NEMA
No reproduction or networking permitted without license from IHS
Not for Resale

9009279 0001538 239

DOUBLE NYLON FIBER COVERED BARE OR FILM COATED ROUND COPPER MAGNET WIRE THERMAL CLASS 90 OR 105

INSULATING MATERIALS. The nylon shall be of good quality and substantially free from knots, ravelings, foreign matter and other irregularities.

THERMAL CLASS. 90°C unimpregnated or 105°C impregnated, as defined in Part 3, para. 3.58.1.2.

GENERAL REQUIREMENTS. See Part 1.

Characteristics	Test Procedure, See Part 3, Paragraph	Requirements
1. DIMENSIONS	3.1.1.2	See Table D (MW 22-C)
3. ELONGATION	3.3.1.2	Not less than the following:

AWG Size	Minimum Elongation Percent
24–34	20
35–40	15

11. COVERAGE	3.11.1.2	The covering shall not open sufficiently to expose the bare or film coated wire

Copyright National Electrical Manufacturers Association
Provided by IHS under license with NEMA
No reproduction or networking permitted without license from IHS
Not for Resale

9009279 0001539 175

DOUBLE NYLON FIBER COVERED BARE OR FILM COATED ROUND COPPER MAGNET WIRE THERMAL CLASS 90 OR 105

Table D (MW 22-C)

AWG Size	Bare Wire Diameter, Inches†			Minimum Increase, Two Layers of Nylon Fiber		Maximum Overall Diameter						AWG Size
						Bare		Single Film		Heavy Film		
	Minimum	Nominal	Maximum	inches	mm	inches	mm	inches	mm	inches	mm	
24	0.0199	0.0201	0.0202 *	0.0026	0.066	0.0246	0.625	0.0261	0.663	0.0271	0.688	24
25	0.0177	0.0179	0.0180 *	0.0026	0.066	0.0234	0.569	0.0238	0.605	0.0247	0.627	25
26	0.0157	0.0159	0.0160 *	0.0026	0.066	0.0204	0.518	0.0217	0.551	0.0226	0.574	26
27	0.0141	0.0142	0.0143	0.0026	0.066	0.0187	0.475	0.0200	0.508	0.0208	0.528	27
28	0.0125	0.0126	0.0127	0.0026	0.066	0.0171	0.434	0.0184	0.467	0.0191	0.485	28
29	0.0112	0.0113	0.0114	0.0026	0.066	0.0158	0.401	0.0170	0.432	0.0177	0.450	29
30	0.0099	0.0100	0.0101	0.0026	0.066	0.0145	0.368	0.0156	0.396	0.0163	0.414	30
31	0.0088	0.0089	0.0090	0.0026	0.066	0.0134	0.340	0.0144	0.366	0.0152	0.386	31
32	0.0079	0.0080	0.0081	0.0026	0.066	0.0125	0.318	0.0135	0.343	0.0142	0.361	32
33	0.0070	0.0071	0.0072	0.0026	0.066	0.0116	0.295	0.0125	0.318	0.0132	0.335	33
34	0.0062	0.0063	0.0064	0.0026	0.066	0.0108	0.274	0.0116	0.295	0.0122	0.310	34
35	0.0055	0.0056	0.0057	0.0026	0.066	0.0101	0.257	0.0108	0.274	0.0114	0.290	35
36	0.0049	0.0050	0.0051	0.0026	0.066	0.0095	0.241	0.0102	0.259	0.0107	0.272	36
37	0.0044	0.0045	0.0046	0.0026	0.066	0.0090	0.229	0.0096	0.244	0.0101	0.257	37
38	0.0039	0.0040	0.0041	0.0026	0.066	0.0085	0.216	0.0091	0.231	0.0095	0.241	38
39	0.0034	0.0035	0.0036	0.0026	0.066	0.0080	0.203	0.0085	0.216	0.0089	0.226	39
40	0.0030	0.0031	0.0032	0.0026	0.066	0.0076	0.193	0.0081	0.206	0.0084	0.213	40

*This maximum bare diameter shall be permitted to be exceeded; see 1.4.9.1.
†For metric equivalents, see 1.5.
NOTE: For direct conversion of inches to millimeters, multiply inches by the factor 25.4 (exact). (This note approved as Authorized Engineering Information 3-11-1987.)

Copyright National Electrical Manufacturers Association
Provided by IHS under license with NEMA
No reproduction or networking permitted without license from IHS
Not for Resale

9009279 0001540 997

POLYESTER (AMIDE) (IMIDE) OVERCOATED WITH POLYAMIDE, SINGLE ENAMELLED ROUND ALUMINUM MAGNET WIRE THERMAL CLASS 155

INSULATING MATERIALS. The conductor shall be coated with a dual film. The underlying coating is based on polyester (amide) (imide) resins (1.2.2.2). The superimposed coating is based on polyamide resins (1.2.2.2).

THERMAL CLASS. 155°C when tested in accordance with Part 1, para. 1.6 and Part 3, para. 3.58.1.1.

GENERAL REQUIREMENTS. See Part 1.

Characteristics	Test Procedure, See Part 3, Paragraph	Requirements
1. DIMENSIONS	3.1.1.1	See Table S (MW 24-A)
2. ADHERENCE AND FLEXIBILITY	3.2.1.1	No cracks visible in the film coating
3. ELONGATION	3.3.1.1	Not less than value in Table S (MW 24-A)
4. HEAT SHOCK	3.4.1.1	No cracks visible in the film coating after conditioning at 175°C
7. DIELECTRIC STRENGTH	3.7.1.1	Not less than value in Table S (MW 24-A)
8. CONTINUITY	3.8.1.1	The number of discontinuities shall not exceed 25 when tested in accordance with the following: 14–24 AWG para. 3.8.1.1.1

PERIODIC CONFORMANCE TESTS

50. THERMOPLASTIC FLOW	3.50.1.1	Median not less than 200°C with heavy film coated 18 AWG
51. SOLUBILITY	3.51.1.1	Two specimens of heavy film coated 18 AWG immersed in: xylene; 50/50 xylene/ethyl Cellosolve; shall not soften sufficiently to expose the bare conductor
52. DIELECTRIC STRENGTH AT RATED TEMPERATURE	3.52.1.1	Average not less than 3825 volts with heavy film coated 18 AWG
59. SCRAPE RESISTANCE	3.59.1.1	Lowest "grams-to-fail" load for any one of the three tests and the average of the three tests shall be not less than the values in Table S (MW 24-A)

Copyright National Electrical Manufacturers Association
Provided by IHS under license with NEMA
No reproduction or networking permitted without license from IHS
Not for Resale

POLYESTER (AMIDE) (IMIDE) OVERCOATED WITH POLYAMIDE, SINGLE ENAMELLED ROUND ALUMINUM MAGNET WIRE
THERMAL CLASS 155
Table S (MW 24-A)

AWG Size	Bare Wire Diameter, Inches†			Insulation†		Elongation,	Scrape, Grams to Fail		Dielectric Strength,	AWG Size
	Minimum	Nominal	Maximum	Minimum Increase in Diameter, Inches	Maximum Overall Diameter, Inches	Minimum Percent	Average	Minimum	Minimum Breakdown Volts	
14	0.0635	0.0641	0.0644*	0.0016	0.0666	15	505	430	3175	14
15	0.0565	0.0571	0.0574*	0.0015	0.0594	15	470	400	3075	15
16	0.0503	0.0508	0.0511*	0.0014	0.0531	15	440	375	3000	16
17	0.0448	0.0453	0.0455*	0.0014	0.0475	15	415	350	2925	17
18	0.0399	0.0403	0.0405*	0.0013	0.0424	15	390	330	2850	18
19	0.0355	0.0359	0.0361*	0.0012	0.0379	15	360	305	2775	19
20	0.0317	0.0320	0.0322*	0.0012	0.0339	14	335	285	2700	20
21	0.0282	0.0285	0.0286*	0.0011	0.0303	14	315	265	2625	21
22	0.0250	0.0253	0.0254*	0.0011	0.0270	14	295	250	2575	22
23	0.0224	0.0226	0.0227*	0.0010	0.0243	14	275	235	2500	23
24	0.0199	0.0201	0.0202*	0.0010	0.0217	13	260	220	2425	24

*This maximum bare diameter shall be permitted to be exceeded; see 1.4.9.1.
†For metric equivalents, see 1.5.
NOTE: For direct conversion of inches to millimeters, multiply inches by the factor 25.4 (exact). (This note approved as Authorized Engineering Information 3-11-1987.)

Copyright National Electrical Manufacturers Association
Provided by IHS under license with NEMA
No reproduction or networking permitted without license from IHS
Not for Resale

9009279 0001542 76T

POLYESTER (AMIDE) (IMIDE) OVERCOATED WITH POLYAMIDE, HEAVY ENAMELLED ROUND ALUMINUM MAGNET WIRE THERMAL CLASS 155

INSULATING MATERIALS. The conductor shall be coated with a dual film. The underlying coating is based on polyester (amide) (imide) resins (1.2.2.2). The superimposed coating is based on a blend of polyamide resins (1.2.2.2).

THERMAL CLASS. 155°C when tested in accordance with Part 1, para. 1.6 and Part 3, para. 3.58.1.1.

GENERAL REQUIREMENTS. See Part 1.

Characteristics	Test Procedure, See Part 3, Paragraph	Requirements
1. DIMENSIONS	3.1.1.1	See Table H (MW 24-A)
2. ADHERENCE AND FLEXIBILITY	3.2.1.1	No cracks visible in the film coating
3. ELONGATION	3.3.1.1	Not less than value in Table H (MW 24-A)
4. HEAT SHOCK	3.4.1.1	No cracks visible in the film coating after conditioning at 175°C
6. SPRINGBACK	3.6.2.1	Not greater than 4°
7. DIELECTRIC STRENGTH	3.7.1.1	Not less than value in Table H (MW 24-A)
8. CONTINUITY	3.8.1.1	The number of discontinuities shall not exceed 10 for 14–24 AWG when tested in accordance with the following: 14–24 AWG para. 3.8.1.1.1
PERIODIC CONFORMANCE TESTS		
50. THERMOPLASTIC FLOW	3.50.1.1	Median not less than 200°C with heavy film coated 18 AWG
51. SOLUBILITY	3.51.1.1	Two specimens of heavy film coated 18 AWG immersed in: xylene 50/50 xylene/ethyl Cellosolve shall not soften sufficiently to expose the bare conductor
52. DIELECTRIC STRENGTH AT RATED TEMPERATURE	3.52.1.1	Average not less than 3825 volts with heavy film coated 18 AWG
59. SCRAPE RESISTANCE	3.59.1.1	Lowest "grams-to-fail" load for any one of the three tests and the average of the three tests shall be not less than the values in Table H (MW 24-A)

Copyright National Electrical Manufacturers Association
Provided by IHS under license with NEMA
No reproduction or networking permitted without license from IHS
Not for Resale

9009279 0001543 6T5

POLYESTER (AMIDE) (IMIDE) OVERCOATED WITH POLYAMIDE, HEAVY ENAMELLED ROUND ALUMINUM MAGNET WIRE
THERMAL CLASS 155
Table H (MW 24-A)

AWG Size	Bare Wire Diameter, Inches†			Insulation†		Elongation, Minimum Percent	Scrape, Grams to Fail		Dielectric Strength, Minimum Breakdown Volts	AWG Size
	Minimum	Nominal	Maximum	Minimum Increase in Diameter, Inches	Maximum Overall Diameter, Inches		Average	Minimum		
10	0.1009	0.1019	0.1024 *	0.0031	0.1061	15	895	760	5575	10
11	0.0898	0.0907	0.0912 *	0.0030	0.0948	15	895	760	5400	11
12	0.0800	0.0808	0.0812 *	0.0029	0.0847	15	895	760	5225	12
13	0.0713	0.0720	0.0724 *	0.0028	0.0757	15	895	760	5050	13
14	0.0635	0.0641	0.0644 *	0.0032	0.0682	15	895	760	5700	14
15	0.0565	0.0571	0.0574 *	0.0030	0.0609	15	840	715	5550	15
16	0.0503	0.0508	0.0511*	0.0029	0.0545	15	785	670	5400	16
17	0.0448	0.0453	0.0455*	0.0028	0.0488	15	740	625	5275	17
18	0.0399	0.0403	0.0405*	0.0026	0.0437	15	690	590	5125	18
19	0.0355	0.0359	0.0361 *	0.0025	0.0391	15	640	545	5000	19
20	0.0317	0.0320	0.0322 *	0.0023	0.0351	14	600	510	4850	20
21	0.0282	0.0285	0.0286 *	0.0022	0.0314	14	565	480	4725	21
22	0.0250	0.0253	0.0254 *	0.0021	0.0281	14	530	450	4625	22
23	0.0224	0.0226	0.0227 *	0.0020	0.0253	14	490	420	4500	23
24	0.0199	0.0201	0.0202 *	0.0019	0.0227	13	460	395	4375	24

*This maximum bare diameter shall be permitted to be exceeded; see 1.4.9.1.
†For metric equivalents, see 1.5.
NOTE: For direct conversion of inches to millimeters, multiply inches by the factor 25.4 (exact). (This note approved as Authorized Engineering Information 3-11-1987.)

Copyright National Electrical Manufacturers Association
Provided by IHS under license with NEMA
No reproduction or networking permitted without license from IHS
Not for Resale

9009279 0001544 532

POLYESTER (AMIDE) (IMIDE) OVERCOATED WITH POLYAMIDE, SINGLE ENAMELLED ROUND COPPER MAGNET WIRE THERMAL CLASS 155

INSULATING MATERIALS. The conductor shall be coated with a dual film. The underlying coating is based on polyester (amide) (imide) resins (1.2.2.2). The superimposed coating is based on a blend of polyamide resins (1.2.2.2).

THERMAL CLASS. 155°C when tested in accordance with Part 1, para. 1.6 and Part 3, para. 3.58.1.1.

GENERAL REQUIREMENTS. See Part 1.

Characteristics	Test Procedure, See Part 3, Paragraph	Requirements
1. DIMENSIONS	3.1.1.1	See Table S (MW 24-C)
2. ADHERENCE AND FLEXIBILITY	3.2.1.1	No cracks visible in the film coating
3. ELONGATION	3.3.1.1	Not less than value in Table S (MW 24-C)
4. HEAT SHOCK	3.4.1.1	No cracks visible in the film coating after conditioning at 175°C
6. SPRINGBACK	3.6.1.1	Not greater than value in Table S (MW 24-C)
7. DIELECTRIC STRENGTH	3.7.1.1	Not less than value in Table S (MW 24-C)
8. CONTINUITY	3.8.1.1	The number of discontinuities shall not exceed 25 when tested in accordance with the following: 14–30 AWG para. 3.8.1.1.1
PERIODIC CONFORMANCE TESTS		
50. THERMOPLASTIC FLOW	3.50.1.1	Median not less than 200°C with heavy film coated 18 AWG
51. SOLUBILITY	3.51.1.1	Two specimens of heavy film coated in 18 AWG immersed in: xylene 50/50 xylene/ethyl Cellosolve shall not soften sufficiently to expose the bare conductor
52. DIELECTRIC STRENGTH AT RATED TEMPERATURE	3.52.1.1	Average not less than 3825 volts with heavy film coated wire 18 AWG
59. SCRAPE RESISTANCE	3.59.1.1	Lowest "grams-to-fail" load for any one of the three tests and the average of the three tests shall be not less than the values in Table S (MW 24-C)

Copyright National Electrical Manufacturers Association
Provided by IHS under license with NEMA
No reproduction or networking permitted without license from IHS
Not for Resale

9009279 0001545 479

POLYESTER (AMIDE) (IMIDE) OVERCOATED WITH POLYAMIDE, SINGLE ENAMELLED ROUND COPPER MAGNET WIRE
THERMAL CLASS 155
Table S (MW 24-C)

AWG Size	Bare Wire Diameter, Inches†			Insulation†		Elongation, Minimum Percent	Scrape, Grams to Fail		Springback, Maximum Degrees per Turn	Dielectric Strength, Minimum Breakdown Volts	AWG Size
	Minimum	Nominal	Maximum	Minimum Increase in Diameter, Inches	Maximum Overall Diameter, Inches		Average	Minimum			
14	0.0635	0.0641	0.0644 *	0.0016	0.0666	33	840	715	42	3175	14
15	0.0565	0.0571	0.0574 *	0.0015	0.0594	33	780	665	46	3075	15
16	0.0503	0.0508	0.0511 *	0.0014	0.0531	33	735	625	50	3000	16
17	0.0448	0.0453	0.0455 *	0.0014	0.0475	32	690	585	54	2925	17
18	0.0399	0.0403	0.0405 *	0.0013	0.0424	32	645	550	58	2850	18
19	0.0355	0.0359	0.0361 *	0.0012	0.0379	31	600	510	62	2775	19
20	0.0317	0.0320	0.0322 *	0.0012	0.0339	30	560	475	66	2700	20
21	0.0282	0.0285	0.0286 *	0.0011	0.0303	30	525	445	53	2625	21
22	0.0250	0.0253	0.0254 *	0.0011	0.0270	29	490	415	58	2575	22
23	0.0224	0.0226	0.0227 *	0.0010	0.0243	29	460	390	62	2500	23
24	0.0199	0.0201	0.0202 *	0.0010	0.0217	28	430	365	67	2425	24
25	0.0177	0.0179	0.0180 *	0.0009	0.0194	28	400	340	72	2375	25
26	0.0157	0.0159	0.0160 *	0.0009	0.0173	27	380	325	76	2300	26
27	0.0141	0.0142	0.0143	0.0008	0.0156	27	355	300	50	2250	27
28	0.0125	0.0126	0.0127	0.0008	0.0140	26	335	285	55	2175	28
29	0.0112	0.0113	0.0114	0.0007	0.0126	26	310	265	61	2150	29
30	0.0099	0.0100	0.0101	0.0007	0.0112	25	295	250	66	2075	30

*This maximum bare diameter shall be permitted to be exceeded; see 1.4.9.1.
†For metric equivalents, see 1.5.
NOTE: For direct conversion of inches to millimeters, multiply inches by the factor 25.4 (exact). (This note approved as Authorized Engineering Information 3-11-1987.)

Copyright National Electrical Manufacturers Association
Provided by IHS under license with NEMA
No reproduction or networking permitted without license from IHS
Not for Resale

9009279 0001546 305

POLYESTER (AMIDE) (IMIDE) OVERCOATED WITH POLYAMIDE, HEAVY ENAMELLED ROUND COPPER MAGNET WIRE THERMAL CLASS 155

INSULATING MATERIALS. The conductor shall be coated with a dual film. The underlying coating is based on polyester (amide) (imide) resins (1.2.2.2). The superimposed coating is based on a blend of polyamide resins (1.2.2.2).

THERMAL CLASS. 155°C when tested in accordance with Part 1, para. 1.6 and Part 3, para. 3.58.1.1.

GENERAL REQUIREMENTS. See Part 1.

Characteristics	Test Procedure, See Part 3, Paragraph	Requirements
1. DIMENSIONS	3.1.1.1	See Table H (MW 24-C)
2. ADHERENCE AND FLEXIBILITY	3.2.1.1	No cracks visible in the film coating
3. ELONGATION	3.3.1.1	Not less than value in Table H (MW 24-C)
4. HEAT SHOCK	3.4.1.1	No cracks visible in the film coating after conditioning at 175°C
6. SPRINGBACK	3.6.1.1 3.6.2.1	Not greater than value in Table H (MW 24-C) Not greater than 5°
7. DIELECTRIC STRENGTH	3.7.1.1	Not less than value in Table H (MW 24-C)
8. CONTINUITY	3.8.1.1	The number of discontinuities shall not exceed 5 for 14–24 AWG or 7 for 25–30 AWG when tested in accordance with the following: 14–30 AWG para. 3.8.1.1.1
PERIODIC CONFORMANCE TESTS		
50. THERMOPLASTIC FLOW	3.50.1.1	Median not less than 200°C with heavy film coated 18 AWG
51. SOLUBILITY	3.51.1.1	Two specimens of heavy film coated 18 AWG immersed in: xylene 50/50 xylene/ethyl Cellosolve shall not soften sufficiently to expose the bare conductor
52. DIELECTRIC STRENGTH AT RATED TEMPERATURE	3.52.1.1	Average not less than 3825 volts with heavy film coated 18 AWG
59. SCRAPE RESISTANCE	3.59.1.1	Lowest "grams-to-fail" load for any one of the three tests and the average of the three tests shall be not less than the values in Table H (MW 24-C)

Copyright National Electrical Manufacturers Association
Provided by IHS under license with NEMA
No reproduction or networking permitted without license from IHS
Not for Resale

9009279 0001547 241

POLYESTER (AMIDE) (IMIDE) OVERCOATED WITH POLYAMIDE, HEAVY ENAMELLED ROUND COPPER MAGNET WIRE
THERMAL CLASS 155
Table H (MW 24-C)

AWG Size	Bare Wire Diameter, Inches†			Insulation†		Elongation, Minimum Percent	Scrape, Grams to Fail		Springback, Maximum Degrees per Turn	Dielectric Strength, Minimum Breakdown Volts	AWG Size
	Minimum	Nominal	Maximum	Minimum Increase in Diameter, Inches	Maximum Overall Diameter, Inches		Average	Minimum			
10	0.1009	0.1019	0.1024 *	0.0031	0.1061	35	1490	1270	..	5575	10
11	0.0898	0.0907	0.0912 *	0.0030	0.0948	35	1490	1270	..	5400	11
12	0.0800	0.0808	0.0812 *	0.0029	0.0847	34	1490	1270	..	5225	12
13	0.0713	0.0720	0.0724 *	0.0028	0.0757	34	1490	1270	..	5050	13
14	0.0635	0.0641	0.0644 *	0.0032	0.0682	33	1490	1270	42	5700	14
15	0.0565	0.0571	0.0574 *	0.0030	0.0609	33	1400	1190	46	5550	15
16	0.0503	0.0508	0.0511 *	0.0029	0.0545	33	1310	1115	50	5400	16
17	0.0448	0.0453	0.0455 *	0.0028	0.0488	32	1230	1045	54	5275	17
18	0.0399	0.0403	0.0405 *	0.0026	0.0437	32	1150	980	58	5125	18
19	0.0355	0.0359	0.0361 *	0.0025	0.0391	31	1070	910	62	5000	19
20	0.0317	0.0320	0.0322 *	0.0023	0.0351	30	1000	850	66	4850	20
21	0.0282	0.0285	0.0286 *	0.0022	0.0314	30	940	800	53	4725	21
22	0.0250	0.0253	0.0254 *	0.0021	0.0281	29	880	750	58	4625	22
23	0.0224	0.0226	0.0227 *	0.0020	0.0253	29	820	700	62	4500	23
24	0.0199	0.0201	0.0202 *	0.0019	0.0227	28	770	655	67	4375	24
25	0.0177	0.0179	0.0180 *	0.0018	0.0203	28	720	615	72	4250	25
26	0.0157	0.0159	0.0160 *	0.0017	0.0182	27	675	575	76	4150	26
27	0.0141	0.0142	0.0143	0.0016	0.0164	27	635	540	80	4050	27
28	0.0125	0.0126	0.0127	0.0016	0.0147	26	595	510	55	3950	28
29	0.0112	0.0113	0.0114	0.0015	0.0133	26	560	480	61	3825	29
30	0.0099	0.0100	0.0101	0.0014	0.0119	25	525	450	66	3725	30

*This maximum bare diameter shall be permitted to be exceeded; see 1.4.9.1.
†For metric equivalents, see 1.5.
NOTE: For direct conversion of inches to millimeters, multiply inches by the factor 25.4 (exact). (This note approved as Authorized Engineering Information 3-11-1987.)

Copyright National Electrical Manufacturers Association
Provided by IHS under license with NEMA
No reproduction or networking permitted without license from IHS
Not for Resale

9009279 0001548 188

POLYESTER (AMIDE) (IMIDE) OVERCOATED WITH POLYAMIDE, TRIPLE ENAMELLED ROUND COPPER MAGNET WIRE THERMAL CLASS 155

INSULATING MATERIALS. The conductor shall be coated with a dual film. The underlying coating is based on polyester (amide) (imide) resins (1.2.2.2). The superimposed coating is based on a blend of polyamide resins (1.2.2.2).

THERMAL CLASS. 155°C when tested in accordance with Part 1, para. 1.6 and Part 3, para. 3.58.1.1.

GENERAL REQUIREMENTS. See Part 1.

Characteristics	Test Procedure, See Part 3, Paragraph	Requirements
1. DIMENSIONS	3.1.1.1	See Table T (MW 24-C)
2. ADHERENCE AND FLEXIBILITY	3.2.1.1	No cracks visible in the film coating
3. ELONGATION	3.3.1.1	Not less than value in Table T (MW 24-C)
4. HEAT SHOCK	3.4.1.1	No cracks visible in the film coating after conditioning at 175°C
6. SPRINGBACK	3.6.1.1	Not greater than value in Table T (MW 24-C)
7. DIELECTRIC STRENGTH	3.7.1.1	Not less than value in Table T (MW 24-C)
8. CONTINUITY	3.8.1.1	The number of discontinuities shall not exceed 3 for 14–24 AWG or 5 for 25–30 AWG when tested in accordance with the following: 14–30 AWG para. 3.8.1.1.1
PERIODIC CONFORMANCE TESTS		
50.. THERMOPLASTIC FLOW	3.50.1.1	Median not less than 200°C with heavy film coated 18 AWG
51. SOLUBILITY	3.51.1.1	Two specimens of heavy film coated 18 AWG immersed in: xylene 50/50 xylene/ethyl Cellosolve shall not soften sufficiently to expose the bare conductor
52. DIELECTRIC STRENGTH AT RATED TEMPERATURE	3.52.1.1	Average not less than 3825 volts with heavy film coated 18 AWG
59. SCRAPE RESISTANCE	3.59.1.1	Lowest "grams-to-fail" load for any one of the three tests and the average of the three tests shall be not less than the values in Table T (MW 24-C)

Copyright National Electrical Manufacturers Association
Provided by IHS under license with NEMA
No reproduction or networking permitted without license from IHS
Not for Resale

9009279 0001549 014

POLYESTER (AMIDE) (IMIDE) OVERCOATED WITH POLYAMIDE, TRIPLE ENAMELLED ROUND COPPER MAGNET WIRE
THERMAL CLASS 155
Table T (MW 24-C)

AWG Size	Bare Wire Diameter, Inches†			Insulation†		Elongation, Minimum	Scrape, Grams to Fail		Springback, Maximum	Dielectric Strength, Minimum	AWG Size
	Minimum	Nominal	Maximum	Minimum Increase in Diameter, Inches	Maximum Overall Diameter, Inches	Percent	Average	Minimum	Degrees per Turn	Breakdown Volts	
14	0.0635	0.0641	0.0644*	0.0048	0.0700	33	1735	1475	46	7600	14
15	0.0565	0.0571	0.0574*	0.0045	0.0627	33	1620	1375	49	7400	15
16	0.0503	0.0508	0.0511*	0.0043	0.0562	33	1525	1295	53	7200	16
17	0.0448	0.0453	0.0455*	0.0041	0.0504	32	1425	1210	58	7025	17
18	0.0399	0.0403	0.0405*	0.0039	0.0452	32	1325	1135	62	6850	18
19	0.0355	0.0359	0.0361*	0.0037	0.0406	31	1255	1065	66	6675	19
20	0.0317	0.0320	0.0322*	0.0035	0.0364	30	1180	1000	70	6475	20
21	0.0282	0.0285	0.0286*	0.0033	0.0326	30	1115	945	53	6325	21
22	0.0250	0.0253	0.0254*	0.0032	0.0293	29	1045	890	58	6175	22
23	0.0224	0.0226	0.0227*	0.0030	0.0264	29	975	830	64	6000	23
24	0.0199	0.0201	0.0202*	0.0029	0.0238	28	910	770	69	5850	24
25	0.0177	0.0179	0.0180*	0.0027	0.0214	28	850	720	74	5700	25
26	0.0157	0.0159	0.0160*	0.0026	0.0193	27	795	675	80	5525	26
27	0.0141	0.0142	0.0143	0.0024	0.0173	27	735	625	55	5400	27
28	0.0125	0.0126	0.0127	0.0023	0.0156	26	690	585	60	5275	28
29	0.0112	0.0113	0.0114	0.0022	0.0142	26	645	550	65	5125	29
30	0.0099	0.0100	0.0101	0.0021	0.0128	25	605	515	70	5000	30

*This maximum bare diameter shall be permitted to be exceeded; see 1.4.9.1.
†For metric equivalents, see 1.5.
NOTE: For direct conversion of inches to millimeters, multiply inches by the factor 25.4 (exact). (This note approved as Authorized Engineering Information 3-11-1987.)

Copyright National Electrical Manufacturers Association
Provided by IHS under license with NEMA
No reproduction or networking permitted without license from IHS
Not for Resale

9009279 0001550 836

POLYESTER (IMIDE), SINGLE ENAMELLED ROUND COPPER MAGNET WIRE FOR SOLDERABLE APPLICATIONS THERMAL CLASS 155

• INSULATING MATERIALS. The coating is based on polyester (imide) resins (1.2.2.2).

THERMAL CLASS. 155°C when tested in accordance with Part 1, para. 1.6 and Part 3, para. 3.58.1.1.

GENERAL REQUIREMENTS. See Part 1.

Characteristics	Test Procedure, See Part 3, Paragraph	Requirements
1. DIMENSIONS	3.1.1.1	See Table S (MW 26-C)
2. ADHERENCE AND FLEXIBILITY	3.2.1.1	No cracks visible in the film coating
3. ELONGATION	3.3.1.1	Not less than value in Table S (MW 26-C)
4. HEAT SHOCK	3.4.1.1	No cracks visible in the film coating after conditioning at 175°C
6. SPRINGBACK	3.6.1.1	Not greater than value in Table S (MW 26-C)
7. DIELECTRIC STRENGTH	3.7.1.1	Not less than value in Table S (MW 26-C)
8. CONTINUITY	3.8.1.1	The number of discontinuities shall not exceed 25 when tested in accordance with the following: 25–30 AWG para. 3.8.1.1.1 31–44 AWG para. 3.8.1.1.1 or 3.8.1.1.2
12. SOLDERABILITY	3.12.1.1	Covered with continuous film of solder after immersion at 455°C as follows: 25–29 AWG 6 seconds 30–36 AWG 5 seconds 37–44 AWG 4 seconds

PERIODIC CONFORMANCE TESTS

50. THERMOPLASTIC FLOW	3.50.1.1	Median not less than 225°C with heavy film coated 36 AWG
51. SOLUBILITY	3.51.1.1	A specimen of heavy film coated 36 AWG immersed in xylene shall not soften sufficiently to expose the bare conductor
52. DIELECTRIC STRENGTH AT RATED TEMPERATURE	3.52.1.1	Heavy film coated wire shall average not less than 1900 volts for 36 AWG
59. SCRAPE RESISTANCE	3.59.1.1	Lowest "grams-to-fail" load for any one of the three tests and the average of the three tests shall be not less than the values in Table S (MW 26-C)

Copyright National Electrical Manufacturers Association
Provided by IHS under license with NEMA
No reproduction or networking permitted without license from IHS
Not for Resale

POLYESTER (IMIDE), SINGLE ENAMELLED ROUND COPPER MAGNET WIRE FOR SOLDERABLE APPLICATIONS THERMAL CLASS 155

Table S (MW 26-C)

AWG Size	Bare Wire Diameter, Inches†			Insulation†		Elongation, Minimum Percent	Scrape, Grams to Fail		Springback, Maximum Degrees per Turn	Dielectric Strength, Minimum Breakdown Volts	AWG Size
	Minimum	Nominal	Maximum	Minimum Increase in Diameter, Inches	Maximum Overall Diameter, Inches		Average	Minimum			
25	0.0177	0.0179	0.0180 *	0.0009	0.0194	28	350	300	72	2625	25
26	0.0157	0.0159	0.0160 *	0.0009	0.0173	27	335	285	76	2550	26
27	0.0141	0.0142	0.0143	0.0008	0.0156	27	310	265	80	2500	27
28	0.0125	0.0126	0.0127	0.0008	0.0140	26	295	250	56	2425	28
29	0.0112	0.0113	0.0114	0.0007	0.0126	26	275	235	61	2375	29
30	0.0099	0.0100	0.0101	0.0007	0.0112	25	260	220	66	2300	30
31	0.0088	0.0089	0.0090	0.0006	0.0100	24	...	...	..	2075	31
32	0.0079	0.0080	0.0081	0.0006	0.0091	24	...	...	..	1850	32
33	0.0070	0.0071	0.0072	0.0005	0.0081	23	...	...	..	1675	33
34	0.0062	0.0063	0.0064	0.0005	0.0072	22	...	...	..	1500	34
35	0.0055	0.0056	0.0057	0.0004	0.0064	21	...	...	..	1325	35
36	0.0049	0.0050	0.0051	0.0004	0.0058	20	...	...	..	1200	36
37	0.0044	0.0045	0.0046	0.0003	0.0052	20	...	...	..	1075	37
38	0.0039	0.0040	0.0041	0.0003	0.0047	19	...	...	..	950	38
39	0.0034	0.0035	0.0036	0.0002	0.0041	18	...	...	..	850	39
40	0.0030	0.0031	0.0032	0.0002	0.0037	17	...	...	..	775	40
41	0.0027	0.0028	0.0029	0.0002	0.0033	17	...	...	..	700	41
42	0.0024	0.0025	0.0026	0.0002	0.0030	16	...	...	..	625	42
43	0.0021	0.0022	0.0023	0.0002	0.0026	15	...	...	..	550	43
44	0.0019	0.0020	0.0021	0.0001	0.0024	14	...	...	..	500	44

*This maximum bare diameter shall be permitted to be exceeded; see 1.4.9.1.
†For metric equivalents, see 1.5.
NOTE: For direct conversion of inches to millimeters, multiply inches by the factor 25.4 (exact). (This note approved as Authorized Engineering Information 3-11-1987.)

Copyright National Electrical Manufacturers Association
Provided by IHS under license with NEMA
No reproduction or networking permitted without license from IHS
Not for Resale

9009279 0001552 609

POLYESTER (IMIDE), HEAVY
ENAMELLED ROUND COPPER MAGNET WIRE FOR SOLDERABLE APPLICATIONS
THERMAL CLASS 155

INSULATING MATERIALS. The coating is based on polyester (imide) resins (1.2.2.2).

THERMAL CLASS. 155°C when tested in accordance with Part 1, para. 1.6 and Part 3, para. 3.58.1.1.

GENERAL REQUIREMENTS. See Part 1.

Characteristics	Test Procedure, See Part 3, Paragraph	Requirements
1. DIMENSIONS	3.1.1.1	See Table H (MW 26-C)
2. ADHERENCE AND FLEXIBILITY	3.2.1.1	No cracks visible in the film coating
3. ELONGATION	3.3.1.1	Not less than value in Table H (MW 26-C)
4. HEAT SHOCK	3.4.1.1	No cracks visible in the film coating after conditioning at 175°C
6. SPRINGBACK	3.6.1.1	Not greater than value in Table H (MW 26-C)
7. DIELECTRIC STRENGTH	3.7.1.1	Not less than value in Table H (MW 26-C)
8. CONTINUITY	3.8.1.1	The number of discontinuities shall not exceed 7 for 25–30 AWG or 5 for 31–44 AWG when tested in accordance with the following: 25–30 AWG para. 3.8.1.1.1 31–44 AWG para. 3.8.1.1.1 or 3.8.1.1.2
12. SOLDERABILITY	3.12.1.1	Covered with continuous film of solder after immersion at 455°C as follows: 25–29 AWG 6 seconds 30–36 AWG 5 seconds 37–44 AWG 4 seconds

PERIODIC CONFORMANCE TESTS

50. THERMOPLASTIC FLOW	3.50.1.1	Median not less than 225°C with heavy film coated 36 AWG
51. SOLUBILITY	3.51.1.1	A specimen of heavy film coated 36 AWG immersed in xylene shall not soften sufficiently to expose the bare conductor
52. DIELECTRIC STRENGTH AT RATED TEMPERATURE	3.52.1.1	Heavy film coated wire shall average not less than 1900 volts for 36 AWG
59. SCRAPE RESISTANCE	3.59.1.1	Lowest "grams-to-fail" load for any one of the three tests and the average of the three tests shall be not less than the values in Table H (MW 26-C)

Copyright National Electrical Manufacturers Association
Provided by IHS under license with NEMA
No reproduction or networking permitted without license from IHS
Not for Resale

POLYESTER (IMIDE), HEAVY
ENAMELLED ROUND COPPER MAGNET WIRE FOR SOLDERABLE APPLICATIONS
THERMAL CLASS 155
Table H (MW 26-C)

AWG Size	Bare Wire Diameter, Inches†			Insulation†		Elongation, Minimum Percent	Scrape, Grams to Fail		Springback, Maximum Degrees per Turn	Dielectric Strength, Minimum Breakdown Volts	AWG Size
	Minimum	Nominal	Maximum	Minimum Increase in Diameter, Inches	Maximum Overall Diameter, Inches		Average	Minimum			
25	0.0177	0.0179	0.0180 *	0.0018	0.0203	28	635	540	72	4725	25
26	0.0157	0.0159	0.0160 *	0.0017	0.0182	27	595	505	76	4600	26
27	0.0141	0.0142	0.0143	0.0016	0.0164	27	560	475	50	4500	27
28	0.0125	0.0126	0.0127	0.0016	0.0147	26	525	450	55	4375	28
29	0.0112	0.0113	0.0114	0.0015	0.0133	26	495	420	61	4250	29
30	0.0099	0.0100	0.0101	0.0014	0.0119	25	460	395	66	4150	30
31	0.0088	0.0089	0.0090	0.0013	0.0108	24	...	...	..	3825	31
32	0.0079	0.0080	0.0081	0.0012	0.0098	24	...	...	..	3525	32
33	0.0070	0.0071	0.0072	0.0011	0.0088	23	...	...	..	3250	33
34	0.0062	0.0063	0.0064	0.0010	0.0078	22	...	...	..	2975	34
35	0.0055	0.0056	0.0057	0.0009	0.0070	21	...	...	..	2750	35
36	0.0049	0.0050	0.0051	0.0008	0.0063	20	...	...	..	2525	36
37	0.0044	0.0045	0.0046	0.0008	0.0057	20	...	...	..	2325	37
38	0.0039	0.0040	0.0041	0.0007	0.0051	19	...	...	..	2150	38
39	0.0034	0.0035	0.0036	0.0006	0.0045	18	...	...	..	1975	39
40	0.0030	0.0031	0.0032	0.0006	0.0040	17	...	...	..	1800	40
41	0.0027	0.0028	0.0029	0.0005	0.0036	17	...	...	..	1675	41
42	0.0024	0.0025	0.0026	0.0004	0.0032	16	...	...	..	1525	42
43	0.0021	0.0022	0.0023	0.0004	0.0029	15	...	...	..	1400	43
44	0.0019	0.0020	0.0021	0.0004	0.0027	14	...	...	..	1300	44

*This maximum bare diameter shall be permitted to be exceeded; see 1.4.9.1.
†For metric equivalents, see 1.5.
NOTE: For direct conversion of inches to millimeters, multiply inches by the factor 25.4 (exact). (This note approved as Authorized Engineering Information 3-11-1987.)

Copyright National Electrical Manufacturers Association
Provided by IHS under license with NEMA
No reproduction or networking permitted without license from IHS
Not for Resale

9009279 0001554 481

POLYESTER (IMIDE) OVERCOATED WITH POLYAMIDE, SINGLE ENAMELLED ROUND COPPER MAGNET WIRE FOR SOLDERABLE APPLICATIONS THERMAL CLASS 155

INSULATING MATERIALS. The conductor shall be coated with a dual film. The underlying coating is based on polyester (imide) resins (1.2.2.2). The superimposed coating is based on polyamide resins (1.2.2.2).

THERMAL CLASS. 155°C when tested in accordance with Part 1, para. 1.6 and Part 3, para. 3.58.1.1.

GENERAL REQUIREMENTS. See Part 1.

Characteristics	Test Procedure, See Part 3, Paragraph	Requirements
1. DIMENSIONS	3.1.1.1	See Table S (MW 27-C)
2. ADHERENCE AND FLEXIBILITY	3.2.1.1	No cracks visible in the film coating
3. ELONGATION	3.3.1.1	Not less than value in Table S (MW 27-C)
4. HEAT SHOCK	3.4.1.1	No cracks visible in the film coating after conditioning at 175°C
6. SPRINGBACK	3.6.1.1	Not greater than value in Table S (MW 27-C)
7. DIELECTRIC STRENGTH	3.7.1.1	Not less than value in Table S (MW 27-C)
8. CONTINUITY	3.8.1.1	The number of discontinuities shall not exceed 25 when tested in accordance with the following: 25–30 AWG para. 3.8.1.1.1 31–44 AWG para. 3.8.1.1.1 or 3.8.1.1.2
12. SOLDERABILITY	3.12.1.1	Covered with continuous film of solder after immersion at 455°C as follows: 25–29 AWG 6 seconds 30–36 AWG 5 seconds 37–44 AWG 4 seconds
PERIODIC CONFORMANCE TESTS		
50. THERMOPLASTIC FLOW	3.50.1.1	Median not less than 200°C with heavy film coated 36 AWG
51. SOLUBILITY	3.51.1.1	A specimen of heavy film coated 36 AWG immersed in xylene shall not soften sufficiently to expose the bare conductor
52. DIELECTRIC STRENGTH AT RATED TEMPERATURE	3.52.1.1	Heavy film coated wire shall average not less than 1900 volts for 36 AWG
59. SCRAPE RESISTANCE	3.59.1.1	Lowest "grams-to-fail" load for any one of the three tests and the average of the three tests shall be not less than the values in Table S (MW 27-C)

Copyright National Electrical Manufacturers Association
Provided by IHS under license with NEMA
No reproduction or networking permitted without license from IHS
Not for Resale

9009279 0001555 318

POLYESTER (IMIDE) OVERCOATED WITH POLYAMIDE, SINGLE ENAMELLED ROUND COPPER MAGNET WIRE FOR SOLDERABLE APPLICATIONS THERMAL CLASS 155

Table S (MW 27-C)

AWG Size	Bare Wire Diameter, Inches†			Insulation†		Elongation, Minimum Percent	Scrape, Grams to Fail		Springback, Maximum Degrees per Turn	Dielectric Strength, Minimum Breakdown Volts	AWG Size
	Minimum	Nominal	Maximum	Minimum Increase in Diameter, Inches	Maximum Overall Diameter, Inches		Average	Minimum			
25	0.0177	0.0179	0.0180 *	0.0009	0.0194	28	350	300	72	2375	25
26	0.0157	0.0159	0.0160 *	0.0009	0.0173	27	335	285	76	2300	26
27	0.0141	0.0142	0.0143	0.0008	0.0156	27	310	265	50	2250	27
28	0.0125	0.0126	0.0127	0.0008	0.0140	26	295	250	55	2175	28
29	0.0112	0.0113	0.0114	0.0007	0.0126	26	275	235	61	2150	29
30	0.0099	0.0100	0.0101	0.0007	0.0112	25	260	220	66	2075	30
31	0.0088	0.0089	0.0090	0.0006	0.0100	24	...	...	..	1875	31
32	0.0079	0.0080	0.0081	0.0006	0.0091	24	...	...	..	1675	32
33	0.0070	0.0071	0.0072	0.0005	0.0081	23	...	...	..	1500	33
34	0.0062	0.0063	0.0064	0.0005	0.0072	22	...	...	..	1350	34
35	0.0055	0.0056	0.0057	0.0004	0.0064	21	...	...	..	1200	35
36	0.0049	0.0050	0.0051	0.0004	0.0058	20	...	...	..	1075	36
37	0.0044	0.0045	0.0046	0.0003	0.0052	20	...	...	..	975	37
38	0.0039	0.0040	0.0041	0.0003	0.0047	19	...	...	..	850	38
39	0.0034	0.0035	0.0036	0.0002	0.0041	18	...	...	..	775	39
40	0.0030	0.0031	0.0032	0.0002	0.0037	17	...	...	..	700	40
41	0.0027	0.0028	0.0029	0.0002	0.0033	17	...	...	..	625	41
42	0.0024	0.0025	0.0026	0.0002	0.0030	16	...	...	..	575	42
43	0.0021	0.0022	0.0023	0.0002	0.0026	15	...	...	..	500	43
44	0.0019	0.0020	0.0021	0.0001	0.0024	14	...	...	..	450	44

*This maximum bare diameter shall be permitted to be exceeded; see 1.4.9.1.
†For metric equivalents, see 1.5.
NOTE: For direct conversion of inches to millimeters, multiply inches by the factor 25.4 (exact). (This note approved as Authorized Engineering Information 3-11-1987.)

Copyright National Electrical Manufacturers Association
Provided by IHS under license with NEMA
No reproduction or networking permitted without license from IHS
Not for Resale

9009279 0001556 254

POLYESTER (IMIDE) OVERCOATED WITH POLYAMIDE, HEAVY ENAMELLED ROUND COPPER MAGNET WIRE FOR SOLDERABLE APPLICATIONS THERMAL CLASS 155

INSULATING MATERIALS. The conductor shall be coated with a dual film. The underlying coating is based on polyester (imide) resins (1.2.2.2). The superimposed coating is based on polyamide resins (1.2.2.2).

THERMAL CLASS. 155°C when tested in accordance with Part 1, para. 1.6 and Part 3, para. 3.58.1.1.

GENERAL REQUIREMENTS. See Part 1.

Characteristics	Test Procedure, See Part 3, Paragraph	Requirements
1. DIMENSIONS	3.1.1.1	See Table H (MW 27-C)
2. ADHERENCE AND FLEXIBILITY	3.2.1.1	No cracks visible in the film coating
3. ELONGATION	3.3.1.1	Not less than value in Table H (MW 27-C)
4. HEAT SHOCK	3.4.1.1	No cracks visible in the film coating after conditioning at 175°C
6. SPRINGBACK	3.6.1.1	Not greater than value in Table H (MW 27-C)
7. DIELECTRIC STRENGTH	3.7.1.1	Not less than value in Table H (MW 27-C)
8. CONTINUITY	3.8.1.1	The number of discontinuities shall not exceed 7 for 25–30 AWG or 5 for 31–44 AWG when tested in accordance with the following: 25–30 AWG para. 3.8.1.1.1 31–44 AWG para. 3.8.1.1.1 or 3.8.1.1.2
12. SOLDERABILITY	3.12.1.1	Covered with continuous film of solder after immersion at 455°C as follows: 25–29 AWG 6 seconds 30–36 AWG 5 seconds 37–44 AWG 4 seconds

PERIODIC CONFORMANCE TESTS

50. THERMOPLASTIC FLOW	3.50.1.1	Median not less than 200°C with heavy film coated 36 AWG
51. SOLUBILITY	3.51.1.1	A specimen of heavy film coated 36 AWG immersed in xylene shall not soften sufficiently to expose the bare conductor
52. DIELECTRIC STRENGTH AT RATED TEMPERATURE	3.52.1.1	Heavy film coated wire shall average not less than 1900 volts for 36 AWG
59. SCRAPE RESISTANCE	3.59.1.1	Lowest "grams-to-fail" load for any one of the three tests and the average of the three tests shall be not less than the values in Table H (MW 27-C)

Copyright National Electrical Manufacturers Association
Provided by IHS under license with NEMA
No reproduction or networking permitted without license from IHS
Not for Resale

9009279 0001557 190

POLYESTER (IMIDE) OVERCOATED WITH POLYAMIDE, HEAVY ENAMELLED ROUND COPPER MAGNET WIRE FOR SOLDERABLE APPLICATIONS THERMAL CLASS 155

Table H (MW 27-C)

AWG Size	Bare Wire Diameter, Inches†			Insulation†		Elongation, Minimum Percent	Scrape, Grams to Fail		Springback, Maximum Degrees per Turn	Dielectric Strength, Minimum Breakdown Volts	AWG Size
	Minimum	Nominal	Maximum	Minimum Increase in Diameter, Inches	Maximum Overall Diameter, Inches		Average	Minimum			
25	0.0177	0.0179	0.0180 *	0.0018	0.0203	28	635	540	72	4250	25
26	0.0157	0.0159	0.0160 *	0.0017	0.0182	27	596	505	76	4150	26
27	0.0141	0.0142	0.0143	0.0016	0.0164	27	560	475	50	4050	27
28	0.0125	0.0126	0.0127	0.0016	0.0147	26	525	450	55	3950	28
29	0.0112	0.0113	0.0114	0.0015	0.0133	26	495	420	61	3825	29
30	0.0099	0.0100	0.0101	0.0014	0.0119	25	460	395	66	3725	30
31	0.0088	0.0089	0.0090	0.0013	0.0108	24	...	...	..	3450	31
32	0.0079	0.0080	0.0081	0.0012	0.0098	24	...	...	..	3175	32
33	0.0070	0.0071	0.0072	0.0011	0.0088	23	...	...	..	2925	33
34	0.0062	0.0063	0.0064	0.0010	0.0078	22	...	...	..	2675	34
35	0.0055	0.0056	0.0057	0.0009	0.0070	21	...	...	..	2475	35
36	0.0049	0.0050	0.0051	0.0008	0.0063	20	...	...	..	2275	36
37	0.0044	0.0045	0.0046	0.0008	0.0057	20	...	...	..	2100	37
38	0.0039	0.0040	0.0041	0.0007	0.0051	19	...	...	..	1925	38
39	0.0034	0.0035	0.0036	0.0006	0.0045	18	...	...	..	1775	39
40	0.0030	0.0031	0.0032	0.0006	0.0040	17	...	...	..	1625	40
41	0.0027	0.0028	0.0029	0.0005	0.0036	17	...	...	..	1500	41
42	0.0024	0.0025	0.0026	0.0004	0.0032	16	...	...	..	1375	42
43	0.0021	0.0022	0.0023	0.0004	0.0029	15	...	...	..	1250	43
44	0.0019	0.0020	0.0021	0.0004	0.0027	14	...	...	..	1175	44

*This maximum bare diameter shall be permitted to be exceeded; see 1.4.9.1.
†For metric equivalents, see 1.5.
NOTE: For direct conversion of inches to millimeters, multiply inches by the factor 25.4 (exact). (This note approved as Authorized Engineering Information 3-11-1987.)

Copyright National Electrical Manufacturers Association
Provided by IHS under license with NEMA
No reproduction or networking permitted without license from IHS
Not for Resale

9009279 0001558 027

POLYURETHANE OVERCOATED WITH POLYAMIDE, SINGLE ENAMELLED ROUND COPPER MAGNET WIRE FOR SOLDERABLE APPLICATIONS THERMAL CLASS 130

INSULATING MATERIALS. The conductor shall be coated with a dual film. The underlying coating is based on polyurethane resins (1.2.2.2). The superimposed coating is based on polyamide resins (1.2.2.2).

THERMAL CLASS. 130°C when tested in accordance with Part 1, para. 1.6 and Part 3, para. 3.58.1.1.

GENERAL REQUIREMENTS. See Part 1.

Characteristics	Test Procedure, See Part 3, Paragraph	Requirements
1. DIMENSIONS	3.1.1.1	See Table S (MW 28-C)
2. ADHERENCE AND FLEXIBILITY	3.2.1.1	No cracks visible in the film coating
3. ELONGATION	3.3.1.1	Not less than value in Table S (MW 28-C)
4. HEAT SHOCK	3.4.1.1	No cracks visible in the film coating after conditioning at 175°C
6. SPRINGBACK	3.6.1.1	Not greater than value in Table S (MW 28-C)
7. DIELECTRIC STRENGTH	3.7.1.1	Not less than value in Table S (MW 28-C)
8. CONTINUITY	3.8.1.1	The number of discontinuities shall not exceed 25 when tested in accordance with the following: 14–30 AWG para. 3.8.1.1.1 31–44 AWG para. 3.8.1.1.1 or 3.8.1.1.2
12. SOLDERABILITY	3.12.1.1	Covered with continuous film of solder after immersion as follows: 14–19 AWG 10 seconds at 430°C 20–23 AWG 8 seconds at 430°C 24–29 AWG 6 seconds at 360°C 30–36 AWG 5 seconds at 360°C 37–44 AWG 4 seconds at 360°C
PERIODIC CONFORMANCE TESTS		
50. THERMOPLASTIC FLOW	3.50.1.1	Median not less than 170°C with heavy film coated 18 or 36 AWG
51. SOLUBILITY	3.51.1.1	A specimen of heavy film coated 18 or 36 AWG immersed in xylene shall not soften sufficiently to expose the bare conductor
52. DIELECTRIC STRENGTH AT RATED TEMPERATURE	3.52.1.1	Heavy film coated wire shall average not less than 3825 volts for 18 AWG or 1725 volts for 36 AWG
59. SCRAPE RESISTANCE	3.59.1.1	Lowest "grams-to-fail" load for any one of the three tests and the average of the three tests shall be not less than the values in Table S (MW 28-C)

Copyright National Electrical Manufacturers Association
Provided by IHS under license with NEMA
No reproduction or networking permitted without license from IHS
Not for Resale

9009279 0001559 T63

POLYURETHANE OVERCOATED WITH POLYAMIDE, SINGLE ENAMELLED ROUND COPPER MAGNET WIRE FOR SOLDERABLE APPLICATIONS THERMAL CLASS 130

Table S (MW 28-C)

AWG Size	Bare Wire Diameter, Inches†			Insulation†		Elongation, Minimum Percent	Scrape, Grams to Fail		Springback, Maximum Degrees per Turn	Dielectric Strength, Minimum Breakdown Volts	AWG Size
	Minimum	Nominal	Maximum	Minimum Increase in Diameter, Inches	Maximum Overall Diameter, Inches		Average	Minimum			
14	0.0635	0.0641	0.0644 *	0.0016	0.0666	33	840	715	42	3175	14
15	0.0565	0.0571	0.0574 *	0.0015	0.0594	33	780	665	46	3075	15
16	0.0503	0.0508	0.0511 *	0.0014	0.0531	33	735	625	50	3000	16
17	0.0448	0.0453	0.0455 *	0.0014	0.0475	32	690	585	54	2925	17
18	0.0399	0.0403	0.0405 *	0.0013	0.0424	32	645	550	58	2850	18
19	0.0355	0.0359	0.0361 *	0.0012	0.0379	31	600	510	62	2775	19
20	0.0317	0.0320	0.0322 *	0.0012	0.0339	30	560	475	66	2700	20
21	0.0282	0.0285	0.0286 *	0.0011	0.0303	30	525	445	53	2625	21
22	0.0250	0.0253	0.0254 *	0.0011	0.0270	29	490	415	58	2575	22
23	0.0224	0.0226	0.0227 *	0.0010	0.0243	29	460	390	62	2500	23
24	0.0199	0.0201	0.0202 *	0.0010	0.0217	28	430	365	67	2425	24
25	0.0177	0.0179	0.0180 *	0.0009	0.0194	28	400	340	72	2375	25
26	0.0157	0.0159	0.0160 *	0.0009	0.0173	27	380	325	76	2300	26
27	0.0141	0.0142	0.0143	0.0008	0.0156	27	355	300	50	2250	27
28	0.0125	0.0126	0.0127	0.0008	0.0140	26	335	285	55	2175	28
29	0.0112	0.0113	0.0114	0.0007	0.0126	26	310	265	61	2150	29
30	0.0099	0.0100	0.0101	0.0007	0.0112	25	295	250	66	2075	30
31	0.0088	0.0089	0.0090	0.0006	0.0100	24	...	...	..	1875	31
32	0.0079	0.0080	0.0081	0.0006	0.0091	24	...	...	..	1675	32
33	0.0070	0.0071	0.0072	0.0005	0.0081	23	...	...	..	1500	33
34	0.0062	0.0063	0.0064	0.0005	0.0072	22	...	...	..	1350	34
35	0.0055	0.0056	0.0057	0.0004	0.0064	21	...	...	..	1200	35
36	0.0049	0.0050	0.0051	0.0004	0.0058	20	...	...	..	1075	36
37	0.0044	0.0045	0.0046	0.0003	0.0052	20	...	...	..	975	37
38	0.0039	0.0040	0.0041	0.0003	0.0047	19	...	...	..	850	38
39	0.0034	0.0035	0.0036	0.0002	0.0041	18	...	...	..	775	39
40	0.0030	0.0031	0.0032	0.0002	0.0037	17	...	...	..	700	40
41	0.0027	0.0028	0.0029	0.0002	0.0033	17	...	...	..	625	41
42	0.0024	0.0025	0.0026	0.0002	0.0030	16	...	...	..	575	42
43	0.0021	0.0022	0.0023	0.0002	0.0026	15	...	...	..	500	43
44	0.0019	0.0020	0.0021	0.0001	0.0024	14	...	...	..	450	44

*This maximum bare diameter shall be permitted to be exceeded; see 1.4.9.1.
†For metric equivalents, see 1.5.
NOTE: For direct conversion of inches to millimeters, multiply inches by the factor 25.4 (exact). (This note approved as Authorized Engineering Information 3-11-1987.)

Copyright National Electrical Manufacturers Association
Provided by IHS under license with NEMA
No reproduction or networking permitted without license from IHS
Not for Resale

9009279 0001560 785

POLYURETHANE OVERCOATED WITH POLYAMIDE, HEAVY ENAMELLED ROUND COPPER MAGNET WIRE FOR SOLDERABLE APPLICATIONS THERMAL CLASS 130

INSULATING MATERIALS. The conductor shall be coated with a dual film. The underlying coating is based on polyurethane resins (1.2.2.2). The superimposed coating is based on polyamide resins (1.2.2.2).

THERMAL CLASS. 130°C when tested in accordance with Part 1, para. 1.6 and Part 3, para. 3.58.1.1.

GENERAL REQUIREMENTS. See Part 1.

Characteristics	Test Procedure, See Part 3, Paragraph	Requirements
1. DIMENSIONS	3.1.1.1	See Table H (MW 28-C)
2. ADHERENCE AND FLEXIBILITY	3.2.1.1	No cracks visible in the film coating
3. ELONGATION	3.3.1.1	Not less than value in Table H (MW 28-C)
4. HEAT SHOCK	3.4.1.1	No cracks visible in the film coating after conditioning at 175°C
6. SPRINGBACK	3.6.1.1 3.6.2.1	Not greater than value in Table H (MW 28-C) Not greater than 5°
7. DIELECTRIC STRENGTH	3.7.1.1	Not less than value in Table H (MW 28-C)
8. CONTINUITY	3.8.1.1	The number of discontinuities shall not exceed 5 for 14–24 AWG, 7 for 25–30 AWG, or 5 for 31–44 AWG, when tested in accordance with the following: 14–30 AWG para. 3.8.1.1.1 31–44 AWG para. 3.8.1.1.1 or 3.8.1.1.2
12. SOLDERABILITY	3.12.1.1	Covered with continuous film of solder after immersion as follows: 14–19 AWG 10 seconds at 430°C 20–23 AWG 8 seconds at 430°C 24–29 AWG 6 seconds at 360°C 30–36 AWG 5 seconds at 360°C 37–44 AWG 4 seconds at 360°C

PERIODIC CONFORMANCE TESTS

50. THERMOPLASTIC FLOW	3.50.1.1	Median not less than 170°C with heavy film coated 18 or 36 AWG
51. SOLUBILITY	3.51.1.1	A specimen of heavy film coated 18 or 36 AWG immersed in xylene shall not soften sufficiently to expose the bare conductor
52. DIELECTRIC STRENGTH AT RATED TEMPERATURE	3.52.1.1	Heavy film coated wire shall average not less than 3825 volts for 18 AWG or 1725 volts for 36 AWG
59. SCRAPE RESISTANCE	3.59.1.1	Lowest "grams-to-fail" load for any one of the three tests and the average of the three tests shall be not less than the values in Table H (MW 28-C)

Copyright National Electrical Manufacturers Association
Provided by IHS under license with NEMA
No reproduction or networking permitted without license from IHS
Not for Resale

9009279 0091561 611

POLYURETHANE OVERCOATED WITH POLYAMIDE, HEAVY ENAMELLED ROUND COPPER MAGNET WIRE FOR SOLDERABLE APPLICATIONS THERMAL CLASS 130

Table H (MW 28-C)

AWG Size	Bare Wire Diameter, Inches†			Insulation†		Elongation, Minimum Percent	Scrape, Grams to Fail		Springback, Maximum Degrees per Turn	Dielectric Strength, Minimum Breakdown Volts	AWG Size
	Minimum	Nominal	Maximum	Minimum Increase in Diameter, Inches	Maximum Overall Diameter, Inches		Average	Minimum			
9	0.1133	0.1144	0.1150 *	0.0032	0.1189	36	....	....	..	2875	9
10	0.1009	0.1019	0.1024 *	0.0031	0.1061	35	1490	1270	..	5575	10
11	0.0898	0.0907	0.0912 *	0.0030	0.0948	35	1490	1270	..	5400	11
12	0.0800	0.0808	0.0812 *	0.0029	0.0847	34	1490	1270	..	5225	12
13	0.0713	0.0720	0.0724 *	0.0028	0.0757	34	1490	1270	..	5050	13
14	0.0635	0.0641	0.0644 *	0.0032	0.0682	33	1490	1270	42	5700	14
15	0.0565	0.0571	0.0574 *	0.0030	0.0609	33	1400	1190	46	5550	15
16	0.0503	0.0508	0.0511 *	0.0029	0.0545	33	1310	1115	50	5400	16
17	0.0448	0.0453	0.0455 *	0.0028	0.0488	32	1230	1045	54	5275	17
18	0.0399	0.0403	0.0405 *	0.0026	0.0437	32	1150	980	58	5125	18
19	0.0355	0.0359	0.0361 *	0.0025	0.0391	31	1070	910	62	5000	19
20	0.0317	0.0320	0.0322 *	0.0023	0.0351	30	1000	850	66	4850	20
21	0.0282	0.0285	0.0286 *	0.0022	0.0314	30	940	800	53	4725	21
22	0.0250	0.0253	0.0254 *	0.0021	0.0281	29	880	750	58	4625	22
23	0.0224	0.0226	0.0227 *	0.0020	0.0253	29	820	700	62	4500	23
24	0.0199	0.0201	0.0202 *	0.0019	0.0227	28	770	655	67	4375	24
25	0.0177	0.0179	0.0180 *	0.0018	0.0203	28	720	615	72	4250	25
26	0.0157	0.0159	0.0160 *	0.0017	0.0182	27	675	575	76	4150	26
27	0.0141	0.0142	0.0143	0.0016	0.0164	27	635	540	50	4050	27
28	0.0125	0.0126	0.0127	0.0016	0.0147	26	595	510	55	3950	28
29	0.0112	0.0113	0.0114	0.0015	0.0133	26	560	480	61	3825	29
30	0.0099	0.0100	0.0101	0.0014	0.0119	25	525	450	66	3725	30
31	0.0088	0.0089	0.0090	0.0013	0.0108	24	...	...	..	3450	31
32	0.0079	0.0080	0.0081	0.0012	0.0098	24	...	...	..	3175	32
33	0.0070	0.0071	0.0072	0.0011	0.0088	23	...	...	..	2925	33
34	0.0062	0.0063	0.0064	0.0010	0.0078	22	...	...	..	2675	34
35	0.0055	0.0056	0.0057	0.0009	0.0070	21	...	...	..	2475	35
36	0.0049	0.0050	0.0051	0.0008	0.0063	20	...	...	..	2275	36
37	0.0044	0.0045	0.0046	0.0008	0.0057	20	...	...	..	2100	37
38	0.0039	0.0040	0.0041	0.0007	0.0051	19	...	...	..	1925	38
39	0.0034	0.0035	0.0036	0.0006	0.0045	18	...	...	..	1775	39
40	0.0030	0.0031	0.0032	0.0006	0.0040	17	...	...	..	1625	40
41	0.0027	0.0028	0.0029	0.0005	0.0036	17	...	...	..	1500	41
42	0.0024	0.0025	0.0026	0.0004	0.0032	16	...	...	..	1375	42
43	0.0021	0.0022	0.0023	0.0004	0.0029	15	...	...	..	1250	43
44	0.0019	0.0020	0.0021	0.0004	0.0027	14	...	...	..	1175	44

*This maximum bare diameter shall be permitted to be exceeded; see 1.4.9.1.
†For metric equivalents, see 1.5.
NOTE: For direct conversion of inches to millimeters, multiply inches by the factor 25.4 (exact). (This note approved as Authorized Engineering Information 3-11-1987.)

Copyright National Electrical Manufacturers Association
Provided by IHS under license with NEMA
No reproduction or networking permitted without license from IHS
Not for Resale

9009279 0001562 558

POLYURETHANE OVERCOATED WITH POLYAMIDE AND SELF-BONDING OVERCOAT, TYPE 1 ENAMELLED ROUND COPPER MAGNET WIRE FOR SOLDERABLE APPLICATIONS THERMAL CLASS 105

INSULATING MATERIALS. The conductor shall be coated with a multiple film. The underlying coating is based on polyurethane resins (1.2.2.2). The intermediate coating is based on polyamide resins (1.2.2.2). The superimposed outer coating is based on thermoplastic polyvinyl acetal resins (1.2.2.2).

THERMAL CLASS. 105 °C when tested in accordance with Part 1, para. 1.6 and Part 3, para. 3.58.1.1.

GENERAL REQUIREMENTS. See Part 1.

Characteristics	Test Procedure, See Part 3, Paragraph	Requirements
1. DIMENSIONS	3.1.1.1.1	See Table T1 (MW 29-C)
2. ADHERENCE AND FLEXIBILITY	3.2.1.1	No cracks visible in the film coating
3. ELONGATION	3.3.1.1	Not less than value in Table T1 (MW 29-C)
4. HEAT SHOCK	3.4.1.1	No cracks visible in the film coating after conditioning at 175 °C
6. SPRINGBACK	3.6.1.1	Not greater than value in Table T1 (MW 29-C)
7. DIELECTRIC STRENGTH	3.7.1.1	Not less than value in Table T1 (MW 29-C)
8. CONTINUITY	3.8.1.1	The number of discontinuities shall not exceed 25 when tested in accordance with the following: 14–30 AWG para. 3.8.1.1.1 31–44 AWG para. 3.8.1.1.1 or 3.8.1.1.2
12. SOLDERABILITY	3.12.1.1	Covered with continuous film of solder after immersion as follows: 14–19 AWG 10 seconds at 430 °C 20–23 AWG 8 seconds at 430 °C 24–29 AWG 6 seconds at 360 °C 30–36 AWG 5 seconds at 360 °C 37–44 AWG 4 seconds at 360 °C

PERIODIC CONFORMANCE TESTS

50. THERMOPLASTIC FLOW	3.50.1.1	Median not less than 170 °C with Type 2 film coated 18 or 36 AWG
51. SOLUBILITY	3.51.1.1	A specimen of Type 2 film coated 18 or 36 AWG immersed in xylene shall not soften sufficiently to expose the bare conductor
52. DIELECTRIC STRENGTH AT RATED TEMPERATURE	3.52.1.1	Type 2 film coated wire shall average not less than 3825 volts for 18 AWG or 1925 volts for 36 AWG
57. BOND	3.57.1.1	Specimens of 18, 26, and 36 AWG Type 2, no separation of turns.

Copyright National Electrical Manufacturers Association
Provided by IHS under license with NEMA
No reproduction or networking permitted without license from IHS
Not for Resale

9009279 0001563 494

POLYURETHANE OVERCOATED WITH POLYAMIDE AND SELF-BONDING OVERCOAT, TYPE 1 ENAMELLED ROUND COPPER MAGNET WIRE FOR SOLDERABLE APPLICATIONS THERMAL CLASS 105

Table T1 (MW 29-C)

AWG Size	Bare Wire Diameter, Inches†			Insulation†						AWG Size
				Minimum Increase in Diameter, Inches		Maximum Overall Diameter, Inches	Elongation, Minimum Percent	Springback, Maximum Degrees per Turn	Dielectric Strength, Minimum Breakdown Volts	
	Minimum	Nominal	Maximum	Film Coating	Outer Coating					
14	0.0635	0.0641	0.0644*	0.0016	0.0006	0.0682	33	42	3175	14
15	0.0565	0.0571	0.0574*	0.0015	0.0006	0.0609	33	46	3075	15
16	0.0503	0.0508	0.0511*	0.0014	0.0006	0.0545	33	50	3000	16
17	0.0448	0.0453	0.0455*	0.0014	0.0006	0.0488	32	54	2925	17
18	0.0399	0.0403	0.0405*	0.0013	0.0006	0.0437	32	58	2850	18
19	0.0355	0.0359	0.0361*	0.0012	0.0006	0.0391	31	62	2775	19
20	0.0317	0.0320	0.0322*	0.0012	0.0005	0.0351	30	66	2700	20
21	0.0282	0.0285	0.0286*	0.0011	0.0005	0.0314	30	53	2625	21
22	0.0250	0.0253	0.0254*	0.0011	0.0005	0.0281	29	58	2575	22
23	0.0224	0.0226	0.0227*	0.0010	0.0005	0.0253	29	62	2500	23
24	0.0199	0.0201	0.0202*	0.0010	0.0005	0.0227	28	67	2425	24
25	0.0177	0.0179	0.0180*	0.0009	0.0005	0.0203	28	72	2375	25
26	0.0157	0.0159	0.0160*	0.0009	0.0005	0.0182	27	76	2300	26
27	0.0141	0.0142	0.0143	0.0008	0.0005	0.0164	27	50	2250	27
28	0.0125	0.0126	0.0127	0.0008	0.0005	0.0147	26	55	2175	28
29	0.0112	0.0113	0.0114	0.0007	0.0004	0.0133	26	61	2150	29
30	0.0099	0.0100	0.0101	0.0007	0.0004	0.0119	25	66	2075	30
31	0.0088	0.0089	0.0090	0.0006	0.0004	0.0108	24	..	1875	31
32	0.0079	0.0080	0.0081	0.0006	0.0004	0.0098	24	..	1675	32
33	0.0070	0.0071	0.0072	0.0005	0.0004	0.0088	23	..	1500	33
34	0.0062	0.0063	0.0064	0.0005	0.0003	0.0078	22	..	1350	34
35	0.0055	0.0056	0.0057	0.0004	0.0003	0.0070	21	..	1200	35
36	0.0049	0.0050	0.0051	0.0004	0.0003	0.0063	20	..	1075	36
37	0.0044	0.0045	0.0046	0.0003	0.0003	0.0057	20	..	975	37
38	0.0039	0.0040	0.0041	0.0003	0.0002	0.0051	19	..	850	38
39	0.0034	0.0035	0.0036	0.0002	0.0002	0.0045	18	..	775	39
40	0.0030	0.0031	0.0032	0.0002	0.0002	0.0040	17	..	700	40
41	0.0027	0.0028	0.0029	0.0002	0.0002	0.0036	17	..	625	41
42	0.0024	0.0025	0.0026	0.0002	0.0002	0.0032	16	..	575	42
43	0.0021	0.0022	0.0023	0.0002	0.0001	0.0029	15	..	500	43
44	0.0019	0.0020	0.0021	0.0001	0.0001	0.0027	14	..	450	44

*This maximum bare diameter shall be permitted to be exceeded; see 1.4.9.1.
†For metric equivalents, see 1.5.
NOTE: For direct conversion of inches to millimeters, multiply inches by the factor 25.4 (exact). (This note approved as Authorized Engineering Information 3-11-1987.)

Copyright National Electrical Manufacturers Association
Provided by IHS under license with NEMA
No reproduction or networking permitted without license from IHS
Not for Resale

9009279 0001564 320

POLYURETHANE OVERCOATED WITH POLYAMIDE AND SELF-BONDING OVERCOAT, TYPE 2 ENAMELLED ROUND COPPER MAGNET WIRE FOR SOLDERABLE APPLICATIONS THERMAL CLASS 105

INSULATING MATERIALS. The conductor shall be coated with a multiple film. The underlying coating is based on polyurethane resins (1.2.2.2). The intermediate coating is based on polyamide resins (1.2.2.2). The superimposed outer coating is based on thermoplastic polyvinyl acetal resins (1.2.2.2).

THERMAL CLASS. 105°C when tested in accordance with Part 1, para. 1.6 and Part 3, para. 3.58.1.1.

GENERAL REQUIREMENTS. See Part 1.

Characteristics	Test Procedure, See Part 3, Paragraph	Requirements
1. DIMENSIONS	3.1.1.1.1	See Table T2 (MW 29-C)
2. ADHERENCE AND FLEXIBILITY	3.2.1.1	No cracks visible in the film coating
3. ELONGATION	3.3.1.1	Not less than value in Table T2 (MW 29-C)
4. HEAT SHOCK	3.4.1.1	No cracks visible in the film coating after conditioning at 175°C
6. SPRINGBACK	3.6.1.1	Not greater than value in Table T2 (MW 29-C)
7. DIELECTRIC STRENGTH	3.7.1.1	Not less than value in Table T2 (MW 29-C)
8. CONTINUITY	3.8.1.1	The number of discontinuities shall not exceed 5 for 14–24 AWG, 7 for 25–30 AWG, or 5 for 31–44 AWG, when tested in accordance with the following: 14–30 AWG para. 3.8.1.1.1 31–44 AWG para. 3.8.1.1.1 or 3.8.1.1.2
12. SOLDERABILITY	3.12.1.1	Covered with continuous film of solder after immersion as follows: 14–19 AWG 10 seconds at 430°C 20–23 AWG 8 seconds at 430°C 24–29 AWG 6 seconds at 360°C 30–36 AWG 5 seconds at 360°C 37–44 AWG 4 seconds at 360°C

PERIODIC CONFORMANCE TESTS

50. THERMOPLASTIC FLOW	3.50.1.1	Median not less than 170°C with Type 2 film coated 18 or 36 AWG
51. SOLUBILITY	3.51.1.1	A specimen of Type 2 film coated 18 or 36 AWG immersed in xylene shall not soften sufficiently to expose the bare conductor
52. DIELECTRIC STRENGTH AT RATED TEMPERATURE	3.52.1.1	Type 2 film coated wire shall average not less than 3825 volts for 18 AWG or 1725 volts for 36 AWG
57. BOND	3.57.1.1	Specimens of 18, 26, and 36 AWG Type 2, no separation of turns.

Copyright National Electrical Manufacturers Association
Provided by IHS under license with NEMA
No reproduction or networking permitted without license from IHS
Not for Resale

POLYURETHANE OVERCOATED WITH POLYAMIDE AND SELF-BONDING OVERCOAT, TYPE 2 ENAMELLED ROUND COPPER MAGNET WIRE FOR SOLDERABLE APPLICATIONS THERMAL CLASS 105

Table T2 (MW 29-C)

AWG Size	Bare Wire Diameter, Inches†			Insulation†						AWG Size
				Minimum Increase in Diameter, Inches		Maximum Overall Diameter, Inches	Elongation, Minimum Percent	Springback, Maximum Degrees per Turn	Dielectric Strength, Minimum Breakdown Volts	
	Minimum	Nominal	Maximum	Film Coating	Outer Coating					
14	0.0635	0.0641	0.0644*	0.0032	0.0006	0.0700	33	46	5700	14
15	0.0565	0.0571	0.0574*	0.0030	0.0006	0.0627	33	49	5550	15
16	0.0503	0.0508	0.0511*	0.0029	0.0006	0.0562	33	53	5400	16
17	0.0448	0.0453	0.0455*	0.0028	0.0006	0.0504	32	58	5275	17
18	0.0399	0.0403	0.0405*	0.0026	0.0006	0.0452	32	62	5125	18
19	0.0355	0.0359	0.0361*	0.0025	0.0006	0.0406	31	66	5000	19
20	0.0317	0.0320	0.0322*	0.0023	0.0005	0.0364	30	70	4850	20
21	0.0282	0.0285	0.0286*	0.0022	0.0005	0.0326	30	53	4725	21
22	0.0250	0.0253	0.0254*	0.0021	0.0005	0.0293	29	58	4625	22
23	0.0224	0.0226	0.0227*	0.0020	0.0005	0.0264	29	64	4500	23
24	0.0199	0.0201	0.0202*	0.0019	0.0005	0.0238	28	69	4375	24
25	0.0177	0.0179	0.0180*	0.0018	0.0005	0.0214	28	74	4250	25
26	0.0157	0.0159	0.0160*	0.0017	0.0005	0.0193	27	80	4150	26
27	0.0141	0.0142	0.0143	0.0016	0.0005	0.0173	27	55	4050	27
28	0.0125	0.0126	0.0127	0.0016	0.0005	0.0156	26	60	3950	28
29	0.0112	0.0113	0.0114	0.0015	0.0004	0.0142	26	65	3825	29
30	0.0099	0.0100	0.0101	0.0014	0.0004	0.0128	25	70	3725	30
31	0.0088	0.0089	0.0090	0.0013	0.0004	0.0115	24	..	3450	31
32	0.0079	0.0080	0.0081	0.0012	0.0004	0.0105	24	..	3175	32
33	0.0070	0.0071	0.0072	0.0011	0.0004	0.0095	23	..	2925	33
34	0.0062	0.0063	0.0064	0.0010	0.0003	0.0084	22	..	2675	34
35	0.0055	0.0056	0.0057	0.0009	0.0003	0.0076	21	..	2475	35
36	0.0049	0.0050	0.0051	0.0008	0.0003	0.0069	20	..	2275	36
37	0.0044	0.0045	0.0046	0.0008	0.0003	0.0062	20	..	2100	37
38	0.0039	0.0040	0.0041	0.0007	0.0002	0.0056	19	..	1925	38
39	0.0034	0.0035	0.0036	0.0006	0.0002	0.0050	18	..	1775	39
40	0.0030	0.0031	0.0032	0.0006	0.0002	0.0044	17	..	1625	40
41	0.0027	0.0028	0.0029	0.0005	0.0002	0.0040	17	..	1500	41
42	0.0024	0.0025	0.0026	0.0004	0.0002	0.0037	16	..	1375	42
43	0.0021	0.0022	0.0023	0.0004	0.0001	0.0033	15	..	1250	43
44	0.0019	0.0020	0.0021	0.0004	0.0001	0.0030	14	..	1175	44

*This maximum bare wire diameter shall be permitted to be exceeded; see 1.4.9.1.
†For metric equivalent, see 1.5.
NOTE: For direct conversion of inches to millimeters, multiply inches by the factor 25.4 (exact). (This note approved as Authorized Engineering Information 3-11-1987.)

Copyright National Electrical Manufacturers Association
Provided by IHS under license with NEMA
No reproduction or networking permitted without license from IHS
Not for Resale

9009279 0001566 1T3

POLYESTER (AMIDE) (IMIDE), SINGLE ENAMELLED ROUND COPPER MAGNET WIRE THERMAL CLASS 180

INSULATING MATERIALS. The coating is based on polyester (amide) (imide) resins (1.2.2.2).

THERMAL CLASS. 180°C when tested in accordance with Part 1, para. 1.6 and Part 3, para. 3.58.1.1.

GENERAL REQUIREMENTS. See Part 1.

Characteristics	Test Procedure, See Part 3, Paragraph	Requirements
1. DIMENSIONS	3.1.1.1	See Table S (MW 30-C)
2. ADHERENCE AND FLEXIBILITY	3.2.1.1	No cracks visible in the film coating
3. ELONGATION	3.3.1.1	Not less than value in Table S (MW 30-C)
4. HEAT SHOCK	3.4.1.1	No cracks visible in the film coating after conditioning at 200°C
6. SPRINGBACK	3.6.1.1	Not greater than Table S (MW 30-C)
7. DIELECTRIC STRENGTH	3.7.1.1	Not less than value in Table S (MW 30-C)
8. CONTINUITY	3.8.1.1	The number of discontinuities shall not exceed 25 when tested in accordance with the following: 14–30 AWG para. 3.8.1.1.1 31–44 AWG para. 3.8.1.1.1 or 3.8.1.1.2 45–56 AWG para. 3.8.1.1.2

PERIODIC CONFORMANCE TESTS

50. THERMOPLASTIC FLOW	3.50.1.1	Median not less than 300°C with heavy film coated 18 or 36 AWG
51. SOLUBILITY	3.51.1.1	Two specimens of heavy film coated in 18 or 36 AWG immersed in: xylene 50/50 xylene/ethyl Cellosolve shall not soften sufficiently to expose the bare conductor
52. DIELECTRIC STRENGTH AT RATED TEMPERATURE	3.52.1.1	Heavy film coated wire shall average not less than 4275 volts for 18 AWG or 1900 volts for 36 AWG
59. SCRAPE RESISTANCE	3.59.1.1	Lowest "grams-to-fail" load for any one of the three tests and the average of the three tests shall be not less than the values in Table S (MW 30-C)

Copyright National Electrical Manufacturers Association
Provided by IHS under license with NEMA
No reproduction or networking permitted without license from IHS
Not for Resale

9009279 0001567 03T

POLYESTER (AMIDE) (IMIDE), SINGLE ENAMELLED ROUND COPPER MAGNET WIRE THERMAL CLASS 180

Table S (MW 30-C)

AWG Size	Bare Wire Diameter, Inches† Minimum	Nominal	Maximum	Insulation† Minimum Increase in Diameter, Inches	Maximum Overall Diameter, Inches	Elongation, Minimum Percent	Scrape, Grams to Fail Average	Minimum	Springback, Maximum Degrees per Turn	Dielectric Strength, Minimum Breakdown Volts	AWG Size
14	0.0635	0.0641	0.0644 *	0.0016	0.0666	33	840	715	42	3525	14
15	0.0565	0.0571	0.0574 *	0.0015	0.0594	33	780	665	46	3425	15
16	0.0503	0.0508	0.0511 *	0.0014	0.0531	33	735	625	50	3325	16
17	0.0448	0.0453	0.0455 *	0.0014	0.0475	32	690	585	54	3250	17
18	0.0399	0.0403	0.0405 *	0.0013	0.0424	32	645	550	58	3175	18
19	0.0355	0.0359	0.0361 *	0.0012	0.0379	31	600	510	62	3075	19
20	0.0317	0.0320	0.0322 *	0.0012	0.0339	30	560	475	66	3000	20
21	0.0282	0.0285	0.0286 *	0.0011	0.0303	30	525	445	53	2925	21
22	0.0250	0.0253	0.0254 *	0.0011	0.0270	29	490	415	58	2850	22
23	0.0224	0.0226	0.0227 *	0.0010	0.0243	29	460	390	62	2775	23
24	0.0199	0.0201	0.0202 *	0.0010	0.0217	28	430	365	67	2700	24
25	0.0177	0.0179	0.0180 *	0.0009	0.0194	28	400	340	72	2625	25
26	0.0157	0.0159	0.0160 *	0.0009	0.0173	27	380	325	76	2550	26
27	0.0141	0.0142	0.0143	0.0008	0.0156	27	355	300	50	2500	27
28	0.0125	0.0126	0.0127	0.0008	0.0140	26	335	285	55	2425	28
29	0.0112	0.0113	0.0114	0.0007	0.0126	26	310	265	61	2375	29
30	0.0099	0.0100	0.0101	0.0007	0.0112	25	295	250	66	2300	30
31	0.0088	0.0089	0.0090	0.0006	0.0100	24	...	...	..	2075	31
32	0.0079	0.0080	0.0081	0.0006	0.0091	24	...	...	..	1850	32
33	0.0070	0.0071	0.0072	0.0005	0.0081	23	...	...	..	1675	33
34	0.0062	0.0063	0.0064	0.0005	0.0072	22	...	...	..	1500	34
35	0.0055	0.0056	0.0057	0.0004	0.0064	21	...	...	..	1325	35
36	0.0049	0.0050	0.0051	0.0004	0.0058	20	...	...	..	1200	36
37	0.0044	0.0045	0.0046	0.0003	0.0052	20	...	...	..	1075	37
38	0.0039	0.0040	0.0041	0.0003	0.0047	19	...	...	..	950	38
39	0.0034	0.0035	0.0036	0.0002	0.0041	18	...	...	..	850	39
40	0.0030	0.0031	0.0032	0.0002	0.0037	17	...	...	..	775	40
41	0.0027	0.0028	0.0029	0.0002	0.0033	17	...	...	..	700	41
42	0.0024	0.0025	0.0026	0.0002	0.0030	16	...	...	..	625	42
43	0.0021	0.0022	0.0023	0.0002	0.0026	15	...	...	..	550	43
44	0.0019	0.0020	0.0021	0.0001	0.0024	14	...	...	..	500	44
	Conductor Resistance at 20°C, Ohms per Foot †, ‡ Minimum	Nominal	Maximum				Theoretical Nominal Bare Wire Diameter, Inches †, ‡				
45	3.080	3.348	3.616	0.00010	0.00205	11	0.00176				45
46	3.870	4.207	4.544	0.00010	0.00185	10	0.00157				46
47	4.868	5.291	5.714	0.00010	0.00170	8	0.00140				47
48	6.205	6.745	7.285	0.00010	0.00150	7	0.00124				48
49	7.744	8.417	9.090	0.00010	0.00130	6	0.00111				49
50	9.734	10.58	11.43	0.00010	0.00120	5	0.00099				50
51	12.32	13.39	14.46	0.00010	0.00110	..	0.00088				51
52	15.69	17.05	18.41	0.00010	0.00100	..	0.00078				52
53	19.48	21.17	22.86	0.00005	0.00085	..	0.00070				53
54	24.82	26.98	29.14	0.00005	0.00075	..	0.00062				54
55	31.54	34.28	37.02	0.00005	0.00070	..	0.00055				55
56	39.73	43.19	46.65	0.00005	0.00065	..	0.00049				56

*This maximum bare wire diameter shall be permitted to be exceeded; see 1.4.9.1.
†For metric equivalent, see 1.5.
‡Conductor size tolerance based on resistance; see 1.4.9.2.
NOTE: For direct conversion of inches to millimeters, multiply inches by the factor 25.4 (exact). (This note approved as Authorized Engineering Information 3-11-1987.)

Copyright National Electrical Manufacturers Association
Provided by IHS under license with NEMA
No reproduction or networking permitted without license from IHS
Not for Resale

POLYESTER (AMIDE) (IMIDE), HEAVY ENAMELLED ROUND COPPER MAGNET WIRE THERMAL CLASS 180

INSULATING MATERIALS. The coating is based on polyester (amide) (imide) resins (1.2.2.2).

THERMAL CLASS. 180°C when tested in accordance with Part 1, para. 1.6 and Part 3, para. 3.58.1.1.

GENERAL REQUIREMENTS. See Part 1.

Characteristics	Test Procedure, See Part 3, Paragraph	Requirements
1. DIMENSIONS	3.1.1.1	See Table H (MW 30-C)
2. ADHERENCE AND FLEXIBILITY	3.2.1.1	No cracks visible in the film coating
3. ELONGATION	3.3.1.1	Not less than value in Table H (MW 30-C)
4. HEAT SHOCK	3.4.1.1	No cracks visible in the film coating after conditioning at 200°C
6. SPRINGBACK	3.6.1.1 3.6.2.1	Not greater than value in Table H (MW 30-C) Not greater than 5°
7. DIELECTRIC STRENGTH	3.7.1.1	Not less than value in Table H (MW 30-C)
8. CONTINUITY	3.8.1.1	The number of discontinuities shall not exceed 5 for 14–24 AWG, 7 for 25–30 AWG, 5 for 31–46 AWG, or 10 for 47–50 AWG, when tested in accordance with the following: 14–30 AWG para. 3.8.1.1.1 31–44 AWG para. 3.8.1.1.1 or 3.8.1.1.2 45–50 AWG para. 3.8.1.1.2
PERIODIC CONFORMANCE TESTS		
50. THERMOPLASTIC FLOW	3.50.1.1	Median not less than 300°C with heavy film coated 18 or 36 AWG
51. SOLUBILITY	3.51.1.1	Two specimens of heavy film coated in 18 or 36 AWG immersed in: xylene 50/50 xylene/ethyl Cellosolve shall not soften sufficiently to expose the bare conductor
52. DIELECTRIC STRENGTH AT RATED TEMPERATURE	3.52.1.1	Heavy film coated wire shall average not less than 4275 volts for 18 AWG or 1900 volts for 36 AWG
59. SCRAPE RESISTANCE	3.59.1.1	Lowest "grams-to-fail" load for any one of the three tests and the average of the three tests shall be not less than the values in Table H (MW 30-C)

Copyright National Electrical Manufacturers Association
Provided by IHS under license with NEMA
No reproduction or networking permitted without license from IHS
Not for Resale

POLYESTER (AMIDE) (IMIDE), HEAVY ENAMELLED ROUND COPPER MAGNET WIRE THERMAL CLASS 180

Table H (MW 30-C)

AWG Size	Bare Wire Diameter, Inches†			Insulation†		Elongation, Minimum Percent	Scrape, Grams to Fail		Springback, Maximum Degrees per Turn	Dielectric Strength, Minimum Breakdown Volts	AWG Size
	Minimum	Nominal	Maximum	Minimum Increase in Diameter, Inches	Maximum Overall Diameter, Inches		Average	Minimum			
4	0.2023	0.2043	0.2053 *	0.0037	0.2098	38	....	....	..	3700	4
5	0.1801	0.1819	0.1828 *	0.0036	0.1872	37	....	....	..	3600	5
6	0.1604	0.1620	0.1628 *	0.0035	0.1671	37	....	....	..	3500	6
7	0.1429	0.1443	0.1450 *	0.0034	0.1491	36	....	....	..	3400	7
8	0.1272	0.1285	0.1292 *	0.0033	0.1332	36	....	....	..	3300	8
9	0.1133	0.1144	0.1150 *	0.0032	0.1189	36	....	....	..	3200	9
10	0.1009	0.1019	0.1024 *	0.0031	0.1061	35	1490	1270	..	6200	10
11	0.0898	0.0907	0.0912 *	0.0030	0.0948	35	1490	1270	..	6000	11
12	0.0800	0.0808	0.0812 *	0.0029	0.0847	34	1490	1270	..	5800	12
13	0.0713	0.0720	0.0724 *	0.0028	0.0757	34	1490	1270	..	5600	13
14	0.0635	0.0641	0.0644 *	0.0032	0.0682	33	1490	1270	42	6325	14
15	0.0565	0.0571	0.0574 *	0.0030	0.0609	33	1400	1190	46	6175	15
16	0.0503	0.0508	0.0511 *	0.0029	0.0545	33	1310	1115	50	6000	16
17	0.0448	0.0453	0.0455 *	0.0028	0.0488	32	1230	1045	54	5850	17
18	0.0399	0.0403	0.0405 *	0.0026	0.0437	32	1150	980	58	5700	18
19	0.0355	0.0359	0.0361 *	0.0025	0.0391	31	1070	910	62	5550	19
20	0.0317	0.0320	0.0322 *	0.0023	0.0351	30	1000	850	66	5400	20
21	0.0282	0.0285	0.0286 *	0.0022	0.0314	30	940	800	53	5250	21
22	0.0250	0.0253	0.0254 *	0.0021	0.0281	29	880	750	58	5125	22
23	0.0224	0.0226	0.0227 *	0.0020	0.0253	29	820	700	62	5000	23
24	0.0199	0.0201	0.0202 *	0.0019	0.0227	28	770	655	67	4850	24
25	0.0177	0.0179	0.0180 *	0.0018	0.0203	28	720	615	72	4725	25
26	0.0157	0.0159	0.0160 *	0.0017	0.0182	27	675	575	76	4600	26
27	0.0141	0.0142	0.0143	0.0016	0.0164	27	635	540	50	4500	27
28	0.0125	0.0126	0.0127	0.0016	0.0147	26	595	510	55	4375	28
29	0.0112	0.0113	0.0114	0.0015	0.0133	26	560	480	61	4250	29
30	0.0099	0.0100	0.0101	0.0014	0.0119	25	525	450	66	4150	30
31	0.0088	0.0089	0.0090	0.0013	0.0108	24	...	...	..	3825	31
32	0.0079	0.0080	0.0081	0.0012	0.0098	24	...	...	..	3525	32
33	0.0070	0.0071	0.0072	0.0011	0.0088	23	...	...	..	3250	33
34	0.0062	0.0063	0.0064	0.0010	0.0078	22	...	...	..	2975	34
35	0.0055	0.0056	0.0057	0.0009	0.0070	21	...	...	..	2750	35
36	0.0049	0.0050	0.0051	0.0008	0.0063	20	...	...	..	2525	36
37	0.0044	0.0045	0.0046	0.0008	0.0057	20	...	...	..	2325	37
38	0.0039	0.0040	0.0041	0.0007	0.0051	19	...	...	..	2150	38
39	0.0034	0.0035	0.0036	0.0006	0.0045	18	...	...	..	1975	39
40	0.0030	0.0031	0.0032	0.0006	0.0040	17	...	...	..	1800	40
41	0.0027	0.0028	0.0029	0.0005	0.0036	17	...	...	..	1675	41
42	0.0024	0.0025	0.0026	0.0004	0.0032	16	...	...	..	1525	42
43	0.0021	0.0022	0.0023	0.0004	0.0029	15	...	...	..	1400	43
44	0.0019	0.0020	0.0021	0.0004	0.0027	14	...	...	..	1300	44
	Conductor Resistance at 20°C, Ohms per Foot †, ‡						Theoretical Nominal Bare Wire Diameter, Inches †, ‡				
	Minimum	Nominal	Maximum								
45	3.080	3.348	3.616	0.00030	0.00230	11	0.00176				45
46	3.870	4.207	4.544	0.00030	0.00210	10	0.00157				46
47	4.868	5.291	5.714	0.00030	0.00190	8	0.00140				47
48	6.205	6.745	7.285	0.00020	0.00170	7	0.00124				48
49	7.744	8.417	9.090	0.00020	0.00150	6	0.00111				49
50	9.734	10.58	11.43	0.00020	0.00140	5	0.00099				50

*This maximum bare wire diameter shall be permitted to be exceeded; see 1.4.9.1.
†For metric equivalent, see 1.5.
‡Conductor size tolerance based on resistance; see 1.4.9.2.
NOTE: For direct conversion inches to millimeters, multiply inches by the factor 25.4 (exact). (This note approved as Authorized Engineering

Copyright National Electrical Manufacturers Association
Provided by IHS under license with NEMA 3-11-1987.)
No reproduction or networking permitted without license from IHS
Not for Resale

POLYESTER (AMIDE) (IMIDE), TRIPLE ENAMELLED ROUND COPPER MAGNET WIRE THERMAL CLASS 180

INSULATING MATERIALS. The coating is based on polyester (amide) (imide) resins (1.2.2.2).

THERMAL CLASS. 180°C when tested in accordance with Part 1, para. 1.6 and Part 3, para. 3.58.1.1.

GENERAL REQUIREMENTS. See Part 1.

Characteristics	Test Procedure, See Part 3, Paragraph	Requirements
1. DIMENSIONS	3.1.1.1	See Table T (MW 30-C)
2. ADHERENCE AND FLEXIBILITY	3.2.1.1	No cracks visible in the film coating
3. ELONGATION	3.3.1.1	Not less than value in Table T (MW 30-C)
4. HEAT SHOCK	3.4.1.1	No cracks visible in the film coating after conditioning at 200°C
6. SPRINGBACK	3.6.1.1	Not greater than value in Table T (MW 30-C)
7. DIELECTRIC STRENGTH	3.7.1.1	Not less than value in Table T (MW 30-C)
8. CONTINUITY	3.8.1.1	The number of discontinuities shall not exceed 3 for 14–24 AWG or 5 for 25–30 AWG when tested in accordance with the following: 14–30 AWG para. 3.8.1.1.1
PERIODIC CONFORMANCE TESTS		
50. THERMOPLASTIC FLOW	3.50.1.1	Median not less than 300°C with heavy film coated 18 AWG
51. SOLUBILITY	3.51.1.1	Two specimens of heavy film coated in 18 AWG immersed in: xylene 50/50 xylene/ethyl Cellosolve shall not soften sufficiently to expose the bare conductor
52. DIELECTRIC STRENGTH AT RATED TEMPERATURE	3.52.1.1	Heavy film coated wire shall average not less than 4275 volts for 18 AWG
59. SCRAPE RESISTANCE	3.59.1.1	Lowest "grams-to-fail" load for any one of the three tests and the average of the three tests shall be not less than the values in Table T (MW 30-C)

Copyright National Electrical Manufacturers Association
Provided by IHS under license with NEMA
No reproduction or networking permitted without license from IHS
Not for Resale

POLYESTER (AMIDE) (IMIDE), TRIPLE ENAMELLED ROUND COPPER MAGNET WIRE THERMAL CLASS 180

Table T (MW 30-C)

AWG Size	Bare Wire Diameter, Inches†			Insulation†		Elongation,	Scrape, Grams to Fail		Springback,	Dielectric Strength,	AWG
	Minimum	Nominal	Maximum	Minimum Increase in Diameter, Inches	Maximum Overall Diameter, Inches	Minimum Percent	Average	Minimum	Maximum Degrees per Turn	Minimum Breakdown Volts	Size
14	0.0635	0.0641	0.0644 *	0.0048	0.0700	33	1735	1475	46	8450	14
15	0.0565	0.0571	0.0574 *	0.0045	0.0627	33	1620	1375	49	8225	15
16	0.0503	0.0508	0.0511 *	0.0043	0.0562	33	1525	1295	53	8000	16
17	0.0448	0.0453	0.0455 *	0.0041	0.0504	32	1425	1210	58	7800	17
18	0.0399	0.0403	0.0405 *	0.0039	0.0452	32	1335	1135	62	7600	18
19	0.0355	0.0359	0.0361 *	0.0037	0.0406	31	1255	1065	66	7400	19
20	0.0317	0.0320	0.0322 *	0.0035	0.0364	30	1180	1000	70	7200	20
21	0.0282	0.0285	0.0286 *	0.0033	0.0326	30	1115	945	53	7025	21
22	0.0250	0.0253	0.0254 *	0.0032	0.0293	29	1045	890	58	6850	22
23	0.0224	0.0226	0.0227 *	0.0030	0.0264	29	975	830	64	6675	23
24	0.0199	0.0201	0.0202 *	0.0029	0.0238	28	910	770	69	6500	24
25	0.0177	0.0179	0.0180 *	0.0027	0.0214	28	850	720	74	6325	25
26	0.0157	0.0159	0.0160 *	0.0026	0.0193	27	795	675	80	6150	26
27	0.0141	0.0142	0.0143	0.0024	0.0173	27	735	625	55	6000	27
28	0.0125	0.0126	0.0127	0.0023	0.0156	26	690	585	60	5850	28
29	0.0112	0.0113	0.0114	0.0022	0.0142	26	645	550	65	5700	29
30	0.0099	0.0100	0.0101	0.0021	0.0128	25	605	515	70	5550	30

*This maximum bare wire diameter shall be permitted to be exceeded; see 1.4.9.1.
†For metric equivalent, see 1.5.
NOTE: For direct conversion inches to millimeters, multiply inches by the factor 25.4 (exact). (This note approved as Authorized Engineering Information 3-11-1987.)

Copyright National Electrical Manufacturers Association
Provided by IHS under license with NEMA
No reproduction or networking permitted without license from IHS
Not for Resale

9009279 0001572 4T7

PAPER COVERED BARE OR FILM COATED ROUND COPPER MAGNET WIRE THERMAL CLASS 90 OR 105

INSULATING MATERIALS. The insulating material shall be rope paper or kraft paper, or both. The paper covering shall be one or more tapes wrapped firmly, closely, evenly, and continuously around the wire. The use of a suitable adhesive material shall be permitted.

THERMAL CLASS. 90°C unimpregnated or 105°C impregnated or in oil, as defined in Part 3, para. 3.58.1.2.

GENERAL REQUIREMENTS. See Part 1.

Characteristics	Test Procedure, See Part 3, Paragraph	Requirements
1. DIMENSIONS	3.1.1.2	See Table P (MW 31-C)
2. ADHERENCE AND FLEXIBILITY	3.2.1.2.1	After winding on mandrel given below, no openings sufficient to expose the bare or film coated wire

AWG Size	Mandrel Diameter
8–13	5d
14–22	4d
23–32	3d

	3.2.1.2.3	After elongation per test paragraph, no openings sufficient to expose the bare or film coated wire
3. ELONGATION	3.3.1.2.3	Not less than value in Table P (MW 31-C)
6. SPRINGBACK	3.6.2.1	Not greater than 5.5°
7. DIELECTRIC STRENGTH	3.7.1.2.2	

AWG Size	Diameter of Mandrel, inches	Minimum Breakdown Voltage Paper Covered Wire		
		Bare	Single Film	Heavy Film
8–9	None	115	...	1490
10	1.00	330	...	2980
11–15	0.75	265	1820*	3065
16–20	0.50	265	1630	2750
21–24	0.50	265	1495	2475
25–28	0.25	200	1305	2200
29–32	0.25	200	1030	1790

*Sizes 14 and 15 AWG only.

Copyright National Electrical Manufacturers Association
Provided by IHS under license with NEMA
No reproduction or networking permitted without license from IHS
Not for Resale

9009279 0001573 333

PAPER COVERED BARE OR FILM COATED ROUND COPPER MAGNET WIRE THERMAL CLASS 90 OR 105

Table P (MW 31-C)

AWG Size	Bare Wire Diameter, Inches			Elongation, Minimum Percent	Minimum Increase, Inches	Maximum Overall Diameter, Inches †			AWG Size
	Minimum	Nominal	Maximum			Bare	Single Film	Heavy Film	
8	0.1272	0.1285	0.1292*	25	0.0030	0.1342	.....	0.1382	8
9	0.1133	0.1144	0.1150*	25	0.0030	0.1200	.....	0.1239	9
10	0.1009	0.1019	0.1024*	25	0.0030	0.1074	.....	0.1111	10
11	0.0898	0.0907	0.0912*	25	0.0024	0.0952	.....	0.0988	11
12	0.0800	0.0808	0.0812*	25	0.0024	0.0852	.....	0.0887	12
13	0.0713	0.0720	0.0724*	25	0.0024	0.0764	.....	0.0797	13
14	0.0635	0.0641	0.0644*	20	0.0024	0.0684	0.0706	0.0722	14
15	0.0565	0.0571	0.0574*	20	0.0024	0.0614	0.0634	0.0649	15
16	0.0503	0.0508	0.0511*	20	0.0024	0.0551	0.0571	0.0585	16
17	0.0448	0.0453	0.0455*	20	0.0024	0.0495	0.0515	0.0528	17
18	0.0399	0.0403	0.0405*	20	0.0024	0.0445	0.0464	0.0477	18
19	0.0355	0.0359	0.0361*	20	0.0024	0.0401	0.0419	0.0431	19
20	0.0317	0.0320	0.0322*	20	0.0024	0.0362	0.0379	0.0391	20
21	0.0282	0.0285	0.0286*	20	0.0024	0.0326	0.0343	0.0354	21
22	0.0250	0.0253	0.0254*	20	0.0024	0.0294	0.0310	0.0321	22
23	0.0224	0.0226	0.0227*	10	0.0024	0.0267	0.0283	0.0293	23
24	0.0199	0.0201	0.0202*	10	0.0024	0.0242	0.0257	0.0267	24
25	0.0177	0.0179	0.0180*	10	0.0018	0.0210	0.0224	0.0233	25
26	0.0157	0.0159	0.0160*	10	0.0018	0.0190	0.0203	0.0212	26
27	0.0141	0.0142	0.0143	10	0.0018	0.0173	0.0186	0.0194	27
28	0.0125	0.0126	0.0127	10	0.0018	0.0157	0.0170	0.0177	28
29	0.0112	0.0113	0.0114	10	0.0018	0.0144	0.0156	0.0163	29
30	0.0099	0.0100	0.0101	10	0.0018	0.0131	0.0142	0.0149	30
31	0.0088	0.0089	0.0090	10	0.0018	0.0120	0.0130	0.0138	31
32	0.0079	0.0080	0.0081	10	0.0018	0.0111	0.0121	0.0128	32

*This maximum bare wire diameter shall be permitted to be exceeded; see 1.4.9.1.

† The maximum overall diameters have been calculated in accordance with the following:

AWG Size	Maximum Increase, Inches	Minimum Increase, Inches	Maximum Tape Thickness, Inches
8-12	0.014	0.004	0.0033
13-20	0.009	0.003	0.0025

NOTE: For direct conversion inches to millimeters, multiply inches by the factor 25.4 (exact). (This note approved as Authorized Engineering Information 3-11-1987.)

Copyright National Electrical Manufacturers Association
Provided by IHS under license with NEMA
No reproduction or networking permitted without license from IHS
Not for Resale

9009279 0001574 27T

DOUBLE PAPER SINGLE COTTON COVERED BARE RECTANGULAR AND SQUARE COPPER MAGNET WIRE THERMAL CLASS 90 OR 105

INSULATING MATERIALS. The insulating material shall be rope paper or kraft paper, or both. The cotton shall be of good quality and substantially free from knots, ravelings, foreign matter, and other irregularities. The paper covering shall be two thicknesses of tape applied using one or two tapes wrapped firmly, closely, evenly, and continuously around the wire. The use of a suitable adhesive material shall be permitted. The cotton covering shall be wrapped firmly, closely, evenly, and continuously around the wire and in the direction opposite to that in which the paper, was spirally wrapped.

THERMAL CLASS. 90 °C unimpregnated or 105 °C impregnated or in oil, as defined in Part 3, para. 3.58.2.2.

GENERAL REQUIREMENTS. See Part 1.

Characteristics	Test Procedure, See Part 3, Paragraph	Requirements
1. DIMENSIONS	3.1.2.2	a. Radii—see Table 1-13 b. Thickness and width tolerances—see Table 1-14 c. Dimensions and increase due to insulation—see Table PC (MW 32-C)
3. ELONGATION	3.3.2.2	Not less than 32 percent for thickness of 0.049 inch (1.25 mm) and greater or 30 percent for thicknesses less than 0.049 inch (1.25 mm).
6. SPRINGBACK	3.6.2.1	Not greater than 5.5°
11. COVERAGE	3.11.2.2	Paper and cotton covering shall not loosen sufficiently to expose the bare wire

Nominal Thickness of Bare Wire, inches	Ratio of Mandrel Diameter to Thickness of Bare Wire	
	Paper and Cotton covered	Paper covered
0.220–0.098	6	6
0.088–0.049	4	6
0.044–0.025	3	6

Copyright National Electrical Manufacturers Association
Provided by IHS under license with NEMA
No reproduction or networking permitted without license from IHS
Not for Resale

DOUBLE PAPER SINGLE COTTON COVERED BARE RECTANGULAR AND SQUARE COPPER MAGNET WIRE THERMAL CLASS 90 OR 105

Table PC (MW 32-C)

Maximum Increase in Dimensions, Inches (mm), Due to Double Paper and Single Cotton Covering

Nominal Thickness		Nominal Width																																Nominal Thickness	
Millimeters	Inches	2.00	2.12	2.24	2.37	2.50	2.65	2.80	3.00	3.15	3.35	3.55	3.75	4.00	4.25	4.50	4.75	5.00	5.30	5.60	6.00	6.30	6.70	7.10	7.50	8.00	8.50	9.00	9.50	10.0	10.6	11.2	11.8	12.5	Inches	Millimeters
		0.079	†0.083	0.088	†0.093	0.098	†0.104	0.110	†0.118	0.124	†0.132	0.140	†0.148	0.157	†0.167	0.177	†0.187	0.197	†0.209	0.220	†0.236	0.248	†0.264	0.280	†0.295	0.315	†0.335	0.354	†0.374	0.394	†0.417	0.441	†0.465	0.492		
0.63	0.025																																		0.025	0.63
0.71	0.028																																		0.028	0.71
0.80	0.031																																		0.031	0.80
0.90	0.035																																		0.035	0.90
1.00	0.039																																		0.039	1.00
1.12	0.044																																		0.044	1.12
1.25	0.049																																		0.049	1.25
1.40	0.055																																		0.055	1.40
1.60	0.063																																		0.063	1.60
1.80	0.071																																		0.071	1.80
2.00	0.079																																		0.079	2.00
2.24	0.088																																		0.088	2.24
2.50	0.098																																		0.098	2.50
2.80	0.110																																		0.110	2.80
3.15	0.124									0.020"				0.021"								0.022"				0.023"				(0.584 mm)				0.124	3.15
3.55	0.140																																		0.140	3.55
4.00	0.157																																		0.157	4.00
4.50	0.177																																		0.177	4.50
5.00	0.197																							0.023"			0.024"			(0.356 mm)				0.197	5.00
5.60	0.220																																		0.220	5.60

0.019" (0.483 mm)	0.020" (0.508 mm)	0.021" (0.533 mm)	0.022 (0.559 mm)

† R-40 Series Intermediate Numbers.

EXAMPLE—Preferred Size ..... 0.055 x 0.110 (R-20 x R-20)
Intermediate Size... 0.055 x 0.118 (R-20 x R-40)

NOTE—The minimum increase shall be 70 percent of the maximum increase given in the table, rounded off to the nearest 0.001 inch (0.025 mm).

NOTE: For direct conversion inches to millimeters, multiply inches by the factor 25.4 (exact). (This note approved as Authorized Engineering Information 3-11-1987.)

Copyright National Electrical Manufacturers Association
Provided by IHS under license with NEMA
No reproduction or networking permitted without license from IHS
Not for Resale

9009279 0001576 042

PAPER COVERED BARE RECTANGULAR AND SQUARE COPPER MAGNET WIRE THERMAL CLASS 90 OR 105

INSULATING MATERIALS. The insulating material shall be rope paper or kraft paper, or both. The paper covering shall be one or two tapes wrapped firmly, closely, evenly, and continuously around the wire. The use of a suitable adhesive material shall be permitted.

THERMAL CLASS. 90°C unimpregnated or 105°C impregnated or in oil, as defined in Part 3, para. 3.58.2.2.

GENERAL REQUIREMENTS. See Part 1.

Characteristics	Test Procedure, See Part 3, Paragraph	Requirements
1. DIMENSIONS	3.1.2.2	a. Radii—see Table 1-13 b. Thickness and width tolerances—see Table 1-14 c. Maximum increase in thickness and minimum increase in width—see Table P (MW 33-C). The minimum increase in thickness shall be not less than 70 percent of the maximum increase shown in the table, rounded off to the nearest 0.001 inch The increase in thickness for a paper covering shall be as follows: $\text{Minimum increase in thickness} = 2\left(\text{Number of paper thicknesses} - 1\right)\left(\text{Nominal tape thickness}\right)$ $\text{Maximum increase in thickness} = 2\left(\text{Number of paper thicknesses} + 1\right)\left(\text{Nominal tape thickness}\right)$
3. ELONGATION	3.3.2.2	Not less than 32 percent for thickness of 0.049 inch (1.25 mm) and greater or 30 percent for thicknesses less than 0.049 inch (1.25 mm).
6. SPRINGBACK	3.6.2.1	Not greater than 5.5°
11. COVERAGE	3.11.2.2	Paper covering shall not loosen sufficiently to expose the bare wire

Nominal Thickness of Bare Wire, inches	Ratio of Mandrel Diameter to Thickness of Bare Wire	
	Paper and Cotton covered	Paper covered
0.250–0.101	6	6
0.100–0.051	4	6
0.050–0.025	3	6

Copyright National Electrical Manufacturers Association
Provided by IHS under license with NEMA
No reproduction or networking permitted without license from IHS
Not for Resale

9009279 0001577 T89

PAPER COVERED BARE RECTANGULAR AND SQUARE COPPER MAGNET WIRE THERMAL CLASS 90 OR 105

Table P (MW 33-C)

Maximum Increase in Thickness and Minimum Increase in Width, in Inches

Nominal Thickness of Bare Wire, Inches	T and W *	Nominal Width of Bare Wire, Inches																
		0.080	0.090	0.100	0.112	0.125	0.140	0.160	0.180	0.200	0.225	0.250	0.280	0.315	0.355	0.400	0.450	0.500
0.025	T	0.023	0.023	0.023	0.023	0.024	0.024	0.024	0.024	0.024	0.024	0.025	0.025	0.025	0.025	0.025	0.025	0.025
	W	0.014	0.014	0.013	0.013	0.013	0.013	0.013	0.013	0.013	0.013	0.013	0.013	0.013	0.013	0.013	0.013	0.013
0.030	T	0.023	0.023	0.023	0.023	0.023	0.023	0.024	0.024	0.024	0.024	0.024	0.024	0.025	0.025	0.025	0.025	0.025
	W	0.015	0.014	0.014	0.014	0.013	0.013	0.013	0.013	0.013	0.013	0.013	0.013	0.013	0.013	0.013	0.013	0.013
0.035	T	0.023	0.023	0.023	0.023	0.023	0.023	0.024	0.024	0.024	0.024	0.024	0.024	0.025	0.025	0.025	0.025	0.025
	W	0.015	0.015	0.014	0.014	0.014	0.013	0.013	0.013	0.013	0.013	0.013	0.013	0.013	0.013	0.013	0.013	0.013
0.040	T	0.023	0.023	0.023	0.023	0.023	0.023	0.023	0.023	0.024	0.024	0.024	0.024	0.024	0.025	0.025	0.025	0.025
	W	0.015	0.015	0.015	0.014	0.014	0.014	0.013	0.013	0.013	0.013	0.013	0.013	0.013	0.013	0.013	0.013	0.013
0.045	T	0.023	0.023	0.023	0.023	0.023	0.023	0.023	0.023	0.023	0.024	0.024	0.024	0.024	0.024	0.024	0.025	0.025
	W	0.015	0.015	0.015	0.015	0.014	0.014	0.014	0.013	0.013	0.013	0.013	0.013	0.013	0.013	0.013	0.013	0.013
0.050	T	0.023	0.023	0.023	0.023	0.023	0.023	0.023	0.023	0.023	0.023	0.024	0.024	0.024	0.024	0.024	0.024	0.025
	W	0.015	0.015	0.015	0.015	0.015	0.014	0.014	0.014	0.013	0.013	0.013	0.013	0.013	0.013	0.013	0.013	0.013
0.055	T	0.023	0.023	0.023	0.023	0.023	0.023	0.023	0.023	0.023	0.023	0.024	0.024	0.024	0.024	0.024	0.024	0.024
	W	0.015	0.015	0.015	0.015	0.015	0.015	0.014	0.014	0.014	0.013	0.013	0.013	0.013	0.013	0.013	0.013	0.013
0.060	T	0.023	0.023	0.023	0.023	0.023	0.023	0.023	0.023	0.023	0.023	0.023	0.024	0.024	0.024	0.024	0.024	0.024
	W	0.015	0.015	0.015	0.015	0.015	0.015	0.015	0.014	0.014	0.014	0.013	0.013	0.013	0.013	0.013	0.013	0.013
0.065	T	0.018	0.022	0.023	0.023	0.023	0.023	0.023	0.023	0.023	0.023	0.023	0.023	0.024	0.024	0.024	0.024	0.024
	W	0.013	0.014	0.015	0.015	0.015	0.015	0.015	0.014	0.014	0.014	0.014	0.013	0.013	0.013	0.013	0.013	0.013
0.070	T	0.018	0.022	0.023	0.023	0.023	0.023	0.023	0.023	0.023	0.023	0.023	0.023	0.024	0.024	0.024	0.024	0.024
	W	0.013	0.014	0.015	0.015	0.015	0.015	0.015	0.015	0.014	0.014	0.014	0.013	0.013	0.013	0.013	0.013	0.013
0.075	T	0.016	0.018	0.021	0.023	0.023	0.023	0.023	0.023	0.023	0.023	0.023	0.023	0.023	0.024	0.024	0.024	0.024
	W	0.012	0.013	0.014	0.015	0.015	0.015	0.015	0.015	0.015	0.014	0.014	0.014	0.013	0.013	0.013	0.013	0.013
0.080	T	0.016	0.018	0.020	0.022	0.023	0.023	0.023	0.023	0.023	0.023	0.023	0.023	0.023	0.024	0.024	0.024	0.024
	W	0.012	0.014	0.014	0.015	0.015	0.015	0.015	0.015	0.015	0.014	0.014	0.014	0.014	0.013	0.013	0.013	0.013
0.090	T	.....	0.016	0.018	0.020	0.022	0.023	0.023	0.023	0.023	0.023	0.023	0.023	0.023	0.023	0.023	0.024	0.024
	W	.....	0.012	0.014	0.014	0.015	0.015	0.015	0.015	0.015	0.015	0.014	0.014	0.014	0.013	0.013	0.013	0.013
0.100	T	.....	.....	0.018	0.020	0.022	0.023	0.023	0.023	0.023	0.023	0.023	0.023	0.023	0.023	0.023	0.023	0.024
	W	.....	.....	0.014	0.014	0.015	0.015	0.015	0.015	0.015	0.015	0.015	0.014	0.014	0.013	0.013	0.013	0.013
0.112	T	.....	.....	.....	0.018	0.020	0.022	0.023	0.023	0.023	0.023	0.023	0.023	0.023	0.023	0.023	0.023	0.023
	W	.....	.....	.....	0.014	0.014	0.015	0.015	0.015	0.015	0.015	0.015	0.015	0.014	0.014	0.014	0.013	0.013
0.125	T	.....	.....	.....	.....	0.018	0.020	0.022	0.023	0.023	0.023	0.023	0.023	0.023	0.023	0.023	0.023	0.023
	W	.....	.....	.....	.....	0.014	0.014	0.015	0.015	0.015	0.015	0.015	0.015	0.014	0.014	0.014	0.014	0.013
0.140	T	.....	.....	.....	.....	.....	0.018	0.020	0.022	0.023	0.023	0.023	0.023	0.023	0.023	0.023	0.023	0.023
	W	.....	.....	.....	.....	.....	0.014	0.014	0.015	0.015	0.015	0.015	0.015	0.015	0.014	0.014	0.014	0.014
0.160	T	.....	.....	.....	.....	.....	.....	0.020	0.021	0.022	0.023	0.023	0.023	0.023	0.023	0.023	0.023	0.023
	W	.....	.....	.....	.....	.....	.....	0.016	0.016	0.015	0.015	0.015	0.015	0.015	0.015	0.015	0.014	0.014
0.180	T	.....	.....	.....	.....	.....	.....	.....	0.020	0.021	0.022	0.023	0.023	0.023	0.023	0.023	0.023	0.023
	W	.....	.....	.....	.....	.....	.....	.....	0.016	0.016	0.015	0.015	0.015	0.015	0.015	0.015	0.015	0.014
0.200	T	.....	.....	.....	.....	.....	.....	.....	.....	0.020	0.021	0.022	0.023	0.023	0.023	0.023	0.023	0.023
	W	.....	.....	.....	.....	.....	.....	.....	.....	0.016	0.016	0.015	0.015	0.015	0.015	0.015	0.015	0.015
0.225	T	.....	.....	.....	.....	.....	.....	.....	.....	.....	0.020	0.021	0.022	0.023	0.023	0.023	0.023	0.023
	W	.....	.....	.....	.....	.....	.....	.....	.....	.....	0.016	0.016	0.015	0.015	0.015	0.015	0.015	0.015
0.250	T	.....	.....	.....	.....	.....	.....	.....	.....	.....	.....	0.020	0.021	0.022	0.023	0.023	0.023	0.023
	W	.....	.....	.....	.....	.....	.....	.....	.....	.....	.....	0.016	0.016	0.015	0.015	0.015	0.015	0.015

*T = maximum thickness; W = minimum width.

NOTE—The maximum increase due to the paper covering shall be permitted to be exceeded provided the overall dimension of the covered wire does not exceed the sum of the maximum thickness plus the maximum increase due to the paper covering.

NOTE: For direct conversion inches to millimeters, multiply inches by the factor 25.4 (exact). (This note approved as Authorized Engineering Information 3-11-1987.)

Copyright National Electrical Manufacturers Association
Provided by IHS under license with NEMA
No reproduction or networking permitted without license from IHS
Not for Resale

9009279 0001578 915

POLYESTER (AMIDE) (IMIDE) OVERCOATED WITH POLYAMIDEIMIDE SINGLE ENAMELLED ROUND ALUMINUM MAGNET WIRE THERMAL CLASS 220

INSULATING MATERIALS. The conductor shall be coated with a dual film. The underlying coating is based on polyester (amide) (imide) resins (1.2.2.2). The superimposed coating is based on polyamideimide resins (1.2.2.2).

THERMAL CLASS. 220°C when tested in accordance with Part 1, para. 1.6 and Part 3, para. 3.58.1.1.

GENERAL REQUIREMENTS. See Part 1.

Characteristics	Test Procedure, See Part 3, Paragraph	Requirements
1. DIMENSIONS	3.1.1.1	See Table S (MW 35-A)
2. ADHERENCE AND FLEXIBILITY	3.2.1.1	No cracks visible in the film coating
3. ELONGATION	3.3.1.1	Not less than value in Table S (MW 35-A)
4. HEAT SHOCK	3.4.1.1	No cracks visible in the film coating after conditioning at 240°C
7. DIELECTRIC STRENGTH	3.7.1.1	Not less than value in Table S (MW 35-A)
8. CONTINUITY	3.8.1.1	The number of discontinuities shall not exceed 25 when tested in accordance with the following: 14–24 AWG para. 3.8.1.1.1

PERIODIC CONFORMANCE TESTS

50. THERMOPLASTIC FLOW	3.50.1.1	Median not less than 300°C with heavy film coated 18 AWG
51. SOLUBILITY	3.51.1.1	Two specimens of heavy film-coated 18 AWG immersed in: xylene; 50/50 xylene/ethyl Cellosolve; shall not soften sufficiently to expose the bare conductor
52. DIELECTRIC STRENGTH AT RATED TEMPERATURE	3.52.1.1	Heavy film coated wire shall average not less than 4275 volts for 18 AWG
59. SCRAPE RESISTANCE	3.59.1.1	Lowest "grams-to-fail" load for any one of the three tests and the average of the three tests shall be not less than the values in Table S (MW 35-A)

Copyright National Electrical Manufacturers Association
Provided by IHS under license with NEMA
No reproduction or networking permitted without license from IHS
Not for Resale

POLYESTER (AMIDE) (IMIDE) OVERCOATED WITH POLYAMIDEIMIDE, SINGLE ENAMELLED ROUND ALUMINUM MAGNET WIRE
THERMAL CLASS 220
Table S (MW 35-A)

AWG Size	Bare Wire Diameter, Inches†			Insulation†		Elongation, Minimum Percent	Scrape, Grams to Fail		Dielectric Strength, Minimum Breakdown Volts	AWG Size
	Minimum	Nominal	Maximum	Minimum Increase in Diameter, Inches	Maximum Overall Diameter, Inches		Average	Minimum		
14	0.0635	0.0641	0.0644*	0.0016	0.0666	15	505	430	3625	14
15	0.0565	0.0571	0.0574*	0.0015	0.0594	15	470	400	3425	15
16	0.0503	0.0508	0.0511*	0.0014	0.0531	15	440	375	3225	16
17	0.0448	0.0453	0.0455*	0.0014	0.0475	15	415	350	3250	17
18	0.0399	0.0403	0.0405*	0.0013	0.0424	15	390	330	3175	18
19	0.0355	0.0359	0.0361*	0.0012	0.0379	15	360	305	3075	19
20	0.0317	0.0320	0.0322*	0.0012	0.0339	14	335	285	3000	20
21	0.0282	0.0285	0.0286*	0.0011	0.0303	14	315	265	2925	21
22	0.0250	0.0253	0.0254*	0.0011	0.0270	14	295	250	2850	22
23	0.0224	0.0226	0.0227*	0.0010	0.0243	14	275	235	2775	23
24	0.0199	0.0201	0.0202*	0.0010	0.0217	13	260	220	2700	24

*This maximum bare wire diameter shall be permitted to be exceeded; see 1.4.9.1.
†For metric equivalent, see 1.5.
NOTE: For direct conversion inches to millimeters, multiply inches by the factor 25.4 (exact). (This note approved as Authorized Engineering Information 3-11-1987.)

Copyright National Electrical Manufacturers Association
Provided by IHS under license with NEMA
No reproduction or networking permitted without license from IHS
Not for Resale

9009279 0001580 573

POLYESTER (AMIDE) (IMIDE) OVERCOATED WITH POLYAMIDEIMIDE HEAVY ENAMELLED ROUND ALUMINUM MAGNET WIRE THERMAL CLASS 220

INSULATING MATERIALS. The conductor shall be coated with a dual film. The underlying coating is based on polyester (amide) (imide) resins (1.2.2.2). The superimposed coating is based on polyamideimide resins (1.2.2.2).

THERMAL CLASS. 220°C when tested in accordance with Part 1, para. 1.6 and Part 3, para. 3.58.1.1.

GENERAL REQUIREMENTS. See Part 1.

Characteristics	Test Procedure, See Part 3, Paragraph	Requirements
1. DIMENSIONS	3.1.1.1	See Table H (MW 35-A)
2. ADHERENCE AND FLEXIBILITY	3.2.1.1	No cracks visible in the film coating
3. ELONGATION	3.3.1.1	Not less than value in Table H (MW 35-A)
4. HEAT SHOCK	3.4.1.1	No cracks visible in the film coating after conditioning at 240°C
6. SPRINGBACK	3.6.2.1	Not greater than 4°
7. DIELECTRIC STRENGTH	3.7.1.1	Not less than value in Table H (MW 35-C)
8. CONTINUITY	3.8.1.1	The number of discontinuities shall not exceed 10 for 14–24 AWG, when tested in accordance with the following: 14–24 AWG para. 3.8.1.1.1
PERIODIC CONFORMANCE TESTS		
50. THERMOPLASTIC FLOW	3.50.1.1	Median not less than 300°C with heavy film coated 18 AWG
51. SOLUBILITY	3.51.1.1	Two specimens of heavy film coated 18 AWG immersed in: xylene; 50/50 xylene/ethyl Cellosolve; shall not soften sufficiently to expose the bare conductor
52. DIELECTRIC STRENGTH AT RATED TEMPERATURE	3.52.1.1	Heavy film coated wire shall average not less than 4275 volts for 18 AWG
59. SCRAPE RESISTANCE	3.59.1.1	Lowest "grams-to-fail" load for any one of the three tests and the average of the three tests shall be not less than the values in Table H (MW 35-A)

Copyright National Electrical Manufacturers Association
Provided by IHS under license with NEMA
No reproduction or networking permitted without license from IHS
Not for Resale

9009279 0001581 40T

POLYESTER (AMIDE) (IMIDE) OVERCOATED WITH POLYAMIDEIMIDE, HEAVY ENAMELLED ROUND ALUMINUM MAGNET WIRE
THERMAL CLASS 220
Table H (MW 35-A)

AWG Size	Bare Wire Diameter, Inches† Minimum	Nominal	Maximum	Insulation† Minimum Increase in Diameter, Inches	Maximum Overall Diameter, Inches	Elongation, Minimum Percent	Scrape, Grams to Fail Average	Minimum	Dielectric Strength, Minimum Breakdown Volts	AWG Size
4	0.2023	0.2043	0.2053 *	0.0037	0.2098	15	...	...	3700	4
5	0.1801	0.1819	0.1828 *	0.0036	0.1872	15	...	...	3600	5
6	0.1604	0.1620	0.1628 *	0.0035	0.1671	15	...	...	3500	6
7	0.1429	0.1443	0.1450 *	0.0034	0.1491	15	...	...	3400	7
8	0.1272	0.1285	0.1292 *	0.0033	0.1332	15	...	...	6600	8
9	0.1133	0.1144	0.1150 *	0.0032	0.1189	15	...	...	6400	9
10	0.1009	0.1019	0.1024 *	0.0031	0.1061	15	895	760	6200	10
11	0.0898	0.0907	0.0912 *	0.0030	0.0948	15	895	760	6000	11
12	0.0800	0.0808	0.0812 *	0.0029	0.0847	15	895	760	5800	12
13	0.0713	0.0720	0.0724 *	0.0028	0.0757	15	895	760	5600	13
14	0.0635	0.0641	0.0644 *	0.0032	0.0682	15	895	760	6325	14
15	0.0565	0.0571	0.0574 *	0.0030	0.0609	15	840	715	6175	15
16	0.0503	0.0508	0.0511 *	0.0029	0.0545	15	785	670	6000	16
17	0.0448	0.0453	0.0455 *	0.0028	0.0488	15	740	625	5850	17
18	0.0399	0.0403	0.0405 *	0.0026	0.0437	15	690	590	5700	18
19	0.0355	0.0359	0.0361 *	0.0025	0.0391	15	640	545	5550	19
20	0.0317	0.0320	0.0322 *	0.0023	0.0351	14	600	510	5400	20
21	0.0282	0.0285	0.0286 *	0.0022	0.0314	14	565	480	5250	21
22	0.0250	0.0253	0.0254 *	0.0021	0.0281	14	530	450	5125	22
23	0.0224	0.0226	0.0227 *	0.0020	0.0253	14	490	420	5000	23
24	0.0199	0.0201	0.0202 *	0.0019	0.0227	13	460	395	4850	24

*This maximum bare wire diameter shall be permitted to be exceeded; see 1.4.9.1.
†For metric equivalent, see 1.5.
NOTE: For direct conversion inches to millimeters, multiply inches by the factor 25.4 (exact). (This note approved as Authorized Engineering Information 3-11-1987.)

Copyright National Electrical Manufacturers Association
Provided by IHS under license with NEMA
No reproduction or networking permitted without license from IHS
Not for Resale

9009279 0001582 346

POLYESTER (AMIDE) (IMIDE) OVERCOATED WITH POLYAMIDEIMIDE, SINGLE ENAMELLED ROUND COPPER MAGNET WIRE THERMAL CLASS 200

INSULATING MATERIALS. The conductor shall be coated with a dual film. The underlying coating is based on polyester (amide) (imide) resins (1.2.2.2). The superimposed coating is based on polyamideimide resins (1.2.2.2).

THERMAL CLASS. 200°C when tested in accordance with Part 1, para. 1.6 and Part 3, para. 3.58.1.1.

GENERAL REQUIREMENTS. See Part 1.

Characteristics	Test Procedure, See Part 3, Paragraph	Requirements
1. DIMENSIONS	3.1.1.1	See Table S (MW 35-C)
2. ADHERENCE AND FLEXIBILITY	3.2.1.1	No cracks visible in the film coating
3. ELONGATION	3.3.1.1	Not less than value in Table S (MW 35-C)
4. HEAT SHOCK	3.4.1.1	No cracks visible in the film coating after conditioning at 220°C
6. SPRINGBACK	3.6.1.1	Not greater than value in Table S (MW 35-C)
7. DIELECTRIC STRENGTH	3.7.1.1	Not less than value in Table S (MW 35-C)
8. CONTINUITY	3.8.1.1	The number of discontinuities shall not exceed 25 when tested in accordance with the following: 14–30 AWG para. 3.8.1.1.1 31–44 AWG para. 3.8.1.1.1 or 3.8.1.1.2
PERIODIC CONFORMANCE TESTS		
50. THERMOPLASTIC FLOW	3.50.1.1	Median not less than 300°C with heavy film coated 18 or 36 AWG
51. SOLUBILITY	3.51.1.1	Two specimens of heavy film coated 18 or 36 AWG immersed in: xylene 50/50 xylene/ethyl Cellosolve shall not soften sufficiently to expose the bare conductor
52. DIELECTRIC STRENGTH AT RATED TEMPERATURE	3.52.1.1	Heavy film coated wire shall average not less than 4275 volts for 18 AWG or 1900 volts for 36 AWG
59. SCRAPE RESISTANCE	3.59.1.1	Lowest "grams-to-fail" load for any one of the three tests and the average of the three tests shall be not less than the values in Table S (MW 35-C)

Copyright National Electrical Manufacturers Association
Provided by IHS under license with NEMA
No reproduction or networking permitted without license from IHS
Not for Resale

POLYESTER (AMIDE) (IMIDE) OVERCOATED WITH POLYAMIDEIMIDE, SINGLE ENAMELLED ROUND COPPER MAGNET WIRE
THERMAL CLASS 200
Table S (MW 35-C)

AWG Size	Bare Wire Diameter, Inches†			Insulation†		Elongation,	Scrape, Grams to Fail		Springback,	Dielectric Strength,	AWG
	Minimum	Nominal	Maximum	Minimum Increase in Diameter, Inches	Maximum Overall Diameter, Inches	Minimum Percent	Average	Minimum	Maximum Degrees per Turn	Minimum Breakdown Volts	Size
14	0.0635	0.0641	0.0644 *	0.0016	0.0666	33	840	715	42	3525	14
15	0.0565	0.0571	0.0574 *	0.0015	0.0594	33	780	665	46	3425	15
16	0.0503	0.0508	0.0511 *	0.0014	0.0531	33	735	625	50	3325	16
17	0.0448	0.0453	0.0455 *	0.0014	0.0475	32	690	585	54	3250	17
18	0.0399	0.0403	0.0405 *	0.0013	0.0424	32	645	550	58	3175	18
19	0.0355	0.0359	0.0361 *	0.0012	0.0379	31	600	510	62	3075	19
20	0.0317	0.0320	0.0322 *	0.0012	0.0339	30	560	475	66	3000	20
21	0.0282	0.0285	0.0286 *	0.0011	0.0303	30	525	445	53	2925	21
22	0.0250	0.0253	0.0254 *	0.0011	0.0270	29	490	415	58	2850	22
23	0.0224	0.0226	0.0227 *	0.0010	0.0243	29	460	390	62	2775	23
24	0.0199	0.0201	0.0202 *	0.0010	0.0217	28	430	365	67	2700	24
25	0.0177	0.0179	0.0180 *	0.0009	0.0194	28	400	340	72	2625	25
26	0.0157	0.0159	0.0160 *	0.0009	0.0173	27	380	325	76	2550	26
27	0.0141	0.0142	0.0143	0.0008	0.0156	27	355	300	50	2500	27
28	0.0125	0.0126	0.0127	0.0008	0.0140	26	335	285	55	2425	28
29	0.0112	0.0113	0.0114	0.0007	0.0126	26	310	265	61	2375	29
30	0.0099	0.0100	0.0101	0.0007	0.0112	25	295	250	66	2300	30
31	0.0088	0.0089	0.0090	0.0006	0.0100	24	...	...	..	2075	31
32	0.0079	0.0080	0.0081	0.0006	0.0091	24	...	...	..	1850	32
33	0.0070	0.0071	0.0072	0.0005	0.0081	23	...	...	..	1675	33
34	0.0062	0.0063	0.0064	0.0005	0.0072	22	...	...	..	1500	34
35	0.0055	0.0056	0.0057	0.0004	0.0064	21	...	...	..	1325	35
36	0.0049	0.0050	0.0051	0.0004	0.0058	20	...	...	..	1200	36
37	0.0044	0.0045	0.0046	0.0003	0.0052	20	...	...	..	1075	37
38	0.0039	0.0040	0.0041	0.0003	0.0047	19	...	...	..	950	38
39	0.0034	0.0035	0.0036	0.0002	0.0041	18	...	...	..	850	39
40	0.0030	0.0031	0.0032	0.0002	0.0037	17	...	...	..	775	40
41	0.0027	0.0028	0.0029	0.0002	0.0033	17	...	...	..	700	41
42	0.0024	0.0025	0.0026	0.0002	0.0030	16	...	...	..	625	42
43	0.0021	0.0022	0.0023	0.0002	0.0026	15	...	...	..	550	43
44	0.0019	0.0020	0.0021	0.0001	0.0024	14	...	...	..	500	44

*This maximum bare wire diameter shall be permitted to be exceeded; see 1.4.9.1.
†For metric equivalent, see 1.5.
NOTE: For direct conversion inches to millimeters, multiply inches by the factor 25.4 (exact). (This note approved as Authorized Engineering Information 3-11-1987.)

Copyright National Electrical Manufacturers Association
Provided by IHS under license with NEMA
No reproduction or networking permitted without license from IHS
Not for Resale

9009279 0001584 119

POLYESTER (AMIDE) (IMIDE) OVERCOATED WITH POLYAMIDEIMIDE, HEAVY ENAMELLED ROUND COPPER MAGNET WIRE THERMAL CLASS 200

INSULATING MATERIALS. The conductor shall be coated with a dual film. The underlying coating is based on polyester (amide) (imide) resins (1.2.2.2). The superimposed coating is based on polyamideimide resins (1.2.2.2).

THERMAL CLASS. 200°C when tested in accordance with Part 1, para. 1.6 and Part 3, para. 3.58.1.1.

GENERAL REQUIREMENTS. See Part 1.

Characteristics	Test Procedure, See Part 3, Paragraph	Requirements
1. DIMENSIONS	3.1.1.1	See Table H (MW 35-C)
2. ADHERENCE AND FLEXIBILITY	3.2.1.1	No cracks visible in the film coating
3. ELONGATION	3.3.1.1	Not less than value in Table H (MW 35-C)
4. HEAT SHOCK	3.4.1.1	No cracks visible in the film coating after conditioning at 220°C
6. SPRINGBACK	3.6.1.1 3.6.2.1	Not greater than value in Table H (MW 35-C) Not greater than 5°
7. DIELECTRIC STRENGTH	3.7.1.1	Not less than value in Table H (MW 35-C)
8. CONTINUITY	3.8.1.1	The number of discontinuities shall not exceed 5 for 14–24 AWG, 7 for 25–30 AWG, or 5 for 31–44 AWG, when tested in accordance with the following: 14–30 AWG para. 3.8.1.1.1 31–44 AWG para. 3.8.1.1.1 or 3.8.1.1.2
PERIODIC CONFORMANCE TESTS		
50. THERMOPLASTIC FLOW	3.50.1.1	Median not less than 300°C with heavy film coated 18 or 36 AWG
51. SOLUBILITY	3.51.1.1	Two specimens of heavy film coated 18 or 36 AWG immersed in: xylene 50/50 xylene/ethyl Cellosolve shall not soften sufficiently to expose the bare conductor
52. DIELECTRIC STRENGTH AT RATED TEMPERATURE	3.52.1.1	Heavy film coated wire shall average not less than 4275 volts for 18 AWG or 1900 volts for 36 AWG
59. SCRAPE RESISTANCE	3.59.1.1	Lowest "grams-to-fail" load for any one of the three tests and the average of the three tests shall be not less than the values in Table H (MW 35-C)

Copyright National Electrical Manufacturers Association
Provided by IHS under license with NEMA
No reproduction or networking permitted without license from IHS
Not for Resale

POLYESTER (AMIDE) (IMIDE) OVERCOATED WITH POLYAMIDEIMIDE, HEAVY ENAMELLED ROUND COPPER MAGNET WIRE
THERMAL CLASS 200
Table H (MW 35-C)

AWG Size	Bare Wire Diameter, Inches†			Insulation†		Elongation, Minimum Percent	Scrape, Grams to Fail		Springback, Maximum Degrees per Turn	Dielectric Strength, Minimum Breakdown Volts	AWG Size
	Minimum	Nominal	Maximum	Minimum Increase in Diameter, Inches	Maximum Overall Diameter, Inches		Average	Minimum			
4	0.2023	0.2043	0.2053*	0.0037	0.2098	38	....	....	..	3700	4
5	0.1801	0.1819	0.1828*	0.0036	0.1872	37	....	....	..	3600	5
6	0.1604	0.1620	0.1628*	0.0035	0.1671	37	....	....	..	3500	6
7	0.1429	0.1443	0.1450*	0.0034	0.1491	36	....	....	..	3400	7
8	0.1272	0.1285	0.1292*	0.0033	0.1332	36	....	....	..	3300	8
9	0.1133	0.1144	0.1150*	0.0032	0.1189	36	....	....	..	3200	9
10	0.1009	0.1019	0.1024*	0.0031	0.1061	35	1490	1270	..	6200	10
11	0.0898	0.0907	0.0912*	0.0030	0.0948	35	1490	1270	..	6000	11
12	0.0800	0.0808	0.0812*	0.0029	0.0847	34	1490	1270	..	5800	12
13	0.0713	0.0720	0.0724*	0.0028	0.0757	34	1490	1270	..	5600	13
14	0.0635	0.0641	0.0644*	0.0032	0.0682	33	1490	1270	42	6325	14
15	0.0565	0.0571	0.0574*	0.0030	0.0609	33	1400	1190	46	6175	15
16	0.0503	0.0508	0.0511*	0.0029	0.0545	33	1310	1115	50	6000	16
17	0.0448	0.0453	0.0455*	0.0028	0.0488	32	1230	1045	54	5850	17
18	0.0399	0.0403	0.0405*	0.0026	0.0437	32	1150	980	58	5700	18
19	0.0355	0.0359	0.0361*	0.0025	0.0391	31	1070	910	62	5550	19
20	0.0317	0.0320	0.0322*	0.0023	0.0351	30	1000	850	66	5400	20
21	0.0282	0.0285	0.0286*	0.0022	0.0314	30	940	800	53	5250	21
22	0.0250	0.0253	0.0254*	0.0021	0.0281	29	880	750	58	5125	22
23	0.0224	0.0226	0.0227*	0.0020	0.0253	29	820	700	62	5000	23
24	0.0199	0.0201	0.0202*	0.0019	0.0227	28	770	655	67	4850	24
25	0.0177	0.0179	0.0180*	0.0018	0.0203	28	720	615	72	4725	25
26	0.0157	0.0159	0.0160*	0.0017	0.0182	27	675	575	76	4600	26
27	0.0141	0.0142	0.0143	0.0016	0.0164	27	635	540	50	4500	27
28	0.0125	0.0126	0.0127	0.0016	0.0147	26	595	510	55	4375	28
29	0.0112	0.0113	0.0114	0.0015	0.0133	26	560	480	61	4250	29
30	0.0099	0.0100	0.0101	0.0014	0.0119	25	525	450	66	4150	30
31	0.0088	0.0089	0.0090	0.0013	0.0108	24	...	...	..	3825	31
32	0.0079	0.0080	0.0081	0.0012	0.0098	24	...	...	..	3525	32
33	0.0070	0.0071	0.0072	0.0011	0.0088	23	...	...	..	3250	33
34	0.0062	0.0063	0.0064	0.0010	0.0078	22	...	...	..	2975	34
35	0.0055	0.0056	0.0057	0.0009	0.0070	21	...	...	..	2750	35
36	0.0049	0.0050	0.0051	0.0008	0.0063	20	...	...	..	2525	36
37	0.0044	0.0045	0.0046	0.0008	0.0057	20	...	...	..	2325	37
38	0.0039	0.0040	0.0041	0.0007	0.0051	19	...	...	..	2150	38
39	0.0034	0.0035	0.0036	0.0006	0.0045	18	...	...	..	1975	39
40	0.0030	0.0031	0.0032	0.0006	0.0040	17	...	...	..	1800	40
41	0.0027	0.0028	0.0029	0.0005	0.0036	17	...	...	..	1675	41
42	0.0024	0.0025	0.0026	0.0004	0.0032	16	...	...	..	1525	42
43	0.0021	0.0022	0.0023	0.0004	0.0029	15	...	...	..	1400	43
44	0.0019	0.0020	0.0021	0.0004	0.0027	14	...	...	..	1300	44

*This maximum bare wire diameter shall be permitted to be exceeded; see 1.4.9.1.
†For metric equivalent, see 1.5.
NOTE: For direct conversion inches to millimeters, multiply inches by the factor 25.4 (exact). (This note approved as Authorized Engineering Information 3-11-1987.)

Copyright National Electrical Manufacturers Association
Provided by IHS under license with NEMA
No reproduction or networking permitted without license from IHS
Not for Resale

9009279 0001586 T91

POLYESTER (AMIDE) (IMIDE) OVERCOATED WITH POLYAMIDEIMIDE, TRIPLE ENAMELLED ROUND COPPER MAGNET WIRE THERMAL CLASS 200

INSULATING MATERIALS. The conductor shall be coated with a dual film. The underlying coating is based on polyester (amide) (imide) resins (1.2.2.2). The superimposed coating is based on polyamideimide resins (1.2.2.2).

THERMAL CLASS. 200°C when tested in accordance with Part 1, para. 1.6 and Part 3, para. 3.58.1.1.

GENERAL REQUIREMENTS. See Part 1.

Characteristics	Test Procedure, See Part 3, Paragraph	Requirements
1. DIMENSIONS	3.1.1.1	See Table T (MW 35-C)
2. ADHERENCE AND FLEXIBILITY	3.2.1.1	No cracks visible in the film coating
3. ELONGATION	3.3.1.1	Not less than value in Table T (MW 35-C)
4. HEAT SHOCK	3.4.1.1	No cracks visible in the film coating after conditioning at 220°C
6. SPRINGBACK	3.6.1.1	Not greater than value in Table T (MW 35-C)
7. DIELECTRIC STRENGTH	3.7.1.1	Not less than value in Table T (MW 35-C)
8. CONTINUITY	3.8.1.1	The number of discontinuities shall not exceed 3 for 14–24 AWG and 5 for 25–30 AWG when tested in accordance with the following: 14–30 AWG para. 3.8.1.1.1
PERIODIC CONFORMANCE TESTS		
50. THERMOPLASTIC FLOW	3.50.1.1	Median not less than 300°C with heavy film coated 18 AWG
51. SOLUBILITY	3.51.1.1	Two specimens of heavy film coated 18 AWG immersed in: xylene 50/50 xylene/ethyl Cellosolve shall not soften sufficiently to expose the bare conductor
52. DIELECTRIC STRENGTH AT RATED TEMPERATURE	3.52.1.1	Heavy film coated wire shall average not less than 4275 volts for 18 AWG
59. SCRAPE RESISTANCE	3.59.1.1	Lowest "grams-to-fail" load for any one of the three tests and the average of the three tests shall be not less than the values in Table T (MW 35-C)

Copyright National Electrical Manufacturers Association
Provided by IHS under license with NEMA
No reproduction or networking permitted without license from IHS
Not for Resale

9009279 0001587 928

POLYESTER (AMIDE) (IMIDE) OVERCOATED WITH POLYAMIDEIMIDE, TRIPLE ENAMELLED ROUND COPPER MAGNET WIRE
THERMAL CLASS 200
Table T (MW 35-C)

AWG Size	Bare Wire Diameter, Inches†			Insulation†		Elongation, Minimum	Scrape, Grams to Fail		Springback, Maximum Degrees per Turn	Dielectric Strength, Minimum Breakdown	AWG Size
	Minimum	Nominal	Maximum	Minimum Increase in Diameter, Inches	Maximum Overall Diameter, Inches	Percent	Average	Minimum		Volts	
14	0.0636	0.0641	0.0644 *	0.0048	0.0700	33	1735	1475	46	8650	14
15	0.0565	0.0571	0.0574 *	0.0045	0.0627	33	1630	1375	49	8625	15
16	0.0503	0.0508	0.0511 *	0.0043	0.0562	33	1525	1295	53	8000	16
17	0.0448	0.0453	0.0455 *	0.0041	0.0504	32	1425	1210	58	7800	17
18	0.0399	0.0403	0.0405 *	0.0039	0.0452	32	1335	1135	62	7600	18
19	0.0355	0.0359	0.0361 *	0.0037	0.0406	31	1255	1065	66	7400	19
20	0.0317	0.0320	0.0322 *	0.0035	0.0364	30	1180	1000	70	7200	20
21	0.0282	0.0285	0.0286 *	0.0033	0.0326	30	1115	945	53	7025	21
22	0.0250	0.0253	0.0254 *	0.0032	0.0293	29	1045	890	58	6850	22
23	0.0224	0.0226	0.0227 *	0.0030	0.0264	29	975	830	64	6675	23
24	0.0199	0.0201	0.0202 *	0.0029	0.0238	28	910	770	69	6500	24
25	0.0177	0.0179	0.0180 *	0.0027	0.0214	28	850	720	74	6325	25
26	0.0157	0.0159	0.0160 *	0.0026	0.0193	27	795	675	80	6150	26
27	0.0141	0.0142	0.0143	0.0024	0.0173	27	735	625	85	6000	27
28	0.0125	0.0126	0.0127	0.0023	0.0156	26	690	585	90	5850	28
29	0.0112	0.0113	0.0114	0.0022	0.0142	26	645	550	95	5700	29
30	0.0099	0.0100	0.0101	0.0021	0.0128	25	605	515	70	5550	30

*This maximum bare wire diameter shall be permitted to be exceeded; see 1.4.9.1.
†For metric equivalent, see 1.5.
NOTE: For direct conversion inches to millimeters, multiply inches by the factor 25.4 (exact). (This note approved as Authorized Engineering Information 3-11-1987.)

Copyright National Electrical Manufacturers Association
Provided by IHS under license with NEMA
No reproduction or networking permitted without license from IHS
Not for Resale

9009279 0001588 864

POLYESTER (AMIDE) (IMIDE) OVERCOATED WITH POLYAMIDEIMIDE, HEAVY AND QUADRUPLE ENAMELLED RECTANGULAR AND SQUARE ALUMINUM MAGNET WIRE THERMAL CLASS 220

INSULATING MATERIALS. The conductor shall be coated with a dual film. The underlying coating is based on polyester (amide) (imide) resins (1.2.2.2). The superimposed coating is based on polyamideimide resins (1.2.2.2).

THERMAL CLASS. 220°C when tested in accordance with Part 1, para. 1.6 and Part 3, para. 3.58.2.1.

GENERAL REQUIREMENTS. See Part 1.

Characteristics	Test Procedure, See Part 3, Paragraph	Requirements
1. DIMENSIONS	3.1.2.1	Rectangular Wire: a. Dimensions and radii—see Table 1-13 b. Thickness and width tolerances—see Table 1-14 c. Increase in thickness and width due to film coating—see Table TW (MW 36-A) Square Wire: Bare wire dimensions and tolerances, radii, and increase in dimensions due to film coating—see Table SQ (MW 36-A)
2. ADHERENCE AND FLEXIBILITY	3.2.2.1	No cracks visible in the film coating
3. ELONGATION	3.3.2.1	Not less than 15 percent
4. HEAT SHOCK	3.4.2.1	No cracks visible in the film coating after 10 percent elongation followed by conditioning at 240°C
6. SPRINGBACK	3.6.2.1	Not greater than 4°
7. DIELECTRIC STRENGTH	3.7.2.1	

Film Coating	Minimum Breakdown Voltage: Any Three of Four Electrodes	Minimum Breakdown Voltage: Fourth Electrode
Heavy	1500	500
Quadruple	2500	900

PERIODIC CONFORMANCE TESTS

50. THERMOPLASTIC FLOW	3.50.2.1	Median not less than 300°C with heavy film coated 18 AWG
51. SOLUBILITY	3.51.2.1	Two specimens immersed in: xylene 50/50 xylene/ethyl Cellosolve shall not soften sufficiently to expose the bare conductor
52. DIELECTRIC STRENGTH AT RATED TEMPERATURE	3.52.2.1	Heavy film coated wire shall average not less than 4275 volts for 18 AWG

Copyright National Electrical Manufacturers Association
Provided by IHS under license with NEMA
No reproduction or networking permitted without license from IHS
Not for Resale

POLYESTER (AMIDE) (IMIDE) OVERCOATED WITH POLYAMIDEIMIDE, HEAVY AND QUADRUPLE ENAMELLED RECTANGULAR AND SQUARE ALUMINUM MAGNET WIRE
THERMAL CLASS 220

Table TW (MW 36-A) Rectangular

Increase in Thickness and Width Due to Film Coating

Build	Increase in Width				Increase in Thickness			
	Minimum		Maximum *		Minimum		Maximum *	
	inches	mm	inches	mm	inches	mm	inches	mm
Heavy	0.0025	0.064	0.0045	0.114	0.0030	0.076	0.0050	0.127
Quadruple	0.0040	0.102	0.0060	0.152	0.0050	0.127	0.0070	0.178

*The maximum increase shall be permitted to be exceeded provided the maximum overall dimension of the coated wire does not exceed the sum of the maximum dimension of the bare wire plus the maximum increase due to the coating.

NOTE: For direct conversion inches to millimeters, multiply inches by the factor 25.4 (exact). (This note approved as Authorized Engineering Information 3-11-1987.)

Table SQ (MW 36-A) Square

Dimensions of Square Wire—1 Through 14 AWG

Square AWG Size	Bare Wire Dimensions						Nominal Radii †		Heavy				Quadruple			
	Minimum		Nominal		Maximum				Minimum Increase in Dimension		Maximum Overall Dimension		Minimum Increase in Dimension		Maximum Overall Dimension	
	inches	mm	inches	mm	inches	mm	inches	mm	inches	mm	inches	mm	inches	mm	inches	mm
1	0.2864	7.275	0.2893	7.348	0.2922	7.422	0.040	1.02	0.0030	0.076	0.2972	7.549	0.0050	0.127	0.2992	7.600
2	0.2550	6.477	0.2576	6.543	0.2602	6.609	0.040	1.02	0.0030	0.076	0.2652	6.736	0.0050	0.127	0.2672	6.787
3	0.2271	5.768	0.2294	5.827	0.2317	5.885	0.040	1.02	0.0030	0.076	0.2367	6.012	0.0050	0.127	0.2387	6.063
4	0.2023	5.138	0.2043	5.189	0.2063	5.240	0.040	1.02	0.0030	0.076	0.2113	5.367	0.0050	0.127	0.2133	5.418
5	0.1801	4.575	0.1819	4.620	0.1837	4.666	0.040	1.02	0.0030	0.076	0.1887	4.793	0.0050	0.127	0.1907	4.844
6	0.1604	4.074	0.1620	4.115	0.1636	4.155	0.032	0.81	0.0030	0.076	0.1686	4.282	0.0050	0.127	0.1706	4.333
7	0.1429	3.630	0.1443	3.665	0.1457	3.701	0.032	0.81	0.0030	0.076	0.1507	3.828	0.0050	0.127	0.1527	3.879
8	0.1272	3.231	0.1285	3.264	0.1298	3.297	0.032	0.81	0.0030	0.076	0.1348	3.424	0.0050	0.127	0.1368	3.475
9	0.1133	2.878	0.1144	2.906	0.1155	2.934	0.026	0.66	0.0030	0.076	0.1205	3.061	0.0050	0.127	0.1225	3.112
10	0.1009	2.563	0.1019	2.588	0.1029	2.614	0.026	0.66	0.0030	0.076	0.1079	2.741	0.0050	0.127	0.1099	2.791
11	0.0897	2.278	0.0907	2.304	0.0917	2.329	0.020	0.51	0.0030	0.076	0.0967	2.456	0.0050	0.127	0.0987	2.507
12	0.0798	2.027	0.0808	2.052	0.0818	2.078	0.020	0.51	0.0030	0.076	0.0868	2.205	0.0050	0.127	0.0888	2.256
13	0.0710	1.803	0.0720	1.829	0.0730	1.854	0.016	0.41	0.0030	0.076	0.0780	1.981	0.0050	0.127	0.0800	2.032
14	0.0631	1.603	0.0641	1.628	0.0651	1.654	0.016	0.41	0.0030	0.076	0.0701	1.781	0.0050	0.127	0.0721	1.831

† Radii tolerance is plus or minus 25 percent.

NOTE: For direct conversion inches to millimeters, multiply inches by the factor 25.4 (exact). (This note approved as Authorized Engineering Information 3-11-1987.)

Copyright National Electrical Manufacturers Association
Provided by IHS under license with NEMA
No reproduction or networking permitted without license from IHS
Not for Resale

POLYESTER (AMIDE) (IMIDE) OVERCOATED WITH POLYAMIDEIMIDE, HEAVY AND QUADRUPLE ENAMELLED RECTANGULAR AND SQUARE COPPER MAGNET WIRE THERMAL CLASS 200

INSULATING MATERIALS. The conductor shall be coated with a dual film. The underlying coating is based on polyester (amide) (imide) resins (1.2.2.2). The superimposed coating is based on polyamideimide resins (1.2.2.2).

THERMAL CLASS. 200°C when tested in accordance with Part 1, para. 1.6 and Part 3, para. 3.58.2.1.

GENERAL REQUIREMENTS. See Part 1.

Characteristics	Test Procedure, See Part 3, Paragraph	Requirements
1. DIMENSIONS	3.1.2.1	Rectangular Wire: a. Dimensions and radii—see Table 1-13 b. Thickness and width tolerances—see Table 1-14 c. Increase in thickness and width due to film coating—see Table TW (MW 36-C) Square Wire: Bare wire dimensions and tolerances, radii, and increase in dimensions due to film coating—see Table SQ (MW 36-C)
2. ADHERENCE AND FLEXIBILITY	3.2.2.1	No cracks visible in the film coating
3. ELONGATION	3.3.2.1	Not less than 32 percent
4. HEAT SHOCK	3.4.2.1	No cracks visible in the film coating after 15 percent elongation followed by conditioning at 220°C.
6. SPRINGBACK	3.6.2.1	Not greater than 5°
7. DIELECTRIC STRENGTH	3.7.2.1	Minimum Breakdown Voltage Film Coating / Any Three of Four Electrodes / Fourth Electrode Heavy 1500 500 Quadruple 2500 900 Applicable to heavy coated sizes with a thickness less than 0.049 inch (1.25 mm) or a width greater than 0.492 inch (12.5 mm) or a width to thickness ratio greater than 5:1, and all quadruple. Other heavy coated sizes require BEND test, see Paragraph 10
10. BEND	3.10.2.1	Heavy coated sizes with a thickness of 0.049 inch (1.25 mm) or greater, a width of 0.492 inch (12.5 mm) or less, and a width to thickness ratio of not more than 5:1, after bending shall have a dielectric strength not less than in Paragraph 7 above

PERIODIC CONFORMANCE TESTS

50. THERMOPLASTIC FLOW	3.50.2.1	Median not less than 300°C with heavy film coated 18 AWG
51. SOLUBILITY	3.51.2.1	Two specimens immersed in: xylene 50/50 xylene/ethyl Cellosolve shall not soften sufficiently to expose the bare conductor
52. DIELECTRIC STRENGTH AT RATED TEMPERATURE	3.52.2.1	Heavy film coated wire shall average not less than 4275 volts for 18 AWG

Copyright National Electrical Manufacturers Association
Provided by IHS under license with NEMA
No reproduction or networking permitted without license from IHS
Not for Resale

9009279 0001591 359

POLYESTER (AMIDE) (IMIDE) OVERCOATED WITH POLYAMIDEIMIDE, HEAVY AND QUADRUPLE ENAMELLED RECTANGULAR AND SQUARE COPPER MAGNET WIRE
THERMAL CLASS 200
Table TW (MW 36-C) Rectangular

Increase in Thickness and Width Due to Film Coating

Build	Increase in Width				Increase in Thickness			
	Minimum		Maximum *		Minimum		Maximum *	
	inches	mm	inches	mm	inches	mm	inches	mm
Heavy	0.0025	0.064	0.0045	0.114	0.0030	0.076	0.0050	0.127
Quadruple	0.0040	0.102	0.0060	0.152	0.0050	0.127	0.0070	0.178

*The maximum increase shall be permitted to be exceeded provided the maximum overall dimension of the coated wire does not exceed the sum of the maximum dimension of the bare wire plus the maximum increase due to the coating.

NOTE: For direct conversion inches to millimeters, multiply inches by the factor 25.4 (exact). (This note approved as Authorized Engineering Information 3-11-1987.)

Table SQ (MW 36-C) Square

Dimensions of Square Wire—1 Through 14 AWG

Square AWG Size	Bare Wire Dimensions						Nominal Radii †		Heavy				Quadruple			
	Minimum		Nominal		Maximum				Minimum Increase in Dimension		Maximum Overall Dimension		Minimum Increase in Dimension		Maximum Overall Dimension	
	inches	mm	inches	mm	inches	mm	inches	mm	inches	mm	inches	mm	inches	mm	inches	mm
1	0.2864	7.275	0.2893	7.348	0.2922	7.422	0.040	1.02	0.0030	0.076	0.2972	7.549	0.0050	0.127	0.2992	7.600
2	0.2550	6.477	0.2576	6.543	0.2602	6.609	0.040	1.02	0.0030	0.076	0.2652	6.736	0.0050	0.127	0.2672	6.787
3	0.2271	5.768	0.2294	5.827	0.2317	5.885	0.040	1.02	0.0030	0.076	0.2367	6.012	0.0050	0.127	0.2387	6.063
4	0.2023	5.138	0.2043	5.189	0.2063	5.240	0.040	1.02	0.0030	0.076	0.2113	5.367	0.0050	0.127	0.2133	5.418
5	0.1801	4.575	0.1819	4.620	0.1837	4.666	0.040	1.02	0.0030	0.076	0.1887	4.793	0.0050	0.127	0.1907	4.844
6	0.1604	4.074	0.1620	4.115	0.1636	4.155	0.032	0.81	0.0030	0.076	0.1686	4.282	0.0050	0.127	0.1706	4.333
7	0.1429	3.630	0.1443	3.665	0.1457	3.701	0.032	0.81	0.0030	0.076	0.1507	3.828	0.0050	0.127	0.1527	3.879
8	0.1272	3.231	0.1285	3.264	0.1298	3.297	0.032	0.81	0.0030	0.076	0.1348	3.424	0.0050	0.127	0.1368	3.475
9	0.1133	2.878	0.1144	2.906	0.1155	2.934	0.026	0.66	0.0030	0.076	0.1205	3.061	0.0050	0.127	0.1225	3.112
10	0.1009	2.563	0.1019	2.588	0.1029	2.614	0.026	0.66	0.0030	0.076	0.1079	2.741	0.0050	0.127	0.1099	2.791
11	0.0897	2.278	0.0907	2.304	0.0917	2.329	0.020	0.51	0.0030	0.076	0.0967	2.456	0.0050	0.127	0.0987	2.507
12	0.0798	2.027	0.0808	2.052	0.0818	2.078	0.020	0.51	0.0030	0.076	0.0868	2.205	0.0050	0.127	0.0888	2.256
13	0.0710	1.803	0.0720	1.829	0.0730	1.854	0.016	0.41	0.0030	0.076	0.0780	1.981	0.0050	0.127	0.0800	2.032
14	0.0631	1.603	0.0641	1.628	0.0651	1.654	0.016	0.41	0.0030	0.076	0.0701	1.781	0.0050	0.127	0.0721	1.831

† Radii tolerance is plus or minus 25 percent.

NOTE: For direct conversion inches to millimeters, multiply inches by the factor 25.4 (exact). (This note approved as Authorized Engineering Information 3-11-1987.)

Copyright National Electrical Manufacturers Association
Provided by IHS under license with NEMA
No reproduction or networking permitted without license from IHS
Not for Resale

9009279 0001592 295

SINGLE GLASS FIBER COVERED, BARE OR FILM COATED, ROUND COPPER MAGNET WIRE THERMAL CLASS 155

INSULATING MATERIALS. The glass fiber shall be electrical grade continuous filament glass yarn. If any underlying film coating is used, it shall have at least a Class 130 rating. The glass fiber covering shall be wrapped firmly, closely, evenly, and continuously around the wire. The glass fiber covering shall be treated with an insulating varnish to provide a tough outer finish.

THERMAL CLASS. 155°C as defined in Part 3, para. 3.58.1.2.

GENERAL REQUIREMENTS. See Part 1.

Characteristics	Test Procedure, See Part 3, Paragraph	Requirements
1. DIMENSIONS	3.1.1.2	See Table S (MW 41-C)
2. ADHERENCE AND FLEXIBILITY	3.2.1.2	Covering shall not open sufficiently to expose the bare or film-coated wire after bending on mandrel sizes as follows:

AWG Size	Mandrel Diameter
0 and larger	15d
1 to 30	10d

3. ELONGATION — 3.3.1.2.1 — Not less than the following:

AWG Size	Minimum Elongation Percent: With Glass Fiber Covering	Minimum Elongation Percent: Glass Fiber Covering Removed
4/0–0	35.0	35.0
1–8	30.0	30.0
9–15	20.0	30.0
16–21	15.0	25.0
22–28	...	20.0
29 and 30	...	15.0

6. SPRINGBACK — 3.6.2.1 — Not greater than 5° for Glass Fiber Covered Bare
Not greater than 5.5° for Glass Fiber Covered Film Coated

7. DIELECTRIC STRENGTH — 3.7.1.2.1 — Not less than the following:

AWG Size	Diameter of Mandrel: inches	Diameter of Mandrel: mm	Minimum Breakdown, Volts*
4/0–9	...	...	170
10–23	1.00	25.4	360
24–30	0.25	6.3	225

*For glass fiber covered wire having an underlying film coating, add the minimum breakdown voltage given in Part 2 for the film-coated wire

Copyright National Electrical Manufacturers Association
Provided by IHS under license with NEMA
No reproduction or networking permitted without license from IHS
Not for Resale

SINGLE GLASS FIBER COVERED, BARE OR FILM COATED, ROUND COPPER MAGNET WIRE THERMAL CLASS 155

Table S (MW 41-C)

AWG Size	Bare Wire Diameter, Inches†			Minimum Increase in Glass Fiber Covering, Inches†	Maximum Overall Diameter, Inches†			AWG Size
	Minimum	Nominal	Maximum		Bare	Single Film	Heavy Film	
4/0	0.4554	0.4600	0.4646	0.0045	0.4716	.....	.....	4/0
3/0	0.4055	0.4096	0.4137	0.0045	0.4207	.....	.....	3/0
2/0	0.3612	0.3648	0.3684	0.0045	0.3754	.....	.....	2/0
1/0	0.3217	0.3249	0.3281	0.0045	0.3351	.....	.....	1/0
1	0.2864	0.2893	0.2922	0.0045	0.2992	.....	.....	1
2	0.2550	0.2576	0.2602	0.0045	0.2672	.....	.....	2
3	0.2271	0.2294	0.2317	0.0045	0.2387	.....	.....	3
4	0.2023	0.2043	0.2053*	0.0045	0.2133	.....	0.2168	4
5	0.1801	0.1819	0.1828*	0.0045	0.1907	.....	0.1942	5
6	0.1604	0.1620	0.1628*	0.0045	0.1706	.....	0.1741	6
7	0.1429	0.1443	0.1450*	0.0045	0.1527	.....	0.1561	7
8	0.1272	0.1285	0.1292*	0.0045	0.1368	.....	0.1402	8
9	0.1133	0.1144	0.1150*	0.0045	0.1225	.....	0.1259	9
10	0.1009	0.1019	0.1024*	0.0040	0.1089	.....	0.1121	10
11	0.0898	0.0907	0.0912*	0.0040	0.0976	.....	0.1008	11
12	0.0800	0.0808	0.0812*	0.0040	0.0876	.....	0.0907	12
13	0.0713	0.0720	0.0724*	0.0040	0.0787	.....	0.0817	13
14	0.0635	0.0641	0.0644*	0.0040	0.0707	0.0726	0.0742	14
15	0.0565	0.0571	0.0574*	0.0040	0.0637	0.0654	0.0669	15
16	0.0503	0.0508	0.0511*	0.0040	0.0573	0.0591	0.0605	16
17	0.0448	0.0453	0.0455*	0.0040	0.0518	0.0535	0.0548	17
18	0.0399	0.0403	0.0405*	0.0040	0.0467	0.0484	0.0497	18
19	0.0355	0.0359	0.0361*	0.0040	0.0423	0.0439	0.0451	19
20	0.0317	0.0320	0.0322*	0.0040	0.0383	0.0399	0.0411	20
21	0.0282	0.0285	0.0286*	0.0040	0.0348	0.0363	0.0374	21
22	0.0250	0.0253	0.0254*	0.0040	0.0316	0.0330	0.0341	22
23	0.0224	0.0226	0.0227*	0.0040	0.0288	0.0303	0.0313	23
24	0.0199	0.0201	0.0202*	0.0025	0.0243	0.0257	0.0267	24
25	0.0177	0.0179	0.0180*	0.0025	0.0221	0.0234	0.0243	25
26	0.0157	0.0159	0.0160*	0.0025	0.0201	0.0213	0.0222	26
27	0.0141	0.0142	0.0143	0.0025	0.0183	0.0196	0.0204	27
28	0.0125	0.0126	0.0127	0.0025	0.0167	0.0180	0.0187	28
29	0.0112	0.0113	0.0114	0.0025	0.0154	0.0166	0.0173	29
30	0.0099	0.0100	0.0101	0.0025	0.0141	0.0152	0.0159	30

*This maximum bare wire diameter shall be permitted to be exceeded; see 1.4.9.1.
†For metric equivalent, see 1.5.
NOTE: For direct conversion inches to millimeters, multiply inches by the factor 25.4 (exact). (This note approved as Authorized Engineering Information 3-11-1987.)

Copyright National Electrical Manufacturers Association
Provided by IHS under license with NEMA
No reproduction or networking permitted without license from IHS Not for Resale

9009279 0001594 068

DOUBLE GLASS FIBER COVERED, BARE OR FILM COATED, ROUND COPPER MAGNET WIRE THERMAL CLASS 155

INSULATING MATERIALS. The glass fiber shall be electrical grade continuous filament glass yarn. If any underlying film coating is used, it shall have at least a Class 130 rating. The glass fiber covering shall be wrapped firmly, closely, evenly, and continuously around the wire. Adjacent layers shall be wound in opposite directions. The glass fiber covering shall be treated with an insulating varnish to provide a tough outer finish.

THERMAL CLASS. 155°C as defined in Part 3, para. 3.58.1.2.

GENERAL REQUIREMENTS. See Part 1.

Characteristics	Test Procedure, See Part 3, Paragraph	Requirements
1. DIMENSIONS	3.1.1.2	See Table D (MW 41-C)
2. ADHERENCE AND FLEXIBILITY	3.2.1.2	Covering shall not open sufficiently to expose the bare or film-coated wire after bending on mandrel sizes as follows:

AWG Size	Mandrel Diameter
0 and larger	15d
1 to 30	10d

3. ELONGATION	3.3.1.2.1	Not less than the following:

AWG Size	Minimum Elongation Percent With Glass Fiber Covering	Minimum Elongation Percent Glass Fiber Covering Removed
4/0–0	35.0	35.0
1–8	30.0	30.0
9–15	20.0	30.0
16–21	15.0	25.0
22–28	...	20.0
29 and 30	...	15.0

6. SPRINGBACK	3.6.2.1	Not greater than 5° for Glass Fiber Covered Bare Not greater than 5.5° for Glass Fiber Covered Film Coated
7. DIELECTRIC STRENGTH	3.7.1.2.1	Not less than the following:

AWG Size	Diameter of Mandrel inches	Diameter of Mandrel mm	Minimum Breakdown, Volts*
4/0–9	...	...	265
10–23	1.00	25.4	540
24–30	0.25	6.3	400

*For glass fiber covered wire having an underlying film coating, add the minimum breakdown voltage given in Part 2 for the film-coated wire

Copyright National Electrical Manufacturers Association
Provided by IHS under license with NEMA
No reproduction or networking permitted without license from IHS
Not for Resale

DOUBLE GLASS FIBER COVERED, BARE OR FILM COATED, ROUND COPPER MAGNET WIRE THERMAL CLASS 155

Table D (MW 41-C)

AWG Size	Bare Wire Diameter, Inches†			Minimum Increase in Glass Fiber Covering, Inches†	Maximum Overall Diameter, Inches†			AWG Size
	Minimum	Nominal	Maximum		Bare	Single Film	Heavy Film	
4/0	0.4554	0.4600	0.4646	0.0070	0.4756	.....	.....	4/0
3/0	0.4055	0.4096	0.4137	0.0070	0.4247	.....	.....	3/0
2/0	0.3612	0.3648	0.3684	0.0070	0.3794	.....	.....	2/0
1/0	0.3217	0.3249	0.3281	0.0070	0.3391	.....	.....	1/0
1	0.2864	0.2893	0.2922	0.0070	0.3032	.....	.....	1
2	0.2550	0.2576	0.2602	0.0070	0.2712	.....	.....	2
3	0.2271	0.2294	0.2317	0.0070	0.2427	.....	.....	3
4	0.2023	0.2043	0.2053*	0.0070	0.2173	.....	0.2210	4
5	0.1801	0.1819	0.1828*	0.0070	0.1947	.....	0.1982	5
6	0.1604	0.1620	0.1628*	0.0070	0.1746	.....	0.1781	6
7	0.1429	0.1443	0.1450*	0.0070	0.1567	.....	0.1601	7
8	0.1272	0.1285	0.1292*	0.0070	0.1408	.....	0.1442	8
9	0.1133	0.1144	0.1150*	0.0070	0.1265	.....	0.1299	9
10	0.1009	0.1019	0.1024*	0.0060	0.1119	.....	0.1151	10
11	0.0898	0.0907	0.0912*	0.0060	0.1006	.....	0.1038	11
12	0.0800	0.0808	0.0812*	0.0060	0.0906	.....	0.0937	12
13	0.0713	0.0720	0.0724*	0.0060	0.0817	.....	0.0847	13
14	0.0635	0.0641	0.0644*	0.0060	0.0737	0.0726	0.0772	14
15	0.0565	0.0571	0.0574*	0.0060	0.0667	0.0654	0.0699	15
16	0.0503	0.0508	0.0511*	0.0060	0.0603	0.0621	0.0635	16
17	0.0448	0.0453	0.0455*	0.0060	0.0548	0.0565	0.0578	17
18	0.0399	0.0403	0.0405*	0.0060	0.0497	0.0514	0.0527	18
19	0.0355	0.0359	0.0361*	0.0060	0.0453	0.0469	0.0481	19
20	0.0317	0.0320	0.0322*	0.0060	0.0413	0.0429	0.0441	20
21	0.0282	0.0285	0.0286*	0.0060	0.0378	0.0393	0.0404	21
22	0.0250	0.0253	0.0254*	0.0060	0.0346	0.0360	0.0371	22
23	0.0224	0.0226	0.0227*	0.0060	0.0318	0.0333	0.0343	23
24	0.0199	0.0201	0.0202*	0.0045	0.0263	0.0277	0.0287	24
25	0.0177	0.0179	0.0180*	0.0045	0.0241	0.0254	0.0263	25
26	0.0157	0.0159	0.0160*	0.0045	0.0221	0.0233	0.0242	26
27	0.0141	0.0142	0.0143	0.0045	0.0203	0.0216	0.0224	27
28	0.0125	0.0126	0.0127	0.0045	0.0187	0.0200	0.0207	28
29	0.0112	0.0113	0.0114	0.0045	0.0174	0.0186	0.0193	29
30	0.0099	0.0100	0.0101	0.0045	0.0161	0.0172	0.0179	30

*This maximum bare wire diameter shall be permitted to be exceeded; see 1.4.9.1.
†For metric equivalent, see 1.5.
NOTE: For direct conversion inches to millimeters, multiply inches by the factor 25.4 (exact). (This note approved as Authorized Engineering Information 3-11-1987.)

Copyright National Electrical Manufacturers Association
Provided by IHS under license with NEMA
No reproduction or networking permitted without license from IHS Not for Resale

9009279 0001596 930

SINGLE GLASS FIBER COVERED HEAVY FILM COATED RECTANGULAR AND SQUARE COPPER MAGNET WIRE THERMAL CLASS 155

INSULATING MATERIALS. The glass fiber shall be electrical grade continuous filament glass yarn. If any underlying film coating is used, it shall have at least a Class 130 rating. The glass fiber covering shall be wrapped firmly, closely, evenly, and continuously around the wire. The glass fiber covering shall be treated with an insulating varnish to provide a tough outer finish.

THERMAL CLASS. 155°C as defined in Part 3, para. 3.58.2.2.

GENERAL REQUIREMENTS. See Part 1.

Characteristics	Test Procedure, See Part 3, Paragraph	Requirements
1. DIMENSIONS	3.1.2.2	Rectangular Wire: a. Dimensions and radii—see Table 1-13 b. Thickness and width tolerances—see Table 1-14 c. Dimensions and increase in thickness—see Table STW (MW 42-C) Square Wire: a. Radii—see Table SSQ (MW 42-C) b. Bare size, increase due to insulation—see Table SSQ (MW 42-C)
2. ADHERENCE AND FLEXIBILITY	3.2.2.2.2	No cracks shall be visible in the film coating after 20 percent elongation. Examine with normal vision and without removal of glass fiber covering
3. ELONGATION	3.3.2.2	Not less than 32 percent for thickness of 0.049 inch (1.25 mm) and greater or 30 percent for thicknesses less than 0.049 inch (1.25 mm).
6. SPRINGBACK	3.6.2.1	Not greater than 5.5°
7. DIELECTRIC STRENGTH	3.7.2.2	Not less than 90 volts/mil (3543 v/mm) of the minimum thickness of the glass fiber covering on one side [one-half the minimum calculated from Table STW or SSQ (MW 42-C)] plus the minimum breakdown given in Part 2 for the film-coated wire

Copyright National Electrical Manufacturers Association
Provided by IHS under license with NEMA
No reproduction or networking permitted without license from IHS
Not for Resale

SINGLE GLASS FIBER COVERED HEAVY FILM COATED RECTANGULAR AND SQUARE COPPER MAGNET WIRE THERMAL CLASS 155

Table STW (MW 42-C)

Maximum Increase in Thickness, Inches (mm), Due to Single Glass Fiber Covering, Heavy Film Coating and Treating Varnish, Rectangular Wire

Nominal Thickness		Nominal Width																													Nominal Thickness	
Millimeters	Inches	2.00	2.12	2.24	2.37	2.50	2.65	2.80	3.00	3.15	3.35	3.55	3.75	4.00	4.25	4.50	4.75	5.00	5.30	5.60	6.00	6.30	6.70	7.10	7.50	8.00	8.50	9.00	9.50	10.0	10.6	11.2	11.8	12.5	Inches	Millimeters
		0.079	† 0.083	0.088	† 0.093	0.098	† 0.104	0.110	† 0.118	0.124	† 0.132	0.140	† 0.148	0.157	† 0.167	0.177	† 0.187	0.197	† 0.209	0.220	† 0.236	0.248	† 0.264	0.280	† 0.295	0.315	† 0.335	0.354	† 0.374	0.394	† 0.417	0.441	† 0.465	0.492		
0.63	0.025																																		0.025	0.63
0.71	0.028																																		0.028	0.71
0.80	0.031																																		0.031	0.80
0.90	0.035																																		0.035	0.90
1.00	0.039	0.012" (0.305 mm)						0.013" (0.330 mm)								0.014" (0.356 mm)					0.015" (0.381 mm)				0.016" (0.406 mm)									0.039	1.00
1.12	0.044																																		0.044	1.12
1.25	0.049																																		0.049	1.25
1.40	0.055																																		0.055	1.40
1.60	0.063																																		0.063	1.60
1.80	0.071																																		0.071	1.80
2.00	0.079																																		0.079	2.00
2.24	0.088																																		0.088	2.24
2.50	0.098																																		0.098	2.50
2.80	0.110																																		0.110	2.80
3.15	0.124																																		0.124	3.15
3.55	0.140																																		0.140	3.55
4.00	0.157																																		0.157	4.00
4.50	0.177																																		0.177	4.50
5.00	0.197																																		0.197	5.00
5.60	0.220																																		0.220	5.60

† R-40 Series Intermediate Numbers.

EXAMPLE—Preferred Size ..... 0.055 x 0.110 (R-20 x R-20)
Intermediate Size ... 0.055 x 0.118 (R-20 x R-40)

NOTE I—The maximum increase due to the glass fiber covering shall be permitted to be exceeded provided the overall dimension of the covered wire does not exceed the sum of the maximum thickness of the bare wire plus the maximum increase due to the heavy film coating and single glass fiber covering.

NOTE II—The increase in thickness due to the heavy film coating shall be in accordance with the applicable section for film coated wire in Part 2.

NOTE III—The increase in thickness due to the single glass fiber covering shall be determined by subtracting 0.005 inch (0.127 mm) (maximum thickness of film coating) from the maximum increase in thickness given in the table.

NOTE IV—The increase in width due to the glass fiber covering shall be equal to or less than the maximum increase in thickness given in the table. Note I applies to the increase in width as well as the increase in thickness.

NOTE V—Because it is impossible to accurately separate the glass fiber covering from the film coating, the total minimum increase in the thickness of the film coated glass fiber covered rectangular wire shall be the sum of the minimum increase due to the film coating (as shown for film coated wire in Part 2) and the minimum increase due to the glass fiber covering. The total minimum increase shall be not less than 70 percent of the maximum increase given in the table above, rounded to the nearest 0.001 inch (0.025 mm).

NOTE VI—For direct conversion of inches to millimeters, multiply inches by the factor 25.4 (exact). (This note approved as Authorized Engineering Information 3-11-1987.)

Copyright National Electrical Manufacturers Association
Provided by IHS under license with NEMA
No reproduction or networking permitted without license from IHS
Not for Resale

9009279 0001598 703

SINGLE GLASS FIBER COVERED HEAVY FILM COATED RECTANGULAR AND SQUARE COPPER MAGNET WIRE

THERMAL CLASS 155

Table SSQ (MW 42-C)

Minimum Increase and Maximum Overall Dimensions Due to Single Glass Fiber Covering, Heavy Film Coating and Treating Varnish, Square Wire

Square AWG Size	Bare Wire Dimension						Nominal Radii *		Insulation				Square AWG Size
	Minimum		Nominal		Maximum				Minimum Increase in Dimension		Maximum Overall Dimension		
	inches	mm	inches	mm	inches	mm	inches	mm	inches	mm	inches	mm	
0	0.3219	8.176	0.3249	8.252	0.3279	8.329	0.040	1.02	0.011	0.279	0.344	8.738	0
1	0.2864	7.275	0.2893	7.348	0.2922	7.422	0.040	1.02	0.010	0.254	0.307	7.798	1
2	0.2550	6.477	0.2576	6.543	0.2602	6.609	0.040	1.02	0.010	0.254	0.275	6.985	2
3	0.2271	5.768	0.2294	5.827	0.2317	5.885	0.040	1.02	0.010	0.254	0.247	6.274	3
4	0.2023	5.138	0.2043	5.189	0.2063	5.240	0.040	1.02	0.010	0.254	0.221	5.613	4
5	0.1801	4.575	0.1819	4.620	0.1837	4.666	0.040	1.02	0.009	0.229	0.198	5.029	5
6	0.1604	4.074	0.1620	4.115	0.1636	4.155	0.032	0.81	0.009	0.229	0.178	4.521	6
7	0.1429	3.630	0.1443	3.665	0.1457	3.701	0.032	0.81	0.009	0.229	0.159	4.039	7
8	0.1272	3.231	0.1285	3.264	0.1298	3.297	0.032	0.81	0.009	0.229	0.143	3.632	8
9	0.1133	2.878	0.1144	2.906	0.1155	2.934	0.026	0.66	0.009	0.229	0.129	3.277	9
10	0.1009	2.563	0.1019	2.588	0.1029	2.614	0.026	0.66	0.009	0.229	0.116	2.946	10
11	0.0897	2.278	0.0907	2.304	0.0917	2.329	0.020	0.51	0.008	0.203	0.104	2.642	11
12	0.0798	2.027	0.0808	2.052	0.0818	2.078	0.020	0.51	0.008	0.203	0.094	2.388	12
13	0.0710	1.803	0.0720	1.829	0.0730	1.854	0.016	0.41	0.008	0.203	0.085	2.159	13
14	0.0631	1.603	0.0641	1.628	0.0651	1.654	0.016	0.41	0.008	0.203	0.077	1.956	14

* Radii tolerance is plus or minus 25 percent.

NOTE: For direct conversion inches to millimeters, multiply inches by the factor 25.4 (exact). (This note approved as Authorized Engineering Information 3-11-1987.)

Copyright National Electrical Manufacturers Association
Provided by IHS under license with NEMA
No reproduction or networking permitted without license from IHS
Not for Resale

9009279 0001599 64T

DOUBLE GLASS FIBER COVERED BARE OR HEAVY FILM COATED RECTANGULAR AND SQUARE COPPER MAGNET WIRE THERMAL CLASS 155

INSULATING MATERIALS. The glass fiber shall be electrical grade continuous filament glass yarn. If an underlying film coating is used, it shall have at least a Class 130 rating. The glass fiber covering shall be wrapped firmly, closely, evenly, and continuously around the wire. Adjacent layers shall be wound in opposite directions. The glass fiber covering shall be treated with an insulating varnish to provide a tough outer finish.

THERMAL CLASS. 155°C as defined in Part 3, para. 3.58.2.2.

GENERAL REQUIREMENTS. See Part 1.

Characteristics	Test Procedure, See Part 3, Paragraph	Requirements
1. DIMENSIONS	3.1.2.2	Rectangular Wire: a. Radii—see Table 1-13 b. Thickness and width tolerances—see Table 1-14 c. Dimensions and increase in thickness—see Table DTW (MW 42-C) Square Wire: a. Radii—see Table DSQ (MW 42-C) b. Bare size, increase due to insulation—see Table DSQ (MW 42-C)
2. ADHERENCE AND FLEXIBILITY	3.2.2.2.1	Not less than 75 volts/mil (2950 v/mm) of minimum thickness of the glass-fiber covering on one side [one half the minimum calculated from Table DTW (MW 42-C) for rectangular or Table DSQ (MW 42-C) for square]
	3.2.2.2.2	No cracks shall be visible in the film coating after 20 percent elongation. Examine with normal vision and without removal of glass fiber covering
3. ELONGATION	3.3.2.2	Not less than 32 percent for thickness of 0.049 inch (1.25 mm) and greater or 30 percent for thicknesses less than 0.049 inch (1.25 mm).
6. SPRINGBACK	3.6.2.1	Not greater 5° for Glass Fiber Covered Bare Not greater than 5.5° for Glass Fiber Covered Heavy Film Coated
7. DIELECTRIC STRENGTH	3.7.2.2	Not less than 90 volts/mil (3543 v/mm) of the minimum thickness of the glass fiber covering on one side[one-half the minimum calculated from Table DTW or DSQ (MW 42-C)] plus the minimum breakdown given in the applicable product section for the film-coated wire

Copyright National Electrical Manufacturers Association
Provided by IHS under license with NEMA
No reproduction or networking permitted without license from IHS
Not for Resale

9009279 0001600 191

DOUBLE GLASS FIBER COVERED BARE OR HEAVY FILM COATED RECTANGULAR AND SQUARE COPPER MAGNET WIRE THERMAL CLASS 155

Table DTW (MW 42-C)

Maximum Increase in Thickness, Inches (mm), Due to Double Glass Fiber Covering and Treating Varnish, Rectangular Wire

Nominal Thickness		Nominal Width																												Nominal Thickness	
Millimeters	Inches	2.00	2.12	2.24	2.37	2.50	2.65	2.80	3.00	3.15	3.35	3.55	3.75	4.00	4.25	4.50	4.75	5.00	5.30	5.60	6.00	6.30	6.70	7.10	7.50	8.00	8.50	9.00	9.50	10.0	10.6	11.2	11.8	12.5	Inches	Millimeters
		0.079	†0.083	0.088	†0.093	0.098	†0.104	0.110	†0.118	0.124	†0.132	0.140	†0.148	0.157	†0.167	0.177	†0.187	0.197	†0.209	0.220	†0.236	0.248	†0.264	0.280	†0.295	0.315	†0.335	0.354	†0.374	0.394	†0.417	0.441	†0.465	0.492		
0.63	0.025																																		0.025	0.63
0.71	0.028																																		0.028	0.71
0.80	0.031																																		0.031	0.80
0.90	0.035																																		0.035	0.90
1.00	0.039	0.012" (0.305 mm)						0.013" (0.330 mm)				0.014" (0.356 mm)					0.015" (0.381 mm)				0.016" (0.406 mm)							0.018" (0.457 mm)							0.039	1.00
1.12	0.044																																		0.044	1.12
1.25	0.049																																		0.049	1.25
1.40	0.055																																		0.055	1.40
1.60	0.063																																		0.063	1.60
1.80	0.071																																		0.071	1.80
2.00	0.079																																		0.079	2.00
2.24	0.088																																		0.088	2.24
2.50	0.098																																		0.098	2.50
2.80	0.110																																		0.110	2.80
3.15	0.124																																		0.124	3.15
3.55	0.140																								0.017" (0.432 mm)							0.019" (0.483 mm)			0.140	3.55
4.00	0.157																																		0.157	4.00
4.50	0.177																																		0.177	4.50
5.00	0.197																																		0.197	5.00
5.60	0.220																																		0.220	5.60

† R-40 Series Intermediate Numbers.

EXAMPLE—Preferred Size ..... 0.055 x 0.110 (R-20 x R-20)
Intermediate Size ... 0.055 x 0.118 (R-20 x R-40)

NOTE I—The maximum increase due to the glass fiber covering shall be permitted to be exceeded provided the overall dimension of the covered wire does not exceed the sum of the maximum thickness of the bare or film coated wire plus the maximum increase due to the glass fiber covering.

NOTE II—The increase in thickness due to the heavy film coating, if any, shall be in accordance with the applicable section for film coated wire in Part 2.

NOTE III—The minimum increase due to the glass fiber covering shall be not less than 70 percent of the maximum shown in the table above, rounded to the nearest 0.001 inch (0.025 mm).

NOTE IV—The increase in width due to the glass fiber covering shall be equal to or less than the maximum increase in thickness given in the table. Note I applies to the increase in width as well as the increase in thickness.

NOTE V—Because it is impossible to accurately separate the glass fiber covering from the film coating, if any, the total minimum increase in the thickness of a film coated glass fiber covered rectangular wire shall be the sum of the minimum increase due to the film coating (as shown for film-coated wire in Part 2) and the minimum increase due to the glass fiber covering. The total minimum increase shall be not less than 70 percent of the maximum increase given in the table above, rounded to the nearest 0.001 inch (0.025 mm).

NOTE VI—For direct conversion of inches to millimeters, multiply inches by the factor 25.4 (exact). (This note approved as Authorized Engineering Information 3-11-1987.)

Copyright National Electrical Manufacturers Association
Provided by IHS under license with NEMA
No reproduction or networking permitted without license from IHS
Not for Resale

9009279 0001601 028

DOUBLE GLASS FIBER COVERED BARE OR HEAVY FILM COATED RECTANGULAR AND SQUARE COPPER MAGNET WIRE
THERMAL CLASS 155
Table DSQ (MW 42-C)

Minimum Increase and Maximum Overall Dimensions, Due to Double Glass Fiber Covering and Treating Varnish, Square Wire

Square AWG Size	Bare Wire Dimensions						Nominal Radii *		Bare Double-glass-covered Wire				Heavy-film-coated Double-glass-covered Wire			
	Minimum		Nominal		Maximum				Minimum Increase in Dimension		Maximum Overall Dimension		Minimum Increase in Dimension		Maximum Overall Dimension	
	inches	mm	inches	mm	inches	mm	inches	mm	inches	mm	inches	mm	inches	mm	inches	mm
0	0.3219	8.176	0.3249	8.252	0.3279	8.329	0.040	1.02	0.013	0.330	0.346	8.788	0.016	0.406	0.351	8.915
1	0.2864	7.275	0.2893	7.348	0.2922	7.422	0.040	1.02	0.012	0.305	0.309	7.849	0.015	0.381	0.314	7.976
2	0.2550	6.477	0.2576	6.543	0.2602	6.609	0.040	1.02	0.012	0.305	0.277	7.036	0.015	0.381	0.282	7.163
3	0.2271	5.768	0.2294	5.827	0.2317	5.885	0.040	1.02	0.011	0.279	0.248	6.299	0.014	0.356	0.253	6.426
4	0.2023	5.138	0.2043	5.189	0.2063	5.240	0.040	1.02	0.011	0.279	0.222	5.639	0.014	0.356	0.227	5.766
5	0.1801	4.575	0.1819	4.620	0.1837	4.666	0.040	1.02	0.011	0.279	0.199	5.055	0.014	0.356	0.204	5.182
6	0.1604	4.074	0.1620	4.115	0.1636	4.155	0.032	0.81	0.011	0.279	0.179	4.547	0.014	0.356	0.184	4.674
7	0.1429	3.630	0.1443	3.665	0.1457	3.701	0.032	0.81	0.010	0.254	0.160	4.064	0.013	0.330	0.165	4.191
8	0.1272	3.231	0.1285	3.264	0.1298	3.297	0.032	0.81	0.010	0.254	0.144	3.658	0.013	0.330	0.149	3.785
9	0.1133	2.878	0.1144	2.906	0.1155	2.934	0.026	0.66	0.009	0.229	0.129	3.277	0.012	0.305	0.134	3.404
10	0.1009	2.563	0.1019	2.588	0.1029	2.614	0.026	0.66	0.009	0.229	0.116	2.946	0.012	0.305	0.121	3.073
11	0.0897	2.278	0.0907	2.304	0.0917	2.329	0.020	0.51	0.008	0.203	0.104	2.642	0.011	0.279	0.109	2.769
12	0.0798	2.027	0.0808	2.052	0.0818	2.078	0.020	0.51	0.008	0.203	0.094	2.388	0.011	0.279	0.099	2.515
13	0.0710	1.803	0.0720	1.829	0.0730	1.854	0.016	0.41	0.008	0.203	0.085	2.159	0.011	0.279	0.090	2.286
14	0.0631	1.603	0.0641	1.628	0.0651	1.654	0.016	0.41	0.008	0.203	0.077	1.956	0.011	0.279	0.082	2.083

* Radii tolerance is plus or minus 25 percent.

NOTE: For direct conversion inches to millimeters, multiply inches by the factor 25.4 (exact). (This note approved as Authorized Engineering Information 3-11-1987.)

Copyright National Electrical Manufacturers Association
Provided by IHS under license with NEMA
No reproduction or networking permitted without license from IHS
Not for Resale

9009279 0001602 T64

SINGLE GLASS FIBER COVERED, SILICONE TREATED, HEAVY FILM COATED RECTANGULAR AND SQUARE COPPER MAGNET WIRE THERMAL CLASS 200

INSULATING MATERIALS. The glass fiber shall be electrical grade continuous filament glass yarn. Underlying film coating shall have at least a Class 180 rating. The glass fiber covering shall be wrapped firmly, closely, evenly, and continuously around the wire. The glass fiber covering shall be treated with a modified silicone insulating varnish or silicone compound to provide a tough outer finish. If a tracer is used, one or more ends of glass yarn shall be black or green, and the dye or pigment used for this purpose shall be sufficiently stable so as to retain its color identity after the silicone treatment and subsequent baking.

THERMAL CLASS. 200°C as defined in Part 3, para. 3.58.2.2.

GENERAL REQUIREMENTS. See Part 1.

Characteristics	Test Procedure, See Part 3, Paragraph	Requirements
1. DIMENSIONS	3.1.2.2	Rectangular Wire: a. Radii—see Table 1-13 b. Thickness and width tolerances—see Table 1-14 c. Dimensions and increase in thickness—see Table STW (MW 43-C) Square Wire: a. Radii—see Table SSQ (MW 43-C) b. Bare size, increase due to insulation—see Table SSQ (MW 43-C)
2. ADHERENCE AND FLEXIBILITY	3.2.2.2.2	No cracks shall be visible in the film coating after 20 percent elongation. Examine with normal vision and without removal of glass fiber covering
3. ELONGATION	3.3.2.2	Not less than 32 percent for thickness of 0.049 inch (1.25 mm) and greater or 30 percent for thicknesses less than 0.049 inch (1.25 mm).
6. SPRINGBACK	3.6.2.1	Not greater than 5.5°
7. DIELECTRIC STRENGTH	3.7.2.2	Not less than 90 volts/mil (3543 v/mm) of the minimum thickness of the glass fiber covering on one side [one-half the minimum calculated from Table STW or SSQ (MW 43-C)] plus the minimum breakdown given in Part 2 for the film-coated wire

Copyright National Electrical Manufacturers Association
Provided by IHS under license with NEMA
No reproduction or networking permitted without license from IHS
Not for Resale

SINGLE GLASS FIBER COVERED, SILICONE TREATED, HEAVY FILM COATED RECTANGULAR AND SQUARE COPPER MAGNET WIRE THERMAL CLASS 200

Table STW (MW 43-C)

Maximum Increase in Thickness, Inches (mm), Due to Single Glass Fiber Covering, Heavy Film Coating and Silicone Varnish, Rectangular Wire

Nominal Thickness		Nominal Width																													Nominal Thickness	
Millimeters	Inches	2.00	2.12	2.24	2.37	2.50	2.65	2.80	3.00	3.15	3.35	3.55	3.75	4.00	4.25	4.50	4.75	5.00	5.30	5.60	6.00	6.30	6.70	7.10	7.50	8.00	8.50	9.00	9.50	10.0	10.6	11.2	11.8	12.5	Inches	Millimeters
		0.079	†0.083	0.088	†0.093	0.098	†0.104	0.110	†0.118	0.124	†0.132	0.140	†0.148	0.157	†0.167	0.177	†0.187	0.197	†0.209	0.220	†0.236	0.248	†0.264	0.280	†0.295	0.315	†0.335	0.354	†0.374	0.394	†0.417	0.441	†0.465	0.492		
0.63	0.025																																		0.025	0.63
0.71	0.028																																		0.028	0.71
0.80	0.031																																		0.031	0.80
0.90	0.035																																		0.035	0.90
1.00	0.039	0.012" (0.305 mm)							0.013" (0.330 mm)								0.014" (0.356 mm)			0.015" (0.381 mm)				0.016" (0.406 mm)											0.039	1.00
1.12	0.044																																		0.044	1.12
1.25	0.049																																		0.049	1.25
1.40	0.055																																		0.055	1.40
1.60	0.063																																		0.063	1.60
1.80	0.071																																		0.071	1.80
2.00	0.079																																		0.079	2.00
2.24	0.088																																		0.088	2.24
2.50	0.098																																		0.098	2.50
2.80	0.110																																		0.110	2.80
3.15	0.124																																		0.124	3.15
3.55	0.140																																		0.140	3.55
4.00	0.157																																		0.157	4.00
4.50	0.177																																		0.177	4.50
5.00	0.197																																		0.197	5.00
5.60	0.220																																		0.220	5.60

† R-40 Series Intermediate Numbers.

EXAMPLE—Preferred Size ..... 0.055 x 0.110 (R-20 x R-20)
Intermediate Size ... 0.055 x 0.118 (R-20 x R-40)

NOTE I—The maximum increase due to the glass fiber covering shall be permitted to be exceeded provided the overall dimension of the covered wire does not exceed the sum of the maximum thickness of the bare wire plus the maximum increase due to the heavy film coating and single glass fiber covering.

NOTE II—The increase in thickness due to the heavy film coating shall be in accordance with the applicable section for film coated wire in Part 2.

NOTE III—The increase in thickness due to the single glass fiber covering shall be determined by subtracting 0.005 inch (0.127 mm) (maximum thickness of film coating) from the maximum increase in thickness given in the table.

NOTE IV—The increase in width due to the glass fiber covering shall be equal to or less than the maximum increase in thickness given in the table. Note I applies to the increase in width as well as the increase in thickness.

NOTE V—Because it is impossible to accurately separate the glass fiber covering from the film coating, the total minimum increase in the thickness of the film coated glass fiber covered rectangular wire shall be the sum of the minimum increase due to the film coating (as shown for film coated wire in Part 2) and the minimum increase due to the glass fiber covering. The total minimum increase shall be not less than 70 percent of the maximum increase given in the table above, rounded to the nearest 0.001 inch (0.025 mm).

NOTE VI—For direct conversion of inches to millimeters, multiply inches by the factor 25.4 (exact). (This note approved as Authorized Engineering Information 3-11-1987.)

Copyright National Electrical Manufacturers Association
Provided by IHS under license with NEMA
No reproduction or networking permitted without license from IHS
Not for Resale

9009279 0001604 837

SINGLE GLASS FIBER COVERED, SILICONE TREATED, HEAVY FILM COATED RECTANGULAR AND SQUARE COPPER MAGNET WIRE THERMAL CLASS 200

Table SSQ (MW 43-C)

Minimum Increase and Maximum Overall Dimensions, Inches (mm), Due to Single Glass Fiber Covering, Heavy Film Coating and Silicone Varnish, Square Wire

Square AWG Size	Bare Wire Dimension						Nominal Radii *		Insulation				Square AWG Size
	Minimum		Nominal		Maximum				Minimum Increase in Dimension		Maximum Overall Dimension		
	inches	mm	inches	mm	inches	mm	inches	mm	inches	mm	inches	mm	
0	0.3219	8.176	0.3249	8.252	0.3279	8.329	0.040	1.02	0.011	0.279	0.344	8.738	0
1	0.2864	7.275	0.2893	7.348	0.2922	7.422	0.040	1.02	0.010	0.254	0.307	7.798	1
2	0.2550	6.477	0.2576	6.543	0.2602	6.609	0.040	1.02	0.010	0.254	0.275	6.985	2
3	0.2271	5.768	0.2294	5.827	0.2317	5.885	0.040	1.02	0.010	0.254	0.247	6.274	3
4	0.2023	5.138	0.2043	5.189	0.2063	5.240	0.040	1.02	0.010	0.254	0.221	5.613	4
5	0.1801	4.575	0.1819	4.620	0.1837	4.666	0.040	1.02	0.009	0.229	0.198	5.029	5
6	0.1604	4.074	0.1620	4.115	0.1636	4.155	0.032	0.81	0.009	0.229	0.178	4.521	6
7	0.1429	3.630	0.1443	3.665	0.1457	3.701	0.032	0.81	0.009	0.229	0.159	4.039	7
8	0.1272	3.231	0.1285	3.264	0.1298	3.297	0.032	0.81	0.009	0.229	0.143	3.632	8
9	0.1133	2.878	0.1144	2.906	0.1155	2.934	0.026	0.66	0.009	0.229	0.129	3.277	9
10	0.1009	2.563	0.1019	2.588	0.1029	2.614	0.026	0.66	0.009	0.229	0.116	2.946	10
11	0.0897	2.278	0.0907	2.304	0.0917	2.329	0.020	0.51	0.008	0.203	0.104	2.642	11
12	0.0798	2.027	0.0808	2.052	0.0818	2.078	0.020	0.51	0.008	0.203	0.094	2.388	12
13	0.0710	1.803	0.0720	1.829	0.0730	1.854	0.016	0.41	0.008	0.203	0.085	2.159	13
14	0.0631	1.603	0.0641	1.628	0.0651	1.654	0.016	0.41	0.008	0.203	0.077	1.956	14

* Radii tolerance is plus or minus 25 percent.

NOTE: For direct conversion of inches to millimeters, multiply inches by the factor 25.4 (exact).

Authorized Engineering Information 3-11-1987.

Copyright National Electrical Manufacturers Association
Provided by IHS under license with NEMA
No reproduction or networking permitted without license from IHS
Not for Resale

9009279 0001605 773

DOUBLE GLASS FIBER COVERED, SILICONE TREATED, BARE OR HEAVY FILM COATED RECTANGULAR AND SQUARE COPPER MAGNET WIRE THERMAL CLASS 200

INSULATING MATERIALS. The glass fiber shall be electrical grade continuous filament glass yarn. If any underlying film coating is used, it shall have at least a Class 180 rating. The glass fiber covering shall be wrapped firmly, closely, evenly, and continuously around the wire. Adjacent layers shall be wound in opposite directions. The glass fiber covering shall be treated with a modified silicone insulating, varnish or silicone compound to provide a tough outer finish. If a tracer is used, one or more ends of glass yarn in the outer layer shall be black or green, and the dye or pigment used for this purpose shall be sufficiently stable so as to retain its color identity after the silicone treatment and subsequent baking.

THERMAL CLASS. 200°C as defined in Part 3, para. 3.58.2.2.

GENERAL REQUIREMENTS. See Part 1.

Characteristics	Test Procedure, See Part 3, Paragraph	Requirements
1. DIMENSIONS	3.1.2.2	Rectangular Wire: a. Radii—see Table 1-13 b. Thickness and width tolerances—see Table 1-14 c. Dimensions and increase in thickness—see Tables DTW-1 and DTW-2 (MW 43-C) Square Wire: a. Radii—see Table DSQ (MW 43-C) b. Bare size, increase due to insulation—see Table DSQ (MW 43-C)
2. ADHERENCE AND FLEXIBILITY	3.2.2.2.1	Not less than 75 volts/mil (2950 v/mm) of minimum thickness of the glass-fiber covering on one side [one-half the minimum calculated from Tables DTW-1 or DTW-2 for rectangular or Table DSQ (MW 43-C) for square]
	3.2.2.2.2	No cracks shall be visible in the film coating after 20 percent elongation. Examine with normal vision and without removal of glass fiber covering
3. ELONGATION	3.3.2.2.1	Not less than 32 percent for thickness of 0.049 inch (1.25 mm) and greater or 30 percent for thicknesses less than 0.049 inch (1.25 mm).
6. SPRINGBACK	3.6.2.1	Not greater 5° for Glass Fiber Covered Bare Not greater than 5.5° for Glass Fiber Covered Heavy Film Coated
7. DIELECTRIC STRENGTH	3.7.2.2	Not less than 90 volts/mil (3543 v/mm) of the minimum thickness of the glass fiber covering on one side [one-half the minimum calculated from Tables DTW-1, DTW-2 or DSQ (MW 43-C)] plus the minimum breakdown given in Part 2 for the film-coated wire

Copyright National Electrical Manufacturers Association
Provided by IHS under license with NEMA
No reproduction or networking permitted without license from IHS
Not for Resale

DOUBLE GLASS FIBER COVERED, SILICONE TREATED, BARE OR HEAVY FILM COATED RECTANGULAR AND SQUARE COPPER MAGNET WIRE
THERMAL CLASS 200
Table DTW-1 (MW 43-C)

Maximum Increase in Thickness, Inches (mm), Due to Double Glass-fiber Covering and Silicone Varnish, Rectangular Wire

Nominal Thickness		Nominal Width																													Nominal Thickness	
Millimeters	Inches	2.00	2.12	2.24	2.37	2.50	2.65	2.80	3.00	3.15	3.35	3.55	3.75	4.00	4.25	4.50	4.75	5.00	5.30	5.60	6.00	6.30	6.70	7.10	7.50	8.00	8.50	9.00	9.50	10.0	10.6	11.2	11.8	12.5	Inches	Millimeters
		0.079	† 0.083	0.088	† 0.093	0.098	† 0.104	0.110	† 0.118	0.124	† 0.132	0.140	† 0.148	0.157	† 0.167	0.177	† 0.187	0.197	† 0.209	0.220	† 0.236	0.248	† 0.264	0.280	† 0.295	0.315	† 0.335	0.354	† 0.374	0.394	† 0.417	0.441	† 0.465	0.492		
0.63	0.025																																		0.025	0.63
0.71	0.028																																		0.028	0.71
0.80	0.031																																		0.031	0.80
0.90	0.035																																		0.035	0.90
1.00	0.039	0.012" (0.305 mm)							0.013" (0.330 mm)			0.014" (0.356 mm)					0.015" (0.381 mm)				0.016" (0.406 mm)					0.018" (0.457 mm)								0.039	1.00
1.12	0.044																																		0.044	1.12
1.25	0.049																																		0.049	1.25
1.40	0.055																																		0.055	1.40
1.60	0.063																																		0.063	1.60
1.80	0.071																																		0.071	1.80
2.00	0.079																																		0.079	2.00
2.24	0.088																																		0.088	2.24
2.50	0.098																																		0.098	2.50
2.80	0.110																																		0.110	2.80
3.15	0.124																																		0.124	3.15
3.55	0.140																								0.017" (0.432 mm)						0.019" (0.483 mm)				0.140	3.55
4.00	0.157																																		0.157	4.00
4.50	0.177																																		0.177	4.50
5.00	0.197																																		0.197	5.00
5.60	0.220																																		0.220	5.60

† R-40 Series Intermediate Numbers.

EXAMPLE—Preferred Size ..... 0.055 x 0.110 (R-20 x R-20)
Intermediate Size ... 0.055 x 0.118 (R-20 x R-40)

NOTE I—The maximum increase due to the glass fiber covering shall be permitted to be exceeded provided the overall dimension of the covered wire does not exceed the sum of the maximum thickness of the bare wire plus the maximum increase due to the glass fiber covering.

NOTE II—The minimum increase due to the glass fiber covering shall be not less than 70 percent of the maximum shown in the table above, rounded to the nearest 0.001 inch (0.025 mm).

NOTE III—The increase in width due to the glass fiber covering shall be equal to or less than the maximum increase in thickness given in the table. Note 1 applies to the increase in width as well as the increase in thickness.

NOTE IV—For direct conversion of inches to millimeters, multiply inches by the factor 25.4 (exact). (This note approved as Authorized Engineering Information 3-11-1987.)

Copyright National Electrical Manufacturers Association
Provided by IHS under license with NEMA
No reproduction or networking permitted without license from IHS
Not for Resale

9009279 0001607 546

DOUBLE GLASS FIBER COVERED, SILICONE TREATED, BARE OR HEAVY FILM COATED RECTANGULAR AND SQUARE COPPER MAGNET WIRE
THERMAL CLASS 200
Table DTW-2 (MW 43-C)

Maximum Increase in Thickness, Inches (mm), Due to Heavy Film Coating, Double Glass-fiber Covering and Silicone Varnish, Rectangular Wire

Nominal Thickness		Nominal Width																										Nominal Thickness	
Millimeters	Inches	2.00	2.12	2.24	2.37	2.50	2.65	2.80	3.00	3.15	3.35	3.55	3.75	4.00	4.25	4.50	4.75	5.00	5.30	5.60	6.00	6.30	6.70	7.10	7.50	8.00	8.50	9.00	9.50	10.0	10.6	11.2	11.8	12.5	Inches	Millimeters
		0.079	† 0.083	0.088	† 0.093	0.098	† 0.104	0.110	† 0.118	0.124	† 0.132	0.140	† 0.148	0.157	† 0.167	0.177	† 0.187	0.197	† 0.209	0.220	† 0.236	0.248	† 0.264	0.280	† 0.295	0.315	† 0.335	0.354	† 0.374	0.394	† 0.417	0.441	† 0.465	0.492		
0.63	0.025																																		0.025	0.63
0.71	0.028																																		0.028	0.71
0.80	0.031																																		0.031	0.80
0.90	0.035																																		0.035	0.90
1.00	0.039	0.017" (0.432 mm)							0.018" (0.457 mm)			0.019" (0.483 mm)				0.020" (0.508 mm)					0.021" (0.533 mm)							0.023" (0.584 mm)							0.039	1.00
1.12	0.044																																		0.044	1.12
1.25	0.049																																		0.049	1.25
1.40	0.055																																		0.055	1.40
1.60	0.063																																		0.063	1.60
1.80	0.071																																		0.071	1.80
2.00	0.079																																		0.079	2.00
2.24	0.088																																		0.088	2.24
2.50	0.098																																		0.098	2.50
2.80	0.110																																		0.110	2.80
3.15	0.124																																		0.124	3.15
3.55	0.140																							0.022" (0.559 mm)						0.024" (0.610 mm)					0.140	3.55
4.00	0.157																																		0.157	4.00
4.50	0.177																																		0.177	4.50
5.00	0.197																																		0.197	5.00
5.60	0.220																																		0.220	5.60

† R-40 Series Intermediate Numbers.

EXAMPLE—Preferred Size ..... 0.055 x 0.110 (R-20 x R-20)
Intermediate Size ... 0.055 x 0.118 (R-20 x R-40)

NOTE I—The maximum increase due to the glass fiber covering shall be permitted to be exceeded provided the overall dimension of the covered wire does not exceed the sum of the maximum thickness of the bare wire plus the maximum increase given in Table DTW-2 (MW 43-C).

NOTE II—The increase in thickness due to the heavy film coating shall be in accordance with the applicable section for film coated wire in Part 2.

NOTE III—The minimum increase due to the glass fiber covering shall be not less than 70 percent of the maximum shown in Table DTW-1 (MW 43-C), rounded to the nearest 0.001 inch (0.025 mm).

NOTE IV—The increase in width due to the glass fiber covering shall be equal to or less than the maximum increase in thickness given in Table DTW-1 (MW 43-C). Note I applies to the increase in width as well as the increase in thickness.

NOTE V—Because it is impossible to accurately separate the glass fiber covering from the film coating, the total minimum increase in the thickness of a film coated glass fiber covered rectangular wire shall be the sum of the minimum increase due to the film coating (as shown for film coated wire in Part 2) and the minimum increase due to the glass fiber covering. The total minimum increase shall be not less than 70 percent of the maximum increase given in Table DTW-1 (MW 43-C) plus the minimum for the film coated wire, rounded to the nearest 0.001 inch (0.025 mm).

NOTE VI—For direct conversion of inches to millimeters, multiply inches by the factor 25.4 (exact). (This note approved as Authorized Engineering Information 3-11-1987.)

Copyright National Electrical Manufacturers Association
Provided by IHS under license with NEMA
No reproduction or networking permitted without license from IHS
Not for Resale

9009279 0001608 482

DOUBLE GLASS FIBER COVERED, SILICONE TREATED, BARE OR HEAVY FILM COATED RECTANGULAR AND SQUARE COPPER MAGNET WIRE
THERMAL CLASS 200
Table DSQ (MW 43-C)

Minimum Increase and Maximum Overall Dimensions Due to Double Glass fiber Covering and Silicone Varnish, Square Wire

Square AWG Size	Bare Wire Dimensions						Nominal Radii *		Bare Double-glass-covered Wire				Heavy-film-coated Double-glass-covered Wire			
	Minimum		Nominal		Maximum				Minimum Increase in Dimension		Maximum Overall Dimension		Minimum Increase in Dimension		Maximum Overall Dimension	
	inches	mm	inches	mm	inches	mm	inches	mm	inches	mm	inches	mm	inches	mm	inches	mm
0	0.3219	8.176	0.3249	8.252	0.3279	8.329	0.040	1.02	0.013	0.330	0.346	8.788	0.016	0.406	0.351	8.915
1	0.2864	7.275	0.2893	7.348	0.2922	7.422	0.040	1.02	0.012	0.305	0.309	7.849	0.015	0.381	0.314	7.976
2	0.2550	6.477	0.2576	6.543	0.2602	6.609	0.040	1.02	0.012	0.305	0.277	7.036	0.015	0.381	0.282	7.163
3	0.2271	5.768	0.2294	5.827	0.2317	5.885	0.040	1.02	0.011	0.279	0.248	6.299	0.014	0.356	0.253	6.426
4	0.2023	5.138	0.2043	5.189	0.2063	5.240	0.040	1.02	0.011	0.279	0.222	5.639	0.014	0.356	0.227	5.766
5	0.1801	4.575	0.1819	4.620	0.1837	4.666	0.040	1.02	0.011	0.279	0.199	5.055	0.014	0.356	0.204	5.182
6	0.1604	4.074	0.1620	4.115	0.1636	4.155	0.032	0.81	0.011	0.279	0.179	4.547	0.014	0.356	0.184	4.674
7	0.1429	3.630	0.1443	3.665	0.1457	3.701	0.032	0.81	0.010	0.254	0.160	4.064	0.013	0.330	0.165	4.191
8	0.1272	3.231	0.1285	3.264	0.1298	3.297	0.032	0.81	0.010	0.254	0.144	3.658	0.013	0.330	0.149	3.785
9	0.1133	2.878	0.1144	2.906	0.1155	2.934	0.026	0.66	0.009	0.229	0.129	3.277	0.012	0.305	0.134	3.404
10	0.1009	2.563	0.1019	2.588	0.1029	2.614	0.026	0.66	0.009	0.229	0.116	2.946	0.012	0.305	0.121	3.073
11	0.0897	2.278	0.0907	2.304	0.0917	2.329	0.020	0.51	0.008	0.203	0.104	2.642	0.011	0.279	0.109	2.769
12	0.0798	2.027	0.0808	2.052	0.0818	2.078	0.020	0.51	0.008	0.203	0.094	2.388	0.011	0.279	0.099	2.515
13	0.0710	1.803	0.0720	1.829	0.0730	1.854	0.016	0.41	0.008	0.203	0.085	2.159	0.011	0.279	0.090	2.286
14	0.0631	1.603	0.0641	1.628	0.0651	1.654	0.016	0.41	0.008	0.203	0.077	1.956	0.011	0.279	0.082	2.083

* Radii tolerance is plus or minus 25 percent.

NOTE: For direct conversion of inches to millimeters, multiply inches by the factor 25.4 (exact).

Authorized Engineering Information 3-11-1987.

Copyright National Electrical Manufacturers Association
Provided by IHS under license with NEMA
No reproduction or networking permitted without license from IHS
Not for Resale

9009279 0001609 319

SINGLE GLASS FIBER COVERED, SILICONE TREATED, BARE OR FILM COATED ROUND COPPER MAGNET WIRE THERMAL CLASS 200

INSULATING MATERIALS. The glass fiber shall be electrical grade continuous filament glass yarn. If an underlying film coating is used, it shall have at least a Class 180 rating. The glass fiber covering shall be wrapped firmly, closely, evenly, and continuously around the wire. The glass fiber covering shall be treated with a modified silicone insulating varnish or silicone compound to provide a tough outer finish. If a tracer is used, one or more ends of glass yarn in the outer layer shall be black or green, and the dye or pigment used for this purpose shall be sufficiently stable so as to retain its color identity after the silicone treatment and subsequent baking.

THERMAL CLASS. 200°C as defined in Part 3, para. 3.58.1.2.

GENERAL REQUIREMENTS. See Part 1.

Characteristics	Test Procedure, See Part 3, Paragraph	Requirements
1. DIMENSIONS	3.1.1.2	See Table S (MW 44-C)
2. ADHERENCE AND FLEXIBILITY	3.2.1.2	Covering shall not open sufficiently to expose the bare or film-coated wire after bending on mandrel sizes as follows:

AWG Size	Mandrel Diameter
0 and larger	15d
1 to 30	10d

3. ELONGATION	3.3.1.2.1	Not less than the following:

AWG Size	Minimum Elongation Percent	
	With Glass Fiber Covering	Glass Fiber Covering Removed
4/0–0	35.0	35.0
1–8	30.0	30.0
9–15	20.0	30.0
16–21	15.0	25.0
22–28	...	20.0
29 and 30	...	15.0

6. SPRINGBACK	3.6.2.1	Not greater than 5° for Glass Fiber Covered Bare Not greater than 5.5° for Glass Fiber Covered Film Coated
7. DIELECTRIC STRENGTH	3.7.1.2.1	Not less than the following:

AWG Size	Diameter of Mandrel		Minimum Breakdown, Volts*
	inches	mm	
9 and larger	...	...	170
10–23	1.00	25.4	360
24–30	0.25	6.3	225

*For glass fiber covered wire having an underlying film coating, add the minimum breakdown voltage given in Part 2 for the film-coated wire

Copyright National Electrical Manufacturers Association
Provided by IHS under license with NEMA
No reproduction or networking permitted without license from IHS
Not for Resale

9009279 0001610 030

SINGLE GLASS FIBER COVERED, SILICONE TREATED, BARE OR FILM COATED ROUND COPPER MAGNET WIRE THERMAL CLASS 200

Table S (MW 44-C)

AWG Size	Bare Wire Diameter, Inches†			Minimum Increase in Glass Fiber Covering, Inches†	Maximum Overall Diameter, Inches†			AWG Size
	Minimum	Nominal	Maximum		Bare	Single Film	Heavy Film	
4/0	0.4554	0.4600	0.4646	0.0045	0.4716	.....	.....	4/0
3/0	0.4055	0.4096	0.4137	0.0045	0.4207	.....	.....	3/0
2/0	0.3612	0.3648	0.3684	0.0045	0.3754	.....	.....	2/0
1/0	0.3217	0.3249	0.3281	0.0045	0.3351	.....	.....	1/0
1	0.2864	0.2893	0.2922	0.0045	0.2992	.....	.....	1
2	0.2550	0.2576	0.2602	0.0045	0.2672	.....	.....	2
3	0.2271	0.2294	0.2317	0.0045	0.2387	.....	.....	3
4	0.2023	0.2043	0.2053*	0.0045	0.2133	.....	0.2168	4
5	0.1801	0.1819	0.1828*	0.0045	0.1907	.....	0.1942	5
6	0.1604	0.1620	0.1628*	0.0045	0.1706	.....	0.1741	6
7	0.1429	0.1443	0.1450*	0.0045	0.1527	.....	0.1561	7
8	0.1272	0.1285	0.1292*	0.0045	0.1368	.....	0.1402	8
9	0.1133	0.1144	0.1150*	0.0045	0.1225	.....	0.1259	9
10	0.1009	0.1019	0.1024*	0.0040	0.1089	.....	0.1121	10
11	0.0898	0.0907	0.0912*	0.0040	0.0976	.....	0.1008	11
12	0.0800	0.0808	0.0812*	0.0040	0.0876	.....	0.0907	12
13	0.0713	0.0720	0.0724*	0.0040	0.0787	.....	0.0817	13
14	0.0635	0.0641	0.0644*	0.0040	0.0707	0.0726	0.0742	14
15	0.0565	0.0571	0.0574*	0.0040	0.0637	0.0654	0.0669	15
16	0.0503	0.0508	0.0511*	0.0040	0.0573	0.0591	0.0605	16
17	0.0448	0.0453	0.0455*	0.0040	0.0518	0.0535	0.0548	17
18	0.0399	0.0403	0.0405*	0.0040	0.0467	0.0484	0.0497	18
19	0.0355	0.0359	0.0361*	0.0040	0.0423	0.0439	0.0451	19
20	0.0317	0.0320	0.0322*	0.0040	0.0383	0.0399	0.0411	20
21	0.0282	0.0285	0.0286*	0.0040	0.0348	0.0363	0.0374	21
22	0.0250	0.0253	0.0254*	0.0040	0.0316	0.0330	0.0341	22
23	0.0224	0.0226	0.0227*	0.0040	0.0288	0.0303	0.0313	23
24	0.0199	0.0201	0.0202*	0.0025	0.0243	0.0257	0.0267	24
25	0.0177	0.0179	0.0180*	0.0025	0.0221	0.0234	0.0243	25
26	0.0157	0.0159	0.0160*	0.0025	0.0201	0.0213	0.0222	26
27	0.0141	0.0142	0.0143	0.0025	0.0183	0.0196	0.0204	27
28	0.0125	0.0126	0.0127	0.0025	0.0167	0.0180	0.0187	28
29	0.0112	0.0113	0.0114	0.0025	0.0154	0.0166	0.0173	29
30	0.0099	0.0100	0.0101	0.0025	0.0141	0.0152	0.0159	30

*This maximum bare wire diameter shall be permitted to be exceeded; see 1.4.9.1.
†For metric equivalent, see 1.5.
NOTE: For direct conversion inches to millimeters, multiply inches by the factor 25.4 (exact). (This note approved as Authorized Engineering Information 2-11-1977.)

Copyright National Electrical Manufacturers Association
Provided by IHS under license with NEMA
No reproduction or networking permitted without license from IHS
Not for Resale

9009279 0001611 T77

DOUBLE GLASS FIBER COVERED, SILICONE TREATED, BARE OR FILM COATED ROUND COPPER MAGNET WIRE THERMAL CLASS 200

INSULATING MATERIALS. The glass fiber shall be electrical grade continuous filament glass yarn. If any underlying film coating is used, it shall have at least a Class 180 rating. The glass fiber covering shall be wrapped firmly, closely, evenly, and continuously around the wire. Adjacent layers shall be wound in opposite directions. The glass fiber covering shall be treated with a modified silicone insulating varnish or silicone compound to provide a tough outer finish. If a tracer is used, one or more ends of glass yarn in the outer layer shall be black or green, and the dye or pigment used for this purpose shall be sufficiently stable so as to retain its color identity after the silicone treatment and subsequent baking.

THERMAL CLASS. 200°C as defined in Part 3, para. 3.58.1.2.

GENERAL REQUIREMENTS. See Part 1.

Characteristics	Test Procedure, See Part 3, Paragraph	Requirements
1. DIMENSIONS	3.1.1.2	See Table D (MW 44-C)
2. ADHERENCE AND FLEXIBILITY	3.2.1.2	Covering shall not open sufficiently to expose the bare or film-coated wire after bending on mandrel sizes as follows:

AWG Size	Mandrel Diameter
0 and larger	15d
1 to 30	10d

3. ELONGATION — 3.3.1.2.1 — Not less than the following:

AWG Size	Minimum Elongation Percent: With Glass Fiber Covering	Minimum Elongation Percent: Glass Fiber Covering Removed
4/0–0	35.0	35.0
1–8	30.0	30.0
9–15	20.0	30.0
16–21	15.0	25.0
22–28	...	20.0
29 and 30	...	15.0

6. SPRINGBACK — 3.6.2.1 — Not greater than 5° for Glass Fiber Covered Bare
Not greater than 5.5° for Glass Fiber Covered Film Coated

7. DIELECTRIC STRENGTH — 3.7.1.2.1 — Not less than the following:

AWG Size	Diameter of Mandrel: inches	Diameter of Mandrel: mm	Minimum Breakdown, Volts*
4/0–9	...	...	315
10–23	1.00	25.4	540
24–30	0.25	6.3	400

*For glass fiber covered wire having an underlying film coating, add the minimum breakdown voltage given in Part 2 for the film-coated wire

Copyright National Electrical Manufacturers Association
Provided by IHS under license with NEMA
No reproduction or networking permitted without license from IHS
Not for Resale

DOUBLE GLASS FIBER COVERED, SILICONE TREATED, BARE OR FILM COATED, ROUND COPPER MAGNET WIRE
THERMAL CLASS 200
Table D (MW 44-C)

AWG Size	Bare Wire Diameter, Inches†			Minimum Increase in Glass Fiber Covering, Inches†	Maximum Overall Diameter, Inches†			AWG Size
	Minimum	Nominal	Maximum		Bare	Single Film	Heavy Film	
4/0	0.4554	0.4600	0.4646	0.0070	0.4756	.....	.....	4/0
3/0	0.4055	0.4096	0.4137	0.0070	0.4247	.....	.....	3/0
2/0	0.3612	0.3648	0.3684	0.0070	0.3794	.....	.....	2/0
1/0	0.3217	0.3249	0.3281	0.0070	0.3391	.....	.....	1/0
1	0.2864	0.2893	0.2922	0.0070	0.3032	.....	.....	1
2	0.2550	0.2576	0.2602	0.0070	0.2712	.....	.....	2
3	0.2271	0.2294	0.2317	0.0070	0.2427	.....	.....	3
4	0.2023	0.2043	0.2053*	0.0070	0.2173	.....	0.2210	4
5	0.1801	0.1819	0.1828*	0.0070	0.1947	.....	0.1982	5
6	0.1604	0.1620	0.1628*	0.0070	0.1746	.....	0.1781	6
7	0.1429	0.1443	0.1450*	0.0070	0.1567	.....	0.1601	7
8	0.1272	0.1285	0.1292*	0.0070	0.1408	.....	0.1442	8
9	0.1133	0.1144	0.1150*	0.0070	0.1265	.....	0.1299	9
10	0.1009	0.1019	0.1024*	0.0060	0.1119	.....	0.1151	10
11	0.0898	0.0907	0.0912*	0.0060	0.1006	.....	0.1038	11
12	0.0800	0.0808	0.0812*	0.0060	0.0906	.....	0.0937	12
13	0.0713	0.0720	0.0724*	0.0060	0.0817	.....	0.0847	13
14	0.0635	0.0641	0.0644*	0.0060	0.0737	0.0726	0.0772	14
15	0.0565	0.0571	0.0574*	0.0060	0.0667	0.0654	0.0699	15
16	0.0503	0.0508	0.0511*	0.0060	0.0603	0.0621	0.0635	16
17	0.0448	0.0453	0.0455*	0.0060	0.0548	0.0565	0.0578	17
18	0.0399	0.0403	0.0405*	0.0060	0.0497	0.0514	0.0527	18
19	0.0355	0.0359	0.0361*	0.0060	0.0453	0.0469	0.0481	19
20	0.0317	0.0320	0.0322*	0.0060	0.0413	0.0429	0.0441	20
21	0.0282	0.0285	0.0286*	0.0060	0.0378	0.0393	0.0404	21
22	0.0250	0.0253	0.0254*	0.0060	0.0346	0.0360	0.0371	22
23	0.0224	0.0226	0.0227*	0.0060	0.0318	0.0333	0.0343	23
24	0.0199	0.0201	0.0202*	0.0045	0.0263	0.0277	0.0287	24
25	0.0177	0.0179	0.0180*	0.0045	0.0241	0.0254	0.0263	25
26	0.0157	0.0159	0.0160*	0.0045	0.0221	0.0233	0.0242	26
27	0.0141	0.0142	0.0143	0.0045	0.0203	0.0216	0.0224	27
28	0.0125	0.0126	0.0127	0.0045	0.0187	0.0200	0.0207	28
29	0.0112	0.0113	0.0114	0.0045	0.0174	0.0186	0.0193	29
30	0.0099	0.0100	0.0101	0.0045	0.0161	0.0172	0.0179	30

*This maximum bare wire diameter shall be permitted to be exceeded; see 1.4.9.1.
†For metric equivalent, see 1.5.
NOTE: For direct conversion inches to millimeters, multiply inches by the factor 25.4 (exact). (This note approved as Authorized Engineering Information 3-11-1987.)

Copyright National Electrical Manufacturers Association
Provided by IHS under license with NEMA
No reproduction or networking permitted without license from IHS
Not for Resale

9009279 0001613 84T

SINGLE POLYESTER GLASS FIBER COVERED, BARE OR FILM COATED, ROUND COPPER MAGNET WIRE THERMAL CLASS 155

INSULATING MATERIALS. The fiber covering shall consist of a combination of polyester and glass fibers. The glass fibers shall be electrical grade continuous filament glass yarn. The polyester fiber shall be a high grade yarn resulting from the linear polymerization of ethylene glycol and terephthalic acid. The maximum content by weight of polyester fiber in the yarn shall not exceed 50 percent. If an underlying film coating is used, it shall have at least a Class 130 rating. The polyester glass fiber covering shall be wrapped firmly, closely, evenly, and continuously around the wire. The polyester glass fiber covering shall be fused; when required it may be treated with an insulating varnish of compound to provide a tougher outer finish.

THERMAL CLASS. 155°C as defined in Part 3, para. 3.58.1.2.

GENERAL REQUIREMENTS. See Part 1.

Characteristics	Test Procedure, See Part 3, Paragraph	Requirements
1. DIMENSIONS	3.1.1.2	See Table S (MW 45-C)
2. ADHERENCE AND FLEXIBILITY	3.2.1.2.1	Covering shall not open sufficiently to expose the bare or underlying film-coated wire after bending 9 AWG and heavier wire on a 10d mandrel and 10 through 30 AWG wire on a 5d mandrel
	3.2.1.2.2	There shall be no loosening, fraying or loss of adherence of the covering except at the point of rupture
3. ELONGATION	3.3.1.2.2	Not less than the following:

AWG Size	Minimum Elongation Percent
4–8	30.0
9–15	20.0
16–21	15.0
22–30	10.0

6. SPRINGBACK	3.6.2.1	Not greater than 5° for Glass Fiber Covered Bare Not greater than 5.5° for Glass Fiber Covered Film Coated	
7. DIELECTRIC STRENGTH	3.7.1.2.1	Not less than the following:	

AWG Size	Diameter of Mandrel, inches	Diameter of Mandrel, mm	Minimum Breakdown, Volts*
4/0–9	...	...	150
10–23	1.00	25.4	360
24–30	0.25	6.3	225

*For polyester glass fiber covered wire having an underlying film coating, add the minimum breakdown voltage given in Part 2 for the film-coated wire

Copyright National Electrical Manufacturers Association
Provided by IHS under license with NEMA
No reproduction or networking permitted without license from IHS
Not for Resale

SINGLE POLYESTER GLASS FIBER COVERED BARE OR FILM COATED ROUND COPPER MAGNET WIRE THERMAL CLASS 155

Table S (MW 45-C)

AWG Size	Bare Wire Diameter, Inches†			Minimum Increase in Single Polyester-glass-fiber Covering, Inches†	Maximum Overall Diameter, Inches†			AWG Size
	Minimum	Nominal	Maximum		Bare	Single Film	Heavy Film	
4/0	0.4554	0.4600	0.4646	0.0040	0.4696	.....	.....	4/0
3/0	0.4055	0.4096	0.4137	0.0040	0.4187	.....	.....	3/0
2/0	0.3612	0.3648	0.3684	0.0040	0.3734	.....	.....	2/0
1/0	0.3217	0.3249	0.3281	0.0040	0.3331	.....	.....	1/0
1	0.2864	0.2893	0.2922	0.0040	0.2972	.....	.....	1
2	0.2550	0.2576	0.2602	0.0040	0.2652	.....	.....	2
3	0.2271	0.2294	0.2317	0.0040	0.2367	.....	.....	3
4	0.2023	0.2043	0.2053*	0.0040	0.2123	.....	0.2158	4
5	0.1801	0.1819	0.1828*	0.0040	0.1897	.....	0.1932	5
6	0.1604	0.1620	0.1628*	0.0040	0.1696	.....	0.1731	6
7	0.1429	0.1443	0.1450*	0.0040	0.1517	.....	0.1551	7
8	0.1272	0.1285	0.1292*	0.0040	0.1358	.....	0.1392	8
9	0.1133	0.1144	0.1150*	0.0040	0.1215	.....	0.1249	9
10	0.1009	0.1019	0.1024*	0.0035	0.1079	.....	0.1111	10
11	0.0898	0.0907	0.0912*	0.0035	0.0966	.....	0.0998	11
12	0.0800	0.0808	0.0812*	0.0035	0.0866	.....	0.0897	12
13	0.0713	0.0720	0.0724*	0.0035	0.0777	.....	0.0807	13
14	0.0635	0.0641	0.0644*	0.0035	0.0697	0.0716	0.0732	14
15	0.0565	0.0571	0.0574*	0.0035	0.0627	0.0644	0.0659	15
16	0.0503	0.0508	0.0511*	0.0035	0.0563	0.0581	0.0595	16
17	0.0448	0.0453	0.0455*	0.0035	0.0508	0.0525	0.0538	17
18	0.0399	0.0403	0.0405*	0.0035	0.0457	0.0474	0.0487	18
19	0.0355	0.0359	0.0361*	0.0035	0.0413	0.0429	0.0441	19
20	0.0317	0.0320	0.0322*	0.0035	0.0373	0.0389	0.0401	20
21	0.0282	0.0285	0.0286*	0.0035	0.0338	0.0353	0.0364	21
22	0.0250	0.0253	0.0254*	0.0035	0.0306	0.0320	0.0331	22
23	0.0224	0.0226	0.0227*	0.0035	0.0278	0.0293	0.0303	23
24	0.0199	0.0201	0.0202*	0.0025	0.0253	0.0267	0.0277	24
25	0.0177	0.0179	0.0180*	0.0025	0.0231	0.0244	0.0253	25
26	0.0157	0.0159	0.0160*	0.0025	0.0211	0.0223	0.0232	26
27	0.0141	0.0142	0.0143	0.0025	0.0193	0.0206	0.0214	27
28	0.0125	0.0126	0.0127	0.0025	0.0177	0.0190	0.0197	28
29	0.0112	0.0113	0.0114	0.0025	0.0164	0.0176	0.0183	29
30	0.0099	0.0100	0.0101	0.0025	0.0151	0.0162	0.0169	30

*This maximum bare wire diameter shall be permitted to be exceeded; see 1.4.9.1.
†For metric equivalent, see 1.5.
NOTE: For direct conversion inches to millimeters, multiply inches by the factor 25.4 (exact). (This note approved as Authorized Engineering [illegible] 987.)

Copyright National Electrical Manufacturers Association
Provided by IHS under license with NEMA
No reproduction or networking permitted without license from IHS
Not for Resale

9009279 0001615 612

DOUBLE POLYESTER GLASS FIBER COVERED, BARE OR FILM COATED, ROUND COPPER MAGNET WIRE THERMAL CLASS 155

INSULATING MATERIALS. The fiber covering shall consist of a combination of polyester and glass fibers. The glass fibers shall electrical grade continuous filament glass yarn. The polyester fiber shall be a high grade yarn resulting from the linear polymerization of ethylene glycol and terephthalic acid. The maximum content by weight of polyester fiber in the yarn shall not exceed 50 percent. If an underlying film coating is used, it shall have at least a Class 130 rating. The polyester glass fiber covering shall be wrapped firmly, closely, evenly, and continuously around the wire. Adjacent layers shall be wound in opposite directions. The polyester glass fiber covering shall be fused; when required it may be treated with an insulating varnish of compound to provide a tougher outer finish.

THERMAL CLASS. 155°C as defined in Part 3, para. 3.58.1.2.

GENERAL REQUIREMENTS. See Part 1.

Characteristics	Test Procedure, See Part 3, Paragraph	Requirements
1. DIMENSIONS	3.1.1.2	See Table D (MW 45-C)
2. ADHERENCE AND FLEXIBILITY	3.2.1.2.1	Covering shall not open sufficiently to expose the bare or underlying film-coated wire after bending 9 AWG and heavier wire on a 10d mandrel and 10 through 30 AWG wire on a 5d mandrel
	3.2.1.2.2	There shall be no loosening, fraying or loss of adherence of the covering except at the point of rupture
3. ELONGATION	3.3.1.2.2	Not less than the following:

AWG Size	Minimum Elongation, Percent
4–8	30.0
9–15	20.0
16–21	15.0
22–30	10.0

6. SPRINGBACK	3.6.2.1	Not greater than 5° for Glass Fiber Covered Bare Not greater than 5.5° for Glass Fiber Covered Film Coated	
7. DIELECTRIC STRENGTH	3.7.1.2.1	Not less than the following:	

AWG Size	Diameter of Mandrel, inches	Diameter of Mandrel, mm	Minimum Breakdown, Volts*
4/0–9	...	...	270
10–23	1.00	25.4	540
24–30	0.25	6.3	400

*For polyester glass fiber covered wire having an underlying film coating, add the minimum breakdown voltage given in Part 2 for the film-coated wire

Copyright National Electrical Manufacturers Association
Provided by IHS under license with NEMA
No reproduction or networking permitted without license from IHS
Not for Resale

9009279 0001616 559

DOUBLE POLYESTER GLASS FIBER COVERED, SILICONE TREATED, BARE OR FILM COATED, ROUND COPPER MAGNET WIRE

THERMAL CLASS 155

Table D (MW 45-C)

AWG Size	Bare Wire Diameter, Inches†			Minimum Increase in Double Polyester-glass-fiber Covering, Inches†	Maximum Overall Diameter, Inches†			AWG Size
	Minimum	Nominal	Maximum		Bare	Single Film	Heavy Film	
4/0	0.4554	0.4600	0.4646	0.0060	0.4736	.....	.....	4/0
3/0	0.4055	0.4096	0.4137	0.0060	0.4227	.....	.....	3/0
2/0	0.3612	0.3648	0.3684	0.0060	0.3774	.....	.....	2/0
1/0	0.3217	0.3249	0.3281	0.0060	0.3371	.....	.....	1/0
1	0.2864	0.2893	0.2922	0.0060	0.3012	.....	.....	1
2	0.2550	0.2576	0.2602	0.0060	0.2692	.....	.....	2
3	0.2271	0.2294	0.2317	0.0060	0.2407	.....	.....	3
4	0.2023	0.2043	0.2053 *	0.0060	0.2153	.....	0.2188	4
5	0.1801	0.1819	0.1828 *	0.0060	0.1927	.....	0.1962	5
6	0.1604	0.1620	0.1628 *	0.0060	0.1726	.....	0.1761	6
7	0.1429	0.1443	0.1450 *	0.0060	0.1547	.....	0.1581	7
8	0.1272	0.1285	0.1292 *	0.0060	0.1388	.....	0.1422	8
9	0.1133	0.1144	0.1150 *	0.0060	0.1245	.....	0.1279	9
10	0.1009	0.1019	0.1024 *	0.0055	0.1109	.....	0.1141	10
11	0.0898	0.0907	0.0912 *	0.0055	0.0996	.....	0.1028	11
12	0.0800	0.0808	0.0812 *	0.0055	0.0896	.....	0.0927	12
13	0.0713	0.0720	0.0724 *	0.0055	0.0807	.....	0.0837	13
14	0.0635	0.0641	0.0644 *	0.0055	0.0727	0.0746	0.0762	14
15	0.0565	0.0571	0.0574 *	0.0055	0.0657	0.0674	0.0689	15
16	0.0503	0.0508	0.0511 *	0.0055	0.0593	0.0611	0.0625	16
17	0.0448	0.0453	0.0455 *	0.0055	0.0538	0.0555	0.0568	17
18	0.0399	0.0403	0.0405 *	0.0055	0.0487	0.0504	0.0517	18
19	0.0355	0.0359	0.0361 *	0.0055	0.0443	0.0459	0.0471	19
20	0.0317	0.0320	0.0322 *	0.0055	0.0403	0.0419	0.0431	20
21	0.0282	0.0285	0.0286 *	0.0055	0.0368	0.0383	0.0394	21
22	0.0250	0.0253	0.0254 *	0.0055	0.0336	0.0350	0.0361	22
23	0.0224	0.0226	0.0227 *	0.0055	0.0308	0.0323	0.0333	23
24	0.0199	0.0201	0.0202 *	0.0045	0.0268	0.0282	0.0292	24
25	0.0177	0.0179	0.0180 *	0.0045	0.0246	0.0259	0.0268	25
26	0.0157	0.0159	0.0160*	0.0045	0.0226	0.0238	0.0247	26
27	0.0141	0.0142	0.0143	0.0045	0.0208	0.0221	0.0229	27
28	0.0125	0.0126	0.0127	0.0045	0.0192	0.0205	0.0212	28
29	0.0112	0.0113	0.0114	0.0045	0.0179	0.0191	0.0198	29
30	0.0099	0.0100	0.0101	0.0045	0.0166	0.0177	0.0184	30

*This maximum bare wire diameter shall be permitted to be exceeded; see 1.4.9.1.
†For metric equivalent, see 1.5.
NOTE: For direct conversion inches to millimeters, multiply inches by the factor 25.4 (exact). (This note approved as Authorized Engineering Information 3-11-1987.)

Copyright National Electrical Manufacturers Association
Provided by IHS under license with NEMA
No reproduction or networking permitted without license from IHS
Not for Resale

9009279 0001617 495

SINGLE POLYESTER GLASS FIBER COVERED HEAVY FILM COATED RECTANGULAR AND SQUARE COPPER MAGNET WIRE THERMAL CLASS 155

INSULATING MATERIALS. The fiber covering shall consist of a combination of polyester and glass fibers. The glass fibers shall be electrical grade continuous filament glass yarn. The polyester fiber shall be a high grade yarn resulting from the linear polymerization of ethylene glycol and terephthalic acid. The maximum content by weight of polyester fiber in the yarn shall not exceed 50 percent. The underlying film coating shall have at least a Class 130 rating. The polyester glass fiber covering shall be wrapped firmly, closely, evenly, and continuously around the wire. The polyester glass fiber shall be fused; when required it may be treated with an insulating varnish or compound to provide a tougher outer finish.

THERMAL CLASS. 155°C as defined in Part 3, para. 3.58.2.2.

GENERAL REQUIREMENTS. See Part 1.

Characteristics	Test Procedure, See Part 3, Paragraph	Requirements
1. DIMENSIONS	3.1.2.2	Rectangular Wire: a. Radii—see Table 1-13 b. Thickness and width tolerances—see Table 1-14 c. Dimensions and increase in thickness—see Table STW (MW 46-C) Square Wire: a. Radii—see Table SSQ (MW 46-C) b. Bare size, increase due to insulation—see Table SSQ (MW 46-C)
2. ADHERENCE AND FLEXIBILITY	3.2.2.2.2	No cracks visible in the film coating after 20 percent elongation. Examine with normal vision and without removal of glass fiber covering
3. ELONGATION	3.3.2.2	Not less than 32 percent for thicknesses of 0.049 inch (1.25 mm) and greater or 30 percent for thicknesses less than 0.049 inch (1.25 mm).
6. SPRINGBACK	3.6.2.1	Not greater than 5.5°
7. DIELECTRIC STRENGTH	3.7.2.2	Not less than value in 90 volts/mil (3543 v/mm) of the minimum thickness of the polyester glass fiber covering on one side [one-half the minimum calculated from Table STW (MW 46-C) or Table SSQ (MW 46-C)] plus the minimum breakdown given in Part 2 of the film-coated wire

Copyright National Electrical Manufacturers Association
Provided by IHS under license with NEMA
No reproduction or networking permitted without license from IHS
Not for Resale

SINGLE POLYESTER GLASS FIBER COVERED HEAVY FILM COATED RECTANGULAR AND SQUARE COPPER MAGNET WIRE THERMAL CLASS 155

Table STW (MW 46-C)

Maximum Increase in Thickness, Inches (mm), Due to Single Polyester glass fiber Covering, Heavy Film Coating and Treating Varnish, Rectangular Wire

Nominal Thickness		Nominal Width																										Nominal Thickness	
Millimeters		2.00	2.12	2.24	2.37	2.50	2.65	2.80	3.00	3.15	3.35	3.55	3.75	4.00	4.25	4.50	4.75	5.00	5.30	5.60	6.00	6.30	6.70	7.10	7.50	8.00	8.50	9.00	9.50	10.0	10.6	11.2	11.8	12.5		Millimeters
	Inches	0.079	† 0.083	0.088	† 0.093	0.098	† 0.104	0.110	† 0.118	0.124	† 0.132	0.140	† 0.148	0.157	† 0.167	0.177	† 0.187	0.197	† 0.209	0.220	† 0.236	0.248	† 0.264	0.280	† 0.295	0.315	† 0.335	0.354	† 0.374	0.394	† 0.417	0.441	† 0.465	0.492	Inches	
0.63	0.025																																		0.025	0.63
0.71	0.028																																		0.028	0.71
0.80	0.031																																		0.031	0.80
0.90	0.035																																		0.035	0.90
1.00	0.039	0.010" (0.254 mm)								0.011" (0.279 mm)								0.012" (0.305 mm)							0.013" (0.330 mm)									0.039	1.00
1.12	0.044																																		0.044	1.12
1.25	0.049																																		0.049	1.25
1.40	0.055																																		0.055	1.40
1.60	0.063																																		0.063	1.60
1.80	0.071																																		0.071	1.80
2.00	0.079																																		0.079	2.00
2.24	0.088																																		0.088	2.24
2.50	0.098																																		0.098	2.50
2.80	0.110																																		0.110	2.80
3.15	0.124																																		0.124	3.15
3.55	0.140																																		0.140	3.55
4.00	0.157																																		0.157	4.00
4.50	0.177																																		0.177	4.50
5.00	0.197																																		0.197	5.00
5.60	0.220																																		0.220	5.60

† R-40 Series Intermediate Numbers.

EXAMPLE—Preferred Size ..... 0.055 x 0.110 (R-20 x R-20)
Intermediate Size ... 0.055 x 0.118 (R-20 x R-40)

NOTE I—The maximum increase due to the film and fiber covering shall be permitted to be exceeded provided the overall dimension of the covered wire does not exceed the sum of the maximum thickness of the bare wire plus the maximum increase due to the heavy film coating and single polyester glass fiber covering.

NOTE II—The increase in thickness due to the heavy film coating shall be in accordance with the applicable section for film coated wire in Part 2.

NOTE III—The increase in thickness due to the single polyester glass fiber covering shall be determined by subtracting 0.005 inch (0.127 mm) (maximum thickness of film coating) from the maximum increase in thickness given in the table.

NOTE IV—The increase in width due to the polyester glass fiber covering shall be equal to or less than the maximum increase in thickness given in the table. Note I applies to the increase in width as well as the increase in thickness.

NOTE V—Because it is impossible to accurately separate the polyester glass fiber covering from the film coating, the total minimum increase in the thickness of the film coated polyester glass fiber covered rectangular wire shall be the sum of the minimum increase due to the film coating (as shown for film coated wire in Part 2) and the minimum increase due to the polyester glass fiber covering. The total minimum increase shall be not less than 70 percent of the maximum increase given in the table above, rounded to the nearest 0.001 inch (0.025 mm).

NOTE VI—For direct conversion of inches to millimeters, multiply inches by the factor 25.4 (exact). (This not approved as Authorized Engineering Information 3-11-1987.)

Copyright National Electrical Manufacturers Association
Provided by IHS under license with NEMA
No reproduction or networking permitted without license from IHS
Not for Resale

9009279 0001619 268

SINGLE POLYESTER GLASS FIBER COVERED, HEAVY FILM COATED, RECTANGULAR AND SQUARE COPPER MAGNET WIRE THERMAL CLASS 155

Table SSQ (MW 46-C)

Minimum Increase and Maximum Overall Dimensions, Inches (mm), Due to Single Polyester glass fiber Covering, Heavy Film Coating and Treating Varnish, Square Wire

Square AWG Size	Bare Wire Dimension						Nominal Radii *		Insulation				Square AWG Size
	Minimum		Nominal		Maximum				Minimum Increase in Dimension		Maximum Overall Dimension		
	inches	mm	inches	mm	inches	mm	inches	mm	inches	mm	inches	mm	
0	0.3219	8.176	0.3249	8.252	0.3279	8.329	0.040	1.02	0.009	0.229	0.341	8.661	0
1	0.2864	7.275	0.2893	7.348	0.2922	7.422	0.040	1.02	0.009	0.229	0.305	7.747	1
2	0.2550	6.477	0.2576	6.543	0.2602	6.609	0.040	1.02	0.008	0.203	0.272	6.909	2
3	0.2271	5.768	0.2294	5.827	0.2317	5.885	0.040	1.02	0.008	0.203	0.244	6.198	3
4	0.2023	5.138	0.2043	5.189	0.2063	5.240	0.040	1.02	0.008	0.203	0.219	5.563	4
5	0.1801	4.575	0.1819	4.620	0.1837	4.666	0.040	1.02	0.008	0.203	0.196	4.978	5
6	0.1604	4.074	0.1620	4.115	0.1636	4.155	0.032	0.81	0.008	0.203	0.175	4.445	6
7	0.1429	3.630	0.1443	3.665	0.1457	3.701	0.032	0.81	0.008	0.203	0.157	3.988	7
8	0.1272	3.231	0.1285	3.264	0.1298	3.297	0.032	0.81	0.008	0.203	0.141	3.581	8
9	0.1133	2.878	0.1144	2.906	0.1155	2.934	0.026	0.66	0.008	0.203	0.127	3.226	9
10	0.1009	2.563	0.1019	2.588	0.1029	2.614	0.026	0.66	0.007	0.178	0.113	2.870	10
11	0.0897	2.278	0.0907	2.304	0.0917	2.329	0.020	0.51	0.007	0.178	0.102	2.591	11
12	0.0798	2.027	0.0808	2.052	0.0818	2.078	0.020	0.51	0.007	0.178	0.092	2.337	12
13	0.0710	1.803	0.0720	1.829	0.0730	1.854	0.016	0.41	0.007	0.178	0.084	2.134	13
14	0.0631	1.603	0.0641	1.628	0.0651	1.654	0.016	0.41	0.007	0.178	0.076	1.930	14

* Radii tolerance is plus or minus 25 percent.

Authorized Engineering Information 3-11-1987.

Copyright National Electrical Manufacturers Association
Provided by IHS under license with NEMA
No reproduction or networking permitted without license from IHS
Not for Resale

9009279 0001620 T8T

DOUBLE POLYESTER GLASS FIBER COVERED BARE OR HEAVY FILM COATED RECTANGULAR AND SQUARE COPPER MAGNET WIRE THERMAL CLASS 155

INSULATING MATERIALS. The fiber covering shall consist of a combination of polyester and glass fibers. The glass fibers shall be electrical grade continuous filament glass yarn. The polyester fiber shall be a high grade yarn resulting from the linear polymerization of ethylene glycol and terephthalic acid. The maximum content by weight of polyester fiber in the yarn shall not exceed 50 percent. The underlying film coating shall have at least a Class 130 rating. The polyester glass fiber covering shall be wrapped firmly, closely, evenly, and continuously around the wire. Adjacent layers shall be wound in opposite directions. The polyester glass fiber shall be fused; when required it may be treated with an insulating varnish or compound to provide a tougher outer finish.

THERMAL CLASS. 155°C as defined in Part 3, para. 3.58.2.2.

GENERAL REQUIREMENTS. See Part 1.

Characteristics	Test Procedure, See Part 3, Paragraph	Requirements
1. DIMENSIONS	3.1.2.2	Rectangular Wire: a. Radii—see Table 1-13 b. Thickness and width tolerances—see Table 1-14 c. Dimensions and increase in thickness—see Table DTW-1 and DTW-2 (MW 46-C) Square Wire: a. Radii—see Table DSQ (MW 46-C) b. Bare size, increase due to insulation—see Table DSQ (MW 46-C)
2. ADHERENCE AND FLEXIBILITY	3.2.2.2.1	Not less than 75 volts/mil (2950 v/mm) of minimum thickness of the polyester glass fiber covering on one side [one-half the minimum calculated from Tables DTW-1, DTW-2 or DSQ (MW 46-C)] over the bare wire
	3.2.2.2.2	No cracks visible in the film coating after 20 percent elongation. Examine with normal vision and without removal of polyester glass-fiber covering
3. ELONGATION	3.3.2.2	Not less than 32 percent for thicknesses of 0.049 inch (1.25 mm) and greater or 30 percent for thicknesses less than 0.049 inch (1.25 mm).
6. SPRINGBACK	3.6.2.1	Not greater than 5° for Polyester Glass Fiber Covered Bare Not greater than 5.5° for Polyester Glass Fiber Covered Heavy Film Coated
7. DIELECTRIC STRENGTH	3.7.2.2	Not less than 90 volts/mil (3543 v/mm) of the minimum thickness of the polyester glass fiber covering on one side [one-half the minimum calculated from Table DTW-1 or DTW-2 or DSQ (MW 46-C)] plus the minimum breakdown given in Part 2 for the film coating when present

Copyright National Electrical Manufacturers Association
Provided by IHS under license with NEMA
No reproduction or networking permitted without license from IHS
Not for Resale

DOUBLE POLYESTER GLASS FIBER COVERED BARE OR HEAVY FILM COATED RECTANGULAR AND SQUARE COPPER MAGNET WIRE
THERMAL CLASS 155
Table DTW-1 (MW 46-C)

Maximum Increase in Thickness, Inches (mm), Due to Double Polyester glass fiber Covering and Treating Varnish, Rectangular Wire

Nominal Thickness		Nominal Width																								Nominal Thickness	
Millimeters	Inches	2.00	2.12	2.24	2.37	2.50	2.65	2.80	3.00	3.15	3.35	3.55	3.75	4.00	4.25	4.50	4.75	5.00	5.30	5.60	6.00	6.30	6.70	7.10	7.50	8.00	8.50	9.00	9.50	10.0	10.6	11.2	11.8	12.5	Inches	Millimeters
		0.079	†0.083	0.088	†0.093	0.098	†0.104	0.110	†0.118	0.124	†0.132	0.140	†0.148	0.157	†0.167	0.177	†0.187	0.197	†0.209	0.220	†0.236	0.248	†0.264	0.280	†0.295	0.315	†0.335	0.354	†0.374	0.394	†0.417	0.441	†0.465	0.492		
0.63	0.025																																		0.025	0.63
0.71	0.028																																		0.028	0.71
0.80	0.031																																		0.031	0.80
0.90	0.035																																		0.035	0.90
1.00	0.039																																		0.039	1.00
1.12	0.044																																		0.044	1.12
1.25	0.049																																		0.049	1.25
1.40	0.055																																		0.055	1.40
1.60	0.063																																		0.063	1.60
1.80	0.071																																		0.071	1.80
2.00	0.079																																		0.079	2.00
2.24	0.088																																		0.088	2.24
2.50	0.098																																		0.098	2.50
2.80	0.110																																		0.110	2.80
3.15	0.124																																		0.124	3.15
3.55	0.140																																		0.140	3.55
4.00	0.157																																		0.157	4.00
4.50	0.177																																		0.177	4.50
5.00	0.197																																		0.197	5.00
5.60	0.220																																		0.220	5.60

0.011" (0.279 mm) 0.012" (0.305 mm) 0.013" (0.330 mm) 0.014" (0.356 mm) 0.015" (0.381 mm) 0.016" (0.406 mm)

0.013" 0.015" 0.015"

† R-40 Series Intermediate Numbers.

EXAMPLE—Preferred Size ..... 0.055 x 0.110 (R-20 x R-20)
Intermediate Size ... 0.055 x 0.118 (R-20 x R-40)

NOTE I—The maximum increase due to the polyester glass fiber covering shall be permitted to be exceeded provided the overall dimension of the covered wire does not exceed the sum of the maximum thickness of the bare wire plus the maximum increase due to the polyester glass fiber covering.

NOTE II—The minimum increase due to the polyester glass fiber covering shall be not less than 70 percent of the maximum shown in the table above, rounded to the nearest 0.001 inch (0.025 mm).

NOTE III—The increase in width due to the polyester glass fiber covering shall be equal to or less than the maximum increase in thickness given in the table. Note I applies to the increase in width as well as to the increase in thickness.

NOTE: For direct conversion inches to millimeters, multiply inches by the factor 25.4 (exact). (This note approved as Authorized Engineering Information 3-11-1987.)

Copyright National Electrical Manufacturers Association
Provided by IHS under license with NEMA
No reproduction or networking permitted without license from IHS
Not for Resale

9009279 0001622 852

DOUBLE POLYESTER GLASS FIBER COVERED BARE OR HEAVY FILM COATED RECTANGULAR AND SQUARE COPPER MAGNET WIRE THERMAL CLASS 155

Table DTW-2 (MW 46-C)

Maximum Increase in Thickness, Inches (mm), Due to Heavy Film Coating, Double Polyester glass fiber Covering and Treating Varnish, Rectangular Wire

Nominal Thickness		Nominal Width																													Nominal Thickness	
Millimeters	Inches	2.00	2.12	2.24	2.37	2.50	2.65	2.80	3.00	3.15	3.35	3.55	3.75	4.00	4.25	4.50	4.75	5.00	5.30	5.60	6.00	6.30	6.70	7.10	7.50	8.00	8.50	9.00	9.50	10.0	10.6	11.2	11.8	12.5	Inches	Millimeters
		0.079	† 0.083	0.088	† 0.093	0.098	† 0.104	0.110	† 0.118	0.124	† 0.132	0.140	† 0.148	0.157	† 0.167	0.177	† 0.187	0.197	† 0.209	0.220	† 0.236	0.248	† 0.264	0.280	† 0.295	0.315	† 0.335	0.354	† 0.374	0.394	† 0.417	0.441	† 0.465	0.492		
0.63	0.025																																		0.025	0.63
0.71	0.028																																		0.028	0.71
0.80	0.031																																		0.031	0.80
0.90	0.035																																		0.035	0.90
1.00	0.039																																		0.039	1.00
1.12	0.044																																		0.044	1.12
1.25	0.049																																		0.049	1.25
1.40	0.055																																		0.055	1.40
1.60	0.063																																		0.063	1.60
1.80	0.071																																		0.071	1.80
2.00	0.079																																		0.079	2.00
2.24	0.088																																		0.088	2.24
2.50	0.098																																		0.098	2.50
2.80	0.110																																		0.110	2.80
3.15	0.124																																		0.124	3.15
3.55	0.140																																		0.140	3.55
4.00	0.157																																		0.157	4.00
4.50	0.177																																		0.177	4.50
5.00	0.197																																		0.197	5.00
5.60	0.220																																		0.220	5.60

0.016" (0.406 mm) 0.017" (0.432 mm) 0.018" (0.457 mm) 0.019" (0.483 mm) 0.020" (0.508 mm) 0.021" (0.533 mm)

0.018" 0.020" 0.020"

† R-40 Series Intermediate Numbers.

EXAMPLE—Preferred Size ..... 0.055 x 0.110 (R-20 x R-20)
Intermediate Size ... 0.055 x 0.118 (R-20 x R-40)

NOTE I—The maximum increase due to the polyester glass fiber covering shall be permitted to be exceeded provided the overall dimension of the covered wire does not exceed the sum of the maximum thickness plus the maximum increase given in Table DTW-2 (MW 46-C).

NOTE II—The increase in thickness due to the heavy film coating shall be in accordance with the applicable section for film coated wire in Part 2.

NOTE III—The minimum increase due to the polyester glass fiber covering shall be not less than 70 percent of the maximum shown in Table DTW-1 (MW 46-C), rounded to the nearest 0.001 inch (0.025 mm).

NOTE IV—The increase in width due to the polyester glass fiber covering shall be equal to or less than the maximum increase in thickness given in Table DTW-1 (MW 46-C). Note I applies to the increase in width as well as the increase in thickness.

NOTE V—Because it is impossible to accurately separate the polyester glass fiber covering from the film coating, the total minimum increase in the thickness of a film and fiber covered rectangular wire shall be the sum of the minimum increase due to the film coating (as shown for film coated wire in Part 2) and the minimum increase due to the polyester glass fiber covering. The total minimum increase shall be not less than 70 percent of the maximum increase given in Table DTW-1 (MW 46-C) plus the minimum for the film coated wire, rounded to the nearest 0.001 inch (0.025 mm).

NOTE: For direct conversion inches to millimeters, multiply inches by the factor 25.4 (exact). (This note approved as Authorized Engineering Information 3-11-1987.)

Copyright National Electrical Manufacturers Association
Provided by IHS under license with NEMA
No reproduction or networking permitted without license from IHS
Not for Resale

DOUBLE POLYESTER GLASS FIBER COVERED BARE OR HEAVY FILM COATED RECTANGULAR AND SQUARE COPPER MAGNET WIRE
THERMAL CLASS 155
Table DSQ (MW 46-C)

Minimum Increase and Maximum Overall Dimensions, Inches (mm), Due to Double Polyester glass fiber Covering and Treating Varnish, Square Wire

Square AWG Size	Base Wire Dimensions						Nominal Radii *		Bare Double-polyester-glass-fiber-covered Wire				Heavy-film-coated Double-polyester-glass-fiber-covered Wire			
	Minimum		Nominal		Maximum				Minimum Increase in Dimension		Maximum Overall Dimension		Minimum Increase in Dimension		Maximum Overall Dimension	
	inches	mm	inches	mm	inches	mm	inches	mm	inches	mm	inches	mm	inches	mm	inches	mm
0	0.3219	8.176	0.3249	8.252	0.3279	8.329	0.040	1.02	0.012	0.305	0.344	8.738	0.015	0.381	0.349	8.865
1	0.2864	7.275	0.2893	7.348	0.2922	7.422	0.040	1.02	0.012	0.305	0.308	7.823	0.015	0.381	0.313	7.950
2	0.2550	6.477	0.2576	6.543	0.2602	6.609	0.040	1.02	0.012	0.305	0.276	7.010	0.015	0.381	0.281	7.137
3	0.2271	5.768	0.2294	5.827	0.2317	5.885	0.040	1.02	0.012	0.305	0.248	6.299	0.015	0.381	0.253	6.426
4	0.2023	5.138	0.2043	5.189	0.2063	5.240	0.040	1.02	0.012	0.305	0.222	5.639	0.015	0.381	0.227	5.766
5	0.1801	4.575	0.1819	4.620	0.1837	4.666	0.040	1.02	0.011	0.279	0.199	5.055	0.014	0.356	0.204	5.182
6	0.1604	4.074	0.1620	4.115	0.1636	4.155	0.032	0.81	0.011	0.279	0.179	4.547	0.014	0.356	0.184	4.674
7	0.1429	3.630	0.1443	3.665	0.1457	3.701	0.032	0.81	0.010	0.254	0.160	4.064	0.013	0.330	0.165	4.191
8	0.1272	3.231	0.1285	3.264	0.1298	3.297	0.032	0.81	0.009	0.229	0.143	3.632	0.012	0.305	0.148	3.759
9	0.1133	2.878	0.1144	2.906	0.1155	2.934	0.026	0.66	0.009	0.229	0.129	3.277	0.012	0.305	0.134	3.404
10	0.1009	2.563	0.1019	2.588	0.1029	2.614	0.026	0.66	0.008	0.203	0.115	2.921	0.011	0.279	0.120	3.048
11	0.0897	2.278	0.0907	2.304	0.0917	2.329	0.020	0.51	0.008	0.203	0.103	2.616	0.011	0.279	0.108	2.743
12	0.0798	2.027	0.0808	2.052	0.0818	2.078	0.020	0.51	0.008	0.203	0.093	2.362	0.011	0.279	0.098	2.489
13	0.0710	1.803	0.0720	1.829	0.0730	1.854	0.016	0.41	0.008	0.203	0.084	2.134	0.011	0.279	0.089	2.261
14	0.0631	1.603	0.0641	1.628	0.0651	1.654	0.016	0.41	0.008	0.203	0.076	1.930	0.011	0.279	0.081	2.057

* Radii tolerance is plus or minus 25 percent.

NOTE: For direct conversion of inches to millimeters, multiply inches by the factor 25.4 (exact).

Authorized Engineering Information 3-11-1987.

Copyright National Electrical Manufacturers Association
Provided by IHS under license with NEMA
No reproduction or networking permitted without license from IHS
Not for Resale

9009279 0001624 625

SINGLE POLYESTER GLASS FIBER COVERED, SILICONE TREATED, BARE OR FILM COATED, ROUND COPPER MAGNET WIRE THERMAL CLASS 200

INSULATING MATERIALS. The fiber covering shall consist of a combination of polyester and glass fibers. The glass fibers shall be electrical grade continuous filament glass yarn. The polyester fiber shall be a high grade yarn resulting from the linear polymerization of ethylene glycol and terephthalic acid. The maximum content by weight of polyester fiber in the yarn shall not exceed 50 percent. If an underlying film coating is used, it shall have at least a Class 180 rating. The polyester glass fiber covering shall be wrapped firmly, closely, evenly, and continuously around the wire. The polyester glass fiber covering shall be fused and shall be treated with a modified silicone insulating varnish or silicone compound to provide a tougher outer finish. If a tracer is used, one or more ends of the glass yarn in the outer layer shall be black or green and the dye or pigment used for this purpose shall be sufficiently stable so as to retain its color identity after the silicone treatment or subsequent baking.

THERMAL CLASS. 200°C as defined in Part 3, para. 3.58.1.2.

GENERAL REQUIREMENTS. See Part 1.

Characteristics	Test Procedure, See Part 3, Paragraph	Requirements
1. DIMENSIONS	3.1.1.2	See Table S (MW 47-C)
2. ADHERENCE AND FLEXIBILITY	3.2.1.2.1	Covering shall not open sufficiently to expose the bare or underlying film-coated wire after bending 9 AWG and heavier wire on a 10d mandrel and 10 through 30 AWG wire on a 5d mandrel
	3.2.1.2.2	There shall be no loosening, fraying or loss of adherence of the covering except at the point of rupture
3. ELONGATION	3.3.1.2.1	Not less than the following:
6. SPRINGBACK	3.6.2.1	Not greater than 5° for Glass Fiber Covered Bare Not greater than 5.5° for Glass Fiber Covered Film Coated
7. DIELECTRIC STRENGTH	3.7.1.2.1	Not less than the following:

AWG Size	Minimum Elongation Percent
4–8	30.0
9–15	20.0
16–21	15.0
22–30	10.0

AWG Size	Diameter of Mandrel, inches	Diameter of Mandrel, mm	Minimum Breakdown, Volts*
4–9	...	...	150
10–23	1.00	25.4	360
24–30	0.25	6.3	225

*For polyester glass fiber covered wire having an underlying film coating, add the minimum breakdown voltage given in Part 2 for the film-coated wire

Copyright National Electrical Manufacturers Association
Provided by IHS under license with NEMA
No reproduction or networking permitted without license from IHS
Not for Resale

SINGLE POLYESTER GLASS FIBER COVERED, SILICONE TREATED, BARE OR FILM COATED ROUND COPPER MAGNET WIRE THERMAL CLASS 200

Table S (MW 47-C)

AWG Size	Bare Wire Diameter, Inches†			Minimum Increase in Single Polyester-glass-fiber Covering, Inches†	Maximum Overall Diameter, Inches†			AWG Size
	Minimum	Nominal	Maximum		Bare	Single Film	Heavy Film	
4	0.2023	0.2043	0.2053 *	0.0040	.....	.....	0.2158	4
5	0.1801	0.1819	0.1828 *	0.0040	.....	.....	0.1932	5
6	0.1604	0.1620	0.1628 *	0.0040	.....	.....	0.1731	6
7	0.1429	0.1443	0.1450 *	0.0040	.....	.....	0.1551	7
8	0.1272	0.1285	0.1292 *	0.0040	.....	.....	0.1392	8
9	0.1133	0.1144	0.1150 *	0.0040	.....	.....	0.1249	9
10	0.1009	0.1019	0.1024 *	0.0035	0.1079	.....	0.1111	10
11	0.0898	0.0907	0.0912 *	0.0035	0.0966	.....	0.0998	11
12	0.0800	0.0808	0.0812 *	0.0035	0.0866	.....	0.0897	12
13	0.0713	0.0720	0.0724 *	0.0035	0.0777	.....	0.0807	13
14	0.0635	0.0641	0.0644 *	0.0035	0.0697	0.0716	0.0732	14
15	0.0565	0.0571	0.0574 *	0.0035	0.0627	0.0644	0.0659	15
16	0.0503	0.0508	0.0511 *	0.0035	0.0563	0.0581	0.0595	16
17	0.0448	0.0453	0.0455 *	0.0035	0.0508	0.0525	0.0538	17
18	0.0399	0.0403	0.0405 *	0.0035	0.0457	0.0474	0.0487	18
19	0.0355	0.0359	0.0361 *	0.0035	0.0413	0.0429	0.0441	19
20	0.0317	0.0320	0.0322 *	0.0035	0.0373	0.0389	0.0401	20
21	0.0282	0.0285	0.0286 *	0.0035	0.0338	0.0353	0.0364	21
22	0.0250	0.0253	0.0254 *	0.0035	0.0306	0.0320	0.0331	22
23	0.0224	0.0226	0.0227 *	0.0035	0.0278	0.0293	0.0303	23
24	0.0199	0.0201	0.0202 *	0.0025	0.0253	0.0267	0.0277	24
25	0.0177	0.0179	0.0180 *	0.0025	0.0231	0.0244	0.0253	25
26	0.0157	0.0159	0.0160 *	0.0025	0.0211	0.0223	0.0232	26
27	0.0141	0.0142	0.0143	0.0025	0.0193	0.0206	0.0214	27
28	0.0125	0.0126	0.0127	0.0025	0.0177	0.0190	0.0197	28
29	0.0112	0.0113	0.0114	0.0025	0.0164	0.0176	0.0183	29
30	0.0099	0.0100	0.0101	0.0025	0.0151	0.0162	0.0169	30

*This maximum bare wire diameter shall be permitted to be exceeded; see 1.4.9.1.
†For metric equivalent, see 1.5.
NOTE: For direct conversion inches to millimeters, multiply inches by the factor 25.4 (exact). (This note approved as Authorized Engineering Information 3-11-1987.)

Copyright National Electrical Manufacturers Association
Provided by IHS under license with NEMA
No reproduction or networking permitted without license from IHS
Not for Resale

9009279 0001626 4T8

DOUBLE POLYESTER GLASS FIBER COVERED, SILICONE TREATED, BARE OR FILM COATED, ROUND COPPER MAGNET WIRE THERMAL CLASS 200

INSULATING MATERIALS. The fiber covering shall consist of a combination of polyester and glass fibers. The glass fibers shall be electrical grade continuous filament glass yarn. The polyester fiber shall be a high grade yarn resulting from the linear polymerization of ethylene glycol and terephthalic acid. The maximum content by weight of polyester fiber in the yarn shall not exceed 50 percent. If an underlying film coating is used, it shall have at least a Class 180 rating. The polyester glass fiber covering shall be wrapped firmly, closely, evenly, and continuously around the wire. Adjacent layers shall be wound in opposite directions. The polyester glass fiber covering shall be fused and shall be treated with a modified silicone insulating varnish or silicone compound to provide a tougher outer finish. If a tracer is used, one or more ends of the glass yarn in the outer layer shall be black or green and the dye or pigment used for this purpose shall be sufficiently stable so as to retain its color identity after the silicone treatment or subsequent baking. When specified, either layer may consist of 100 percent glass fibers.

THERMAL CLASS. 200°C as defined in Part 3, para. 3.58.1.2.

GENERAL REQUIREMENTS. See Part 1.

Characteristics	Test Procedure, See Part 3, Paragraph	Requirements
1. DIMENSIONS	3.1.1.2	See Table D (MW 47-C)
2. ADHERENCE AND FLEXIBILITY	3.2.1.2.1	Covering shall not open sufficiently to expose the bare or underlying film-coated wire after bending 9 AWG and heavier wire on a 10d mandrel and 10 through 30 AWG wire on a 5d mandrel
	3.2.1.2.2	There shall be no loosening, fraying or loss of adherence of the covering except at the point of rupture
3. ELONGATION	3.3.1.2.1	Not less than the following:
6. SPRINGBACK	3.6.2.1	Not greater than 5° for Glass Fiber Covered Bare Not greater than 5.5° for Glass Fiber Covered Film Coated
7. DIELECTRIC STRENGTH	3.7.1.2.1	Not less than the following:

AWG Size	Minimum Elongation, Percent
4–8	30.0
9–15	20.0
16–21	15.0
22–30	10.0

AWG Size	Diameter of Mandrel, inches	Diameter of Mandrel, mm	Minimum Breakdown, Volts*
4–9	...	...	270
10–23	1.00	25.4	540
24–30	0.25	6.3	400

*For polyester glass fiber covered wire having an underlying film coating, add the minimum breakdown voltage given in Part 2 for the film-coated wire

Copyright National Electrical Manufacturers Association
Provided by IHS under license with NEMA
No reproduction or networking permitted without license from IHS
Not for Resale

9009279 0001627 334

DOUBLE POLYESTER GLASS FIBER COVERED, SILICONE TREATED, BARE OR FILM COATED ROUND COPPER MAGNET WIRE THERMAL CLASS 200

Table D (MW 47-C)

AWG Size	Bare Wire Diameter, Inches†			Minimum Increase in Double Polyester-glass-fiber Covering, Inches†	Maximum Overall Diameter, Inches†			AWG Size
	Minimum	Nominal	Maximum		Bare	Single Film	Heavy Film	
4	0.2023	0.2043	0.2053*	0.0060	0.2153	.....	0.2188	4
5	0.1801	0.1819	0.1828*	0.0060	0.1927	.....	0.1962	5
6	0.1604	0.1620	0.1628*	0.0060	0.1726	.....	0.1761	6
7	0.1429	0.1443	0.1450*	0.0060	0.1547	.....	0.1581	7
8	0.1272	0.1285	0.1292*	0.0060	0.1388	.....	0.1422	8
9	0.1133	0.1144	0.1150*	0.0060	0.1245	.....	0.1279	9
10	0.1009	0.1019	0.1024*	0.0055	0.1109	.....	0.1141	10
11	0.0898	0.0907	0.0912*	0.0055	0.0996	.....	0.1028	11
12	0.0800	0.0808	0.0812*	0.0055	0.0896	.....	0.0927	12
13	0.0713	0.0720	0.0724*	0.0055	0.0807	.....	0.0837	13
14	0.0635	0.0641	0.0644*	0.0055	0.0727	0.0746	0.0762	14
15	0.0565	0.0571	0.0574*	0.0055	0.0657	0.0674	0.0689	15
16	0.0503	0.0508	0.0511*	0.0055	0.0593	0.0611	0.0625	16
17	0.0448	0.0453	0.0455*	0.0055	0.0538	0.0555	0.0568	17
18	0.0399	0.0403	0.0405*	0.0055	0.0487	0.0504	0.0517	18
19	0.0355	0.0359	0.0361*	0.0055	0.0443	0.0459	0.0471	19
20	0.0317	0.0320	0.0322*	0.0055	0.0403	0.0419	0.0431	20
21	0.0282	0.0285	0.0286*	0.0055	0.0368	0.0383	0.0394	21
22	0.0250	0.0253	0.0254*	0.0055	0.0336	0.0350	0.0361	22
23	0.0224	0.0226	0.0227*	0.0055	0.0308	0.0323	0.0333	23
24	0.0199	0.0201	0.0202*	0.0045	0.0268	0.0282	0.0292	24
25	0.0177	0.0179	0.0180*	0.0045	0.0246	0.0259	0.0268	25
26	0.0157	0.0159	0.0160*	0.0045	0.0226	0.0238	0.0247	26
27	0.0141	0.0142	0.0143	0.0045	0.0208	0.0221	0.0229	27
28	0.0125	0.0126	0.0127	0.0045	0.0192	0.0205	0.0212	28
29	0.0112	0.0113	0.0114	0.0045	0.0179	0.0191	0.0198	29
30	0.0099	0.0100	0.0101	0.0045	0.0166	0.0177	0.0184	30

*This maximum bare wire diameter shall be permitted to be exceeded; see 1.4.9.1.
†For metric equivalent, see 1.5.
NOTE: For direct conversion inches to millimeters, multiply inches by the factor 25.4 (exact). (This note approved as Authorized Engineering Information 3-11-1987.)

Copyright National Electrical Manufacturers Association
Provided by IHS under license with NEMA
No reproduction or networking permitted without license from IHS
Not for Resale

9009279 0001628 270

SINGLE POLYESTER GLASS FIBER COVERED, SILICONE TREATED, HEAVY FILM COATED RECTANGULAR AND SQUARE COPPER MAGNET WIRE THERMAL CLASS 200

INSULATING MATERIALS. The fiber covering shall consist of a combination of polyester and glass fibers. The glass fibers shall be electrical grade continuous filament glass yarn. The polyester fiber shall be a high grade yarn resulting from the linear polymerization of ethylene glycol and terephthalic acid. The maximum content by weight of polyester fiber in the yarn shall not exceed 50 percent. The underlying film coating shall have at least a Class 180 rating. The polyester glass fiber covering shall be wrapped firmly, closely, evenly, and continuously around the wire. The polyester glass fiber shall be fused and shall be treated with a modified silicone insulating varnish or silicone compound to provide a tougher outer finish. If a tracer is used, one or more ends of the glass yarn in the outer layer shall be black or green and the dye or pigment used for this purpose shall be sufficiently stable so as to retain its color identity after the silicone treatment or subsequent baking.

THERMAL CLASS. 200°C as defined in Part 3, para. 3.58.1.2.

GENERAL REQUIREMENTS. See Part 1.

Characteristics	Test Procedure, See Part 3, Paragraph	Requirements
1. DIMENSIONS	3.1.2.2	Rectangular Wire: a. Radii—see Table 1-13 b. Thickness and width tolerances—see Table 1-14 c. Dimensions and increase in thickness—see Table STW (MW 48-C) Square Wire: a. Radii—see Table SSQ (MW 48-C) b. Bare size, increase due to insulation—see Table SSQ (MW 48-C)
2. ADHERENCE AND FLEXIBILITY	3.2.2.2.2	No cracks visible in the film coating after 20 percent elongation. Examine with normal vision and without removal of glass fiber covering
3. ELONGATION	3.3.2.2	Not less than 32 percent for thicknesses of 0.049 inch (1.25 mm) and greater or 30 percent for thicknesses less than 0.049 inch (1.25 mm).
6. SPRINGBACK	3.6.2.1	Not less than 5.5°
7. DIELECTRIC STRENGTH	3.7.2.2	Not less than value in 90 volts/mil (3543 v/mm) of the minimum thickness of the polyester glass fiber covering on one side [one-half the minimum calculated from Table STW or Table SSQ (MW 48-C)] plus the minimum breakdown given in Part 2 of the film-coated wire

Copyright National Electrical Manufacturers Association
Provided by IHS under license with NEMA
No reproduction or networking permitted without license from IHS
Not for Resale

SINGLE POLYESTER GLASS FIBER COVERED, SILICONE TREATED, HEAVY FILM COATED RECTANGULAR AND SQUARE COPPER MAGNET WIRE THERMAL CLASS 200

Table STW (MW 48-C)

Maximum Increase in Thickness, Inches (mm), Due to Single Polyester glass fiber Covering, Heavy Film Coating and Silicone Varnish, Rectangular Wire

Nominal Thickness		Nominal Width																													Nominal Thickness	
Millimeters		2.00	2.12	2.24	2.37	2.50	2.65	2.80	3.00	3.15	3.35	3.55	3.75	4.00	4.25	4.50	4.75	5.00	5.30	5.60	6.00	6.30	6.70	7.10	7.50	8.00	8.50	9.00	9.50	10.0	10.6	11.2	11.8	12.5		Millimeters
	Inches	0.079	†0.083	0.088	†0.093	0.098	†0.104	0.110	†0.118	0.124	†0.132	0.140	†0.148	0.157	†0.167	0.177	†0.187	0.197	†0.209	0.220	†0.236	0.248	†0.264	0.280	†0.295	0.315	†0.335	0.354	†0.374	0.394	†0.417	0.441	†0.465	0.492	Inches	
0.63	0.025																																		0.025	0.63
0.71	0.028																																		0.028	0.71
0.80	0.031																																		0.031	0.80
0.90	0.035																																		0.035	0.90
1.00	0.039	0.010" (0.254 mm)									0.011" (0.279 mm)								0.012" (0.305 mm)							0.013" (0.330 mm)									0.039	1.00
1.12	0.044																																		0.044	1.12
1.25	0.049																																		0.049	1.25
1.40	0.055																																		0.055	1.40
1.60	0.063																																		0.063	1.60
1.80	0.071																																		0.071	1.80
2.00	0.079																																		0.079	2.00
2.24	0.088																																		0.088	2.24
2.50	0.098																																		0.098	2.50
2.80	0.110																																		0.110	2.80
3.15	0.124																																		0.124	3.15
3.55	0.140																																		0.140	3.55
4.00	0.157																																		0.157	4.00
4.50	0.177																																		0.177	4.50
5.00	0.197																																		0.197	5.00
5.60	0.220																																		0.220	5.60

† R-40 Series Intermediate Numbers.

EXAMPLE—Preferred Size ..... 0.055 x 0.110 (R-20 x R-20)
Intermediate Size ... 0.055 x 0.118 (R-20 x R-40)

NOTE I—The maximum increase due to the polyester glass fiber covering shall be permitted to be exceeded provided the overall dimension of the covered wire does not exceed the sum of the maximum thickness of the bare wire plus the maximum increase due to the polyester glass fiber covering.

NOTE II—The increase in thickness due to the heavy film coating shall be in accordance with the applicable section for film-coated wire in Part 2.

NOTE III—The increase in thickness due to the single polyester-glass-fiber covering shall be determined by subtracting 0.005 inch (0.127 mm) (maximum thickness of film coating) from the maximum increase in thickness given in the table.

NOTE IV—The increase in width due to the polyester-glass-fiber covering shall be equal to or less than the maximum increase in thickness given in the table. Note I applies to the increase in width as well as the increase in thickness.

NOTE V—Because it is impossible to accurately separate the polyester-glass-fiber covering from the film coating, the total minimum increase in the thickness of the film-coated polyester-glass-fiber-covered rectangular wire shall be the sum of the minimum increase due to the film coating (as shown for film-coated wire in Part 2) and the minimum increase due to the polyester-glass-fiber covering. The total minimum increase shall be not less than 70 percent of the maximum increase given in the table above, rounded to the nearest 0.001 inch (0.025 mm).

NOTE VI—For direct conversion of inches to millimeters, multiply inches by the factor 25.4 (exact). (This note approved as Authorized Engineering Information 3-11-1987.)

Copyright National Electrical Manufacturers Association
Provided by IHS under license with NEMA
No reproduction or networking permitted without license from IHS
Not for Resale

9009279 0001630 929

SINGLE POLYESTER GLASS FIBER COVERED, SILICONE TREATED, HEAVY FILM COATED RECTANGULAR AND SQUARE COPPER MAGNET WIRE THERMAL CLASS 200

Table SSQ (MW 48-C)

Minimum Increase and Maximum Overall Dimensions, Inches (mm), Due to Single Polyester glass fiber Covering, Heavy Film Coating and Silicone Varnish, Square Wire

Square AWG Size	Bare Wire Dimension						Nominal Radii *		Insulation				Square AWG Size
	Minimum		Nominal		Maximum				Minimum Increase in Dimension		Maximum Overall Dimension		
	inches	mm	inches	mm	inches	mm	inches	mm	inches	mm	inches	mm	
0	0.3219	8.176	0.3249	8.252	0.3279	8.329	0.040	1.02	0.009	0.229	0.341	8.661	0
1	0.2864	7.275	0.2893	7.348	0.2922	7.422	0.040	1.02	0.009	0.229	0.305	7.747	1
2	0.2550	6.477	0.2576	6.543	0.2602	6.609	0.040	1.02	0.008	0.203	0.272	6.909	2
3	0.2271	5.768	0.2294	5.827	0.2317	5.885	0.040	1.02	0.008	0.203	0.244	6.198	3
4	0.2023	5.138	0.2043	5.189	0.2063	5.240	0.040	1.02	0.008	0.203	0.219	5.563	4
5	0.1801	4.575	0.1819	4.620	0.1837	4.666	0.040	1.02	0.008	0.203	0.196	4.978	5
6	0.1604	4.074	0.1620	4.115	0.1636	4.155	0.032	0.81	0.008	0.203	0.175	4.445	6
7	0.1429	3.630	0.1443	3.665	0.1457	3.701	0.032	0.81	0.008	0.203	0.157	3.988	7
8	0.1272	3.231	0.1285	3.264	0.1298	3.297	0.032	0.81	0.008	0.203	0.141	3.581	8
9	0.1133	2.878	0.1144	2.906	0.1155	2.934	0.026	0.66	0.008	0.203	0.127	3.226	9
10	0.1009	2.563	0.1019	2.588	0.1029	2.614	0.026	0.66	0.007	0.178	0.113	2.870	10
11	0.0897	2.278	0.0907	2.304	0.0917	2.329	0.020	0.51	0.007	0.178	0.102	2.591	11
12	0.0798	2.027	0.0808	2.052	0.0818	2.078	0.020	0.51	0.007	0.178	0.092	2.337	12
13	0.0710	1.803	0.0720	1.829	0.0730	1.854	0.016	0.41	0.007	0.178	0.084	2.134	13
14	0.0631	1.603	0.0641	1.628	0.0651	1.654	0.016	0.41	0.007	0.178	0.076	1.930	14

* Radii tolerance is plus or minus 25 per cent.

NOTE: For direct conversion inches to millimeters, multiply inches by the factor 25.4 (exact). (This note approved as Authorized Engineering Information 3-11-1987.)

Copyright National Electrical Manufacturers Association
Provided by IHS under license with NEMA
No reproduction or networking permitted without license from IHS
Not for Resale

9009279 0001631 865

DOUBLE POLYESTER GLASS FIBER COVERED, SILICONE TREATED, BARE OR HEAVY FILM COATED RECTANGULAR AND SQUARE COPPER MAGNET WIRE THERMAL CLASS 200

INSULATING MATERIALS. The fiber covering shall consist of a combination of polyester and glass fibers. The glass fibers shall be electrical grade continuous filament glass yarn. The polyester fiber shall be a high grade yarn resulting from the linear polymerization of ethylene glycol and terephthalic acid. The maximum content by weight of polyester fiber in the yarn shall not exceed 50 percent. If an underlying film coating is used, it shall have at least a Class 180 rating. The polyester glass fiber covering shall be wrapped firmly, closely, evenly, and continuously around the wire. Adjacent layers shall be wound in opposite directions. The polyester glass fiber covering shall be fused and shall be treated with a modified silicone insulating varnish or silicone compound to provide a tougher outer finish. If a tracer is used, one or more ends of the glass yarn in the outer layer shall be black or green and the dye or pigment used for this purpose shall be sufficiently stable so as to retain its color identity after the silicone treatment or subsequent baking. When specified, either layer may consist of 100 percent glass fibers.

THERMAL CLASS. 200°C as defined in Part 3, para. 3.58.2.2.

GENERAL REQUIREMENTS. See Part 1.

Characteristics	Test Procedure, See Part 3, Paragraph	Requirements
1. DIMENSIONS	3.1.2.2	Rectangular Wire: a. Radii—see Table 1-13 b. Thickness and width tolerances—see Table 1-14 c. Dimensions and increase in thickness—see Table DTW-1 and DTW-2 (MW 48-C) Square Wire: a. Radii—see Table DSQ (MW 48-C) b. Bare size, increase due to insulation—see Table DSQ (MW 48-C)
2. ADHERENCE AND FLEXIBILITY	3.2.2.2.1	Not less than 75 volts/mil (2950 v/mm) of minimum thickness of the polyester glass fiber covering on one side [one-half the minimum calculated from Tables DTW-1, DTW-2 or DSQ (MW 48-C)] over bare wire
	3.2.2.2.2	No cracks visible in the film coating after 20 percent elongation. Examine with normal vision and without removal of glass fiber covering
3. ELONGATION	3.3.2.2	Not less than 32 percent for thicknesses of 0.049 inch (1.25 mm) and greater or 30 percent for thicknesses less than 0.049 inch (1.25 mm).
6. SPRINGBACK	3.6.2.1	Not greater than 5° for Polyester Glass Fiber Covered Not greater than 5.5° for Polyester Glass Fiber Covered Heavy Film Coated
7. DIELECTRIC STRENGTH	3.7.2.2	Not less than 90 volts/mil (3543 v/mm) of the minimum thickness of the polyester glass fiber covering on one side [one-half the minimum calculated from Table DTW-1, DTW-2 or DSQ (MW 48-C)] plus the minimum breakdown given in Part 2 for the film coating when present

Copyright National Electrical Manufacturers Association
Provided by IHS under license with NEMA
No reproduction or networking permitted without license from IHS
Not for Resale

DOUBLE POLYESTER GLASS FIBER COVERED, SILICONE TREATED, BARE OR HEAVY FILM COATED, RECTANGULAR AND SQUARE COPPER MAGNET WIRE THERMAL CLASS 200

Table DTW-1 (MW 48-C)

Maximum Increase in Thickness, Inches (mm), Due to Double Polyester glass fiber Covering and Silicone Varnish, Rectangular Wire

Nominal Thickness		Nominal Width																													Nominal Thickness	
Millimeters		2.00	2.12	2.24	2.37	2.50	2.65	2.80	3.00	3.15	3.35	3.55	3.75	4.00	4.25	4.50	4.75	5.00	5.30	5.60	6.00	6.30	6.70	7.10	7.50	8.00	8.50	9.00	9.50	10.0	10.6	11.2	11.8	12.5		Millimeters
	Inches	0.079	† 0.083	0.088	† 0.093	0.098	† 0.104	0.110	† 0.118	0.124	† 0.132	0.140	† 0.148	0.157	† 0.167	0.177	† 0.187	0.197	† 0.209	0.220	† 0.236	0.248	† 0.264	0.280	† 0.295	0.315	† 0.335	0.354	† 0.374	0.394	† 0.417	0.441	† 0.465	0.492	Inches	
0.63	0.025																																		0.025	0.63
0.71	0.028																																		0.028	0.71
0.80	0.031																																		0.031	0.80
0.90	0.035																																		0.035	0.90
1.00	0.039	0.011" (0.279 mm)								0.012" (0.305 mm)				0.013" (0.330 mm)				0.014" (0.356 mm)				0.015" (0.381 mm)							0.016" (0.406 mm)					0.039	1.00
1.12	0.044																																		0.044	1.12
1.25	0.049																																		0.049	1.25
1.40	0.055																																		0.055	1.40
1.60	0.063																																		0.063	1.60
1.80	0.071																																		0.071	1.80
2.00	0.079																																		0.079	2.00
2.24	0.088																																		0.088	2.24
2.50	0.098																																		0.098	2.50
2.80	0.110									0.013"											0.015"														0.110	2.80
3.15	0.124																																		0.124	3.15
3.55	0.140																																		0.140	3.55
4.00	0.157																																		0.157	4.00
4.50	0.177																0.015"																		0.177	4.50
5.00	0.197																																		0.197	5.00
5.60	0.220																																		0.220	5.60

† R-40 Series Intermediate Numbers.

EXAMPLE—Preferred Size ..... 0.055 x 0.110 (R-20 x R-20)
Intermediate Size ... 0.055 x 0.118 (R-20 x R-40)

NOTE I—The maximum increase due to the polyester glass fiber covering shall be permitted to be exceeded provided the overall dimension of the covered wire does not exceed the sum of the maximum thickness of the bare or film coated wire plus the maximum increase due to the polyester glass fiber covering.

NOTE II—The minimum increase due to the polyester glass fiber covering shall be not less than 70 percent of the maximum shown in the table above, rounded to the nearest 0.001 inch (0.025 mm).

NOTE III—The increase in width due to the polyester glass fiber covering shall be equal to or less than the maximum increase in thickness given in the table. Note I applies to the increase in width as well as to the increase in thickness.

NOTE IV—For direct conversion of inches to millimeters, multiply inches by the factor 25.4 (exact).

(This note approved as Authorized Engineering Information 3-11-1987.)

Copyright National Electrical Manufacturers Association
Provided by IHS under license with NEMA
No reproduction or networking permitted without license from IHS
Not for Resale

DOUBLE POLYESTER GLASS FIBER COVERED, SILICONE TREATED, BARE OR HEAVY FILM COATED RECTANGULAR AND SQUARE COPPER MAGNET WIRE THERMAL CLASS 200

Table DTW-2 (MW 48-C)

Maximum Increase in Thickness, Inches (mm), Due to Heavy Film Coating, Double Polyester glass fiber Covering and Silicone Varnish, Rectangular Wire

Nominal Thickness Millimeters	Nominal Thickness Inches	Nominal Width: 2.00	† 2.12	2.24	† 2.37	2.50	† 2.65	2.80	† 3.00	3.15	† 3.35	3.55	† 3.75	4.00	† 4.25	4.50	† 4.75	5.00	† 5.30	5.60	† 6.00	6.30	† 6.70	7.10	† 7.50	8.00	† 8.50	9.00	† 9.50	10.0	† 10.6	11.2	† 11.8	12.5
		0.079	† 0.083	0.088	† 0.093	0.098	† 0.104	0.110	† 0.118	0.124	† 0.132	0.140	† 0.148	0.157	† 0.167	0.177	† 0.187	0.197	† 0.209	0.220	† 0.236	0.248	† 0.264	0.280	† 0.295	0.315	† 0.335	0.354	† 0.374	0.394	† 0.417	0.441	† 0.465	0.492
0.63	0.025																																
0.71	0.028																																
0.80	0.031																																
0.90	0.035																																
1.00	0.039																																
1.12	0.044																																
1.25	0.049																																
1.40	0.055																																
1.60	0.063																																
1.80	0.071																																
2.00	0.079																																
2.24	0.088																																
2.50	0.098																																
2.80	0.110																																
3.15	0.124																																
3.55	0.140																																
4.00	0.157																																
4.50	0.177																																
5.00	0.197																																
5.60	0.220																																

0.016" (0.406 mm) 0.017" (0.432 mm) 0.018" (0.457 mm) 0.019" (0.483 mm) 0.020" (0.508 mm) 0.021" (0.533 mm)

0.018" 0.020" 0.020"

Nominal Thickness Inches	Nominal Thickness Millimeters
0.025	0.63
0.028	0.71
0.031	0.80
0.035	0.90
0.039	1.00
0.044	1.12
0.049	1.25
0.055	1.40
0.063	1.60
0.071	1.80
0.079	2.00
0.088	2.24
0.098	2.50
0.110	2.80
0.124	3.15
0.140	3.55
0.157	4.00
0.177	4.50
0.197	5.00
0.220	5.60

† R-40 Series Intermediate Numbers.

EXAMPLE—Preferred Size ..... 0.055 x 0.110 (R-20 x R-20)
Intermediate Size ... 0.055 x 0.118 (R-20 x R-40)

NOTE I—The maximum increase due to the polyester glass fiber covering shall be permitted to be exceeded provided the overall dimension of the covered wire does not exceed the sum of the maximum thickness of the bare or film coated wire plus the maximum increase given in Table DTW-2 (MW 48-C).

NOTE II—The increase in thickness due to the heavy film coating shall be in accordance with the applicable section for film coated wire in Part 2.

NOTE III—The minimum increase due to the polyester glass fiber covering shall be not less than 70 percent of the maximum shown in Table DTW-1 (MW 48-C), rounded to the nearest 0.001 inch (0.025 mm).

NOTE IV—The increase in width due to the polyester glass fiber covering shall be equal to or less than the maximum increase in thickness given in Table DTW-1 (MW 48-C). Note I applies to the increase in width as well as the increase in thickness.

NOTE V—Because it is impossible to accurately separate the polyester glass fiber covering from the film coating, the total minimum increase in the thickness of a film and fiber covered rectangular wire shall be the sum of the minimum increase due to the film coating (as shown for film coated wire in Part 2) and the minimum increase due to the polyester glass fiber covering. The total minimum increase shall be not less than 70 percent of the maximum increase given in Table DTW-1 (MW 48-C) plus the minimum for the film coated wire, rounded to the nearest 0.001 inch (0.025 mm).

NOTE VI—For direct conversion of inches to millimeters, multiply inches by the factor 25.4 (exact). (This not approved as Authorized Engineering Information 3-11-1987.)

Copyright National Electrical Manufacturers Association
Provided by IHS under license with NEMA
No reproduction or networking permitted without license from IHS
Not for Resale

9009279 0001634 574

DOUBLE POLYESTER GLASS FIBER COVERED SILICONE-TREATED BARE OR HEAVY FILM COATED RECTANGULAR AND SQUARE COPPER MAGNET WIRE
THERMAL CLASS 200
Table DSQ (MW 48-C)

Minimum Increase and Maximum Overall Dimensions, Inches (mm), Due to Double Polyester Glass Fiber Covering and Silicone Varnish, Square Wire

Square AWG Size	Bare Wire Dimensions						Nominal Radii *		Bare Double-polyester-glass-fiber-covered Wire				Heavy-film-coated Double-polyester-glass-fiber-covered Wire			
	Minimum		Nominal		Maximum				Minimum Increase in Dimension		Maximum Overall Dimension		Minimum Increase in Dimension		Maximum Overall Dimension	
	inches	mm	inches	mm	inches	mm	inches	mm	inches	mm	inches	mm	inches	mm	inches	mm
0	0.3219	8.176	0.3249	8.252	0.3279	8.329	0.040	1.02	0.012	0.305	0.344	8.738	0.015	0.381	0.349	8.865
1	0.2864	7.275	0.2893	7.348	0.2922	7.422	0.040	1.02	0.012	0.305	0.308	7.823	0.015	0.381	0.313	7.950
2	0.2550	6.477	0.2576	6.543	0.2602	6.609	0.040	1.02	0.012	0.305	0.276	7.010	0.015	0.381	0.281	7.137
3	0.2271	5.768	0.2294	5.827	0.2317	5.885	0.040	1.02	0.012	0.305	0.248	6.299	0.015	0.381	0.253	6.426
4	0.2023	5.138	0.2043	5.189	0.2063	5.240	0.040	1.02	0.012	0.305	0.222	5.639	0.015	0.381	0.227	5.766
5	0.1801	4.575	0.1819	4.620	0.1837	4.666	0.040	1.02	0.011	0.279	0.199	5.055	0.014	0.356	0.204	5.182
6	0.1604	4.074	0.1620	4.115	0.1636	4.155	0.032	0.81	0.011	0.279	0.179	4.547	0.014	0.356	0.184	4.674
7	0.1429	3.630	0.1443	3.665	0.1457	3.701	0.032	0.81	0.010	0.254	0.160	4.064	0.013	0.330	0.165	4.191
8	0.1272	3.231	0.1285	3.264	0.1298	3.297	0.032	0.81	0.009	0.229	0.143	3.632	0.012	0.305	0.148	3.759
9	0.1133	2.878	0.1144	2.906	0.1155	2.934	0.026	0.66	0.009	0.229	0.129	3.277	0.012	0.305	0.134	3.404
10	0.1009	2.563	0.1019	2.588	0.1029	2.614	0.026	0.66	0.008	0.203	0.115	2.921	0.011	0.279	0.120	3.048
11	0.0897	2.278	0.0907	2.304	0.0917	2.329	0.020	0.51	0.008	0.203	0.103	2.616	0.011	0.279	0.108	2.743
12	0.0798	2.027	0.0808	2.052	0.0818	2.078	0.020	0.51	0.008	0.203	0.093	2.362	0.011	0.279	0.098	2.489
13	0.0710	1.803	0.0720	1.829	0.0730	1.854	0.016	0.41	0.008	0.203	0.084	2.134	0.011	0.279	0.089	2.261
14	0.0631	1.603	0.0641	1.628	0.0651	1.654	0.016	0.41	0.008	0.203	0.076	1.930	0.011	0.279	0.081	2.057

* Radii tolerance is plus or minus 25 percent.

NOTE: For direct conversion inches to millimeters, multiply inches by the factor 25.4 (exact). (This note approved as Authorized Engineering Information 3-11-1987.)

Copyright National Electrical Manufacturers Association
Provided by IHS under license with NEMA
No reproduction or networking permitted without license from IHS
Not for Resale

9009279 0001635 409

SINGLE GLASS FIBER COVERED, HIGH TEMPERATURE ORGANIC VARNISH TREATED, BARE OR FILM COATED ROUND COPPER MAGNET WIRE THERMAL CLASS 180

INSULATING MATERIALS. The glass fiber shall be electrical grade continuous filament glass yarn. If an underlying film coating is used, it shall have at least a Class 155 rating. The glass fiber covering shall be wrapped firmly, closely, evenly, and continuously around the wire. The glass fiber covering shall be treated with a high temperature non-silicone organic insulating varnish.

THERMAL CLASS. 180°C as defined in Part 3, para. 3.58.1.2.

GENERAL REQUIREMENTS. See Part 1.

Characteristics	Test Procedure, See Part 3, Paragraph	Requirements
1. DIMENSIONS	3.1.1.2	See Table S (MW 50-C)
2. ADHERENCE AND FLEXIBILITY	3.2.1.2	Covering shall not open sufficiently to expose the bare or film-coated wire after bending on mandrel sizes as follows:

AWG Size	Mandrel Diameter
0 and larger	15d
1 to 30	10d

3. ELONGATION	3.3.1.2.1	Not less than the following:

AWG Size	Minimum Elongation, Percent: With Glass Fiber Covering	Minimum Elongation, Percent: Glass Fiber Covering Removed
4/0–0	35.0	35.0
1–8	30.0	30.0
9–15	20.0	30.0
16–21	15.0	25.0
22–28	...	20.0
29 and 30	...	15.0

6. SPRINGBACK	3.6.2.1	Not greater than 5° for Glass Fiber Covered Bare Not greater than 5.5° for Glass Fiber Covered Film Coated
7. DIELECTRIC STRENGTH	3.7.1.2.1	Not less than the following:

AWG Size	Diameter of Mandrel: inches	Diameter of Mandrel: mm	Minimum Breakdown, Volts*
9 and larger	...	...	170
10–23	1.00	25.4	360
24–30	0.25	6.3	225

*For glass fiber covered wire having an underlying film coating, add the minimum breakdown voltage given in Part 2 for the film coated wire

Copyright National Electrical Manufacturers Association
Provided by IHS under license with NEMA
No reproduction or networking permitted without license from IHS
Not for Resale

9009279 0001636 347

SINGLE GLASS FIBER COVERED, HIGH TEMPERATURE ORGANIC VARNISH TREATED, BARE OR FILM COATED ROUND COPPER MAGNET WIRE
THERMAL CLASS 180
Table S (MW 50-C)

AWG Size	Bare Wire Diameter, Inches†			Minimum Increase, Glass Fiber Covering, Inches†	Maximum Overall Diameter, Inches†			AWG Size
	Minimum	Nominal	Maximum		Bare	Single Film	Heavy Film	
4/0	0.4554	0.4600	0.4646	0.0045	0.4716	.....	.....	4/0
3/0	0.4055	0.4096	0.4137	0.0045	0.4207	.....	.....	3/0
2/0	0.3612	0.3648	0.3684	0.0045	0.3754	.....	.....	2/0
1/0	0.3217	0.3249	0.3281	0.0045	0.3351	.....	.....	1/0
1	0.2864	0.2893	0.2922	0.0045	0.2992	.....	.....	1
2	0.2550	0.2576	0.2602	0.0045	0.2672	.....	.....	2
3	0.2271	0.2294	0.2317	0.0045	0.2367	.....	.....	3
4	0.2023	0.2043	0.2053*	0.0045	0.2133	.....	0.2168	4
5	0.1801	0.1819	0.1828*	0.0045	0.1907	.....	0.1942	5
6	0.1604	0.1620	0.1628*	0.0045	0.1706	.....	0.1741	6
7	0.1429	0.1443	0.1450*	0.0045	0.1527	.....	0.1561	7
8	0.1272	0.1285	0.1292*	0.0045	0.1368	.....	0.1402	8
9	0.1133	0.1144	0.1150*	0.0045	0.1225	.....	0.1259	9
10	0.1009	0.1019	0.1024*	0.0040	0.1089	.....	0.1121	10
11	0.0898	0.0907	0.0912*	0.0040	0.0976	.....	0.1008	11
12	0.0800	0.0808	0.0812*	0.0040	0.0876	.....	0.0907	12
13	0.0713	0.0720	0.0724*	0.0040	0.0787	.....	0.0817	13
14	0.0635	0.0641	0.0644*	0.0040	0.0707	0.0726	0.0742	14
15	0.0565	0.0571	0.0574*	0.0040	0.0637	0.0654	0.0669	15
16	0.0503	0.0508	0.0511*	0.0040	0.0573	0.0591	0.0605	16
17	0.0448	0.0453	0.0455*	0.0040	0.0518	0.0535	0.0548	17
18	0.0399	0.0403	0.0405*	0.0040	0.0467	0.0484	0.0497	18
19	0.0355	0.0359	0.0361*	0.0040	0.0423	0.0439	0.0451	19
20	0.0317	0.0320	0.0322*	0.0040	0.0383	0.0399	0.0411	20
21	0.0282	0.0285	0.0286*	0.0040	0.0348	0.0363	0.0374	21
22	0.0250	0.0253	0.0254*	0.0040	0.0316	0.0330	0.0341	22
23	0.0224	0.0226	0.0227*	0.0040	0.0288	0.0303	0.0313	23
24	0.0199	0.0201	0.0202*	0.0025	0.0243	0.0257	0.0267	24
25	0.0177	0.0179	0.0180*	0.0025	0.0221	0.0234	0.0243	25
26	0.0157	0.0159	0.0160*	0.0025	0.0201	0.0213	0.0222	26
27	0.0141	0.0142	0.0143	0.0025	0.0183	0.0196	0.0204	27
28	0.0125	0.0126	0.0127	0.0025	0.0167	0.0180	0.0187	28
29	0.0112	0.0113	0.0114	0.0025	0.0154	0.0166	0.0173	29
30	0.0099	0.0100	0.0101	0.0025	0.0141	0.0152	0.0159	30

*This maximum bare wire diameter shall be permitted to be exceeded; see 1.4.9.1.
†For metric equivalents, see 1.5.
NOTE: For direct conversion inches to millimeters, multiply inches by the factor 25.4 (exact). (This note approved as Authorized Engineering Information 3.11.1987.)

Copyright National Electrical Manufacturers Association
Provided by IHS under license with NEMA
No reproduction or networking permitted without license from IHS
Not for Resale

9009279 0001637 283

DOUBLE GLASS FIBER COVERED, HIGH TEMPERATURE ORGANIC VARNISH TREATED, BARE OR FILM COATED ROUND COPPER MAGNET WIRE THERMAL CLASS 180

INSULATING MATERIALS. The glass fiber shall be electrical grade continuous filament glass yarn. If an underlying film coating is used, it shall have at least a Class 155 rating. The glass fiber covering shall be wrapped firmly, closely, evenly, and continuously around the wire. Adjacent layers shall be wound in opposite directions. The glass fiber covering shall be treated with a high temperature non-silicone organic insulating varnish.

THERMAL CLASS. 180°C as defined in Part 3, para. 3.58.1.2.

GENERAL REQUIREMENTS. See Part 1.

Characteristics	Test Procedure, See Part 3, Paragraph	Requirements
1. DIMENSIONS	3.1.1.2	See Table D (MW 50-C)
2. ADHERENCE AND FLEXIBILITY	3.2.1.2	Covering shall not open sufficiently to expose the bare or film-coated wire after bending on mandrel sizes as follows:

AWG Size	Mandrel Diameter
0 and larger	15d
1 to 30	10d

3. ELONGATION	3.3.1.2.1	Not less than the following:

AWG Size	Minimum Elongation, Percent	
	With Glass Fiber Covering	Glass Fiber Covering Removed
4/0–0	35.0	35.0
1–8	30.0	30.0
9–15	20.0	30.0
16–21	15.0	25.0
22–28	...	20.0
29 and 30	...	15.0

6. SPRINGBACK	3.6.2.1	Not greater than 5° for Glass Fiber Covered Bare Not greater than 5.5° for Glass Fiber Covered Film Coated
7. DIELECTRIC STRENGTH	3.7.1.2.1	Not less than the following:

AWG Size	Diameter of Mandrel		Minimum Breakdown, Volts*
	inches	mm	
4/0–9	...	...	315
10–23	1.00	25.4	540
24–30	0.25	6.3	400

*For glass fiber covered wire having an underlying film coating, add the minimum breakdown voltage given in Part 2 for the film-coated wire

Copyright National Electrical Manufacturers Association
Provided by IHS under license with NEMA
No reproduction or networking permitted without license from IHS
Not for Resale

DOUBLE GLASS FIBER COVERED, HIGH TEMPERATURE ORGANIC VARNISH TREATED, BARE OR FILM COATED ROUND COPPER MAGNET WIRE
THERMAL CLASS 180
Table D (MW 50-C)

AWG Size	Bare Wire Diameter, Inches†			Minimum Increase, Glass Fiber Covering, Inches†	Maximum Overall Diameter, Inches†			AWG Size
	Minimum	Nominal	Maximum		Bare	Single Film	Heavy Film	
4/0	0.4554	0.4600	0.4646	0.0070	0.4756	.....	.....	4/0
3/0	0.4055	0.4096	0.4137	0.0070	0.4247	.....	.....	3/0
2/0	0.3612	0.3648	0.3684	0.0070	0.3794	.....	.....	2/0
1/0	0.3217	0.3249	0.3281	0.0070	0.3391	.....	.....	1/0
1	0.2864	0.2893	0.2922	0.0070	0.3032	.....	.....	1
2	0.2550	0.2576	0.2602	0.0070	0.2712	.....	.....	2
3	0.2271	0.2294	0.2317	0.0070	0.2427	.....	.....	3
4	0.2023	0.2043	0.2053*	0.0070	0.2173	.....	0.2210	4
5	0.1801	0.1819	0.1828*	0.0070	0.1947	.....	0.1982	5
6	0.1604	0.1620	0.1628*	0.0070	0.1746	.....	0.1781	6
7	0.1429	0.1443	0.1450*	0.0070	0.1567	.....	0.1601	7
8	0.1272	0.1285	0.1292*	0.0070	0.1408	.....	0.1442	8
9	0.1133	0.1144	0.1150*	0.0070	0.1265	.....	0.1299	9
10	0.1009	0.1019	0.1024*	0.0060	0.1119	.....	0.1151	10
11	0.0898	0.0907	0.0912*	0.0060	0.1006	.....	0.1038	11
12	0.0800	0.0808	0.0812*	0.0060	0.0906	.....	0.0937	12
13	0.0713	0.0720	0.0724*	0.0060	0.0817	.....	0.0847	13
14	0.0635	0.0641	0.0644*	0.0060	0.0737	0.0726	0.0772	14
15	0.0565	0.0571	0.0574*	0.0060	0.0667	0.0654	0.0699	15
16	0.0503	0.0508	0.0511*	0.0060	0.0603	0.0621	0.0635	16
17	0.0448	0.0453	0.0455*	0.0060	0.0548	0.0565	0.0578	17
18	0.0399	0.0408	0.0405*	0.0060	0.0497	0.0514	0.0527	18
19	0.0355	0.0359	0.0361*	0.0060	0.0453	0.0469	0.0481	19
20	0.0317	0.0320	0.0322*	0.0060	0.0413	0.0429	0.0441	20
21	0.0282	0.0265	0.0286*	0.0060	0.0378	0.0393	0.0404	21
22	0.0250	0.0253	0.0254*	0.0060	0.0346	0.0360	0.0371	22
23	0.0224	0.0226	0.0227*	0.0060	0.0318	0.0333	0.0343	23
24	0.0199	0.0201	0.0202*	0.0045	0.0263	0.0277	0.0287	24
25	0.0177	0.0179	0.0180*	0.0045	0.0241	0.0254	0.0263	25
26	0.0157	0.0159	0.0160*	0.0045	0.0221	0.0233	0.0242	26
27	0.0141	0.0142	0.0143	0.0045	0.0203	0.0216	0.0224	27
28	0.0125	0.0126	0.0127	0.0045	0.0187	0.0200	0.0207	28
29	0.0112	0.0113	0.0114	0.0045	0.0174	0.0186	0.0193	29
30	0.0099	0.0100	0.0101	0.0045	0.0161	0.0172	0.0179	30

*This maximum bare wire diameter shall be permitted to be exceeded; see 1.4.9.1.
†For metric equivalent, see 1.5.
NOTE: For direct conversion inches to millimeters, multiply inches by the factor 25.4 (exact). (This note approved as Authorized Engineering Information 3-11-1987.)

Copyright National Electrical Manufacturers Association
Provided by IHS under license with NEMA
No reproduction or networking permitted without license from IHS Not for Resale

9009279 0001639 056

SINGLE POLYESTER GLASS FIBER COVERED, HIGH TEMPERATURE ORGANIC VARNISH TREATED, BARE OR FILM COATED, ROUND COPPER MAGNET WIRE THERMAL CLASS 180

INSULATING MATERIALS. The fiber covering shall consist of a combination of polyester and glass fibers. The glass fibers shall be electrical grade continuous filament glass yarn. The polyester fiber shall be a high grade yarn resulting from the linear polymerization of ethylene glycol and terephthalic acid. The maximum content by weight of polyester fiber in the yarn shall not exceed 50 percent. If an underlying film coating is used, it shall have at least a Class 155 rating. The polyester glass fiber covering shall be wrapped firmly, closely, evenly, and continuously around the wire. The polyester glass fiber covering shall be fused and shall be treated with a high temperature non-silicone organic insulating varnish.

THERMAL CLASS. 180°C as defined in Part 3, para. 3.58.1.2.

GENERAL REQUIREMENTS. See Part 1.

Characteristics	Test Procedure, See Part 3, Paragraph	Requirements
1. DIMENSIONS	3.1.1.2	See Table S (MW 51-C)
2. ADHERENCE AND FLEXIBILITY	3.2.1.2.1	Covering shall not open sufficiently to expose the bare or underlying film-coated wire after bending 9 AWG and heavier wire on a 10d mandrel and 10 through 30 AWG wire on a 5d mandrel
	3.2.1.2.2	There shall be no loosening, fraying or loss of adherence of the covering except at the point of rupture
3. ELONGATION	3.3.1.2.2	Not less than the following:

AWG Size	Minimum Elongation Percent
4–8	30.0
9–15	20.0
16–21	15.0
22–30	10.0

6. SPRINGBACK	3.6.2.1	Not greater than 5° for Glass Fiber Covered Bare Not greater than 5.5° for Glass Fiber Covered Film Coated	
7. DIELECTRIC STRENGTH	3.7.1.2.1	Not less than the following:	

AWG Size	Diameter of Mandrel, inches	Diameter of Mandrel, mm	Minimum Breakdown, Volts*
4–9	...	...	150
10–23	1.00	25.4	360
24–30	0.25	6.3	225

*For polyester glass fiber covered wire having an underlying film coating, add the minimum breakdown voltage given in Part 2 for the film coated wire

Copyright National Electrical Manufacturers Association
Provided by IHS under license with NEMA
No reproduction or networking permitted without license from IHS
Not for Resale

SINGLE POLYESTER GLASS FIBER COVERED HIGH TEMPERATURE ORGANIC VARNISH TREATED, BARE OR FILM COATED ROUND COPPER MAGNET WIRE THERMAL CLASS 180

Table S (MW 51-C)

AWG Size	Bare Wire Diameter, Inches†			Minimum Increase, Single Polyester-glass-fiber Covering, Inches†	Maximum Overall Diameter, Inches†			AWG Size
	Minimum	Nominal	Maximum		Bare	Single Film	Heavy Film	
4	0.2023	0.2043	0.2053*	0.0040	.....	.....	0.2158	4
5	0.1801	0.1819	0.1828*	0.0040	.....	.....	0.1932	5
6	0.1604	0.1620	0.1628*	0.0040	.....	.....	0.1731	6
7	0.1429	0.1443	0.1450*	0.0040	.....	.....	0.1551	7
8	0.1272	0.1285	0.1292*	0.0040	.....	.....	0.1392	8
9	0.1133	0.1144	0.1150*	0.0040	.....	.....	0.1249	9
10	0.1009	0.1019	0.1024*	0.0035	0.1079	.....	0.1111	10
11	0.0898	0.0907	0.0912*	0.0035	0.0966	.....	0.0998	11
12	0.0800	0.0808	0.0812*	0.0035	0.0866	.....	0.0897	12
13	0.0713	0.0720	0.0724*	0.0035	0.0777	.....	0.0807	13
14	0.0635	0.0641	0.0644*	0.0035	0.0697	0.0716	0.0732	14
15	0.0565	0.0571	0.0574*	0.0035	0.0627	0.0644	0.0659	15
16	0.0503	0.0508	0.0511*	0.0035	0.0563	0.0581	0.0595	16
17	0.0448	0.0453	0.0455*	0.0035	0.0508	0.0525	0.0538	17
18	0.0399	0.0403	0.0405*	0.0035	0.0457	0.0474	0.0487	18
19	0.0355	0.0359	0.0361*	0.0035	0.0413	0.0429	0.0441	19
20	0.0317	0.0320	0.0322*	0.0035	0.0373	0.0389	0.0401	20
21	0.0282	0.0285	0.0286*	0.0035	0.0338	0.0353	0.0364	21
22	0.0250	0.0253	0.0254*	0.0035	0.0306	0.0320	0.0331	22
23	0.0224	0.0226	0.0227*	0.0035	0.0278	0.0293	0.0303	23
24	0.0199	0.0201	0.0202*	0.0025	0.0253	0.0267	0.0277	24
25	0.0177	0.0179	0.0180*	0.0025	0.0231	0.0244	0.0253	25
26	0.0157	0.0159	0.0160*	0.0025	0.0211	0.0223	0.0232	26
27	0.0141	0.0142	0.0143	0.0025	0.0193	0.0206	0.0214	27
28	0.0125	0.0126	0.0127	0.0025	0.0177	0.0190	0.0197	28
29	0.0112	0.0113	0.0114	0.0025	0.0164	0.0176	0.0183	29
30	0.0099	0.0100	0.0101	0.0025	0.0151	0.0162	0.0169	30

*This maximum bare wire diameter shall be permitted to be exceeded; see 1.4.9.1.
†For metric equivalent, see 1.5.
NOTE: For direct conversion inches to millimeters, multiply inches by the factor 25.4 (exact). (This note approved as Authorized Engineering Information 3-11-1987.)

Copyright National Electrical Manufacturers Association
Provided by IHS under license with NEMA
No reproduction or networking permitted without license from IHS
Not for Resale

9009279 0091641 704

DOUBLE POLYESTER GLASS FIBER COVERED, HIGH TEMPERATURE ORGANIC VARNISH TREATED, BARE OR FILM COATED, ROUND COPPER MAGNET WIRE THERMAL CLASS 180

INSULATING MATERIALS. The fiber covering shall consist of a combination of polyester and glass fibers. The glass fibers shall be electrical grade continuous filament glass yarn. The polyester fiber shall be a high grade yarn resulting from the linear polymerization of ethylene glycol and terephthalic acid. The maximum content by weight of polyester fiber in the yarn shall not exceed 50 percent. If an underlying film coating is used, it shall have at least a Class 155 rating. The polyester glass fiber covering shall be wrapped firmly, closely, evenly, and continuously around the wire. Adjacent layers shall be wound in opposite directions. The polyester glass fiber covering shall be fused and shall be treated with a high temperature non-silicone organic insulating varnish. When specified, either layer may consist of 100 percent glass fiber.

THERMAL CLASS. 180°C as defined in Part 3, para. 3.58.1.2.

GENERAL REQUIREMENTS. See Part 1.

Characteristics	Test Procedure, See Part 3, Paragraph	Requirements
1. DIMENSIONS	3.1.1.2	See Table D (MW 51-C)
2. ADHERENCE AND FLEXIBILITY	3.2.1.2.1	Covering shall not open sufficiently to expose the bare or underlying film-coated wire after bending 9 AWG and heavier wire on a 10d mandrel and 10 through 30 AWG wire on a 5d mandrel
	3.2.1.2.2	There shall be no loosening, fraying or loss of adherence of the covering except at the point of rupture
3. ELONGATION	3.3.1.2.2	Not less than the following:

AWG Size	Minimum Elongation Percent
4–8	30.0
9–15	20.0
16–21	15.0
22–30	10.0

6. SPRINGBACK	3.6.2.1	Not greater than 5° for Glass Fiber Covered Bare Not greater than 5.5° for Glass Fiber Covered Film Coated	
7. DIELECTRIC STRENGTH	3.7.1.2.1	Not less than the following:	

AWG Size	Diameter of Mandrel, inches	Diameter of Mandrel, mm	Minimum Breakdown, Volts*
4–9	...	...	270
10–23	1.00	25.4	540
24–30	0.25	6.3	400

*For polyester glass fiber covered wire having an underlying film coating, add the minimum breakdown voltage given in Part 2 for the film-coated wire

Copyright National Electrical Manufacturers Association
Provided by IHS under license with NEMA
No reproduction or networking permitted without license from IHS
Not for Resale

9009279 0001642 540

DOUBLE POLYESTER GLASS FIBER COVERED, HIGH TEMPERATURE ORGANIC VARNISH TREATED, BARE OR FILM COATED ROUND COPPER MAGNET WIRE THERMAL CLASS 180

Table D (MW 51-C)

AWG Size	Bare Wire Diameter, Inches†			Minimum Increase, Double Polyester-glass-fiber Covering, Inches†	Maximum Overall Diameter, Inches†			AWG Size
	Minimum	Nominal	Maximum		Bare	Single Film	Heavy Film	
4	0.2023	0.2043	0.2053*	0.0060	0.2153	.....	0.2188	4
5	0.1801	0.1819	0.1828*	0.0060	0.1927	.....	0.1962	5
6	0.1604	0.1620	0.1628*	0.0060	0.1726	.....	0.1761	6
7	0.1429	0.1443	0.1450*	0.0060	0.1547	.....	0.1581	7
8	0.1272	0.1285	0.1292*	0.0060	0.1388	.....	0.1422	8
9	0.1133	0.1144	0.1150*	0.0060	0.1245	.....	0.1279	9
10	0.1009	0.1019	0.1024*	0.0055	0.1109	.....	0.1141	10
11	0.0898	0.0907	0.0912*	0.0055	0.0996	.....	0.1028	11
12	0.0800	0.0808	0.0812*	0.0055	0.0896	.....	0.0927	12
13	0.0713	0.0720	0.0724*	0.0055	0.0807	.....	0.0837	13
14	0.0635	0.0641	0.0644*	0.0055	0.0727	0.0746	0.0762	14
15	0.0565	0.0571	0.0574*	0.0055	0.0657	0.0674	0.0689	15
16	0.0503	0.0508	0.0511*	0.0055	0.0593	0.0611	0.0625	16
17	0.0448	0.0453	0.0455*	0.0055	0.0538	0.0555	0.0568	17
18	0.0399	0.0403	0.0405*	0.0055	0.0487	0.0504	0.0517	18
19	0.0355	0.0359	0.0361*	0.0055	0.0443	0.0459	0.0471	19
20	0.0317	0.0320	0.0322*	0.0055	0.0403	0.0419	0.0431	20
21	0.0282	0.0285	0.0286*	0.0055	0.0368	0.0383	0.0304	21
22	0.0250	0.0253	0.0254*	0.0055	0.0336	0.0350	0.0361	22
23	0.0224	0.0226	0.0227*	0.0055	0.0308	0.0323	0.0333	23
24	0.0199	0.0201	0.0202*	0.0045	0.0268	0.0282	0.0292	24
25	0.0177	0.0179	0.0180*	0.0045	0.0246	0.0259	0.0268	25
26	0.0157	0.0159	0.0160*	0.0045	0.0226	0.0238	0.0247	26
27	0.0141	0.0142	0.0143	0.0045	0.0208	0.0221	0.0229	27
28	0.0125	0.0126	0.0127	0.0045	0.0192	0.0205	0.0212	28
29	0.0112	0.0113	0.0114	0.0045	0.0179	0.0191	0.0198	29
30	0.0099	0.0100	0.0101	0.0045	0.0166	0.0177	0.0184	30

*This maximum bare wire diameter shall be permitted to be exceeded; see 1.4.9.1.
†For metric equivalent, see 1.5.
NOTE: For direct conversion inches to millimeters, multiply inches by the factor 25.4 (exact). (This note approved as Authorized Engineering Information 3-11-1987.)

Copyright National Electrical Manufacturers Association
Provided by IHS under license with NEMA
No reproduction or networking permitted without license from IHS
Not for Resale

9009279 0001543 587

SINGLE GLASS FIBER COVERED, HIGH TEMPERATURE ORGANIC VARNISH TREATED, HEAVY FILM COATED RECTANGULAR AND SQUARE COPPER MAGNET WIRE THERMAL CLASS 180

INSULATING MATERIALS. The glass fiber shall be electrical grade continuous filament glass yarn. The underlying film coating shall have at least a Class 155 rating. The glass fiber covering shall be wrapped firmly, closely, evenly, and continuously around the wire. The glass fiber covering shall be treated with a high-temperature non-silicone organic insulating varnish.

THERMAL CLASS. 180°C as defined in Part 3, para. 3.58.2.2.

GENERAL REQUIREMENTS. See Part 1.

Characteristics	Test Procedure, See Part 3, Paragraph	Requirements
1. DIMENSIONS	3.1.2.2	Rectangular Wire: a. Radii—see Table 1-13 b. Thickness and width tolerances—see Table 1-14 c. Dimensions and increase in thickness—see Table STW (MW 52-C) Square Wire: a. Radii—see Table SSQ (MW 52-C) b. Bare size, increase due to insulation—see Table SSQ (MW 52-C)
2. ADHERENCE AND FLEXIBILITY	3.2.2.2.2	No cracks shall be visible in the film coating after 20 percent elongation. Examine with normal vision and without removal of glass fiber covering
3. ELONGATION	3.3.2.2	Not less than 32 percent for thicknesses of 0.049 inch (1.25 mm) and greater or 30 percent for thicknesses less than 0.049 inch (1.25 mm)
6. SPRINGBACK	3.6.2.1	Not greater than 5.5°
7. DIELECTRIC STRENGTH	3.7.2.2	Not less than 90 volts/mil (3543 v/mm) of the minimum thickness of the glass fiber covering on one side [one-half the minimum calculated from Tables STW or SSQ (MW 52-C)] plus the minimum breakdown given in Part 2 for the film-coated wire

Copyright National Electrical Manufacturers Association
Provided by IHS under license with NEMA
No reproduction or networking permitted without license from IHS
Not for Resale

SINGLE GLASS FIBER COVERED, HIGH TEMPERATURE ORGANIC VARNISH TREATED, HEAVY FILM COATED RECTANGULAR AND SQUARE COPPER MAGNET WIRE THERMAL CLASS 180

Table STW (MW 52-C)

Maximum Increase in Thickness, Inches (mm), Due to
Single Glass fiber Covering, Heavy Film Coating and High temperature organic Varnish,
Rectangular Wire

Nominal Thickness		Nominal Width																												Nominal Thickness	
Millimeters	Inches	2.00	2.12	2.24	2.37	2.50	2.65	2.80	3.00	3.15	3.35	3.55	3.75	4.00	4.25	4.50	4.75	5.00	5.30	5.60	6.00	6.30	6.70	7.10	7.50	8.00	8.50	9.00	9.50	10.0	10.6	11.2	11.8	12.5	Inches	Millimeters
		0.079	†0.083	0.088	†0.093	0.098	†0.104	0.110	†0.118	0.124	†0.132	0.140	†0.148	0.157	†0.167	0.177	†0.187	0.197	†0.209	0.220	†0.236	0.248	†0.264	0.280	†0.295	0.315	†0.335	0.354	†0.374	0.394	†0.417	0.441	†0.465	0.492		
0.63	0.025																																		0.025	0.63
0.71	0.028																																		0.028	0.71
0.80	0.031																																		0.031	0.80
0.90	0.035																																		0.035	0.90
1.00	0.039	0.012" (0.305 mm)							0.013" (0.330 mm)									0.014" (0.356 mm)			0.015" (0.381 mm)				0.016" (0.406 mm)									0.039	1.00
1.12	0.044																																		0.044	1.12
1.25	0.049																																		0.049	1.25
1.40	0.055																																		0.055	1.40
1.60	0.063																																		0.063	1.60
1.80	0.071																																		0.071	1.80
2.00	0.079																																		0.079	2.00
2.24	0.088																																		0.088	2.24
2.50	0.098																																		0.098	2.50
2.80	0.110																																		0.110	2.80
3.15	0.124																																		0.124	3.15
3.55	0.140																																		0.140	3.55
4.00	0.157																																		0.157	4.00
4.50	0.177																																		0.177	4.50
5.00	0.197																																		0.197	5.00
5.60	0.220																																		0.220	5.60

† R-40 Series Intermediate Numbers.

EXAMPLE—Preferred Size ..... 0.055 x 0.110 (R-20 x R-20)
Intermediate Size ... 0.055 x 0.118 (R-20 x R-40)

NOTE I—The maximum increase due to the glass fiber covering shall be permitted to be exceeded provided the overall dimension of the covered wire does not exceed the sum of the maximum thickness of the bare wire plus the maximum increase due to the heavy film coating and single glass fiber covering.

NOTE II—The increase in thickness due to the heavy film coating shall be in accordance with the applicable section for film coated wire in Part 2.

NOTE III—The increase in thickness due to the single glass fiber covering shall be determined by subtracting 0.005 inch (0.127 mm) (maximum thickness of film coating) from the maximum increase in thickness given in the table.

NOTE IV—The increase in width due to the glass fiber covering shall be equal to or less than the maximum increase in thickness given in the table. Note I applies to the increase in width as well as the increase in thickness.

NOTE V—Because it is impossible to accurately separate the glass fiber covering from the film coating, the total minimum increase in the thickness of the film-coated glass fiber covered rectangular wire shall be the sum of the minimum increase due to the film coating (as shown for film-coated wire in Part 2) and the minimum increase due to the glass-fiber covering. The total minimum increase shall be not less than 70 percent of the maximum increase given in the table above, rounded to the nearest 0.001 inch (0.025 mm).

NOTE VI—For direct conversion of inches to millimeters, multiply inches by the factor 25.4 (exact). (This note approved as Authorized Engineering Information 3-11-1987.)

Copyright National Electrical Manufacturers Association
Provided by IHS under license with NEMA
No reproduction or networking permitted without license from IHS
Not for Resale

9009279 0001645 35T

SINGLE GLASS FIBER COVERED, HIGH TEMPERATURE ORGANIC VARNISH TREATED, HEAVY FILM COATED RECTANGULAR AND SQUARE COPPER MAGNET WIRE
THERMAL CLASS 180
Table SSQ (MW 52-C)

Minimum Increase and Maximum Overall Dimensions, Inches (mm), Due to Single Glass fiber Covering, Heavy Film Coating and High temperature organic Varnish, Square Wire

Square AWG Size	Bare Wire Dimension						Nominal Radii*		Insulation				Square AWG Size
	Minimum		Nominal		Maximum				Minimum Increase in Dimension		Maximum Overall Dimension		
	inches	mm	inches	mm	inches	mm	inches	mm	inches	mm	inches	mm	
0	0.3219	8.176	0.3249	8.252	0.3279	8.329	0.040	1.02	0.011	0.279	0.344	8.738	0
1	0.2864	7.275	0.2893	7.348	0.2922	7.422	0.040	1.02	0.010	0.254	0.307	7.798	1
2	0.2550	6.477	0.2576	6.543	0.2602	6.609	0.040	1.02	0.010	0.254	0.275	6.985	2
3	0.2271	5.768	0.2294	5.827	0.2317	5.885	0.040	1.02	0.010	0.254	0.247	6.274	3
4	0.2023	5.138	0.2043	5.189	0.2063	5.240	0.040	1.02	0.010	0.254	0.221	5.613	4
5	0.1801	4.575	0.1819	4.620	0.1837	4.666	0.040	1.02	0.009	0.229	0.198	5.029	5
6	0.1604	4.074	0.1620	4.115	0.1636	4.155	0.032	0.81	0.009	0.229	0.178	4.521	6
7	0.1429	3.630	0.1443	3.665	0.1457	3.701	0.032	0.81	0.009	0.229	0.159	4.039	7
8	0.1272	3.231	0.1285	3.264	0.1298	3.297	0.032	0.81	0.009	0.229	0.143	3.632	8
9	0.1133	2.878	0.1144	2.906	0.1155	2.934	0.026	0.66	0.009	0.229	0.129	3.277	9
10	0.1009	2.563	0.1019	2.588	0.1029	2.614	0.026	0.66	0.009	0.229	0.116	2.946	10
11	0.0897	2.278	0.0907	2.304	0.0917	2.329	0.020	0.51	0.008	0.203	0.104	2.642	11
12	0.0798	2.027	0.0808	2.052	0.0818	2.078	0.020	0.51	0.008	0.203	0.094	2.388	12
13	0.0710	1.803	0.0720	1.829	0.0730	1.854	0.016	0.41	0.008	0.203	0.085	2.159	13
14	0.0631	1.603	0.0641	1.628	0.0651	1.654	0.016	0.41	0.008	0.203	0.077	1.956	14

* Radii tolerance is plus or minus 25 percent.

NOTE: For direct conversion of inches to millimeters, multiply inches by the factor 25.4 (exact).

Authorized Engineering Information 3-11-1987.)

Copyright National Electrical Manufacturers Association
Provided by IHS under license with NEMA
No reproduction or networking permitted without license from IHS
Not for Resale

9009279 0001646 296

DOUBLE GLASS FIBER COVERED, HIGH TEMPERATURE ORGANIC VARNISH TREATED, BARE OR HEAVY FILM COATED RECTANGULAR AND SQUARE COPPER MAGNET WIRE THERMAL CLASS 180

INSULATING MATERIALS. The glass fiber shall be electrical grade continuous filament glass yarn. If an underlying film coating is used it shall have at least a Class 155 rating. The glass fiber covering shall be wrapped firmly, closely, evenly, and continuously around the wire. Adjacent layers shall be wound in opposite directions. The glass fiber covering shall be treated with a high-temperature non-silicone organic insulating varnish.

THERMAL CLASS. 180°C as defined in Part 3, para. 3.58.2.2.

GENERAL REQUIREMENTS. See Part 1.

Characteristics	Test Procedure, See Part 3, Paragraph	Requirements
1. DIMENSIONS	3.1.2.2	Rectangular Wire: a. Radii—see Table 1-13 b. Thickness and width tolerances—see Table 1-14 c. Dimensions and increase in thickness—see Table DTW-1 and DTW-2 (MW 52-C) Square Wire: a. Radii—see Table DSQ (MW 52-C) b. Bare size, increase due to insulation—see Table DSQ (MW 52-C)
2. ADHERENCE AND FLEXIBILITY	3.2.2.2.1	Not less than 75 volts/mil (2950 v/mm) of minimum thickness of the glass fiber covering on one side [one-half the minimum calculated from Tables DTW-1 and DTW-2 for rectangular or Table DSQ (MW 52-C) for square]
	3.2.2.2.2	No cracks shall be visible in the film coating after 20 percent elongation. Examine with normal vision and without removal of glass fiber covering
3. ELONGATION	3.3.2.2	Not less than 32 percent for thicknesses of 0.049 inch (1.25 mm) and greater or 30 percent for thicknesses less than 0.049 inch (1.25 mm)
6. SPRINGBACK	3.6.2.1	Not greater than 5° for Glass Fiber Covered Bare Not greater 5.5° for Glass Fiber Covered Heavy Film Coated
7. DIELECTRIC STRENGTH	3.7.2.2	Not less than 90 volts/mil (3543 v/mm) of the minimum thickness of the glass fiber covering on one side [one-half the minimum calculated from Tables DTW-1, DTW-2, or DSQ (MW 52-C)] plus the minimum breakdown given in Part 2 of the film-coated wire

Copyright National Electrical Manufacturers Association
Provided by IHS under license with NEMA
No reproduction or networking permitted without license from IHS
Not for Resale

DOUBLE GLASS FIBER COVERED, HIGH TEMPERATURE ORGANIC VARNISH TREATED, BARE OR HEAVY FILM COATED RECTANGULAR AND SQUARE COPPER MAGNET WIRE THERMAL CLASS 180

Table DTW-1 (MW 52-C)

Maximum Increase in Thickness, Inches (mm), Due to Double Glass fiber Covering and High temperature organic Varnish, Rectangular Wire

Nominal Thickness		Nominal Width																												Nominal Thickness	
Millimeters	Inches	2.00	2.12	2.24	2.37	2.50	2.65	2.80	3.00	3.15	3.35	3.55	3.75	4.00	4.25	4.50	4.75	5.00	5.30	5.60	6.00	6.30	6.70	7.10	7.50	8.00	8.50	9.00	9.50	10.0	10.6	11.2	11.8	12.5	Inches	Millimeters
		0.079	†0.083	0.088	†0.093	0.098	†0.104	0.110	†0.118	0.124	†0.132	0.140	†0.148	0.157	†0.167	0.177	†0.187	0.197	†0.209	0.220	†0.236	0.248	†0.264	0.280	†0.295	0.315	†0.335	0.354	†0.374	0.394	†0.417	0.441	†0.465	0.492		
0.63	0.025																																		0.025	0.63
0.71	0.028																																		0.028	0.71
0.80	0.031																																		0.031	0.80
0.90	0.035																																		0.035	0.90
1.00	0.039	0.012" (0.305 mm)							0.013" (0.330 mm)			0.014" (0.356 mm)						0.015" (0.381 mm)			0.016" (0.406 mm)								0.018" (0.457 mm)						0.039	1.00
1.12	0.044																																		0.044	1.12
1.25	0.049																																		0.049	1.25
1.40	0.055																																		0.055	1.40
1.60	0.063																																		0.063	1.60
1.80	0.071																																		0.071	1.80
2.00	0.079																																		0.079	2.00
2.24	0.088																																		0.088	2.24
2.50	0.098																																		0.098	2.50
2.80	0.110																																		0.110	2.80
3.15	0.124																																		0.124	3.15
3.55	0.140																								0.017" (0.432 mm)								0.019" (0.483 mm)		0.140	3.55
4.00	0.157																																		0.157	4.00
4.50	0.177																																		0.177	4.50
5.00	0.197																																		0.197	5.00
5.60	0.220																																		0.220	5.60

† R-40 Series Intermediate Numbers.

EXAMPLE—Preferred Size ..... 0.055 x 0.110 (R-20 x R-20)
Intermediate Size ... 0.055 x 0.118 (R-20 x R-40)

NOTE I—The maximum increase due to the glass fiber covering shall be permitted to be exceeded provided the overall dimension of the covered wire does not exceed the sum of the maximum thickness of the bare wire plus the maximum increase due to the glass fiber covering.

NOTE II—The minimum increase due to the glass fiber covering shall be not less than 70 percent of the maximum shown in the table above, rounded to the nearest 0.001 inch (0.025 mm).

NOTE III—The increase in width due to the glass fiber covering shall be equal to or less than the maximum increase in thickness given in the table. Note I applies to the increase in width as well as the increase in thickness.

NOTE IV—For direct conversion of inches to millimeters, multiply inches by the factor 25.4 (exact). (This note approved as Authorized Engineering Information 3-11-1987.)

Copyright National Electrical Manufacturers Association
Provided by IHS under license with NEMA
No reproduction or networking permitted without license from IHS
Not for Resale

9009279 0001648 069

DOUBLE GLASS FIBER COVERED, HIGH TEMPERATURE ORGANIC VARNISH TREATED, BARE OR HEAVY FILM COATED RECTANGULAR AND SQUARE COPPER MAGNET WIRE THERMAL CLASS 180

Table DTW-2 (MW 52-C)

Maximum Increase in Thickness, Inches (mm), Due to Heavy Film Coating, Double Glass fiber Covering and High temperature-organic Varnish, Rectangular Wire

Nominal Thickness		Nominal Width																												Nominal Thickness	
Millimeters		2.00	2.12	2.24	2.37	2.50	2.65	2.80	3.00	3.15	3.35	3.55	3.75	4.00	4.25	4.50	4.75	5.00	5.30	5.60	6.00	6.30	6.70	7.10	7.50	8.00	8.50	9.00	9.50	10.0	10.6	11.2	11.8	12.5	Millimeters	
	Inches	0.079	† 0.083	0.088	† 0.093	0.098	† 0.104	0.110	† 0.118	0.124	† 0.132	0.140	† 0.148	0.157	† 0.167	0.177	† 0.187	0.197	† 0.209	0.220	† 0.236	0.248	† 0.264	0.280	† 0.295	0.315	† 0.335	0.354	† 0.374	0.394	† 0.417	0.441	† 0.465	0.492	Inches	
0.63	0.025																																		0.025	0.63
0.71	0.028																																		0.028	0.71
0.80	0.031																																		0.031	0.80
0.90	0.035																																		0.035	0.90
1.00	0.039	0.017" (0.432 mm)							0.018" (0.457 mm)				0.019" (0.483 mm)					0.020" (0.508 mm)			0.021" (0.533 mm)								0.023" (0.584 mm)						0.039	1.00
1.12	0.044																																		0.044	1.12
1.25	0.049																																		0.049	1.25
1.40	0.055																																		0.055	1.40
1.60	0.063																																		0.063	1.60
1.80	0.071																																		0.071	1.80
2.00	0.079																																		0.079	2.00
2.24	0.088																																		0.088	2.24
2.50	0.098																																		0.098	2.50
2.80	0.110																																		0.110	2.80
3.15	0.124																																		0.124	3.15
3.55	0.140																								0.022" (0.559 mm)								0.024" (0.610 mm)		0.140	3.55
4.00	0.157																																		0.157	4.00
4.50	0.177																																		0.177	4.50
5.00	0.197																																		0.197	5.00
5.60	0.220																																		0.220	5.60

† R-40 Series Intermediate Numbers.

EXAMPLE—Preferred Size ..... 0.055 x 0.110 (R-20 x R-20)
Intermediate Size ... 0.055 x 0.118 (R-20 x R-40)

NOTE I—The maximum increase due to the glass fiber covering shall be permitted to be exceeded provided the overall dimension of the covered wire does not exceed the sum of the maximum thickness of the bare or film coated wire plus the maximum increase given in Table DTW-2 (MW 52-C).

NOTE II—The increase in thickness due to the heavy film coating shall be in accordance with the applicable section for film coated wire in Part 2.

NOTE III—The minimum increase due to the glass fiber covering shall be not less than 70 percent of the maximum shown in Table DTW-1 (MW 52-C), rounded to the nearest 0.001 inch (0.025 mm).

NOTE IV—The increase in width due to the glass fiber covering shall be equal to or less than the maximum increase in thickness given in Table DTW-1 (MW 52-C). Note I applies to the increase in width as well as the increase in thickness.

NOTE V—Because it is impossible to accurately separate the glass fiber covering from the film coating, the total minimum increase in the thickness of a film coated glass fiber covered rectangular wire shall be the sum of the minimum increase due to the film coating (as shown for film coated wire in Part 2) and the minimum increase due to the glass fiber covering. The total minimum increase shall be not less than 70 percent of the maximum increase given in Table DTW-1 (MW 52-C) plus the minimum for the film coated wire, rounded to the nearest 0.001 inch (0.025 mm).

NOTE VI—For direct conversion of inches to millimeters, multiply inches by the factor 25.4 (exact). (This note approved as Authorized Engineering Information 3-11-1987.)

Copyright National Electrical Manufacturers Association
Provided by IHS under license with NEMA
No reproduction or networking permitted without license from IHS
Not for Resale

9009279 0001649 TT5

DOUBLE GLASS FIBER COVERED, HIGH TEMPERATURE ORGANIC VARNISH TREATED, BARE OR HEAVY FILM COATED RECTANGULAR AND SQUARE COPPER MAGNET WIRE
THERMAL CLASS 180
Table DSQ (MW 52-C)

Minimum Increase and Maximum Overall Dimensions, Inches (mm), Due to Double Glass fiber Covering and High temperature organic Varnish, Square Wire

Square AWG Size	Bare Wire Dimensions						Nominal Radii *		Bare Double-glass-covered Wire				Heavy-film-coated Double-glass-covered Wire			
	Minimum		Nominal		Maximum				Minimum Increase in Dimension		Maximum Overall Dimension		Minimum Increase in Dimension		Maximum Overall Dimension	
	inches	mm	inches	mm	inches	mm	inches	mm	inches	mm	inches	mm	inches	mm	inches	mm
0	0.3219	8.176	0.3249	8.252	0.3279	8.329	0.040	1.02	0.013	0.330	0.346	8.788	0.016	0.406	0.351	8.915
1	0.2864	7.275	0.2893	7.348	0.2922	7.422	0.040	1.02	0.012	0.305	0.309	7.849	0.015	0.381	0.314	7.976
2	0.2550	6.477	0.2576	6.543	0.2602	6.609	0.040	1.02	0.012	0.305	0.277	7.036	0.015	0.381	0.282	7.163
3	0.2271	5.768	0.2294	5.827	0.2317	5.885	0.040	1.02	0.011	0.279	0.248	6.299	0.014	0.356	0.253	6.426
4	0.2023	5.138	0.2043	5.189	0.2063	5.240	0.040	1.02	0.011	0.279	0.222	5.639	0.014	0.356	0.227	5.766
5	0.1801	4.575	0.1819	4.620	0.1837	4.666	0.040	1.02	0.011	0.279	0.199	5.055	0.014	0.356	0.204	5.182
6	0.1604	4.074	0.1620	4.115	0.1636	4.155	0.032	0.81	0.011	0.279	0.179	4.547	0.014	0.356	0.184	4.674
7	0.1429	3.630	0.1443	3.665	0.1457	3.701	0.032	0.81	0.010	0.254	0.160	4.064	0.013	0.330	0.165	4.191
8	0.1272	3.231	0.1285	3.264	0.1298	3.297	0.032	0.81	0.010	0.254	0.144	3.658	0.013	0.330	0.149	3.785
9	0.1133	2.878	0.1144	2.906	0.1155	2.934	0.026	0.66	0.009	0.229	0.129	3.277	0.012	0.305	0.134	3.404
10	0.1009	2.563	0.1019	2.588	0.1029	2.614	0.026	0.66	0.009	0.229	0.116	2.946	0.012	0.305	0.121	3.073
11	0.0897	2.278	0.0907	2.304	0.0917	2.329	0.020	0.51	0.008	0.203	0.104	2.642	0.011	0.279	0.109	2.769
12	0.0798	2.027	0.0808	2.052	0.0818	2.078	0.020	0.51	0.008	0.203	0.094	2.388	0.011	0.279	0.099	2.515
13	0.0710	1.803	0.0720	1.829	0.0730	1.854	0.016	0.41	0.008	0.203	0.085	2.159	0.011	0.279	0.090	2.286
14	0.0631	1.603	0.0641	1.628	0.0651	1.654	0.016	0.41	0.008	0.203	0.077	1.956	0.011	0.279	0.082	2.083

* Radii tolerance is plus or minus 25 percent.

NOTE: For direct conversion of inches to millimeters, multiply inches by the factor 25.4 (exact).

Authorized Engineering Information 3-11-1987.

Copyright National Electrical Manufacturers Association
Provided by IHS under license with NEMA
No reproduction or networking permitted without license from IHS
Not for Resale

9009279 0001650 717

SINGLE POLYESTER GLASS FIBER COVERED, HIGH TEMPERATURE ORGANIC VARNISH TREATED, HEAVY FILM COATED RECTANGULAR AND SQUARE COPPER MAGNET WIRE THERMAL CLASS 180

INSULATING MATERIALS. The fiber covering shall consist of a combination of polyester and glass fibers. The glass fibers shall be electrical grade continuous filament glass yarn. The polyester fiber covering shall be a high grade yarn resulting from the linear polymerization of ethylene glycol and terephthalic acid. The maximum content by weight of polyester fiber in the yarn shall not exceed 50 percent. The underlying film coating shall have at least a Class 155 rating. The polyester glass fiber covering shall be wrapped firmly, closely, evenly, and continuously around the wire. The polyester glass fiber covering shall be fused and treated with a high-temperature non-silicone insulating varnish.

THERMAL CLASS. 180°C as defined in Part 3, para. 3.58.2.2.

GENERAL REQUIREMENTS. See Part 1.

Characteristics	Test Procedure, See Part 3, Paragraph	Requirements
1. DIMENSIONS	3.1.2.2	Rectangular Wire: a. Radii—see Table 1-13 b. Thickness and width tolerances—see Table 1-14 c. Dimensions and increase in thickness—see Table STW (MW 53-C) Square Wire: a. Radii—see Table SSQ (MW 53-C) b. Bare size, increase due to insulation—see Table SSQ (MW 53-C)
2. ADHERENCE AND FLEXIBILITY	3.2.2.2.2	No cracks visible in the film coating after 20 percent elongation. Examine with normal vision and without removal of glass fiber covering
3. ELONGATION	3.3.2.2	Not less than 32 percent for thicknesses of 0.049 inch (1.25 mm) and greater or 30 percent for thicknesses less than 0.049 inch (1.25 mm).
6. SPRINGBACK	3.6.2.1	Not greater than 5.5°
7. DIELECTRIC STRENGTH	3.7.2.2	Not less than 90 volts/mil (3543 v/mm) of the minimum thickness of the polyester glass fiber covering on one side [one-half the minimum calculated from Table STW (MW 53-C) or Table SSQ (MW 53-C)] plus the minimum breakdown given in Part 2 for the film-coated wire

Copyright National Electrical Manufacturers Association
Provided by IHS under license with NEMA
No reproduction or networking permitted without license from IHS
Not for Resale

SINGLE POLYESTER GLASS FIBER COVERED, HIGH TEMPERATURE ORGANIC VARNISH TREATED, HEAVY FILM COATED RECTANGULAR AND SQUARE COPPER MAGNET WIRE THERMAL CLASS 180

Table STW (MW 53-C)

Maximum Increase in Thickness, Inches (mm), Due to Single Polyester glass Fiber Covering, Heavy Film Coating and High temperature organic Varnish, Rectangular Wire

Nominal Thickness		Nominal Width																													Nominal Thickness	
Millimeters		2.00	2.12	2.24	2.37	2.50	2.65	2.80	3.00	3.15	3.35	3.55	3.75	4.00	4.25	4.50	4.75	5.00	5.30	5.60	6.00	6.30	6.70	7.10	7.50	8.00	8.50	9.00	9.50	10.0	10.6	11.2	11.8	12.5	Inches	Millimeters
	Inches	0.079	† 0.083	0.088	† 0.093	0.098	† 0.104	0.110	† 0.118	0.124	† 0.132	0.140	† 0.148	0.157	† 0.167	0.177	† 0.187	0.197	† 0.209	0.220	† 0.236	0.248	† 0.264	0.280	† 0.295	0.315	† 0.335	0.354	† 0.374	0.394	† 0.417	0.441	† 0.465	0.492		
0.63	0.025																																		0.025	0.63
0.71	0.028																																		0.028	0.71
0.80	0.031																																		0.031	0.80
0.90	0.035																																		0.035	0.90
1.00	0.039	0.010" (0.254 mm)								0.011" (0.279 mm)								0.012" (0.305 mm)							0.013" (0.330 mm)									0.039	1.00
1.12	0.044																																		0.044	1.12
1.25	0.049																																		0.049	1.25
1.40	0.055																																		0.055	1.40
1.60	0.063																																		0.063	1.60
1.80	0.071																																		0.071	1.80
2.00	0.079																																		0.079	2.00
2.24	0.088																																		0.088	2.24
2.50	0.098																																		0.098	2.50
2.80	0.110																																		0.110	2.80
3.15	0.124																																		0.124	3.15
3.55	0.140																																		0.140	3.55
4.00	0.157																																		0.157	4.00
4.50	0.177																																		0.177	4.50
5.00	0.197																																		0.197	5.00
5.60	0.220																																		0.220	5.60

† R-40 Series Intermediate Numbers.

EXAMPLE—Preferred Size ..... 0.055 x 0.110 (R-20 x R-20)
Intermediate Size ... 0.055 x 0.118 (R-20 x R-40)

NOTE I—The maximum increase due to the glass fiber covering shall be permitted to be exceeded provided the overall dimension of the covered wire does not exceed the sum of the maximum thickness of the bare wire plus the maximum increase due to the heavy film coating and single polyester glass fiber covering.

NOTE II—The increase in thickness due to the heavy film coating shall be in accordance with the applicable section for film coated wire in Part 2.

NOTE III—The increase in thickness due to the single polyester glass fiber covering shall be determined by subtracting 0.005 inch (0.127 mm) (maximum thickness of film coating) from the maximum increase in thickness given in the table.

NOTE IV—The increase in width due to the polyester glass fiber covering shall be equal to or less than the maximum increase in thickness given in the table. Note I applies to the increase in width as well as the increase in thickness.

NOTE V—Because it is impossible to accurately separate the polyester glass fiber covering from the film coating, the total minimum increase in the thickness of the film coated polyester glass fiber covered rectangular wire shall be the sum of the minimum increase due to the film coating (as shown for film-coated wire in Part 2) and the minimum increase due to the polyester glass fiber covering. The total minimum increase shall be not less than 70 percent of the maximum increase given in the table above, rounded to the nearest 0.001 inch (0.025 mm).

NOTE VI—For direct conversion of inches to millimeters, multiply inches by the factor 25.4 (exact). (This note approved as Authorized Engineering Information 3-11-1987.)

Copyright National Electrical Manufacturers Association
Provided by IHS under license with NEMA
No reproduction or networking permitted without license from IHS
Not for Resale

9009279 0001652 59T

SINGLE POLYESTER GLASS FIBER COVERED, HIGH TEMPERATURE ORGANIC VARNISH TREATED, HEAVY FILM COATED RECTANGULAR AND SQUARE COPPER MAGNET WIRE THERMAL CLASS 180

Table SSQ (MW 53-C)

Minimum Increase and Maximum Overall Dimensions, Inches (mm), Due to Single Polyester glass Fiber Covering, Heavy Film Coating and High temperature organic Varnish, Square Wire

Square AWG Size	Bare Wire Dimension						Nominal Radii *		Insulation				Square AWG Size
	Minimum		Nominal		Maximum				Minimum Increase in Dimension		Maximum Overall Dimension		
	inches	mm	inches	mm	inches	mm	inches	mm	inches	mm	inches	mm	
0	0.3219	8.176	0.3249	8.252	0.3279	8.329	0.040	1.02	0.009	0.229	0.341	8.661	0
1	0.2864	7.275	0.2893	7.348	0.2922	7.422	0.040	1.02	0.009	0.229	0.305	7.747	1
2	0.2550	6.477	0.2576	6.543	0.2602	6.609	0.040	1.02	0.008	0.203	0.272	6.909	2
3	0.2271	5.768	0.2294	5.827	0.2317	5.885	0.040	1.02	0.008	0.203	0.244	6.198	3
4	0.2023	5.138	0.2043	5.189	0.2063	5.240	0.040	1.02	0.008	0.203	0.219	5.563	4
5	0.1801	4.575	0.1819	4.620	0.1837	4.666	0.040	1.02	0.008	0.203	0.196	4.978	5
6	0.1604	4.074	0.1620	4.115	0.1636	4.155	0.032	0.81	0.008	0.203	0.175	4.445	6
7	0.1429	3.630	0.1443	3.665	0.1457	3.701	0.032	0.81	0.008	0.203	0.157	3.988	7
8	0.1272	3.231	0.1285	3.264	0.1298	3.297	0.032	0.81	0.008	0.203	0.141	3.581	8
9	0.1133	2.878	0.1144	2.906	0.1155	2.934	0.026	0.66	0.008	0.203	0.127	3.226	9
10	0.1009	2.563	0.1019	2.588	0.1029	2.614	0.026	0.66	0.007	0.178	0.113	2.870	10
11	0.0897	2.278	0.0907	2.304	0.0917	2.329	0.020	0.51	0.007	0.178	0.102	2.591	11
12	0.0798	2.027	0.0808	2.052	0.0818	2.078	0.020	0.51	0.007	0.178	0.092	2.337	12
13	0.0710	1.803	0.0720	1.829	0.0730	1.854	0.016	0.41	0.007	0.178	0.084	2.134	13
14	0.0631	1.603	0.0641	1.628	0.0651	1.654	0.016	0.41	0.007	0.178	0.076	1.930	14

* Radii tolerance is plus or minus 25 percent.

NOTE: For direct conversion of inches to millimeters, multiply inches by the factor 25.4 (exact).

Authorized Engineering Information 3-11-1987.

Copyright National Electrical Manufacturers Association
Provided by IHS under license with NEMA
No reproduction or networking permitted without license from IHS
Not for Resale

9009279 0001653 426

DOUBLE POLYESTER GLASS FIBER COVERED, HIGH TEMPERATURE ORGANIC VARNISH TREATED, BARE OR HEAVY FILM COATED RECTANGULAR AND SQUARE COPPER MAGNET WIRE THERMAL CLASS 180

INSULATING MATERIALS. The fiber covering shall consist of a combination of polyester and glass fibers. The glass fibers shall be electrical grade continuous filament glass yarn. The polyester fiber shall be a high grade yarn resulting from the linear polymerization of ethylene glycol and terephthalic acid. The maximum content by weight of polyester fiber in the yarn shall not exceed 50 percent. If an underlying film coating is used, it shall have at least a Class 155 rating. The polyester glass fiber covering shall be wrapped firmly, closely, evenly, and continuously around the wire. Adjacent layers shall be wound in opposite directions. The polyester glass fiber covering shall be fused and treated with a high-temperature non-silicone organic insulating varnish. When specified, either layer may consist of 100 percent glass fiber.

THERMAL CLASS. 180°C as defined in Part 3, para. 3.58.2.2.

GENERAL REQUIREMENTS. See Part 1.

Characteristics	Test Procedure, See Part 3, Paragraph	Requirements
1. DIMENSIONS	3.1.2.2	Rectangular Wire: a. Radii—see Table 1-13 b. Thickness and width tolerances—see Table 1-14 c. Dimensions and increase in thickness—see Table DTW-1 and DTW-2 (MW 53-C) Square Wire: a. Radii—see Table DSQ (MW 53-C) b. Bare size, increase due to insulation—see Table DSQ (MW 53-C)
2. ADHERENCE AND FLEXIBILITY	3.2.2.2.1	Not less than 75 volts/mil (2950 v/mm) of minimum thickness of the polyester glass fiber covering on one side [one-half the minimum calculated from Tables DTW-1, DTW-2 or DSQ (MW 53-C)] over bare wire
	3.2.2.2.2	No cracks visible in the film coating after 20 percent elongation. Examine with normal vision and without removal of polyester glass fiber covering
3. ELONGATION	3.3.2.2	Not less than 32 percent for thicknesses of 0.049 inch (1.25 mm) and greater or 30 percent for thicknesses less than 0.049 inch (1.25 mm)
6. SPRINGBACK	3.6.2.1	Not greater than 5° for Polyester Glass Fiber Covered Bare Not greater than 5.5° for Polyester Glass Fiber Covered Heavy Film Coated Wire
7. DIELECTRIC STRENGTH	3.7.2.2	Not less than 90 volts/mil (3543 v/mm) of the minimum thickness of the polyester glass fiber covering on one side [one-half the minimum calculated from Tables DTW-1, DTW-2, or DSQ (MW 53-C)] plus the minimum breakdown given in Part 2 for the film coating when present

Copyright National Electrical Manufacturers Association
Provided by IHS under license with NEMA
No reproduction or networking permitted without license from IHS
Not for Resale

DOUBLE POLYESTER GLASS FIBER COVERED, HIGH TEMPERATURE ORGANIC VARNISH TREATED, BARE OR HEAVY FILM COATED RECTANGULAR AND SQUARE COPPER MAGNET WIRE THERMAL CLASS 180

Table DTW-1 (MW 53-C)

Maximum Increase in Thickness, Inches (mm) Due to Double Polyester glass fiber Covering and High temperature organic Varnish, Rectangular Wire

Nominal Thickness		Nominal Width																																						Nominal Thickness	
Millimeters	Inches	2.00	2.12	2.24	2.37	2.50	2.65	2.80	3.00	3.15	3.35	3.55	3.75	4.00	4.25	4.50	4.75	5.00	5.30	5.60	6.00	6.30	6.70	7.10	7.50	8.00	8.50	9.00	9.50	10.0	10.6	11.2	11.8	12.5	Inches	Millimeters
		0.079	† 0.083	0.088	† 0.093	0.098	† 0.104	0.110	† 0.118	0.124	† 0.132	0.140	† 0.148	0.157	† 0.167	0.177	† 0.187	0.197	† 0.209	0.220	† 0.236	0.248	† 0.264	0.280	† 0.295	0.315	† 0.335	0.354	† 0.374	0.394	† 0.417	0.441	† 0.465	0.492		
0.63	0.025																																		0.025	0.63
0.71	0.028																																		0.028	0.71
0.80	0.031																																		0.031	0.80
0.90	0.035																																		0.035	0.90
1.00	0.039	0.011" (0.279 mm)								0.012" (0.305 mm)				0.013" (0.330 mm)				0.014" (0.356 mm)				0.015" (0.381 mm)				0.016" (0.406 mm)								0.039	1.00
1.12	0.044																																		0.044	1.12
1.25	0.049																																		0.049	1.25
1.40	0.055																																		0.055	1.40
1.60	0.063																																		0.063	1.60
1.80	0.071																																		0.071	1.80
2.00	0.079																																		0.079	2.00
2.24	0.088																																		0.088	2.24
2.50	0.098																																		0.098	2.50
2.80	0.110									0.013"											0.015"														0.110	2.80
3.15	0.124																																		0.124	3.15
3.55	0.140																																		0.140	3.55
4.00	0.157																																		0.157	4.00
4.50	0.177																0.015"																		0.177	4.50
5.00	0.197																																		0.197	5.00
5.60	0.220																																		0.220	5.60

† R-40 Series Intermediate Numbers.

EXAMPLE—Preferred Size ..... 0.055 x 0.110 (R-20 x R-20)
Intermediate Size ... 0.055 x 0.118 (R-20 x R-40)

NOTE I –The maximum increase due to the polyester glass fiber covering shall be permitted to be exceeded provided the overall dimension of the covered wire does not exceed the sum of the maximum thickness of the bare or film coated wire plus the maximum increase due to the polyester glass fiber covering.

NOTE II—The minimum increase due to the polyester glass fiber covering shall be not less than 70 percent of the maximum shown in the table above, rounded to the nearest 0.001 inch (0.025 mm).

NOTE III—The increase in width due to the polyester glass fiber covering shall be equal to or less than the maximum increase in thickness given in the table. Note I applies to the increase in width as well as the increase in thickness.

NOTE IV—For direct conversion of inches to millimeters, multiply inches by the factor 25.4 (exact). (This note approved as Authorized Engineering Information 3-11-1987.)

Copyright National Electrical Manufacturers Association
Provided by IHS under license with NEMA
No reproduction or networking permitted without license from IHS
Not for Resale

9009279 0001655 2T9

DOUBLE POLYESTER GLASS FIBER COVERED, HIGH TEMPERATURE ORGANIC VARNISH TREATED, BARE OR HEAVY FILM COATED, RECTANGULAR AND SQUARE COPPER MAGNET WIRE THERMAL CLASS 180

Table DTW-2 (MW 53-C)

Maximum Increase in Thickness, Inches (mm), Due to Heavy Film Coating, Double Polyester glass fiber Covering and High temperature organic Varnish, Rectangular Wire

Nominal Thickness		Nominal Width																														Nominal Thickness	
Millimeters	Inches	2.00	2.12	2.24	2.37	2.50	2.65	2.80	3.00	3.15	3.35	3.55	3.75	4.00	4.25	4.50	4.75	5.00	5.30	5.60	6.00	6.30	6.70	7.10	7.50	8.00	8.50	9.00	9.50	10.0	10.6	11.2	11.8	12.5	Inches	Millimeters
		0.079	†0.083	0.088	†0.093	0.098	†0.104	0.110	†0.118	0.124	†0.132	0.140	†0.148	0.157	†0.167	0.177	†0.187	0.197	†0.209	0.220	†0.236	0.248	†0.264	0.280	†0.295	0.315	†0.335	0.354	†0.374	0.394	†0.417	0.441	†0.465	0.492		
0.63	0.025																																		0.025	0.63
0.71	0.028																																		0.028	0.71
0.80	0.031																																		0.031	0.80
0.90	0.035																																		0.035	0.90
1.00	0.039																																		0.039	1.00
1.12	0.044																																		0.044	1.12
1.25	0.049																																		0.049	1.25
1.40	0.055																																		0.055	1.40
1.60	0.063																																		0.063	1.60
1.80	0.071																																		0.071	1.80
2.00	0.079																																		0.079	2.00
2.24	0.088																																		0.088	2.24
2.50	0.098																																		0.098	2.50
2.80	0.110																																		0.110	2.80
3.15	0.124																																		0.124	3.15
3.55	0.140																																		0.140	3.55
4.00	0.157																																		0.157	4.00
4.50	0.177																																		0.177	4.50
5.00	0.197																																		0.197	5.00
5.60	0.220																																		0.220	5.60

0.016" (0.406 mm) 0.017" (0.432 mm) 0.018" (0.457 mm) 0.019" (0.483 mm) 0.020" (0.508 mm) 0.021" (0.533 mm)

0.016" 0.090" 0.090"

† R-40 Series Intermediate Numbers.

EXAMPLE—Preferred Size ..... 0.055 x 0.110 (R-20 x R-20)
Intermediate Size ... 0.055 x 0.118 (R-20 x R-40)

NOTE I—The maximum increase due to the polyester glass fiber covering shall be permitted to be exceeded provided the overall dimension of the covered wire does not exceed the sum of the maximum thickness of the bare wire plus the maximum increase given in Table DTW-2 (MW 53-C).

NOTE II—The increase in thickness due to the heavy film coating shall be in accordance with the applicable section for film coated wire in Part 2.

NOTE III—The minimum increase due to the polyester glass fiber covering shall be not less than 70 percent of the maximum shown in Table DTW-1 (MW 53-C), rounded to the nearest 0.001 inch (0.025 mm).

NOTE IV—The increase in width due to the polyester glass fiber covering shall be equal to or less than the maximum increase in thickness given in Table DTW-1 (MW 53-C). Note I applies to the increase in width as well as the increase in thickness.

NOTE V—Because it is impossible to accurately separate the polyester glass fiber covering from the film coating, the total minimum increase in the thickness of a film and fiber covered rectangular wire shall be the sum of the minimum increase due to the film coating (as shown for film coated wire in Part 2) and the minimum increase due to the polyester glass fiber covering. The total minimum increase shall be not less than 70 percent of the maximum increase given in Table DTW-1 (MW 53-C) plus the minimum for the film coated wire, rounded to the nearest 0.001 inch (0.025 mm).

NOTE VI—For direct conversion of inches to millimeters, multiply inches by the factor 25.4 (exact). (This note approved as Authorized Engineering Information 3-11-1987.)

Copyright National Electrical Manufacturers Association
Provided by IHS under license with NEMA
No reproduction or networking permitted without license from IHS
Not for Resale

DOUBLE POLYESTER GLASS FIBER COVERED, HIGH TEMPERATURE ORGANIC VARNISH TREATED, BARE OR HEAVY FILM COATED, RECTANGULAR AND SQUARE COPPPER MAGNET WIRE THERMAL CLASS 180

Table DSQ (MW 53-C)

Minimum Increase and Maximum Overall Dimensions, Inches (mm), Due to Double Polyester glass Fiber Covering and High temperature organic Varnish, Square Wire

Square AWG Size	Bare Wire Dimensions						Nominal Radii *		Bare Double polyester glass fiber covered Wire				Heavy film coated Double polyester glass fiber covered Wire			
	Minimum		Nominal		Maximum				Minimum Increase in Dimension		Maximum Overall Dimension		Minimum Increase in Dimension		Maximum Overall Dimension	
	inches	mm	inches	mm	inches	mm	inches	mm	inches	mm	inches	mm	inches	mm	inches	mm
0	0.3219	8.176	0.3249	8.252	0.3279	8.329	0.040	1.02	0.012	0.305	0.344	8.738	0.015	0.381	0.349	8.865
1	0.2864	7.275	0.2893	7.348	0.2922	7.422	0.040	1.02	0.012	0.305	0.306	7.823	0.015	0.381	0.313	7.950
2	0.2550	6.477	0.2576	6.543	0.2602	6.609	0.040	1.02	0.012	0.305	0.276	7.010	0.015	0.381	0.281	7.137
3	0.2271	5.768	0.2294	5.827	0.2317	5.885	0.040	1.02	0.012	0.305	0.248	6.299	0.015	0.381	0.253	6.426
4	0.2023	5.138	0.2043	5.189	0.2063	5.240	0.040	1.02	0.012	0.305	0.222	5.639	0.015	0.381	0.227	5.766
5	0.1801	4.575	0.1819	4.620	0.1837	4.666	0.040	1.02	0.011	0.279	0.199	5.055	0.014	0.356	0.204	5.182
6	0.1604	4.074	0.1620	4.115	0.1636	4.155	0.032	0.81	0.011	0.279	0.179	4.547	0.014	0.356	0.184	4.674
7	0.1429	3.630	0.1443	3.665	0.1457	3.701	0.032	0.81	0.010	0.254	0.160	4.064	0.013	0.330	0.165	4.191
8	0.1272	3.231	0.1285	3.264	0.1298	3.297	0.032	0.81	0.009	0.229	0.143	3.632	0.012	0.305	0.148	3.759
9	0.1133	2.878	0.1144	2.906	0.1155	2.934	0.026	0.66	0.009	0.229	0.129	3.277	0.012	0.305	0.134	3.404
10	0.1009	2.563	0.1019	2.588	0.1029	2.614	0.026	0.66	0.008	0.203	0.115	2.921	0.011	0.279	0.120	3.048
11	0.0897	2.278	0.0907	2.304	0.0917	2.329	0.020	0.51	0.008	0.203	0.103	2.616	0.011	0.279	0.108	2.743
12	0.0798	2.027	0.0808	2.052	0.0818	2.078	0.020	0.51	0.008	0.203	0.093	2.362	0.011	0.279	0.098	2.489
13	0.0710	1.803	0.0720	1.829	0.0730	1.854	0.016	0.41	0.008	0.203	0.084	2.134	0.011	0.279	0.089	2.261
14	0.0631	1.603	0.0641	1.628	0.0651	1.654	0.016	0.41	0.008	0.203	0.076	1.930	0.011	0.279	0.081	2.057

* Radii tolerance is plus or minus 25 percent.

NOTE: For direct conversion inches to millimeters, multiply inches by the factor 25.4 (exact). (This note approved as Authorized Engineering Information 3-11-1987.)

Copyright National Electrical Manufacturers Association
Provided by IHS under license with NEMA
No reproduction or networking permitted without license from IHS
Not for Resale

9009279 0001657 071

AROMATIC POLYAMIDE PAPER COVERED RECTANGULAR AND SQUARE ALUMINUM MAGNET WIRE THERMAL CLASS 220

INSULATING MATERIALS. The insulating material shall be an aromatic polyamide paper. The paper covering shall consist of one or more tapes, each wrapped firmly, closely, evenly, and continuously around the wire in a configuration necessary to provide the specified number of tape layers (thicknesses of paper). The paper covering shall consist of at least two thicknesses of paper with not less than 40-percent overlap. If an adhesive is used, this material shall perform in the applicable insulation system as required in Part 3, para. 3.58.1.2.

THERMAL CLASS. 220°C as defined in Part 3, para. 3.58.2.2.

GENERAL REQUIREMENTS. See Part 1.

Characteristics	Test Procedure, See Part 3, Paragraph	Requirements
1. DIMENSIONS	3.1.2.2	Rectangular Wire: a. Radii—see Table 1-13 b. Thickness and width tolerances—see Table 1-14 c. Increase in thickness and width due to paper covering—see Table TW (MW 60-A). Square wire: Bare wire dimensions and tolerances, radii and increase in dimensions due to paper covering—see Tables SQ-2 (MW 60-A) for two thicknesses of paper and SQ-3 (MW 60-A) for three thicknesses of paper The increase in thickness for coverings having more than three thicknesses of paper shall be as follows: $\text{Minimum increase in thickness} = 2\left(\text{Number of paper thicknesses} - 1\right)\left(\text{Nominal tape thickness}\right)$ $\text{Maximum increase in thickness} = 2\left(\text{Number of paper thicknesses} + 1\right)\left(\text{Nominal tape thickness}\right)$
3. ELONGATION	3.3.2.2	Not less than 15 percent
6. SPRINGBACK	3.6.2.1	Not greater than 4.5°
7. DIELECTRIC STRENGTH	3.7.2.2	Not less than 300 volts/mil (11800 v/mm) of the minimum thickness of the paper covering on one side (one half the minimum increase)
11. COVERAGE	3.11.2.2	Covering shall not loosen appreciably nor open sufficiently to expose the bare wire after bending around a mandrel having a diameter 6 times the thickness of the bare wire

Copyright National Electrical Manufacturers Association
Provided by IHS under license with NEMA
No reproduction or networking permitted without license from IHS
Not for Resale

AROMATIC POLYAMIDE PAPER COVERED RECTANGULAR AND SQUARE ALUMINUM MAGNET WIRE THERMAL CLASS 220

Table TW (MW 60-A) Rectangular

Increase in Thickness Due to Aromatic polyamide paper Covering

Number of Thicknesses of Paper	Nominal Tape Thickness, 0.002 inch (0.051 mm) Increase in Thickness				Nominal Tape Thickness, 0.003 inch (0.076 mm) Increase in Thickness			
	Minimum		Maximum		Minimum		Maximum	
	inches	mm	inches	mm	inches	mm	inches	mm
2	0.004	0.102	0.012	0.305	0.006	0.152	0.018	0.457
3	0.008	0.203	0.016	0.406	0.012	0.305	0.024	0.610

NOTE I—The increase in width due to the paper covering shall be equal to or less than the increase in thickness.

NOTE II—The maximum increase in thickness or width due to the paper covering may be exceeded provided the overall dimension of the covered wire does not exceed the sum of the maximum thickness or width of the bare wire plus the maximum increase due to the paper covering.

NOTE III—The increase due to the paper covering for wires having dimensions not shown in Table 1-13 (Part 1) shall be the same as those for the next larger thickness or width.

Table SQ-2 (MW 60-A)

Minimum Increase and Maximum Overall Dimensions of Aromatic polyamide paper covered Bare Square Wire, Two Thicknesses of Aromatic polyamide Paper

Square AWG Size	Bare Wire Dimensions						Nominal Radii *		Nominal Tape Thickness, 0.002 inch (0.051 mm)				Nominal Tape Thickness, 0.003 inch (0.076 mm)			
	Minimum		Nominal		Maximum				Minimum Increase in Dimension		Maximum Overall Dimension †		Minimum Increase in Dimension		Maximum Overall Dimension †	
	inches	mm	inches	mm	inches	mm	inches	mm	inches	mm	inches	mm	inches	mm	inches	mm
0	0.3219	8.176	0.3249	8.252	0.3279	8.329	0.040	1.016	0.004	0.102	0.3399	8.633	0.006	0.152	0.3459	8.786
1	0.2864	7.275	0.2893	7.348	0.2922	7.422	0.040	1.016	0.004	0.102	0.3042	7.727	0.006	0.152	0.3102	7.879
2	0.2550	6.477	0.2576	6.543	0.2602	6.609	0.040	1.016	0.004	0.102	0.2722	6.914	0.006	0.152	0.2782	7.066
3	0.2271	5.768	0.2294	5.827	0.2317	5.885	0.040	1.016	0.004	0.102	0.2437	6.190	0.006	0.152	0.2497	6.342
4	0.2023	5.138	0.2043	5.189	0.2063	5.240	0.040	1.016	0.004	0.102	0.2183	5.545	0.006	0.152	0.2243	5.697
5	0.1801	4.575	0.1819	4.620	0.1837	4.666	0.040	1.016	0.004	0.102	0.1957	4.971	0.006	0.152	0.2017	5.123
6	0.1604	4.074	0.1620	4.115	0.1636	4.155	0.032	0.813	0.004	0.102	0.1756	4.460	0.006	0.152	0.1816	4.613
7	0.1429	3.630	0.1443	3.665	0.1457	3.701	0.032	0.813	0.004	0.102	0.1577	4.006	0.006	0.152	0.1637	4.158
8	0.1272	3.231	0.1285	3.264	0.1298	3.297	0.032	0.813	0.004	0.102	0.1418	3.602	0.006	0.152	0.1478	3.759
9	0.1133	2.878	0.1144	2.906	0.1155	2.934	0.026	0.660	0.004	0.102	0.1275	3.238	0.006	0.152	0.1335	3.391
10	0.1009	2.563	0.1019	2.588	0.1029	2.614	0.026	0.660	0.004	0.102	0.1149	2.918	0.006	0.152	0.1209	3.071
11	0.0897	2.278	0.0907	2.304	0.0917	2.329	0.020	0.508	0.004	0.102	0.1037	2.639	0.006	0.152	0.1097	2.786
12	0.0798	2.027	0.0808	2.052	0.0818	2.078	0.020	0.508	0.004	0.102	0.0938	2.383	0.006	0.152	0.0998	2.535
13	0.0710	1.803	0.0720	1.829	0.0730	1.854	0.016	0.406	0.004	0.102	0.0850	2.159	0.006	0.152	0.0910	2.311
14	0.0631	1.603	0.0641	1.628	0.0651	1.654	0.016	0.406	0.004	0.102	0.0771	1.958	0.006	0.152	0.0831	2.111

Table SQ-3 (MW 60-A)

Minimum Increase and Maximum Overall Dimensions of Aromatic polyamide paper covered Bare Square Wire, Three Thicknesses of Aromatic polyamide Paper

Square AWG Size	Bare Wire Dimensions						Nominal Radii *		Nominal Tape Thickness 0.002 inch (0.051 mm)				Nominal Tape Thickness 0.003 inch (0.076 mm)			
	Minimum		Nominal		Maximum				Minimum Increase in Dimension		Maximum Overall Dimension †		Minimum Increase in Dimension		Maximum Overall Dimension †	
	inches	mm	inches	mm	inches	mm	inches	mm	inches	mm	inches	mm	inches	mm	inches	mm
0	0.3219	8.176	0.3249	8.252	0.3279	8.329	0.040	1.016	0.008	0.203	0.3439	8.735	0.012	0.305	0.3519	8.938
1	0.2864	7.275	0.2893	7.348	0.2922	7.422	0.040	1.016	0.008	0.203	0.3082	7.828	0.012	0.305	0.3162	8.031
2	0.2550	6.477	0.2576	6.543	0.2602	6.609	0.040	1.016	0.008	0.203	0.2762	7.015	0.012	0.305	0.2842	7.219
3	0.2271	5.768	0.2294	5.827	0.2317	5.885	0.040	1.016	0.008	0.203	0.2477	6.292	0.012	0.305	0.2557	6.495
4	0.2023	5.138	0.2043	5.189	0.2063	5.240	0.040	1.016	0.008	0.203	0.2223	5.646	0.012	0.305	0.2303	5.850
5	0.1801	4.575	0.1819	4.620	0.1837	4.666	0.040	1.016	0.008	0.203	0.1997	5.072	0.012	0.305	0.2077	5.276
6	0.1604	4.074	0.1620	4.115	0.1636	4.155	0.032	0.813	0.008	0.203	0.1796	4.562	0.012	0.305	0.1876	4.765
7	0.1429	3.630	0.1443	3.665	0.1457	3.701	0.032	0.813	0.008	0.203	0.1617	4.107	0.012	0.305	0.1697	4.310
8	0.1272	3.231	0.1285	3.264	0.1298	3.297	0.032	0.813	0.008	0.203	0.1458	3.703	0.012	0.305	0.1538	3.907
9	0.1133	2.878	0.1144	2.906	0.1155	2.934	0.026	0.660	0.008	0.203	0.1315	3.340	0.012	0.305	0.1395	3.543
10	0.1009	2.563	0.1019	2.588	0.1029	2.614	0.026	0.660	0.008	0.203	0.1189	3.020	0.012	0.305	0.1269	3.223
11	0.0897	2.278	0.0907	2.304	0.0917	2.329	0.020	0.508	0.008	0.203	0.1077	2.736	0.012	0.305	0.1157	2.939
12	0.0798	2.027	0.0808	2.052	0.0818	2.078	0.020	0.508	0.008	0.203	0.0978	2.484	0.012	0.305	0.1058	2.687
13	0.0710	1.803	0.0720	1.829	0.0730	1.854	0.016	0.406	0.008	0.203	0.0890	2.261	0.012	0.305	0.0970	2.464
14	0.0631	1.603	0.0641	1.628	0.0651	1.654	0.016	0.406	0.008	0.203	0.0811	2.060	0.012	0.305	0.0891	2.263

* Radii tolerance is plus or minus 25 percent.

† The maximum overall dimensions have been calculated in accordance with the following:

AWG Size	Maximum Increase Due to Two Thicknesses of Paper		Maximum Increase Due to Three Thicknesses of Paper	
	Tape Thickness		Tape Thickness	
	0.002 inch (0.051 mm)	0.003 inch (0.076 mm)	0.002 inch (0.051 mm)	0.003 inch (0.076 mm)
0-14	0.012 inch (0.305 mm)	0.018 inch (0.457 mm)	0.016 inch (0.406 mm)	0.024 inch (0.610 mm)

NOTE—The increase due to the paper covering for wires having dimensions not shown shall be the same as for the next larger size.

NOTE: For direct conversion inches to millimeters, multiply inches by the factor 25.4 (exact). (This note approved as Authorized Engineering Information 3-11-1987.)

Copyright National Electrical Manufacturers Association
Provided by IHS under license with NEMA
No reproduction or networking permitted without license from IHS
Not for Resale

9009279 0001659 944

AROMATIC POLYAMIDE PAPER COVERED RECTANGULAR AND SQUARE COPPER MAGNET WIRE THERMAL CLASS 200

INSULATING MATERIALS. The insulating material shall be an aromatic polyamide paper. The paper covering shall consist of one or more tapes, each wrapped firmly, closely, evenly, and continuously around the wire in a configuration necessary to provide the specified number of tape layers (thicknesses of paper). The paper covering shall consist of at least two thicknesses of paper with not less than 40-percent overlap. If an adhesive is used, this material shall perform in the applicable insulation system as required in Part 3, para. 3.58.1.2.

THERMAL CLASS. 200°C as defined in Part 3, para. 3.58.2.2.

GENERAL REQUIREMENTS. See Part 1.

Characteristics	Test Procedure, See Part 3, Paragraph	Requirements
1. DIMENSIONS	3.1.2.2	Rectangular Wire: a. Dimensions and radii—see Table 1-13 b. Thickness and width tolerances—see Table 1-14 c. Increase in thickness and width due to paper covering—see Table TW (MW 60-C). Square wire: Bare wire dimensions and tolerances, radii and increase in dimensions due to paper covering—see Tables SQ-2 (MW 60-C) for two thicknesses of paper and SQ-3 (MW 60-C) for three thickness of paper The increase in thickness for coverings having more than three thicknesses of paper shall be as follows: $\text{Minimum increase in thickness} = 2\left(\text{Number of paper thicknesses} - 1\right)\left(\text{Nominal tape thickness}\right)$ $\text{Maximum increase in thickness} = 2\left(\text{Number of paper thicknesses} + 1\right)\left(\text{Nominal tape thickness}\right)$
3. ELONGATION	3.3.2.2	Not less than 32 percent for thicknesses of 0.049 inch (1.25 mm and greater or 30 percent for thicknesses less than 0.049 inch (1.25 mm)
6. SPRINGBACK	3.6.2.1	Not greater than 5.5°
7. DIELECTRIC STRENGTH	3.7.2.2	Not less than 300 volts/mil (11800 v/mm) of the minimum thickness of the paper covering on one side (one half the minimum increase)
11. COVERAGE	3.11.2.2	Covering shall not loosen appreciably nor open sufficiently to expose the bare wire after bending around a mandrel having a diameter 6 times the thickness of the bare wire

Copyright National Electrical Manufacturers Association
Provided by IHS under license with NEMA
No reproduction or networking permitted without license from IHS
Not for Resale

AROMATIC POLYAMIDE PAPER COVERED RECTANGULAR AND SQUARE COPPER MAGNET WIRE THERMAL CLASS 200

Table TW (MW 60-C) Rectangular

Increase in Thickness Due to Aromatic polyamide paper Covering

Number of Thicknesses of Paper	Nominal Tape Thickness, 0.002 inch (0.051 mm) Increase in Thickness				Nominal Tape Thickness, 0.003 inch (0.076 mm) Increase in Thickness			
	Minimum		Maximum		Minimum		Maximum	
	inches	mm	inches	mm	inches	mm	inches	mm
2	0.004	0.102	0.012	0.305	0.006	0.152	0.018	0.457
3	0.008	0.203	0.016	0.406	0.012	0.305	0.024	0.610

NOTE I—The increase in width due to the paper covering shall be equal to or less than the increase in thickness.

NOTE II—The maximum increase in thickness or width due to the paper covering may be exceeded provided the overall dimension of the covered wire does not exceed the sum of the maximum thickness or width of the bare wire plus the maximum increase due to the paper covering.

NOTE III—The increase due to the paper covering for wires having dimensions not shown in Table 1-13 shall be the same as those for the next larger thickness or width.

Table SQ-2 (MW 60-C)

Minimum Increase and Maximum Overall Dimensions of Aromatic polyamide paper covered Bare Square Wire, Two Thicknesses of Aromatic polyamide Paper

Square AWG Size	Bare Wire Dimension Minimum		Nominal		Maximum		Nominal Radii *		Nominal Tape Thickness 0.002 inch (0.051 mm) Minimum Increase in Dimension		Nominal Tape Thickness 0.002 inch (0.051 mm) Maximum Overall Dimension †		Nominal Tape Thickness 0.003 inch (0.076 mm) Minimum Increase in Dimension		Nominal Tape Thickness 0.003 inch (0.076 mm) Maximum Overall Dimension †	
	inches	mm	inches	mm	inches	mm	inches	mm	inches	mm	inches	mm	inches	mm	inches	mm
0	0.3219	8.176	0.3249	8.252	0.3279	8.329	0.040	1.016	0.004	0.102	0.3399	8.633	0.006	0.152	0.3459	8.786
1	0.2864	7.275	0.2893	7.348	0.2922	7.422	0.040	1.016	0.004	0.102	0.3042	7.727	0.006	0.152	0.3102	7.879
2	0.2550	6.477	0.2576	6.543	0.2602	6.609	0.040	1.016	0.004	0.102	0.2722	6.914	0.006	0.152	0.2782	7.066
3	0.2271	5.768	0.2294	5.827	0.2317	5.885	0.040	1.016	0.004	0.102	0.2437	6.190	0.006	0.152	0.2497	6.342
4	0.2023	5.138	0.2043	5.189	0.2063	5.240	0.040	1.016	0.004	0.102	0.2183	5.545	0.006	0.152	0.2243	5.697
5	0.1801	4.575	0.1819	4.620	0.1837	4.666	0.040	1.016	0.004	0.102	0.1957	4.971	0.006	0.152	0.2017	5.123
6	0.1604	4.074	0.1620	4.115	0.1636	4.155	0.032	0.813	0.004	0.102	0.1756	4.460	0.006	0.152	0.1816	4.613
7	0.1429	3.630	0.1443	3.665	0.1457	3.701	0.032	0.813	0.004	0.102	0.1577	4.006	0.006	0.152	0.1637	4.158
8	0.1272	3.231	0.1285	3.264	0.1298	3.297	0.032	0.813	0.004	0.102	0.1418	3.602	0.006	0.152	0.1478	3.758
9	0.1133	2.878	0.1144	2.906	0.1155	2.934	0.026	0.660	0.004	0.102	0.1275	3.233	0.006	0.152	0.1335	3.391
10	0.1009	2.563	0.1019	2.588	0.1029	2.614	0.026	0.660	0.004	0.102	0.1149	2.918	0.006	0.152	0.1209	3.071
11	0.0897	2.278	0.0907	2.304	0.0917	2.329	0.020	0.508	0.004	0.102	0.1037	2.634	0.006	0.152	0.1097	2.786
12	0.0798	2.027	0.0808	2.052	0.0818	2.078	0.020	0.508	0.004	0.102	0.0938	2.383	0.006	0.152	0.0998	2.535
13	0.0710	1.803	0.0720	1.829	0.0730	1.854	0.016	0.406	0.004	0.102	0.0850	2.159	0.006	0.152	0.0910	2.311
14	0.0631	1.603	0.0641	1.628	0.0651	1.654	0.016	0.406	0.004	0.102	0.0771	1.958	0.006	0.152	0.0831	2.111

Table SQ-3 (MW 60-C)

Minimum Increase and Maximum Overall Dimensions of Aromatic polyamide paper covered Bare Square Wire, Three Thicknesses of Aromatic polyamide Paper

Square AWG Size	Bare Wire Dimensions Minimum		Nominal		Maximum		Nominal Radii *		Nominal Tape Thickness 0.002 inch (0.051 mm) Minimum Increase in Dimension		Nominal Tape Thickness 0.002 inch (0.051 mm) Maximum Overall Dimension †		Nominal Tape Thickness 0.003 inch (0.076 mm) Minimum Increase in Dimension		Nominal Tape Thickness 0.003 inch (0.076 mm) Maximum Overall Dimension †	
	inches	mm	inches	mm	inches	mm	inches	mm	inches	mm	inches	mm	inches	mm	inches	mm
0	0.3219	8.176	0.3249	8.252	0.3279	8.329	0.040	1.016	0.008	0.203	0.3439	8.735	0.012	0.305	0.3519	8.938
1	0.2864	7.275	0.2893	7.348	0.2922	7.422	0.040	1.016	0.008	0.203	0.3082	7.828	0.012	0.305	0.3162	8.031
2	0.2550	6.477	0.2576	6.543	0.2602	6.609	0.040	1.016	0.008	0.203	0.2762	7.015	0.012	0.305	0.2842	7.219
3	0.2271	5.768	0.2294	5.827	0.2317	5.885	0.040	1.016	0.008	0.203	0.2477	6.292	0.012	0.305	0.2557	6.495
4	0.2023	5.138	0.2043	5.189	0.2063	5.240	0.040	1.016	0.008	0.203	0.2223	5.646	0.012	0.305	0.2303	5.850
5	0.1801	4.575	0.1819	4.620	0.1837	4.666	0.040	1.016	0.008	0.203	0.1997	5.072	0.012	0.305	0.2077	5.276
6	0.1604	4.074	0.1620	4.115	0.1636	4.155	0.032	0.813	0.008	0.203	0.1796	4.562	0.012	0.305	0.1876	4.765
7	0.1429	3.630	0.1443	3.665	0.1457	3.701	0.032	0.813	0.008	0.203	0.1617	4.107	0.012	0.305	0.1697	4.310
8	0.1272	3.231	0.1285	3.264	0.1298	3.297	0.032	0.813	0.008	0.203	0.1458	3.703	0.012	0.305	0.1538	3.907
9	0.1133	2.878	0.1144	2.906	0.1155	2.934	0.026	0.660	0.008	0.203	0.1315	3.340	0.012	0.305	0.1395	3.543
10	0.1009	2.563	0.1019	2.588	0.1029	2.614	0.026	0.660	0.008	0.203	0.1189	3.020	0.012	0.305	0.1269	3.223
11	0.0897	2.278	0.0907	2.304	0.0917	2.329	0.020	0.508	0.008	0.203	0.1077	2.736	0.012	0.305	0.1157	2.939
12	0.0798	2.027	0.0808	2.052	0.0818	2.078	0.020	0.508	0.008	0.203	0.0978	2.484	0.012	0.305	0.1058	2.687
13	0.0710	1.803	0.0720	1.829	0.0730	1.854	0.016	0.406	0.008	0.203	0.0890	2.261	0.012	0.305	0.0970	2.464
14	0.0631	1.603	0.0641	1.628	0.0651	1.654	0.016	0.406	0.008	0.203	0.0811	2.060	0.012	0.305	0.0891	2.263

* Radii tolerance is plus or minus 25 percent.

† The maximum overall dimensions have been calculated in accordance with the following:

AWG Size	Maximum Increase Due to Two Thicknesses of Paper Tape Thickness		Maximum Increase Due to Three Thicknesses of Paper Tape Thickness	
	0.002 inch (0.051 mm)	0.003 inch (0.076 mm)	0.002 inch (0.051 mm)	0.003 inch (0.076 mm)
0-14	0.012 inch (0.305 mm)	0.018 inch (0.457 mm)	0.016 inch (0.406 mm)	0.024 inch (0.610 mm)

NOTE—The increase due to the paper covering for wires having dimensions not shown shall be the same as for the next larger size.

NOTE: For direct conversion inches to millimeters, multiply inches by the factor 25.4 (exact). (This note approved as Authorized Engineering Information 3-11-1987.)

Copyright National Electrical Manufacturers Association
Provided by IHS under license with NEMA
No reproduction or networking permitted without license from IHS
Not for Resale

9009279 0001661 5T2

AROMATIC POLYAMIDE PAPER COVERED ROUND ALUMINUM MAGNET WIRE THERMAL CLASS 220

INSULATING MATERIALS. The insulating material shall be an aromatic polyamide paper. The paper covering shall consist of one or more tapes, each wrapped firmly, closely, evenly, and continuously around the wire in a configuration necessary to provide the specified number of tape layers (thicknesses of paper). The paper covering shall consist of at least two thicknesses of paper with not less than 40-percent overlap. If an adhesive is used, this material shall perform in the applicable insulation system as required in Part 3, para. 3.58.1.2.

THERMAL CLASS. 220°C as defined in Part 3, para. 3.58.1.2.

GENERAL REQUIREMENTS. See Part 1.

Characteristics	Test Procedure, See Part 3, Paragraph	Requirements
1. DIMENSIONS	3.1.1.2	See Tables 2 and 3 (MW 61-A) for wire having two and three thicknesses of paper, respectively. The increase in diameter for coverings having more than three thicknesses of paper shall be as specified below: $\text{Minimum increase in diameter} = 2\left(\text{Number of paper thicknesses} - 1\right)\left(\text{Nominal tape thickness}\right)$ $\text{Maximum increase in diameter} = 2\left(\text{Number of paper thicknesses} + 1\right)\left(\text{Nominal tape thickness}\right)$
2. ADHERENCE AND FLEXIBILITY	3.2.1.2	Covering shall not open sufficiently to expose the bare wire, nor shall it be possible to slide the paper along the wire when tested in accordance with 2.1.2.3 Covering shall not open sufficiently to expose the bare wire, nor shall the covering show any tearing when tested in accordance with 2.1.2.1
3. ELONGATION	3.3.1.2	Not less than 15 percent
6. SPRINGBACK	3.6.2.1	Not greater than 4.5°
7. DIELECTRIC STRENGTH	3.7.1.2	Not less than 300 volts/mil (11800 v/mm) of the minimum thickness of the paper covering on one side (one half the minimum increase)
11. COVERAGE	3.11.1.2	Covering shall not loosen appreciably nor open sufficiently to expose the bare wire after bending on a 6d mandrel

Copyright National Electrical Manufacturers Association
Provided by IHS under license with NEMA
No reproduction or networking permitted without license from IHS
Not for Resale

9009279 0001662 439

AROMATIC POLYAMIDE PAPER COVERED ROUND ALUMINUM MAGNET WIRE THERMAL CLASS 220

Table 2 (MW 61-A)

Dimensions—Sizes 4/0 to 9 AWG
Two Thicknesses of Aromatic polyamide Paper

AWG Size	Bare Wire Diameter, Inches †			Nominal Tape Thickness 0.002 inch (0.051 mm)				Nominal Tape Thickness 0.003 inch (0.076 mm)				AWG Size
				Minimum Increase in Diameter		Maximum Overall Diameter ‡		Minimum Increase in Diameter		Maximum Overall Diameter ‡		
	Minimum	Nominal	Maximum	inches	mm	inches	mm	inches	mm	inches	mm	
4/0	0.4554	0.4600	0.4646	0.0040	0.102	0.4766	12.106	0.0060	0.152	0.4826	12.258	4/0
3/0	0.4055	0.4096	0.4137	0.0040	0.102	0.4257	10.813	0.0060	0.152	0.4317	10.965	3/0
2/0	0.3612	0.3648	0.3684	0.0040	0.102	0.3804	9.662	0.0060	0.152	0.3864	9.815	2/0
1/0	0.3217	0.3249	0.3281	0.0040	0.102	0.3401	8.639	0.0060	0.152	0.3461	8.791	1/0
1	0.2864	0.2893	0.2922	0.0040	0.102	0.3042	7.727	0.0060	0.152	0.3102	7.879	1
2	0.2550	0.2576	0.2602	0.0040	0.102	0.2722	6.914	0.0060	0.152	0.2782	7.066	2
3	0.2271	0.2294	0.2317	0.0040	0.102	0.2437	6.190	0.0060	0.152	0.2497	6.342	3
4	0.2023	0.2043	0.2053 *	0.0040	0.102	0.2173	5.519	0.0060	0.152	0.2233	5.672	4
5	0.1801	0.1819	0.1828 *	0.0040	0.102	0.1948	4.948	0.0060	0.152	0.2008	5.100	5
6	0.1604	0.1620	0.1628 *	0.0040	0.102	0.1748	4.440	0.0060	0.152	0.1808	4.592	6
7	0.1429	0.1443	0.1450 *	0.0040	0.102	0.1570	3.988	0.0060	0.152	0.1630	4.140	7
8	0.1272	0.1285	0.1292 *	0.0040	0.102	0.1412	3.586	0.0060	0.152	0.1472	3.739	8
9	0.1133	0.1144	0.1150 *	0.0040	0.102	0.1270	3.226	0.0060	0.152	0.1330	3.378	9

NOTE: For direct conversion inches to millimeters, multiply inches by the factor 25.4 (exact).

Authorized Engineering Information 3-11-1987.

Table 3 (MW 61-A)

Dimensions—Sizes 4/0 to 9 AWG
Three Thicknesses of Aromatic polyamide Paper

AWG Size	Bare Wire Diameter, Inches †			Nominal Tape Thickness 0.002 inch (0.051 mm)				Nominal Tape Thickness 0.003 inch (0.076 mm)				AWG Size
				Minimum Increase in Diameter		Maximum Overall Diameter ‡		Minimum Increase in Diameter		Maximum Overall Diameter ‡		
	Minimum	Nominal	Maximum	inches	mm	inches	mm	inches	mm	inches	mm	
4/0	0.4554	0.4600	0.4646	0.0080	0.203	0.4806	12.207	0.0120	0.305	0.4886	12.410	4/0
3/0	0.4055	0.4096	0.4137	0.0080	0.203	0.4297	10.914	0.0120	0.305	0.4377	11.118	3/0
2/0	0.3612	0.3648	0.3684	0.0080	0.203	0.3844	9.764	0.0120	0.305	0.3924	9.967	2/0
1/0	0.3217	0.3249	0.3281	0.0080	0.203	0.3441	8.740	0.0120	0.305	0.3521	8.943	1/0
1	0.2864	0.2893	0.2922	0.0080	0.203	0.3082	7.828	0.0120	0.305	0.3162	8.031	1
2	0.2550	0.2576	0.2602	0.0080	0.203	0.2762	7.015	0.0120	0.305	0.2842	7.219	2
3	0.2271	0.2294	0.2317	0.0080	0.203	0.2477	6.292	0.0120	0.305	0.2557	6.495	3
4	0.2023	0.2043	0.2053 *	0.0080	0.203	0.2213	5.621	0.0120	0.305	0.2293	5.824	4
5	0.1801	0.1819	0.1828 *	0.0080	0.203	0.1988	5.050	0.0120	0.305	0.2068	5.253	5
6	0.1604	0.1620	0.1628 *	0.0080	0.203	0.1788	4.542	0.0120	0.305	0.1868	4.745	6
7	0.1429	0.1443	0.1450 *	0.0080	0.203	0.1610	4.089	0.0120	0.305	0.1690	4.293	7
8	0.1272	0.1285	0.1292 *	0.0080	0.203	0.1452	3.688	0.0120	0.305	0.1532	3.891	8
9	0.1133	0.1144	0.1150 *	0.0080	0.203	0.1310	3.327	0.0120	0.305	0.1390	3.531	9

*This maximum bare wire diameter shall be permitted to be exceeded: see 1.4.9.1.

† For metric equivalents, see 1.5.

‡ The maximum overall diameters have been calculated in accordance with the following:

AWG Size	Maximum Increase Due to Two Thicknesses of Paper		Maximum Increase Due to Three Thicknesses of Paper	
	Tape Thickness	Tape Thickness	Tape Thickness	Tape Thickness
	0.002 inch (0.051 mm)	0.003 inch (0.076 mm)	0.002 inch (0.051 mm)	0.003 inch (0.076 mm)
4/0-9	0.012 inch (0.305 mm)	0.018 inch (0.457 mm)	0.016 inch (0.406 mm)	0.024 inch (0.610 mm)

NOTE: For direct conversion inches to millimeters, multiply inches by the factor 25.4 (exact). (This note approved as Authorized Engineering Information 3-11-1987.)

Copyright National Electrical Manufacturers Association
Provided by IHS under license with NEMA
No reproduction or networking permitted without license from IHS
Not for Resale

9009279 0001663 375

AROMATIC POLYAMIDE PAPER COVERED ROUND COPPER MAGNET WIRE THERMAL CLASS 200

INSULATING MATERIALS. The insulating material shall be an aromatic polyamide paper. The paper covering shall consist of one or more tapes, each wrapped firmly, closely, evenly, and continuously around the wire in a configuration necessary to provide the specified number of tape layers (thicknesses of paper). The paper covering shall consist of at least two thicknesses of paper with not less than 40-percent overlap. If an adhesive is used, this material shall perform in the applicable insulation system as required in Part 3, para. 3.58.1.2.

THERMAL CLASS. 200°C as defined in Part 3, para. 3.58.1.2.

GENERAL REQUIREMENTS. See Part 1.

Characteristics	Test Procedure, See Part 3, Paragraph	Requirements
1. DIMENSIONS	3.1.1.2	See Tables 2 and 3 (MW 61-C) for wire having two and three thicknesses of paper, respectively. The increase in diameter for coverings having more than three thicknesses of paper shall be as specified below: $\text{Minimum increase in diameter} = 2\left(\text{Number of paper thicknesses} - 1\right)\left(\text{Nominal tape thickness}\right)$ $\text{Maximum increase in diameter} = 2\left(\text{Number of paper thicknesses} + 1\right)\left(\text{Nominal tape thickness}\right)$
2. ADHERENCE AND FLEXIBILITY	3.2.1.2.1	Covering shall not open sufficiently to expose the bare wire, nor shall the covering show any tearing
	3.2.1.2.2	Covering shall not open sufficiently to expose the bare wire, nor shall it be possible to slide the paper along the wire
3. ELONGATION	3.3.1.2	Not less than the following:
6. SPRINGBACK	3.6.2.1	Not greater than 5.5°
7. DIELECTRIC STRENGTH	3.7.1.2	Not less than 300 volts/mil (11800 v/mm) of the minimum thickness of the paper covering on one side (one half the minimum increase)
11. COVERAGE	3.11.1.2	Covering shall not loosen appreciably nor open sufficiently to expose the bare wire after bending on a 6d mandrel

AWG Size	Minimum Elongation, Percent
4/0–0	35
1–9	30

Copyright National Electrical Manufacturers Association
Provided by IHS under license with NEMA
No reproduction or networking permitted without license from IHS
Not for Resale

9009279 0001664 201

AROMATIC POLYAMIDE PAPER COVERED ROUND COPPER MAGNET WIRE THERMAL CLASS 200

Table 2 (MW 61-C)

Two Thicknesses of Aromatic polyamide Paper

AWG Size	Bare Wire Diameter, Inches † Minimum	Nominal	Maximum	Nominal Tape Thickness 0.002 inch (0.051 mm) Minimum Increase in Diameter inches	mm	Maximum Overall Diameter ‡ inches	mm	Nominal Tape Thickness 0.003 inch (0.076 mm) Minimum Increase in Diameter inches	mm	Maximum Overall Diameter ‡ inches	mm	AWG Size
4/0	0.4554	0.4600	0.4646	0.0040	0.102	0.4766	12.106	0.0060	0.152	0.4826	12.258	4/0
3/0	0.4055	0.4096	0.4137	0.0040	0.102	0.4257	10.813	0.0060	0.152	0.4317	10.965	3/0
2/0	0.3612	0.3648	0.3684	0.0040	0.102	0.3804	9.662	0.0060	0.152	0.3864	9.815	2/0
1/0	0.3217	0.3249	0.3281	0.0040	0.102	0.3401	8.639	0.0060	0.152	0.3461	8.791	1/0
1	0.2864	0.2893	0.2922	0.0040	0.102	0.3042	7.727	0.0060	0.152	0.3102	7.897	1
2	0.2550	0.2576	0.2602	0.0040	0.102	0.2722	6.914	0.0060	0.152	0.2782	7.066	2
3	0.2271	0.2294	0.2317	0.0040	0.102	0.2437	6.190	0.0060	0.152	0.2497	6.342	3
4	0.2023	0.2043	0.2053 *	0.0040	0.102	0.2173	5.519	0.0060	0.152	0.2233	5.672	4
5	0.1801	0.1819	0.1828 *	0.0040	0.102	0.1948	4.948	0.0060	0.152	0.2008	5.100	5
6	0.1604	0.1620	0.1628 *	0.0040	0.102	0.1748	4.440	0.0060	0.152	0.1808	4.592	6
7	0.1429	0.1443	0.1450 *	0.0040	0.102	0.1570	3.988	0.0060	0.152	0.1630	4.140	7
8	0.1272	0.1285	0.1292 *	0.0040	0.102	0.1412	3.586	0.0060	0.152	0.1472	3.739	8
9	0.1133	0.1144	0.1150 *	0.0040	0.102	0.1270	3.226	0.0060	0.152	0.1330	3.378	9

NOTE: For direct conversion inches to millimeters, multiply inches by the factor 25.4 (exact). (This note approved as Authorized Engineering Information 3-11-1987.)

Table 3 (MW 61-C)

Dimensions—Sizes 4/0 to 9 AWG
Three Thicknesses of Aromatic polyamide Paper

AWG Size	Bare Wire Diameter, Inches † Minimum	Nominal	Maximum	Nominal Tape Thickness 0.002 inch (0.051 mm) Minimum Increase in Diameter inches	mm	Maximum Overall Diameter ‡ inches	mm	Nominal Tape Thickness 0.003 inch (0.076 mm) Minimum Increase in Diameter inches	mm	Maximum Overall Diameter ‡ inches	mm	AWG Size
4/0	0.4554	0.4600	0.4646	0.0080	0.203	0.4806	12.207	0.0120	0.305	0.4886	12.410	4/0
3/0	0.4055	0.4096	0.4137	0.0080	0.203	0.4297	10.914	0.0120	0.305	0.4377	11.118	3/0
2/0	0.3612	0.3648	0.3684	0.0080	0.203	0.3844	9.764	0.0120	0.305	0.3924	9.967	2/0
1/0	0.3217	0.3249	0.3281	0.0080	0.203	0.3441	8.740	0.0120	0.305	0.3521	8.943	1/0
1	0.2864	0.2893	0.2922	0.0080	0.203	0.3082	7.828	0.0120	0.305	0.3162	8.031	1
2	0.2550	0.2576	0.2602	0.0080	0.203	0.2762	7.015	0.0120	0.305	0.2842	7.219	2
3	0.2271	0.2294	0.2317	0.0080	0.203	0.2477	6.292	0.0120	0.305	0.2557	6.495	3
4	0.2023	0.2043	0.2053 *	0.0080	0.203	0.2213	5.621	0.0120	0.305	0.2293	5.824	4
5	0.1801	0.1819	0.1828 *	0.0080	0.203	0.1988	5.050	0.0120	0.305	0.2068	5.253	5
6	0.1604	0.1620	0.1628 *	0.0080	0.203	0.1788	4.542	0.0120	0.305	0.1868	4.745	6
7	0.1429	0.1443	0.1450 *	0.0080	0.203	0.1610	4.089	0.0120	0.305	0.1690	4.293	7
8	0.1272	0.1285	0.1292 *	0.0080	0.203	0.1452	3.688	0.0120	0.305	0.1532	3.891	8
9	0.1133	0.1144	0.1150 *	0.0080	0.203	0.1310	3.327	0.0120	0.305	0.1390	3.531	9

*This maximum bare wire diameter shall be permitted to be exceeded; see 1.4.9.1.

† For metric equivalents, see Part 1, par. 5.

‡ The maximum overall diameters have been calculated in accordance with the following:

AWG Size	Maximum Increase Due to Two Thicknesses of Paper Tape Thickness 0.002 inch (0.051 mm)	Tape Thickness 0.003 inch (0.176 mm)	Maximum Increase Due to Three Thicknesses of Paper Tape Thickness 0.002 inch (0.051 mm)	Tape Thickness 0.003 inch (0.076 mm)
4/0-9	0.012 inch (0.305 mm)	0.018 inch (0.457 mm)	0.016 inch (0.406 mm)	0.024 inch (0.610 mm)

NOTE: For direct conversion inches to millimeters, multiply inches by the factor 25.4 (exact). (This note approved as Authorized Engineering Information 3-11-1987.)

Copyright National Electrical Manufacturers Association
Provided by IHS under license with NEMA
No reproduction or networking permitted without license from IHS
Not for Resale

9009279 0001665 148

POLYIMIDE, HEAVY ENAMELLED ROUND COPPER MAGNET WIRE FOR HERMETIC APPLICATIONS THERMAL CLASS 220

INSULATING MATERIALS. The coating is based on polyimide resins (1.2.2.2).

THERMAL CLASS. 220°C when tested in accordance with Part 1, para. 1.6 and Part 3, para. 3.58.1.1.

GENERAL REQUIREMENTS. See Part 1.

Characteristics	Test Procedure, See Part 3, Paragraph	Requirements
1. DIMENSIONS	3.1.1.1	See Table H (MW 71-C)
2. ADHERENCE AND FLEXIBILITY	3.2.1.1	No cracks visible in the film coating
3. ELONGATION	3.3.1.1	Not less than value in Table H (MW 71-C)
4. HEAT SHOCK	3.4.1.1	No cracks visible in the film coating after conditioning at 240°C
6. SPRINGBACK	3.6.1.1	Not greater than Value in Table H (MW 71-C)
7. DIELECTRIC STRENGTH	3.7.1.1	Not less than value in Table H (MW 71-C)
8. CONTINUITY	3.8.1.1	The number of discontinuities shall not exceed 5 for 14–24 AWG or 7 for 25–30 AWG when tested in accordance with the following: 14–30 AWG para. 3.8.1.1.1
9. COMPLETENESS OF CURE	3.9.1.1.2	Dissipation factor not greater than 0.6 percent
PERIODIC CONFORMANCE TESTS		
50. THERMOPLASTIC FLOW	3.50.1.1	Median not less than 400°C with heavy film coated 18 AWG
51. SOLUBILITY	3.51.1.1	Two specimens of heavy coated 18 AWG immersed in: xylene 50/50 xylene/ethyl Cellosolve shall not soften sufficiently to expose the bare conductor
52. DIELECTRIC STRENGTH AT RATED TEMPERATURE	3.52.1.1	Heavy film coated wire shall average not les than 4275 volts for 18 AWG
55. REFRIGERANT 22 EXTRACTION	3.55.1.1	Not greater than 0.25 percent of the weight of the film coating
56. RETAINED DIELECTRIC AFTER R-22 CONDITIONING	3.56.1.1	Average not less than 5700 volts with heavy film-coated 18 AWG
59. SCRAPE RESISTANCE	3.59.1.1	Lowest "grams-to-fail" load for any one of the three tests and the average of the three tests shall be not less than the values in Table H (MW 71-C)

Copyright National Electrical Manufacturers Association
Provided by IHS under license with NEMA
No reproduction or networking permitted without license from IHS
Not for Resale

9009279 0001666 084

POLYIMIDE, HEAVY ENAMELLED ROUND COPPER MAGNET WIRE FOR HERMETIC APPLICATIONS THERMAL CLASS 220

Table H (MW 71-C)

AWG Size	Bare Wire Diameter, Inches† Minimum	Nominal	Maximum	Insulation† Minimum Increase in Diameter, Inches	Maximum Overall Diameter, Inches	Elongation, Minimum Percent	Scrape, Grams to Fail Average	Minimum	Springback, Maximum Degrees per Turn	Dielectric Strength, Minimum Breakdown Volts	AWG Size
14	0.0635	0.0641	0.0644 *	0.0032	0.0682	33	1090	925	42	6325	14
15	0.0565	0.0571	0.0574 *	0.0030	0.0609	33	1015	865	46	6175	15
16	0.0503	0.0508	0.0511 *	0.0029	0.0545	33	955	810	50	6000	16
17	0.0448	0.0453	0.0455 *	0.0028	0.0488	32	890	755	54	5850	17
18	0.0399	0.0403	0.0405 *	0.0026	0.0437	32	835	710	58	5700	18
19	0.0355	0.0359	0.0361 *	0.0025	0.0391	31	785	665	62	5550	19
20	0.0317	0.0320	0.0322 *	0.0023	0.0351	30	740	630	66	5400	20
21	0.0282	0.0285	0.0286 *	0.0022	0.0314	30	695	595	53	5250	21
22	0.0250	0.0253	0.0254 *	0.0021	0.0281	29	650	550	58	5125	22
23	0.0224	0.0226	0.0227 *	0.0020	0.0253	29	605	515	62	5000	23
24	0.0199	0.0201	0.0202 *	0.0019	0.0227	28	565	485	67	4850	24
25	0.0177	0.0179	0.0180 *	0.0018	0.0203	28	530	450	72	4725	25
26	0.0157	0.0159	0.0160 *	0.0017	0.0182	27	495	425	76	4600	26
27	0.0141	0.0142	0.0143	0.0016	0.0164	27	460	395	50	4500	27
28	0.0125	0.0126	0.0127	0.0016	0.0147	26	435	370	55	4375	28
29	0.0112	0.0113	0.0114	0.0015	0.0133	26	405	340	61	4250	29
30	0.0099	0.0100	0.0101	0.0014	0.0119	25	380	325	66	4150	30

*This maximum bare wire diameter shall be permitted to be exceeded; see 1.4.9.1.
†For metric equivalent, see 1.5.
NOTE: For direct conversion inches to millimeters, multiply inches by the factor 25.4 (exact). (This note approved as Authorized Engineering Information 3-11-1987.)

Copyright National Electrical Manufacturers Association
Provided by IHS under license with NEMA
No reproduction or networking permitted without license from IHS
Not for Resale

9009279 0001667 T10

POLYESTER (AMIDE) (IMIDE), HEAVY ENAMELLED ROUND COPPER MAGNET WIRE FOR HERMETIC APPLICATIONS THERMAL CLASS 180

INSULATING MATERIALS. The coating is based on polyester (amide) (imide) resins (1.2.2.2).

THERMAL CLASS. 180°C when tested in accordance with Part 1, para. 1.6 and Part 3, para. 3.58.1.1.

GENERAL REQUIREMENTS. See Part 1.

Characteristics	Test Procedure, See Part 3, Paragraph	Requirements
1. DIMENSIONS	3.1.1.1	See Table H (MW 72-C)
2. ADHERENCE AND FLEXIBILITY	3.2.1.1	No cracks visible in the film coating
3. ELONGATION	3.3.1.1	Not less than value in Table H (MW 72-C)
4. HEAT SHOCK	3.4.1.1	No cracks visible in the film coating after conditioning at 200°C
6. SPRINGBACK	3.6.1.1	Not greater than value in Table H (MW 72-C)
7. DIELECTRIC STRENGTH	3.7.1.1	Not less than value in Table H (MW 72-C)
8. CONTINUITY	3.8.1.1	The number of discontinuities shall not exceed 5 for 14–24 AWG or 7 for 25–30 AWG when tested in accordance with the following: 14–30 AWG para. 3.8.1.1.1
PERIODIC CONFORMANCE TESTS		
50. THERMOPLASTIC FLOW	3.50.1.1	Median not less than 300°C with heavy film coated 18 AWG
51. SOLUBILITY	3.51.1.1	Two specimens of heavy coated 18 AWG immersed in: xylene 50/50 xylene/ethyl Cellosolve shall not soften sufficiently to expose the bare conductor
52. DIELECTRIC STRENGTH AT RATED TEMPERATURE	3.52.1.1	Heavy film coated wire shall average not les than 4275 volts for 18 AWG
55. REFRIGERANT 22 EXTRACTION	3.55.1.1	Not greater than 0.25 percent of the weight of the film coating
56. RETAINED DIELECTRIC AFTER R-22 CONDITIONING	3.56.1.1	Average not less than 5700 volts with heavy film-coated 18 AWG
59. SCRAPE RESISTANCE	3.59.1.1	Lowest "grams-to-fail" load for any one of the three tests and the average of the three tests shall be not less than the values in Table H (MW 72-C)

Copyright National Electrical Manufacturers Association
Provided by IHS under license with NEMA
No reproduction or networking permitted without license from IHS
Not for Resale

9009279 0001668 957

POLYESTER (AMIDE) (IMIDE), HEAVY
ENAMELLED ROUND COPPER MAGNET WIRE FOR HERMETIC APPLICATIONS
THERMAL CLASS 180
Table H (MW 72-C)

AWG Size	Bare Wire Diameter, Inches†			Insulation†		Elongation, Minimum Percent	Scrape, Grams to Fail		Springback, Maximum Degrees per Turn	Dielectric Strength, Minimum Breakdown Volts	AWG Size
	Minimum	Nominal	Maximum	Minimum Increase in Diameter, Inches	Maximum Overall Diameter, Inches		Average	Minimum			
14	0.0635	0.0641	0.0644*	0.0032	0.0682	33	1490	1270	42	6325	14
15	0.0565	0.0571	0.0574*	0.0030	0.0609	33	1400	1190	46	6175	15
16	0.0503	0.0508	0.0511*	0.0029	0.0545	33	1310	1115	50	6000	16
17	0.0448	0.0453	0.0455*	0.0028	0.0488	32	1230	1045	54	5850	17
18	0.0399	0.0403	0.0405*	0.0026	0.0437	32	1150	980	58	5700	18
19	0.0355	0.0359	0.0361*	0.0025	0.0391	31	1070	910	62	5550	19
20	0.0317	0.0320	0.0322*	0.0023	0.0351	30	1000	850	66	5400	20
21	0.0282	0.0285	0.0286*	0.0022	0.0314	30	940	800	69	5250	21
22	0.0250	0.0253	0.0254*	0.0021	0.0281	29	880	750	68	5125	22
23	0.0224	0.0226	0.0227*	0.0020	0.0253	29	820	700	62	5000	23
24	0.0199	0.0201	0.0202*	0.0019	0.0227	28	770	655	67	4850	24
25	0.0177	0.0179	0.0180*	0.0018	0.0203	28	720	615	72	4725	25
26	0.0157	0.0159	0.0160*	0.0017	0.0182	27	675	575	76	4600	26
27	0.0141	0.0142	0.0143	0.0016	0.0164	27	635	540	50	4500	27
28	0.0125	0.0126	0.0127	0.0015	0.0147	26	595	510	55	4375	28
29	0.0112	0.0113	0.0114	0.0015	0.0133	26	560	480	61	4250	29
30	0.0099	0.0100	0.0101	0.0014	0.0119	25	525	450	66	4150	30

*This maximum bare wire diameter shall be permitted to be exceeded; see 1.4.9.1.
†For metric equivalent, see 1.5.
NOTE: For direct conversion inches to millimeters, multiply inches by the factor 25.4 (exact). (This note approved as Authorized Engineering Information 3-11-1987.)

Copyright National Electrical Manufacturers Association
Provided by IHS under license with NEMA
No reproduction or networking permitted without license from IHS
Not for Resale

9009279 0001669 893

POLYESTER (AMIDE) (IMIDE) OVERCOATED WITH POLYAMIDEIMIDE, HEAVY ENAMELLED ROUND ALUMINUM MAGNET WIRE FOR HERMETIC APPLICATIONS THERMAL CLASS 220

INSULATING MATERIALS. The conductor shall be coated with a dual film. The underlying coating is based on polyester (amide) (imide) resins (1.2.2.2). The superimposed coating is based on polyamideimide resins (1.2.2.2).

THERMAL CLASS. 220°C when tested in accordance with Part 1, para. 1.6 and Part 3, para. 3.58.1.1.

GENERAL REQUIREMENTS. See Part 1.

Characteristics	Test Procedure, See Part 3, Paragraph	Requirements
1. DIMENSIONS	3.1.1.1	See Table H (MW 73-A)
2. ADHERENCE AND FLEXIBILITY	3.2.1.1	No cracks visible in the film coating
3. ELONGATION	3.3.1.1	Not less than value in Table H (MW 73-A)
4. HEAT SHOCK	3.4.1.1	No cracks visible in the film coating after conditioning at 240°C
6. SPRINGBACK	3.6.2.1	Not greater than 4°
7. DIELECTRIC STRENGTH	3.7.1.1	Not less than value in Table H (MW 73-A)
8. CONTINUITY	3.8.1.1	The number of discontinuities shall not exceed 5 when tested in accordance with the following: 14–24 AWG para. 3.8.1.1.1
PERIODIC CONFORMANCE TESTS		
50. THERMOPLASTIC FLOW	3.50.1.1	Median not less than 300°C with heavy film coated 18 AWG
51. SOLUBILITY	3.51.1.1	Two specimens of heavy coated 18 AWG immersed in: xylene 50/50 xylene/ethyl Cellosolve shall not soften sufficiently to expose the bare conductor
52. DIELECTRIC STRENGTH AT RATED TEMPERATURE	3.52.1.1	Heavy film coated wire shall average not les than 4275 volts for 18 AWG
55. REFRIGERANT 22 EXTRACTION	3.55.1.1	Not greater than 0.25 percent of the weight of the film coating
56. RETAINED DIELECTRIC AFTER R-22 CONDITIONING	3.56.1.1	Average not less than 5700 volts with heavy film coated 18 AWG
59. SCRAPE RESISTANCE	3.59.1.1	Lowest "grams-to-fail" load for any one of the three tests and the average of the three tests shall be not less than the values in Table H (MW 73-A)

Copyright National Electrical Manufacturers Association
Provided by IHS under license with NEMA
No reproduction or networking permitted without license from IHS
Not for Resale

9009279 0001670 505

POLYESTER (AMIDE) (IMIDE) OVERCOATED WITH POLYAMIDEIMIDE, HEAVY ENAMELLED ROUND ALUMINUM MAGNET WIRE FOR HERMETIC APPLICATIONS THERMAL CLASS 220

Table H (MW 73-A)

AWG Size	Bare Wire Diameter, Inches†			Insulation†		Elongation,	Scrape, Grams to Fail		Dielectric Strength,	AWG
	Minimum	Nominal	Maximum	Minimum Increase in Diameter, Inches	Maximum Overall Diameter, Inches	Minimum Percent	Average	Minimum	Minimum Breakdown Volts	Size
12	0.0800	0.0808	0.0812 *	0.0029	0.0847	15	895	760	5800	12
13	0.0713	0.0720	0.0724 *	0.0028	0.0757	15	895	760	5600	13
14	0.0635	0.0641	0.0644 *	0.0032	0.0682	15	895	760	6325	14
15	0.0565	0.0571	0.0574 *	0.0030	0.0609	15	840	715	6175	15
16	0.0503	0.0508	0.0511 *	0.0029	0.0545	15	785	670	6000	16
17	0.0448	0.0453	0.0455 *	0.0028	0.0488	15	740	625	5850	17
18	0.0399	0.0403	0.0405 *	0.0026	0.0437	15	690	590	5700	18
19	0.0355	0.0359	0.0361 *	0.0025	0.0391	15	640	545	5550	19
20	0.0317	0.0320	0.0322 *	0.0023	0.0351	14	600	510	5400	20
21	0.0282	0.0285	0.0286 *	0.0022	0.0314	14	565	480	5250	21
22	0.0250	0.0253	0.0254 *	0.0021	0.0281	14	530	450	5125	22
23	0.0224	0.0226	0.0227 *	0.0020	0.0253	14	490	420	5000	23
24	0.0199	0.0201	0.0202 *	0.0019	0.0227	13	460	395	4850	24

*This maximum bare wire diameter shall be permitted to be exceeded; see 1.4.9.1.
†For metric equivalent, see 1.5.
NOTE: For direct conversion inches to millimeters, multiply inches by the factor 25.4 (exact). (This note approved as Authorized Engineering Information 3-11-1987.)

Copyright National Electrical Manufacturers Association
Provided by IHS under license with NEMA
No reproduction or networking permitted without license from IHS
Not for Resale

POLYESTER (AMIDE) (IMIDE) OVERCOATED WITH POLYAMIDEIMIDE, HEAVY ENAMELLED ROUND COPPER MAGNET WIRE FOR HERMETIC APPLICATIONS THERMAL CLASS 200

INSULATING MATERIALS. The conductor shall be coated with a dual film. The underlying coating is based on polyester (amide) (imide) resins (1.2.2.2). The superimposed coating is based on polyamideimide resins (1.2.2.2).

THERMAL CLASS. 200°C when tested in accordance with Part 1, para. 1.6 and Part 3, para. 3.58.1.1.

GENERAL REQUIREMENTS. See Part 1.

Characteristics	Test Procedure, See Part 3, Paragraph	Requirements
1. DIMENSIONS	3.1.1.1	See Table H (MW 73-C)
2. ADHERENCE AND FLEXIBILITY	3.2.1.1	No cracks visible in the film coating
3. ELONGATION	3.3.1.1	Not less than value in Table H (MW 73-C)
4. HEAT SHOCK	3.4.1.1	No cracks visible in the film coating after conditioning at 220°C
6. SPRINGBACK	3.6.1.1	Not greater than Table H (MW 73-C)
7. DIELECTRIC STRENGTH	3.7.1.1	Not less than value in Table H (MW 73-C)
8. CONTINUITY	3.8.1.1	The number of discontinuities shall not exceed 5 for 14–24 AWG or 7 for 25–30 AWG when tested in accordance with the following: 14–30 AWG para. 3.8.1.1.1
PERIODIC CONFORMANCE TESTS		
50. THERMOPLASTIC FLOW	3.50.1.1	Median not less than 300°C with heavy film coated 18 AWG
51. SOLUBILITY	3.51.1.1	Two specimens of heavy coated 18 AWG immersed in: xylene 50/50 xylene/ethyl Cellosolve shall not soften sufficiently to expose the bare conductor
52. DIELECTRIC STRENGTH AT RATED TEMPERATURE	3.52.1.1	Heavy film coated wire shall average not les than 4275 volts for 18 AWG
55. REFRIGERANT 22 EXTRACTION	3.55.1.1	Not greater than 0.25 percent of the weight of the film coating
56. RETAINED DIELECTRIC AFTER R-22 CONDITIONING	3.56.1.1	Average not less than 5700 volts with heavy film-coated 18 AWG
59. SCRAPE RESISTANCE	3.59.1.1	Lowest "grams-to-fail" load for any one of the three tests and the average of the three tests shall be not less than the values in Table H (MW 73-C)

Copyright National Electrical Manufacturers Association
Provided by IHS under license with NEMA
No reproduction or networking permitted without license from IHS
Not for Resale

9009279 0001672 388

POLYESTER (AMIDE) (IMIDE) OVERCOATED WITH POLYAMIDEIMIDE, HEAVY ENAMELLED ROUND COPPER MAGNET WIRE FOR HERMETIC APPLICATIONS THERMAL CLASS 200

Table H (MW 73-C)

AWG Size	Bare Wire Diameter, Inches†			Insulation†		Elongation, Minimum Percent	Scrape, Grams to Fail		Springback, Maximum Degrees per Turn	Dielectric Strength, Minimum Breakdown Volts	AWG Size
	Minimum	Nominal	Maximum	Minimum Increase in Diameter, Inches	Maximum Overall Diameter, Inches		Average	Minimum			
14	0.0635	0.0641	0.0644*	0.0032	0.0682	33	1490	1270	42	6325	14
15	0.0565	0.0571	0.0574*	0.0030	0.0609	33	1400	1190	46	6175	15
16	0.0503	0.0508	0.0511*	0.0029	0.0545	33	1310	1115	50	6000	16
17	0.0448	0.0453	0.0455*	0.0028	0.0488	32	1230	1045	54	5850	17
18	0.0399	0.0403	0.0405*	0.0026	0.0437	32	1150	980	58	5700	18
19	0.0355	0.0359	0.0361*	0.0025	0.0391	31	1070	910	62	5550	19
20	0.0317	0.0320	0.0322*	0.0023	0.0351	30	1000	850	66	5400	20
21	0.0282	0.0285	0.0286*	0.0022	0.0314	30	940	800	53	5250	21
22	0.0250	0.0253	0.0254*	0.0021	0.0281	29	880	750	58	5125	22
23	0.0224	0.0226	0.0227*	0.0020	0.0253	29	820	700	62	5000	23
24	0.0199	0.0201	0.0202*	0.0019	0.0227	28	770	655	67	4850	24
25	0.0177	0.0179	0.0180*	0.0018	0.0203	28	720	615	72	4725	25
26	0.0157	0.0159	0.0160*	0.0017	0.0182	27	675	575	78	4600	26
27	0.0141	0.0142	0.0143	0.0016	0.0164	27	635	540	50	4500	27
28	0.0125	0.0126	0.0127	0.0016	0.0147	26	595	510	55	4375	28
29	0.0112	0.0113	0.0114	0.0015	0.0133	26	560	480	61	4250	29
30	0.0099	0.0100	0.0101	0.0014	0.0119	25	525	450	66	4150	30

*This maximum bare wire diameter shall be permitted to be exceeded; see 1.4.9.1.
†For metric equivalent, see 1.5.
NOTE: For direct conversion inches to millimeters, multiply inches by the factor 25.4 (exact). (This note approved as Authorized Engineering Information 3-11-1987.)

Copyright National Electrical Manufacturers Association
Provided by IHS under license with NEMA
No reproduction or networking permitted without license from IHS
Not for Resale

9009279 0001673 214

POLYESTER (AMIDE) (IMIDE), SINGLE ENAMELLED ROUND ALUMINUM MAGNET WIRE THERMAL CLASS 220

INSULATING MATERIALS. The coating is based on polyester (amide) (imide) resins (1.2.2.2).

THERMAL CLASS. 220°C when tested in accordance with Part 1, para. 1.6 and Part 3, para. 3.58.1.1.

GENERAL REQUIREMENTS. See Part 1.

Characteristics	Test Procedure, See Part 3, Paragraph	Requirements
1. DIMENSIONS	3.1.1.1	See Table S (MW 74-A)
2. ADHERENCE AND FLEXIBILITY	3.2.1.1	No cracks visible in the film coating
3. ELONGATION	3.3.1.1	Not less than value in Table S (MW 74-A)
4. HEAT SHOCK	3.4.1.1	No cracks visible in the film coating after conditioning at 240°C
7. DIELECTRIC STRENGTH	3.7.1.1	Not less than value in Table S (MW 74-A)
8. CONTINUITY	3.8.1.1	The number of discontinuities shall not exceed 25 when tested in accordance with the following: 14–24 AWG para. 3.8.1.1.1
PERIODIC CONFORMANCE TESTS		
50. THERMOPLASTIC FLOW	3.50.1.1	Median not less than 300°C with heavy film coated 18 AWG
51. SOLUBILITY	3.51.1.1	Two specimens of heavy film-coated 18 AWG immersed in: xylene; 50/50 xylene/ethyl Cellosolve; shall not soften sufficiently to expose the bare conductor
52. DIELECTRIC STRENGTH AT RATED TEMPERATURE	3.52.1.1	Heavy film coated wire shall average not less than 4275 volts for 18 AWG
59. SCRAPE RESISTANCE	3.59.1.1	Lowest "grams-to-fail" load for any one of the three tests and the average of the three tests shall be not less than the values in Table S (MW 74-A)

Copyright National Electrical Manufacturers Association
Provided by IHS under license with NEMA
No reproduction or networking permitted without license from IHS
Not for Resale

9009279 0001674 150

POLYESTER (AMIDE) (IMIDE), SINGLE ENAMELLED ROUND ALUMINUM MAGNET WIRE THERMAL CLASS 220

Table S (MW 74-A)

AWG Size	Bare Wire Diameter, Inches†			Insulation†		Elongation, Minimum Percent	Scrape, Grams to Fail		Springback, Maximum Degrees per Turn	Dielectric Strength, Minimum Breakdown Volts	AWG Size
	Minimum	Nominal	Maximum	Minimum Increase in Diameter, Inches	Maximum Overall Diameter, Inches		Average	Minimum			
14	0.0635	0.0641	0.0644 *	0.0016	0.0666	33	840	715	42	3525	14
15	0.0565	0.0571	0.0574 *	0.0015	0.0594	33	780	665	46	3425	15
16	0.0503	0.0508	0.0511 *	0.0014	0.0531	33	735	625	50	3325	16
17	0.0448	0.0453	0.0455 *	0.0014	0.0475	32	690	585	54	3250	17
18	0.0399	0.0403	0.0405 *	0.0013	0.0424	32	645	550	58	3175	18
19	0.0355	0.0359	0.0361 *	0.0012	0.0379	31	600	510	62	3075	19
20	0.0317	0.0320	0.0322 *	0.0012	0.0339	30	560	475	66	3000	20
21	0.0282	0.0285	0.0286 *	0.0011	0.0303	30	525	445	53	2925	21
22	0.0250	0.0253	0.0254 *	0.0011	0.0270	29	490	415	58	2850	22
23	0.0224	0.0226	0.0227 *	0.0010	0.0243	29	460	390	62	2775	23
24	0.0199	0.0201	0.0202 *	0.0010	0.0217	28	430	365	67	2700	24

*This maximum bare wire diameter shall be permitted to be exceeded: see 1.4.9.1.
†For metric equivalent, see 1.5.
NOTE: For direct conversion inches to millimeters, multiply inches by the factor 25.4 (exact). (This note approved as Authorized Engineering Information 3-11-1987.)

Copyright National Electrical Manufacturers Association
Provided by IHS under license with NEMA
No reproduction or networking permitted without license from IHS
Not for Resale

9009279 0001675 097

POLYESTER (AMIDE) (IMIDE), HEAVY ENAMELLED ROUND ALUMINUM MAGNET WIRE THERMAL CLASS 220

INSULATING MATERIALS. The coating is based on polyester (amide) (imide) resins (1.2.2.2).

THERMAL CLASS. 220°C when tested in accordance with Part 1, para. 1.6 and Part 3, para. 3.8.1.1.

GENERAL REQUIREMENTS. See Part 1.

Characteristics	Test Procedure, See Part 3, Paragraph	Requirements
1. DIMENSIONS	3.1.1.1	See Table H (MW 74-A)
2. ADHERENCE AND FLEXIBILITY	3.2.1.1	No cracks visible in the film coating
3. ELONGATION	3.3.1.1	Not less than value in Table H (MW 74-A)
4. HEAT SHOCK	3.4.1.1	No cracks visible in the film coating after conditioning at 240°C
6. SPRINGBACK	3.6.2.1	Not greater than 4°
7. DIELECTRIC STRENGTH	3.7.1.1	Not less than value in Table H (MW 74-A)
8. CONTINUITY	3.8.1.1	The number of discontinuities shall not exceed 5 for 14–24 AWG when tested in accordance with the following: 14–24 AWG para. 3.8.1.1.1

PERIODIC CONFORMANCE TESTS

50. THERMOPLASTIC FLOW	3.50.1.1	Median not less than 300°C with heavy film coated 18 AWG
51. SOLUBILITY	3.51.1.1	Two specimens of heavy film-coated 18 AWG immersed in: xylene 50/50 xylene/ethyl Cellosolve shall not soften sufficiently to expose the bare conductor
52. DIELECTRIC STRENGTH AT RATED TEMPERATURE	3.52.1.1	Heavy film coated wire shall average not less than 4275 volts for 18 AWG
59. SCRAPE RESISTANCE	3.59.1.1	Lowest "grams-to-fail" load for any one of the three tests and the average of the three tests shall be not less than the values in Table H (MW 74-A)

Copyright National Electrical Manufacturers Association
Provided by IHS under license with NEMA
No reproduction or networking permitted without license from IHS
Not for Resale

9009279 0001676 T23

POLYESTER (AMIDE) (IMIDE), HEAVY ENAMELLED ROUND ALUMINUM MAGNET WIRE THERMAL CLASS 220

Table H (MW 74-A)

AWG Size	Bare Wire Diameter, Inches†			Insulation†		Elongation, Minimum Percent	Scrape, Grams to Fail		Dielectric Strength, Minimum Breakdown Volts	AWG Size
	Minimum	Nominal	Maximum	Minimum Increase in Diameter, Inches	Maximum Overall Diameter, Inches		Average	Minimum		
4	0.2023	0.2043	0.2053 *	0.0037	0.2098	15	...	...	3700	4
5	0.1801	0.1819	0.1828 *	0.0036	0.1872	15	...	...	3600	5
6	0.1604	0.1620	0.1628 *	0.0035	0.1671	15	...	...	3500	6
7	0.1429	0.1443	0.1450 *	0.0034	0.1491	15	...	...	3400	7
8	0.1272	0.1285	0.1292 *	0.0033	0.1332	15	...	...	6600	8
9	0.1133	0.1144	0.1150 *	0.0032	0.1189	15	...	...	6400	9
10	0.1009	0.1019	0.1024 *	0.0031	0.1061	15	895	760	6200	10
11	0.0898	0.0907	0.0912 *	0.0030	0.0948	15	895	760	6000	11
12	0.0800	0.0808	0.0812 *	0.0029	0.0847	15	895	760	5800	12
13	0.0713	0.0720	0.0724 *	0.0028	0.0757	15	895	760	5600	13
14	0.0635	0.0641	0.0644 *	0.0032	0.0682	15	895	760	6325	14
15	0.0565	0.0571	0.0574 *	0.0030	0.0609	15	840	715	6175	15
16	0.0503	0.0508	0.0511 *	0.0029	0.0545	15	785	670	6000	16
17	0.0448	0.0453	0.0455 *	0.0028	0.0488	15	740	625	5850	17
18	0.0399	0.0403	0.0405 *	0.0026	0.0437	15	690	590	5700	18
19	0.0355	0.0359	0.0361 *	0.0025	0.0391	15	640	545	5550	19
20	0.0317	0.0320	0.0322 *	0.0023	0.0351	14	600	510	5400	20
21	0.0282	0.0285	0.0286 *	0.0022	0.0314	14	565	480	5250	21
22	0.0250	0.0253	0.0254 *	0.0021	0.0281	14	530	450	5125	22
23	0.0224	0.0226	0.0227 *	0.0020	0.0253	14	490	420	5000	23
24	0.0199	0.0201	0.0202 *	0.0019	0.0227	13	460	395	4850	24

*This maximum bare wire diameter shall be permitted to be exceeded; see 1.4.9.1.
†For metric equivalent, see 1.5.
NOTE: For direct conversion inches to millimeters, multiply inches by the factor 25.4 (exact). (This note approved as Authorized Engineering Information 3-11-1987.)

Copyright National Electrical Manufacturers Association
Provided by IHS under license with NEMA
No reproduction or networking permitted without license from IHS
Not for Resale

9009279 0001677 96T

POLYESTER (AMIDE) (IMIDE), SINGLE ENAMELLED ROUND COPPER MAGNET WIRE THERMAL CLASS 200

INSULATING MATERIALS. The coating is based on polyester (amide) (imide) resins (1.2.2.2).

THERMAL CLASS. 200°C when tested in accordance with Part 1, para. 1.6 and Part 3, para. 3.58.1.1.

GENERAL REQUIREMENTS. See Part 1.

Characteristics	Test Procedure, See Part 3, Paragraph	Requirements
1. DIMENSIONS	3.1.1.1	See Table S (MW 74-C)
2. ADHERENCE AND FLEXIBILITY	3.2.1.1	No cracks visible in the film coating
3. ELONGATION	3.3.1.1	Not less than value in Table S (MW 74-C)
4. HEAT SHOCK	3.4.1.1	No cracks visible in the film coating after conditioning at 220°C
6. SPRINGBACK	3.6.1.1	Not greater than value in Table S (MW 74-C)
7. DIELECTRIC STRENGTH	3.7.1.1	Not less than value in Table S (MW 74-C)
8. CONTINUITY	3.8.1.1	The number of discontinuities shall not exceed 25 when tested in accordance with the following: 14–30 AWG para. 3.8.1.1.1 31–44 AWG para. 3.8.1.1.1 or 3.8.1.1.2 45–56 AWG para. 3.8.1.1.2
PERIODIC CONFORMANCE TESTS		
50. THERMOPLASTIC FLOW	3.50.1.1	Median not less than 300°C with heavy film coated 18 or 36 AWG
51. SOLUBILITY	3.51.1.1	Two specimens of heavy film-coated 18 or 36 AWG immersed in: xylene 50/50 xylene/ethyl Cellosolve shall not soften sufficiently to expose the bare conductor
52. DIELECTRIC STRENGTH AT RATED TEMPERATURE	3.52.1.1	Heavy film coated wire shall average not less than 4275 volts for 18 AWG or 1900 volts for 36 AWG
59. SCRAPE RESISTANCE	3.59.1.1	Lowest "grams-to-fail" load for any one of the three tests and the average of the three tests shall be not less than the values in Table S (MW 74-C)

Copyright National Electrical Manufacturers Association
Provided by IHS under license with NEMA
No reproduction or networking permitted without license from IHS
Not for Resale

POLYESTER (AMIDE) (IMIDE), SINGLE ENAMELLED ROUND COPPER MAGNET WIRE THERMAL CLASS 200

Table S (MW 74-C)

AWG Size	Bare Wire Diameter, Inches† Minimum	Nominal	Maximum	Insulation† Minimum Increase in Diameter, Inches	Maximum Overall Diameter, Inches	Elongation, Minimum Percent	Scrape, Grams to Fail Average	Minimum	Springback, Maximum Degrees per Turn	Dielectric Strength, Minimum Breakdown Volts	AWG Size
14	0.0635	0.0641	0.0644 *	0.0016	0.0666	33	840	715	42	3525	14
15	0.0565	0.0571	0.0574 *	0.0015	0.0594	33	780	665	46	3425	15
16	0.0503	0.0508	0.0511 *	0.0014	0.0531	33	735	625	50	3325	16
17	0.0448	0.0453	0.0455 *	0.0014	0.0475	32	690	585	54	3250	17
18	0.0399	0.0403	0.0405 *	0.0013	0.0424	32	645	550	58	3175	18
19	0.0355	0.0359	0.0361 *	0.0012	0.0379	31	600	510	62	3075	19
20	0.0317	0.0320	0.0322 *	0.0012	0.0339	30	560	475	66	3000	20
21	0.0282	0.0285	0.0286 *	0.0011	0.0303	30	525	445	53	2925	21
22	0.0250	0.0253	0.0254 *	0.0011	0.0270	29	490	415	58	2850	22
23	0.0224	0.0226	0.0227 *	0.0010	0.0243	29	460	390	62	2775	23
24	0.0199	0.0201	0.0202 *	0.0010	0.0217	28	430	365	67	2700	24
25	0.0177	0.0179	0.0180 *	0.0009	0.0194	28	400	340	72	2625	25
26	0.0157	0.0159	0.0160 *	0.0009	0.0173	27	380	325	76	2550	26
27	0.0141	0.0142	0.0143	0.0008	0.0156	27	355	300	50	2500	27
28	0.0125	0.0126	0.0127	0.0008	0.0140	26	335	285	55	2425	28
29	0.0112	0.0113	0.0114	0.0007	0.0126	26	310	265	61	2375	29
30	0.0099	0.0100	0.0101	0.0007	0.0112	25	295	250	66	2300	30
31	0.0088	0.0089	0.0090	0.0006	0.0100	24	...	...	..	2075	31
32	0.0079	0.0080	0.0081	0.0006	0.0091	24	...	...	..	1850	32
33	0.0070	0.0071	0.0072	0.0005	0.0081	23	...	...	..	1675	33
34	0.0062	0.0063	0.0064	0.0005	0.0072	22	...	...	..	1500	34
35	0.0055	0.0056	0.0057	0.0004	0.0064	21	...	...	..	1325	35
36	0.0049	0.0050	0.0051	0.0004	0.0058	20	...	...	..	1200	36
37	0.0044	0.0045	0.0046	0.0003	0.0052	20	...	...	..	1075	37
38	0.0039	0.0040	0.0041	0.0003	0.0047	19	...	...	..	950	38
39	0.0034	0.0035	0.0036	0.0002	0.0041	18	...	...	..	850	39
40	0.0030	0.0031	0.0032	0.0002	0.0037	17	...	...	..	775	40
41	0.0027	0.0028	0.0029	0.0002	0.0033	17	...	...	..	700	41
42	0.0024	0.0025	0.0026	0.0002	0.0030	16	...	...	..	625	42
43	0.0021	0.0022	0.0023	0.0002	0.0026	15	...	...	..	550	43
44	0.0019	0.0020	0.0021	0.0001	0.0024	14	...	...	..	500	44
	Conductor Resistance at 20°C, Ohms per Foot †, ‡ Minimum	Nominal	Maximum				Theoretical Nominal Bare Wire Diameter, Inches †, ‡				
45	3.080	3.348	3.616	0.00010	0.00205	11	0.00176				45
46	3.870	4.207	4.544	0.00010	0.00185	10	0.00157				46
47	4.868	5.291	5.714	0.00010	0.00170	8	0.00140				47
48	6.205	6.745	7.285	0.00010	0.00150	7	0.00124				48
49	7.744	8.417	9.090	0.00010	0.00130	6	0.00111				49
50	9.734	10.58	11.43	0.00010	0.00120	5	0.00099				50
51	12.32	13.39	14.46	0.00010	0.00110	..	0.00088				51
52	15.69	17.05	18.41	0.00010	0.00100	..	0.00078				52
53	19.48	21.17	22.86	0.00005	0.00085	..	0.00070				53
54	24.82	26.98	29.14	0.00005	0.00075	..	0.00062				54
55	31.54	34.28	37.02	0.00005	0.00070	..	0.00055				55
56	39.73	43.19	46.65	0.00005	0.00065	..	0.00049				56

*This maximum bare wire diameter shall be permitted to be exceeded; see 1.4.9.1.
†For metric equivalent, see 1.5.
‡Conductor size tolerance based on resistance; see 1.4.9.2.
NOTE: For direct conversion inches to millimeters, multiply inches by the factor 25.4 (exact). (This note approved as Authorized Engineering Information 3-11-1987.)

Copyright National Electrical Manufacturers Association
Provided by IHS under license with NEMA
No reproduction or networking permitted without license from IHS
Not for Resale

9009279 0001679 732

POLYESTER (AMIDE) (IMIDE), HEAVY ENAMELLED ROUND COPPER MAGNET WIRE THERMAL CLASS 200

INSULATING MATERIALS. The coating is based on polyester (amide) (imide) resins (1.2.2.2).

THERMAL CLASS. 200°C when tested in accordance with Part 1, para. 1.6 and Part 3, para. 3.58.1.1.

GENERAL REQUIREMENTS. See Part 1.

Characteristics	Test Procedure, See Part 3, Paragraph	Requirements
1. DIMENSIONS	3.1.1.1	See Table H (MW 74-C)
2. ADHERENCE AND FLEXIBILITY	3.2.1.1	No cracks visible in the film coating
3. ELONGATION	3.3.1.1	Not less than value in Table H (MW 74-C)
4. HEAT SHOCK	3.4.1.1	No cracks visible in the film coating after conditioning at 220°C
6. SPRINGBACK	3.6.1.1 3.6.2.1	Not greater than value in Table H (74-C) Not greater than 5°
7. DIELECTRIC STRENGTH	3.7.1.1	Not less than value in Table H (MW 74-C)
8. CONTINUITY	3.8.1.1	The number of discontinuities shall not exceed 5 for 14–24 AWG, 7 for 25–30 AWG, 5 for 31–46 AWG, or 10 for 47–50 AWG, when tested in accordance with the following: 14–30 AWG para. 3.8.1.1.1 31–44 AWG para. 3.8.1.1.1 or 3.8.1.1.2 45–50 AWG para. 3.8.1.1.2

PERIODIC CONFORMANCE TESTS

50. THERMOPLASTIC FLOW	3.50.1.1	Median not less than 300°C with heavy film coated 18 or 36 AWG
51. SOLUBILITY	3.51.1.1	Two specimens of heavy film-coated 18 or 36 AWG immersed in: xylene 50/50 xylene/ethyl Cellosolve shall not soften sufficiently to expose the bare conductor
52. DIELECTRIC STRENGTH AT RATED TEMPERATURE	3.52.1.1	Heavy film coated wire shall average not less than 4275 volts for 18 AWG or 1900 volts for 36 AWG
59. SCRAPE RESISTANCE	3.59.1.1	Lowest "grams-to-fail" load for any one of the three tests and the average of the three tests shall be not less than the values in Table H (MW 74-C)

Copyright National Electrical Manufacturers Association
Provided by IHS under license with NEMA
No reproduction or networking permitted without license from IHS
Not for Resale

POLYESTER (AMIDE) (IMIDE), HEAVY ENAMELLED ROUND COPPER MAGNET WIRE THERMAL CLASS 200

Table H (MW 74-C)

AWG Size	Bare Wire Diameter, Inches† Minimum	Nominal	Maximum	Insulation† Minimum Increase in Diameter, Inches	Maximum Overall Diameter, Inches	Elongation, Minimum Percent	Scrape, Grams to Fail Average	Minimum	Springback, Maximum Degrees per Turn	Dielectric Strength, Minimum Breakdown Volts	AWG Size
4	0.2023	0.2043	0.2053 *	0.0037	0.2098	38	....	....	..	3700	4
5	0.1801	0.1819	0.1828 *	0.0036	0.1872	37	....	....	..	3600	5
6	0.1604	0.1620	0.1628 *	0.0035	0.1671	37	....	....	..	3500	6
7	0.1429	0.1443	0.1450 *	0.0034	0.1491	36	....	....	..	3400	7
8	0.1272	0.1285	0.1292 *	0.0033	0.1332	36	....	....	..	3300	8
9	0.1133	0.1144	0.1150 *	0.0032	0.1189	36	....	....	..	3200	9
10	0.1009	0.1019	0.1024 *	0.0031	0.1061	35	1490	1270	..	6200	10
11	0.0898	0.0907	0.0912 *	0.0030	0.0948	35	1490	1270	..	6000	11
12	0.0800	0.0808	0.0812 *	0.0029	0.0847	34	1490	1270	..	5800	12
13	0.0713	0.0720	0.0724 *	0.0028	0.0757	34	1490	1270	..	5600	13
14	0.0635	0.0641	0.0644 *	0.0032	0.0682	33	1490	1270	42	6325	14
15	0.0565	0.0571	0.0574 *	0.0030	0.0609	33	1400	1190	46	6175	15
16	0.0503	0.0508	0.0511 *	0.0029	0.0545	33	1310	1115	50	6000	16
17	0.0448	0.0453	0.0455 *	0.0028	0.0488	32	1230	1045	54	5850	17
18	0.0399	0.0403	0.0405 *	0.0026	0.0437	32	1150	980	58	5700	18
19	0.0355	0.0359	0.0361 *	0.0025	0.0391	31	1070	910	62	5550	19
20	0.0317	0.0320	0.0322 *	0.0023	0.0351	30	1000	850	66	5400	20
21	0.0282	0.0285	0.0286 *	0.0022	0.0314	30	940	800	53	5250	21
22	0.0250	0.0253	0.0254 *	0.0021	0.0281	29	880	750	58	5125	22
23	0.0224	0.0226	0.0227 *	0.0020	0.0253	29	820	700	62	5000	23
24	0.0199	0.0201	0.0202 *	0.0019	0.0227	28	770	655	67	4850	24
25	0.0177	0.0179	0.0180 *	0.0018	0.0203	28	720	615	72	4725	25
26	0.0157	0.0159	0.0160 *	0.0017	0.0182	27	675	575	76	4600	26
27	0.0141	0.0142	0.0143	0.0016	0.0164	27	635	540	50	4500	27
28	0.0125	0.0126	0.0127	0.0016	0.0147	26	595	510	55	4375	28
29	0.0112	0.0113	0.0114	0.0015	0.0133	26	560	480	61	4250	29
30	0.0099	0.0100	0.0101	0.0014	0.0119	25	525	450	66	4150	30
31	0.0088	0.0089	0.0090	0.0013	0.0108	24	...	...	..	3825	31
32	0.0079	0.0080	0.0081	0.0012	0.0098	24	...	...	..	3525	32
33	0.0070	0.0071	0.0072	0.0011	0.0088	23	...	...	..	3250	33
34	0.0062	0.0063	0.0064	0.0010	0.0078	22	...	...	..	2975	34
35	0.0055	0.0056	0.0057	0.0009	0.0070	21	...	...	..	2750	35
36	0.0049	0.0050	0.0051	0.0008	0.0063	20	...	...	..	2525	36
37	0.0044	0.0045	0.0046	0.0008	0.0057	20	...	...	..	2325	37
38	0.0039	0.0040	0.0041	0.0007	0.0051	19	...	...	..	2150	38
39	0.0034	0.0035	0.0036	0.0006	0.0045	18	...	...	..	1975	39
40	0.0030	0.0031	0.0032	0.0006	0.0040	17	...	...	..	1800	40
41	0.0027	0.0028	0.0029	0.0005	0.0036	17	...	...	..	1675	41
42	0.0024	0.0025	0.0026	0.0004	0.0032	16	...	...	..	1525	42
43	0.0021	0.0022	0.0023	0.0004	0.0029	15	...	...	..	1400	43
44	0.0019	0.0020	0.0021	0.0004	0.0027	14	...	...	..	1300	44
	Conductor Resistance at 20°C, Ohms per Foot †, ‡ Minimum	Nominal	Maximum				Theoretical Nominal Bare Wire Diameter, Inches †, ‡				
45	3.080	3.348	3.616	0.00030	0.00230	11	0.00176				45
46	3.870	4.207	4.544	0.00030	0.00210	10	0.00157				46
47	4.868	5.291	5.714	0.00030	0.00190	8	0.00140				47
48	6.205	6.745	7.285	0.00020	0.00170	7	0.00124				48
49	7.744	8.417	9.090	0.00020	0.00150	6	0.00111				49
50	9.734	10.58	11.43	0.00020	0.00140	5	0.00099				50

*This maximum bare wire diameter shall be permitted to be exceeded; see 1.4.9.1.
†For metric equivalent, see 1.5.
‡Conductor size tolerance based on resistance; see 1.4.9.2.
NOTE: For conversion inches to millimeters, multiply inches by the factor 25.4 (exact). (This note approved as Authorized Engineering

Copyright National Electrical Manufacturers Association
Provided by IHS under license with NEMA 1-1987)
No reproduction or networking permitted without license from IHS Not for Resale

9009279 0001681 390

POLYURETHANE, SINGLE ENAMELLED ROUND COPPER MAGNET WIRE FOR SOLDERABLE APPLICATIONS THERMAL CLASS 130

INSULATING MATERIALS. The coating is based on polyurethane resins (1.2.2.2).

THERMAL CLASS. 130°C when tested in accordance with Part 1, para. 1.6 and Part 3, para. 3.58.1.1.

GENERAL REQUIREMENTS. See Part 1.

Characteristics	Test Procedure, See Part 3, Paragraph	Requirements
1. DIMENSIONS	3.3.1.1	See Table S (MW 75-C)
2. ADHERENCE AND FLEXIBILITY	3.2.1.1	No cracks visible in the film coating
3. ELONGATION	3.3.1.1	Not less than value in Table S (MW 75-C)
4. HEAT SHOCK	3.4.1.1	No cracks visible in the film coating after conditioning at 175°C; exception—use 6d mandrel for all sizes
6. SPRINGBACK	3.6.1.1	Not greater than value in Table S (MW 75-C)
7. DIELECTRIC STRENGTH	3.7.1.1	Not less than value in Table S (MW 75-C)
8. CONTINUITY	3.8.1.1	The number of discontinuities shall not exceed 25 when tested in accordance with the following: 25–30 AWG para. 3.8.1.1.1 31–44 AWG para. 3.8.1.1.1 or 3.8.1.1.2 45–56 AWG para. 3.8.1.1.2
12. SOLDERABILITY	3.12.1.1	Covered with continuous film of solder after immersion at 360°C for the time specified below: 25–29 AWG 6 seconds 30–36 AWG 5 seconds 37–46 AWG 4 seconds 47–56 AWG 3 seconds

PERIODIC CONFORMANCE TESTS

50. THERMOPLASTIC FLOW	3.50.1.1	Median not less than 200°C with heavy film coated 36 AWG
51. SOLUBILITY	3.51.1.1	A specimen of heavy film coated 36 AWG immersed in xylene shall not soften sufficiently to expose the bare conductor
52. DIELECTRIC STRENGTH AT RATED TEMPERATURE	3.52.1.1	Average not less than 1900 volts with heavy film coated 36 AWG
59. SCRAPE RESISTANCE	3.59.1.1	Lowest "grams-to-fail" load for any one of the three tests and the average of the three tests shall be not less than value in Table S (MW 75-C)

Copyright National Electrical Manufacturers Association
Provided by IHS under license with NEMA
No reproduction or networking permitted without license from IHS
Not for Resale

POLYURETHANE, SINGLE ENAMELLED ROUND COPPER MAGNET WIRE FOR SOLDERABLE APPLICATIONS THERMAL CLASS 130

Table S (MW 75-C)

AWG Size	Bare Wire Diameter, Inches†			Insulation†		Elongation, Minimum Percent	Scrape, Grams to Fail		Springback, Maximum Degrees per Turn	Dielectric Strength, Minimum Breakdown Volts	AWG Size
	Minimum	Nominal	Maximum	Minimum Increase in Diameter, Inches	Maximum Overall Diameter, Inches		Average	Minimum			
25	0.0177	0.0179	0.0180 *	0.0009	0.0194	28	350	300	72	2025	25
26	0.0157	0.0159	0.0160 *	0.0009	0.0173	27	330	280	76	2550	26
27	0.0141	0.0142	0.0143	0.0008	0.0156	27	310	265	50	2500	27
28	0.0125	0.0126	0.0127	0.0008	0.0140	26	290	250	55	2425	28
29	0.0112	0.0113	0.0114	0.0007	0.0126	26	270	230	61	2375	29
30	0.0099	0.0100	0.0101	0.0007	0.0112	25	255	220	66	2300	30
31	0.0088	0.0089	0.0090	0.0006	0.0100	24	...	...	..	2075	31
32	0.0079	0.0080	0.0081	0.0006	0.0091	24	...	...	..	1850	32
33	0.0070	0.0071	0.0072	0.0005	0.0081	23	...	...	..	1675	33
34	0.0062	0.0063	0.0064	0.0005	0.0072	22	...	...	..	1500	34
35	0.0055	0.0056	0.0057	0.0004	0.0064	21	...	...	..	1325	35
36	0.0049	0.0050	0.0051	0.0004	0.0058	20	...	...	..	1200	36
37	0.0044	0.0045	0.0046	0.0003	0.0052	20	...	...	..	1075	37
38	0.0039	0.0040	0.0041	0.0003	0.0047	19	...	...	..	950	38
39	0.0034	0.0035	0.0036	0.0002	0.0041	18	...	...	..	850	39
40	0.0030	0.0031	0.0032	0.0002	0.0037	17	...	...	..	775	40
41	0.0027	0.0028	0.0029	0.0002	0.0033	17	...	...	..	700	41
42	0.0024	0.0025	0.0026	0.0002	0.0030	16	...	...	..	625	42
43	0.0021	0.0022	0.0023	0.0002	0.0026	15	...	...	..	550	43
44	0.0019	0.0020	0.0021	0.0001	0.0024	14	...	...	..	500	44
	Conductor Resistance at 20°C, Ohms per Foot †, ‡						Theoretical Nominal Bare Wire Diameter, Inches †, ‡				
	Minimum	Nominal	Maximum								
45	3.080	3.348	3.616	0.00010	0.00205	11	0.00176				45
46	3.870	4.207	4.544	0.00010	0.00185	10	0.00157				46
47	4.868	5.291	5.714	0.00010	0.00170	8	0.00140				47
48	6.205	6.745	7.285	0.00010	0.00150	7	0.00124				48
49	7.744	8.417	9.090	0.00010	0.00130	6	0.00111				49
50	9.734	10.58	11.43	0.00010	0.00120	5	0.00099				50
51	12.32	13.39	14.46	0.00010	0.00110	..	0.00088				51
52	15.69	17.05	18.41	0.00010	0.00100	..	0.00078				52
53	19.48	21.17	22.86	0.00005	0.00085	..	0.00070				53
54	24.82	26.98	29.14	0.00005	0.00075	..	0.00062				54
55	31.54	34.28	37.02	0.00005	0.00070	..	0.00055				55
56	39.73	43.19	46.65	0.00005	0.00065	..	0.00049				56

*This maximum bare wire diameter shall be permitted to be exceeded; see 1.4.9.1.
†For metric equivalent, see 1.5.
‡Conductor size tolerance based on resistance; see 1.4.9.2.
NOTE: For direct conversion inches to millimeters, multiply inches by the factor 25.4 (exact). (This note approved as Authorized Engineering Information 3-11-1987.)

Copyright National Electrical Manufacturers Association
Provided by IHS under license with NEMA
No reproduction or networking permitted without license from IHS
Not for Resale

9009279 0001683 163

POLYURETHANE, HEAVY
ENAMELLED ROUND COPPER MAGNET WIRE FOR SOLDERABLE APPLICATIONS
THERMAL CLASS 130

INSULATING MATERIALS. The coating is based on polyurethane resins (1.2.2.2).

THERMAL CLASS. 130°C when tested in accordance with Part 1, para. 1.6 and Part 3, para. 3.58.1.1.

GENERAL REQUIREMENTS. See Part 1.

Characteristics	Test Procedure, See Part 3, Paragraph	Requirements
1. DIMENSIONS	3.1.1.1	See Table H (MW 75-C)
2. ADHERENCE AND FLEXIBILITY	3.2.1.1	No cracks visible in the film coating
3. ELONGATION	3.3.1.1	Not less than value in Table H (MW 75-C)
4. HEAT SHOCK	3.4.1.1	No cracks visible in the film coating after conditioning at 175°C; exception—use 6d mandrel for all sizes
6. SPRINGBACK	3.6.1.1	Not greater than value in Table H (MW 75-C)
7. DIELECTRIC STRENGTH	3.7.1.1	Not less than value in Table H (MW 75-C)
8. CONTINUITY	3.8.1.1	The number of discontinuities shall not exceed 7 for 25–30 AWG, 5 for 31–46 AWG, or 10 for 47–50 AWG, when tested in accordance with the following: 25–30 AWG para. 3.8.1.1.1 31–44 AWG para. 3.8.1.1.1 or 3.8.1.1.2 45–50 AWG para. 3.8.1.1.2
12. SOLDERABILITY	3.12.1.1	Covered with continuous film of solder after immersion at 360°C for the time specified below: 25–29 AWG 6 seconds 30–36 AWG 5 seconds 37–46 AWG 4 seconds 47–50 AWG 3 seconds

PERIODIC CONFORMANCE TESTS

50. THERMOPLASTIC FLOW	3.50.1.1	Median not less than 200°C with heavy film coated 36 AWG
51. SOLUBILITY	3.51.1.1	A specimen of heavy film coated 36 AWG immersed in xylene shall not soften sufficiently to expose the bare conductor
52. DIELECTRIC STRENGTH AT RATED TEMPERATURE	3.52.1.1	Average not less than 1900 volts with heavy film coated 36 AWG
59. SCRAPE RESISTANCE	3.59.1.1	Lowest "grams-to-fail" load for any one of the three tests and the average of the three tests shall be not less than value in Table H (MW 75-C)

Copyright National Electrical Manufacturers Association
Provided by IHS under license with NEMA
No reproduction or networking permitted without license from IHS
Not for Resale

POLYURETHANE, HEAVY
ENAMELLED ROUND COPPER MAGNET WIRE FOR SOLDERABLE APPLICATIONS
THERMAL CLASS 130
Table H (MW 75-C)

AWG Size	Bare Wire Diameter, Inches† Minimum	Nominal	Maximum	Insulation† Minimum Increase in Diameter, Inches	Maximum Overall Diameter, Inches	Elongation, Minimum Percent	Scrape, Grams to Fail Average	Minimum	Springback, Maximum Degrees per Turn	Dielectric Strength, Minimum Breakdown Volts	AWG Size
25	0.0177	0.0179	0.0180	0.0018	0.0203	28	720	615	72	4725	25
26	0.0157	0.0159	0.0160	0.0017	0.0182	27	675	575	76	4600	26
27	0.0141	0.0142	0.0143	0.0016	0.0164	27	635	540	50	4500	27
28	0.0125	0.0126	0.0127	0.0016	0.0147	26	595	510	55	4375	28
29	0.0112	0.0113	0.0114	0.0015	0.0133	26	560	480	61	4250	29
30	0.0099	0.0100	0.0101	0.0014	0.0119	25	525	450	66	4150	30
31	0.0088	0.0089	0.0090	0.0013	0.0108	24	...	...	..	3825	31
32	0.0079	0.0080	0.0081	0.0012	0.0098	24	...	...	..	3525	32
33	0.0070	0.0071	0.0072	0.0011	0.0088	23	...	...	..	3250	33
34	0.0062	0.0063	0.0064	0.0010	0.0078	22	...	...	..	2975	34
35	0.0055	0.0056	0.0057	0.0009	0.0070	21	...	...	..	2750	35
36	0.0049	0.0050	0.0051	0.0008	0.0063	20	...	...	..	2525	36
37	0.0044	0.0045	0.0046	0.0008	0.0057	20	...	...	..	2325	37
38	0.0039	0.0040	0.0041	0.0007	0.0051	19	...	...	..	2150	38
39	0.0034	0.0035	0.0036	0.0006	0.0045	18	...	...	..	1975	39
40	0.0030	0.0031	0.0032	0.0006	0.0040	17	...	...	..	1800	40
41	0.0027	0.0028	0.0029	0.0005	0.0036	17	...	...	..	1675	41
42	0.0024	0.0025	0.0026	0.0004	0.0032	16	...	...	..	1525	42
43	0.0021	0.0022	0.0023	0.0004	0.0029	15	...	...	..	1400	43
44	0.0019	0.0020	0.0021	0.0004	0.0027	14	...	...	..	1300	44

	Conductor Resistance at 20°C, Ohms per Foot †, ‡ Minimum	Nominal	Maximum				Theoretical Nominal Bare Wire Diameter, Inches †, ‡	
45	3.080	3.348	3.616	0.00030	0.00230	11	0.00176	45
46	3.870	4.207	4.544	0.00030	0.00210	10	0.00157	46
47	4.868	5.291	5.714	0.00030	0.00190	8	0.00140	47
48	6.205	6.745	7.285	0.00020	0.00170	7	0.00124	48
49	7.744	8.417	9.090	0.00020	0.00150	6	0.00111	49
50	9.734	10.58	11.43	0.00020	0.00140	5	0.00099	50

*This maximum bare wire diameter shall be permitted to be exceeded; see 1.4.9.1.
†For metric equivalent, see 1.5.
‡Conductor size tolerance based on resistance; see 1.4.9.2.
NOTE: For direct conversion inches to millimeters, multiply inches by the factor 25.4 (exact). (This note approved as Authorized Engineering Information 3-11-1987.)

Copyright National Electrical Manufacturers Association
Provided by IHS under license with NEMA
No reproduction or networking permitted without license from IHS
Not for Resale

9009279 0001685 T36

POLYESTER (AMIDE) (IMIDE) OVERCOATED WITH POLYAMIDE, SINGLE ENAMELLED ROUND ALUMINUM MAGNET WIRE THERMAL CLASS 180

INSULATING MATERIALS. The conductor shall be coated with a dual film. The underlying coating is based on polyester (amide) (imide) resins (1.2.2.2). The superimposed coating is based on polyamide resins (1.2.2.2).

THERMAL CLASS. 180°C when tested in accordance with Part 1, para. 1.6 and Part 3, para. 3.58.1.1.

GENERAL REQUIREMENTS. See Part 1.

Characteristics	Test Procedure, See Part 3, Paragraph	Requirements
1. DIMENSIONS	3.1.1.1	See Table S (MW 76-A)
2. ADHERENCE AND FLEXIBILITY	3.2.1.1	No cracks visible in the film coating
3. ELONGATION	3.3.1.1	Not less than value in Table S (MW 76-A)
4. HEAT SHOCK	3.4.1.1	No cracks visible in the film coating after conditioning at 200°C
7. DIELECTRIC STRENGTH	3.7.1.1	Not less than value in Table S (MW 76-A)
8. CONTINUITY	3.8.1.1	The number of discontinuities shall not exceed 25 when tested in accordance with the following: 14–30 AWG para. 3.8.1.1.1
PERIODIC CONFORMANCE TESTS		
50. THERMOPLASTIC FLOW	3.50.1.1	Median not less than 225°C with heavy film coated 18 AWG
51. SOLUBILITY	3.51.1.1	Two specimens of heavy film coated 18 AWG immersed in: xylene; 50/50 xylene/ethyl Cellosolve; shall not soften sufficiently to expose the bare conductor
52. DIELECTRIC STRENGTH AT RATED TEMPERATURE	3.52.1.1	Average not less than 3850 volts with heavy film coated 18 AWG
59. SCRAPE RESISTANCE	3.59.1.1	Lowest "grams-to-fail" load for any one of the three tests and the average of the three tests shall be not less than the values in Table S (MW 76-A)

Copyright National Electrical Manufacturers Association
Provided by IHS under license with NEMA
No reproduction or networking permitted without license from IHS
Not for Resale

9009279 0001686 972

POLYESTER (AMIDE) (IMIDE) OVERCOATED WITH POLYAMIDE, SINGLE ENAMELLED ROUND ALUMINUM MAGNET WIRE
THERMAL CLASS 180
Table S (MW 76-A)

AWG Size	Bare Wire Diameter, Inches†			Insulation†		Elongation, Minimum Percent	Scrape, Grams to Fail		Dielectric Strength, Minimum Breakdown Volts	AWG Size
	Minimum	Nominal	Maximum	Minimum Increase in Diameter, Inches	Maximum Overall Diameter, Inches		Average	Minimum		
14	0.0635	0.0641	0.0644 *	0.0016	0.0666	15	505	430	3175	14
15	0.0565	0.0571	0.0574 *	0.0015	0.0594	15	470	400	3075	15
16	0.0503	0.0508	0.0511 *	0.0014	0.0531	15	440	375	3000	16
17	0.0448	0.0453	0.0455 *	0.0014	0.0475	15	415	350	2925	17
18	0.0399	0.0403	0.0405 *	0.0013	0.0424	15	390	330	2850	18
19	0.0355	0.0359	0.0361 *	0.0012	0.0379	15	360	305	2775	19
20	0.0317	0.0320	0.0322 *	0.0012	0.0339	14	335	285	2700	20
21	0.0282	0.0285	0.0286 *	0.0011	0.0303	14	315	265	2625	21
22	0.0250	0.0253	0.0254 *	0.0011	0.0270	14	295	250	2575	22
23	0.0224	0.0226	0.0227 *	0.0010	0.0243	14	275	235	2500	23
24	0.0199	0.0201	0.0202 *	0.0010	0.0217	13	260	220	2425	24
25	0.0177	0.0179	0.0180 *	0.0009	0.0194	13	245	205	2375	25
26	0.0157	0.0159	0.0160 *	0.0009	0.0173	13	230	190	2300	26
27	0.0141	0.0142	0.0143	0.0008	0.0156	13	215	175	2250	27
28	0.0125	0.0126	0.0127	0.0008	0.0140	12	200	160	2175	28
29	0.0112	0.0113	0.0114	0.0007	0.0126	12	185	145	2150	29
30	0.0099	0.0100	0.0101	0.0007	0.0112	12	170	130	2075	30

*This maximum bare wire shall be permitted to be exceeded; see 1.4.9.1.
†For metric equivalents, see 1.5.
NOTE: For direct conversion of inches to millimeters, multiply inches by the factor 25.4 (exact). (This note approved as Authorized Engineering Information 3-11-1987.)

Copyright National Electrical Manufacturers Association
Provided by IHS under license with NEMA
No reproduction or networking permitted without license from IHS
Not for Resale

9009279 0001687 809

POLYESTER (AMIDE) (IMIDE) OVERCOATED WITH POLYAMIDE, HEAVY ENAMELLED ROUND ALUMINUM MAGNET WIRE THERMAL CLASS 180

INSULATING MATERIALS. The conductor shall be coated with a dual film. The underlying coating is based on polyester (amide) (imide) resins (1.2.2.2). The superimposed coating is based on polyamide resins (1.2.2.2).

THERMAL CLASS. 180°C when tested in accordance with Part 1, para. 1.6 and Part 3, para. 3.58.1.1.

GENERAL REQUIREMENTS. See Part 1.

Characteristics	Test Procedure, See Part 3, Paragraph	Requirements
1. DIMENSIONS	3.1.1.1	See Table H (MW 76-A)
2. ADHERENCE AND FLEXIBILITY	3.2.1.1	No cracks visible in the film coating
3. ELONGATION	3.3.1.1	Not less than value in Table H (MW 76-A)
4. HEAT SHOCK	3.4.1.1	No cracks visible in the film coating after conditioning at 200°C
6. SPRINGBACK	3.6.2.1	Not greater than 4°
7. DIELECTRIC STRENGTH	3.7.1.1	Not less than value in Table H (MW 76-A)
8. CONTINUITY	3.8.1.1	The number of discontinuities shall not exceed 10 for 14–24 AWG when tested in accordance with the following: 14–24 AWG para. 3.8.1.1.1
PERIODIC CONFORMANCE TESTS		
50. THERMOPLASTIC FLOW	3.50.1.1	Median not less than 225°C with heavy film coated 18 AWG
51. SOLUBILITY	3.51.1.1	Two specimens of heavy film coated 18 AWG immersed in: xylene; 50/50 xylene/ethyl Cellosolve; shall not soften sufficiently to expose the bare conductor
52. DIELECTRIC STRENGTH AT RATED TEMPERATURE	3.52.1.1	Average not less than 3850 volts with heavy film coated 18 AWG
59. SCRAPE RESISTANCE	3.59.1.1	Lowest "grams-to-fail" load for any one of the three tests and the average of the three tests shall be not less than the values in Table H (MW 76-A)

Copyright National Electrical Manufacturers Association
Provided by IHS under license with NEMA
No reproduction or networking permitted without license from IHS
Not for Resale

9009279 0001688 745

POLYESTER (AMIDE) (IMIDE) OVERCOATED WITH POLYAMIDE, HEAVY ENAMELLED ROUND ALUMINUM MAGNET WIRE THERMAL CLASS 180

Table H (MW 76-A)

AWG Size	Bare Wire Diameter, Inches†			Insulation†		Elongation, Minimum Percent	Scrape, Grams to Fail		Dielectric Strength, Minimum Breakdown Volts	AWG Size
	Minimum	Nominal	Maximum	Minimum Increase in Diameter, Inches	Maximum Overall Diameter, Inches		Average	Minimum		
10	0.1009	0.1019	0.1024*	0.0031	0.1061	15	895	780	5575	10
11	0.0898	0.0907	0.0912*	0.0030	0.0948	15	895	780	5400	11
12	0.0800	0.0808	0.0812*	0.0029	0.0847	15	895	760	5225	12
13	0.0713	0.0720	0.0724*	0.0028	0.0757	15	895	760	5050	13
14	0.0635	0.0641	0.0644*	0.0032	0.0682	15		760	5700	14
15	0.0565	0.0571	0.0574*	0.0030	0.0609	15	840	715	5550	15
16	0.0503	0.0508	0.0511*	0.0029	0.0545	15	785	670	5400	16
17	0.0448	0.0453	0.0455*	0.0028	0.0488	15	740	625	5275	17
18	0.0399	0.0403	0.0405*	0.0026	0.0437	15	690	590	5125	18
19	0.0355	0.0359	0.0361*	0.0025	0.0391	15	640	545	5000	19
20	0.0317	0.0320	0.0322*	0.0023	0.0351	14	600	510	4850	20
21	0.0282	0.0285	0.0286*	0.0022	0.0314	14	565	480	4725	21
22	0.0250	0.0253	0.0254*	0.0021	0.0281	14	520	450	4625	22
23	0.0224	0.0226	0.0227*	0.0020	0.0253	14	490	420	4500	23
24	0.0199	0.0201	0.0202*	0.0019	0.0227	13	460	395	4375	24

*This maximum bare wire diameter shall be permitted to be exceeded; see 1.4.9.1.
†For metric equivalent, see 1.5.
NOTE: For direct conversion inches to millimeters, multiply inches by the factor 25.4 (exact). (This note approved as Authorized Engineering Information 3-11-1987.)

Copyright National Electrical Manufacturers Association
Provided by IHS under license with NEMA
No reproduction or networking permitted without license from IHS
Not for Resale

9009279 0001689 681

POLYESTER (AMIDE) (IMIDE) OVERCOATED WITH POLYAMIDE, SINGLE ENAMELLED ROUND COPPER MAGNET WIRE THERMAL CLASS 180

INSULATING MATERIALS. The conductor shall be coated with a dual film. The underlying coating is based on polyester (amide) (imide) resins (1.2.2.2). The superimposed coating is based on polyamide resins (1.2.2.2).

THERMAL CLASS. 180°C when tested in accordance with Part 1, para. 1.6 and Part 3, para. 3.58.1.1.

GENERAL REQUIREMENTS. See Part 1.

Characteristics	Test Procedure, See Part 3, Paragraph	Requirements
1. DIMENSIONS	3.1.1.1	See Table S (MW 76-C)
2. ADHERENCE AND FLEXIBILITY	3.2.1.1	No cracks visible in the film coating
3. ELONGATION	3.3.1.1	Not less than value in Table S (MW 76-C)
4. HEAT SHOCK	3.4.1.1	No cracks visible in the film coating after conditioning at 200°C
6. SPRINGBACK	3.6.1.1	Not greater than value in Table S (MW 76-C)
7. DIELECTRIC STRENGTH	3.7.1.1	Not less than value in Table S (MW 76-C)
8. CONTINUITY	3.8.1.1	The number of discontinuities shall not exceed 25 when tested in accordance with the following: 14–30 AWG para. 3.8.1.1.1 31– 44 AWG para. 3.8.1.1.1 or 3.8.1.1.2
PERIODIC CONFORMANCE TESTS		
50. THERMOPLASTIC FLOW	3.50.1.1	Median not less than 225°C with heavy film coated 18 or 36 AWG
51. SOLUBILITY	3.51.1.1	Two specimens of heavy film coated 18 or 36 AWG immersed in: xylene 50/50 xylene/ethyl Cellosolve shall not soften sufficiently to expose the bare conductor
52. DIELECTRIC STRENGTH AT RATED TEMPERATURE	3.52.1.1	Average not less than 3825 volts with heavy film coated 18 AWG or 1725 volts with 36 AWG
59. SCRAPE RESISTANCE	3.59.1.1	Lowest "grams-to-fail" load for any one of the three tests and the average of the three tests shall be not less than the values in Table S (MW 76-C)

Copyright National Electrical Manufacturers Association
Provided by IHS under license with NEMA
No reproduction or networking permitted without license from IHS
Not for Resale

9009279 0001690 3T3

POLYESTER (AMIDE) (IMIDE) OVERCOATED WITH POLYAMIDE, SINGLE ENAMELLED ROUND COPPER MAGNET WIRE
THERMAL CLASS 180
Table S (MW 76-C)

AWG Size	Bare Wire Diameter, Inches†			Insulation†		Elongation,	Scrape, Grams to Fail		Springback,	Dielectric Strength,	AWG
	Minimum	Nominal	Maximum	Minimum Increase in Diameter, Inches	Maximum Overall Diameter, Inches	Minimum Percent	Average	Minimum	Maximum Degrees per Turn	Minimum Breakdown Volts	Size
14	0.0635	0.0641	0.0644 *	0.0016	0.0666	.33	840	715	42	3175	14
15	0.0565	0.0571	0.0574 *	0.0015	0.0594	33	780	665	46	3075	15
16	0.0503	0.0508	0.0511 *	0.0014	0.0531	33	735	625	50	3000	16
17	0.0448	0.0453	0.0455 *	0.0014	0.0475	32	690	585	54	2925	17
18	0.0399	0.0403	0.0405 *	0.0013	0.0424	32	645	550	58	2850	18
19	0.0355	0.0359	0.0361 *	0.0012	0.0379	31	600	510	62	2775	19
20	0.0317	0.0320	0.0322 *	0.0012	0.0339	30	560	475	66	2700	20
21	0.0282	0.0285	0.0286 *	0.0011	0.0303	30	525	445	53	2825	21
22	0.0250	0.0253	0.0254 *	0.0011	0.0270	29	490	415	58	2575	22
23	0.0224	0.0226	0.0227 *	0.0010	0.0243	29	460	390	62	2500	23
24	0.0199	0.0201	0.0202 *	0.0010	0.0217	28	430	365	67	2425	24
25	0.0177	0.0179	0.0180 *	0.0009	0.0194	28	400	340	72	2375	25
26	0.0157	0.0159	0.0160 *	0.0009	0.0173	27	380	325	76	2300	26
27	0.0141	0.0142	0.0143	0.0008	0.0156	27	355	300	50	2250	27
28	0.0125	0.0126	0.0127	0.0008	0.0140	26	335	285	55	2175	28
29	0.0112	0.0113	0.0114	0.0007	0.0126	26	310	265	61	2150	29
30	0.0099	0.0100	0.0101	0.0007	0.0112	25	295	250	66	2075	30
31	0.0088	0.0089	0.0090	0.0006	0.0100	24	...	...	..	1875	31
32	0.0079	0.0080	0.0081	0.0006	0.0091	24	...	...	..	1675	32
33	0.0070	0.0071	0.0072	0.0005	0.0081	23	...	...	..	1500	33
34	0.0062	0.0063	0.0064	0.0005	0.0072	22	...	...	..	1350	34
35	0.0055	0.0056	0.0057	0.0004	0.0064	21	...	...	..	1200	35
36	0.0049	0.0050	0.0051	0.0004	0.0058	20	...	...	..	1075	36
37	0.0044	0.0045	0.0046	0.0003	0.0052	20	...	...	..	975	37
38	0.0039	0.0040	0.0041	0.0003	0.0047	19	...	...	..	850	38
39	0.0034	0.0035	0.0036	0.0002	0.0041	18	...	...	..	775	39
40	0.0030	0.0031	0.0032	0.0002	0.0037	17	...	...	..	700	40
41	0.0027	0.0028	0.0029	0.0002	0.0033	17	...	...	..	625	41
42	0.0024	0.0025	0.0026	0.0002	0.0030	16	...	...	..	575	42
43	0.0021	0.0022	0.0023	0.0002	0.0026	15	...	...	..	500	43
44	0.0019	0.0020	0.0021	0.0001	0.0024	14	...	...	..	450	44

*This maximum bare wire diameter shall be permitted to be exceeded; see 1.4.9.1.
†For metric equivalent, see 1.5.
NOTE: For direct conversion inches to millimeters, multiply inches by the factor 25.4 (exact). (This note approved as Authorized Engineering Information 3-11-1987.)

Copyright National Electrical Manufacturers Association
Provided by IHS under license with NEMA
No reproduction or networking permitted without license from IHS
Not for Resale

9009279 0001691 23T

POLYESTER (AMIDE) (IMIDE) OVERCOATED WITH POLYAMIDE, HEAVY ENAMELLED ROUND COPPER MAGNET WIRE THERMAL CLASS 180

INSULATING MATERIALS. The conductor shall be coated with a dual film. The underlying coating is based on polyester (amide) (imide) resins (1.2.2.2). The superimposed coating is based on polyamide resins (1.2.2.2).

THERMAL CLASS. 180°C when tested in accordance with Part 1, para. 1.6 and Part 3, para. 3.58.1.1.

GENERAL REQUIREMENTS. See Part 1.

Characteristics	Test Procedure, See Part 3, Paragraph	Requirements
1. DIMENSIONS	3.1.1.1	See Table H (MW 76-C)
2. ADHERENCE AND FLEXIBILITY	3.2.1.1	No cracks visible in the film coating
3. ELONGATION	3.3.1.1	Not less than value in Table H (MW 76-C)
4. HEAT SHOCK	3.4.1.1	No cracks visible in the film coating after conditioning at 200°C
6. SPRINGBACK	3.6.1.1 3.6.2.1	Not greater than value in Table H (MW 76-C) Not greater than 5°
7. DIELECTRIC STRENGTH	3.7.1.1	Not less than value in Table H (MW 76-C)
8. CONTINUITY	3.8.1.1	The number of discontinuities shall not exceed 5 for 14–24 AWG, 7 for 25–30 AWG, or 5 for 31–44 AWG when tested in accordance with the following: 14–30 AWG para. 3.8.1.1.1 31–44 AWG para. 3.8.1.1.1 or 3.8.1.1.2
PERIODIC CONFORMANCE TESTS		
50. THERMOPLASTIC FLOW	3.50.1.1	Median not less than 225°C with heavy film coated 18 or 36 AWG
51. SOLUBILITY	3.51.1.1	Two specimens of heavy film coated 18 or 36 AWG immersed in: xylene 50/50 xylene/ethyl Cellosolve shall not soften sufficiently to expose the bare conductor
52. DIELECTRIC STRENGTH AT RATED TEMPERATURE	3.52.1.1	Average not less than 3825 volts with heavy film coated 18 AWG or 1725 volts with 36 AWG
59. SCRAPE RESISTANCE	3.59.1.1	Lowest "grams-to-fail" load for any one of the three tests and the average of the three tests shall be not less than the values in Table H (MW 76-C)

Copyright National Electrical Manufacturers Association
Provided by IHS under license with NEMA
No reproduction or networking permitted without license from IHS
Not for Resale

9009279 0001692 176

POLYESTER (AMIDE) (IMIDE) OVERCOATED WITH POLYAMIDE, HEAVY ENAMELLED ROUND COPPER MAGNET WIRE
THERMAL CLASS 180
Table H (MW 76-C)

AWG Size	Bare Wire Diameter, Inches†			Insulation†		Elongation, Minimum Percent	Scrape, Grams to Fail		Springback, Maximum Degrees per Turn	Dielectric Strength, Minimum Breakdown Volts	AWG Size
	Minimum	Nominal	Maximum	Minimum Increase in Diameter, Inches	Maximum Overall Diameter, Inches		Average	Minimum			
10	0.1009	0.1019	0.1024 *	0.0031	0.1061	35	1490	1270	..	5575	10
11	0.0898	0.0907	0.0912 *	0.0030	0.0948	35	1490	1270	..	5400	11
12	0.0800	0.0808	0.0812 *	0.0029	0.0847	34	1490	1270	..	5225	12
13	0.0713	0.0720	0.0724 *	0.0028	0.0757	34	1490	1270	..	5050	13
14	0.0635	0.0641	0.0644 *	0.0032	0.0682	33	1490	1270	42	5700	14
15	0.0565	0.0571	0.0574 *	0.0030	0.0609	33	1400	1190	46	5550	15
16	0.0503	0.0508	0.0511 *	0.0029	0.0545	33	1310	1115	50	5400	16
17	0.0448	0.0453	0.0455 *	0.0028	0.0488	32	1230	1045	54	5275	17
18	0.0399	0.0403	0.0405 *	0.0026	0.0437	32	1150	980	58	5125	18
19	0.0355	0.0359	0.0361 *	0.0025	0.0391	31	1070	910	62	5000	19
20	0.0317	0.0320	0.0322 *	0.0023	0.0351	30	1000	850	66	4850	20
21	0.0282	0.0285	0.0286 *	0.0022	0.0314	30	940	800	53	4725	21
22	0.0250	0.0253	0.0254 *	0.0021	0.0281	29	880	750	58	4625	22
23	0.0224	0.0226	0.0227 *	0.0020	0.0253	29	820	700	62	4500	23
24	0.0199	0.0201	0.0202 *	0.0019	0.0227	28	770	655	67	4375	24
25	0.0177	0.0179	0.0180 *	0.0018	0.0203	28	720	615	72	4250	25
26	0.0157	0.0159	0.0160 *	0.0017	0.0182	27	675	575	76	4150	26
27	0.0141	0.0142	0.0143	0.0016	0.0164	27	635	540	50	4050	27
28	0.0125	0.0126	0.0127	0.0016	0.0147	26	595	510	55	3950	28
29	0.0112	0.0113	0.0114	0.0015	0.0133	26	560	480	61	3825	29
30	0.0099	0.0100	0.0101	0.0014	0.0119	25	525	450	66	3725	30
31	0.0088	0.0089	0.0090	0.0013	0.0108	24	...	...	..	3450	31
32	0.0079	0.0080	0.0081	0.0012	0.0098	24	...	...	..	3175	32
33	0.0070	0.0071	0.0072	0.0011	0.0088	23	...	...	..	2925	33
34	0.0062	0.0063	0.0064	0.0010	0.0078	22	...	...	..	2675	34
35	0.0055	0.0056	0.0057	0.0009	0.0070	21	...	...	..	2475	35
36	0.0049	0.0050	0.0051	0.0008	0.0063	20	...	...	..	2275	36
37	0.0044	0.0045	0.0046	0.0008	0.0057	20	...	...	..	2100	37
38	0.0039	0.0040	0.0041	0.0007	0.0051	19	...	...	..	1925	38
39	0.0034	0.0035	0.0036	0.0006	0.0045	18	...	...	..	1775	39
40	0.0030	0.0031	0.0032	0.0006	0.0040	17	...	...	..	1625	40
41	0.0027	0.0028	0.0029	0.0005	0.0036	17	...	...	..	1500	41
42	0.0024	0.0025	0.0026	0.0004	0.0032	16	...	...	..	1375	42
43	0.0021	0.0022	0.0023	0.0004	0.0029	15	...	...	..	1250	43
44	0.0019	0.0020	0.0021	0.0004	0.0027	14	...	...	..	1175	44

*This maximum bare wire diameter shall be permitted to be exceeded; see 1.4.9.1.
†For metric equivalent, see 1.5.
NOTE: For direct conversion inches to millimeters, multiply inches by the factor 25.4 (exact). (This note approved as Authorized Engineering Information 3-11-1987.)

Copyright National Electrical Manufacturers Association
Provided by IHS under license with NEMA
No reproduction or networking permitted without license from IHS
Not for Resale

9009279 0001693 002

POLYESTER (AMIDE) (IMIDE) OVERCOATED WITH POLYAMIDE, TRIPLE ENAMELLED ROUND COPPER MAGNET WIRE THERMAL CLASS 180

INSULATING MATERIALS. The conductor shall be coated with a dual film. The underlying coating is based on polyester (amide) (imide) resins (1.2.2.2). The superimposed coating is based on polyamide resins (1.2.2.2).

THERMAL CLASS. 180°C when measured in accordance with Part 1, para. 1.6 and Part 3, para. 3.58.1.1.

GENERAL REQUIREMENTS. See Part 1.

Characteristics	Test Procedure, See Part 3, Paragraph	Requirements
1. DIMENSIONS	3.1.1.1	See Table T (MW 76-C)
2. ADHERENCE AND FLEXIBILITY	3.2.1.1	No cracks visible in the film coating
3. ELONGATION	3.3.1.1	Not less than value in Table T (MW 76-C)
4. HEAT SHOCK	3.4.1.1	No cracks visible in the film coating after conditioning at 200°C
6. SPRINGBACK	3.6.1.1	Not greater than value in Table T (MW 76-C)
7. DIELECTRIC STRENGTH	3.7.1.1	Not less than value in Table T (MW 76-C)
8. CONTINUITY	3.8.1.1	The number of discontinuities shall not exceed 3 for 14–24 AWG or 5 for 25–30 AWG when tested in accordance with the following: 14–30 AWG para. 3.8.1.1.1
PERIODIC CONFORMANCE TESTS		
50. THERMOPLASTIC FLOW	3.50.1.1	Median not less than 225°C with heavy film coated 18 AWG
51. SOLUBILITY	3.51.1.1	Two specimens of heavy film coated 18 AWG immersed in: xylene 50/50 xylene/ethyl Cellosolve shall not soften sufficiently to expose the bare conductor
52. DIELECTRIC STRENGTH AT RATED TEMPERATURE	3.52.1.1	Average not less than 3825 volts with heavy film coated 18 AWG
59. SCRAPE RESISTANCE	3.59.1.1	Lowest "grams-to-fail" load for any one of the three tests and the average of the three tests shall be not less than the values in Table T (MW 76-C)

Copyright National Electrical Manufacturers Association
Provided by IHS under license with NEMA
No reproduction or networking permitted without license from IHS
Not for Resale

POLYESTER (AMIDE) (IMIDE) OVERCOATED WITH POLYAMIDE, TRIPLE ENAMELLED ROUND COPPER MAGNET WIRE
THERMAL CLASS 180
Table T (MW 76-C)

AWG Size	Bare Wire Diameter, Inches†			Insulation†		Elongation, Minimum Percent	Scrape, Grams to Fail		Springback, Maximum Degrees per Turn	Dielectric Strength, Minimum Breakdown Volts	AWG Size
	Minimum	Nominal	Maximum	Minimum Increase in Diameter, Inches	Maximum Overall Diameter, Inches		Average	Minimum			
14	0.0635	0.0641	0.0644 *	0.0048	0.0700	33	1735	1475	46	7600	14
15	0.0565	0.0571	0.0574 *	0.0045	0.0627	33	1620	1375	49	7400	15
16	0.0503	0.0508	0.0511 *	0.0043	0.0562	33	1525	1295	53	7200	16
17	0.0448	0.0453	0.0455 *	0.0041	0.0504	32	1425	1210	58	7025	17
18	0.0399	0.0403	0.0405 *	0.0039	0.0452	32	1335	1135	62	6850	18
19	0.0355	0.0359	0.0361 *	0.0037	0.0406	31	1255	1065	66	6675	19
20	0.0317	0.0320	0.0322 *	0.0035	0.0364	30	1180	1000	70	6475	20
21	0.0282	0.0285	0.0286 *	0.0033	0.0326	30	1115	945	53	6325	21
22	0.0250	0.0253	0.0254 *	0.0032	0.0293	29	1045	890	58	6175	22
23	0.0224	0.0226	0.0227 *	0.0030	0.0264	29	975	830	64	6000	23
24	0.0199	0.0201	0.0202 *	0.0029	0.0238	28	910	770	69	5850	24
25	0.0177	0.0179	0.0180 *	0.0027	0.0214	28	850	720	74	5700	25
26	0.0157	0.0159	0.0160 *	0.0026	0.0193	27	795	675	80	5525	26
27	0.0141	0.0142	0.0143	0.0024	0.0173	27	735	625	55	5400	27
28	0.0125	0.0126	0.0127	0.0023	0.0156	26	690	585	60	5275	28
29	0.0112	0.0113	0.0114	0.0022	0.0142	26	645	550	65	5125	29
30	0.0099	0.0100	0.0101	0.0021	0.0128	25	605	515	70	5000	30

*This maximum bare wire diameter shall be permitted to be exceeded; see 1.4.9.1.
†For metric equivalent, see 1.5.
NOTE: For direct conversion inches to millimeters, multiply inches by the factor 25.4 (exact). (This note approved as Authorized Engineering Information 3-11-1987.)

Copyright National Electrical Manufacturers Association
Provided by IHS under license with NEMA
No reproduction or networking permitted without license from IHS
Not for Resale

9009279 0001695 985

POLYESTER (IMIDE), SINGLE ENAMELLED ROUND COPPER MAGNET WIRE FOR SOLDERABLE APPLICATIONS THERMAL CLASS 180

INSULATING MATERIALS. The coating is based on polyester (imide) resins (1.2.2.2).

THERMAL CLASS. 180°C when tested in accordance with Part 1, para. 1.6 and Part 3, para. 3.58.1.1.

GENERAL REQUIREMENTS. See Part 1.

Characteristics	Test Procedure, See Part 3, Paragraph	Requirements
1. DIMENSIONS	3.1.1.1	See Table S (MW 77-C)
2. ADHERENCE AND FLEXIBILITY	3.2.1.1	No cracks visible in the film coating
3. ELONGATION	3.3.1.1	Not less than value in Table S (MW 77-C)
4. HEAT SHOCK	3.4.1.1	No cracks visible in the film coating after conditioning at 200°C
6. SPRINGBACK	3.6.1.1	Not greater than value in Table S (MW 77-C)
7. DIELECTRIC STRENGTH	3.7.1.1	Not less than value in Table S (MW 77-C)
8. CONTINUITY	3.8.1.1	The number of discontinuities shall not exceed 25 when tested in accordance with the following: 25–30 AWG para. 3.8.1.1.1 31–44 AWG para. 3.8.1.1.1 or 3.8.1.1.2
12. SOLDERABILITY	3.12.1.1	Covered with continuous film of solder after immersion at 455°C as follows: 25–29 AWG 6 seconds 30–36 AWG 5 seconds 37–44 AWG 4 seconds

PERIODIC CONFORMANCE TESTS

50. THERMOPLASTIC FLOW	3.50.1.1	Median not less than 225°C with heavy film coated (36 AWG)
51. SOLUBILITY	3.51.1.1	A specimen of heavy film coated 36 AWG immersed in xylene shall not soften sufficiently to expose the bare conductor
52. DIELECTRIC STRENGTH AT RATED TEMPERATURE	3.52.1.1	Heavy film coated wire shall average not less than 1900 volts for 36 AWG
59. SCRAPE RESISTANCE	3.59.1.1	Lowest "grams-to-fail" load for any one of the three tests and the average of the three tests shall be not less than the values in Table S (MW 77-C)

Copyright National Electrical Manufacturers Association
Provided by IHS under license with NEMA
No reproduction or networking permitted without license from IHS
Not for Resale

9009279 0001696 811

POLYESTER (IMIDE), SINGLE ENAMELLED ROUND COPPER MAGNET WIRE FOR SOLDERABLE APPLICATIONS THERMAL CLASS 180

Table S (MW 77-C)

AWG Size	Bare Wire Diameter, Inches†			Insulation†		Elongation, Minimum Percent	Scrape, Grams to Fail		Springback, Maximum Degrees per Turn	Dielectric Strength, Minimum Breakdown Volts	AWG Size
	Minimum	Nominal	Maximum	Minimum Increase in Diameter, Inches	Maximum Overall Diameter, Inches		Average	Minimum			
25	0.0177	0.0179	0.0180 *	0.0009	0.0194	28	350	300	72	2625	25
26	0.0157	0.0159	0.0160 *	0.0009	0.0173	27	335	285	76	2550	26
27	0.0141	0.0142	0.0143	0.0008	0.0156	27	310	265	50	2500	27
28	0.0125	0.0126	0.0127	0.0008	0.0140	26	295	250	55	2425	28
29	0.0112	0.0113	0.0114	0.0007	0.0126	26	275	235	61	2375	29
30	0.0099	0.0100	0.0101	0.0007	0.0112	25	260	220	66	2300	30
31	0.0088	0.0089	0.0090	0.0006	0.0100	24	...	...	..	2075	31
32	0.0079	0.0080	0.0081	0.0006	0.0091	24	...	...	..	1850	32
33	0.0070	0.0071	0.0072	0.0005	0.0081	23	...	...	..	1675	33
34	0.0062	0.0063	0.0064	0.0005	0.0072	22	...	...	..	1500	34
35	0.0055	0.0056	0.0057	0.0004	0.0064	21	...	...	..	1325	35
36	0.0049	0.0050	0.0051	0.0004	0.0058	20	...	...	..	1200	36
37	0.0044	0.0045	0.0046	0.0003	0.0052	20	...	...	..	1075	37
38	0.0039	0.0040	0.0041	0.0003	0.0047	19	...	...	..	950	38
39	0.0034	0.0035	0.0036	0.0002	0.0041	18	...	...	..	850	39
40	0.0030	0.0031	0.0032	0.0002	0.0037	17	...	...	..	775	40
41	0.0027	0.0028	0.0029	0.0002	0.0033	17	...	...	..	700	41
42	0.0024	0.0025	0.0026	0.0002	0.0030	16	...	...	..	625	42
43	0.0021	0.0022	0.0023	0.0002	0.0026	15	...	...	..	550	43
44	0.0019	0.0020	0.0021	0.0001	0.0024	14	...	...	..	500	44

*This maximum bare wire diameter shall be permitted to be exceeded; see 1.4.9.1.
†For metric equivalent, see 1.5.
NOTE: For direct conversion inches to millimeters, multiply inches by the factor 25.4 (exact). (This note approved as Authorized Engineering Information 3-11-1987.)

Copyright National Electrical Manufacturers Association
Provided by IHS under license with NEMA
No reproduction or networking permitted without license from IHS
Not for Resale

9009279 0001697 758

POLYESTER (IMIDE), HEAVY ENAMELLED ROUND COPPER MAGNET WIRE FOR SOLDERABLE APPLICATIONS THERMAL CLASS 180

INSULATING MATERIALS. The coating is based on polyester (imide) resins (1.2.2.2).

THERMAL CLASS. 180°C when measured in accordance with Part 1, para. 1.6 and Part 3, para. 3.58.1.1.

GENERAL REQUIREMENTS. See Part 1.

Characteristics	Test Procedure, See Part 3, Paragraph	Requirements
1. DIMENSIONS	3.1.1.1	See Table H (MW 77-C)
2. ADHERENCE AND FLEXIBILITY	3.2.1.1	No cracks visible in the film coating
3. ELONGATION	3.3.1.1	Not less than value in Table H (MW 77-C)
4. HEAT SHOCK	3.4.1.1	No cracks visible in the film coating after conditioning at 200°C
6. SPRINGBACK	3.6.1.1	Not greater than Table H (MW 77-C)
7. DIELECTRIC STRENGTH	3.7.1.1	Not less than value in Table H (MW 77-C)
8. CONTINUITY	3.8.1.1	The number of discontinuities shall not exceed 7 for 25–30 AWG or 5 for 31–44 AWG when tested in accordance with the following: 25–30 AWG para. 3.8.1.1.1 31–44 AWG para. 3.8.1.1.1 or 3.8.1.1.2
12. SOLDERABILITY	3.12.1.1	Covered with continuous film of solder after immersion at 455°C as follows: 25–29 AWG 6 seconds 30–36 AWG 5 seconds 37–44 AWG 4 seconds

PERIODIC CONFORMANCE TESTS

50. THERMOPLASTIC FLOW	3.50.1.1	Median not less than 225°C with heavy film coated 36 AWG
51. SOLUBILITY	3.51.1.1	A specimen of heavy film coated 36 AWG immersed in xylene shall not soften sufficiently to expose the bare conductor
52. DIELECTRIC STRENGTH AT RATED TEMPERATURE	3.52.1.1	Heavy film coated wire shall average not less than 1900 volts for 36 AWG
59. SCRAPE RESISTANCE	3.59.1.1	Lowest "grams-to-fail" load for any one of the three tests and the average of the three tests shall be not less than the values in Table H (MW 77-C)

Copyright National Electrical Manufacturers Association
Provided by IHS under license with NEMA
No reproduction or networking permitted without license from IHS
Not for Resale

9009279 0001698 694

POLYESTER (IMIDE), HEAVY ENAMELLED ROUND COPPER MAGNET WIRE FOR SOLDERABLE APPLICATIONS THERMAL CLASS 180

Table H (MW 77-C)

AWG Size	Bare Wire Diameter, Inches†			Insulation†		Elongation, Minimum Percent	Scrape, Grams to Fail		Springback, Maximum Degrees per Turn	Dielectric Strength, Minimum Breakdown Volts	AWG Size
	Minimum	Nominal	Maximum	Minimum Increase in Diameter, Inches	Maximum Overall Diameter, Inches		Average	Minimum			
25	0.0177	0.0179	0.0180 *	0.0018	0.0203	28	635	540	72	4725	25
26	0.0157	0.0159	0.0160 *	0.0017	0.0182	27	595	505	76	4600	26
27	0.0141	0.0142	0.0143	0.0016	0.0164	27	560	475	80	4500	27
28	0.0125	0.0126	0.0127	0.0016	0.0147	26	525	450	85	4375	28
29	0.0112	0.0113	0.0114	0.0015	0.0133	26	496	420	91	4250	29
30	0.0099	0.0100	0.0101	0.0014	0.0119	25	460	395	96	4150	30
31	0.0088	0.0089	0.0090	0.0013	0.0108	24	...	...	..	3825	31
32	0.0079	0.0080	0.0081	0.0012	0.0098	24	...	...	..	3525	32
33	0.0070	0.0071	0.0072	0.0011	0.0088	23	...	...	..	3250	33
34	0.0062	0.0063	0.0064	0.0010	0.0078	22	...	...	..	2975	34
35	0.0055	0.0056	0.0057	0.0009	0.0070	21	...	...	..	2750	35
36	0.0049	0.0050	0.0051	0.0008	0.0063	20	...	...	..	2525	36
37	0.0044	0.0045	0.0046	0.0008	0.0057	20	...	...	..	2325	37
38	0.0039	0.0040	0.0041	0.0007	0.0051	19	...	...	..	2150	38
39	0.0034	0.0035	0.0036	0.0006	0.0045	18	...	...	..	1975	39
40	0.0030	0.0031	0.0032	0.0006	0.0040	17	...	...	..	1800	40
41	0.0027	0.0028	0.0029	0.0005	0.0036	17	...	...	..	1675	41
42	0.0024	0.0025	0.0026	0.0004	0.0032	16	...	...	..	1525	42
43	0.0021	0.0022	0.0023	0.0004	0.0029	15	...	...	..	1400	43
44	0.0019	0.0020	0.0021	0.0004	0.0027	14	...	...	..	1300	44

*This maximum bare wire diameter shall be permitted to be exceeded; see 1.4.9.1.
†For metric equivalent, see 1.5.
NOTE: For direct conversion inches to millimeters, multiply inches by the factor 25.4 (exact). (This note approved as Authorized Engineering Information 3-11-1987.)

Copyright National Electrical Manufacturers Association
Provided by IHS under license with NEMA
No reproduction or networking permitted without license from IHS
Not for Resale

9009279 0001699 520

POLYESTER (IMIDE) OVERCOATED WITH POLYAMIDE, SINGLE ENAMELLED ROUND COPPER MAGNET WIRE FOR SOLDERABLE APPLICATIONS THERMAL CLASS 180

INSULATING MATERIALS. The conductor shall be coated with a dual film. The underlying coating is based on polyester (imide) resins (1.2.2.2). The superimposed coating is based on polyamide resins (1.2.2.2).

THERMAL CLASS. 180°C when tested in accordance with Part 1, para. 1.6 and Part 3, para. 3.58.1.1.

GENERAL REQUIREMENTS. See Part 1.

Characteristics	Test Procedure, See Part 3, Paragraph	Requirements
1. DIMENSIONS	3.1.1.1	See Table S (MW 78-C)
2. ADHERENCE AND FLEXIBILITY	3.2.1.1	No cracks visible in the film coating
3. ELONGATION	3.3.1.1	Not less than value in Table S (MW 78-C)
4. HEAT SHOCK	3.4.1.1	No cracks visible in the film coating after conditioning at 200°C
6. SPRINGBACK	3.6.1.1	Not greater than Table S (MW 78-C)
7. DIELECTRIC STRENGTH	3.7.1.1	Not less than value in Table S (MW 78-C)
8. CONTINUITY	3.8.1.1	The number of discontinuities shall not exceed 25 when tested in accordance with the following: 14–30 AWG para. 3.8.1.1.1 31–44 AWG para. 3.8.1.1.1 or 3.8.1.1.2
12. SOLDERABILITY	3.12.1.1	Covered with continuous film of solder after immersion as follows: 14–15 AWG 10 seconds at 455°C 16–19 AWG 8 seconds at 455°C 20–29 AWG 6 seconds at 455°C 30–36 AWG 5 seconds at 455°C 37–44 AWG 4 seconds at 455°C

PERIODIC CONFORMANCE TESTS

50. THERMOPLASTIC FLOW	3.50.1.1	Median not less than 200°C with heavy film coated 18 or 36 AWG
51. SOLUBILITY	3.51.1.1	A specimen of heavy film coated 18 or 36 AWG immersed in xylene shall not soften sufficiently to expose the bare conductor
52. DIELECTRIC STRENGTH AT RATED TEMPERATURE	3.52.1.1	Heavy film coated wire shall average not less than 3825 volts for 18 AWG or 1725 volts for 36 AWG
59. SCRAPE RESISTANCE	3.59.1.1	Lowest "grams-to-fail" load for any one of the three tests and the average of the three tests shall be not less than the values in Table S (MW 78-C)

Copyright National Electrical Manufacturers Association
Provided by IHS under license with NEMA
No reproduction or networking permitted without license from IHS
Not for Resale

9009279 0001709 072

POLYESTER (IMIDE) OVERCOATED WITH POLYAMIDE, SINGLE, ENAMELLED ROUND COPPER MAGNET WIRE FOR SOLDERABLE APPLICATIONS THERMAL CLASS 180

Table S (MW 78-C)

AWG Size	Bare Wire Diameter, Inches†			Insulation†		Elongation, Minimum Percent	Scrape, Grams to Fail		Springback, Maximum Degrees per Turn	Dielectric Strength, Minimum Breakdown Volts	AWG Size
	Minimum	Nominal	Maximum	Minimum Increase in Diameter, Inches	Maximum Overall Diameter, Inches		Average	Minimum			
14	0.0635	0.0641	0.0644 *	0.0016	0.0666	33	740	630	42	3175	14
15	0.0565	0.0571	0.0574 *	0.0015	0.0594	33	685	585	46	3075	15
16	0.0503	0.0508	0.0511 *	0.0014	0.0531	33	645	550	50	3000	16
17	0.0448	0.0453	0.0455 *	0.0014	0.0475	32	605	515	54	2925	17
18	0.0399	0.0403	0.0405 *	0.0013	0.0424	32	570	485	58	2850	18
19	0.0355	0.0359	0.0361 *	0.0012	0.0379	31	530	450	62	2775	19
20	0.0317	0.0320	0.0322 *	0.0012	0.0339	30	495	420	66	2700	20
21	0.0282	0.0285	0.0286 *	0.0011	0.0303	30	460	390	53	2625	21
22	0.0250	0.0253	0.0254 *	0.0011	0.0270	29	430	365	58	2575	22
23	0.0224	0.0226	0.0227 *	0.0010	0.0243	29	405	345	62	2500	23
24	0.0199	0.0201	0.0202 *	0.0010	0.0217	28	380	320	67	2425	24
25	0.0177	0.0179	0.0180 *	0.0009	0.0194	28	350	300	72	2375	25
26	0.0157	0.0159	0.0160 *	0.0009	0.0173	27	335	285	76	2300	26
27	0.0141	0.0142	0.0143	0.0008	0.0156	27	310	265	50	2250	27
28	0.0125	0.0126	0.0127	0.0008	0.0140	26	295	250	55	2175	28
29	0.0112	0.0113	0.0114	0.0007	0.0126	26	275	235	61	2150	29
30	0.0099	0.0100	0.0101	0.0007	0.0112	25	260	220	66	2075	30
31	0.0088	0.0089	0.0090	0.0006	0.0100	24	...	...	..	1875	31
32	0.0079	0.0080	0.0081	0.0006	0.0091	24	...	...	..	1675	32
33	0.0070	0.0071	0.0072	0.0005	0.0081	23	...	...	..	1500	33
34	0.0062	0.0063	0.0064	0.0005	0.0072	22	...	...	..	1350	34
35	0.0055	0.0056	0.0057	0.0004	0.0064	21	...	...	..	1200	35
36	0.0049	0.0050	0.0051	0.0004	0.0058	20	...	...	..	1075	36
37	0.0044	0.0045	0.0046	0.0003	0.0052	20	...	...	..	975	37
38	0.0039	0.0040	0.0041	0.0003	0.0047	19	...	...	..	850	38
39	0.0034	0.0035	0.0036	0.0002	0.0041	18	...	...	..	775	39
40	0.0030	0.0031	0.0032	0.0002	0.0037	17	...	...	..	700	40
41	0.0027	0.0028	0.0029	0.0002	0.0033	17	...	...	..	625	41
42	0.0024	0.0025	0.0026	0.0002	0.0030	16	...	...	..	575	42
43	0.0021	0.0022	0.0023	0.0002	0.0026	15	...	...	..	500	43
44	0.0019	0.0020	0.0021	0.0001	0.0024	14	...	...	..	450	44

*This maximum bare wire diameter shall be permitted to be exceeded; see 1.4.9.1.
†For metric equivalent, see 1.5.
NOTE: For direct conversion inches to millimeters, multiply inches by the factor 25.4 (exact). (This note approved as Authorized Engineering Information 3-11-1987.)

Copyright National Electrical Manufacturers Association
Provided by IHS under license with NEMA
No reproduction or networking permitted without license from IHS
Not for Resale

9009279 0001701 T09

POLYESTER (IMIDE) OVERCOATED WITH POLYAMIDE, HEAVY ENAMELLED ROUND COPPER MAGNET WIRE FOR SOLDERABLE APPLICATIONS THERMAL CLASS 180

INSULATING MATERIALS. The conductor shall be coated with a dual film. The underlying coating is based on polyester (imide) resins (1.2.2.2). The superimposed coating is based on polyamide resins (1.2.2.2).

THERMAL CLASS. 180°C when tested in accordance with Part 1, para. 1.6 and Part 3, para. 3.58.1.1.

GENERAL REQUIREMENTS. See Part 1.

Characteristics	Test Procedure, See Part 3, Paragraph	Requirements
1. DIMENSIONS	3.1.1.1	See Table H (MW 78-C)
2. ADHERENCE AND FLEXIBILITY	3.2.1.1	No cracks visible in the film coating
3. ELONGATION	3.3.1.1	Not less than value in Table H (MW 78-C)
4. HEAT SHOCK	3.4.1.1	No cracks visible in the film coating after conditioning at 200°C
6. SPRINGBACK	3.6.1.1	Not greater than value in Table H (MW 78-C)
7. DIELECTRIC STRENGTH	3.7.1.1	Not less than value in Table H (MW 78-C)
8. CONTINUITY	3.8.1.1	The number of discontinuities shall not exceed 5 for 14–24 AWG, 7 for 25–30 AWG, or 5 for 31–44 AWG, when tested in accordance with the following: 14–30 AWG para. 3.8.1.1.1 31–44 AWG para. 3.8.1.1.1 or 3.8.1.1.2
12. SOLDERABILITY	3.12.1.1	Covered with continuous film of solder after immersion as follows: 14–15 AWG 10 seconds at 455°C 16–19 AWG 8 seconds at 455°C 10–29 AWG 6 seconds at 455°C 30–36 AWG 5 seconds at 455°C 37–44 AWG 4 seconds at 455°C

PERIODIC CONFORMANCE TESTS

50. THERMOPLASTIC FLOW	3.50.1.1	Median not less than 200°C with heavy film coated 18 or 36 AWG
51. SOLUBILITY	3.51.1.1	A specimen of heavy film coated 18 or 36 AWG immersed in xylene shall not soften sufficiently to expose the bare conductor
52. DIELECTRIC STRENGTH AT RATED TEMPERATURE	3.52.1.1	Heavy film coated wire shall average not less than 3825 volts for 18 AWG or 1725 volts for 36 AWG
59. SCRAPE RESISTANCE	3.59.1.1	Lowest "grams-to-fail" load for any one of the three tests and the average of the three tests shall be not less than the values in Table H (MW 78-C)

Copyright National Electrical Manufacturers Association
Provided by IHS under license with NEMA
No reproduction or networking permitted without license from IHS
Not for Resale

9009279 0001702 945

POLYESTER (IMIDE) OVERCOATED WITH POLYAMIDE, HEAVY ENAMELLED ROUND COPPER MAGNET WIRE FOR SOLDERABLE APPLICATIONS THERMAL CLASS 180

Table H (MW 78-C)

AWG Size	Bare Wire Diameter, Inches†			Insulation†		Elongation, Minimum Percent	Scrape, Grams to Fail		Springback, Maximum Degrees per Turn	Dielectric Strength, Minimum Breakdown Volts	AWG Size
	Minimum	Nominal	Maximum	Minimum Increase in Diameter, Inches	Maximum Overall Diameter, Inches		Average	Minimum			
14	0.0635	0.0641	0.0644 *	0.0032	0.0682	33	1310	1120	42	5700	14
15	0.0565	0.0571	0.0574 *	0.0030	0.0609	33	1230	1045	46	5550	15
16	0.0503	0.0508	0.0511 *	0.0029	0.0545	33	1155	980	50	5400	16
17	0.0448	0.0453	0.0455 *	0.0028	0.0488	32	1080	920	54	5275	17
18	0.0399	0.0403	0.0405 *	0.0026	0.0437	32	1010	860	58	5125	18
19	0.0355	0.0359	0.0361 *	0.0025	0.0391	31	940	800	62	5000	19
20	0.0317	0.0320	0.0322 *	0.0023	0.0351	30	880	750	66	4850	20
21	0.0282	0.0285	0.0286 *	0.0022	0.0314	30	825	705	53	4725	21
22	0.0250	0.0253	0.0254 *	0.0021	0.0281	29	775	660	58	4625	22
23	0.0224	0.0226	0.0227 *	0.0020	0.0253	29	720	615	62	4500	23
24	0.0199	0.0201	0.0202 *	0.0019	0.0227	28	680	575	67	4375	24
25	0.0177	0.0179	0.0180 *	0.0018	0.0203	28	635	540	72	4250	25
26	0.0157	0.0159	0.0160 *	0.0017	0.0182	27	595	505	76	4150	26
27	0.0141	0.0142	0.0143	0.0016	0.0164	27	560	475	50	4050	27
28	0.0125	0.0126	0.0127	0.0016	0.0147	26	525	450	55	3950	28
29	0.0112	0.0113	0.0114	0.0015	0.0133	26	495	420	61	3825	29
30	0.0099	0.0100	0.0101	0.0014	0.0119	25	460	395	66	3725	30
31	0.0088	0.0089	0.0090	0.0013	0.0108	24	...	...	..	3450	31
32	0.0079	0.0080	0.0081	0.0012	0.0098	24	...	...	..	3175	32
33	0.0070	0.0071	0.0072	0.0011	0.0088	23	...	...	..	2925	33
34	0.0062	0.0063	0.0064	0.0010	0.0078	22	...	...	..	2675	34
35	0.0055	0.0056	0.0057	0.0009	0.0070	21	...	...	..	2475	35
36	0.0049	0.0050	0.0051	0.0008	0.0063	20	...	...	..	2275	36
37	0.0044	0.0045	0.0046	0.0008	0.0057	20	...	...	..	2100	37
38	0.0039	0.0040	0.0041	0.0007	0.0051	19	...	...	..	1925	38
39	0.0034	0.0035	0.0036	0.0006	0.0045	18	...	...	..	1775	39
40	0.0030	0.0031	0.0032	0.0006	0.0040	17	...	...	..	1625	40
41	0.0027	0.0028	0.0029	0.0005	0.0036	17	...	...	..	1500	41
42	0.0024	0.0025	0.0026	0.0004	0.0032	16	...	...	..	1375	42
43	0.0021	0.0022	0.0023	0.0004	0.0029	15	...	...	..	1250	43
44	0.0019	0.0020	0.0021	0.0004	0.0027	14	...	...	..	1175	44

*This maximum bare wire diameter shall be permitted to be exceeded; see 1.4.9.1.
†For metric equivalents, see 1.5.
NOTE: For direct conversion of inches to millimeters, multiply inches by the factor 25.4 (exact). (This not approved as Authorized Engineering Information 3-11-1987.)

Copyright National Electrical Manufacturers Association
Provided by IHS under license with NEMA
No reproduction or networking permitted without license from IHS
Not for Resale

POLYURETHANE, SINGLE ENAMELLED ROUND COPPER MAGNET WIRE FOR SOLDERABLE APPLICATIONS THERMAL CLASS 155

INSULATING MATERIALS — The coating is based on polyurethane resins (1.2.2.2).

THERMAL CLASS — 155°C when tested in accordance with Part 1, para. 1.6 and Part 3, para. 3.58.1.1.

GENERAL REQUIREMENTS — See Part 1.

Characteristics	Test Procedure, See Part 3, Paragraph	Requirements
1. DIMENSIONS	3.1.1.1	See Table S (MW 79-C)
2. ADHERENCE AND FLEXIBILITY	3.2.1.1	No cracks visible in the film coating
3. ELONGATION	3.3.1.1	Not less than value in Table S (MW 79-C)
4. HEAT SHOCK	3.4.1.1	No cracks visible in the film coating after conditioning at 175°C
6. SPRINGBACK	3.6.1.1	Not greater than value in Table S (MW 79-C)
7. DIELECTRIC STRENGTH	3.7.1.1	Not less than value in Table S (MW 79-C)
8. CONTINUITY	3.8.1.1	The number of discontinuities shall not exceed 25 when tested in accordance with the following: 25—30 AWG para. 3.8.1.1.1 31—44 AWG para. 3.8.1.1.1 or 3.8.1.1.2 45—56 AWG para. 3.8.1.1.2
12. SOLDERABILITY	3.12.1.1	Covered with continuous film of solder after immersion at 360°C for the time specified below: 25—29 AWG 6 seconds 30—36 AWG 5 seconds 37—46 AWG 4 seconds 47—56 AWG 3 seconds

PERIODIC CONFORMANCE TESTS

50. THERMOPLASTIC FLOW	3.50.1.1	Median not less than 200°C with heavy film coated 36 AWG
51. SOLUBILITY	3.51.1.1	A specimen of heavy film coated 36 AWG immersed in xylene shall not soften sufficiently to expose the bare conductor.
52. DIELECTRIC STRENGTH AT RATED TEMPERATURE	3.52.1.1	Average not less than 1900 volts with heavy film coated 36 AWG
59. SCRAPE RESISTANCE	3.59.1.1	Lowest "grams-to-fail" load for any one of the three tests and the average of the three tests shall be not less than value in Table S (MW 79-C)

Copyright National Electrical Manufacturers Association
Provided by IHS under license with NEMA
No reproduction or networking permitted without license from IHS

Not for Resale

9009279 0001704 718

POLYURETHANE, SINGLE ENAMELLED ROUND COPPER MAGNET WIRE FOR SOLDERABLE APPLICATIONS THERMAL CLASS 155

Table S (MW 79-C)

AWG Size	Bare Wire Diameter, Inches†			Insulation†		Elongation, Minimum Percent	Scrape, Grams to Fail		Springback, Maximum Degrees per Turn	Dielectric Strength, Minimum Breakdown Volts	AWG Size
	Minimum	Nominal	Maximum	Minimum Increase in Diameter, Inches	Maximum Overall Diameter, Inches		Average	Minimum			
25	0.0177	0.0179	0.0180 *	0.0009	0.0194	28	350	300	72	2625	25
26	0.0157	0.0159	0.0160 *	0.0009	0.0173	27	330	280	76	2550	26
27	0.0141	0.0142	0.0143	0.0008	0.0156	27	310	265	50	2500	27
28	0.0125	0.0126	0.0127	0.0008	0.0140	26	290	250	55	2425	28
29	0.0112	0.0113	0.0114	0.0007	0.0126	26	270	230	61	2375	29
30	0.0099	0.0100	0.0101	0.0007	0.0112	25	255	220	66	2300	30
31	0.0088	0.0089	0.0090	0.0006	0.0100	24	...	...	..	2075	31
32	0.0079	0.0080	0.0081	0.0006	0.0091	24	...	...	..	1850	32
33	0.0070	0.0071	0.0072	0.0005	0.0081	23	...	...	..	1675	33
34	0.0062	0.0063	0.0064	0.0005	0.0072	22	...	...	..	1500	34
35	0.0055	0.0056	0.0057	0.0004	0.0064	21	...	...	..	1325	35
36	0.0049	0.0050	0.0051	0.0004	0.0058	20	...	...	..	1200	36
37	0.0044	0.0045	0.0046	0.0003	0.0052	20	...	...	..	1075	37
38	0.0039	0.0040	0.0041	0.0003	0.0047	19	...	...	..	950	38
39	0.0034	0.0035	0.0036	0.0002	0.0041	18	...	...	..	850	39
40	0.0030	0.0031	0.0032	0.0002	0.0037	17	...	...	..	775	40
41	0.0027	0.0028	0.0029	0.0002	0.0033	17	...	...	..	700	41
42	0.0024	0.0025	0.0026	0.0002	0.0030	16	...	...	..	625	42
43	0.0021	0.0022	0.0023	0.0002	0.0026	15	...	...	..	550	43
44	0.0019	0.0020	0.0021	0.0001	0.0024	14	...	...	..	500	44
	Conductor Resistance at 20°C, Ohms per Foot †, ‡						Theoretical Nominal Bare Wire Diameter, Inches †, ‡				
	Minimum	Nominal	Maximum								
45	3.080	3.348	3.616	0.00010	0.00205	11	0.00176				45
46	3.870	4.207	4.544	0.00010	0.00185	10	0.00157				46
47	4.868	5.291	5.714	0.00010	0.00170	8	0.00140				47
48	6.205	6.745	7.285	0.00010	0.00150	7	0.00124				48
49	7.744	8.417	9.090	0.00010	0.00130	6	0.00111				49
50	9.734	10.58	11.43	0.00010	0.00120	5	0.00099				50
51	12.32	13.39	14.46	0.00010	0.00110	..	0.00088				51
52	15.69	17.05	18.41	0.00010	0.00100	..	0.00078				52
53	19.48	21.17	22.86	0.00005	0.00085	..	0.00070				53
54	24.82	26.98	29.14	0.00005	0.00075	..	0.00062				54
55	31.54	34.28	37.02	0.00005	0.00070	..	0.00055				55
56	39.73	43.19	46.65	0.00005	0.00065	..	0.00049				56

*This maximum bare wire diameter shall be permitted to be exceeded; see 1.4.9.1.
†For metric equivalent, see 1.5.
‡Conductor size tolerance based on resistance; see 1.4.9.2.
NOTE: For direct conversion inches to millimeters, multiply inches by the factor 25.4 (exact). (This note approved as Authorized Engineering Information 3-11-1987.)

Copyright National Electrical Manufacturers Association
Provided by IHS under license with NEMA
No reproduction or networking permitted without license from IHS
Not for Resale

9009279 0001705 654

POLYURETHANE, HEAVY ENAMELLED ROUND COPPER MAGNET WIRE FOR SOLDERABLE APPLICATIONS THERMAL CLASS 155

INSULATING MATERIALS — The coating is based on polyurethane resins (1.2.2.2).

THERMAL CLASS — 155 °C when tested in accordance with Part 1, para. 1.6 and Part 3, para. 3.58.1.1.

GENERAL REQUIREMENTS — See Part 1.

Characteristics	Test Procedure, See Part 3, Paragraph	Requirements
1. DIMENSIONS	3.1.1.1	See Table H (MW 79-C)
2. ADHERENCE AND FLEXIBILITY	3.2.1.1	No cracks visible in the film coating
3. ELONGATION	3.3.1.1	Not less than value in Table H (MW 79-C)
4. HEAT SHOCK	3.4.1.1	No cracks visible in the film coating after conditioning at 175 °C
6. SPRINGBACK	3.6.1.1	Not greater than value in Table H (MW 79-C)
7. DIELECTRIC STRENGTH	3.7.1.1	Not less than value in Table H (MW 79-C)
8. CONTINUITY	3.8.1.1	The number of discontinuities shall not exceed 7 for 25–30 AWG, 5 for 31–44 AWG, or 10 for 45–50 AWG, when tested in accordance with the following: 25—30 AWG para. 3.8.1.1.1 31—44 AWG para. 3.8.1.1.1 or 3.8.1.1.2 45–50 AWG para. 3.8.1.1.2
12. SOLDERABILITY	3.12.1.1	Covered with continuous film of solder after immersion at 360 °C for the time specified below: 25–29 AWG 6 seconds 30–36 AWG 5 seconds 37–46 AWG 4 seconds 47–50 AWG 3 seconds
PERIODIC CONFORMANCE TESTS		
50. THERMOPLASTIC FLOW	3.50.1.1	Median not less than 200 °C with heavy film coated 36 AWG
51. SOLUBILITY	3.51.1.1	A specimen of heavy film coated 36 AWG immersed in xylene shall not soften sufficiently to expose the bare conductor.
52. DIELECTRIC STRENGTH AT RATED TEMPERATURE	3.52.1.1	Average not less than 1900 volts with heavy film coated 36 AWG
59. SCRAPE RESISTANCE	3.59.1.1	Lowest "grams-to-fail" load for any one of the three tests and the average of the three tests shall be not less than value in Table H (MW 79-C)

Copyright National Electrical Manufacturers Association
Provided by IHS under license with NEMA
No reproduction or networking permitted without license from IHS
Not for Resale

9009279 0001706 590

POLYURETHANE, HEAVY ENAMELLED ROUND COPPER MAGNET WIRE FOR SOLDERABLE APPLICATIONS THERMAL CLASS 155

Table H (MW 79-C)

AWG Size	Bare Wire Diameter, Inches† Minimum	Nominal	Maximum	Insulation† Minimum Increase in Diameter, Inches	Maximum Overall Diameter, Inches	Elongation, Minimum Percent	Scrape, Grams to Fail Average	Minimum	Springback, Maximum Degrees per Turn	Dielectric Strength, Minimum Breakdown Volts	AWG Size
25	0.0177	0.0179	0.0180	0.0018	0.0203	28	720	615	72	4725	25
26	0.0157	0.0159	0.0160	0.0017	0.0182	27	675	575	76	4600	26
27	0.0141	0.0142	0.0143	0.0016	0.0164	27	635	540	50	4500	27
28	0.0125	0.0126	0.0127	0.0016	0.0147	26	595	510	55	4375	28
29	0.0112	0.0113	0.0114	0.0015	0.0133	26	560	480	61	4250	29
30	0.0099	0.0100	0.0101	0.0014	0.0119	25	525	450	66	4150	30
31	0.0088	0.0089	0.0090	0.0013	0.0108	24	...	...	..	3825	31
32	0.0079	0.0080	0.0081	0.0012	0.0098	24	...	...	..	3525	32
33	0.0070	0.0071	0.0072	0.0011	0.0088	23	...	...	..	3250	33
34	0.0062	0.0063	0.0064	0.0010	0.0078	22	...	...	..	2975	34
35	0.0055	0.0056	0.0057	0.0009	0.0070	21	...	...	..	2750	35
36	0.0049	0.0050	0.0051	0.0008	0.0063	20	...	...	..	2525	36
37	0.0044	0.0045	0.0046	0.0008	0.0057	20	...	...	..	2325	37
38	0.0039	0.0040	0.0041	0.0007	0.0051	19	...	...	..	2150	38
39	0.0034	0.0035	0.0036	0.0006	0.0045	18	...	...	..	1975	39
40	0.0030	0.0031	0.0032	0.0006	0.0040	17	...	...	..	1800	40
41	0.0027	0.0028	0.0029	0.0005	0.0036	17	...	...	..	1675	41
42	0.0024	0.0025	0.0026	0.0004	0.0032	16	...	...	..	1525	42
43	0.0021	0.0022	0.0023	0.0004	0.0029	15	...	...	..	1400	43
44	0.0019	0.0020	0.0021	0.0004	0.0027	14	...	...	..	1300	44

AWG Size	Conductor Resistance at 20°C, Ohms per Foot †, ‡ Minimum	Nominal	Maximum				Theoretical Nominal Bare Wire Diameter, Inches †, ‡	AWG Size
45	3.080	3.348	3.616	0.00030	0.00230	11	0.00176	45
46	3.870	4.207	4.544	0.00030	0.00210	10	0.00157	46
47	4.868	5.291	5.714	0.00030	0.00190	8	0.00140	47
48	6.205	6.745	7.285	0.00020	0.00170	7	0.00124	48
49	7.744	8.417	9.090	0.00020	0.00150	6	0.00111	49
50	9.734	10.58	11.43	0.00020	0.00140	5	0.00099	50

*This maximum bare wire diameter shall be permitted to be exceeded; see 1.4.9.1.
†For metric equivalent, see 1.5.
‡Conductor size tolerance based on resistance; see 1.4.9.2.
NOTE: For direct conversion inches to millimeters, multiply inches by the factor 25.4 (exact). (This note approved as Authorized Engineering Information 3-11-1987.)

Copyright National Electrical Manufacturers Association
Provided by IHS under license with NEMA
No reproduction or networking permitted without license from IHS
Not for Resale

9009279 0001707 427

POLYURETHANE OVERCOATED WITH POLYAMIDE, SINGLE ENAMELLED ROUND COPPER MAGNET WIRE FOR SOLDERABLE APPLICATIONS THERMAL CLASS 155

INSULATING MATERIALS. The conductor shall be coated with a dual film. The underlying coating is based on polyurethane resins (1.2.2.2). The superimposed coating is based on polyamide resins (1.2.2.2).

THERMAL CLASS. 155°C when tested in accordance with Part 1, para. 1.6 and Part 3, para. 3.58.1.1.

GENERAL REQUIREMENTS. See Part 1.

Characteristics	Test Procedure, See Part 3, Paragraph	Requirements
1. DIMENSIONS	3.1.1.1	See Table S (MW 80-C)
2. ADHERENCE AND FLEXIBILITY	3.2.1.1	No cracks visible in the film coating
3. ELONGATION	3.3.1.1	Not less than value in Table S (MW 80-C)
4. HEAT SHOCK	3.4.1.1	No cracks visible in the film coating after conditioning at 175°C
6. SPRINGBACK	3.6.1.1	Not greater than value in Table S (MW 80-C)
7. DIELECTRIC STRENGTH	3.7.1.1	Not less than value in Table S (MW 80-C)
8. CONTINUITY	3.8.1.1	The number of discontinuities shall not exceed 25 when tested in accordance with the following: 14–30 AWG para. 3.8.1.1.1 31–44 AWG para. 3.8.1.1.1 or 3.8.1.1.2
12. SOLDERABILITY	3.12.1.1	Covered with continuous film of solder after immersion as follows: 14–19 AWG 10 seconds at 430°C 20–23 AWG 8 seconds at 430°C 24–29 AWG 6 seconds at 360°C 30–36 AWG 5 seconds at 360°C 37–44 AWG 4 seconds at 360°C
PERIODIC CONFORMANCE TESTS		
50. THERMOPLASTIC FLOW	3.50.1.1	Median not less than 200°C with heavy film coated 18 or 36 AWG
51. SOLUBILITY	3.51.1.1	A specimen of heavy film coated 18 or 36 AWG immersed in xylene shall not soften sufficiently to expose the bare conductor
52. DIELECTRIC STRENGTH AT RATED TEMPERATURE	3.52.1.1	Heavy film coated wire shall average not less than 3825 volts for 18 AWG or 1725 volts for 36 AWG
59. SCRAPE RESISTANCE	3.59.1.1	Lowest "grams-to-fail" load for any one of the three tests and the average of the three tests shall be not less than the values in Table S (MW 80-C)

Copyright National Electrical Manufacturers Association
Provided by IHS under license with NEMA
No reproduction or networking permitted without license from IHS
Not for Resale

9009279 0001708 363

POLYURETHANE OVERCOATED WITH POLYAMIDE, SINGLE ENAMELLED ROUND COPPER MAGNET WIRE FOR SOLDERABLE APPLICATIONS THERMAL CLASS 155

Table S (MW 80-C)

AWG Size	Bare Wire Diameter, Inches†			Insulation†		Elongation, Minimum Percent	Scrape, Grams to Fail		Springback, Maximum Degrees per Turn	Dielectric Strength, Minimum Breakdown Volts	AWG Size
	Minimum	Nominal	Maximum	Minimum Increase in Diameter, Inches	Maximum Overall Diameter, Inches		Average	Minimum			
14	0.0635	0.0641	0.0644 *	0.0016	0.0666	33	840	715	42	3175	14
15	0.0565	0.0571	0.0574 *	0.0015	0.0594	33	780	665	46	3075	15
16	0.0503	0.0508	0.0511 *	0.0014	0.0531	33	735	625	50	3000	16
17	0.0448	0.0453	0.0455 *	0.0014	0.0475	32	690	585	54	2925	17
18	0.0399	0.0403	0.0405 *	0.0013	0.0424	32	645	550	58	2850	18
19	0.0355	0.0359	0.0361 *	0.0012	0.0379	31	600	510	62	2775	19
20	0.0317	0.0320	0.0322 *	0.0012	0.0339	30	560	475	66	2700	20
21	0.0282	0.0285	0.0286 *	0.0011	0.0303	30	525	445	53	2625	21
22	0.0250	0.0253	0.0254 *	0.0011	0.0270	29	490	415	58	2575	22
23	0.0224	0.0226	0.0227 *	0.0010	0.0243	29	460	390	62	2500	23
24	0.0199	0.0201	0.0202 *	0.0010	0.0217	28	430	365	67	2425	24
25	0.0177	0.0179	0.0180 *	0.0009	0.0194	28	400	340	72	2375	25
26	0.0157	0.0159	0.0160 *	0.0009	0.0173	27	380	325	76	2300	26
27	0.0141	0.0142	0.0143	0.0008	0.0156	27	355	300	50	2250	27
28	0.0125	0.0126	0.0127	0.0008	0.0140	26	335	285	55	2175	28
29	0.0112	0.0113	0.0114	0.0007	0.0126	26	310	265	61	2150	29
30	0.0099	0.0100	0.0101	0.0007	0.0112	25	295	250	66	2075	30
31	0.0088	0.0089	0.0090	0.0006	0.0100	24	...	...	..	1875	31
32	0.0079	0.0080	0.0081	0.0006	0.0091	24	...	...	..	1675	32
33	0.0070	0.0071	0.0072	0.0005	0.0081	23	...	...	..	1500	33
34	0.0062	0.0063	0.0064	0.0005	0.0072	22	...	...	..	1350	34
35	0.0055	0.0056	0.0057	0.0004	0.0064	21	...	...	..	1200	35
36	0.0049	0.0050	0.0051	0.0004	0.0058	20	...	...	..	1075	36
37	0.0044	0.0045	0.0046	0.0003	0.0052	20	...	...	..	975	37
38	0.0039	0.0040	0.0041	0.0003	0.0047	19	...	...	..	850	38
39	0.0034	0.0035	0.0036	0.0002	0.0041	18	...	...	..	775	39
40	0.0030	0.0031	0.0032	0.0002	0.0037	17	...	...	..	700	40
41	0.0027	0.0028	0.0029	0.0002	0.0033	17	...	...	..	625	41
42	0.0024	0.0025	0.0026	0.0002	0.0030	16	...	...	..	575	42
43	0.0021	0.0022	0.0023	0.0002	0.0026	15	...	...	..	500	43
44	0.0019	0.0020	0.0021	0.0001	0.0024	14	...	...	..	450	44

*This maximum bare wire diameter shall be permitted to be exceeded; see 1.4.9.1.
†For metric equivalent, see 1.5.
NOTE: For direct conversion inches to millimeters, multiply inches by the factor 25.4 (exact). (This note approved as Authorized Engineering Information 3-11-1987.)

Copyright National Electrical Manufacturers Association
Provided by IHS under license with NEMA
No reproduction or networking permitted without license from IHS
Not for Resale

9009279 0001709 2TT

POLYURETHANE OVERCOATED WITH POLYAMIDE, HEAVY ENAMELLED ROUND COPPER MAGNET WIRE FOR SOLDERABLE APPLICATIONS THERMAL CLASS 155

INSULATING MATERIALS. The conductor shall be coated with a dual film. The underlying coating is based on polyurethane resins (1.2.2.2). The superimposed coating is based on polyamide resins (1.2.2.2).

THERMAL CLASS. 155°C when tested in accordance with Part 1, para. 1.6 and Part 3, para. 3.58.1.1.

GENERAL REQUIREMENTS. See Part 1.

Characteristics	Test Procedure, See Part 3, Paragraph	Requirements
1. DIMENSIONS	3.1.1.1	See Table H (MW 80-C)
2. ADHERENCE AND FLEXIBILITY	3.2.1.1	No cracks visible in the film coating
3. ELONGATION	3.3.1.1	Not less than value in Table H (MW 80-C)
4. HEAT SHOCK	3.4.1.1	No cracks visible in the film coating after conditioning at 175°C
6. SPRINGBACK	3.6.1.1	Not greater than value in Table H (MW 80-C)
7. DIELECTRIC STRENGTH	3.7.1.1	Not less than value in Table H (MW 80-C)
8. CONTINUITY	3.8.1.1	The number of discontinuities shall not exceed 5 for 14–24 AWG, 7 for 25–30 AWG, or 5 for 31–44 AWG, when tested in accordance with the following: 14–30 AWG para. 3.8.1.1.1 31–44 AWG para. 3.8.1.1.1 or 3.8.1.1.2
12. SOLDERABILITY	3.12.1.1	Covered with continuous film of solder and not capable of being readily separated after immersion as follows: 14–19 AWG 10 seconds at 430°C 20–23 AWG 8 seconds at 430°C 24–29 AWG 6 seconds at 360°C 30–36 AWG 5 seconds at 360°C 37–44 AWG 4 seconds at 360°C

PERIODIC CONFORMANCE TESTS

50. THERMOPLASTIC FLOW	3.50.1.1	Median not less than 200°C with heavy film coated 18 or 36 AWG
51. SOLUBILITY	3.51.1.1	A specimen of heavy film coated 18 or 36 AWG immersed in xylene shall not soften sufficiently to expose the bare conductor
52. DIELECTRIC STRENGTH AT RATED TEMPERATURE	3.52.1.1	Heavy film coated wire shall average not less than 3825 volts for 18 AWG or 1725 volts for 36 AWG
59. SCRAPE RESISTANCE	3.59.1.1	Lowest "grams-to-fail" load for any one of the three tests and the average of the three tests shall be not less than the values in Table H (MW 80-C)

Copyright National Electrical Manufacturers Association
Provided by IHS under license with NEMA
No reproduction or networking permitted without license from IHS
Not for Resale

9009279 0001710 T11

POLYURETHANE OVERCOATED WITH POLYAMIDE, HEAVY ENAMELLED ROUND COPER MAGNET WIRE FOR SOLDERABLE APPLICATIONS THERMAL CLASS 155

Table H (MW 80-C)

AWG Size	Bare Wire Diameter, Inches†			Insulation†		Elongation, Minimum Percent	Scrape, Grams to Fail		Springback, Maximum Degrees per Turn	Dielectric Strength, Minimum Breakdown Volts	AWG Size
	Minimum	Nominal	Maximum	Minimum Increase in Diameter, Inches	Maximum Overall Diameter, Inches		Average	Minimum			
14	0.0635	0.0641	0.0644 *	0.0032	0.0682	33	1490	1270	42	5700	14
15	0.0565	0.0571	0.0574 *	0.0030	0.0609	33	1400	1190	46	5550	15
16	0.0503	0.0508	0.0511 *	0.0029	0.0545	33	1310	1115	50	5400	16
17	0.0448	0.0453	0.0455 *	0.0028	0.0488	32	1230	1045	54	5275	17
18	0.0399	0.0403	0.0405 *	0.0026	0.0437	32	1150	980	58	5125	18
19	0.0355	0.0359	0.0361 *	0.0025	0.0391	31	1070	910	62	5000	19
20	0.0317	0.0320	0.0322 *	0.0023	0.0351	30	1000	850	66	4850	20
21	0.0282	0.0285	0.0286 *	0.0022	0.0314	30	940	800	53	4725	21
22	0.0250	0.0253	0.0254 *	0.0021	0.0281	29	880	750	58	4625	22
23	0.0224	0.0226	0.0227 *	0.0020	0.0253	29	820	700	62	4500	23
24	0.0199	0.0201	0.0202 *	0.0019	0.0227	28	770	655	67	4375	24
25	0.0177	0.0179	0.0180 *	0.0018	0.0203	28	720	615	72	4250	25
26	0.0157	0.0159	0.0160 *	0.0017	0.0182	27	675	575	76	4150	26
27	0.0141	0.0142	0.0143	0.0016	0.0164	27	635	540	50	4050	27
28	0.0125	0.0126	0.0127	0.0016	0.0147	26	595	510	55	3950	28
29	0.0112	0.0113	0.0114	0.0015	0.0133	26	560	480	61	3825	29
30	0.0099	0.0100	0.0101	0.0014	0.0119	25	525	450	66	3725	30
31	0.0088	0.0089	0.0090	0.0013	0.0108	24	...	...	..	3450	31
32	0.0079	0.0080	0.0081	0.0012	0.0098	24	...	...	..	3175	32
33	0.0070	0.0071	0.0072	0.0011	0.0088	23	...	...	..	2925	33
34	0.0062	0.0063	0.0064	0.0010	0.0078	22	...	...	..	2675	34
35	0.0055	0.0056	0.0057	0.0009	0.0070	21	...	...	..	2475	35
36	0.0049	0.0050	0.0051	0.0008	0.0063	20	...	...	..	2275	36
37	0.0044	0.0045	0.0046	0.0008	0.0057	20	...	...	..	2100	37
38	0.0039	0.0040	0.0041	0.0007	0.0051	19	...	...	..	1925	38
39	0.0034	0.0035	0.0036	0.0006	0.0045	18	...	...	..	1775	39
40	0.0030	0.0031	0.0032	0.0006	0.0040	17	...	...	..	1625	40
41	0.0027	0.0028	0.0029	0.0005	0.0036	17	...	...	..	1500	41
42	0.0024	0.0025	0.0026	0.0004	0.0032	16	...	...	..	1375	42
43	0.0021	0.0022	0.0023	0.0004	0.0029	15	...	...	..	1250	43
44	0.0019	0.0020	0.0021	0.0004	0.0027	14	...	...	..	1175	44

*This maximum bare wire shall be permitted to be exceeded; see 1.4.9.1.
†For metric equivalents, see 1.5.
NOTE: For direct conversion of inches to millimeters, multiply inches by the factor 25.4 (exact). (This note approved as Authorized Engineering Information 3-11-1987.)

Copyright National Electrical Manufacturers Association
Provided by IHS under license with NEMA
No reproduction or networking permitted without license from IHS
Not for Resale

9009279 0001711 958

Part 3

TEST PROCEDURES

(see 1.4 for General Test Conditions and Definitions)

ROUTINE TESTS

3.1 DIMENSIONS

The increase in dimensions due to the insulation shall be determined in the following manner:

3.1.1 Round Wire

3.1.1.1 FILM COATED

The film coated wire shall be measured at four points, spaced approximately 45 degrees apart, around the circumference. The largest and smallest readings shall be recorded, and the average of these two readings shall be taken as the overall diameter. The insulation shall then be removed at approximately the same position on the wire by means not injurious to the bare wire and the measurements repeated around the bare wire. The average of the largest and smallest readings shall be taken as the diameter of the bare wire. Measuring instruments such as pressure type micrometers, electronic meters, or light wave micrometers shall be permitted to be used in measuring diameters. (See Table 3-1.) The increase in diameter due to the insulation shall be calculated in accordance with the following:

$$\left(\begin{array}{c}\text{Overall}\\ \text{Diameter}\end{array}\right) - \left(\begin{array}{c}\text{Diameter of}\\ \text{Bare Wire}\end{array}\right)$$

3.1.1.1.1 SELF BONDING FILM COATED

The increase in diameter due to the thermoplastic outer coating shall be determined in the following manner:

The overall diameter shall be measured in accordance with 3.1.1.1. The thermoplastic outer coating shall then be removed by immersing the wire for 2 minutes in a solvent which will remove the outer coating without swelling or softening the underlying film coating and then wiping the wire with a cheesecloth pad dampened with solvent. The dimension of the wire over the underlying film coating shall be measured at four points, spaced approximately 45 degrees apart, around the circumference of the wire. The average of the largest and smallest readings shall be taken as the diameter over the underlying film coated wire. The increase in the diameter due to the thermoplastic outer coating shall be calculated in accordance with the following:

$$\left(\begin{array}{c}\text{Diameter over thermo-}\\ \text{plastic outer coating}\end{array}\right) - \left(\begin{array}{c}\text{Diameter over under-}\\ \text{lying film coated wire}\end{array}\right)$$

The increase in diameter due to the underlying film coating shall be determined in accordance with 3.1.1.1.

3.1.1.2 FIBROUS COVERED

Fibrous covered wire shall be measured at three locations, spaced approximately 1 foot (300 mm) apart. In each set of measurements, the diameter shall be measured at two points on the circumference, approximately 90 degrees apart. The average of these readings shall be taken as the overall diameter. A pressure type micrometer shall be used to measure the diameters. (See Table 3-1.) The insulation shall then be removed at approximately the same positions on the wire by means not injurious to the bare wire and the measurements repeated around the bare wire. In the case of glass fiber or polyester glass fiber covering over film coated wire, the film coating as well as the glass fibers shall be removed and the measurements repeated around the bare wire. In each set of measurements, the diameter shall be measured at two points on the circumference, approximately 90 degrees apart. The increase in diameter due to the insulation shall be calculated in accordance with the following:

$$\left(\begin{array}{c}\text{Overall}\\ \text{Diameter}\end{array}\right) - \left(\begin{array}{c}\text{Diameter of}\\ \text{Bare Wire}\end{array}\right)$$

3.1.1.3 PAPER COVERED

Dimensions of paper covered wire shall be measured in accordance with 3.1.1.2. See Table 3-1.

3.1.2 Rectangular Wire

3.1.2.1 FILM COATED

The increase in dimension due to the insulation shall be measured on three carefully straightened specimens, each at least 3 inches (75 mm) long, taken from the reel at 1-foot (300 mm) intervals. Straightening shall be accomplished by stretching the wire not more than 1 percent to remove bends or kinks. One measurement of the dimension shall be made over the insulation of each specimen. The average of the three readings shall be taken as the overall dimension. The insulation shall then be removed at these points by means not injurious to the bare wire, the same measurements made, and the average taken as the dimension of the bare wire. A pressure type micrometer shall be used to measure the dimension. (See Table 3-1.)

Thickness—The increase in the thickness due to the insulation shall be calculated in accordance with the following:

$$\left(\begin{array}{c}\text{Overall}\\ \text{Thickness}\end{array}\right) - \left(\begin{array}{c}\text{Thickness of}\\ \text{Bare Wire}\end{array}\right)$$

Copyright National Electrical Manufacturers Association
Provided by IHS under license with NEMA
No reproduction or networking permitted without license from IHS
Not for Resale

9009279 0001712 894

Width— The increase in width shall be determined in the same manner as the increase in thickness.

Radii — The radii of bare wire shall be measured by standard radius gauge.

3.1.2.2 FIBROUS COVERED

Dimensions of fibrous covered wire shall be measured in accordance with 3.1.2.1. (See Table 3-1.)

3.1.2.3 PAPER COVERED

Dimensions of paper covered wire shall be measured in accordance with 3.1.2.1. (See Table 3-1.)

Table 3-1
MICROMETER SPECIFICATION ON ANVIL DIAMETER AND SPINDLE FORCE

		Film Coated	Fibrous Coated	Paper
Anvil Diameter	Round & Rectangular	0.250 in. (6 mm)	0.250 in. (6 mm)	0.250 in. (6 mm)
Spindle Force	Round	25 AWG & Smaller 3-5 oz. (85-142 gms)	Same as Film Coated	
		Larger than 25 AWG 8-10 oz. (227-283 gms)	Same as Film Coated	
	Rectangular	All Sizes 8-10 oz. (227-283 gms)	Same as Film Coated	
	Round & Rectangular			All Sizes (2.5-3.0 lbs.) (1135-1362 gms)

3.2 ADHERENCE AND FLEXIBILITY

3.2.1 Round Wire

3.2.1.1 FILM COATED

A specimen having an effective length of 10 inches (250 mm) shall be elongated, wound ten turns around a mandrel, and examined in accordance with Table 3-2.

3.2.1.1.1 PLAIN ENAMEL COATED ONLY

A specimen having an effective length of 10 inches (250 mm) shall be elongated 15 percent or to the breaking point, whichever is less, by a sudden jerk, and examined with normal vision for sizes 25 to 30 AWG, and 6X to 10X magnification for sizes 31 to 44 AWG.

3.2.1.2 FIBROUS COVERED

3.2.1.2.1 PAPER COVERED, GLASS COVERED OR POLYESTER GLASS COVERED

A specimen shall be wound three turns around a mandrel having the diameter specified in Part 2. The specimen shall be examined with normal vision.

3.2.1.2.2 POLYESTER GLASS FIBER COVERED

A specimen having an effective length of 10 inches (250 mm) shall be elongated 25 percent or to its breaking point, whichever is less, at a rate of 12 inches ± 1 inch (300 mm ± 25 mm) per minute. The specimen shall be examined with normal vision.

Copyright National Electrical Manufacturers Association
Provided by IHS under license with NEMA
No reproduction or networking permitted without license from IHS
Not for Resale

Table 3-2
ELONGATION AND MANDREL DIAMETERS

AWG Size	Elongation Rate	Minimum Elongation, Percent	Mandrel Diameter	Examined With
4–9	12″ ± 1″ per minute‡	30	None	Normal vision
10–13	12″ ± 1″ per minute‡	25	5d	Normal vision
14–20	Sudden jerk	20	3d	Normal vision
21–30	Sudden jerk	15	1d	Normal vision
31–44	Sudden jerk	20†	3d	6X–10X magnification
45–56	Sudden jerk	Breaking point	None	10X–15X magnification
Aluminum				
4–9	12″ ± 1″ per minute‡	15	None	Normal vision
10–15	12″ ± 1″ per minute‡	15	5d	Normal vision
16–20	Sudden jerk	15†	3d	Normal vision
21–25	Sudden jerk	10†	3d	Normal vision

†Or to its breaking point, whichever is less ‡300 mm ± 25 mm per minute.

3.2.1.2.3 PAPER COVERED

A specimen having an effective length of 10 inches (250 mm) shall be elongated to the values shown in Table 3-3 at a rate of 12 inches ± 1 inch (300 mm ± 25 mm) per minute. The specimen shall be examined with normal vision.

Table 3-3
ELONGATION

AWG Size	Minimum Elongation, Percent
8–13	15
14–22	10
23–32	8

3.2.2 Rectangular Wire

3.2.2.1 FILM COATED

A specimen having an effective length of 10 inches (250 mm) shall be elongated 30 percent for copper, 15 percent for aluminum, at a rate of 12 inches ± 1 inch (300 mm ± 25 mm) per minute. The specimen shall be examined with normal vision.

3.2.2.2 FIBROUS COVERED

3.2.2.2.1 WITHOUT UNDERLYING FILM COATING

A specimen shall be wound flatwise 180 degrees around a mandrel having a diameter of 10 times the thickness of the bare wire, and the bent portion shall be buried in lead, nickel or nickel-plated shot, 0.080 to 0.110 inch in diameter (2.0 mm to 2.8 mm). A source of 60-hertz voltage of a substantially sinusoidal wave form shall be applied between the conductor and the shot.

3.2.2.2.2 WITH UNDERLYING FILM COATING

A specimen having an effective length of 10 inches (250 mm) shall be elongated 20 percent at a rate of 12 inches ± 1 inch (300 mm ± 25 mm) per minute. The specimen shall be examined with normal vision.

3.3 ELONGATION

For rectangular and round magnet wire larger than 14 AWG, testing shall be by either the Springback Test in accordance with 3.6.2 or the Elongation Test in the following manner:

3.3.1 Round Wire

3.3.1.1 FILM COATED

A specimen having an effective length of 10 inches (250 mm) shall be elongated to its breaking point at a rate of 12 inches ± 1 inch (300 mm ± 25 mm) per minute. (See Figure 3-1.) The gripping jaws shall be such that a break will not occur within ¼ inch (6 mm) of either jaw. The travel distance of the jaw at the instant of break shall be noted and the percentage of elongation calculated.

3.3.1.2 FIBROUS COVERED

3.3.1.2.1 GLASS FIBER COVERED

The wire shall be tested in accordance with 3.3.1.1. In case of failure of glass fiber covered wire sizes 21 AWG and larger, the fibrous covering shall be removed from another specimen and the wire tested. On sizes 22 AWG and smaller, the fibrous covering shall be removed from the specimen prior to testing.

3.3.1.2.2 POLYESTER GLASS FIBER COVERED

The wire shall be tested in accordance with 3.3.1.1.

Copyright National Electrical Manufacturers Association
Provided by IHS under license with NEMA
No reproduction or networking permitted without license from IHS
Not for Resale

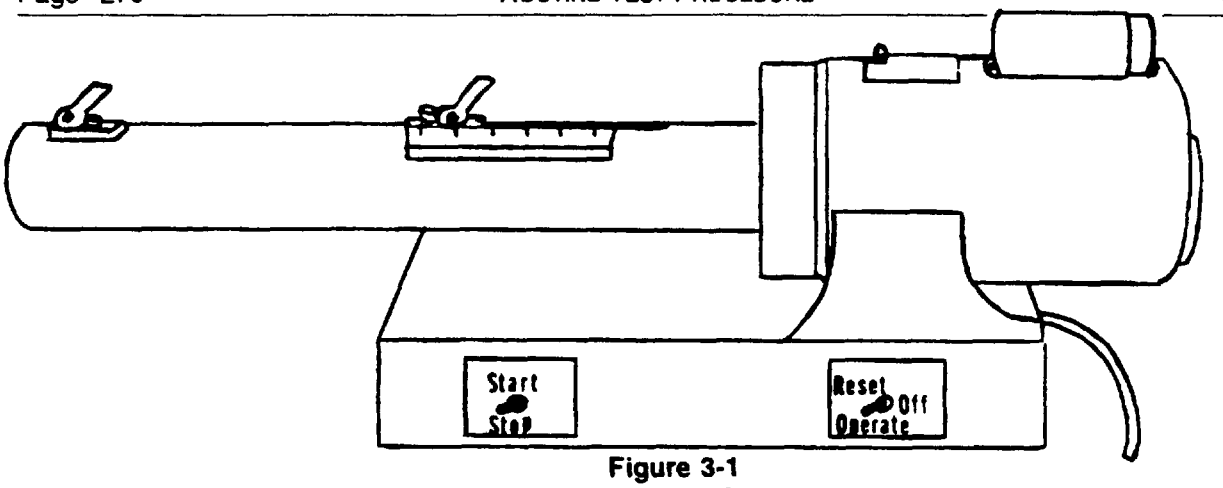

Figure 3-1
MACHINE FOR ELONGATION

3.3.1.2.3 PAPER COVERED

The wire shall be tested in accordance with 3.3.1.1.

3.3.1.2.4 COTTON, SILK, OR NYLON COVERED

After the fibrous covering has been carefully removed, the specimen shall be tested in accordance with 3.3.1.1.

3.3.2 Rectangular Wire

3.3.2.1 FILM COATED

The wire shall be tested in accordance with 3.3.1.1.

3.3.2.2 FIBROUS COVERED

3.3.2.2.1 GLASS OR POLYESTER GLASS COVERED

The wire shall be tested in accordance with 3.3.1.1.

3.3.2.2.2 PAPER OR PAPER AND COTTON COVERED

After the covering has been carefully removed, the specimen shall be tested in accordance with 3.3.1.1.

3.4 HEAT SHOCK

3.4.1 Round Wire

3.4.1.1 FILM COATED

A specimen having an effective length of 10 inches (250 mm) shall be elongated at the rate given and wound not more than ten turns around a mandrel having the diameter given in Table 3-4. The specimen shall be removed from the mandrel and placed in a circulating air oven for ½ hour at not less than the temperature specified in Part 2. The specimen shall be allowed to cool to room temperature and shall then be examined in accordance with Table 3-4.

3.4.2 Rectangular Wire

3.4.2.1 FILM COATED

A specimen having an effective length of 10 inches (250 mm) shall be elongated at a rate of 12 inches ± 1 inch (300 mm ± 25 mm) per minute to the percent specified in Part 2 and placed in a circulating air oven at not less than the temperature specified in Part 2 for ½ hour. The specimen shall be allowed to cool to room temperature and shall then be examined with normal vision.

Table 3-4
ELONGATION AND MANDREL DIAMETERS

AWG Size	Elongation Rate	Minimum Elongation, Percent	Mandrel Diameter	Examined With
Copper				
4–9	12″ ± 1″ per minute‡	30	None	Normal vision
10–13	12″ ± 1″ per minute‡	25	5d	Normal vision
14–20	Sudden jerk	20	3d	Normal vision
31–44	Sudden jerk	20†	3d	6X–10X magnification
Aluminum				
4–9	12″ ± 1″ per minute‡	15	None	Normal vision
10–15	12″ ± 1″ per minute‡	15	5d	Normal vision
16–20	Sudden jerk	15†	3d	Normal vision
21–25	Sudden jerk	10†	3d	Normal vision

†Or to its breaking point, whichever is less.
‡300 mm ± 25 mm per minute.

Copyright National Electrical Manufacturers Association
Provided by IHS under license with NEMA
No reproduction or networking permitted without license from IHS
Not for Resale

9009279 0001715 5T3

3.5 (RESERVED)

3.6 SPRINGBACK

3.6.1 Round Wire

3.6.1.1 FILM COATED, SIZES 14 THROUGH 30 AWG

A specimen shall be wound three turns at a rate of 5 to 10 rpm around a mandrel having the diameter shown in Table 3-5 under the tension indicated. One end of the coil so formed shall be held and the other allowed to unwind slowly.

The springback tester (see Figure 3-2) shall be operated in accordance with the following procedure:

1. The instrument shall be mounted with the shaft of the mandrel horizontal at a height approximately 4.5 feet (1.4 meters) above the floor.
2. The mandrel shall be locked in position so that the hole for fastening the wire is in a vertical position to correspond with zero on the dials.
3. The wire to be tested shall be removed carefully from the package in such a way that the wire will not be subjected to extra bends or tension and shall be wound onto the mandrel in the same direction as originally coiled.
4. The wire shall be inserted in the hole, using the size of mandrel and weight specified in Table 3-5.
5. The wire shall be layer-wound by turning the mandrel counterclockwise through exactly three revolutions.
6. A mark with a crayon, pencil, or ink shall be made on the last turn opposite the zero mark on the dial.
7. The wire shall be held in place with the left hand on the mandrel and the weight removed.
8. The wire shall be cut, leaving approximately ½ inch (12 mm) of wire past the mark previously scribed on the last turn. This ½-inch (12 mm) length shall be bent to a vertical position.
9. By placing a pencil to the left of the vertical piece of wire, the coil shall be allowed to unwind slowly without jerking. If the wire is permitted to spring back suddenly, erroneous results are obtained.
10. The indicating point on the free end of the coil shall come to rest on the curve shown on each dial.
11. The springback value shall be the angle through which the mark on the last turn has moved.

NOTE: A soft wire will exhibit less tendency to spring back; hence the figure representing the degrees return (springback) will be less than that for a harder wire. (This note is classified as Authorized Engineering Information.)

3.6.2 Rectangular and Round Magnet Wires Larger Than 14 AWG

For rectangular and round magnet wires larger than 14 AWG, testing shall be by either the Elongation Test in accordance with 3.3, or the Springback test in the following manner:

3.6.2.1 BARE OR INSULATED

3.6.2.1.1 PRINCIPLE OF TEST

The test consists of bending a specimen over a given angle, then removing the load and measuring the springback in degrees.

3.6.2.1.2 SPECIMEN

The sample shall be at least 48 inches (1200 mm) long and shall be removed from the spool with as little bending as possible. It shall be carefully straightened by hand and cut into 16 inch (400 mm) specimens. Cold hardening shall be minimized. Elongation by machines shall NOT be used for straightening.

3.6.2.1.3 TEST APPARATUS

The springback is determined by means of the apparatus shown in Figure 3-2A, consisting essentially of two

Table 3-5
MANDREL DIAMETERS AND TENSIONS

AWG Size	Mandrel Diameter		Tension	
	inches	mm	Ounces	N
14–20	3¼	82.6	16	4.45
21–24	1⅞	47.6	4	1.11
25–26	1⅞	47.6	2	0.56
27–30	¾	19.0	2	0.56

Copyright National Electrical Manufacturers Association
Provided by IHS under license with NEMA
No reproduction or networking permitted without license from IHS
Not for Resale

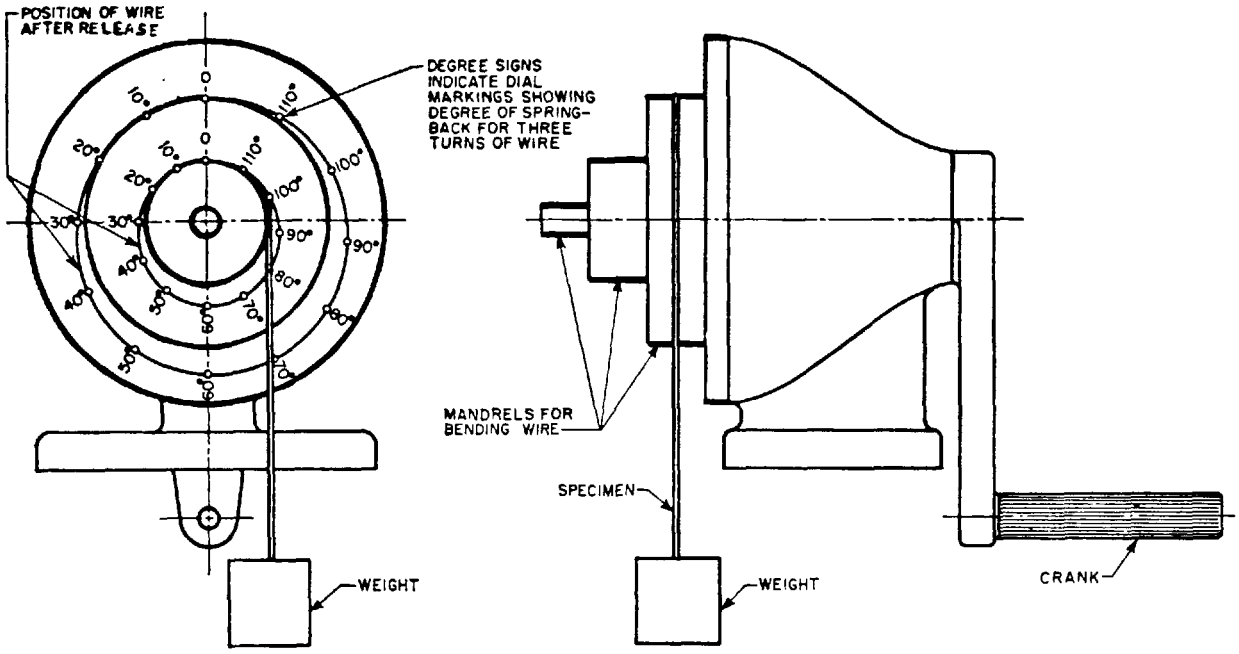

Figure 3-2
MACHINE FOR SPRINGBACK

smooth jaws, one fixed (2), the other moveable (1), and a sector graduated in degrees (5) with the 0-10° sector of the scale graduated in 0.5° increments.

The test apparatus shall be placed in a horizontal position on the test table. The graduated sector is an arc placed in at plane at 90° to the clamp faces. Its center is located at the outer edge of the fixed jaw (3). The lever arm whose fulcrum is placed at the center of the arc can move over the graduated sector in the horizontal plane. The lever arm shall have a sharp pointer or marker to clearly indicate the springback. On the lever arm, which has a 12 inch (305 mm) length scaled off in tenths of an inch (or mm), there is a moveable slider (4).

3.6.2.1.4 TEST PROCEDURE

The test shall be made by bending the wire specimens in the same direction that the wire was bent when wound on the spool. The bare wire thickness (or round wire diameter) shall be measured for determining the actual position of the slider. This thickness (or diameter) multiplied by 40 locates the slider to a specific dimension along the lever arm. The wire is moderately tightned between the jaws with the direction of the former curvature up, or away from the operator, to leave a free length of specimen extending approximately 0.5 inches (13 mm) beyond the slider knife edge.

By means of the lever arm, starting at the horizontal position (the 30° scale mark, position 1), the wire is gently bent 30° (to the 0° scale mark, position 2). The time of this bending shall be not less than 2 seconds nor more than 5 seconds. The specimen is held at the 0° point (a 30° bend) for a maximum of 2 seconds.

The lever arm is gently returned in the reverse direction at the same angular rate at which it was raised until the slider knife edge moves away from the wire specimen. The lever arm is then raised until the slider knife edge again just contacts the wire specimen without moving it. The lever arm pointer will now indicate the springback.

3.6.2.1.5 VALUE OF SPRINGBACK

The value of springback (α) is read directly on the scale shwon by the position of the lever arm on the graduated sector (in position 3).

The operator shall test three specimens per sample size. The results of the three specimens must not differ by more than 0.5° over a consecutive length of sample. The final result shall be the average of the three specimens.

Copyright National Electrical Manufacturers Association
Provided by IHS under license with NEMA
No reproduction or networking permitted without license from IHS
Not for Resale

9009279 0001717 376

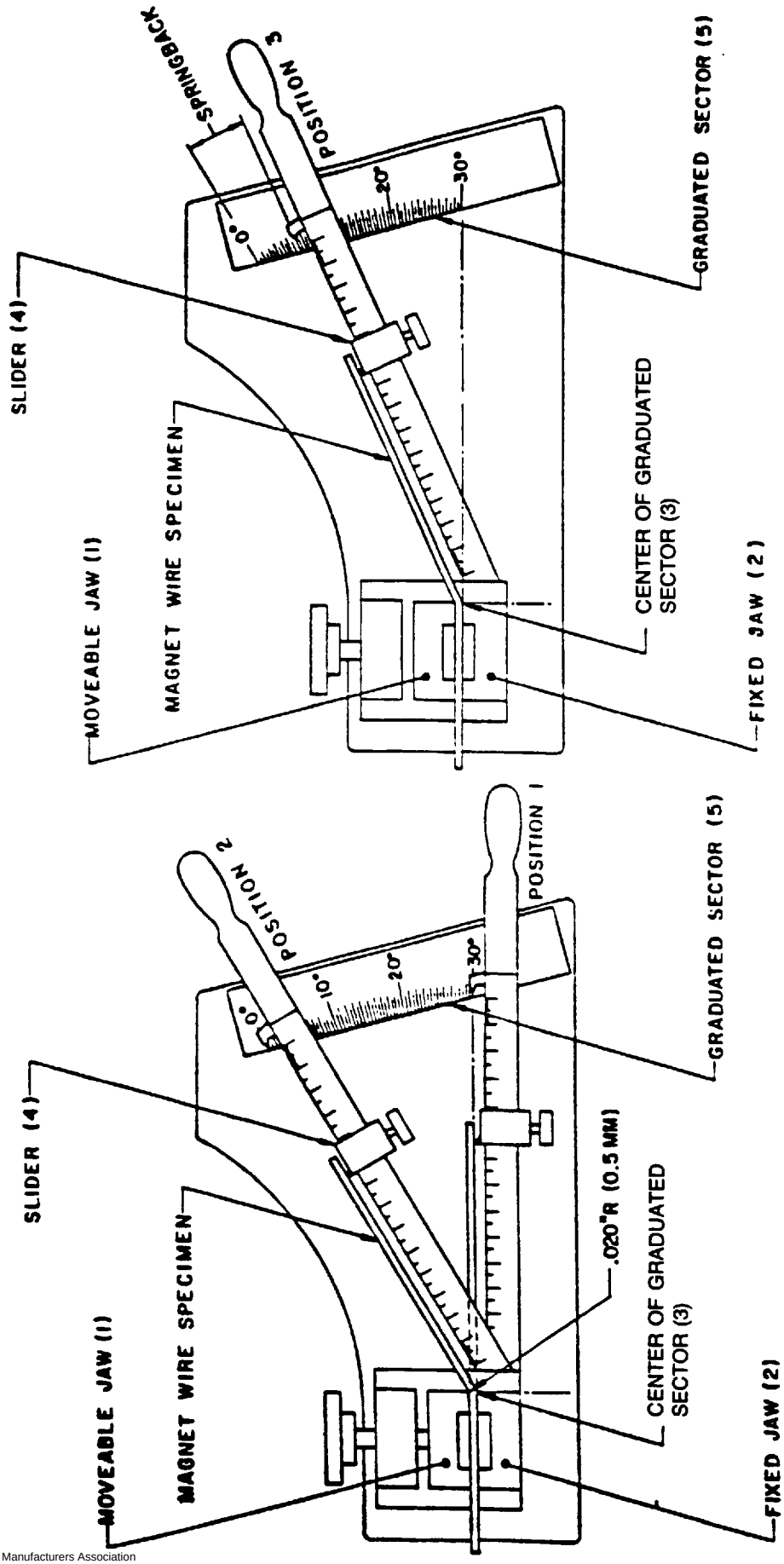

Figure 3-2a
APPARATUS FOR MEASUREMENT OF SPRINGBACK

Copyright National Electrical Manufacturers Association
Provided by IHS under license with NEMA
No reproduction or networking permitted without license from IHS
Not for Resale

9009279 0001718 202

3.7 DIELECTRIC STRENGTH

3.7.1 Round Wire

3.7.1.1 FILM COATED

3.7.1.1.1 ALUMINUM SIZES 4 THROUGH 7 AWG AND COPPER SIZES 4 THROUGH 9 AWG

Electrodes shall be prepared by applying a ¼-inch (6 mm) wide thin metal foil to the center of a ½-inch (12 mm) wide pressure-sensitive tape. The tape shall be cut into strips each about 3 inches (75 mm) long. Four of these electrodes shall be applied at right angles to the specimen at intervals of approximately 2 inches (50 mm) and shall be wrapped smoothly and firmly around the specimen a minimum of 1½ complete turns, with the metal surface of the foil in contact with the insulation.

3.7.1.1.2 ALUMINUM SIZES 8 THROUGH 25 AWG AND COPPER SIZES 10 THROUGH 44 AWG

A specimen of wire shall be formed into a "U" shape and the two legs shall be twisted together for a distance of approximately 4.75 inches (120 mm). The total tension on the two legs while being twisted and the total number of twists shall be as shown in Table 3-6. The loop shall be cut and the ends shall be carefully and adequately separated. There shall be no sharp bends in the specimen or damage to the insulation.

3.7.1.1.3 TEST PROCEDURE

A source of 60-hertz voltage of a substantially sinusoidal wave form shall be applied separately and consecutively between each metal foil electrode and the conductor or between the two legs.

The testing transformer shall have a rating of 500 volt-amperes or more and shall provide an essentially undistorted wave form under test conditions.

Fault current of the circuit shall be 1.5 to 15 milliamperes.

The voltage shall start at zero and shall be increased uniformly at the rate of approximately 500 volts per second until breakdown occurs. In the event that breakdown occurs in less than 5 seconds, the rate of increase in voltage shall be reduced to approximately 100 volts per second.

The breakdown voltage (ASTM D 149) shall be measured with a meter calibrated in rms (root mean square) volts in accordance with one of the methods described in ANSI/IEEE Std 4).

In case of failure under prevailing laboratory conditions, another specimen of wire shall be dried in an unbent and unstretched condition for 90 seconds at 150° ± 3°C (302°F ± 5°F), then exposed to 50 percent ± 5 percent relative humidity for a minimum of 1 hour at 15°C (59°F) to 25°C (77°F) and then tested within 15 minutes after removal from the humidity chamber in accordance with the foregoing.

Table 3-6
TENSIONS AND TWISTS

AWG Size	Total Tension on Specimen	Total Number of Twists
8–9*	24 Pounds (107N)	3
10–11	24 Pounds (107N)	3
12–14	12 Pounds (53N)	4
15–17	6 Pounds (27N)	6
18–20	3 Pounds (13N)	8
21–23	1.5 Pounds (7N)	12
24–26	340 Grams (3.3N)	16
27–29	170 Grams (1.7N)	20
30–32	85 Grams (0.8N)	25
33–35	40 Grams (0.4N)	31
36–38	20 Grams (0.2N)	36
39–41	10 Grams (0.1N)	41
42–44	5 Grams (0.05N)	46

*Aluminum only.

3.7.1.2 FIBROUS COVERED

3.7.1.2.1 GLASS FIBER COVERED AND POLYESTER GLASS FIBER COVERED

1. *Sizes 9 AWG and Larger*
   Specimens shall be prepared and tested in accordance with 3.7.1.1.1 and 3.7.1.1.3.
2. *Sizes 10 AWG and Smaller— Wound Pair Test*
   A wire shall be bent over the hook of the served wire specimen winder (see Figure 3-3) and wound in a manner similar to that described in 3.7.1.1.2 for the film coated twisted pair, but without axial twist in the conductor, for a distance of 4.75 inches (120 mm). The tension on each wire of the pair shall be one-half that given in Table 3-6. The total number of turns shall be as shown in Table 3-6. The ends shall be carefully and adequately separated, and there shall be no sharp bends in the specimen or damage to the insulation. The specimen shall be tested in accordance with 3.7.1.1.3.

Copyright National Electrical Manufacturers Association
Provided by IHS under license with NEMA
No reproduction or networking permitted without license from IHS
Not for Resale

9009279 0001719 149

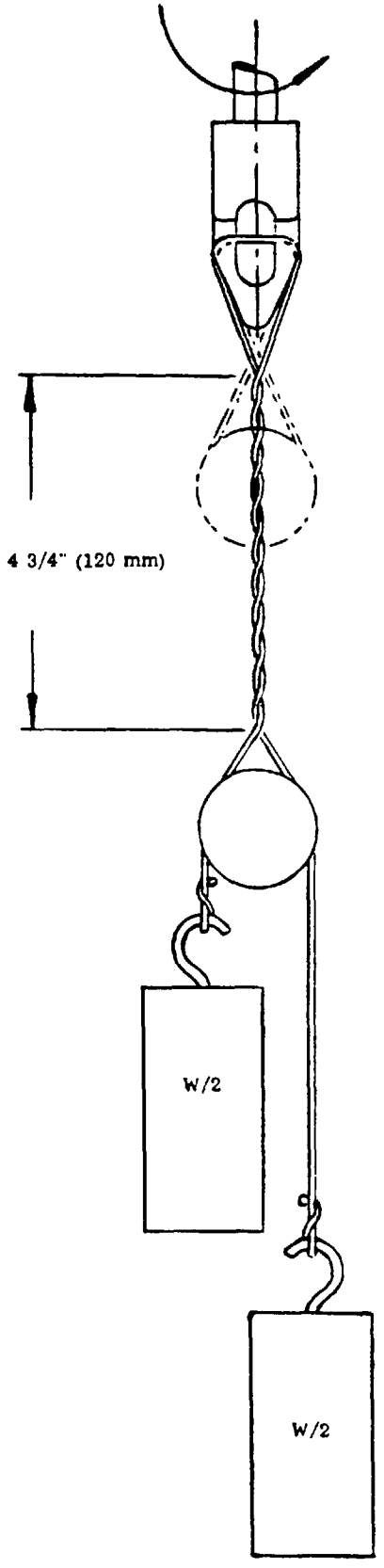

Figure 3-3
SERVED WIRE SPECIMEN WINDER

3. *Sizes 10 AWG and Smaller—Layer Test*
Two specimens shall be wound, one on top of the other, for a distance of approximately 1 inch (25 mm) on a smooth mandrel of insulating material. The diameter of the mandrel shall be in accordance with Part 2. The ends of each of the windings shall be secured in such a manner that the two layers are maintained in intimate contact and there is no loosening of the convolutions. The specimens shall be tested in accordance with 3.7.1.1.3.

3.7.1.2.2 PAPER COVERED

1. *Sizes 9 AWG and Larger*
Specimens shall be prepared and tested in accordance with 3.7.1.1.1 and 3.7.1.1.3.
2. *Sizes 10 AWG and Smaller*
Specimens shall be prepared and tested in accordance with 3.7.1.2.1, item 3.

3.7.2 Rectangular Wire

3.7.2.1 FILM COATED

Specimens shall be prepared and tested in accordance with 3.7.1.1.1 and 3.7.1.1.3. The breakdown voltage in at least three of the four locations where the electrodes are applied to the test specimen, shall be not less than the values specified in individual Sections in Part 2.

3.7.2.2 FIBROUS COVERED

Specimens shall be prepared and tested in accordance with 3.7.1.1.1 and 3.7.1.1.3. The breakdown voltage in at least three of the four locations where the electrodes are applied to the test specimen, shall be not less than the values specified in individual Sections in Part 2.

3.8 CONTINUITY

3.8.1 Round Wire

3.8.1.1 FILM COATED

3.8.1.1.1 HIGH-VOLTAGE DIRECT-CURRENT CONTINUITY—SIZES 14 THROUGH 44 AWG (1.628 THROUGH 0.051 MM NOMINAL CONDUCTOR DIAMETER)

One hundred feet (30.5 mm) of film-coated wire shall be passed over two energized stainless steel, freely rotating "V" grooved electrode sheaves at a speed of 60 ± 3 feet (18 ± 1 m) per minute. A grounded freely rotating metallic guide sheave shall be used before and after the electrode sheaves. The conductor shall be electrically grounded by means of either a ground terminal or a

Copyright National Electrical Manufacturers Association
Provided by IHS under license with NEMA
No reproduction or networking permitted without license from IHS
Not for Resale

9009279 0001720 960

grounded take-up drum. Pay-off equipment shall be designed to prevent damage to the wire under test. The open-circuit test voltage maintained between the energized (positive polarity) electrode sheaves and the grounded conductor shall be as indicated in Table 3-7.

Table 3-7
TEST VOLTAGE
(dc volts ±5%)

AWG Size	Single	Heavy	Triple
Copper			
14–24	1000	1500	2000
25–30	750	1000	1500
31–35	500	750	—
36–44	350	500	—
Aluminum			
14–24	500	1500	—

The high-voltage power supply shall be regulated and shall provide to the electrode sheaves a smooth filtered direct-current voltage free of transient over-voltage "spikes." All voltage settings shall be checked with a high-impedance device, such as an electrostatic voltmeter. Sufficient internal resistance shall be provided so that rapid collapse of the applied test voltage occurs when a fault is detected. Rapid recovery of the voltage to the test level is also required.

The steady-state short-circuit current shall be limited internally to 25 ± 5 microamperes at any test voltage setting. A 50-megohm fault resistance at the electrode sheaves shall not cause more than a 75-percent drop in voltage of the high-voltage electrode sheaves at any voltage setting.

The sensitivity of the fault detection circuit shall be such that the threshold fault current will be as shown in Table 3-8, with a tolerance of ±10 percent. The speed of response of the fault circuit shall be 4 to 6 milliseconds. The fault circuit shall be designed to repeat at the rate of 450 ± 45 counts per minute when bare wire is passed over the electrode sheaves.

Table 3-8
THRESHOLD FAULT CURRENT

dc Test Voltage, Volts	Threshold Fault Current Microamperes, ±10%
3000	16
2500	14
2000	12
1500	10
1000	8
750	7
500	6
	5

The fault counter shall be a digital readout device such as an electromechanical counter or its electronic equivalent. Means for resetting the counter to zero shall be included. Additional recorder equipment for making records of fault patterns is optional.

For sizes 14 through 24 AWG, dual high voltage electrode sheaves shall be constructed of stainless steel with an outside diameter of 1.69 inches (43 mm), with a "V" groove such that the included angle will be 90 ± 3° and the root diameter 1.5 + 0, −0.01 inch (38 + 0, −0.25 mm).

The electrode sheaves' centers shall be separated by 1.81 ± 0.005 inches (46 ± 0.13 mm).

The electrode sheave shall have a contact length of 1.0 + 0, −0.1 inch (25.4 mm + 0, −2.5 mm). The electrode sheaves shall be placed between two grounded guide sheaves and on a line offset 42 ± 3° from a line intersecting the center of the guide sheaves. The two grounded guide sheaves shall be of the same material, and their centers shall be spaced 5.50 inches (140 mm) apart on a horizontal line. These grounded sheaves shall be constructed with an outside diameter of 2 inches (51 mm), with a "V" groove such that the included angle will be 45 ± 3° and the root diameter 1.5 ± 0.1 inch (38 ± 2.5 mm). (See Figure 3-3a.)

For sizes 31 through 44 AWG, smaller dual electrode sheaves shall replace the electrode sheaves described above. These electrode sheaves shall be made of stainless steel and shall have an outside diameter of 1.13 ± 0.1 inch (28.7 ± 0.25 mm) and a "V" shaped groove such that the included angle will be 90 ± 3° and the root diameter will be 1.00 + 0, −0.01 inch (25.4 + 0, −0.25 mm). The centers of the dual electrode sheaves shall be separated by 1.25 ± 0.005 inch (32 ± 0.13 mm). The dual electrode sheaves will be adjusted to an angle resulting in 0.9 ± 0.1 inch (22.9 ± 2.5 mm) wire contact with each electrode sheave. (See Figure 3-3b.)

For sizes 25 through 30 AWG, either pair of high-voltage dual electrode sheaves, described above, shall be used.

The ground insulation for the electrode sheaves shall be a high-resistivity material, nonhygroscopic, and easily cleaned, and shall be so dimensioned as to support a minimum of 3000 volts direct current indefinitely. All edges of the electrode sheaves shall be well rounded to minimize corona.

A surge damping resistor of 4.7 megohms ± 10 percent shall be installed in the high-voltage line at the electrode sheaves connection. No shielding shall be used on the high-voltage lead since a minimum capacitance to ground is sought during switching and counting events.

The test device shall include such wire handling equipment as will provide the wire speed stipulated and shall be capable of handling wire sizes 14 through 44 AWG. A length indicator with a preset shut-off feature shall be included so that exact lengths can be monitored. The drive

Copyright National Electrical Manufacturers Association
Provided by IHS under license with NEMA
No reproduction or networking permitted without license from IHS
Not for Resale

sufficient power to maintain speed under the heaviest load.

In case of failure, another wire specimen shall be dried to 60 ± 3 °C (140 ± 5 °F) for 15 to 30 minutes in a forced draft oven, allowed to cool to room temperature, and tested in accordance with the foregoing procedure.

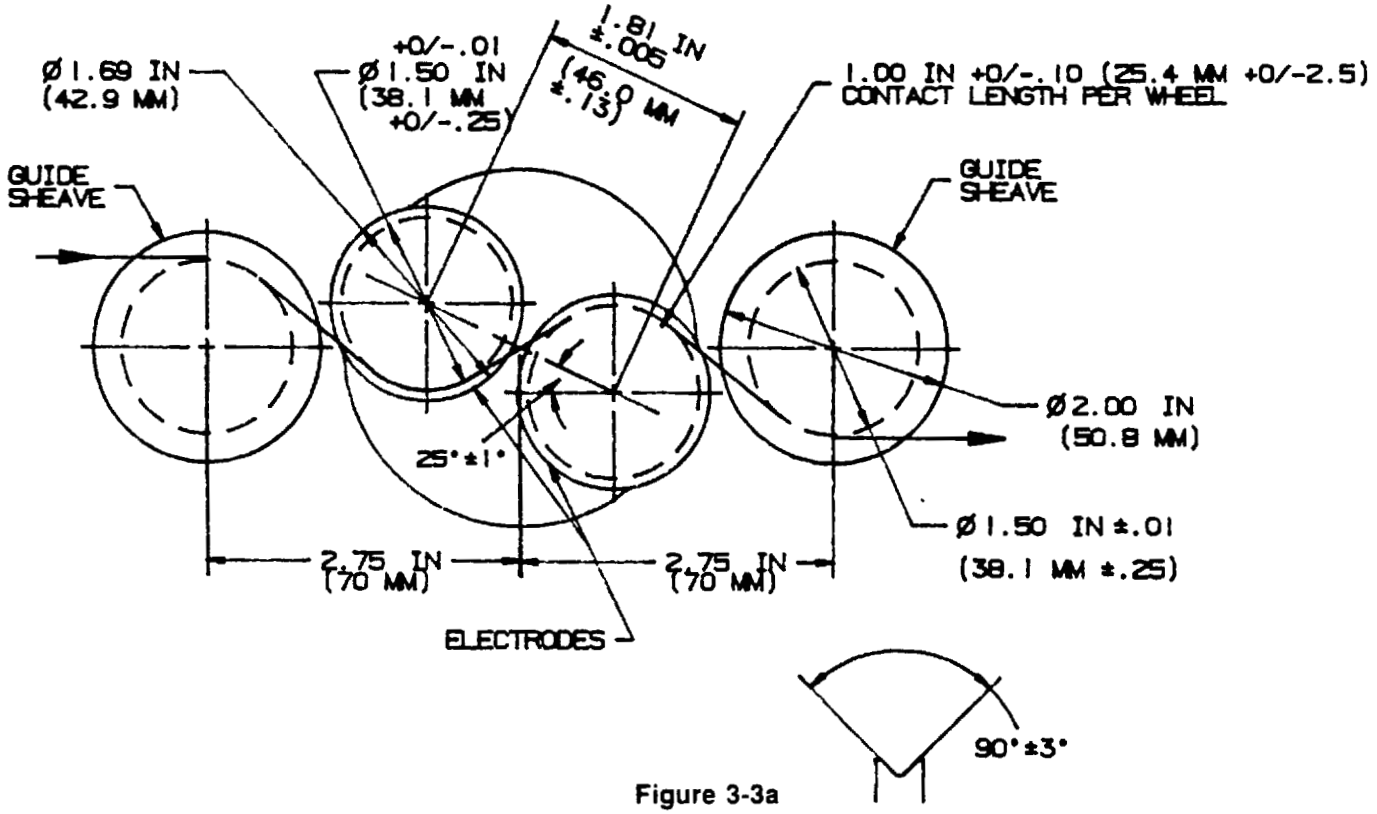

Figure 3-3a
HIGH VOLTAGE DIRECT-CURRENT CONTINUITY SHEAVES FOR WIRE SIZES 14 THROUGH 30 AWG, 1.62 THROUGH 6.254 MM

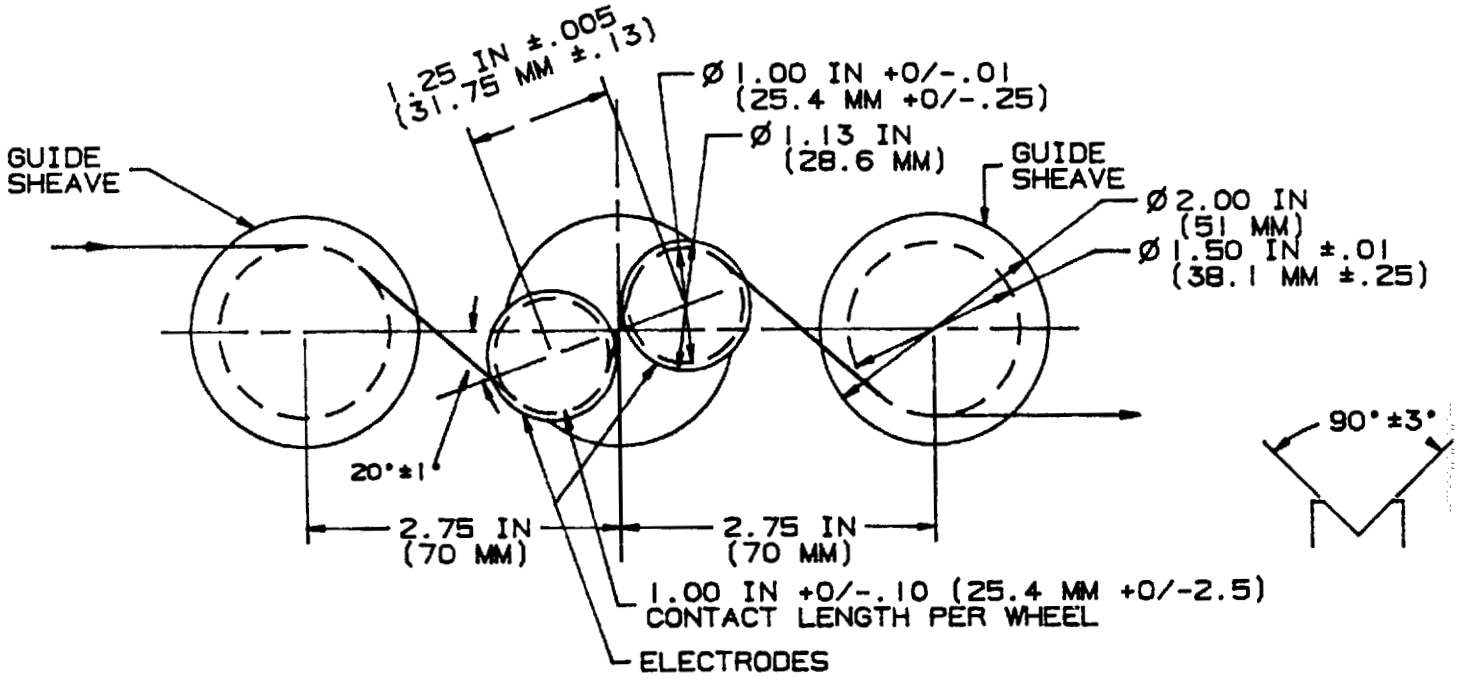

Figure 3-3b
HIGH VOLTAGE DIRECT-CURRENT CONTINUITY SHEAVES FOR WIRE SIZES 25 THROUGH 44 AWG, 0.455 THROUGH 0.051

Copyright National Electrical Manufacturers Association
Provided by IHS under license with NEMA
No reproduction or networking permitted without license from IHS
Not for Resale

1. *Definitions*
   a. *Fault.* Any defect (or series of defects) in 1 inch (25 mm) of wire which allows sufficient current flow to activate the fault detection circuit.
   b. *Test Voltage.* The open circuit voltage applied across the film insulation.
   c. *Fault Detection Current.* The current flowing from the electrode sheave through the fault detection circuit.
   d. *Sensivity.* The minimum current that will activate the fault counter in the fault detection circuit.

3.8.1.1.2 LOW-VOLTAGE DIRECT-CURRENT CONTINUITY—SIZES 31 THROUGH 56 AWG (0.226 THROUGH 0.0124 MM NOMINAL CONDUCTOR DIAMETER)

One hundred feet (30.5 meters) of film coated wire shall be passed through a bath of mercury or other suitable material (see Figure 3-4) at a speed of 100 feet (30.5 meters) ± 10 percent per minute. The test circuit shall be so arranged that the discontinuity indicating device will operate when the resistance between the conductor and the bath of mercury or other suitable material is less than 5000 ohms but will not operate when the resistance is 10,000 ohms or more. The test circuit shall include a repeating circuit which will indicate 600 breaks per minute ± 10 percent when a bare wire is passed through the bath of mercury or other suitable material. The direct-current test voltage shown in Table 3-9 shall be applied between the bath and the conductor. The number of discontinuities shall be recorded.

Table 3-9
TEST VOLTAGE

AWG Size	dc Voltage
31–34	60
35–40	30
41–46	20
47–50	20
51–56	20

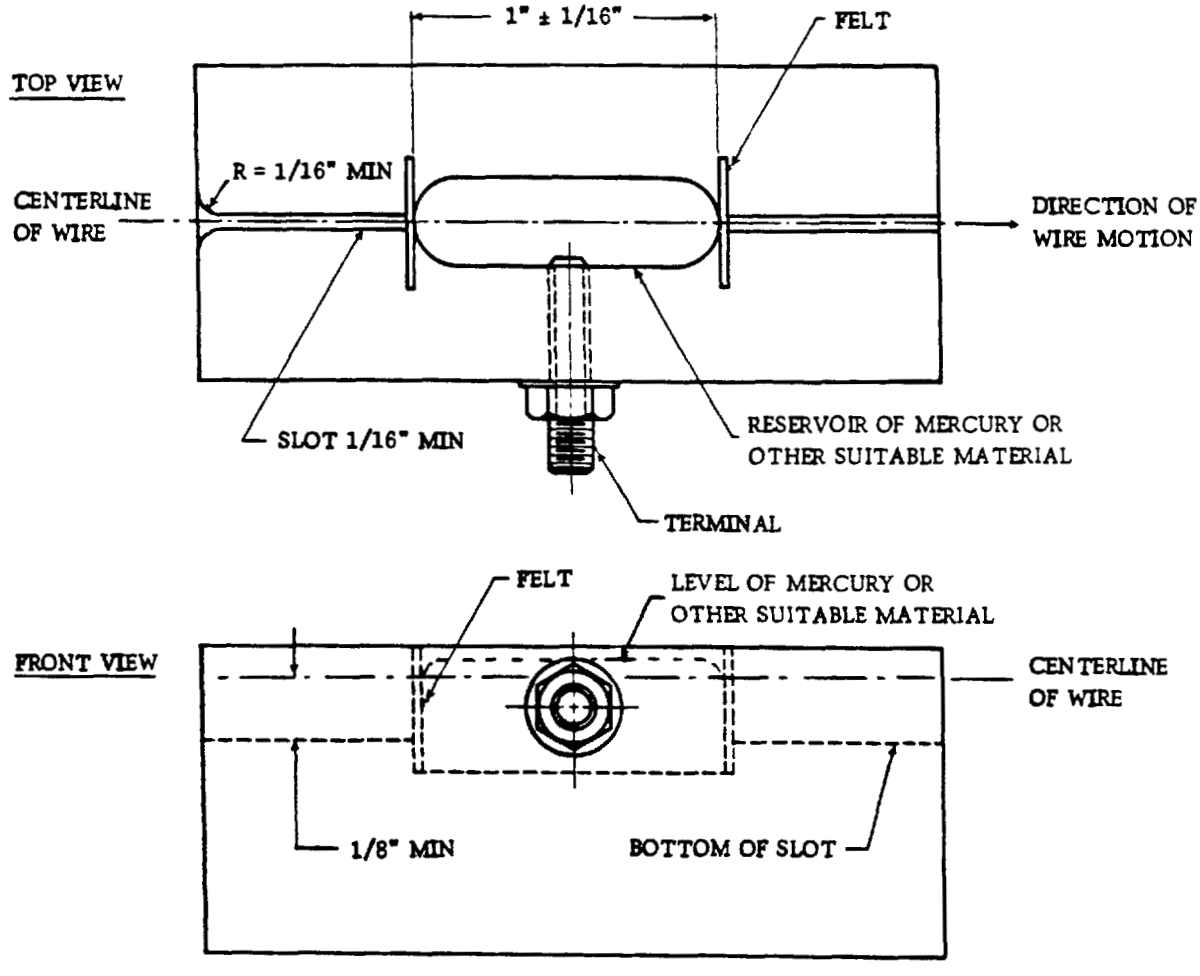

Figure 3-4
BATH OF MERCURY OR OTHER SUITABLE MATERIAL

Copyright National Electrical Manufacturers Association
Provided by IHS under license with NEMA
No reproduction or networking permitted without license from IHS
Not for Resale

9009279 0001723 67T

3.9 COMPLETENESS OF CURE

3.9.1 Round and Rectangular Wire

3.9.1.1 FILM COATED

3.9.1.1.1 POLYVINYL ACETAL TYPES—SIZES 4 THROUGH 44 AWG ROUND AND RECTANGULAR

A specimen which has been annealed by heating for 10 minutes at 125 ± 3°C (257 ± 5°F) shall be immersed, without bending, for 5 minutes in a boiling mixture initially containing 30 percent commercial-grade 3-degree toluene and 70 percent denatured ethyl alcohol by volume.[1] Four inches immersed in the liquid shall be sufficient for this test. After removal from the mixture, rectangular wire, and sizes 4 through 29 AWG shall be examined with normal vision and sizes 30 through 44 AWG shall be examined by 6X to 10X magnification. Swelling of the film within ½ inch (12.7 mm) of the immersed end shall not constitute failure.

When testing polyvinyl acetal coated self-bonding wire, the swelling, blistering, or removal of the thermoplastic outer coating by the solvent mixture shall not be considered as failure.

3.9.1.1.2 AROMATIC POLYIMIDE COATED WIRE ONLY—SIZES 4 THROUGH 50 AWG ROUND, AND RECTANGULAR

The dissipation factor shall be used to determine the degree of cure.

A minimum length of 12 inches (300 mm) of wire shall be wiped with a soft clean cloth or tissue and very carefully formed into an approximate "U" shape. For round sizes 4 through 50 AWG, the radius of any bend shall be not less than twice the diameter of the bare wire. For rectangular wire sizes, the radius of any bend shall be not less than five times the thickness of the bare wire or ½ inch (12.7 mm), whichever is larger.

The bent section shall be immersed at room temperature in mercury or other suitable electrode so that not less than 5 inches (125 mm) of wire is below the surface. The specimen shall be suitably held by an insulated holder, such as cork. The dissipation factor shall be measured at 60 to 1000 hertz by means of an automatic RLC bridge, or its equivalent, connected to the conductor of the specimen and the mercury or other suitable electrode.

In case of failure, another specimen shall be wiped with a soft clean cloth or tissue and conditioned by drying in a circulating air oven for 1 hour at 125 ± 3°C (257 ± 5°F). The wire shall be removed from the oven, cooled to room temperature, and tested in accordance with preceding paragraphs.

3.10 BEND

3.10.1 Rectangular Wire

3.10.1.1 FILM COATED

Two undamaged 10-inch (250 mm) specimens of wire shall be elongated 10 percent and bent approximately 4 inches (10 mm) from each end, one flatwise and one edgewise, on a 90-degree angle over a mandrel as specified in Table 3-10 in the form of a ⅂ (see Figure 3-5). During the bending operation, extreme caution shall be observed to prevent external damage to the film coating such as may occur due to scraping, cutting, etc. A strip of ¼-inch (6 mm) wide conductive adhesive metal foil tape shall be wrapped around the wire smoothly and firmly a minimum of 1½ complete turns at the center of each bend and a dielectric breakdown test made in accordance with 3.7.1.1.3.

3.11 COVERAGE

3.11.1 Round Wire

3.11.1.2 FIBROUS COVERED

The specimen shall be wound ten turns around a mandrel having a diameter equal to ten times the diameter of the bare wire and examined with normal vision.

3.11.2 Rectangular Wire

3.11.2.2 FIBROUS COVERED

The specimen shall be bent on its flatside 180 degrees around a mandrel having the diameter specified in Part 2, and examined with normal vision.

3.12 SOLDERABILITY

3.12.1 Round Copper Wire

3.12.1.1 FILM COATED

3.12.1.1.1 SIZES 14 THROUGH 36 AWG

A single-strand, straight length of wire shall be cut to a 6 inch (150 mm) test specimen. The solder pot shall have a volume sufficient to ensure maintenance of a uniform solder temperature during specimen immersion. The temperature shall be measured within ¼ inch (6 mm) from the immersed end of the specimen. The temperature must be controllable within ± 5°C (9°F) of the relevant specification temperature indicated in Part 2.

[1] Anytime a specimen is immersed in heated or boiling solvent for test purposes, a hazard exists if the vessel containing the solvent mosphere. The recommended procedure is to contain the solvent by fitting the solvent-containing vessel with a reflux

Copyright National Electrical Manufacturers Association
Provided by IHS under license with NEMA
No reproduction or networking permitted without license from IHS
Not for Resale

9009279 0001724 506

Table 3-10
MANDREL SIZES

Flatwise Bend—Thickness		Edgewise Bend—Width		Mandrel	
inches	mm	inches	mm	inches	mm
0.050	1.27 – 1.29	–	–	0.200	5.08
0.051 – 0.063	1.30 – 1.60	–	–	0.250	6.35
0.064 – 0.075	1.63 – 1.90	–	–	0.300	7.62
0.076 – 0.088	1.93 – 2.24	0.076 – 0.088	1.93 – 2.24	0.350	8.89
0.089 – 0.100	2.26 – 2.54	0.089 – 0.100	2.26 – 2.54	0.400	10.16
0.101 – 0.125	2.57 – 3.18	0.101 – 0.125	2.57 – 3.18	0.500	12.70
0.126 – 0.150	3.20 – 3.81	0.126 – 0.150	3.20 – 3.81	0.600	15.24
0.151 – 0.187	3.84 – 4.75	0.151 – 0.187	3.84 – 4.75	0.750	19.05
0.188 – 0.219	4.78 – 5.56	0.188 – 0.219	4.78 – 5.56	0.900	22.86
0.220 – 0.250	5.59 – 6.35	0.220 – 0.250	5.59 – 6.35	1.00	25.4
0.251 – 0.310	6.38 – 7.87	0.251 – 0.310	6.38 – 7.87	1.25	31.8
–	–	0.311 – 0.375	7.90 – 9.52	1.50	38.1
–	–	0.376 – 0.435	9.55 – 11.05	1.75	44.4
–	–	0.436 – 0.500	11.07 – 12.70	2.00	50.8

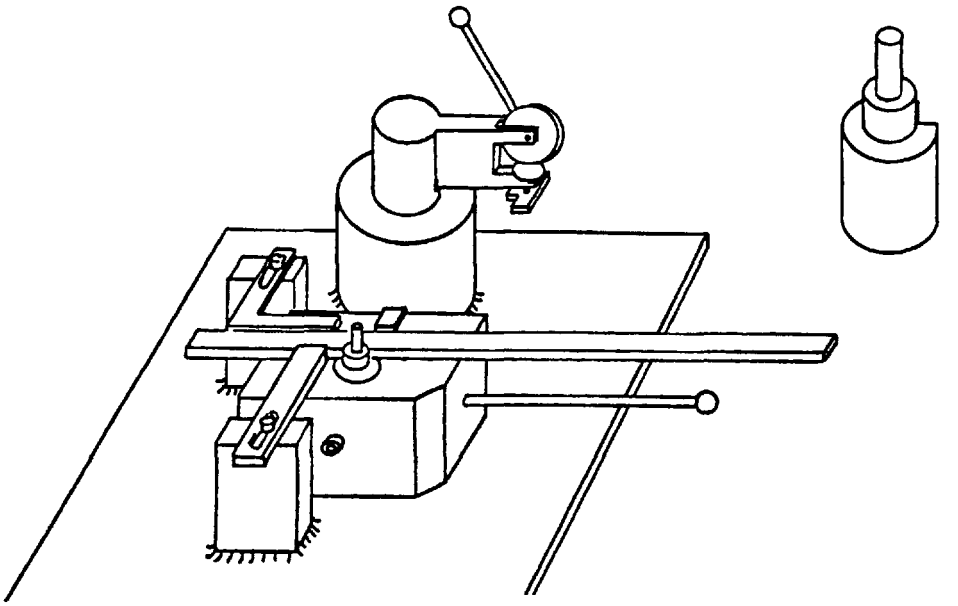

Figure 3-5
MACHINE FOR BEND

Copyright National Electrical Manufacturers Association
Provided by IHS under license with NEMA
No reproduction or networking permitted without license from IHS
Not for Resale

A 60/40 tin-lead solder conforming to ASTM B-32, Grade B shall be used for all tests. Any dross which forms must be removed from the surface of the solder before each test.

The specimen prepared for test shall be immersed vertically to a depth of 1¼ inches (32 mm) at the center of the solder pot for the time equal to or less than indicated in Part 2. After removal from the pot, the lower ½ inch (13 mm) of the segment immersed in the pot shall be examined under 6X to 10X magnification.

3.12.1.1.2 SIZES 37 THROUGH 56 AWG

A specimen of wire shall be supported by means of a fixture as shown in Figure 3-5a. The specimen and fixture so prepared shall be tested in accordance with 3.12.1.1.1. Visual examination of the lower ½ inch (13 mm) of the vertical portions of the specimen shall be made under 15X magnification.

3.12.1.1.3 RETEST CLAUSE

In the event the solder time as tested above does not meet the requirements of Part 2, a new specimen shall be dipped in a suitable rosin-alcohol flux (10 parts of Grade WW water white rosin mixed with 90 parts of denatured ethyl alcohol by weight) prior to immersion into the molten solder.

3.12.1.1.4 ADEQUATE VENTILATION

During solderability testing a hazard exists in the form of volatilized tin or lead, and some decomposition by-products of the various solderable insulations. Adequate ventilation or forced exhausting of solder pot vapors, or both, is strongly advised to protect personnel conducting the tests. (This paragraph is classified as Authorized Engineering Information.)

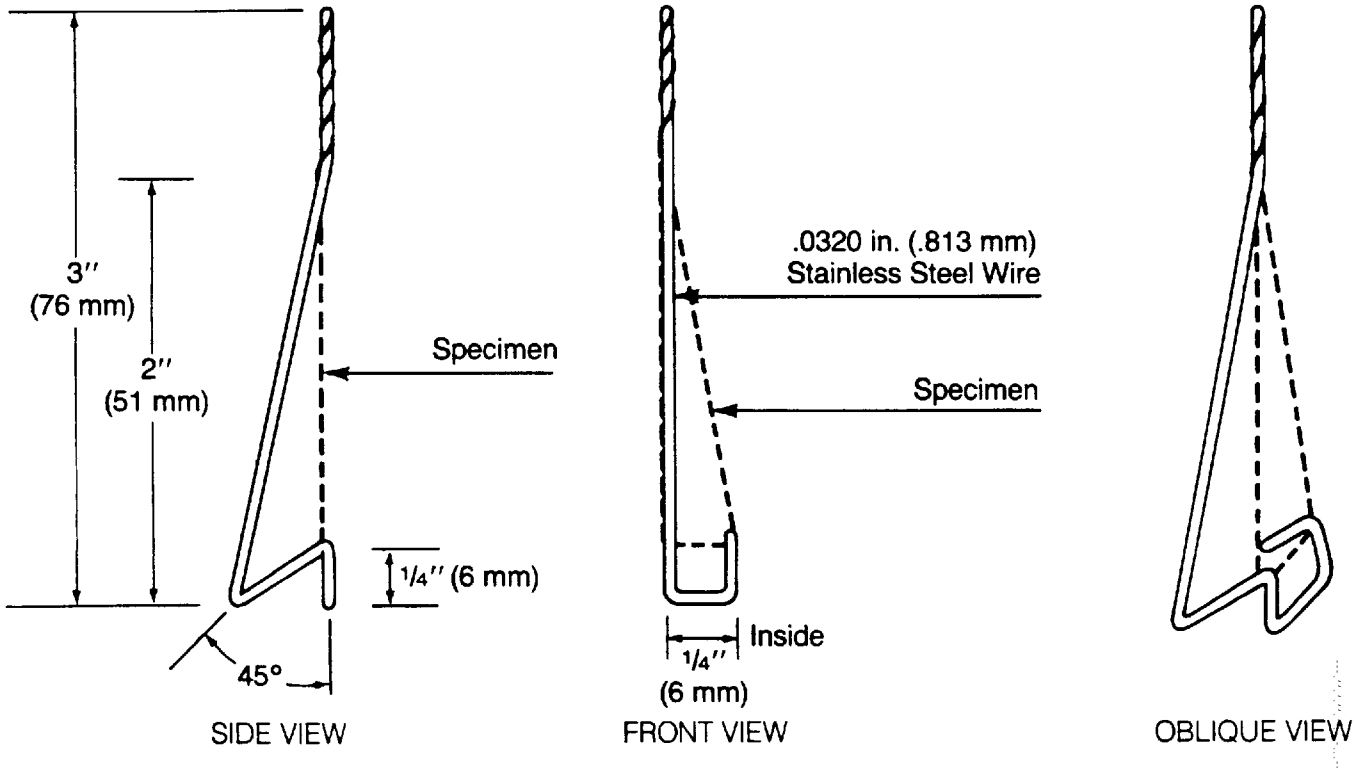

Figure 3-5a
SOLDERABILITY TEST SPECIMEN HOLDER FOR 37 THROUGH 56 AWG

Copyright National Electrical Manufacturers Association
Provided by IHS under license with NEMA
No reproduction or networking permitted without license from IHS
Not for Resale

PERIODIC CONFORMANCE TESTS

3.50 THERMOPLASTIC FLOW

3.50.1 Round Wire

3.50.1.1 FILM COATED

3.50.1.1.1 APPARATUS

The thermoplastic flow tester shall be capable of exerting a constant load perpendicular to, and directly over, the right-angle crossover of the specimen. The tester shall include a control thermocouple of suitable temperature range and a pyrometer to indicate the temperature measured by the control thermocouple. The actual specimen temperature at each test position under the load at the crossover position shall be measured throughout the expected temperature range by a calibrated thermocouple-pyrometer and compared to the control or indicated temperature. The resulting temperature differences shall be used to appropriately correct the indicated thermoplastic flow temperature. The testing chamber shall be of suitable size to maintain a temperature rise at a rate of 10 °C (18 °F) to 45 °C (81 °F) per minute to not less than 50 °C (90 °F) below the temperature specified in Part 2 and 5 °C (9 °F) per minute temperature rise from that point to failure. The failure detector shall be so constructed that a current flow of 20 ± 10 milliamperes at 155 volts 60 hertz between the crossed wires of the specimen will indicate failure.

3.50.1.1.2 PROCEDURE

The specimen shall consist of two lengths of wire positioned at right angles to each other in the apparatus. The specimen shall be carefully loaded with 2000 grams (19.6N) for 18 AWG or 250 grams (2.45N) for 36 AWG wire. The temperature shall be increased at 10° (18 °F) to 45 °C (81 °F) per minute until 55 ± 5 °C (99 ± 9 °F) below the thermoplastic flow temperature specified in Part 2 is attained and then raised 5 ± 1 °C (9 ± 2 °F) per minute until failure of the specimen occurs. The indicated temperature, corrected in accordance with 3.50.1.1.1, shall be taken as the thermoplastic flow temperature of that specimen. For 18 AWG wire, five specimens shall be tested per sample, and the median (the third highest value) shall be the thermoplastic flow temperature. For 36 AWG wire, nine specimens shall be tested per sample, and the median (the fifth highest value) shall be the thermoplastic flow temperature.

3.50.2 Rectangular Wire

3.50.2.1 FILM COATED

Heavy film coated 18 AWG round wire shall be tested in accordance with 3.50.1 to provide a periodic conformance value for rectangular wire.

3.51 SOLUBILITY

3.51.1 Round Wire

3.51.1.1 FILM COATED

3.51.1.1.1 PREPARATION OF SPECIMENS—SIZES 18 AND 36 AWG

Specimens of unstretched and unbent film coated wire, each 12 inches (300 mm) long, which have been stress annealed for 10 minutes at 150 ± 3 °C (302 ± 5 °F) shall be immersed for at least 6 inches (150 mm), without bending, for 30 minutes in the liquids specified in Part 2 and maintained at 60 ± 2 °C (140 ± 4 °F). Each specimen shall be immersed in one liquid only.

3.51.1.1.2 NEEDLE SCRAPE—SIZE 18 AWG

The specimens shall then be removed from the solvent and tested within 2 minutes, but not less than 1 minute, on a device which scrapes the surface of the film coating at right angles to the length of the wire with a 0.016 inch (0.406 mm) diameter steel needle loaded with 580 grams (5.7N) when testing copper wire and 340 grams (3.33N) when testing aluminum wire. (See Figure 3-6). The specimens shall be wiped with a clean cloth or tissue to remove any liquid and shall be straightened by hand, without stretching, to remove kinks. After the wire is inserted in the test apparatus, the weighted needle shall be lowered gently to the surface of the film coating and the wire scraped at 2 inches (50 mm) per second along the portion that was immersed. Exposure of the bare conductor shall be indicated by an electrical circuit having a potential of 7.5 ± 1.5 volts between the needle and the conductor.

3.51.1.1.3 CHEESECLOTH WIPE—SIZE 36 AWG

The specimens shall then be removed from the solvent and, within 2 minutes but not less than 1 minute, drawn once between the folds of four thicknesses of cheesecloth pressed firmly between the forefinger and the ball of the thumb. Any removal of the coating caused by kinks or mechanical injury shall not be considered as failure to meet the requirements of Part 2.

3.51.2 Rectangular Wire

3.51.2.1 FILM COATED

Specimens of unstretched and unbent film coated wire, each 12 inches (300 mm) long, which have been stress annealed at 150± 3 °C (302 ± 5 °F) shall be immersed at least 6 inches (150 mm), without bending, for 30 minutes in the liquids specified in Part 2 and maintained at 60 ± 2 °C, (140 ± 4 °F). Each specimen shall be immersed in one liquid only. The specimens shall then be tested in accordance with 3.51.1.1.3.

Copyright National Electrical Manufacturers Association
Provided by IHS under license with NEMA
No reproduction or networking permitted without license from IHS
Not for Resale

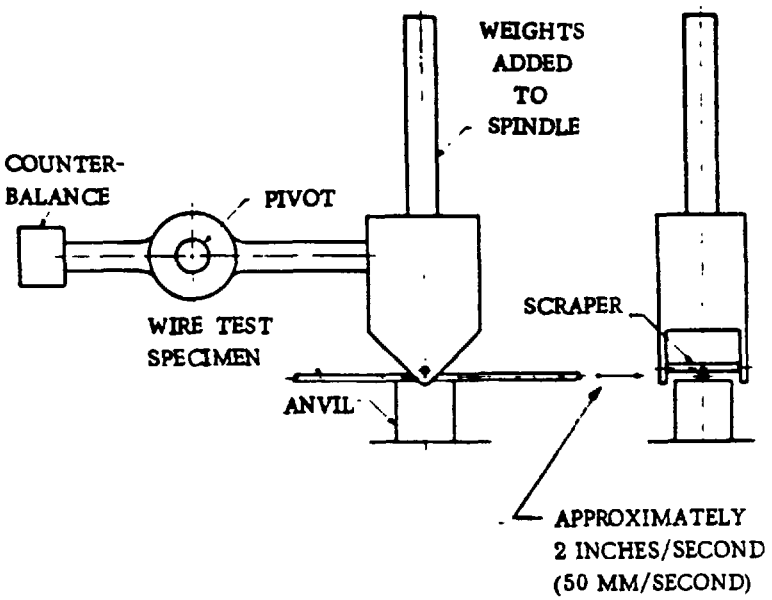

Figure 3-6
MACHINE FOR SOLUBILITY SCRAPE

3.52 DIELECTRIC STRENGTH AT RATED TEMPERATURE

3.52.1 Round Wire

3.52.1.1 Film Coated

3.52.1.1.1 Preparation of Specimens

Five specimens of 18 and/or 36 AWG heavy film coated wire shall be prepared in accordance with 3.7.1.1.2.

3.52.1.1.2 Test Procedure

The temperature of a circulating air oven shall be raised to the temperature equivalent to the thermal class rating (see Part 2) of the specimen ± 2 °C (4 °F). Each of five specimens shall be placed in a suitable holder or holders, and they shall then be placed in the oven and connected to high-voltage feed-through connectors.

Fifteen minutes, but not more than 30 minutes, after the oven again reaches the temperature equivalent to the thermal class rating of the specimen ± 2 °C (4 °F), a source of 60-hertz voltage as described in 3.7.1.1.3 shall be applied to the specimen through the feed-through connector at the oven. The voltage rise and the breakdown voltage shall be measured in accordance with 3.7.1.1.3 and the five results averaged.

3.52.2 Rectangular Wire

3.52.2.1 Film Coated

Heavy film coated 18 AWG round wire shall be tested in accordance with 3.52.1 to provide a periodic conformance value for rectangular wire.

3.53 (RESERVED)

3.54 TRANSFORMER OIL RESISTANCE

3.54.1 Round Wire

3.54.1.1 Film Coated (For Oil Filled Transformer Applications Only)—Sizes 15 through 20 AWG

A specimen of film coated wire 8 inches (200 mm) long shall be wound six turns on an 0.4 inch- (10 mm-) diameter mandrel and then annealed for 10 minutes at 150 ± 3 °C (302 ± 5 °F). The wound specimen shall then be removed from the mandrel and placed in a sealed container for 168 hours at 150 ± 3 °C (302 ± 5 °F). The specimen shall then be removed from the container and examined with normal vision.

The sealed container shall also contain 10 milliliters of transformer oil free from any additives; 0.1 gram of 0.01 inch (0.25 mm) electrical-grade kraft paper free of additives; a strip of electrical-grade steel approximately 2 inches (50 mm) long and ¼ inch (6 mm) wide; and one drop of water.

Copyright National Electrical Manufacturers Association
Provided by IHS under license with NEMA
No reproduction or networking permitted without license from IHS
Not for Resale

3.54.2 Rectangular Wire

3.54.2.1 FILM COATED

Rectangular wire shall be tested in accordance with 3.54.1 except that the specimen shall be 3 inches (75 mm) long.

3.55 REFRIGERANT 22 EXTRACTION

3.55.1 Rectangular Wire

3.55.1.1 FILM COATED

3.55.1.1.1 PREPARATION OF SPECIMENS

Eight specimens of 18 AWG heavy film-coated wire, each containing 0.6 ± 0.1 gram of insulation, shall be made into coils of seventy turns. The coils shall be annealed in a forced draft oven at 150 ± 3 °C (302 ± 5 °F) for 15 minutes, cooled to room temperature, thoroughly washed in distilled trichlorotrifluoroethane (oil-free R-113), and dried in a forced draft oven at 150 ± 3 °C (302 ± 5 °F) for 15 minutes. After cooling for 30 minutes, the eight coils shall be weighed together to the nearest 0.0001 gram. The combined weight of the eight specimens shall be the "total initial weight."

3.55.1.1.2 ENVIRONMENTAL CONDITIONING

The eight specimens shall be placed in a 450-milliliter modified Wiley siphon cup (see Figure 3-7) and suspended from the condenser coil (see Figure 3-8) in the top portion of a 2000-milliliter pressure vessel (similar to Parr autoclave #4632 pressure capacity 3000 psi or the equivalent) (20.7 MPa) 1 ± ¼ inch (25 ± 6 mm) below the condenser. The pressure vessel shall be assembled and charged with 700 ± 25 grams of monochlorodifluoromethane (Refrigerant 22).[1] The pressure vessel shall be placed in a controlled heating system, and the condenser water supply and drain line properly connected.[2] The temperature of the controlled heating system and the water flow running through the condenser shall be adjusted to maintain a reflux rate of 20 to 25 cup discharges per hour for six hours. [A pressure control range of 500 to 580 psig (3.4 to 4.0 MPa) has been experienced with R-22.] The autoclave pressure shall be kept at least 60 psig (0.4 MPa) below the critical pressure of R-22 (722 psi absolute) (4.98 MPa). After completion of the extraction, the pressure vessel shall be removed from the heating source and cooled with solid carbon dioxide (dry ice) to liquify the refrigerant.

[1]Prior to use, the "over-pressure" control switch shall be checked to ensure it is properly functioning.

[2]It is recommended that the heating systems be equipped with a device designed to deactivate the system when the pressure inside the pressure vessel reaches a prescribed value.

Also, for additional protection, a device designed to deactivate the heating system when the water flow through the condensor coil is interrupted deserves consideration. (This footnote is classified as Authorized Engineering Information.)

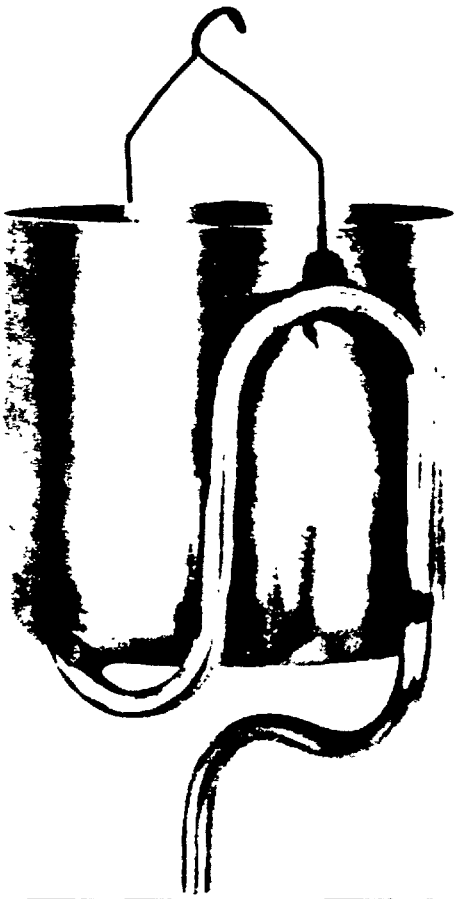

	mm	inches (Approximate)
Height of cup	82	3.23
Diameter of cup	84	3.31
Diameter of tubing	5	0.20

Figure 3-7
REFRIGERANT EXTRACTABLES TEST SIPHON CUP

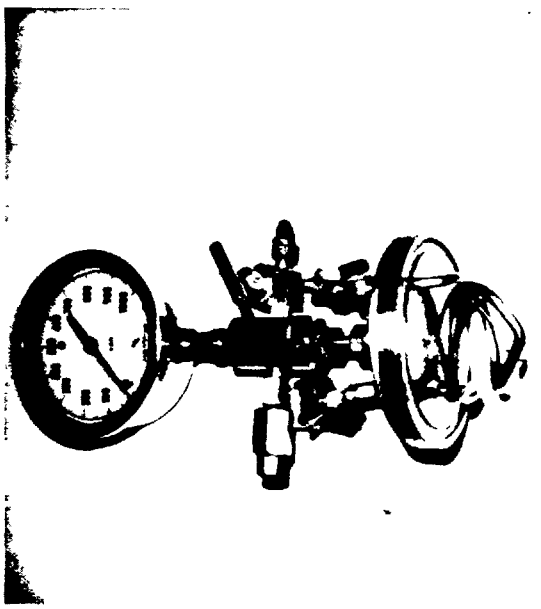

Figure 3-8
CONDENSER COILS

Copyright National Electrical Manufacturers Association
Provided by IHS under license with NEMA
No reproduction or networking permitted without license from IHS
Not for Resale

9009279 0001729 098

3.55.1.1.3 COLLECTING RESIDUE

The pressure vessel shall be discharged carefully and opened. The coils and siphon cup shall be rinsed with distilled trichlorotrifluoroethane (oil-free R-113), and the rinse shall be poured into the pressure vessel. The refrigerant shall be evaporated slowly to within approximately ¼ inch (6 mm) of the bottom of the vessel. The walls of the pressure vessel shall be washed with two successive rinses of 100 milliliters each of methylene chloride. The solvents shall be evaporated under a hood or in a well ventilated area to within ¼ inch (6 mm) of the bottom of the vessel. The liquid sample shall then be transferred to a predried, tared aluminum weighing dish, using a rinse consisting of 15 milliliters of methylene chloride. The liquid shall then be evaporated to dryness at 150 ± 3° (302 ± 5°F) for 1 hour, and then cooled to room temperature in a desiccator.

3.55.1.1.4 DETERMINATIONS OF RESULTS

The aluminum dish, with the residue, shall be weighed to the nearest 0.0001 gram. The initial tared weight of the aluminum dish shall be subtracted. The difference is the "total residue weight" of the original coils.

The insulation shall be removed from the original coils by a suitable chemical means that will not damage the conductor, and the bare conductors dried for 15 ± 2 minutes at 150 ± 3°C (302 ± 5°F). The conductors shall be cooled to room temperature in a desiccator and weighed immediately to the nearest 0.0001 gram. The sum of the weights of the coils is the "total conductor weight."

The percent extractables shall be calculated as follows:

$$\text{Percent Extractables} = \frac{\text{Total residue weight}}{\text{Total initial weight} - \text{Total conductor weight}} \times 100$$

3.56 RETAINED DIELECTRIC AFTER REFRIGERANT 22 CONDITIONING

3.56.1 Round Wire

3.56.1.1 FILM COATED

Five twisted pairs of 18 AWG heavy film-coated wire shall be prepared in accordance with 3.7.1.1.2 and conditioned in a forced draft oven at 150 ± 3°C (302 ± 5°F) for 4 hours.

The conditioned specimens shall be loaded in a pressure vessel (Parr autoclave #4632, or the equivalent) having a 2000-milliliter capacity, an inside diameter of approximately 4 inches (100 mm), and a pressure capacity of at least 3000 psig (20.7 MPa).[1] The loaded pressure vessel shall be sealed, weighed, and evacuated to 200 ± 20 mm (30 ± 3 Pa) of mercury.

The pressure vessel shall then be filled with 1.4 kilograms ± 50 grams of monochlorodifluoromethane (Refrigerant 22). The loaded pressure vessel shall be heated[2] to obtain a pressure gage reading of 600 ± 50 psig (4.20 ± 0.35 MPa). The pressure shall be maintained for 72 ± 1 hours, after which time the pressure vessel shall be removed from the heat source and the refrigerants carefully released. When the vessel pressure reaches 10 psig (0.07 MPa), the cover shall be removed and the twisted pairs transferred within 60 seconds to a forced draft oven at 150 ± 3°C (302 ± 5°F). The specimens shall remain in the oven for 10 ± 1 minutes.

After the specimens have been removed from the oven and cooled to room temperature, the dielectric strength of the twisted pairs shall be measured in accordance with 3.7.1.1.3. The five readings shall be recorded and averaged.

3.57 BOND

3.57.1 Round Wire

3.57.1.1 FILM COATED

3.57.1.1.1 PREPARATION OF SPECIMENS

1. *Sizes 18 and 26 AWG*

   The appropriate mandrel shall be selected from Table 3-11 and sprayed with a suitable release agent. (A fluorocarbon spray, or silicone spray, have been found to be satisfactory.) (This sentence is classified as Authorized Engineering Information.) The wire shall be dereeled over the end of the spool as a 3-inch single-layer coil is wound onto the prepared mandrel, using a winding tension not to exceed that shown in Table 3-11. The coil and mandrel shall be vertically mounted in a suitable holder with the free end of the coil at the top. The specified bonding weight from Table 3-11 shall be placed on the vertically mounted coil, providing a downward force during bonding. Three coils shall be prepared.

2. *Size 36 AWG*

   The appropriate mandrel shall be selected from Table 3-11 and sprayed with a suitable release agent (see 3.57.1.1.1, item 1). The wire shall be dereeled over the end of the spool as a coil of fifty continuous turns are wound onto the prepared mandrel. The coils and mandrels shall be vertically mounted in a suitable holder. The specified bonding weight from Table 3-11 shall be placed on the vertically mounted coils as described in 3.57.1.1.1, item 1. Three coils shall be prepared.

[1] Prior to use, the "over-pressure" control switch shall be checked to ensure it is properly functioning

[2] the heating system be equipped with a device designed to deactivate the system when the pressure inside the pressure vessel for additional protection, a device designed to deactivate the heating system when the water flow through the condenser coil is interrupted

Copyright National Electrical Manufacturers Association
Provided by IHS under license with NEMA
No reproduction or networking permitted without license from IHS
Not for Resale

Table 3-11
TEST PARAMETERS

AWG	Mandrel Size†		Maximum Winding Tensions		Bonding Weight†		Test Weight† After Heat Bonding		Test Weight† After Solvent Bonding	
	inches	mm	grams	newtons	grams	newtons	kilograms	newtons	kilograms	newtons
18	0.250	6.35	1220	12.0	408.0	4.00	9.0	88.3	4.5	44.1
26	0.157	3.99	200	2.0	76.0	0.75	1.6	15.7	0.80	7.85
36	0.039	0.99	12.2	0.12	15.25	0.15	0.025	0.25	0.0122	0.12

†Tolerance limits ±2%

3.57.1.1.2 HEAT AND SOLVENT BONDING

1. *Heat Bonding—Sizes 18, 26, and 36 AWG*

   The holder assembly shall be placed in a forced air oven for 1 hour at 150 ± 3°C (302 ± 5°F). The assembly shall be removed from the oven and cooled to room temperature.

   The coils shall be removed from the mandrels, inspected for breaks or physical damage, and tested in accordance with 3.57.1.1.3.

2. *Solvent Bonding—Sizes 18, 26, and 36 AWG*

   The specimen shall be dipped into the specified solvent for approximately 5 seconds. The bonded coil shall be immediately placed in the holder with the specified bonding weight from Table 3-11 and allowed to dry for 1 hour at room temperature.

   The coils shall be removed from the mandrels, dried for 15 minutes at 100 ± 3°C (212 ± 5°F), inspected for breaks or physical damage, and tested in accordance with 3.57.1.1.3.

3.57.1.1.3 BOND TEST PROCEDURE

1. *Sizes 18 and 26 AWG*

   Each 3-inch test coil shall be placed in a test fixture identical to that shown in Figure 3-9 with regard to all dimensions and radii shown. The appropriate test weight, as shown in Table 3-11 shall be the total load to be applied to the center of the coil, which includes the knife edge, support. and added weight. The load shall be lowered gently and allowed to hang for 5 seconds.

   A stress-strain analyzer shall be permitted to be used instead to apply an increasing load. The crosshead speed shall be between 0.5 and 1 inch (12 mm and 25 mm) per minute. Separation of the first or last turn shall be disregarded.

2. *Size 36 AWG*

   Each coil shall be hung by one of its ends and loaded with the weight indicated in Table 3-11. When attaching the load, any additional shock must be avoided. The weight shall be allowed to hang for 5 seconds. Separation of the first or last turn shall be disregarded.

3.58 THERMAL ENDURANCE

3.58.1 Round Wire

3.58.1.1 FILM COATED

3.58.1.1.1 SPECIMENS

Thermal class ratings shall be based upon tests performed on unvarnished specimens of 18 AWG round wire with a heavy film coating, prepared and tested in accordance with ASTM D2307.

Wire size 28 AWG shall be permitted to be used as a substitute for 18 AWG where the specification's size range is limited to 25 AWG and finer.

3.58.1.1.2 "END POINTS"

The "end point" chosen for purposes of this publication is 20,000 hours. This means that the graph of the test data which is obtained when following the test procedure given in ASTM D 2307 must show an extrapolated life for the wire of 20,000 hours or more at or above the thermal class rating.

The philosophy established in ANSI/IEEE Std 1 was followed in setting the 20,000 hour end point.

The tested life of the specimen being evaluated shall be not less than 5000 hours at 20°C above the thermal class rating.

3.58.1.2 FIBROUS COVERED

The thermal class of fibrous covered wire shall be based on experience.

The Institute of Electrical and Electronics Engineers has not established test procedures for the thermal evaluation of fibrous covered magnet wire. However, ANSI/IEEE Std 1 points out that the thermal rating of insulation can be established either by experience or by accepted tests.

For example, glass fiber insulation has, by experience, become established as a component in both Class 130 and 155 insulation systems.

Glass fiber silicone treated insulation has, by experience

Copyright National Electrical Manufacturers Association
Provided by IHS under license with NEMA
No reproduction or networking permitted without license from IHS
Not for Resale

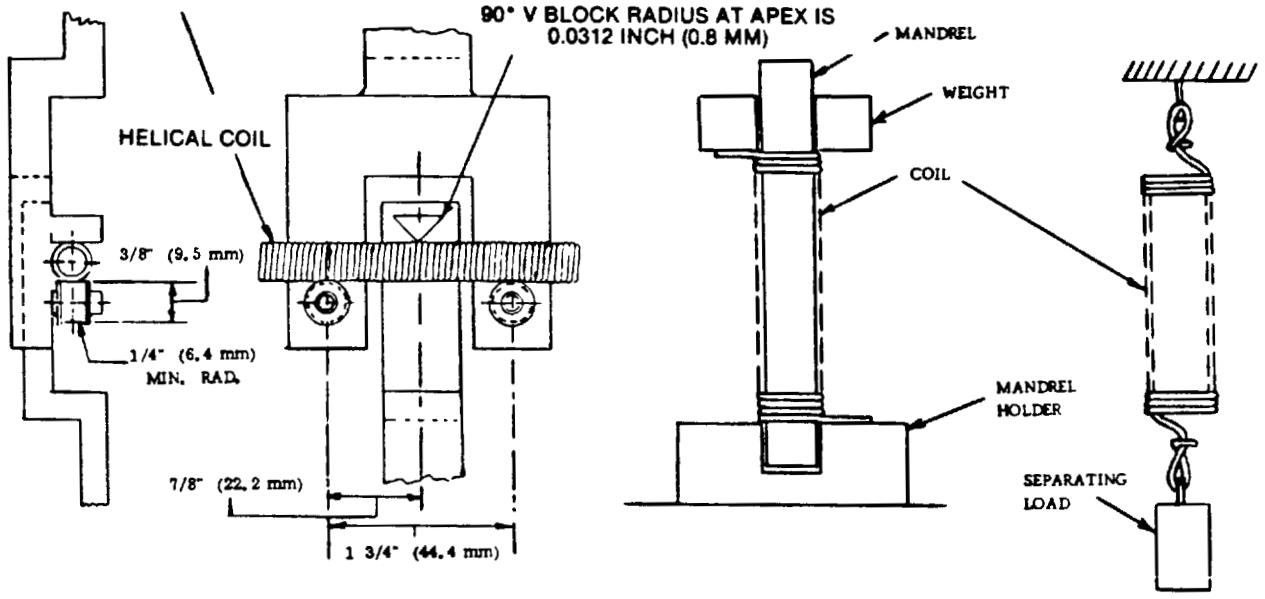

Figure 3-9
TEST FIXTURES FOR BOND STRENGTH TEST

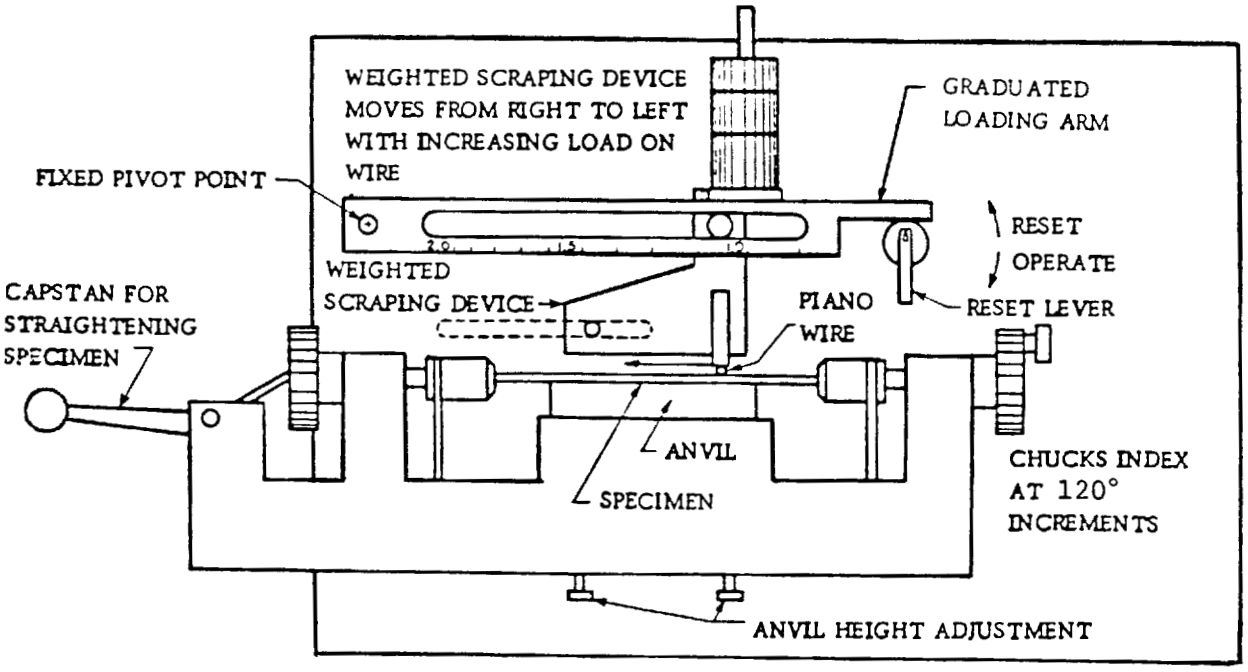

Figure 3-10
MACHINE FOR UNIDIRECTIONAL SCRAPE

Copyright National Electrical Manufacturers Association
Provided by IHS under license with NEMA
No reproduction or networking permitted without license from IHS
Not for Resale

become established as a component in Class 200 insulation systems.

Polyester-glass-fiber insulation is more than 50 percent inorganic material and has, by experience, become established as a component in Class 155 insulation systems and in Class 200 when silicone tested.

Glass fiber and polyester-glass-fiber insulations, when treated with a high-temperature, non-silicone organic varnish have, by experience, become established as components in Class 180 insulation systems. (The preceding five paragraphs are classified as Authorized Engineering Information.)

The high-temperature organic varnish must also meet the requirements of 3.58.1.1.2 as a film-coated magnet wire or have an extrapolated life of 20,000 hours at 180°C when following the procedures given in ASTM D1932.

3.58.2 Rectangular Wire

3.58.2.1 Film Coated

The thermal class rating shall be based upon tests performed on unvarnished specimens of 18 AWG round wire with a heavy film coating in accordance with 3.58.1.1.

3.58.2.2 Fibrous Covered

The thermal class of fibrous covered wire shall be based on experience.

The Institute of Electrical and Electronics Engineers has not established test procedures for the thermal evaluation of fibrous covered magnet wire. However, ANSI/IEEE Std 1 points out that the thermal rating of insulation can be established either by experience or by accepted tests.

For example, glass fiber insulation has, by experience, become established as a component in both Class 130 and Class 155 insulation systems.

Glass fiber silicone treated insulation has, by experience, become established as a component in Class 200 insulation systems.

Polyester-glass-fiber insulation is more than 50 percent inorganic material and has, by experience, become established as a component in Class 155 insulation systems and in Class 200 when silicone tested.

Glass fiber and polyester-glass-fiber insulations, when treated with a high-temperature, non-silicone organic varnish have, by experience, become established as components in Class 180 insulation systems. (The preceding five paragraphs are classified as Authorized Engineering Information.)

The high-temperature organic varnish must also meet the requirements of 3.58.1.1.2 as a film-coated magnet wire or have an extrapolated life of 20,000 hours at 180°C when following the procedures given in ASTM D 1932.

3.59 SCRAPE RESISTANCE

3.59.1 Round Wire

3.59.1.1 Film Coated (Sizes 10 through 30 AWG)

Scrape resistance shall be measured as follows on a machine such as that shown in Figure 3-10.

3.59.1.1.1 Machine

The machine shall provide a scraping action in one direction only along the longitudinal axis of the film coated wire to be tested, at a rate of 16 inches (400 mm) ± 10 percent per minute.

The weighted scraping device shall contain a polished 0.009 inch- (0.23 mm-) diameter steel piano wire or needle located between two jaws which support the steel piano wire or needle rigidly, without sagging or curvature, at right angles to the direction of stroke.

The machine shall automatically apply an increasing scraping force by the movement of the scraping device along a pivoted loading arm whose lower edge is graduated to provide a multiplying factor.

The machine shall be equipped with two adjustable clamping jaws which can be indexed at each 120° position to rotate the specimen and with a supporting anvil which can be suitably adjusted to support the specimen.

The machine shall be equipped with an electrical circuit which limits the current to 20.0 milliamperes at 7.5 ± 1.5 volts between the conductor and the piano wire or needle scraper. The circuit shall be so designed that failure of the film coating is detected and the machine stopped when the film coating is removed and the bare conductor exposed for approximately $^1/_8$ inch (3 mm).

3.59.1.1.2 Test Procedure

A specimen of film coated wire shall be wiped with a clean cloth or tissue, placed in the machine, and straightened by elongating it not more than 1 percent to remove kinks. The specimen shall then be secured in the the clamping jaws, and the supporting anvil adjusted to contact the underside of the specimen.

An initial load of approximately 90 percent of the minimum "grams-to-fail" value specified in Part 2 shall be applied to the loading arm. This initial device shall be lowered gently onto the surface of the film coating and the scraping action started. The scraping action will continue until the conductor is exposed and the machine stops.

The multiplying factor at which the machine shuts off shall be read from the scale on the loading arm. The product of this factor and the initial load applied shall be recorded as the "grams-to-fail" value.

The test procedure shall be repeated twice, indexing the clamps holding the wire to expose the wire surface 120° and 240° from the original position, and the same information recorded. The three "grams-to-fail" values shall then be averaged.

Copyright National Electrical Manufacturers Association
Provided by IHS under license with NEMA
No reproduction or networking permitted without license from IHS
Not for Resale

9009279 0001733 519

Appendix A
REFERENCE TEST CONDITIONS AND PROCEDURES FOR FILM-COATED MAGNET WIRE

Title of Test	(ASTM D1676-80) Paragraph Film Coated	(ASTM D2307-78) Paragraph Film Coated	(ASTM D3353-74) Paragraph Fibrous Covered	NEMA Pub. No. MW 1000 Paragraph			
				Round		Rectangular	
				Film Coated	Fibrous Covered	Film Coated	Fibrous Covered
Dimensions	75–81	...	7.1-7.6	3.1.1.1	3.1.1.2	3.1.2.1	3.1.2.2
Adherence and flexibility	3–9	...	8.1-8.5	3.2.1.1	3.2.1.2	3.2.2.1	3.2.2.2
Elongation	44–50	...	4.1-4.6	3.3.1.1	3.3.1.2	3.3.2.1	3.3.2.2
Heat shock	29–36	...	...	3.4.1.1	...	3.4.2.1	...
Springback	10–15	...	...	3.6.1.1	...	...	...
Dielectric strength	50–56	...	9.1-9.6	3.7.1.1	3.7.1.2	3.7.2.1	3.7.2.2
Continuity	22–28	...	...	3.8.1.1	...	...	...
High-voltage continuity	119–125	...	...	3.8.1.1.1	...	...	...
Completeness of cure	89–94	...	...	3.9.1.1	...	3.9.2.1	...
Solderability	62–69	...	...	3.12.1.1	...	...	...
Thermoplastic flow	81–88	...	...	3.50.1.1	...	...	...
Solubility	57–61	...	...	3.51.1.1	...	3.51.2.1	...
Dielectric strength at rated temperature	95–100	...	...	3.52.1.1	...	3.52.2.1	...
Refrigerant extraction	101–110	...	...	3.55.1.1	...	...	...
Retained dielectric after Refrigerant 22 conditioning	111–118	...	...	3.56.1.1	...	...	...
Thermal endurance	—	1-12	...	3.58.1.1	3.58.1.2	3.58.2.1	3.58.2.2
Unidirectional scrape resistance	37–43	...	...	3.59.1.1	...	...	...

Copyright National Electrical Manufacturers Association
Provided by IHS under license with NEMA
No reproduction or networking permitted without license from IHS
Not for Resale

9009279 0001734 455

NEMA STANDARDIZATION

The purpose of NEMA Standards, their classification and status are set forth in certain clauses of the NEMA Bylaws, which are quoted below:

Purpose of Standards

National Electrical Manufacturers Association Standards are adopted in the public interest and are designed to eliminate misunderstandings between the manufacturer and the purchaser and to assist the purchaser in selecting and obtaining the proper product for its particular need. Existence of a National Electrical Manufacturers Association Standard does not in any respect preclude any member or nonmember from manufacturing or selling products not conforming to the standard.

(Bylaw—Art. V, Sec. 1)

Definition of a Standard

A standard of the National Electrical Manufacturers Association defines a product, process or procedure with reference to one or more of the following: nomenclature, composition, construction, dimensions, tolerances, safety, operating characteristics, performance, rating, testing, and the service for which they are designed.

(Bylaw—Art. V, Sec. 2, Subsection A)

Dimensions

Where dimensions are given for interchangeability purposes, alternate dimensions satisfying the other provisions of the standards publication may be capable of otherwise equivalent performance.

(NEMA Policy Memorandum 84-2, dated June 7, 1984)

Classes of Standards

National Electrical Manufacturers Association Standards are of two classes:

1. NEMA Standard, which relates to a product commercially standardized and subject to repetitive manufacture, which standard has been approved by at least 90 percent of the members of the Subdivision eligible to vote thereon;
2. Suggested Standard for Future Design, which may not have been regularly applied to a commercial product, but which suggests a sound engineering approach to future development, which standard has been approved by at least two-thirds of the members of the Subdivision eligible to vote thereon.

(Bylaw—Art. V, Sec. 6, 1st Sentence)

Official Standards Proposal

An Official Standards Proposal is an official draft of a proposed standard which is formally recommended to an outside organization(s) for consideration, comment and/or approval.

(Bylaw—Art. V, Sec. 4, Subsection A)

Identification of Status

Standards in NEMA Standards Publications are identified in the foreword or following each standard as "NEMA Standard" or "Suggested Standard for Future Design." These indicate the status of the standard. These words are followed by a date which indicates when the standard was adopted in its present form by the Association.

The material identified as "Authorized Engineering Information" and "Official Standards Proposal" is designated similarly.

Copyright National Electrical Manufacturers Association
Provided by IHS under license with NEMA
No reproduction or networking permitted without license from IHS
Not for Resale

9009279 0001735 391

MAGNET WIRE SECTION
OF THE
NATIONAL ELECTRICAL MANUFACTURERS ASSOCIATION

MEMBER COMPANIES

Algonquin Industries, Inc.
Guilford, CT 06437

American Wire Corporation
Sandy Hook, CT 06482

Anamag
Glen Ellyn, IL 60137

Belden/Electrical Wire Products
Geneva, IL 60134

Bridgeport Insulated Wire Company, The
Bridgeport, CT 06610

Chicago Magnet Wire Corporation
Elk Grove Village, IL 60007

Elektrisola, Inc.
Penacook, NH 03301

Essex Group, Inc.
Fort Wayne, IN 46804

Hudson Viking, Inc.
Trenton, GA 30752

Phelps Dodge Magnet Wire Company
Fort Wayne, IN 46801

Rea Magnet Wire Company, Inc.
Fort Wayne, IN 46896

Southwire Specialty Products
Osceola, AR 72370

Universal Manufacturing
Gallmon, MS 39077

Westinghouse Electric Corporation
Abingdon, VA 24210

Copyright National Electrical Manufacturers Association
Provided by IHS under license with NEMA
No reproduction or networking permitted without license from IHS
Not for Resale

National Electrical Manufacturers Association
2101 L Street, N.W. Suite 300
Washington, D.C. 20037 (202) 457-8400

PROPOSED, NEW AND REVISED STANDARDS

7MW Page 51
July 13, 1990

TO ALL REPRESENTATIVES OF MEMBER COMPANIES IN THE MAGNET WIRE SECTION

Subject: Revision No. 3 to NEMA Standards Publication for *Magnet Wire*, NEMA Pub. No. MW 1000-1987.

Dear Representative:

Revision No. 3, consisting of printed pages dated MARCH 1990, is enclosed for insertion into your copy of the subject publication. Also enclosed is a title page to indicate that your book now contains Revision 3.

To bring your copy up-to-date, please insert the attached revised pages in their proper place and delete the pages they replace.

Sincerely,

Beth Anne Gidlund

Beth Anne Gidlund
Assistant Editor
NEMA

Encl: Revision No. 3 to MW 1000-1987.
Copies to: All known holders of MW 1000-1987.

Copyright National Electrical Manufacturers Association
Provided by IHS under license with NEMA
No reproduction or networking permitted without license from IHS
Not for Resale

NEMA MW*1000 87 ■ 6470247 0020615 6 ■

MW 1000
MAGNET WIRE

Revision No. 1—October 1987
Revision No. 2—March 1989
Revision No. 3—March 1990

▲ Indicates change from original publication.

ANSI Approval Date: July 14, 1989

(ANSI approval reflects only the base publication, not its revisions.)

Published by:
National Electrical Manufacturers Association
2101 L Street, N.W.
Washington, DC 20037

© 1987 by National Electrical Manufacturers Association

Copyright National Electrical Manufacturers Association
Provided by IHS under license with NEMA
No reproduction or networking permitted without license from IHS
Not for Resale

NEMA MW*1000 87 ■ 6470247 0020616 8 ■

Table 1-6
INCH AND METRIC EQUIVALENT DIMENSIONS FOR MAGNET WIRE
TYPE 3 SELF-BONDING WIRE, 16 TO 30 AWG

AWG Size	Bare Wire Diameter						Minimum Increase in Diameter				Maximum Overall Diameter		AWG Size
	Minimum		Nominal		Maximum		Film Coating		Thermoplastic Coating				
	inches	mm	inches	mm	inches	mm	inches	mm	inches	mm	inches	mm	
16	0.0503	1.278	0.0508	1.290	0.0511*	1.298*	0.0043	0.109	0.0006	0.015	0.0577	1.466	16
17	0.0448	1.138	0.0453	1.151	0.0455*	1.156*	0.0041	0.104	0.0006	0.015	0.0520	1.321	17
18	0.0399	1.013	0.0403	1.024	0.0405*	1.029*	0.0039	0.099	0.0006	0.015	0.0468	1.189	18
19	0.0355	0.902	0.0359	0.912	0.0361*	0.917*	0.0037	0.094	0.0006	0.015	0.0422	1.072	19
20	0.0317	0.805	0.0320	0.813	0.0322*	0.818*	0.0035	0.089	0.0005	0.013	0.0379	0.903	20
21	0.0282	0.716	0.0285	0.724	0.0286*	0.726*	0.0033	0.084	0.0005	0.013	0.0342	0.869	21
22	0.0250	0.635	0.0253	0.643	0.0254*	0.645	0.0032	0.081	0.0005	0.013	0.0308	0.782	22
23	0.0224	0.569	0.0226	0.574	0.0227*	0.577*	0.0030	0.076	0.0005	0.013	0.0279	0.709	23
24	0.0199	0.505	0.0201	0.511	0.0202*	0.513*	0.0029	0.074	0.0005	0.013	0.0252	0.640	24
25	0.0177	0.450	0.0179	0.455	0.0180*	0.457*	0.0027	0.069	0.0005	0.013	0.0228	0.579	25
26	0.0157	0.399	0.0159	0.404	0.0160*	0.406*	0.0026	0.066	0.0005	0.013	0.0206	0.523	26
27	0.0141	0.358	0.0142	0.361	0.0143	0.363	0.0024	0.061	0.0005	0.013	0.0185	0.470	27
28	0.0125	0.318	0.0126	0.320	0.0127	0.323	0.0023	0.058	0.0005	0.013	0.0166	0.422	28
29	0.0112	0.284	0.0113	0.287	0.0114	0.290	0.0022	0.056	0.0004	0.010	0.0152	0.386	29
30	0.0099	0.251	0.0100	0.254	0.0101	0.257	0.0021	0.053	0.0004	0.010	0.0137	0.348	30

*This bare wire diameter shall be permitted to be exceeded; see 1.4.9.1.

Copyright National Electrical Manufacturers Association
Provided by IHS under license with NEMA
No reproduction or networking permitted without license from IHS
Not for Resale

Copyright National Electrical Manufacturers Association
Provided by IHS under license with NEMA
No reproduction or networking permitted without license from IHS
Not for Resale

NEMA MW*1000 87 ■ 6470247 0020617 T ■

Table 1-7 ▲
INCH AND METRIC EQUIVALENT DIMENSIONS FOR MAGNET WIRE
SINGLE-GLASS-FIBER-COVERED ROUND BARE, SINGLE-FILM-COATED AND HEAVY-FILM-COATED WIRE

AWG Size	Bare Wire Diameter						Minimum Increase Single-glass-fiber Covering		Maximum Overall Diameter, Single-glass-fiber Covered						AWG Size
	Minimum		Nominal		Maximum				Bare		Single-Film		Heavy-Film		
	inches	mm	inches	mm	inches	mm	inches	mm	inches	mm	inches	mm	inches	mm	
4/0	0.4554	11.567	0.4600	11.684	0.4646	11.801	0.0045	0.114	0.4716	11.979	...	...	...	...	4/0
3/0	0.4055	10.300	0.4096	10.404	0.4137	10.508	0.0045	0.114	0.4207	10.686	...	...	...	...	3/0
2/0	0.3612	9.174	0.3648	9.266	0.3684	9.357	0.0045	0.114	0.3754	9.535	...	...	...	...	2/0
1/0	0.3217	8.171	0.3249	8.252	0.3281	8.334	0.0045	0.114	0.3351	8.512	...	...	...	...	1/0
1	0.2864	7.275	0.2893	7.348	0.2922	7.422	0.0045	0.114	0.2992	7.600	...	...	...	...	1
2	0.2550	6.477	0.2576	6.543	0.2602	6.609	0.0045	0.114	0.2672	6.787	...	...	...	...	2
3	0.2271	5.768	0.2294	5.827	0.2317	5.885	0.0045	0.114	0.2387	6.063	...	...	...	...	3
4	0.2023	5.138	0.2043	5.189	0.2053*	5.215*	0.0045	0.114	0.2133	5.418	...	...	0.2170	5.512	4
5	0.1801	4.575	0.1819	4.620	0.1828*	4.643*	0.0045	0.114	0.1907	4.844	...	...	0.2170	5.512	5
6	0.1604	4.074	0.1620	4.115	0.1628*	4.135*	0.0045	0.114	0.1706	4.333	...	...	0.1942	4.933	6
7	0.1429	3.630	0.1443	3.665	0.1450*	3.683*	0.0045	0.114	0.1527	3.879	...	...	0.1561	3.965	7
8	0.1272	3.231	0.1285	3.264	0.1292*	3.282*	0.0045	0.114	0.1368	3.475	...	...	0.1402	3.561	8
9	0.1133	2.878	0.1144	2.906	0.1150*	2.921*	0.0045	0.114	0.1225	3.112	...	...	0.1259	3.198	9
10	0.1009	2.563	0.1019	2.588	0.1024*	2.601*	0.0040	0.102	0.1089	2.766	...	...	0.1121	2.847	10
11	0.0898	2.281	0.0907	2.304	0.0912*	2.136*	0.0040	0.102	0.0976	2.479	...	...	0.1008	2.560	11
12	0.0800	2.032	0.0808	2.052	0.0812*	2.062*	0.0040	0.102	0.0876	2.225	...	...	0.0907	2.304	12
13	0.0713	1.811	0.0720	1.829	0.0724*	1.839*	0.0040	0.102	0.0787	1.999	...	...	0.0817	2.075	13
14	0.0635	1.613	0.0641	1.628	0.0644*	1.636*	0.0040	0.102	0.0707	1.796	0.0726	1.844	0.0742	1.885	14
15	0.0565	1.435	0.0571	1.450	0.0574*	1.458*	0.0040	0.102	0.0637	1.618	0.0654	1.661	0.0669	1.699	15
16	0.0503	1.278	0.0508	1.290	0.0511*	1.298*	0.0040	0.102	0.0573	1.455	0.0591	1.501	0.0605	1.537	16
17	0.0448	1.138	0.0453	1.151	0.0455*	1.156*	0.0040	0.102	0.0518	1.316	0.0535	1.359	0.0548	1.392	17
18	0.0399	1.013	0.0403	1.024	0.0405*	1.029*	0.0040	0.102	0.467	1.186	0.0484	1.229	0.0497	1.262	18
19	0.0355	0.902	0.0359	0.912	0.0361*	0.917*	0.0040	0.102	0.0423	1.074	0.0439	1.115	0.0451	1.146	19
20	0.0317	0.805	0.0320	0.813	0.0322*	0.818*	0.0040	0.102	0.383	0.973	0.0399	1.013	0.0411	1.044	20
21	0.0282	0.716	0.0285	0.724	0.0286*	0.726*	0.0040	0.102	0.0348	0.884	0.0363	0.922	0.0374	0.950	21
22	0.0250	0.635	0.0253	0.643	0.0254*	0.645*	0.0040	0.102	0.0316	0.803	0.0330	0.838	0.0341	0.866	22
23	0.0244	0.569	0.0226	0.574	0.0227*	0.577*	0.0040	0.102	0.0288	0.732	0.0303	0.770	0.0313	0.795	23
24	0.0199	0.505	0.0201	0.511	0.0202*	0.513*	0.0025	0.064	0.0243	0.617	0.0257	0.653	0.0267	0.678	24
25	0.0177	0.450	0.0179	0.455	0.0180*	0.457*	0.0025	0.064	0.0221	0.561	0.0234	0.594	0.0243	0.617	25
26	0.0157	0.399	0.0159	0.404	0.0160*	0.406*	0.0025	0.064	0.0201	0.511	0.0213	0.541	0.0222	0.564	26
27	0.0141	0.358	0.0142	0.361	0.0143	0.363	0.0025	0.064	0.0183	0.465	0.0196	0.498	0.0204	0.518	27
28	0.0125	0.318	0.0126	0.320	0.0127	0.323	0.0025	0.064	0.0167	0.424	0.0180	0.457	0.0187	0.475	28
29	0.0112	0.284	0.0113	0.287	0.0114	0.290	0.0025	0.064	0.0154	0.391	0.0166	0.422	0.0173	0.439	29
30	0.0099	0.251	0.0100	0.254	0.0101	0.257	0.0025	0.064	0.0141	0.358	0.0152	0.386	0.0159	0.404	30

*This bare wire diameter shall be permitted to be exceeded; see 1.4.9.1.
▲The dimension headings of the table have been editorially changed.

POLYURETHANE, SINGLE ENAMELLED ROUND COPPER MAGNET WIRE FOR SOLDERABLE APPLICATIONS THERMAL CLASS 155

INSULATING MATERIALS — The coating is based on polyurethane resins (1.2.2.2).

THERMAL CLASS — 155 °C when tested in accordance with Part 1, para. 1.6 and Part 3, para. 3.58.1.1.

GENERAL REQUIREMENTS — See Part 1.

Characteristics	Test Procedure, See Part 3, Paragraph	Requirements
1. DIMENSIONS	3.1.1.1	See Table S (MW 79-C)
2. ADHERENCE AND FLEXIBILITY	3.2.1.1	No cracks visible in the film coating
3. ELONGATION	3.3.1.1	Not less than value in Table S (MW 79-C)
4. HEAT SHOCK	3.4.1.1	No cracks visible in the film coating after conditioning at 175 °C
6. SPRINGBACK	3.6.1.1	Not greater than value in Table S (MW 79-C)
7. DIELECTRIC STRENGTH	3.7.1.1	Not less than value in Table S (MW 79-C)
8. CONTINUITY	3.8.1.1	The number of discontinuities shall not exceed 25 when tested in accordance with the following: 25—30 AWG para. 3.8.1.1.1 31—44 AWG para. 3.8.1.1.1 or 3.8.1.1.2 45—56 AWG para. 3.8.1.1.2
12. SOLDERABILITY	3.12.1.1	Covered with continuous film of solder after immersion as follows: ▲ 25-29 AWG 6 seconds at 390 °C 30-36 AWG 5 seconds at 390 °C 37-46 AWG 4 seconds at 390 °C 47-56 AWG 3 seconds at 360 °C

PERIODIC CONFORMANCE TESTS

50. THERMOPLASTIC FLOW	3.50.1.1	Median not less than 200 °C with heavy film coated 36 AWG
51. SOLUBILITY	3.51.1.1	A specimen of heavy film coated 36 AWG immersed in xylene shall not soften sufficiently to expose the bare conductor.
52. DIELECTRIC STRENGTH AT RATED TEMPERATURE	3.52.1.1	Average not less than 1900 volts with heavy film coated 36 AWG
59. SCRAPE RESISTANCE	3.59.1.1	Lowest "grams-to-fail" load for any one of the three tests and the average of the three tests shall be not less than value in Table S (MW 79-C)

Copyright National Electrical Manufacturers Association
Provided by IHS under license with NEMA
No reproduction or networking permitted without license from IHS
Not for Resale

POLYURETHANE, SINGLE ENAMELLED ROUND COPPER MAGNET WIRE FOR SOLDERABLE APPLICATIONS THERMAL CLASS 155

Table S (MW 79-C)

AWG Size	Bare Wire Diameter, Inches†			Insulation†		Elongation, Minimum Percent	Scrape, Grams to Fail		Springback, Maximum Degrees per Turn	Dielectric Strength, Minimum Breakdown Volts	AWG Size
	Minimum	Nominal	Maximum	Minimum Increase in Diameter, Inches	Maximum Overall Diameter, Inches		Average	Minimum			
25	0.0177	0.0179	0.0180 *	0.0009	0.0194	28	350	300	72	2625	25
26	0.0157	0.0159	0.0160 *	0.0009	0.0173	27	330	280	76	2550	26
27	0.0141	0.0142	0.0143	0.0008	0.0156	27	310	265	80	2500	27
28	0.0125	0.0126	0.0127	0.0008	0.0140	26	290	250	85	2425	28
29	0.0112	0.0113	0.0114	0.0007	0.0126	26	270	230	91	2375	29
30	0.0099	0.0100	0.0101	0.0007	0.0112	25	255	220	96	2300	30
31	0.0088	0.0089	0.0090	0.0006	0.0100	24	...	...	..	2075	31
32	0.0079	0.0080	0.0081	0.0006	0.0091	24	...	...	..	1850	32
33	0.0070	0.0071	0.0072	0.0005	0.0081	23	...	...	..	1675	33
34	0.0062	0.0063	0.0064	0.0005	0.0072	22	...	...	..	1500	34
35	0.0055	0.0056	0.0057	0.0004	0.0064	21	...	...	..	1325	35
36	0.0049	0.0050	0.0051	0.0004	0.0056	20	...	...	..	1200	36
37	0.0044	0.0045	0.0046	0.0003	0.0052	20	...	...	..	1075	37
38	0.0039	0.0040	0.0041	0.0003	0.0047	19	...	...	..	950	38
39	0.0034	0.0035	0.0036	0.0002	0.0041	18	...	...	..	850	39
40	0.0030	0.0031	0.0032	0.0002	0.0037	17	...	...	..	775	40
41	0.0027	0.0028	0.0029	0.0002	0.0033	17	...	...	..	700	41
42	0.0024	0.0025	0.0026	0.0002	0.0030	16	...	...	..	625	42
43	0.0021	0.0022	0.0023	0.0002	0.0026	15	...	...	..	550	43
44	0.0019	0.0020	0.0021	0.0001	0.0024	14	...	...	..	500	44
	Conductor Resistance at 20°C, Ohms per Foot †, ‡						Theoretical Nominal Bare Wire Diameter, Inches †, ‡				
	Minimum	Nominal	Maximum								
45	3.080	3.348	3.616	0.00010	0.00205	11	0.00176				45
46	3.870	4.207	4.544	0.00010	0.00185	10	0.00157				46
47	4.868	5.291	5.714	0.00010	0.00170	8	0.00140				47
48	6.205	6.745	7.285	0.00010	0.00150	7	0.00124				48
49	7.744	8.417	9.090	0.00010	0.00130	6	0.00111				49
50	9.734	10.58	11.43	0.00010	0.00120	5	0.00099				50
51	12.32	13.39	14.46	0.00010	0.00110	..	0.00088				51
52	15.69	17.05	18.41	0.00010	0.00100	..	0.00078				52
53	19.48	21.17	22.86	0.00005	0.00085	..	0.00070				53
54	24.82	26.98	29.14	0.00005	0.00075	..	0.00062				54
55	31.54	34.28	37.02	0.00005	0.00070	..	0.00055				55
56	39.73	43.19	46.65	0.00005	0.00065	..	0.00049				56

*This maximum bare wire diameter shall be permitted to be exceeded; see 1.4.9.1.
†For metric equivalent, see 1.5.
‡Conductor size tolerance based on resistance; see 1.4.9.2.
NOTE: For direct conversion inches to millimeters, multiply inches by the factor 25.4 (exact). (This note approved as Authorized Engineering Information 3-11-1987.)

Copyright National Electrical Manufacturers Association
Provided by IHS under license with NEMA
No reproduction or networking permitted without license from IHS

Not for Resale

POLYURETHANE, HEAVY ENAMELLED ROUND COPPER MAGNET WIRE FOR SOLDERABLE APPLICATIONS THERMAL CLASS 155

INSULATING MATERIALS — The coating is based on polyurethane resins (1.2.2.2).

THERMAL CLASS — 155°C when tested in accordance with Part 1, para. 1.6 and Part 3, para. 3.58.1.1.

GENERAL REQUIREMENTS — See Part 1.

Characteristics	Test Procedure, See Part 3, Paragraph	Requirements
1. DIMENSIONS	3.1.1.1	See Table H (MW 79-C)
2. ADHERENCE AND FLEXIBILITY	3.2.1.1	No cracks visible in the film coating
3. ELONGATION	3.3.1.1	Not less than value in Table H (MW 79-C)
4. HEAT SHOCK	3.4.1.1	No cracks visible in the film coating after conditioning at 175°C
6. SPRINGBACK	3.6.1.1	Not greater than value in Table H (MW 79-C)
7. DIELECTRIC STRENGTH	3.7.1.1	Not less than value in Table H (MW 79-C)
8. CONTINUITY	3.8.1.1	The number of discontinuities shall not exceed 7 for 25–30 AWG, 5 for 31–44 AWG, or 10 for 45–50 AWG, when tested in accordance with the following: 25–30 AWG para. 3.8.1.1.1 31–44 AWG para. 3.8.1.1.1 or 3.8.1.1.2 45–50 AWG para. 3.8.1.1.2
12. SOLDERABILITY	3.12.1.1	Covered with continuous film of solder after immersion as follows: ▲ 25–29 AWG 6 seconds at 390°C 30–36 AWG 5 seconds at 390°C 37–46 AWG 4 seconds at 390°C 47–46 AWG 3 seconds at 360°C

PERIODIC CONFORMANCE TESTS

50. THERMOPLASTIC FLOW	3.50.1.1	Median not less than 200°C with heavy film coated 36 AWG
51. SOLUBILITY	3.51.1.1	A specimen of heavy film coated 36 AWG immersed in xylene shall not soften sufficiently to expose the bare conductor.
52. DIELECTRIC STRENGTH AT RATED TEMPERATURE	3.52.1.1	Average not less than 1900 volts with heavy film coated 36 AWG
59. SCRAPE RESISTANCE	3.59.1.1	Lowest "grams-to-fail" load for any one of the three tests and the average of the three tests shall be not less than value in Table H (MW 79-C)

Copyright National Electrical Manufacturers Association
Provided by IHS under license with NEMA
No reproduction or networking permitted without license from IHS
Not for Resale

POLYURETHANE, HEAVY ENAMELLED ROUND COPPER MAGNET WIRE FOR SOLDERABLE APPLICATIONS THERMAL CLASS 155

Table H (MW 79-C)

AWG Size	Bare Wire Diameter, Inches†			Insulation†		Elongation, Minimum Percent	Scrape, Grams to Fail		Springback, Maximum Degrees per Turn	Dielectric Strength, Minimum Breakdown Volts	AWG Size
	Minimum	Nominal	Maximum	Minimum Increase in Diameter, Inches	Maximum Overall Diameter, Inches		Average	Minimum			
25	0.0177	0.0179	0.0180	0.0018	0.0203	28	720	615	72	4725	25
26	0.0157	0.0159	0.0160	0.0017	0.0182	27	675	575	76	4600	26
27	0.0141	0.0142	0.0143	0.0016	0.0164	27	635	540	80	4500	27
28	0.0125	0.0126	0.0127	0.0016	0.0147	26	595	510	55	4375	28
29	0.0112	0.0113	0.0114	0.0015	0.0133	26	560	480	61	4250	29
30	0.0099	0.0100	0.0101	0.0014	0.0119	25	525	450	66	4150	30
31	0.0088	0.0089	0.0090	0.0013	0.0108	24	...	...	..	3825	31
32	0.0079	0.0080	0.0081	0.0012	0.0098	24	...	...	..	3525	32
33	0.0070	0.0071	0.0072	0.0011	0.0088	23	...	...	..	3250	33
34	0.0062	0.0063	0.0064	0.0010	0.0078	22	...	...	..	2975	34
35	0.0055	0.0056	0.0057	0.0009	0.0070	21	...	...	..	2750	35
36	0.0049	0.0050	0.0051	0.0008	0.0063	20	...	...	..	2525	36
37	0.0044	0.0045	0.0046	0.0008	0.0057	20	...	...	..	2325	37
38	0.0039	0.0040	0.0041	0.0007	0.0051	19	...	...	..	2150	38
39	0.0034	0.0035	0.0036	0.0006	0.0045	18	...	...	..	1975	39
40	0.0030	0.0031	0.0032	0.0006	0.0040	17	...	...	..	1800	40
41	0.0027	0.0028	0.0029	0.0005	0.0036	17	...	...	..	1675	41
42	0.0024	0.0025	0.0026	0.0004	0.0032	16	...	...	..	1525	42
43	0.0021	0.0022	0.0023	0.0004	0.0029	15	...	...	..	1400	43
44	0.0019	0.0020	0.0021	0.0004	0.0027	14	...	...	..	1300	44
	Conductor Resistance at 20°C, Ohms per Foot †, ‡						Theoretical Nominal Bare Wire Diameter, Inches †, ‡				
	Minimum	Nominal	Maximum								
45	3.080	3.348	3.616	0.00030	0.00230	11		0.00176			45
46	3.870	4.207	4.544	0.00030	0.00210	10		0.00157			46
47	4.868	5.291	5.714	0.00030	0.00190	8		0.00140			47
48	6.205	6.745	7.285	0.00020	0.00170	7		0.00124			48
49	7.744	8.417	9.090	0.00020	0.00150	6		0.00111			49
50	9.734	10.58	11.43	0.00020	0.00140	5		0.00099			50

*This maximum bare wire diameter shall be permitted to be exceeded; see 1.4.9.1.
†For metric equivalent, see 1.5.
‡Conductor size tolerance based on resistance; see 1.4.9.2.
NOTE: For direct conversion inches to millimeters, multiply inches by the factor 25.4 (exact). (This note approved as Authorized Engineering Information 3-11-1987.)

Copyright National Electrical Manufacturers Association
Provided by IHS under license with NEMA
No reproduction or networking permitted without license from IHS
Not for Resale

POLYURETHANE OVERCOATED WITH POLYAMIDE, SINGLE ENAMELLED ROUND COPPER MAGNET WIRE FOR SOLDERABLE APPLICATIONS THERMAL CLASS 155

INSULATING MATERIALS. The conductor shall be coated with a dual film. The underlying coating is based on polyurethane resins (1.2.2.2). The superimposed coating is based on polyamide resins (1.2.2.2).

THERMAL CLASS. 155°C when tested in accordance with Part 1, para. 1.6 and Part 3, para. 3.58.1.1.

GENERAL REQUIREMENTS. See Part 1.

Characteristics	Test Procedure, See Part 3, Paragraph	Requirements
1. DIMENSIONS	3.1.1.1	See Table S (MW 80-C)
2. ADHERENCE AND FLEXIBILITY	3.2.1.1	No cracks visible in the film coating
3. ELONGATION	3.3.1.1	Not less than value in Table S (MW 80-C)
4. HEAT SHOCK	3.4.1.1	No cracks visible in the film coating after conditioning at 175°C
6. SPRINGBACK	3.6.1.1	Not greater than value in Table S (MW 80-C)
7. DIELECTRIC STRENGTH	3.7.1.1	Not less than value in Table S (MW 80-C)
8. CONTINUITY	3.8.1.1	The number of discontinuities shall not exceed 25 when tested in accordance with the following: 14–30 AWG para. 3.8.1.1.1 31–44 AWG para. 3.8.1.1.1 or 3.8.1.1.2
12. SOLDERABILITY	3.12.1.1	Covered with continuous film of solder after immersion as follows:▲ 14–19 AWG 10 seconds at 430°C 20–23 AWG 8 seconds at 430°C 24–29 AWG 6 seconds at 390°C 30–36 AWG 5 seconds at 390°C 37–44 AWG 4 seconds at 390°C

PERIODIC CONFORMANCE TESTS

50. THERMOPLASTIC FLOW	3.50.1.1	Median not less than 200°C with heavy film coated 18 or 36 AWG
51. SOLUBILITY	3.51.1.1	A specimen of heavy film coated 18 or 36 AWG immersed in xylene shall not soften sufficiently to expose the bare conductor
52. DIELECTRIC STRENGTH AT RATED TEMPERATURE	3.52.1.1	Heavy film coated wire shall average not less than 3825 volts for 18 AWG or 1725 volts for 36 AWG
59. SCRAPE RESISTANCE	3.59.1.1	Lowest "grams-to-fail" load for any one of the three tests and the average of the three tests shall be not less than the values in Table S (MW 80-C)

Copyright National Electrical Manufacturers Association
Provided by IHS under license with NEMA
No reproduction or networking permitted without license from IHS
Not for Resale

POLYURETHANE OVERCOATED WITH POLYAMIDE, SINGLE ENAMELLED ROUND COPPER MAGNET WIRE FOR SOLDERABLE APPLICATIONS THERMAL CLASS 155

Table S (MW 80-C)

AWG Size	Bare Wire Diameter, Inches†			Insulation†		Elongation, Minimum Percent	Scrape, Grams to Fail		Springback, Maximum Degrees per Turn	Dielectric Strength, Minimum Breakdown Volts	AWG Size
	Minimum	Nominal	Maximum	Minimum Increase in Diameter, Inches	Maximum Overall Diameter, Inches		Average	Minimum			
14	0.0635	0.0641	0.0644*	0.0016	0.0666	33	840	715	42	3175	14
15	0.0565	0.0571	0.0574*	0.0015	0.0594	33	780	665	46	3075	15
16	0.0503	0.0508	0.0511*	0.0014	0.0531	33	735	625	50	3000	16
17	0.0448	0.0453	0.0455*	0.0014	0.0475	32	690	585	54	2925	17
18	0.0399	0.0403	0.0405*	0.0013	0.0424	32	645	550	58	2850	18
19	0.0355	0.0359	0.0361*	0.0012	0.0379	31	600	510	62	2775	19
20	0.0317	0.0320	0.0322*	0.0012	0.0339	30	560	475	66	2700	20
21	0.0282	0.0285	0.0286*	0.0011	0.0303	30	525	445	53	2625	21
22	0.0250	0.0253	0.0254*	0.0011	0.0270	29	490	415	58	2575	22
23	0.0224	0.0226	0.0227*	0.0010	0.0243	29	460	390	62	2500	23
24	0.0199	0.0201	0.0202*	0.0010	0.0217	28	430	365	67	2425	24
25	0.0177	0.0179	0.0180*	0.0009	0.0194	28	400	340	72	2375	25
26	0.0157	0.0159	0.0160*	0.0009	0.0173	27	380	325	76	2300	26
27	0.0141	0.0142	0.0143	0.0008	0.0156	27	355	300	50	2250	27
28	0.0125	0.0126	0.0127	0.0008	0.0140	26	335	285	55	2175	28
29	0.0112	0.0113	0.0114	0.0007	0.0126	26	310	265	61	2150	29
30	0.0099	0.0100	0.0101	0.0007	0.0112	25	295	250	66	2075	30
31	0.0088	0.0089	0.0090	0.0006	0.0100	24	...	...	..	1875	31
32	0.0079	0.0080	0.0081	0.0006	0.0091	24	...	...	..	1675	32
33	0.0070	0.0071	0.0072	0.0005	0.0081	23	...	...	..	1500	33
34	0.0062	0.0063	0.0064	0.0005	0.0072	22	...	...	..	1350	34
35	0.0055	0.0056	0.0057	0.0004	0.0064	21	...	...	..	1200	35
36	0.0049	0.0050	0.0051	0.0004	0.0058	20	...	...	..	1075	36
37	0.0044	0.0045	0.0046	0.0003	0.0052	20	...	...	..	975	37
38	0.0039	0.0040	0.0041	0.0003	0.0047	19	...	...	..	850	38
39	0.0034	0.0035	0.0036	0.0002	0.0041	18	...	...	..	775	39
40	0.0030	0.0031	0.0032	0.0002	0.0037	17	...	...	..	700	40
41	0.0027	0.0028	0.0029	0.0002	0.0033	17	...	...	..	625	41
42	0.0024	0.0025	0.0026	0.0002	0.0030	16	...	...	..	575	42
43	0.0021	0.0022	0.0023	0.0002	0.0026	15	...	...	..	500	43
44	0.0019	0.0020	0.0021	0.0001	0.0024	14	...	...	..	450	44

*This maximum bare wire diameter shall be permitted to be exceeded; see 1.4.9.1.
†For metric equivalent, see 1.5.
NOTE: For direct conversion inches to millimeters, multiply inches by the factor 25.4 (exact). (This note approved as Authorized Engineering Information 3-11-1987.)

Copyright National Electrical Manufacturers Association
Provided by IHS under license with NEMA
No reproduction or networking permitted without license from IHS
Not for Resale

POLYURETHANE OVERCOATED WITH POLYAMIDE, HEAVY ENAMELLED ROUND COPPER MAGNET WIRE FOR SOLDERABLE APPLICATIONS THERMAL CLASS 155

INSULATING MATERIALS. The conductor shall be coated with a dual film. The underlying coating is based on polyurethane resins (1.2.2.2). The superimposed coating is based on polyamide resins (1.2.2.2).

THERMAL CLASS. 155°C when tested in accordance with Part 1, para. 1.6 and Part 3, para. 3.58.1.1.

GENERAL REQUIREMENTS. See Part 1.

Characteristics	Test Procedure, See Part 3, Paragraph	Requirements
1. DIMENSIONS	3.1.1.1	See Table H (MW 80-C)
2. ADHERENCE AND FLEXIBILITY	3.2.1.1	No cracks visible in the film coating
3. ELONGATION	3.3.1.1	Not less than value in Table H (MW 80-C)
4. HEAT SHOCK	3.4.1.1	No cracks visible in the film coating after conditioning at 175°C
6. SPRINGBACK	3.6.1.1	Not greater than value in Table H (MW 80-C)
7. DIELECTRIC STRENGTH	3.7.1.1	Not less than value in Table H (MW 80-C)
8. CONTINUITY	3.8.1.1	The number of discontinuities shall not exceed 5 for 14–24 AWG, 7 for 25–30 AWG, or 5 for 31–44 AWG, when tested in accordance with the following: 14–30 AWG para. 3.8.1.1.1 31–44 AWG para. 3.8.1.1.1 or 3.8.1.1.2
12. SOLDERABILITY	3.12.1.1	Covered with continuous film of solder after immersion as follows:▲ 14–19 AWG 10 seconds at 430°C 20–23 AWG 8 seconds at 430°C 24–29 AWG 6 seconds at 390°C 30–36 AWG 5 seconds at 390°C 37–44 AWG 4 seconds at 390°C

PERIODIC CONFORMANCE TESTS

50. THERMOPLASTIC FLOW	3.50.1.1	Median not less than 200°C with heavy film coated 18 or 36 AWG
51. SOLUBILITY	3.51.1.1	A specimen of heavy film coated 18 or 36 AWG immersed in xylene shall not soften sufficiently to expose the bare conductor
52. DIELECTRIC STRENGTH AT RATED TEMPERATURE	3.52.1.1	Heavy film coated wire shall average not less than 3825 volts for 18 AWG or 1725 volts for 36 AWG
59. SCRAPE RESISTANCE	3.59.1.1	Lowest "grams-to-fail" load for any one of the three tests and the average of the three tests shall be not less than the values in Table H (MW 80-C)

Copyright National Electrical Manufacturers Association
Provided by IHS under license with NEMA
No reproduction or networking permitted without license from IHS

Not for Resale

POLYURETHANE OVERCOATED WITH POLYAMIDE, HEAVY ENAMELLED ROUND COPER MAGNET WIRE FOR SOLDERABLE APPLICATIONS THERMAL CLASS 155

Table H (MW 80-C)

AWG Size	Bare Wire Diameter, Inches†			Insulation†		Elongation, Minimum Percent	Scrape, Grams to Fail		Springback, Maximum Degrees per Turn	Dielectric Strength, Minimum Breakdown Volts	AWG Size
	Minimum	Nominal	Maximum	Minimum Increase in Diameter, Inches	Maximum Overall Diameter, Inches		Average	Minimum			
14	0.0635	0.0641	0.0644 *	0.0032	0.0682	33	1490	1270	42	5700	14
15	0.0565	0.0571	0.0574 *	0.0030	0.0609	33	1400	1190	46	5550	15
16	0.0503	0.0508	0.0511 *	0.0029	0.0545	33	1310	1115	50	5400	16
17	0.0448	0.0453	0.0455 *	0.0028	0.0488	32	1230	1045	54	5275	17
18	0.0399	0.0403	0.0405 *	0.0026	0.0437	32	1150	980	58	5125	18
19	0.0355	0.0359	0.0361 *	0.0025	0.0391	31	1070	910	62	5000	19
20	0.0317	0.0320	0.0322 *	0.0023	0.0351	30	1000	850	66	4850	20
21	0.0282	0.0285	0.0286 *	0.0022	0.0314	30	940	800	53	4725	21
22	0.0250	0.0253	0.0254 *	0.0021	0.0281	29	880	750	58	4625	22
23	0.0224	0.0226	0.0227 *	0.0020	0.0253	29	820	700	62	4500	23
24	0.0199	0.0201	0.0202 *	0.0019	0.0227	28	770	655	67	4375	24
25	0.0177	0.0179	0.0180 *	0.0018	0.0203	28	720	615	72	4250	25
26	0.0157	0.0159	0.0160 *	0.0017	0.0182	27	675	575	76	4150	26
27	0.0141	0.0142	0.0143	0.0016	0.0164	27	635	540	50	4050	27
28	0.0125	0.0126	0.0127	0.0016	0.0147	26	595	510	55	3950	28
29	0.0112	0.0113	0.0114	0.0015	0.0133	26	560	480	61	3825	29
30	0.0099	0.0100	0.0101	0.0014	0.0119	25	525	450	66	3725	30
31	0.0088	0.0089	0.0090	0.0013	0.0108	24	...	...	..	3450	31
32	0.0079	0.0080	0.0081	0.0012	0.0098	24	...	...	..	3175	32
33	0.0070	0.0071	0.0072	0.0011	0.0088	23	...	...	..	2925	33
34	0.0062	0.0063	0.0064	0.0010	0.0078	22	...	...	..	2675	34
35	0.0055	0.0056	0.0057	0.0009	0.0070	21	...	...	..	2475	35
36	0.0049	0.0050	0.0051	0.0008	0.0063	20	...	...	..	2275	36
37	0.0044	0.0045	0.0046	0.0008	0.0057	20	...	...	..	2100	37
38	0.0039	0.0040	0.0041	0.0007	0.0051	19	...	...	..	1925	38
39	0.0034	0.0035	0.0036	0.0006	0.0045	18	...	...	..	1775	39
40	0.0030	0.0031	0.0032	0.0006	0.0040	17	...	...	..	1625	40
41	0.0027	0.0028	0.0029	0.0005	0.0036	17	...	...	..	1500	41
42	0.0024	0.0025	0.0026	0.0004	0.0032	16	...	...	..	1375	42
43	0.0021	0.0022	0.0023	0.0004	0.0029	15	...	...	..	1250	43
44	0.0019	0.0020	0.0021	0.0004	0.0027	14	...	...	..	1175	44

*This maximum bare wire shall be permitted to be exceeded; see 1.4.9.1.
†For metric equivalents, see 1.5.
NOTE: For direct conversion of inches to millimeters, multiply inches by the factor 25.4 (exact). (This note approved as Authorized Engineering Information 3-11-1987.)

Copyright National Electrical Manufacturers Association
Provided by IHS under license with NEMA
No reproduction or networking permitted without license from IHS
Not for Resale

National Electrical Manufacturers Association
2101 L Street, N.W. Suite 300
Washington, D.C. 20037 (202) 457-8400

PROPOSED, NEW AND REVISED STANDARDS

MWS Page 49
December 11, 1989

TO ALL REPRESENTATIVES OF MEMBER COMPANIES IN THE MAGNET WIRE SECTION

Subject: Revision No. **2** to NEMA Standards Publication for *Magnet Wire*, NEMA Pub. No. **MW 1000-1987**.

Dear Representative:

Revision No. **2**, consisting of printed pages dated MAY 1988 and MARCH 1989, is enclosed for insertion into your copy of the subject publication. Also enclosed is a title page to indicate that your book now contains Revision 2 and that the document has been approved by ANSI. Please note that ANSI approved only the base publication, not including either revision.

To bring your copy of NEMA Publication No. MW 1000-1987 up-to-date, please insert the attached revised pages in their proper place and delete the pages they replace.

Sincerely,

Krystyna A. McIver

Krystyna A. McIver
Standards Publications Editor
NEMA

Copyright National Electrical Manufacturers Association
Provided by IHS under license with NEMA
No reproduction or networking permitted without license from IHS
Not for Resale

NEMA MW*1000 87 ■ 6470247 0020589 9 ■

MW 1000
MAGNET WIRE

Revision No. 1—October 1987
Revision No. 2—March 1989

ANSI Approval Date: July 14, 1989

(ANSI approval reflects only the base publication, not its revisions.)

Published by:
National Electrical Manufacturers Association
2101 L Street, N.W.
Washington, DC 20037

© 1987 by National Electrical Manufacturers Association

Copyright National Electrical Manufacturers Association
Provided by IHS under license with NEMA
No reproduction or networking permitted without license from IHS

Not for Resale

PART 2—PROPERTIES AND REQUIREMENTS

Insulation	Thermal Class	Round	Rectangular and Square	Part 2 Section	Page
Oleoresinous (Single)	105	X	–	MW 1-C	23
Polyurethane (Single and Heavy)	105	X	–	MW 2-C	25
Polyurethane with Self-bonding Overcoat (Types 1 and 2)	105	X	–	MW 3-C	29
Polyester (Single and Heavy)	155	X	–	MW 5-C	33
Polyamide (Single and Heavy)	105	X	–	MW 6-C	37
Epoxy (Single, Heavy, and Triple)	130	X	–	MW 9-C	41
Cotton covered (Single and Double)	90 or 105	X	–	MW 11-C	47
Epoxy (Heavy and Quadruple)	130	–	X	MW 14-C	51
Polyvinyl acetal (Single and Heavy)	105	X	–	MW 15-A	53
Polyvinyl acetal (Single, Heavy and Triple)	105	X	–	MW 15-C	57
Polyimide (Single, Heavy and Triple)	220	X	–	MW 16-C	63
Polyvinyl acetal overcoated with polyamide (Single and Heavy)	105	X	–	MW 17-C	69
Polyvinyl acetal (Heavy and Quadruple)	105	–	X	MW 18-A	73
	105	–	X	MW 18-C	75
Polyvinyl acetal with Self-bonding overcoat (Types 1, 2, and 3)	105	X	–	MW 19-C	77
Polyimide (Heavy and Quadruple)	220	–	X	MW 20-C	83
Silk-covered (Single and Double)	90 or 105	X	–	MW 21-C	85
Nylon fiber covered (Single and Double)	90 or 105	X	–	MW 22-C	89
Polyester (amide) (imide) overcoated with polyamide (Single and Heavy)	155	X	–	MW 24-A	93
Polyester (amide) (imide) overcoated with polyamide (Single, Heavy and Triple)	155	X	–	MW 24-C	97
Polyester (imide) coated (Single and Heavy)	155	X	–	MW 26-C	103
Polyester (imide) overcoated with polyamide (Single and Heavy)	155	X	–	MW 27-C	107
Polyurethane overcoated with polyamide (Single and Heavy)	130	X	–	MW 28-C	111
Polyurethane overcoated with polyamide and self-bonding overcoated (Types 1 and 2)	105	X	–	MW 29-C	115
Polyester (amide) (imide) (Single, Heavy and Triple)	180	X	–	MW 30-C	119
Paper covered	90 or 105	X	–	MW 31-C	125
Double paper single cotton covered	90 or 105	–	X	MW 32-C	127
Paper covered	90 or 105	–	X	MW 33-C	129
Polyester (amide) (imide) overcoated with polyamideimide (Single and Heavy)	220	X	–	MW 35-A	131
(Single, Heavy and Triple)	200	X	–	MW 35-C	135
(Heavy and Quadruple)	220	–	X	MW 36-A	141
	200	–	X	MW 36-C	143
Glass fiber covered (Single and Double)	155	X	–	MW 41-C	145
Glass fiber covered (Single and Double)	155	–	X	MW 42-C	149
Glass fiber covered silicone treated (Single and Double)	200	–	X	MW 43-C	157
	200	X	–	MW 44-C	165
Polyester glass fiber covered (Single and Double)	155	X	–	MW 45-C	169
	155	–	X	MW 46-C	173
Polyester glass fiber covered silicone treated (Single and Double)	200	X	–	MW 47-C	181
	200	–	X	MW 48-C	185
Glass fiber covered, High temperature organic varnish treated (Single and Double)	180	X	–	MW 50-C	193
Polyester glass fiber covered High temperature organic varnish treated (Single and Double)	180	X	–	MW 51-C	197
Glass fiber covered, High temperature organic varnish treated (Single and Double)	180	–	X	MW 52-C	201
Polyester glass fiber covered, High temperature organic varnish treated (Single and Double)	180	–	X	MW 53-C	209

Copyright National Electrical Manufacturers Association
Provided by IHS under license with NEMA
No reproduction or networking permitted without license from IHS
Not for Resale

PART 2—PROPERTIES AND REQUIREMENTS *(Cont'd)*

Insulation	Thermal Class	Round	Rectangular and Square	Part 2 Section	Page
Aromatic polyamide paper covered	220	–	X	MW 60-A	217
	220	–	X	MW 60-C	219
	220	X	–	MW 61-A	221
	220	X	–	MW 61-C	223
Polyimide for Hermetic Applications (Heavy)	220	X	–	MW 71-C	225
Polyester (amide) (imide) for Hermetic Applications (Heavy)	180	X	–	MW 72-C	227
Polyester (amide) (imide) overcoated with Polyamideimide for Hermetic Applications (Heavy)	220	X	–	MW 73-A	229
	200	X	–	MW 73-C	231
Polyester (amide) (imide)	220	X	–	MW 74-A	233
(Single and Heavy)	200	X	–	MW 74-C	237
Polyurethane (Single and Heavy)	130	X	–	MW 75-C	241
Polyester (amide) (imide)					
(Single and Heavy)	180	X	–	MW 76-A	245
(Single, Heavy and Triple)	180	X	–	MW 76-C	249
Polyester (imide) (Single and Heavy)	180	X	–	MW 77-C	255
Polyester (imide) overcoated with Polyamide (Single and Heavy)	180	X	–	MW 78-C	259
Polyurethane overcoated with Polyamide (Single and Heavy)	155	X	–	MW 80-C	263

Copyright National Electrical Manufacturers Association
Provided by IHS under license with NEMA
No reproduction or networking permitted without license from IHS
Not for Resale

NEMA MW*1000 87 ■ 6470247 0020592 9 ■

Part 1
GENERAL

1.1 REFERENCED STANDARDS

In this publication, reference is made to the standards listed below:

American Society for Testing and Materials
1916 Race Street
Philadelphia, PA 19103

ASTM B3-74 (1980)	*Standard Specification for Soft or Annealed Copper Wire*
ASTM B32-83	*Standard Specification for Solder Metal*
ASTM B193-78 (1983)	*Standard Test Method for Resistivity of Electrical Conductor Materials*
ASTM D149-81	*Standard Test Method for Dielectric Breakdown Voltage and Dielectric Strength of Solid Electrical Insulating Materials at Commercial Power Frequencies*
ASTM D1676-83	*Standard Methods for Testing Film-Insulated Magnet Wire*
ASTM D1932-83	*Standard Test Method for Thermal Endurance of Flexible Electrical Insulating Varnishes*
ASTM D2307-86	*Standard Test Method for Relative Thermal Endurance of Film-Insulated Round Magnet Wire*
ASTM D3353-82	*Standard Methods for Testing Fibrous-Insulated Magnet Wire*
ASTM E8-84	*Standard Methods of Tension Testing of Metallic Materials*
ASTM E29-67 (1980)	*Standard Recommended Practice for Indicating Which Places of Figures are to be Considered Significant in Specified Limiting Values*

American National Standards Institute /
Institute of Electrical and Electronics Engineers
1430 Broadway
New York, NY 10018

345 East 47th Street
New York, NY 10017

ANSI/IEEE Std 1-1986	*General Principles for Temperature Limits in the Rating of Electric Equipment and for the Evaluation of Electrical Insulation*
ANSI/IEEE Std 4-1978	*Techniques for High Voltage Testing*

Copyright National Electrical Manufacturers Association
Provided by IHS under license with NEMA
No reproduction or networking permitted without license from IHS
Not for Resale

1.2 MATERIALS

1.2.1 Conductors—Round, Square and Rectangular, Copper and Aluminum

1.2.1.1 DIMENSIONS AND RESISTIVITY

The conductor, after insulating, shall comply with the requirements given for dimensions in the applicable section in Part 2. The resistivity shall be determined in accordance with ASTM B193 and shall not exceed the following values:

Conductors	Maximum Resistivity	
	Ohm-circular mil/ft	Ohm mm^2/m
Copper	10.371	0.017241
Aluminum	16.782	0.027898

These resistivities correspond to a conductivity, in percent International Annealed Copper Standard (IACS), of 100 for copper and 61.8 for aluminum at 20 °C (68 °F).

This standards publication specifies a minimum conductivity for copper of 100 percent IACS and shall not exclude the possibility of the use of coppers over 100 percent IACS. Likewise, a conductivity of 61.8 percent for aluminum shall not exclude the use of aluminum with higher conductivities. The current state of conductor processing has made possible the use of higher conductivity metals. (This paragraph is classified as Authorized Engineering Information.)

1.2.1.2 CHARACTERISTICS OF ALUMINUM

The mechanical, electrical, and chemical characteristics of aluminum magnet wire differ from those of copper magnet wire because of the inherent differences in the conductor materials.

The differences are reflected in certain test procedures and/or performance requirements for aluminum magnet wire, such as elongation, adherence and flexibility, heat shock, scrape resistance, continuity, and thermal endurance.

Film-coated aluminum round wire sizes 10 through 14 AWG (2.59 through 1.63 mm) shall have a yield strength not less than 7000 psi (48.3 MPa) and a tensile strength not less than 13,000 psi (89.6 MPa); sizes 15 through 25 AWG (1.45 through 0.455 mm) shall have a yield strength not less than 8000 psi (55.2 MPa) and a tensile strength not less than 13,000 psi (89.6 MPa). Larger round sizes, all rectangular film-coated and all fibrous-covered wire shall have a yield strength not less than 5000 psi (34.5 MPa) and shall have a tensile strength not less than 9000 psi (62.1 MPa).

The yield strength shall be determined in accordance with the 0.2 percent offset method described in ASTM E8.

The testing procedure may include a prestretch of the specimen of 0.25 percent which may remove small kinks, waves, and bends in the specimen prior to test. (This sentence is classified as Authorized Engineering Information.)

1.2.2 Insulating Materials

1.2.2.1 Film and fibers shall conform to the latest revisions of the applicable standards of ANSI, ASTM, or NEMA.

1.2.2.2 Various resins are referred to under Insulating Materials in Part 2. The resins specified may be modified. A modified resin is defined as: "A resin that has undergone a chemical change, or contains one or more additives to enhance certain performance or application characteristics. It must retain the essential chemical identity of the original resin and the coated conductor must meet all specified test requirements of the appropriate MW Standard."

1.2.2.3 Various resins are identified under the Insulating Materials headings in Part 2. These resin descriptions are given with the primary generic type listed first and optional types listed in parentheses. Combinations of the primary generic resin with one or more of those in parentheses which have been found by experience to meet all specified requirements shall also be permitted.

1.3 MANUFACTURING

1.3.1 Application of Insulation

The wire shall be coated or covered with a smooth continuous insulation and shall meet the applicable requirements of Part 2 when the wire is taken directly from the spool, reel, or container.

Film covering shall be smooth and continuous, free from streakiness, blisters, and foreign material.

Fibrous coverings shall be wrapped firmly, closely, evenly, and continuously around the wire. When more than one layer of fibrous covering is applied, adjacent layers shall be wound in opposite directions.

When more than one layer of paper covering is applied, adjacent layers shall be permitted to be wound in the same or in opposite directions.

The relation of the degree of lapping of the paper to the number of layers of paper is as follows:

Degree of Lap	Equivalent Number of Paper Thickness
0	1
½	2
⅔	3
¾	4

Copyright National Electrical Manufacturers Association
Provided by IHS under license with NEMA
No reproduction or networking permitted without license from IHS
Not for Resale

NEMA MW*1000 87 ■ 6470247 0020594 2 ■

Table 1-2
INCH AND METRIC EQUIVALENT DIMENSIONS FOR MAGNET WIRE
HEAVY BUILD, 4 TO 50 AWG

AWG Size	Bare Wire Diameter						Minimum Increase in Diameter		Maximum Overall Diameter		AWG Size
	Minimum		Nominal		Maximum						
	inches	mm	inches	mm	inches	mm	inches	mm	inches	mm	
4	0.2023	5.138	0.2043	5.189	0.2053*	5.215*	0.0037	0.094	0.2098	5.329	4
5	0.1801	4.575	0.1819	4.620	0.1828*	4.643*	0.0036	0.091	0.1872	4.755	5
6	0.1604	4.074	0.1620	4.115	0.1628*	4.135*	0.0035	0.089	0.1671	4.244	6
7	0.1429	3.630	0.1443	3.665	0.1450*	3.683*	0.0034	0.086	0.1491	3.787	7
8	0.1272	3.231	0.1285	3.264	0.1292*	3.282*	0.0033	0.084	0.1332	3.383	8
9	0.1133	2.878	0.1144	2.906	0.1150*	2.921*	0.0032	0.081	0.1189	3.020	9
10	0.1009	2.563	0.1019	2.588	0.1024*	2.601*	0.0031	0.079	0.1061	2.695	10
11	0.0898	2.281	0.0907	2.304	0.0912*	2.316*	0.0030	0.076	0.0948	2.408	11
12	0.0800	2.032	0.0808	2.052	0.0812*	2.062*	0.0029	0.074	0.0847	2.151	12
13	0.0713	1.811	0.0720	1.829	0.0724*	1.839*	0.0028	0.071	0.0757	1.923	13
14	0.0635	1.613	0.0641	1.628	0.0644*	1.636*	0.0032	0.081	0.0682	1.732	14
15	0.0565	1.435	0.0571	1.450	0.0574*	1.458*	0.0030	0.076	0.0609	1.547	15
16	0.0503	1.278	0.0508	1.290	0.0511*	1.298*	0.0029	0.074	0.0545	1.384	16
17	0.0448	1.138	0.0453	1.151	0.0455*	1.156*	0.0028	0.071	0.0488	1.240	17
18	0.0399	1.013	0.0403	1.024	0.0405*	1.029*	0.0026	0.066	0.0437	1.110	18
19	0.0355	0.902	0.0359	0.912	0.0361*	0.917*	0.0025	0.064	0.0391	0.993	19
20	0.0317	0.805	0.0320	0.813	0.0322*	0.818*	0.0023	0.058	0.0351	0.892	20
21	0.0282	0.716	0.0285	0.724	0.0286*	0.726*	0.0022	0.056	0.0314	0.798	21
22	0.0250	0.635	0.0253	0.643	0.0254*	0.645*	0.0021	0.053	0.0281	0.714	22
23	0.0224	0.569	0.0226	0.574	0.0227*	0.577*	0.0020	0.051	0.0253	0.643	23
24	0.0199	0.505	0.0201	0.511	0.0202*	0.513*	0.0019	0.048	0.0227	0.577	24
25	0.0177	0.450	0.0179	0.455	0.0180*	0.457*	0.0018	0.046	0.0203	0.516	25
26	0.0157	0.399	0.0159	0.404	0.0160*	0.406*	0.0017	0.043	0.0182	0.462	26
27	0.0141	0.358	0.0142	0.361	0.0143	0.363	0.0016	0.041	0.0164	0.417	27
28	0.0125	0.318	0.0126	0.320	0.0127	0.323	0.0016	0.041	0.0147	0.373	28
29	0.0112	0.284	0.0113	0.287	0.0114	0.290	0.0015	0.038	0.0133	0.338	29
30	0.0099	0.251	0.0100	0.254	0.0101	0.257	0.0014	0.036	0.0119	0.302	30
31	0.0088	0.224	0.0089	0.226	0.0090	0.299	0.0013	0.033	0.0108	0.274	31
32	0.0079	0.201	0.0080	0.203	0.0081	0.206	0.0012	0.030	0.0098	0.249	32
33	0.0070	0.178	0.0071	0.180	0.0072	0.183	0.0011	0.028	0.0088	0.224	33
34	0.0062	0.157	0.0063	0.160	0.0064	0.163	0.0010	0.025	0.0078	0.198	34
35	0.0055	0.140	0.0056	0.142	0.0057	0.145	0.0009	0.023	0.0070	0.178	35
36	0.0049	0.124	0.0050	0.127	0.0051	0.130	0.0008	0.020	0.0063	0.160	36
37	0.0044	0.112	0.0045	0.114	0.0046	0.117	0.0008	0.020	0.0057	0.145	37
38	0.0039	0.099	0.0040	0.102	0.0041	0.104	0.0007	0.018	0.0051	0.130	38
39	0.0034	0.086	0.0035	0.089	0.0036	0.091	0.0006	0.015	0.0045	0.114	39
40	0.0030	0.076	0.0031	0.079	0.0032	0.081	0.0006	0.015	0.0040	0.102	40
41	0.0027	0.069	0.0028	0.071	0.0029	0.074	0.0005	0.013	0.0036	0.091	41
42	0.0024	0.061	0.0025	0.064	0.0026	0.066	0.0004	0.010	0.0032	0.081	42
43	0.0021	0.053	0.0022	0.056	0.0023	0.058	0.0004	0.010	0.0029	0.074	43
44	0.0019	0.048	0.0020	0.051	0.0021	0.053	0.0004	0.010	0.0027	0.069	44
			Theoretical Nominal Bare Wire Diameter‡								
			inches	mm							
45			0.00176	0.0447			0.0003	0.0076	0.0023	0.0584	45
46			0.00157	0.0399			0.0003	0.0076	0.0021	0.0533	46
47			0.00140	0.0356			0.0003	0.0076	0.0019	0.0483	47
48			0.00124	0.0315			0.0002	0.0051	0.0017	0.0432	48
49			0.00111	0.0282			0.0002	0.0051	0.0015	0.0381	49
50			0.00099	0.0251			0.0002	0.0051	0.0014	0.0356	50

*This bare wire diameter shall be permitted to be exceeded; see 1.4.9.1.
‡Theoretical nominal bare wire diameter by resistance; see 1.4.9.2. See Table 1-12 for resistance metric equivalents.

Copyright National Electrical Manufacturers Association
Provided by IHS under license with NEMA
No reproduction or networking permitted without license from IHS
Not for Resale

NEMA MW*1000 87 ■ 6470247 0020595 4 ■

Table 1-3
INCH AND METRIC EQUIVALENT DIMENSIONS FOR MAGNET WIRE TRIPLE BUILD, 14 TO 30 AWG

AWG Size	Bare Wire Diameter						Minimum Increase in Diameter		Maximum Overall Diameter		AWG Size
	Minimum		Nominal		Maximum						
	inches	mm	inches	mm	inches	mm	inches	mm	inches	mm	
14	0.0635	1.613	0.0641	1.628	0.0644*	1.636*	0.0048	0.122	0.0700	1.778	14
15	0.0565	1.435	0.0571	1.450	0.0574*	1.458*	0.0045	0.114	0.0627	1.593	15
16	0.0503	1.278	0.0508	1.290	0.0511*	1.298*	0.0043	0.109	0.0562	1.427	16
17	0.0448	1.138	0.0453	1.151	0.0455*	1.156*	0.0041	0.104	0.0504	1.280	17
18	0.0399	1.013	0.0403	1.024	0.0405*	1.029*	0.0039	0.099	0.0452	1.148	18
19	0.0355	0.902	0.0359	0.912	0.0361*	0.917*	0.0037	0.094	0.0406	1.031	19
20	0.0317	0.805	0.0320	0.813	0.0322*	0.818*	0.0035	0.089	0.0364	0.925	20
21	0.0282	0.716	0.0285	0.724	0.0286*	0.726*	0.0033	0.084	0.0326	0.828	21
22	0.0250	0.635	0.0253	0.643	0.0254*	0.645*	0.0032	0.081	0.0293	0.744	22
23	0.0224	0.569	0.0226	0.574	0.0227*	0.577*	0.0030	0.076	0.0264	0.671	23
24	0.0199	0.505	0.0201	0.511	0.0202*	0.513*	0.0029	0.074	0.0238	0.605	24
25	0.0177	0.450	0.0179	0.455	0.0180*	0.457*	0.0027	0.069	0.0214	0.544	25
26	0.0157	0.399	0.0159	0.404	0.0160*	0.406*	0.0026	0.066	0.0193	0.490	26
27	0.0141	0.358	0.0142	0.361	0.0143	0.363	0.0024	0.061	0.0173	0.439	27
28	0.0125	0.318	0.0126	0.320	0.0127	0.323	0.0023	0.058	0.0156	0.396	28
29	0.0112	0.284	0.0113	0.287	0.0114	0.290	0.0022	0.056	0.0142	0.361	29
30	0.0099	0.251	0.0100	0.254	0.0101	0.257	0.0021	0.053	0.0128	0.325	30

*This bare wire diameter shall be permitted to be exceeded; see 1.4.9.1.

Copyright National Electrical Manufacturers Association
Provided by IHS under license with NEMA
No reproduction or networking permitted without license from IHS
Not for Resale

NEMA MW*1000 87 ■ 6470247 0020596 6 ■

Table 1-6
INCH AND METRIC EQUIVALENT DIMENSIONS FOR MAGNET WIRE
TYPE 3 SELF-BONDING WIRE, 16 TO 30 AWG

AWG Size	Bare Wire Diameter						Minimum Increase in Diameter				Maximum Overall Diameter		AWG Size
	Minimum		Nominal		Maximum		Film Coating		Thermoplastic Coating				
	inches	mm	inches	mm	inches	mm	inches	mm	inches	mm	inches	mm	
16	0.0503	1.278	0.0508	1.290	0.0511*	1.298*	0.0043	0.109	0.0006	0.015	0.0577	1.466	16
17	0.0448	1.138	0.0453	1.151	0.0455*	1.156*	0.0041	0.104	0.0006	0.015	0.0520	1.321	17
18	0.0399	1.013	0.0403	1.024	0.0405*	1.029*	0.0039	0.099	0.0006	0.015	0.0468	1.189	18
19	0.0355	0.902	0.0359	0.912	0.0361*	0.917*	0.0037	0.094	0.0006	0.015	0.0422	1.072	19
20	0.0317	0.805	0.0320	0.813	0.0322*	0.818*	0.0035	0.089	0.0005	0.013	0.0379	0.903	20
21	0.0282	0.716	0.0285	0.724	0.0286*	0.726*	0.0033	0.084	0.0005	0.013	0.0342	0.869	21
22	0.0250	0.635	0.0253	0.643	0.0254*	0.645	0.0032	0.081	0.0005	0.013	0.0308	0.782	22
23	0.0224	0.569	0.0226	0.574	0.0227*	0.577*	0.0030	0.076	0.0005	0.013	0.0279	0.709	23
24	0.0199	0.505	0.0201	0.511	0.0202*	0.513*	0.0029	0.074	0.0005	0.013	0.0252	0.640	24
25	0.0177	0.450	0.0179	0.455	0.0180*	0.457*	0.0027	0.069	0.0005	0.013	0.0228	0.579	25
26	0.0157	0.399	0.0159	0.404	0.0160*	0.406*	0.0026	0.066	0.0005	0.013	0.0206	0.523	26
27	0.0141	0.358	0.0142	0.361	0.0143	0.363	0.0024	0.061	0.0005	0.013	0.0185	0.470	27
28	0.0125	0.318	0.0126	0.320	0.0127	0.323	0.0023	0.058	0.0005	0.013	0.0166	0.422	28
29	0.0112	0.284	0.0113	0.287	0.0114	0.290	0.0022	0.056	0.0004	0.010	0.0152	0.386	29
30	0.0099	0.251	0.0100	0.254	0.0101	0.257	0.0021	0.053	0.0004	0.010	0.0137	0.348	30

*This bare wire diameter shall be permitted to be exceeded; see 1.4.9.1.

Copyright National Electrical Manufacturers Association
Provided by IHS under license with NEMA
No reproduction or networking permitted without license from IHS
Not for Resale

Copyright National Electrical Manufacturers Association
Provided by IHS under license with NEMA
No reproduction or networking permitted without license from IHS
Not for Resale

NEMA MW*1000 87 ■ 6470247 0020597 8 ■

Table 1-7
INCH AND METRIC EQUIVALENT DIMENSIONS FOR MAGNET WIRE
SINGLE-GLASS-FIBER-COVERED ROUND BARE, SINGLE-FILM-COATED AND HEAVY-FILM-COATED WIRE

AWG Size	Bare Wire Diameter						Minimum Increase Single-glass-fiber Covering		Maximum Overall Diameter, Single-glass-fiber Covered						AWG Size
	Minimum		Nominal		Maximum				Bare		Single-Film		Heavy-Film		
	inches	mm	inches	mm	inches	mm inches	mm	inches	mm	inches	mm	inches	mm	Size	
4/0	0.4554	11.567	0.4600	11.684	0.4646	11.801	0.0045	0.114	0.4716	11.979	...	...	...	...	4/0
3/0	0.4055	10.300	0.4096	10.404	0.4137	10.508	0.0045	0.114	0.4207	10.686	...	...	...	...	3/0
2/0	0.3612	9.174	0.3648	9.266	0.3684	9.357	0.0045	0.114	0.3754	9.535	...	...	...	...	2/0
1/0	0.3217	8.171	0.3249	8.252	0.3281	8.334	0.0045	0.114	0.3351	8.512	...	...	...	...	1/0
1	0.2864	7.275	0.2893	7.348	0.2922	7.422	0.0045	0.114	0.2992	7.600	...	...	...	...	1
2	0.2550	6.477	0.2576	6.543	0.2602	6.609	0.0045	0.114	0.2672	6.787	...	...	...	...	2
3	0.2271	5.768	0.2294	5.827	0.2317	5.885	0.0045	0.114	0.2387	6.063	...	...	...	...	3
4	0.2023	5.138	0.2043	5.189	0.2053*	5.215*	0.0045	0.114	0.2133	5.418	...	...	0.2170	5.512	4
5	0.1801	4.575	0.1819	4.620	0.1828*	4.643*	0.0045	0.114	0.1907	4.844	...	...	0.2170	5.512	5
6	0.1604	4.074	0.1620	4.115	0.1628*	4.135*	0.0045	0.114	0.1706	4.333	...	...	0.1942	4.933	6
7	0.1429	3.630	0.1443	3.665	0.1450*	3.683*	0.0045	0.114	0.1527	3.879	...	...	0.1561	3.965	7
8	0.1272	3.231	0.1285	3.264	0.1292*	3.282*	0.0045	0.114	0.1368	3.475	...	...	0.1402	3.561	8
9	0.1133	2.878	0.1144	2.906	0.1150*	2.921*	0.0045	0.114	0.1225	3.112	...	...	0.1259	3.198	9
10	0.1009	2.563	0.1019	2.588	0.1024*	2.601*	0.0040	0.102	0.1089	2.766	...	...	0.1121	2.847	10
11	0.0898	2.281	0.0907	2.304	0.0912*	2.136*	0.0040	0.102	0.0976	2.479	...	...	0.1008	2.560	11
12	0.0800	2.032	0.0808	2.052	0.0812*	2.062*	0.0040	0.102	0.0876	2.225	...	...	0.0907	2.304	12
13	0.0713	1.811	0.0720	1.829	0.0724*	1.839*	0.0040	0.102	0.0787	1.999	...	...	0.0817	2.075	13
14	0.0635	1.613	0.0641	1.628	0.0644*	1.636*	0.0040	0.102	0.0707	1.796	0.0726	1.844	0.0742	1.885	14
15	0.0565	1.435	0.0571	1.450	0.0574*	1.458*	0.0040	0.102	0.0637	1.618	0.0654	1.661	0.0669	1.699	15
16	0.0503	1.278	0.0508	1.290	0.0511*	1.298*	0.0040	0.102	0.0573	1.455	0.0591	1.501	0.0605	1.537	16
17	0.0448	1.138	0.0453	1.151	0.0455*	1.156*	0.0040	0.102	0.0518	1.316	0.0535	1.359	0.0548	1.392	17
18	0.0399	1.013	0.0403	1.024	0.0405*	1.029*	0.0040	0.102	0.467	1.186	0.0484	1.229	0.0497	1.262	18
19	0.0355	0.902	0.0359	0.912	0.0361*	0.917*	0.0040	0.102	0.0423	1.074	0.0439	1.115	0.0451	1.146	19
20	0.0317	0.805	0.0320	0.813	0.0322*	0.818*	0.0040	0.102	0.383	0.973	0.0399	1.013	0.0411	1.044	20
21	0.0282	0.716	0.0285	0.724	0.0286*	0.726*	0.0040	0.102	0.0348	0.884	0.0363	0.922	0.0374	0.950	21
22	0.0250	0.635	0.0253	0.643	0.0254*	0.645*	0.0040	0.102	0.0316	0.803	0.0330	0.838	0.0341	0.866	22
23	0.0244	0.569	0.0226	0.574	0.0227*	0.577*	0.0040	0.102	0.0288	0.732	0.0303	0.770	0.0313	0.795	23
24	0.0199	0.505	0.0201	0.511	0.0202*	0.513*	0.0025	0.064	0.0243	0.617	0.0257	0.653	0.0267	0.678	24
25	0.0177	0.450	0.0179	0.455	0.0180*	0.457*	0.0025	0.064	0.0221	0.561	0.0234	0.594	0.0243	0.617	25
26	0.0157	0.399	0.0159	0.404	0.0160*	0.406*	0.0025	0.064	0.0201	0.511	0.0213	0.541	0.0222	0.564	26
27	0.0141	0.358	0.0142	0.361	0.0143	0.363	0.0025	0.064	0.0183	0.465	0.0196	0.498	0.0204	0.518	27
28	0.0125	0.318	0.0126	0.320	0.0127	0.323	0.0025	0.064	0.0167	0.424	0.0180	0.457	0.0187	0.475	28
29	0.0112	0.284	0.0113	0.287	0.0114	0.290	0.0025	0.064	0.0154	0.391	0.0166	0.422	0.0173	0.439	29
30	0.0099	0.251	0.0100	0.254	0.0101	0.257	0.0025	0.064	0.0141	0.358	0.0152	0.386	0.0159	0.404	30

*This bare wire diameter shall be permitted to be exceeded; see 1.4.9.1.

Copyright National Electrical Manufacturers Association
Provided by IHS under license with NEMA
No reproduction or networking permitted without license from IHS
Not for Resale

Table 1-8
INCH AND METRIC EQUIVALENT DIMENSIONS FOR MAGNET WIRE
DOUBLE-GLASS-FIBER-COVERED ROUND BARE, SINGLE-FILM-COATED AND HEAVY-FILM-COATED WIRE

AWG Size	Bare Wire Diameter						Minimum Increase Single-glass-fiber Covering		Maximum Overall Diameter, Single-glass-fiber Covered						AWG Size
	Minimum		Nominal		Maximum				Bare		Single-Film		Heavy-Film		
	inches	mm	inches	mm	inches	mm	inches	mm	inches	mm	inches	mm	inches	mm	
4/0	0.4554	11.567	0.4600	11.684	0.4646	11.801	0.0070	0.178	0.4756	12.080	...	...	...	...	4/0
3/0	0.4055	10.300	0.4096	10.404	0.4137	10.508	0.0070	0.178	0.4247	10.787	...	...	...	...	3/0
2/0	0.3612	9.174	0.3648	9.266	0.3684	9.357	0.0070	0.178	0.3794	9.637	...	...	...	...	2/0
1/0	0.3217	8.171	0.3249	8.252	0.3281	8.334	0.0070	0.178	0.3391	8.613	...	...	...	...	1/0
1	0.2864	7.275	0.2893	7.348	0.2922	7.422	0.0070	0.178	0.3032	7.701	...	...	...	...	1
2	0.2550	6.477	0.2576	6.543	0.2602	6.609	0.0070	0.178	0.2712	6.888	...	...	...	...	2
3	0.2271	5.769	0.2291	5.827	0.2317	5.885	0.0070	0.178	0.2427	6.165	...	...	...	...	3
4	0.2023	5.138	0.2043	5.189	0.2053*	5.215*	0.0070	0.178	0.2173	5.520	...	...	0.2210	5.613	4
5	0.1801	4.575	0.1819	4.620	0.1828*	4.643*	0.0070	0.178	0.1947	4.945	...	...	0.1982	5.034	5
6	0.1604	4.074	0.1620	4.115	0.1628*	4.135*	0.0070	0.178	0.1567	4.435	...	...	0.1781	4.524	6
7	0.1429	3.630	0.1443	3.665	0.1450*	3.683*	0.0070	0.178	0.1567	3.980	...	...	0.1601	4.067	7
8	0.1272	3.231	0.1285	3.264	0.1292*	3.282*	0.0070	0.178	0.1408	3.576	...	...	0.1442	3.663	8
9	0.1133	2.878	0.1144	2.906	0.1150*	2.921*	0.0070	0.178	0.1265	3.213	...	...	0.1299	3.299	9
10	0.1009	2.563	0.1019	2.588	0.1024*	2.601*	0.0060	0.152	0.1119	2.842	...	...	0.1151	2.924	10
11	0.0898	2.281	0.0907	2.304	0.0912*	2.316*	0.0060	0.152	0.1006	2.555	...	...	0.1038	2.637	11
12	0.0800	2.032	0.0808	2.052	0.0812*	2.062*	0.0060	0.152	0.0906	2.301	...	...	0.0937	2.380	12
13	0.0713	1.811	0.0720	1.829	0.0724*	1.839*	0.0060	0.152	0.0817	2.075	...	...	0.0847	2.151	13
14	0.0635	1.613	0.0641	1.628	0.0644*	1.636*	0.0060	0.152	0.0737	1.872	0.0756	1.920	0.0772	1.961	14
15	0.0565	1.435	0.0571	1.450	0.0574*	1.458*	0.0060	0.152	0.0667	1.694	0.0684	1.737	0.0699	1.775	15
16	0.0503	1.278	0.0508	1.290	0.0511*	1.298*	0.0060	0.152	0.0603	1.532	0.0621	1.577	0.0635	1.613	16
17	0.0448	1.138	0.0453	1.151	0.0455*	1.156*	0.0060	0.152	0.0548	1.392	0.0565	1.435	0.0578	1.468	17
18	0.0399	1.013	0.0403	1.024	0.0405*	1.029*	0.0060	0.152	0.0497	1.262	0.0514	1.306	0.0527	1.339	18
19	0.0355	0.902	0.0359	0.912	0.0361*	0.917*	0.0060	0.152	0.0435	1.151	0.0469	1.191	0.0481	1.222	19
20	0.0317	0.805	0.0320	0.813	0.0322*	0.818*	0.0060	0.152	0.0413	1.049	0.0429	1.090	0.0441	1.120	20
21	0.0282	0.716	0.0285	0.724	0.0286*	0.726*	0.0060	0.152	0.0378	0.960	0.0393	0.998	0.0404	1.026	21
22	0.0250	0.635	0.0253	0.643	0.0254*	0.645*	0.0060	0.152	0.0346	0.879	0.0360	0.914	0.0371	0.942	22
23	0.0224	0.569	0.0226	0.574	0.0227*	0.577*	0.0060	0.152	0.0318	0.808	0.0333	0.846	0.0343	0.871	23
24	0.0199	0.505	0.0201	0.511	0.0202*	0.513*	0.0045	0.114	0.0263	0.668	0.0277	0.704	0.0287	0.729	24
25	0.0177	0.450	0.0179	0.455	0.0180*	0.457*	0.0045	0.114	0.0241	0.612	0.0254	0.645	0.0263	0.668	25
26	0.0157	0.399	0.0159	0.404	0.0160*	0.406*	0.0045	0.114	0.0221	0.561	0.0233	0.592	0.0242	0.615	26
27	0.0141	0.358	0.0142	0.361	0.0143	0.363	0.0045	0.114	0.0203	0.516	0.0216	0.549	0.0224	0.569	27
28	0.0125	0.318	0.0126	0.320	0.0127	0.323	0.0045	0.114	0.0187	0.475	0.0200	0.508	0.0207	0.526	28
29	0.0112	0.284	0.0113	0.287	0.0114	0.290	0.0045	0.114	0.0174	0.442	0.0186	0.472	0.0193	0.490	29
30	0.0099	0.251	0.0100	0.254	0.0101	0.257	0.0045	0.114	0.0161	0.409	0.0172	0.437	0.0179	0.455	30

*This bare wire diameter shall be permitted to be exceeded; see 1.4.9.1.

Copyright National Electrical Manufacturers Association
Provided by IHS under license with NEMA
No reproduction or networking permitted without license from IHS
Not for Resale

NEMA MW*1000 87 ■ 6470247 0020599 1 ■

Table 1-9
INCH AND METRIC EQUIVALENT DIMENSIONS FOR MAGNET WIRE
SINGLE-POLYESTER-GLASS-FIBER-COVERED ROUND BARE, SINGLE-FILM-COATED AND HEAVY-FILM-COATED WIRE

AWG Size	Bare Wire Diameter						Minimum Increase Single-polyester-glass-fiber Covering		Maximum Overall Diameter, Single-polyester-glass-fiber-covered						AWG Size
	Minimum		Nominal		Maximum				Bare		Single-Film		Heavy-Film		
	inches	mm	inches	mm	inches	mm	inches	mm	inches	mm	inches	mm	inches	mm	
4/0	0.4554	11.567	0.4600	11.684	0.4646	11.801	0.0040	0.102	0.4696	11.928	...	...	...	...	4/0
3/0	0.4055	10.300	0.4096	10.404	0.4137	10.508	0.0040	0.102	0.4187	10.635	...	...	...	...	3/0
2/0	0.3612	9.174	0.3648	9.266	0.3684	9.357	0.0040	0.102	0.3734	9.484	...	...	...	...	2/0
1/0	0.3217	8.171	0.3249	8.252	0.3281	8.334	0.0040	0.102	0.3331	8.461	...	...	...	...	1/0
1	0.2864	7.275	0.2893	7.348	0.2922	7.422	0.0040	0.102	0.2972	7.549	...	...	...	...	1
2	0.2550	6.477	0.2576	6.543	0.2602	6.609	0.0040	0.102	0.2652	6.736	...	...	...	...	2
3	0.2271	5.769	0.2291	5.827	0.2317	5.885	0.0040	0.102	0.2367	6.012	...	...	...	...	3
4	0.2023	5.138	0.2043	5.189	0.2053*	5.215*	0.0040	0.102	0.2123	5.392	...	...	0.2158	5.481	4
5	0.1801	4.575	0.1819	4.620	0.1828*	4.643*	0.0040	0.102	0.1897	4.818	...	...	0.1932	4.907	5
6	0.1604	4.074	0.1620	4.115	0.1628*	4.135*	0.0040	0.102	0.1696	4.308	...	...	0.1731	4.397	6
7	0.1429	3.630	0.1443	3.665	0.1450*	3.683*	0.0040	0.102	0.1517	3.853	...	...	0.1551	3.940	7
8	0.1272	3.231	0.1285	3.264	0.1292*	3.282*	0.0040	0.102	0.1358	3.449	...	...	0.1392	3.536	8
9	0.1133	2.878	0.1144	2.906	0.1150*	2.921*	0.0040	0.102	0.1215	3.086	...	...	0.1249	3.172	9
10	0.1009	2.563	0.1019	2.588	0.1024*	2.601*	0.0035	0.089	0.1079	2.741	...	...	0.1111	2.822	10
11	0.0898	2.281	0.0907	2.304	0.0912*	2.316*	0.0035	0.089	0.0966	2.454	...	...	0.0998	2.535	11
12	0.0800	2.032	0.0808	2.052	0.0812*	2.062*	0.0035	0.089	0.0866	2.200	...	...	0.0897	2.278	12
13	0.0713	1.811	0.0720	1.829	0.0724*	1.839*	0.0035	0.089	0.0777	1.974	...	...	0.0807	2.050	13
14	0.0635	1.613	0.0641	1.628	0.0644*	1.636*	0.0035	0.089	0.0697	1.770	0.0716	1.819	0.0732	1.859	14
15	0.0565	1.435	0.0571	1.450	0.0574*	1.458*	0.0035	0.089	0.0627	1.593	0.0644	1.639	0.0659	1.674	15
16	0.0503	1.278	0.0508	1.290	0.0511*	1.298*	0.0035	0.089	0.0563	1.430	0.0586	1.476	0.0595	1.511	16
17	0.0448	1.138	0.0453	1.151	0.0455*	1.156*	0.0035	0.089	0.0508	1.290	0.0525	1.334	0.0538	1.367	17
18	0.0399	1.013	0.0403	1.024	0.0405*	1.029*	0.0035	0.089	0.0457	1.161	0.0474	1.204	0.0487	1.237	18
19	0.0355	0.902	0.0359	0.912	0.0361*	0.917*	0.0035	0.089	0.0413	1.049	0.0429	1.090	0.0441	1.120	19
20	0.0217	0.805	0.0320	0.813	0.0322*	0.818*	0.0035	0.089	0.0373	0.947	0.0389	0.988	0.0401	1.019	20
21	0.0282	0.716	0.0285	0.724	0.0286*	0.726*	0.0035	0.089	0.0338	0.859	0.0353	0.897	0.0364	0.925	21
22	0.0250	0.635	0.0253	0.643	0.0254*	0.645*	0.0035	0.089	0.0306	0.777	0.0320	0.813	0.0331	0.841	22
23	0.0224	0.569	0.0226	0.574	0.0227*	0.577*	0.0035	0.089	0.0278	0.706	0.0293	0.744	0.0303	0.770	23
24	0.0199	0.505	0.0201	0.511	0.0202*	0.513*	0.0025	0.064	0.0253	0.643	0.0267	0.678	0.0277	0.704	24
25	0.0177	0.450	0.0179	0.455	0.0180*	0.457*	0.0025	0.064	0.0231	0.587	0.0244	0.620	0.0253	0.643	25
26	0.0157	0.399	0.0159	0.404	0.0160*	0.406*	0.0025	0.064	0.0211	0.536	0.0223	0.566	0.0232	0.589	26
27	0.0141	0.358	0.0142	0.361	0.0143	0.363	0.0025	0.064	0.0193	0.490	0.0206	0.523	0.0214	0.544	27
28	0.0125	0.318	0.0126	0.310	0.0127	0.323	0.0025	0.064	0.0177	0.450	0.0190	0.483	0.0197	0.500	28
29	0.0112	0.284	0.0113	0.287	0.0114	0.290	0.0025	0.064	0.0164	0.417	0.0176	0.447	0.0183	0.465	29
30	0.0099	0.251	0.0100	0.254	0.0101	0.257	0.0025	0.064	0.0151	0.384	0.0162	0.411	0.0169	0.429	30

*This bare wire diameter shall be permitted to be exceeded; see 1.4.9.1.

Copyright National Electrical Manufacturers Association
Provided by IHS under license with NEMA
No reproduction or networking permitted without license from IHS
Not for Resale

Table 1-10
INCH AND METRIC EQUIVALENT DIMENSIONS FOR MAGNET WIRE
DOUBLE-POLYESTER-GLASS-FIBER-COVERED ROUND BARE, SINGLE-FILM-COATED AND HEAVY-FILM-COATED WIRE

AWG Size	Bare Wire Diameter						Minimum Increase Double-polyester-glass-fiber Covering		Maximum Overall Diameter, Double-polyester-glass-fiber Covered						AWG Size
	Minimum		Nominal		Maximum				Bare		Single-Film		Heavy-film		
	inches	mm	inches	mm	inches	mm	inches	mm	inches	mm	inches	mm	inches	mm	
4/0	0.4554	11.567	0.4600	11.684	0.4646	11.801	0.0060	0.152	0.4736	12.029	...	...	...	...	4/0
3/0	0.4055	10.300	0.4096	10.404	0.4137	10.508	0.0060	0.152	0.4227	10.737	...	...	...	...	3/0
2/0	0.3612	9.174	0.3648	9.266	0.3684	9.357	0.0060	0.152	0.3774	9.586	...	...	...	...	2/0
1/0	0.3217	8.171	0.3249	8.252	0.3281	8.334	0.0060	0.152	0.3371	8.562	...	...	...	...	1/0
1	0.2864	7.275	0.2893	7.348	0.2922	7.422	0.0060	0.152	0.3012	7.650	...	...	...	...	1
2	0.2550	6.477	0.2576	6.543	0.2602	6.609	0.0060	0.152	0.2692	6.838	...	...	...	...	2
3	0.2271	5.769	0.2294	5.827	0.2317	5.885	0.0060	0.152	0.2407	6.114	...	...	...	...	3
4	0.2023	5.138	0.2043	5.189	0.2053*	5.215*	0.0060	0.152	0.2153	5.469	...	...	0.2188	5.558	4
5	0.1801	4.575	0.1819	4.620	0.1828*	4.643*	0.0060	0.152	0.1927	4.895	...	...	0.1962	4.983	5
6	0.1604	4.074	0.1620	4.115	0.1628*	4.135*	0.0060	0.152	0.1726	4.384	...	...	0.1761	4.473	6
7	0.1429	3.630	0.1443	3.665	0.1450*	3.683*	0.0060	0.152	0.1547	3.929	...	...	0.1581	4.016	7
8	0.1273	3.231	0.1285	3.264	0.1292*	3.282*	0.0060	0.152	0.1388	3.526	...	...	0.1422	3.612	8
9	0.1133	2.878	0.1144	2.906	0.1150*	2.921*	0.0060	0.152	0.1245	3.162	...	...	0.1279	3.249	9
10	0.1009	2.563	0.1019	2.588	0.1024*	2.601*	0.0055	0.140	0.1109	2.817	...	...	0.1141	2.898	10
11	0.0898	2.281	0.0907	2.304	0.0912*	2.316*	0.0055	0.140	0.0996	2.530	...	...	0.1028	2.611	11
12	0.0800	2.032	0.0808	2.052	0.0812*	2.062*	0.0055	0.140	0.0986	2.276	...	...	0.0927	2.355	12
13	0.0713	1.811	0.0720	1.829	0.0724*	1.839*	0.0055	0.140	0.0807	2.050	...	...	0.0837	2.126	13
14	0.0635	1.613	0.0641	1.628	0.0644*	1.636*	0.0055	0.895	0.0727	1.847	0.0746	1.895	0.0762	1.935	14
15	0.0565	1.435	0.0571	1.450	0.0574*	1.458*	0.0055	0.140	0.0657	1.669	0.0674	1.712	0.0689	1.750	15
16	0.0503	1.278	0.0508	1.290	0.0511*	1.298*	0.0055	0.140	0.0593	1.506	0.0611	1.552	0.0625	1.558	16
17	0.0448	1.138	0.0453	1.151	0.0455*	1.156*	0.0055	0.140	0.0538	1.367	0.0555	1.410	0.0568	1.443	17
18	0.0399	1.013	0.0403	1.024	0.0405*	1.029*	0.0055	0.140	0.0487	1.237	0.0504	1.280	0.0517	1.313	18
19	0.0355	0.902	0.0359	0.912	0.0361*	0.917*	0.0055	0.140	0.0443	1.125	0.0459	1.166	0.0471	1.196	19
20	0.0317	0.805	0.0320	0.813	0.0322*	0.818*	0.0055	0.140	0.0403	1.024	0.0419	1.064	0.0431	1.095	20
21	0.0282	0.716	0.0285	0.724	0.0286*	0.726	0.0055	0.140	0.0368	0.935	0.0383	0.973	0.0394	1.001	21
22	0.0250	0.635	0.0253	0.643	0.0254*	0.645*	0.0055	0.140	0.0336	0.853	0.0350	0.889	0.0361	0.917	22
23	0.0224	0.569	0.0226	0.574	0.0227*	0.577*	0.0055	0.140	0.0308	0.782	0.0323	0.820	0.0333	0.846	23
24	0.0199	0.505	0.0210	0.511	0.0202*	0.513*	0.0045	0.114	0.0268	0.681	0.0282	0.716	0.0292	0.742	24
25	0.0177	0.450	0.0179	0.455	0.0180*	0.457*	0.0045	0.114	0.0246	0.625	0.0259	0.658	0.0268	0.681	25
26	0.0157	0.399	0.0159	0.404	0.0160*	0.406*	0.0045	0.114	0.0226	0.574	0.0238	0.605	0.0247	0.627	26
27	0.0141	0.358	0.0142	0.361	0.0143	0.363	0.0045	0.114	0.0208	0.528	0.0221	0.561	0.0229	0.582	27
28	0.0125	0.318	0.0126	0.320	0.0127	0.323	0.0045	0.114	0.0192	0.488	0.0205	0.521	0.0212	0.538	28
29	0.0112	0.284	0.0113	0.287	0.0114	0.290	0.0045	0.114	0.0179	0.455	0.0191	0.485	0.0198	0.503	29
30	0.0099	0.251	0.0100	0.254	0.0101	0.257	0.0045	0.114	0.0166	0.422	0.0177	0.450	0.0184	0.467	30

*This bare wire diameter shall be permitted to be exceeded; see 1.4.9.1.

Table 1-11
MAXIMUM DIAMETERS FOR ROUND BARE WIRE 4 TO 26 AWG

AWG Size	Practical Maximum Diameter Given in Part 2		Full Maximum Diameter	
	inches	mm	inches	mm
4	0.2053	5.215	0.2063	5.240
5	0.1828	4.643	0.1837	4.666
6	0.1628	4.135	0.1636	4.155
7	0.1450	3.683	0.1457	3.701
8	0.1292	3.282	0.1298	3.297
9	0.1150	2.921	0.1155	2.934
10	0.1024	2.601	0.1029	2.614
11	0.0912	2.316	0.0916	2.327
12	0.0812	2.062	0.0816	2.073
13	0.0724	1.839	0.0727	1.847
14	0.0644	1.636	0.0647	1.643
15	0.0574	1.485	0.0577	1.466
16	0.0511	1.298	0.0513	1.303
17	0.0455	1.156	0.0458	1.163
18	0.0405	1.029	0.0407	1.034
19	0.0361	0.917	0.0363	0.922
20	0.0322	0.818	0.0323	0.820
21	0.0286	0.726	0.0288	0.731
22	0.0254	0.645	0.0256	0.650
23	0.0227	0.577	0.0228	0.579
24	0.0202	0.513	0.0203	0.516
25	0.0180	0.457	0.0181	0.460
26	0.0160	0.406	0.0161	0.409

NOTE—The sections in Part 2 which apply to round wire give the practical maximum bare wire diameters for sizes 4 through 26 AWG, based on using only half of the bare wire diameter plus tolerance. The tolerances used in the full maximum diameters given above are in accordance with ASTM B3. See 1.4.9.1 for the conditions which should be met for use in the full tolerance. (This NOTE is classified as Authorized Engineering Information.)

Table 1-12
ROUND BARE WIRE, FINE SIZES BY RESISTANCE

AWG Size	Ohms at 20° C						AWG Size
	Minimum		Nominal		Maximum		
	Per Foot	Per Meter	Per Foot	Per Meter	Per Foot	Per Meter	
45	3.080	10.105	3.348	10.984	3.616	11.864	45
46	3.870	12.697	4.207	13.802	4.544	14.908	46
47	4.868	15.971	5.291	17.359	5.714	18.747	47
48	6.205	20.358	6.745	22.129	7.285	23.901	48
49	7.744	25.407	8.417	27.615	9.090	29.823	49
50	9.734	31.936	10.58	34.711	11.43	37.500	50
51	12.32	40.420	13.39	43.930	14.46	47.441	51
52	15.69	51.476	17.05	55.938	18.41	60.400	52
53	19.48	63.911	21.17	69.455	22.86	75.000	53
54	24.82	81.430	26.98	88.517	29.14	95.604	54
55	31.54	103.477	34.28	112.467	37.02	121.457	55
56	39.73	13 .348	43.19	141.699	46.64	153.018	56

Copyright National Electrical Manufacturers Association
Provided by IHS under license with NEMA
No reproduction or networking permitted without license from IHS
Not for Resale

DOUBLE POLYESTER GLASS FIBER COVERED, BARE OR FILM COATED, ROUND COPPER MAGNET WIRE THERMAL CLASS 155

INSULATING MATERIALS. The fiber covering shall consist of a combination of polyester and glass fibers. The glass fibers shall electrical grade continuous filament glass yarn. The polyester fiber shall be a high grade yarn resulting from the linear polymerization of ethylene glycol and terephthalic acid. The maximum content by weight of polyester fiber in the yarn shall not exceed 50 percent. If an underlying film coating is used, it shall have at least a Class 130 rating. The polyester glass fiber covering shall be wrapped firmly, closely, evenly, and continuously around the wire. Adjacent layers shall be wound in opposite directions. The polyester glass fiber covering shall be fused; when required it may be treated with an insulating varnish of compound to provide a tougher outer finish.

THERMAL CLASS. 155°C as defined in Part 3, para. 3.58.1.2.

GENERAL REQUIREMENTS. See Part 1.

Characteristics	Test Procedure, See Part 3, Paragraph	Requirements
1. DIMENSIONS	3.1.1.2	See Table D (MW 45-C)
2. ADHERENCE AND FLEXIBILITY	3.2.1.2.1	Covering shall not open sufficiently to expose the bare or underlying film-coated wire after bending 9 AWG and heavier wire on a 10d mandrel and 10 through 30 AWG wire on a 5d mandrel
	3.2.1.2.2	There shall be no loosening, fraying or loss of adherence of the covering except at the point of rupture
3. ELONGATION	3.3.1.2.2	Not less than the following:

AWG Size	Minimum Elongation, Percent
4–8	30.0
9–15	20.0
16–21	15.0
22–30	10.0

6. SPRINGBACK	3.6.2.1	Not greater than 5° for Glass Fiber Covered Bare Not greater than 5.5° for Glass Fiber Covered Film Coated	
7. DIELECTRIC STRENGTH	3.7.1.2.1	Not less than the following:	

AWG Size	Diameter of Mandrel, inches	Diameter of Mandrel, mm	Minimum Breakdown, Volts*
4/0–9	...	...	270
10–23	1.00	25.4	540
24–30	0.25	6.3	400

*For polyester glass fiber covered wire having an underlying film coating, add the minimum breakdown voltage given in Part 2 for the film-coated wire

Copyright National Electrical Manufacturers Association
Provided by IHS under license with NEMA
No reproduction or networking permitted without license from IHS
Not for Resale

DOUBLE POLYESTER GLASS FIBER COVERED, BARE OR FILM COATED,
ROUND COPPER MAGNET WIRE
THERMAL CLASS 155
Table D (MW 45-C)

AWG Size	Bare Wire Diameter, Inches†			Minimum Increase in Double Polyester-glass-fiber Covering, Inches†	Maximum Overall Diameter, Inches†			AWG Size
	Minimum	Nominal	Maximum		Bare	Single Film	Heavy Film	
4/0	0.4554	0.4600	0.4646	0.0060	0.4736	.....	.....	4/0
3/0	0.4055	0.4096	0.4137	0.0060	0.4227	.....	.....	3/0
2/0	0.3612	0.3648	0.3684	0.0060	0.3774	.....	.....	2/0
1/0	0.3217	0.3249	0.3281	0.0060	0.3371	.....	.....	1/0
1	0.2864	0.2893	0.2922	0.0060	0.3012	.....	.....	1
2	0.2550	0.2576	0.2602	0.0060	0.2692	.....	.....	2
3	0.2271	0.2294	0.2317	0.0060	0.2407	.....	.....	3
4	0.2023	0.2043	0.2053 *	0.0060	0.2153	.....	0.2188	4
5	0.1801	0.1819	0.1828 *	0.0060	0.1927	.....	0.1962	5
6	0.1604	0.1620	0.1628 *	0.0060	0.1726	.....	0.1761	6
7	0.1429	0.1443	0.1450 *	0.0060	0.1547	.....	0.1581	7
8	0.1272	0.1285	0.1292 *	0.0060	0.1388	.....	0.1422	8
9	0.1133	0.1144	0.1150 *	0.0060	0.1245	.....	0.1279	9
10	0.1009	0.1019	0.1024 *	0.0055	0.1109	.....	0.1141	10
11	0.0898	0.0907	0.0912 *	0.0055	0.0996	.....	0.1028	11
12	0.0800	0.0808	0.0812 *	0.0055	0.0896	.....	0.0927	12
13	0.0713	0.0720	0.0724 *	0.0055	0.0807	.....	0.0837	13
14	0.0635	0.0641	0.0644 *	0.0055	0.0727	0.0746	0.0762	14
15	0.0565	0.0571	0.0574 *	0.0055	0.0657	0.0674	0.0689	15
16	0.0503	0.0508	0.0511 *	0.0055	0.0593	0.0611	0.0625	16
17	0.0448	0.0453	0.0455 *	0.0055	0.0538	0.0555	0.0568	17
18	0.0399	0.0403	0.0405 *	0.0055	0.0487	0.0504	0.0517	18
19	0.0355	0.0359	0.0361 *	0.0055	0.0443	0.0459	0.0471	19
20	0.0317	0.0320	0.0322 *	0.0055	0.0403	0.0419	0.0431	20
21	0.0282	0.0285	0.0286 *	0.0055	0.0368	0.0383	0.0394	21
22	0.0250	0.0253	0.0254 *	0.0055	0.0336	0.0350	0.0361	22
23	0.0224	0.0226	0.0227 *	0.0055	0.0308	0.0323	0.0333	23
24	0.0199	0.0201	0.0202 *	0.0045	0.0268	0.0282	0.0292	24
25	0.0177	0.0179	0.0180 *	0.0045	0.0246	0.0259	0.0268	25
26	0.0157	0.0159	0.0160*	0.0045	0.0226	0.0238	0.0247	26
27	0.0141	0.0142	0.0143	0.0045	0.0208	0.0221	0.0229	27
28	0.0125	0.0126	0.0127	0.0045	0.0192	0.0205	0.0212	28
29	0.0112	0.0113	0.0114	0.0045	0.0179	0.0191	0.0198	29
30	0.0099	0.0100	0.0101	0.0045	0.0166	0.0177	0.0184	30

*This maximum bare wire diameter shall be permitted to be exceeded; see 1.4.9.1.
†For metric equivalent, see 1.5.
NOTE: For direct conversion inches to millimeters, multiply inches by the factor 25.4 (exact). (This note approved as Authorized Engineering Information 3-11-1987.)

Copyright National Electrical Manufacturers Association
Provided by IHS under license with NEMA
No reproduction or networking permitted without license from IHS
Not for Resale

AROMATIC POLYAMIDE PAPER COVERED RECTANGULAR AND SQUARE COPPER MAGNET WIRE THERMAL CLASS 220

INSULATING MATERIALS. The insulating material shall be an aromatic polyamide paper. The paper covering shall consist of one or more tapes, each wrapped firmly, closely, evenly, and continuously around the wire in a configuration necessary to provide the specified number of tape layers (thicknesses of paper). The paper covering shall consist of at least two thicknesses of paper with not less than 40-percent overlap. If an adhesive is used, this material shall perform in the applicable insulation system as required in Part 3, para. 3.58.1.2.

THERMAL CLASS. 220°C as defined in Part 3, para. 3.58.2.2.

GENERAL REQUIREMENTS. See Part 1.

Characteristics	Test Procedure, See Part 3, Paragraph	Requirements
1. DIMENSIONS	3.1.2.2	Rectangular Wire: a. Dimensions and radii—see Table 1-13 b. Thickness and width tolerances—see Table 1-14 c. Increase in thickness and width due to paper covering—see Table TW (MW 60-C). Square wire: Bare wire dimensions and tolerances, radii and increase in dimensions due to paper covering—see Tables SQ-2 (MW 60-C) for two thicknesses of paper and SQ-3 (MW 60-C) for three thickness of paper The increase in thickness for coverings having more than three thicknesses of paper shall be as follows: $\text{Minimum increase in thickness} = 2\left(\text{Number of paper thicknesses} - 1\right)\left(\text{Nominal tape thickness}\right)$ $\text{Maximum increase in thickness} = 2\left(\text{Number of paper thicknesses} + 1\right)\left(\text{Nominal tape thickness}\right)$
3. ELONGATION	3.3.2.2	Not less than 32 percent for thicknesses of 0.049 inch (1.25 mm and greater or 30 percent for thicknesses less than 0.049 inch (1.25 mm)
6. SPRINGBACK	3.6.2.1	Not greater than 5.5°
7. DIELECTRIC STRENGTH	3.7.2.2	Not less than 300 volts/mil (11800 v/mm) of the minimum thickness of the paper covering on one side (one half the minimum increase)
11. COVERAGE	3.11.2.2	Covering shall not loosen appreciably nor open sufficiently to expose the bare wire after bending around a mandrel having a diameter 6 times the thickness of the bare wire

Copyright National Electrical Manufacturers Association
Provided by IHS under license with NEMA
No reproduction or networking permitted without license from IHS
Not for Resale

AROMATIC POLYAMIDE PAPER COVERED RECTANGULAR AND SQUARE COPPER MAGNET WIRE THERMAL CLASS 220

Table TW (MW 60-C) Rectangular

Increase in Thickness Due to Aromatic polyamide paper Covering

Number of Thicknesses of Paper	Nominal Tape Thickness, 0.002 inch (0.051 mm) Increase in Thickness Minimum inches	mm	Maximum inches	mm	Nominal Tape Thickness, 0.003 inch (0.076 mm) Increase in Thickness Minimum inches	mm	Maximum inches	mm
2	0.004	0.102	0.012	0.305	0.006	0.152	0.018	0.457
3	0.008	0.203	0.016	0.406	0.012	0.305	0.024	0.610

NOTE I— The increase in width due to the paper covering shall be equal to or less than the increase in thickness.

NOTE II— The maximum increase in thickness or width due to the paper covering may be exceeded provided the overall dimension of the covered wire does not exceed the sum of the maximum thickness or width of the bare wire plus the maximum increase due to the paper covering.

NOTE III—The increase due to the paper covering for wires having dimensions not shown in Table 1-13 shall be the same as those for the next larger thickness or width.

Table SQ-2 (MW 60-C)

Minimum Increase and Maximum Overall Dimensions of Aromatic polyamide paper covered Bare Square Wire, Two Thicknesses of Aromatic polyamide Paper

Square AWG Size	Bare Wire Dimension Minimum inches	mm	Nominal inches	mm	Maximum inches	mm	Nominal Radii * inches	mm	Nominal Tape Thickness 0.002 inch (0.051 mm) Minimum Increase in Dimension inches	mm	Maximum Overall Dimension † inches	mm	Nominal Tape Thickness 0.003 inch (0.076 mm) Minimum Increase in Dimension inches	mm	Maximum Overall Dimension † inches	mm
0	0.3219	8.176	0.3249	8.252	0.3279	8.329	0.040	1.016	0.004	0.102	0.3399	8.633	0.006	0.152	0.3459	8.786
1	0.2864	7.275	0.2893	7.348	0.2922	7.422	0.040	1.016	0.004	0.102	0.3042	7.727	0.006	0.152	0.3102	7.879
2	0.2550	6.477	0.2576	6.543	0.2602	6.609	0.040	1.016	0.004	0.102	0.2722	6.914	0.006	0.152	0.2782	7.066
3	0.2271	5.768	0.2294	5.827	0.2317	5.885	0.040	1.016	0.004	0.102	0.2437	6.190	0.006	0.152	0.2497	6.342
4	0.2023	5.138	0.2043	5.189	0.2063	5.240	0.040	1.016	0.004	0.102	0.2183	5.545	0.006	0.152	0.2243	5.697
5	0.1801	4.575	0.1819	4.620	0.1837	4.666	0.040	1.016	0.004	0.102	0.1957	4.971	0.006	0.152	0.2017	5.123
6	0.1604	4.074	0.1620	4.115	0.1636	4.155	0.032	0.813	0.004	0.102	0.1756	4.460	0.006	0.152	0.1816	4.613
7	0.1429	3.630	0.1443	3.665	0.1457	3.701	0.032	0.813	0.004	0.102	0.1577	4.006	0.006	0.152	0.1637	4.158
8	0.1272	3.231	0.1285	3.264	0.1298	3.297	0.032	0.813	0.004	0.102	0.1418	3.602	0.006	0.152	0.1478	3.758
9	0.1133	2.878	0.1144	2.906	0.1155	2.934	0.026	0.660	0.004	0.102	0.1275	3.233	0.006	0.152	0.1335	3.391
10	0.1009	2.563	0.1019	2.588	0.1029	2.614	0.026	0.660	0.004	0.102	0.1149	2.918	0.006	0.152	0.1209	3.071
11	0.0897	2.278	0.0907	2.304	0.0917	2.329	0.020	0.508	0.004	0.102	0.1037	2.634	0.006	0.152	0.1097	2.786
12	0.0798	2.027	0.0808	2.052	0.0818	2.078	0.020	0.508	0.004	0.102	0.0938	2.383	0.006	0.152	0.0998	2.535
13	0.0710	1.803	0.0720	1.829	0.0730	1.854	0.016	0.406	0.004	0.102	0.0850	2.159	0.006	0.152	0.0910	2.311
14	0.0631	1.603	0.0641	1.628	0.0651	1.654	0.016	0.406	0.004	0.102	0.0771	1.958	0.006	0.152	0.0831	2.111

Table SQ-3 (MW 60-C)

Minimum Increase and Maximum Overall Dimensions of Aromatic polyamide paper covered Bare Square Wire, Three Thicknesses of Aromatic polyamide Paper

Square AWG Size	Bare Wire Dimensions Minimum inches	mm	Nominal inches	mm	Maximum inches	mm	Nominal Radii * inches	mm	Nominal Tape Thickness 0.002 inch (0.051 mm) Minimum Increase in Dimension inches	mm	Maximum Overall Dimension † inches	mm	Nominal Tape Thickness 0.003 inch (0.076 mm) Minimum Increase in Dimension inches	mm	Maximum Overall Dimension † inches	mm
0	0.3219	8.176	0.3249	8.252	0.3279	8.329	0.040	1.016	0.008	0.203	0.3439	8.735	0.012	0.305	0.3519	8.938
1	0.2864	7.275	0.2893	7.348	0.2922	7.422	0.040	1.016	0.008	0.203	0.3082	7.828	0.012	0.305	0.3162	8.031
2	0.2550	6.477	0.2576	6.543	0.2602	6.609	0.040	1.016	0.008	0.203	0.2762	7.015	0.012	0.305	0.2842	7.219
3	0.2271	5.768	0.2294	5.827	0.2317	5.885	0.040	1.016	0.008	0.203	0.2477	6.292	0.012	0.305	0.2557	6.495
4	0.2023	5.138	0.2043	5.189	0.2063	5.240	0.040	1.016	0.008	0.203	0.2223	5.645	0.012	0.305	0.2303	5.850
5	0.1801	4.575	0.1819	4.620	0.1837	4.666	0.040	1.016	0.008	0.203	0.1997	5.072	0.012	0.305	0.2077	5.276
6	0.1604	4.074	0.1620	4.115	0.1636	4.155	0.032	0.813	0.008	0.203	0.1796	4.562	0.012	0.305	0.1876	4.765
7	0.1429	3.630	0.1443	3.665	0.1457	3.701	0.032	0.813	0.008	0.203	0.1617	4.107	0.012	0.305	0.1697	4.310
8	0.1272	3.231	0.1285	3.264	0.1298	3.297	0.032	0.813	0.008	0.203	0.1458	3.703	0.012	0.305	0.1538	3.907
9	0.1133	2.878	0.1144	2.906	0.1155	2.934	0.026	0.660	0.008	0.203	0.1315	3.340	0.012	0.305	0.1395	3.543
10	0.1009	2.563	0.1019	2.588	0.1029	2.614	0.026	0.660	0.008	0.203	0.1189	3.020	0.012	0.305	0.1269	3.223
11	0.0897	2.278	0.0907	2.304	0.0917	2.329	0.020	0.508	0.008	0.203	0.1077	2.736	0.012	0.305	0.1157	2.939
12	0.0798	2.027	0.0808	2.052	0.0818	2.078	0.020	0.508	0.008	0.203	0.0978	2.484	0.012	0.305	0.1058	2.687
13	0.0710	1.803	0.0720	1.829	0.0730	1.854	0.016	0.406	0.008	0.203	0.0890	2.261	0.012	0.305	0.0970	2.464
14	0.0631	1.603	0.0641	1.628	0.0651	1.654	0.016	0.406	0.008	0.203	0.0811	2.060	0.012	0.305	0.0891	2.263

* Radii tolerance is plus or minus 25 percent.

† The maximum overall dimensions have been calculated in accordance with the following:

AWG Size	Maximum Increase Due to Two Thicknesses of Paper Tape Thickness 0.002 inch (0.051 mm)	Tape Thickness 0.003 inch (0.076 mm)	Maximum Increase Due to Three Thicknesses of Paper Tape Thickness 0.002 inch (0.051 mm)	Tape Thickness 0.003 inch (0.076 mm)
0-14	0.012 inch (0.305 mm)	0.018 inch (0.457 mm)	0.016 inch (0.406 mm)	0.024 inch (0.610 mm)

NOTE— The increase due to the paper covering for wires having dimensions not shown shall be the same as for the next larger size.

NOTE: For direct conversion inches to millimeters, multiply inches by the factor 25.4 (exact). (This note approved as Authorized Engineering Information 3-11-1987.)

Copyright National Electrical Manufacturers Association
Provided by IHS under license with NEMA
No reproduction or networking permitted without license from IHS
Not for Resale

AROMATIC POLYAMIDE PAPER COVERED ROUND ALUMINUM MAGNET WIRE THERMAL CLASS 220

INSULATING MATERIALS. The insulating material shall be an aromatic polyamide paper. The paper covering shall consist of one or more tapes, each wrapped firmly, closely, evenly, and continuously around the wire in a configuration necessary to provide the specified number of tape layers (thicknesses of paper). The paper covering shall consist of at least two thicknesses of paper with not less than 40-percent overlap. If an adhesive is used, this material shall perform in the applicable insulation system as required in Part 3, para. 3.58.1.2.

THERMAL CLASS. 220°C as defined in Part 3, para. 3.58.1.2.

GENERAL REQUIREMENTS. See Part 1.

Characteristics	Test Procedure, See Part 3, Paragraph	Requirements
1. DIMENSIONS	3.1.1.2	See Tables 2 and 3 (MW 61-C) for wire having two and three thicknesses of paper, respectively. The increase in diameter for coverings having more than three thicknesses of paper shall be as specified below: $\text{Minimum increase in diameter} = 2\left(\text{Number of paper thicknesses} - 1\right)\left(\text{Nominal tape thickness}\right)$ $\text{Maximum increase in diameter} = 2\left(\text{Number of paper thicknesses} + 1\right)\left(\text{Nominal tape thickness}\right)$
2. ADHERENCE AND FLEXIBILITY	3.2.1.2.1	Covering shall not open sufficiently to expose the bare wire, nor shall the covering show any tearing
	3.2.1.2.2	Covering shall not open sufficiently to expose the bare wire, nor shall it be possible to slide the paper along the wire
3. ELONGATION	3.3.1.2	Not less than the following:
6. SPRINGBACK	3.6.2.1	Not greater than 5.5°
7. DIELECTRIC STRENGTH	3.7.1.2	Not less than 300 volts/mil (11800 v/mm) of the minimum thickness of the paper covering on one side (one half the minimum increase)
11. COVERAGE	3.11.1.2	Covering shall not loosen appreciably nor open sufficiently to expose the bare wire after bending on a 6d mandrel

AWG Size	Minimum Elongation, Percent
4/0–0	35
1–9	30

Copyright National Electrical Manufacturers Association
Provided by IHS under license with NEMA
No reproduction or networking permitted without license from IHS
Not for Resale

AROMATIC POLYAMIDE PAPER COVERED ROUND COPPER MAGNET WIRE THERMAL CLASS 220

Table 2 (MW 61-C)

Two Thicknesses of Aromatic polyamide Paper

AWG Size	Bare Wire Diameter, Inches†			Nominal Tape Thickness 0.002 inch (0.051 mm)				Nominal Tape Thickness 0.003 inch (0.076 mm)				AWG Size
				Minimum Increase in Diameter		Maximum Overall Diameter ‡		Minimum Increase in Diameter		Maximum Overall Diameter ‡		
	Minimum	Nominal	Maximum	inches	mm	inches	mm	inches	mm	inches	mm	
4/0	0.4554	0.4600	0.4646	0.0040	0.102	0.4766	12.106	0.0060	0.152	0.4826	12.258	4/0
3/0	0.4055	0.4096	0.4137	0.0040	0.102	0.4257	10.813	0.0060	0.152	0.4317	10.965	3/0
2/0	0.3612	0.3648	0.3684	0.0040	0.102	0.3804	9.662	0.0060	0.152	0.3864	9.815	2/0
1/0	0.3217	0.3249	0.3281	0.0040	0.102	0.3401	8.639	0.0060	0.152	0.3461	8.791	1/0
1	0.2864	0.2893	0.2922	0.0040	0.102	0.3042	7.727	0.0060	0.152	0.3102	7.897	1
2	0.2550	0.2576	0.2602	0.0040	0.102	0.2722	6.914	0.0060	0.152	0.2782	7.066	2
3	0.2271	0.2294	0.2317	0.0040	0.102	0.2437	6.190	0.0060	0.152	0.2497	6.342	3
4	0.2023	0.2043	0.2053*	0.0040	0.102	0.2173	5.519	0.0060	0.152	0.2233	5.672	4
5	0.1801	0.1819	0.1828*	0.0040	0.102	0.1948	4.948	0.0060	0.152	0.2008	5.100	5
6	0.1604	0.1620	0.1628*	0.0040	0.102	0.1748	4.440	0.0060	0.152	0.1808	4.592	6
7	0.1429	0.1443	0.1450*	0.0040	0.102	0.1570	3.988	0.0060	0.152	0.1630	4.140	7
8	0.1272	0.1285	0.1292*	0.0040	0.102	0.1412	3.586	0.0060	0.152	0.1472	3.739	8
9	0.1133	0.1144	0.1150*	0.0040	0.102	0.1270	3.226	0.0060	0.152	0.1330	3.378	9

NOTE: For direct conversion inches to millimeters, multiply inches by the factor 25.4 (exact). (This note approved as Authorized Engineering Information 3-11-1987.)

Table 3 (MW 61-C)

Dimensions—Sizes 4/0 to 9 AWG
Three Thicknesses of Aromatic polyamide Paper

AWG Size	Bare Wire Diameter, Inches†			Nominal Tape Thickness 0.002 inch (0.051 mm)				Nominal Tape Thickness 0.003 inch (0.076 mm)				AWG Size
				Minimum Increase in Diameter		Maximum Overall Diameter ‡		Minimum Increase in Diameter		Maximum Overall Diameter ‡		
	Minimum	Nominal	Maximum	inches	mm	inches	mm	inches	mm	inches	mm	
4/0	0.4554	0.4600	0.4646	0.0080	0.203	0.4806	12.207	0.0120	0.305	0.4886	12.410	4/0
3/0	0.4055	0.4096	0.4137	0.0080	0.203	0.4297	10.914	0.0120	0.305	0.4377	11.118	3/0
2/0	0.3612	0.3648	0.3684	0.0080	0.203	0.3844	9.764	0.0120	0.305	0.3924	9.967	2/0
1/0	0.3217	0.3249	0.3281	0.0080	0.203	0.3441	8.740	0.0120	0.305	0.3521	8.943	1/0
1	0.2864	0.2893	0.2922	0.0080	0.203	0.3082	7.828	0.0120	0.305	0.3162	8.031	1
2	0.2550	0.2576	0.2602	0.0080	0.203	0.2762	7.015	0.0120	0.305	0.2842	7.219	2
3	0.2271	0.2294	0.2317	0.0080	0.203	0.2477	6.292	0.0120	0.305	0.2557	6.495	3
4	0.2023	0.2043	0.2053*	0.0080	0.203	0.2213	5.621	0.0120	0.305	0.2293	5.824	4
5	0.1801	0.1819	0.1828*	0.0080	0.203	0.1988	5.050	0.0120	0.305	0.2068	5.253	5
6	0.1604	0.1620	0.1628*	0.0080	0.203	0.1788	4.542	0.0120	0.305	0.1868	4.745	6
7	0.1429	0.1443	0.1450*	0.0080	0.203	0.1610	4.089	0.0120	0.305	0.1690	4.293	7
8	0.1272	0.1285	0.1292*	0.0080	0.203	0.1452	3.688	0.0120	0.305	0.1532	3.891	8
9	0.1133	0.1144	0.1150*	0.0080	0.203	0.1310	3.327	0.0120	0.305	0.1390	3.531	9

*This maximum bare wire diameter shall be permitted to be exceeded; see 1.4.9.1.

† For metric equivalents, see Part 1, par. 5.

‡ The maximum overall diameters have been calculated in accordance with the following:

AWG Size	Maximum Increase Due to Two Thicknesses of Paper		Maximum Increase Due to Three Thicknesses of Paper	
	Tape Thickness	Tape Thickness	Tape Thickness	Tape Thickness
	0.002 inch (0.051 mm)	0.003 inch (0.176 mm)	0.002 inch (0.051 mm)	0.003 inch (0.076 mm)
4/0-9	0.012 inch (0.305 mm)	0.018 inch (0.457 mm)	0.016 inch (0.406 mm)	0.024 inch (0.610 mm)

NOTE: For direct conversion inches to millimeters, multiply inches by the factor 25.4 (exact). (This note approved as Authorized Engineering Information 3-11-1987.)

Copyright National Electrical Manufacturers Association
Provided by IHS under license with NEMA
No reproduction or networking permitted without license from IHS
Not for Resale

Table 3-2
ELONGATION AND MANDREL DIAMETERS

AWG Size	Elongation Rate	Minimum Elongation, Percent	Mandrel Diameter	Examined With
4–9	12″ ± 1″ per minute‡	30	None	Normal vision
10–13	12″ ± 1″ per minute‡	25	5d	Normal vision
14–20	Sudden jerk	20	3d	Normal vision
21–30	Sudden jerk	15	1d	Normal vision
31–44	Sudden jerk	20†	3d	6X–10X magnification
45–56	Sudden jerk	Breaking point	None	10X–15X magnification
Aluminum				
4–9	12″ ± 1″ per minute‡	15	None	Normal vision
10–15	12″ ± 1″ per minute‡	15	5d	Normal vision
16–20	Sudden jerk	15†	3d	Normal vision
21–25	Sudden jerk	10†	3d	Normal vision

†Or to its breaking point, whichever is less. ‡300 mm ± 25 mm per minute.

3.2.1.2.3 PAPER COVERED

A specimen having an effective length of 10 inches (250 mm) shall be elongated to the values shown in Table 3-3 at a rate of 12 inches ± 1 inch (300 mm ± 25 mm) per minute. The specimen shall be examined with normal vision.

Table 3-3
ELONGATION

AWG Size	Minimum Elongation, Percent
8–13	15
14–22	10
23–32	8

3.2.2 Rectangular Wire

3.2.2.1 FILM COATED

A specimen having an effective length of 10 inches (250 mm) shall be elongated 30 percent for copper, 15 percent for aluminum, at a rate of 12 inches ± 1 inch (300 mm ± 25 mm) per minute. The specimen shall be examined with normal vision.

3.2.2.2 FIBROUS COVERED

3.2.2.2.1 WITHOUT UNDERLYING FILM COATING

A specimen shall be wound flatwise 180 degrees around a mandrel having a diameter of 10 times the thickness of the bare wire, and the bent portion shall be buried in lead, nickel or nickel-plated shot, 0.080 to 0.110 inch in diameter (2.0 mm to 2.8 mm). A source of 60-hertz voltage of a substantially sinusoidal wave form shall be applied between the conductor and the shot.

3.2.2.2.2 WITH UNDERLYING FILM COATING

A specimen having an effective length of 10 inches (250 mm) shall be elongated 20 percent at a rate of 12 inches ± 1 inch (300 mm ± 25 mm) per minute. The specimen shall be examined with normal vision.

3.3 ELONGATION

For rectangular and round magnet wire larger than 14 AWG, testing shall be by either the Springback Test in accordance with 3.6.2 or the Elongation Test in the following manner:

3.3.1 Round Wire

3.3.1.1 FILM COATED

A specimen having an effective length of 10 inches (250 mm) shall be elongated to its breaking point at a rate of 12 inches ± 1 inch (300 mm ± 25 mm) per minute. (See Figure 3-1.) The gripping jaws shall be such that a break will not occur within ¼ inch (6 mm) of either jaw. The travel distance of the jaw at the instant of break shall be noted and the percentage of elongation calculated.

3.3.1.2 FIBROUS COVERED

3.3.1.2.1 GLASS FIBER COVERED

The wire shall be tested in accordance with 3.3.1.1. In case of failure of glass fiber covered wire sizes 21 AWG and larger, the fibrous covering shall be removed from another specimen and the wire tested. On sizes 22 AWG and smaller, the fibrous covering shall be removed from the specimen prior to testing.

3.3.1.2.2 POLYESTER GLASS FIBER COVERED

The wire shall be tested in accordance with 3.3.1.1.

Copyright National Electrical Manufacturers Association
Provided by IHS under license with NEMA
No reproduction or networking permitted without license from IHS
Not for Resale

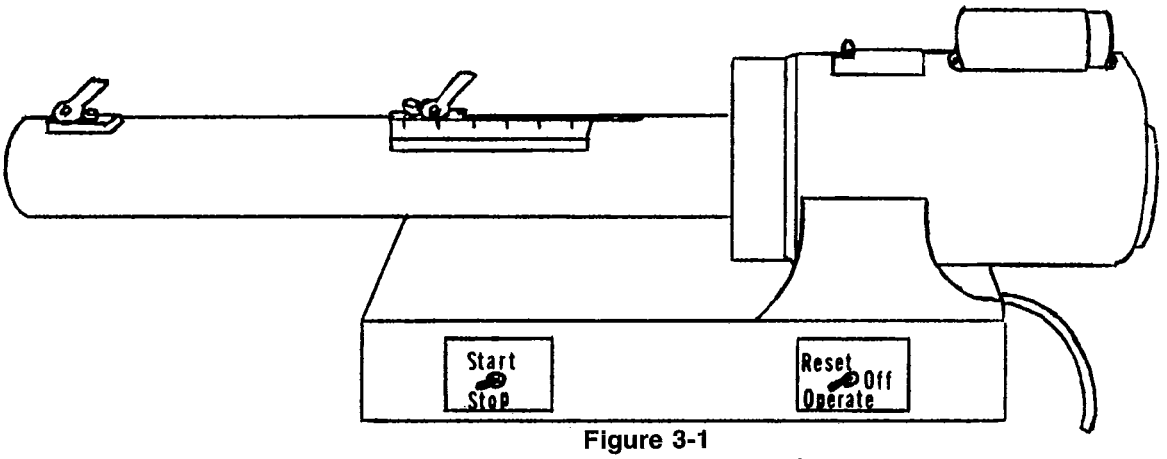

Figure 3-1
MACHINE FOR ELONGATION

3.3.1.2.3 PAPER COVERED

The wire shall be tested in accordance with 3.3.1.1.

3.3.1.2.4 COTTON, SILK, OR NYLON COVERED

After the fibrous covering has been carefully removed, the specimen shall be tested in accordance with 3.3.1.1.

3.3.2 Rectangular Wire

3.3.2.1 FILM COATED

The wire shall be tested in accordance with 3.3.1.1.

3.3.2.2 FIBROUS COVERED

3.3.2.2.1 GLASS OR POLYESTER GLASS COVERED

The wire shall be tested in accordance with 3.3.1.1.

3.3.2.2.2 PAPER OR PAPER AND COTTON COVERED

After the covering has been carefully removed, the specimen shall be tested in accordance with 3.3.1.1.

3.4 HEAT SHOCK

3.4.1 Round Wire

3.4.1.1 FILM COATED

A specimen having an effective length of 10 inches (250 mm) shall be elongated at the rate given and wound not more than ten turns around a mandrel having the diameter given in Table 3-4. The specimen shall be removed from the mandrel and placed in a circulating air oven for ½ hour at not less than the temperature specified in Part 2. The specimen shall be allowed to cool to room temperature and shall then be examined in accordance with Table 3-4.

3.4.2 Rectangular Wire

3.4.2.1 FILM COATED

A specimen having an effective length of 10 inches (250 mm) shall be elongated at a rate of 12 inches ± 1 inch (300 mm ± 25 mm) per minute to the percent specified in Part 2 and placed in a circulating air oven at not less than the temperature specified in Part 2 for ½ hour. The specimen shall be allowed to cool to room temperature and shall then be examined with normal vision.

Table 3-4
ELONGATION AND MANDREL DIAMETERS

AWG Size	Elongation Rate	Minimum Elongation, Percent	Mandrel Diameter	Examined With
Copper				
4–9	12″ ± 1″ per minute‡	30	None	Normal vision
10–13	12″ ± 1″ per minute‡	25	5d	Normal vision
14–30	Sudden jerk	20	3d	Normal vision
31–44	Sudden jerk	20†	3d	6X–10X magnification
Aluminum				
4–9	12″ ± 1″ per minute‡	15	None	Normal vision
10–15	12″ ± 1″ per minute‡	15	5d	Normal vision
16–20	Sudden jerk	15†	3d	Normal vision
21–25	Sudden jerk	10†	3d	Normal vision

†Or to its breaking point, whichever is less.
‡300 mm ± 25 mm per minute.

Copyright National Electrical Manufacturers Association
Provided by IHS under license with NEMA
No reproduction or networking permitted without license from IHS
Not for Resale

NEMA MW*1000 87 ■ 6470247 0020610 7 ■

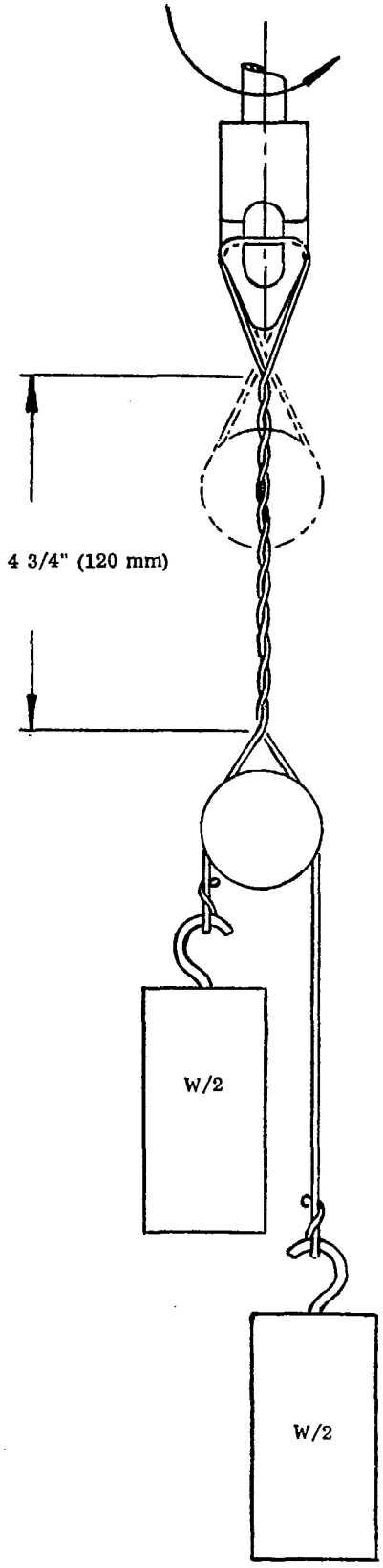

Figure 3-3
SERVED WIRE SPECIMEN WINDER

3. *Sizes 10 AWG and Smaller—Layer Test*
Two specimens shall be wound, one on top of the other, for a distance of approximately 1 inch (25 mm) on a smooth mandrel of insulating material. The diameter of the mandrel shall be in accordance with Part 2. The ends of each of the windings shall be secured in such a manner that the two layers are maintained in intimate contact and there is no loosening of the convolutions. The specimens shall be tested in accordance with 3.7.1.1.3.

3.7.1.2.2 PAPER COVERED

1. *Sizes 9 AWG and Larger*
Specimens shall be prepared and tested in accordance with 3.7.1.1.1 and 3.7.1.1.3.
2. *Sizes 10 AWG and Smaller*
Specimens shall be prepared and tested in accordance with 3.7.1.2.1, item 3.

3.7.2 Rectangular Wire

3.7.2.1 FILM COATED

Specimens shall be prepared and tested in accordance with 3.7.1.1.1 and 3.7.1.1.3. The breakdown voltage in at least three of the four locations where the electrodes are applied to the test specimen, shall be not less than the values specified in individual Sections in Part 2.

3.7.2.2 FIBROUS COVERED

Specimens shall be prepared and tested in accordance with 3.7.1.1.1 and 3.7.1.1.3. The breakdown voltage in at least three of the four locations where the electrodes are applied to the test specimen, shall be not less than the values specified in individual Sections in Part 2.

3.8 CONTINUITY

3.8.1 Round Wire

3.8.1.1 FILM COATED

3.8.1.1.1 HIGH-VOLTAGE DIRECT-CURRENT CONTINUITY—SIZES 14 THROUGH 44 (1.628 THROUGH 0.051 MM NOMINAL CONDUCTOR DIAMETER)

One hundred feet (30.5 mm) of film-coated wire shall be passed over two energized stainless steel, freely rotating "V" grooved electrode sheaves at a speed of 60 ± 3 feet (18 ± 1 m) per minute. A grounded freely rotating metallic guide sheave shall be used before and after the electrode sheaves. The conductor shall be electrically grounded by means of either a ground terminal or a

Copyright National Electrical Manufacturers Association
Provided by IHS under license with NEMA
No reproduction or networking permitted without license from IHS
Not for Resale

grounded take-up drum. Pay-off equipment shall be designed to prevent damage to the wire under test. The open-circuit test voltage maintained between the energized (positive polarity) electrode sheaves and the grounded conductor shall be as indicated in Table 3-7.

Table 3-7
TEST VOLTAGE
(dc volts ±5%)

AWG Size	Single	Heavy	Triple
Copper			
14–24	1000	1500	2000
25–30	750	1000	1500
31–35	500	750	—
36–44	350	500	—
Aluminum			
14–24	500	1500	—

The high-voltage power supply shall be regulated and shall provide to the electrode sheaves a smooth filtered direct-current voltage free of transient over-voltage "spikes." All voltage settings shall be checked with a high-impedance device, such as an electrostatic voltmeter. Sufficient internal resistance shall be provided so that rapid collapse of the applied test voltage occurs when a fault is detected. Rapid recovery of the voltage to the test level is also required.

The steady-state short-circuit current shall be limited internally to 25 ± 5 microamperes at any test voltage setting. A 50-megohm fault resistance at the electrode sheaves shall not cause more than a 75-percent drop in voltage of the high-voltage electrode sheaves at any voltage setting.

The sensitivity of the fault detection circuit shall be such that the threshold fault current will be as shown in Table 3-8, with a tolerance of ±10 percent. The speed of response of the fault circuit shall be 4 to 6 milliseconds. The fault circuit shall be designed to repeat at the rate of 450 ± 45 counts per minute when bare wire is passed over the electrode sheaves.

Table 3-8
THRESHOLD FAULT CURRENT

dc Test Voltage, Volts	Threshold Fault Current Microamperes, ±10%
3000	16
2500	14
2000	12
1500	10
1000	8
750	7
500	6
350	5

The fault counter shall be a digital readout device such as an electromechanical counter or its electronic equivalent. Means for resetting the counter to zero shall be included. Additional recorder equipment for making records of fault patterns is optional.

For sizes 14 through 24 AWG, dual high voltage electrode sheaves shall be constructed of stainless steel with an outside diameter of 1.69 inches (43 mm), with a "V" groove such that the included angle will be 90 ± 3° and the root diameter 1.5 + 0, −0.01 inch (38 + 0, −0.25 mm).

The electrode sheaves' centers shall be separated by 1.81 ± 0.005 inches (46 ± 0.13 mm).

The electrode sheave shall have a contact length of 1.0 + 0, −0.1 inch (25.4 mm + 0, −2.5 mm). The electrode sheaves shall be placed between two grounded guide sheaves and on a line offset 42 ± 3° from a line intersecting the center of the guide sheaves. The two grounded guide sheaves shall be of the same material, and their centers shall be spaced 5.50 inches (140 mm) apart on a horizontal line. These grounded sheaves shall be constructed with an outside diameter of 2 inches (51 mm), with a "V" groove such that the included angle will be 45 ± 3° and the root diameter 1.5 ± 0.01 inch (38 ± 0.25 mm). (See Figure 3-3a.)

For sizes 31 through 44 AWG, smaller dual electrode sheaves shall replace the electrode sheaves described above. These electrode sheaves shall be made of stainless steel and shall have an outside diameter of 1.13 ± 0.01 inch (28.7 ± 0.25 mm) and a "V" shaped groove such that the included angle will be 90 ± 3° and the root diameter will be 1.00 + 0, −0.01 inch (25.4 + 0, −0.25 mm). The centers of the dual electrode sheaves shall be separated by 1.25 ± 0.005 inch (32 ± 0.13 mm). The dual electrode sheaves will be adjusted to an angle resulting in 1.0 ± 0.1 inch (25.4 ± 2.5 mm) wire contact with each electrode sheave. (See Figure 3-3b.)

For sizes 25 through 30 AWG, either pair of high-voltage dual electrode sheaves, described above, shall be used.

The ground insulation for the electrode sheaves shall be a high-resistivity material, nonhygroscopic, and easily cleaned, and shall be so dimensioned as to support a minimum of 3000 volts direct current indefinitely. All edges of the electrode sheaves shall be well rounded to minimize corona.

A surge damping resistor of 4.7 megohms ± 10 percent shall be installed in the high-voltage line at the electrode sheaves connection. No shielding shall be used on the high-voltage lead since a minimum capacitance to ground is sought during switching and counting events.

The test device shall include such wire handling equipment as will provide the wire speed stipulated and shall be capable of handling wire sizes 14 through 44 AWG. A length indicator with a preset shut-off feature shall be included so that exact lengths can be monitored. The drive

Copyright National Electrical Manufacturers Association
Provided by IHS under license with NEMA
No reproduction or networking permitted without license from IHS
Not for Resale

A 60/40 tin-lead solder conforming to ASTM B-32, Grade B shall be used for all tests. Any dross which forms must be removed from the surface of the solder before each test.

The specimen prepared for test shall be immersed vertically to a depth of 1¼ inches (32 mm) at the center of the solder pot for the time equal to or less than indicated in Part 2. After removal from the pot, the lower ½ inch (13 mm) of the segment immersed in the pot shall be examined under 6X to 10X magnification.

3.12.1.1.2 SIZES 37 THROUGH 56 AWG

A specimen of wire shall be supported by means of a fixture as shown in Figure 3-5a. The specimen and fixture so prepared shall be tested in accordance with 3.12.1.1.1. Visual examination of the lower ½ inch (13 mm) of the vertical portions of the specimen shall be made under 15X magnification.

3.12.1.1.3 RETEST CLAUSE

In the event the solder time as tested above does not meet the requirements of Part 2, a new specimen shall be dipped in a suitable rosin-alcohol flux (10 parts of Grade WW water white rosin mixed with 90 parts of denatured ethyl alcohol by weight) prior to immersion into the molten solder.

3.12.1.1.4 ADEQUATE VENTILATION

During solderability testing a hazard exists in the form of volatilized tin or lead, and some decomposition by-products of the various solderable insulations. Adequate ventilation or forced exhausting of solder pot vapors, or both, is strongly advised to protect personnel conducting the tests. (This paragraph is classified as Authorized Engineering Information.)

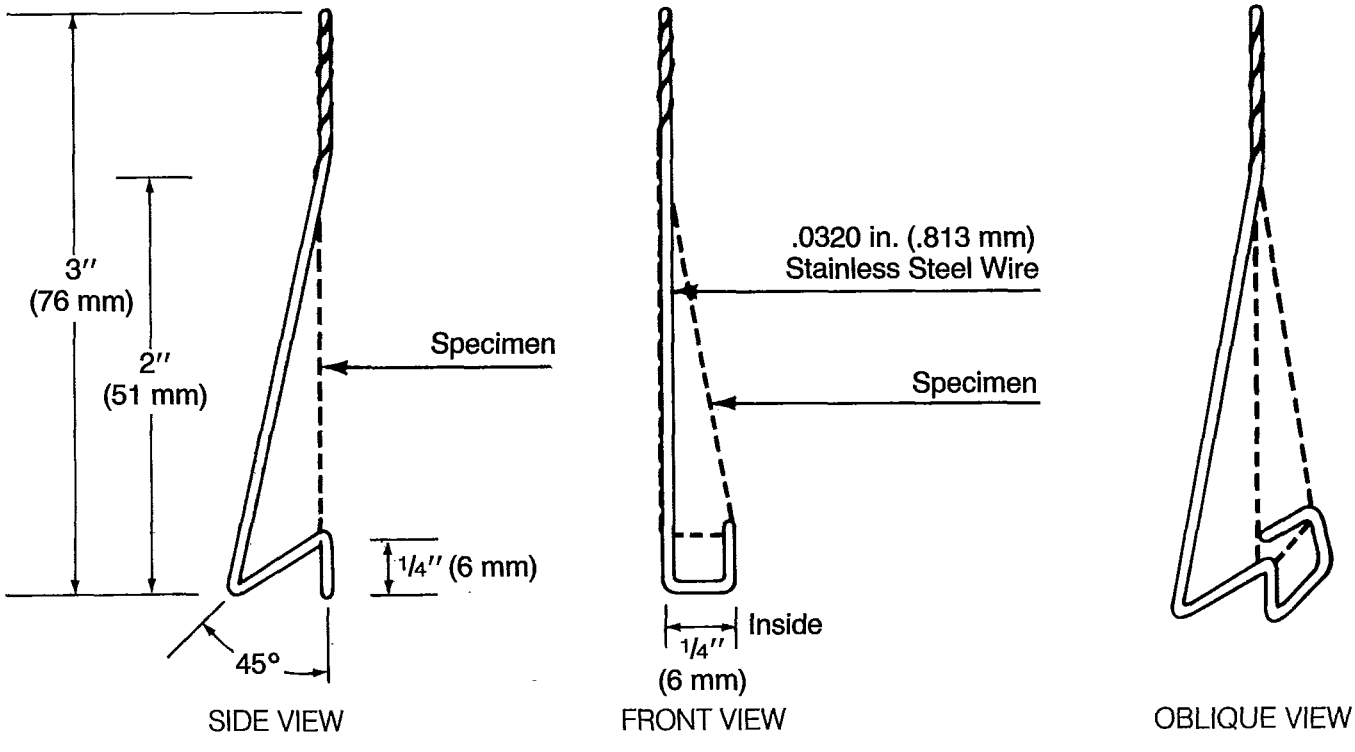

Figure 3-5a
SOLDERABILITY TEST SPECIMEN HOLDER FOR 37 THROUGH 56 AWG

Copyright National Electrical Manufacturers Association
Provided by IHS under license with NEMA
No reproduction or networking permitted without license from IHS
Not for Resale

PERIODIC CONFORMANCE TESTS

3.50 THERMOPLASTIC FLOW

3.50.1 Round Wire

3.50.1.1 FILM COATED

3.50.1.1.1 APPARATUS

The thermoplastic flow tester shall be capable of exerting a constant load perpendicular to, and directly over, the right-angle crossover of the specimen. The tester shall include a control thermocouple of suitable temperature range and a pyrometer to indicate the temperature measured by the control thermocouple. The actual specimen temperature at each test position under the load at the crossover position shall be measured throughout the expected temperature range by a calibrated thermocouple-pyrometer and compared to the control or indicated temperature. The resulting temperature differences shall be used to appropriately correct the indicated thermoplastic flow temperature. The testing chamber shall be of suitable size to maintain a temperature rise at a rate of 10 °C (18 °F) to 45 °C (81 °F) per minute to not less than 50 °C (90 °F) below the temperature specified in Part 2 and 5 °C (9 °F) per minute temperature rise from that point to failure. The failure detector shall be so constructed that a current flow of 20 ± 10 milliamperes at 115 volts 60 hertz between the crossed wires of the specimen will indicate failure.

3.50.1.1.2 PROCEDURE

The specimen shall consist of two lengths of wire positioned at right angles to each other in the apparatus. The specimen shall be carefully loaded with 2000 grams (19.6N) for 18 AWG or 250 grams (2.45N) for 36 AWG wire. The temperature shall be increased at 10° (18 °F) to 45 °C (81 °F) per minute until 55 ± 5 °C (99 ± 9 °F) below the thermoplastic flow temperature specified in Part 2 is attained and then raised 5 ± 1 °C (9 ± 2 °F) per minute until failure of the specimen occurs. The indicated temperature, corrected in accordance with 3.50.1.1.1, shall be taken as the thermoplastic flow temperature of that specimen. For 18 AWG wire, five specimens shall be tested per sample, and the median (the third highest value) shall be the thermoplastic flow temperature. For 36 AWG wire, nine specimens shall be tested per sample, and the median (the fifth highest value) shall be the thermoplastic flow temperature.

3.50.2 Rectangular Wire

3.50.2.1 FILM COATED

Heavy film coated 18 AWG round wire shall be tested in accordance with 3.50.1 to provide a periodic conformance value for rectangular wire.

3.51 SOLUBILITY

3.51.1 Round Wire

3.51.1.1 FILM COATED

3.51.1.1.1 PREPARATION OF SPECIMENS—SIZES 18 AND 36 AWG

Specimens of unstretched and unbent film coated wire, each 12 inches (300 mm) long, which have been stress annealed for 10 minutes at 150 ± 3 °C (302 ± 5 °F) shall be immersed for at least 6 inches (150 mm), without bending, for 30 minutes in the liquids specified in Part 2 and maintained at 60 ± 2 °C (140 ± 4 °F). Each specimen shall be immersed in one liquid only.

3.51.1.1.2 NEEDLE SCRAPE—SIZE 18 AWG

The specimens shall then be removed from the solvent and tested within 2 minutes, but not less than 1 minute, on a device which scrapes the surface of the film coating at right angles to the length of the wire with a 0.016 inch (0.406 mm) diameter steel needle loaded with 580 grams (5.7N) when testing copper wire and 340 grams (3.33N) when testing aluminum wire. (See Figure 3-6). The specimens shall be wiped with a clean cloth or tissue to remove any liquid and shall be straightened by hand, without stretching, to remove kinks. After the wire is inserted in the test apparatus, the weighted needle shall be lowered gently to the surface of the film coating and the wire scraped at 2 inches (50 mm) per second along the portion that was immersed. Exposure of the bare conductor shall be indicated by an electrical circuit having a potential of 7.5 ± 1.5 volts between the needle and the conductor.

3.51.1.1.3 CHEESECLOTH WIPE—SIZE 36 AWG

The specimens shall then be removed from the solvent and, within 2 minutes but not less than 1 minute, drawn once between the folds of four thicknesses of cheesecloth pressed firmly between the forefinger and the ball of the thumb. Any removal of the coating caused by kinks or mechanical injury shall not be considered as failure to meet the requirements of Part 2.

3.51.2 Rectangular Wire

3.51.2.1 FILM COATED

Specimens of unstretched and unbent film coated wire, each 12 inches (300 mm) long, which have been stress annealed at 150± 3 °C (302 ± 5 °F) shall be immersed at least 6 inches (150 mm), without bending, for 30 minutes in the liquids specified in Part 2 and maintained at 60 ± 2 °C, (140 ± 4 °F). Each specimen shall be immersed in one liquid only. The specimens shall then be tested in accordance with 3.51.1.1.3.

Copyright National Electrical Manufacturers Association
Provided by IHS under license with NEMA
No reproduction or networking permitted without license from IHS
Not for Resale