NEMA Standards Publication No. MG 1-1993

MOTORS AND GENERATORS

Revision No. 2, April, 1995

Published by

National Electrical Manufacturers Association
2101 L Street, N.W.
Washington, DC 20037

©1995 by National Electrical Manufacturers Association

Copyright National Electrical Manufacturers Association
Provided by IHS under license with NEMA
No reproduction or networking permitted without license from IHS

Not for Resale

MG 1-1993, Revision 2

List of Effective Pages

Pages with a revision number of 0 are originals. Pages with a revision number of 1 were altered in revision 1. Pages with a revision number of 2 were altered in revision 2. Parts of text marked with a triangle were changed from previous versions.

Page Number	Revision Number
Table of Contents	2
i	1
Part 1	
1	0
2	0
3	0
4	0
5	1
6	1
7	1
8	1
9	1
10	1
11	1
12	2
13	1
14	1
15	1
16	1
17	1
18	1
SSFD 1	1
SSFD 2	1
SSFD 3	1
SSFD 4	1
Part 2	
1	0
2	0
3	0
4	0
5	0
6	0
7	0
8	0
9	0
10	0
11	0
12	0
13	0
14	0
15	0
16	0
17	0
18	0
19	0
20	0
21	0
22	2
23	0
24	0
25	1
26	1
27	0
Part 3	
1	0
2	0
Part 4	
1	2
2	2
3	2
4	2
5	0
6	0
7	0
8	0
9	0
10	0
11	0
12	0
13	0
14	0
15	0
Part 5	
1	0
2	0
3	0
4	0
5	0
6	0
7	0
8	0
9	0
10	0
11	0
12	0
13	0
14	0
15	0
16	0
17	0
Part 6	
1	1
2	1
3	1
4	1
5	1
6	1
7	1
8	1
9	1
10	1
Part 7	
1	1
2	1
3	1
4	1
5	1
6	1
7	1
8	1
Part 10	
1	0
2	0
3	0
4	0
5	1
6	2
7	2
8	2
9	0
10	0
11	1
12	1
Part 11	
1	0
2	0
3	0
4	0
5	1
6	1
7	1
8	1
9	1
10	1
11	2
12	1
13	0
14	0
15	0
16	0
17	0
18	0
19	1
20	0
21	0
22	0
Part 12	
1	0
2	0
3	2
4	2
5	0
6	0
7	1
8	1
9	2
10	1
11	1
12	1
13	1
14	2
15	1
16	1
17	1
18	1
19	2
20	1
21	1
22	1
23	1

Copyright National Electrical Manufacturers Association
Provided by IHS under license with NEMA
No reproduction or networking permitted without license from IHS
Not for Resale

MG 1-1993, Revision 2

Page Number	Revision Number
24	1
25	2
26	1
27	2
28	1
29	1
30	1
31	1
32	1
33	1
34	1
35	1
36	1
37	1
38	1
Part 14	
1	0
2	1
3	0
4	0
5	1
6	1
7	1
8	1
9	1
10	1
11	1
12	1
13	1
14	1
15	1
16	1
17	1
18	1
Part 15	
1	0
2	0
3	0
4	0
Part 16	
1	1
2	1
3	1
4	0
5	0
6	0
7	0
8	0
9	2
10	1
11	0
12	0
Part 18	
1	0
2	0
3	0
4	0
5	0
6	0
7	0
8	0
9	0
10	0
11	0
12	0
13	0
14	0
15	0
16	0
17	0
18	0
19	0
20	0
21	0
22	0
23	0
24	0
25	0
26	0
27	0
28	0
29	0
30	0
31	0
32	0
33	0
34	0
35	0
36	0
37	0
38	0
39	0
40	0
41	0
42	0
43	0
44	2
46	0
47	2
48	0
49	0
50	0
51	0
52	0
53	1
54	2
55	0
56	0
57	0
58	0
59	0
60	0
61	0
62	0
63	2
64	2
65	0
66	0
67	0
68	0
69	0
70	0
71	0
72	0
73	1
74	2
75	0
76	0
77	0
78	0
79	0
80	0
81	0
82	0
83	0
84	0
85	0
86	0
Part 20	
1	0
2	1
3	2
4	2
5	0
6	2
7	2
8	2
9	2
10	1
11	2
12	2
13	2
14	2
15	2
16	2
17	2
18	2
Part 21	
1	0
2	1
3	0
4	0
5	0
6	0
7	2
8	1
9	1
10	1
11	1
12	1
13	1
14	1
15	1
16	1
17	2
18	2
19	2
20	1
21	1
22	1
23	1
24	1
25	1
26	1
27	1
28	1
29	1
30	1
31	1
32	1
33	1
34	1
35	1
36	1
37	1
38	1

Copyright National Electrical Manufacturers Association
Provided by IHS under license with NEMA
No reproduction or networking permitted without license from IHS
Not for Resale

MG 1-1993, Revision 2

Page Number	Revision Number
Part 22	
1	1
2	1
3	1
4	2
5	1
6	1
7	1
8	1
9	2
10	2
11	1
12	1
Part 23	
1	1
2	1
3	1
4	1
5	1
6	1
7	1
8	1
9	2
10	2
11	2
12	2
Part 24	
1	1
2	1
3	1
4	1
5	2
6	2
7	1
8	1
Part 30	
1	1
2	1
3	1
4	1
5	1
6	1
7	1
8	1
Part 31	
1	1
2	1
3	1
4	1
5	1
6	1
7	1
8	1
9	1

Copyright National Electrical Manufacturers Association
Provided by IHS under license with NEMA
No reproduction or networking permitted without license from IHS
Not for Resale

NEMA MG*1 93 ■ 6470247 0502841 585 ■

NEMA STANDARDS PUBLICATION NO. MG 1

nema

Motors and Generators

NEMA

NATIONAL ELECTRICAL MANUFACTURERS ASSOCIATION ● 2101 L STREET, N.W., WASHINGTON, D.C. 20037

Copyright National Electrical Manufacturers Association
Provided by IHS under license with NEMA
No reproduction or networking permitted without license from IHS
Not for Resale

TABLE OF CONTENTS

Page

Foreword i

Section I GENERAL STANDARDS APPLYING TO ALL MACHINES

Part 1 Page

Part 1, Referenced Standards and Definitions
- Referenced Standards 1
- Definitions 3
  - Classification According to Size 3
  - Classification According to Application 4
  - Classification According to Electrical Type 4
  - Classification According to Environmental Protection and Methods of Cooling 8
  - Classification According to Variability of Speed 11
  - Rating, Performance, and Test 12
  - Complete Machines and Parts 14
  - Classification of Insulation Systems 15
  - Miscellaneous 15
  - Classification According to Environmental Protection and Methods of Cooling (Suggested Standard for Future Design) SSFD1

Part 2 Page

Part 2, Terminal Markings
- General 1
- DC Motors and Generators 1
- AC Motors and Generators 7
- AC Generators and Synchronous Motors 7
- Single-Phase Motors 8
- Polyphase Induction Motors 21

Part 3 Page

Part 3, High-Potential Tests 1

Part 4 Page

Part 4, Dimensions, Tolerances, and Mounting 1

Part 5 Page

Part 5, Rotating Electrical Machines
- Classification of Degrees of Protection Provided by Enclosures for Rotating Machines 1
- Appendix A Most Frequently Used Degrees of Protection for Electrical Machines 17

Part 6, Methods of Cooling (IC Code) 1

Part 7, Mechanical Vibration—Measurement, Evaluation and Limits 1

Section II SMALL (FRACTIONAL) AND MEDIUM (INTEGRAL) MACHINES

Part 10 Page

Part 10, Ratings
- AC Small and Medium Motors 1
- DC Small and Medium Motors 9

(continued)

Copyright National Electrical Manufacturers Association
Provided by IHS under license with NEMA
No reproduction or networking permitted without license from IHS
Not for Resale

TABLE OF CONTENTS *(continued)*

Part 11
Page

Part 11, Dimensions
AC and DC Small and Medium Machines 1
AC Small and Medium Machines 7
DC Small and Medium Machines 13

Part 12
Page

Part 12, Tests and Performance
AC and DC Motors 1
AC Motors 5
DC Small and Medium Motors 29

Part 14
Page

Part 14, Application Data
AC and DC Small and Medium Motors 1
AC Small and Medium Machines 5
DC Small and Medium Motors 13

Part 15
Page

Part 15, DC Generators
Ratings 1
Tests and Performance 2
Manufacturing 4

Part 16
Page

Part 16, Synchronous Generators—General Purpose
Definition 1
Ratings 1
Tests and Performance 2
Manufacturing 10
Application Data 10

Part 18
Page

Part 18, Definite-Purpose Machines
Permanent-Split Capacitor Industrial Instrument Motors and Gear Motors 1
Low-Inertia Servo Industrial Instrument Motors and Gear Motors 7
Universal Motor Parts 11
Motors for Hermetic Refrigeration Compressors 13
Small Motors for Shaft-Mounted Fans and Blowers 19
Small Motors for Belted Fans and Blowers Built in Frames 56 and Smaller 22
Small Motors for Air Conditioning Condensers and Evaporator Fans 24
Small Motors for Sump Pumps 34
Small Motors for Gasoline Dispensing Pumps 36
Small Motors for Oil Burners 39
Small Motors for Home Laundry Equipment 41
Motors for Jet Pumps 44
Small Motors for Coolant Pumps 47
Submersible Motors for Deep Well Pumps—4-Inch 49
Submersible Motors for Deep Well Pumps—6-Inch 51
Submersible Motors for Deep Well Pumps—8-Inch 54
Medium DC Elevator Motors 56
Motor-Generator Sets for DC Elevator Motors 58
Medium AC Polyphase Elevator Motors 60
Medium AC Crane Motors 62
Medium Shell-Type Motors for Woodworking and Machine-Tool Applications 68

(continued)

Copyright National Electrical Manufacturers Association
Provided by IHS under license with NEMA
No reproduction or networking permitted without license from IHS
Not for Resale

TABLE OF CONTENTS *(continued)*

Medium AC Squirrel-Cage Induction Motors for Vertical Turbine Pump Applications . . . 71
Medium AC Squirrel-Cage Induction Motors for Close-Coupled Pumps 74
Medium AC Squirrel-Cage Induction Motors for Chemical Process
In-Line Pump Applications 78
Medium AC Squirrel-Cage Induction Motors for Process In-Line Pump Applications . . . 80
DC Permanent-Magnet Tachometer Generators for Control Systems 82
Torque Motors 84
Small Motors for Carbonator Pumps 85

Section III LARGE MACHINES

Part 20
Page

Part 20, Large Machines—Induction Machines
Ratings 1
Manufacturing 11
Application Data 13

Part 21
Page

Part 21, Large Machines—Synchronous Motors
Ratings 1
Tests and Performance 7
Manufacturing 18
Application Data 20

Part 22
Page

Part 22, Large Machines—Synchronous Generators
(Exclusive of Generators for Hydraulic-Turbine Drive above 10,000 kVA)
Ratings 1
Manufacturing 10
Application Data 11

Part 23
Page

Part 23, Large Machines—DC Motors Larger Than 1.25 Horsepower per RPM, Open Type
Classification 1
Ratings 1
Tests and Performance 7
Manufacturing 11
Application Data 11

Part 24
Page

Part 24, Large Machines—DC Generators Larger Than 1.0 Kilowatt per RPM, Open Type Classification
Ratings 1
Tests and Performance 2
Manufacturing 6
Application Data 6

Section IV PERFORMANCE STANDARDS APPLYING TO ALL MACHINES

Part 30, Application Considerations for Constant Speed Motors used on a Sinusoidal Bus with Harmonic Content and General Purpose Motors Used With Variable-Voltage or Variable-Frequency Controls or Both 1

Part 31, Definite-Purpose Inverter-Fed Motors 1

INDEX

Copyright National Electrical Manufacturers Association
Provided by IHS under license with NEMA
No reproduction or networking permitted without license from IHS
Not for Resale

Foreword

The standards appearing in this publication have been developed by the Motor and Generator Section and approved for publication as Standards of the National Electrical Manufacturers Association. They are intended to assist users in the proper selection and application of motors and generators. These standards are revised periodically to provide for changes in user needs, advances in technology, and changing economic trends. All persons having experience in the selection, use, or manufacture of electric motors and generators are encouraged to submit recommendations that will improve the usefulness of these standards. Inquiries, comments, and proposed or recommended revisions should be submitted to the Motor and Generator Section by contacting:

Vice President, Engineering
National Electrical Manufacturers Association
2101 L Street, NW
Washington, DC 20037

The best judgment of the Motor and Generator Section on the performance and construction of motors and generators is represented in these standards. They are based upon sound engineering principles, research, and records of test and field experience. Also involved is an appreciation of the problems of manufacture, installation, and use derived from consultation with and information obtained from manufacturers, users, inspection authorities, and others having specialized experience. For machines intended for general applications, information as to user needs was determined by the individual companies through normal commercial contact with users. For some motors intended for definite applications, the organizations that participated in the development of the standards are listed at the beginning of those definite-purpose motor standards.

Practical information concerning performance, safety, test, construction, and manufacture of alternating-current and direct-current motors and generators within the product scopes defined in the applicable section or sections of this publication is provided in these standards. Although some definite-purpose motors and generators are included, the standards do not apply to machines such as generators and traction motors for railroads, motors for mining locomotives, arc-welding generators, automotive accessory and toy motors and generators, machines mounted on airborne craft, etc.

In the preparation and revision of these standards, consideration has been given to the work of other organizations whose standards are in any way related to motors and generators. Credit is hereby given to all those whose standards may have been helpful in the preparation of this volume.

NEMA Standards Publication No. MG 1-1993 revises and supersedes the NEMA Standards Publication No. MG 1-1978 (R 1981, 1987). Prior to publication, the NEMA Standards, Suggested Standards for Future Design, and Authorized Engineering Information which appear in this publication unchanged since the preceding edition were reaffirmed by the Motor and Generator Section.

Copyright National Electrical Manufacturers Association
Provided by IHS under license with NEMA
No reproduction or networking permitted without license from IHS
Not for Resale

Section I
GENERAL STANDARDS APPLYING TO ALL MACHINES
Part 1
REFERENCED STANDARDS AND DEFINITIONS
Referenced Standards

1.01 REFERENCED STANDARDS

The following publications are adopted, in whole or in part as indicated, by reference in this standards publication. Mailing address of each referenced organization is also provided.

American National Standards Institute (ANSI)
11 West 42nd Street
New York, NY 10036

ANSI B92.1-1970 (R1982)	*Involute Splines and Inspection, Inch Inversion*
ANSI C84.1-1989	*Electric Power Systems and Equipment–Voltage Ratings (60 Hz)*
IEC 34-1-1983	*Rotating Electrical Machines Part One: Rating and Perfomance*

American Society for Testing and Materials (ASTM)
1916 Race Street
Philadelphia, PA 19103

ASTM D149-81	*Test Method for Dielectric Breakdown Voltage and Dielectric Strength of Solid Electrical Insulating Materials at Commercial Power Frequencies*
ASTM D635-81	*Test for Flammability of Self-Supporting Plastics*

Institute of Electrical and Electronics Engineers (IEEE)
445 Hoes Lane
Piscataway, NJ 08855-1331

ANSI/IEEE Std 1-1986	*General Principles for Temperature Limits in the Rating of Electric Equipment*
ANSI/IEEE Std 43-1974 (R1992)	*Recommended Practice for Testing Insulation Resistance of Rotating Machinery*
IEEE Std 85-1973 (R1980)	*Test Procedure for Airborne Sound Measurements on Rotating Electric Machinery*
ANSI/IEEE Std 100-1988	*Standard Dictionary of Electrical and Electronics Terms*
IEEE Std 112-1991	*Standard Test Procedure for Polyphase Induction Motors and Generators*
IEEE Std 113-1985	*Guide on Test Procedures for DC Machines*
ANSI/IEEE Std 114-1982	*Test Procedure for Single-phase Induction Motors*
ANSI/IEEE Std 115-1983 (R1991)	*Test Procedures for Synchronous Machines*
ANSI/IEEE Std 117-1974 (R1992)	*Standard Test Procedure for Evaluation of Systems of Insulating Materials for Random-Wound AC Electric Machinery*
ANSI/IEEE Std 251-1984	*Test Procedures for DC Tachometer Generators*

Copyright National Electrical Manufacturers Association
Provided by IHS under license with NEMA
No reproduction or networking permitted without license from IHS

Not for Resale

ANSI/IEEE Std 275-1992 — *Recommended Practice for Thermal Evaluation of Insulation Systems for AC Electric Machinery Employing Form-wound Pre-insulated Stator Coils, Machines Rated 6900V and Below*

ANSI/IEEE Std 304-1977 (R1992) — *Test Procedure for Evaluation and Classification of Insulation System for DC Machines*

ANSI/IEEE Std 421.1-1986 — *Definitions for Excitation Systems for Synchronous Machines*

IEEE Std 522-1992 — *IEEE Guide for Testing Turn-to-Turn Insulation of Form-Wound Stator Coils for Alternating-Current Rotating Electric Machine*

Society of Automotive Engineers (SAE)
3001 West Big Beaver
Troy, MI 48084

ANSI/SAE J429-1983 — *Mechanical and Material Requirements for Externally Threaded Fasteners*

International Organization for Standardization (ISO)
1, rue de Varembe
1211 Geneva 20
Switzerland

ISO R-1000 — *SI Units and Recommendations for the Use of Their Multiples and of Certain Other Units*

National Electrical Manufacturers Association (NEMA)
2101 L Street NW, Suite 300
Washington, DC 20037

NEMA MG 2-1989 — *Safety Standard for Construction and Guide for Selection, Installation and Use of Electric Motors and Generators*

NEMA MG 3-1974(R1979,1984, 1990) — *Sound Level Prediction for Installed Rotating Electrical Machines*

NEMA MG 13-1984(R1990) — *Frame Assignments for Alternating-Current Integral-horsepower Induction Motors*

National Fire Protection Association (NFPA)
Batterymarch Park
Quincy, MA 02269

ANSI/NFPA 70-1993 — *National Electrical Code*

The Rubber Manufacturers Association, Inc.
1400 K Street NW
Suite 300
Washington, DC 20005
also available from:

Mechanical Power Transmission Association
1717 Howard Street
Evanston, IL 60201

Engineering Standards-Specifications for Drives Using Multiple V-Belts, (A, B, C, D and E Cross-sections), 1977

Standard Specifications for Drives Using Narrow V-Belts (3V, 5V and 8V Cross-sections), 1983

Copyright National Electrical Manufacturers Association
Provided by IHS under license with NEMA
No reproduction or networking permitted without license from IHS

Not for Resale

Definitions

(For definitions not found in Part 1, refer to IEEE Std 100, Standard Dictionary of Electrical Terms.)

CLASSIFICATION ACCORDING TO SIZE

1.02 MACHINE

As used in this standard a machine is an electrical apparatus which depends on electromagnetic induction for its operation and which has one or more component members capable of rotary movement. In particular, the types of machines covered are those generally referred to as motors and generators as defined in Part 1.

1.03 SMALL (FRACTIONAL) MACHINE

A small machine is either: (1) a machine built in a two digit frame number series in accordance with 11.01.1 (or equivalent for machines without feet); or (2) a machine built in a frame smaller than that frame of a medium machine (see 1.04) which has a continuous rating at 1700–1800 rpm of 1 horsepower for motors or 0.75 kilowatt for generators; or (3) a motor rated less than 1/3 horsepower and less than 800 rpm.

1.04 MEDIUM (INTEGRAL) MACHINE

1.04.1 Alternating-Current Medium Machine

An alternating-current medium machine is a machine: (1) built in a three- or four-digit frame number series in accordance with 11.01.2 (or equivalent for machines without feet); and (2) having a continuous rating up to and including the information in Table 1-1.

1.04.2 Direct-Current Medium Machine

A direct-current medium machine is a machine: (1) built in a three- or four-digit frame number series in accordance with 11.01.2 (or equivalent for machines without feet); and (2) having a continuous rating up to and including 1.25 horsepower per rpm for motors or 1.0 kilowatt per rpm for generators.

Table 1-1
ALTERNATING CURRENT MEDIUM MACHINE

Synchronous Speed, Rpm	Motors Hp	Generators, Kilowatt at 0.8 Power Factor
1201–3600	500	400
901–1200	350	300
721–900	250	200
601–720	200	150
515–600	150	125
451–514	125	100

1.05 LARGE MACHINE

1.05.1 Alternating-Current Large Machine

An alternating-current large machine is: (1) a machine having a continuous power rating greater than that given in 1.04.1 for synchronous speed ratings above 450 rpm; or (2) a machine having a continuous power rating greater than that given in 1.03 for synchronous speed ratings equal to or below 450 rpm.

1.05.2 Direct-Current Large Machine

A direct-current large machine is a machine having a continuous rating greater than 1.25 horsepower per rpm for motors or 1.0 kilowatt per rpm for generators.

Copyright National Electrical Manufacturers Association
Provided by IHS under license with NEMA
No reproduction or networking permitted without license from IHS

Not for Resale

CLASSIFICATION ACCORDING TO APPLICATION

(Some of the definitions in this section apply only to specific types or sizes of machines.)

1.06 GENERAL PURPOSE MOTOR

1.06.1 General-Purpose Alternating-Current Motor

A general-purpose alternating-current motor is an induction motor, rated 200 horsepower and less, which incorporates all of the following:

a. Open or enclosed construction
b. Rated continuous duty
c. Service factor in accordance with 12.47
d. Class A or higher rated insulation system with a temperature rise not exceeding that specified in 12.42 for Class A insulation for small motors or Class B or higher rated insulation system with a temperature rise not exceeding that specified in 12.43 for Class B insulation for medium motors.

It is designed in standard ratings with standard operating characteristics and mechanical construction for use under usual service conditions without restriction to a particular application or type of application.

1.06.2 General-Purpose Direct-Current Small Motor

A general-purpose direct-current small motor is a small motor of mechanical construction suitable for general use under usual service conditions and has ratings and constructional and performance characteristics applying to direct-current small motors as given in Parts 10, 11, 12, and 14.

1.07 INDUSTRIAL SMALL MOTOR

An industrial small motor is an alternating-current or direct-current motor built in either NEMA frame 42, 48, or 56 suitable for industrial use.

It is designed in standard ratings with standard operating characteristics for use under usual service conditions without restriction to a particular application or type of application.

1.08 INDUSTRIAL DIRECT-CURRENT MEDIUM MOTOR

An industrial direct-current motor is a medium motor of mechanical construction suitable for industrial use under usual service conditions and has ratings and constructional and performance characteristics applying to direct current medium motors as given in Parts 10, 11, 12, and 14.

1.09 INDUSTRIAL DIRECT-CURRENT GENERATOR

An industrial direct-current generator is a generator of mechanical construction suitable for industrial use under usual service conditions and has ratings and constructional and performance characteristics applying to direct current generators as given in Parts 11 and 15.

1.10 DEFINITE-PURPOSE MOTOR

A definite-purpose motor is any motor designed in standard ratings with standard operating characteristics or mechanical construction for use under service conditions other than usual or for use on a particular type of application.

1.11 GENERAL INDUSTRIAL MOTORS

See 23.01.

1.12 METAL ROLLING MILL MOTORS

See 23.02.

1.13 REVERSING HOT MILL MOTORS

See 23.03.

1.14 SPECIAL-PURPOSE MOTOR

A special-purpose motor is a motor with special operating characteristics or special mechanical construction, or both, designed for a particular application and not falling within the definition of a general-purpose or definite-purpose motor.

CLASSIFICATION ACCORDING TO ELECTRICAL TYPE

1.15 GENERAL

1.15.1 Electric Motor

An electric motor is a machine that transforms electric power into mechanical power.

1.15.2 Electric Generator

An electric generator is a machine that transforms mechanical power into electric power.

1.15.3 Electric Machines

1.15.3.1 ASYNCHRONOUS MACHINE

An asynchronous machine is an alternating-current machine in which the rotor does not turn at a synchronous speed.

1.15.3.2 DIRECT-CURRENT (COMMUTATOR) MACHINE

A direct-current (commutator) machine is a machine incorporating an armature winding connected to a commutator and magnetic poles which are excited from a direct-current source or permanent magnets.

Copyright National Electrical Manufacturers Association
Provided by IHS under license with NEMA
No reproduction or networking permitted without license from IHS

Not for Resale

1.15.3.3 INDUCTION MACHINE

An induction machine is an asynchronous machine that comprises a magnetic circuit interlinked with two electric circuits, or sets of circuits, rotating with respect to each other and in which power is transferred from one circuit to another by electromagnetic induction.

1.15.3.4 SYNCHRONOUS MACHINE

A synchronous machine is an alternating-current machine in which the average speed of normal operation is exactly proportional to the frequency of the system to which it is connected.

1.16 ALTERNATING-CURRENT MOTORS

Alternating-Current motors are of three general types: induction, synchronous, and series-wound and are defined as follows.

1.16.1 Induction Motor

An induction motor is an induction machine in which a primary winding on one member (usually the stator) is connected to the power source, and a polyphase secondary winding or a squirrel-cage secondary winding on the other member (usually the rotor) carries induced current.

1.16.1.1 SQUIRREL-CAGE INDUCTION MOTOR

A squirrel-cage induction motor is an induction motor in which the secondary circuit (squirrel-cage winding) consists of a number of conducting bars having their extremities connected by metal rings or plates at each end.

1.16.1.2 WOUND-ROTOR INDUCTION MOTOR

A wound-rotor induction motor is an induction motor in which the secondary circuit consists of a polyphase winding or coils whose terminals are either short-circuited or closed through suitable circuits.

1.16.2 Synchronous Motor

A synchronous motor is a synchronous machine for use as a motor.

1.16.2.1 DIRECT-CURRENT-EXCITED SYNCHRONOUS MOTOR

Unless otherwise stated, it is generally understood that a synchronous motor has field poles excited by direct current.

1.16.2.2 PERMANENT-MAGNET SYNCHRONOUS MOTOR

A permanent-magnet synchronous motor is a synchronous motor in which the field excitation is provided by permanent magnets.

1.16.2.3 RELUCTANCE SYNCHRONOUS MOTOR

A reluctance synchronous motor is a synchronous motor similar in construction to an induction motor, in which the member carrying the secondary circuit has a cyclic variation of reluctance providing the effect of salient poles, without permanent magnets or direct-current excitation. It starts as an induction motor, is normally provided with a squirrel-cage winding, but operates normally at synchronous speed.

1.16.3 Series-Wound Motor

A series-wound motor is a commutator motor in which the field circuit and armature are connected in series.

1.17 POLYPHASE MOTORS

Alternating-Current polyphase motors are of the squirrel-cage induction, wound-rotor induction, or synchronous types.

1.17.1 Design Letters of Polyphase Squirrel-Cage Medium Motors

Polyphase squirrel-cage medium induction motors may be one of the following:

1.17.1.1 DESIGN A

A Design A motor is a squirrel-cage motor designed to withstand full-voltage starting and developing locked-rotor torque as shown in 12.38, pull-up torque as shown in 12.40, breakdown torque as shown in 12.39, with locked-rotor current higher than the values shown in 12.35 for 60 hertz and 12.36 for 50 hertz and having a slip at rated load of less than 5 percent.[1]

1.17.1.2 DESIGN B

A Design B motor is a squirrel-cage motor designed to withstand full-voltage starting, developing locked-rotor, breakdown, and pull-up torques adequate for general application as specified in 12.38, 12.39, and 12.40, drawing locked-rotor current not to exceed the values shown in 12.35 for 60 hertz and 12.36 for 50 hertz, and having a slip at rated load of less than 5 percent.[1]

1.17.1.3 DESIGN C

A Design C motor is a squirrel-cage motor designed to withstand full-voltage starting, developing locked-rotor torque for special high-torque application up to the values shown in 12.38, pull-up torque as shown in 12.40, breakdown torque up to the values shown in 12.39, with locked-rotor current not to exceed the values shown in 12.35 for 60 hertz and 12.36 for 50 hertz, and having a slip at rated load of less than 5 percent.

---

[1] Motors with 10 or more poles shall be permitted to have slip slightly greater than 5 percent.

Copyright National Electrical Manufacturers Association
Provided by IHS under license with NEMA
No reproduction or networking permitted without license from IHS
Not for Resale

1.17.1.4 DESIGN D

A Design D motor is a squirrel-cage motor designed to withstand full-voltage starting, developing high locked rotor torque as shown in 12.38, with locked rotor current not greater than shown in 12.35 for 60 hertz and 12.36 for 50 hertz, and having a slip at rated load of 5 percent or more.

1.17.1.5 DESIGN E

A Design E motor is a squirrel-cage motor designed to withstand full-voltage starting, developing locked-rotor torque as shown in 12.38, with locked-rotor current not greater than shown in 12.35a for 60 hertz and 12.36a for 50 hertz, having a slip at rated load of less than 5 percent, and having a nominal full load efficiency not less than shown in 12.60.

1.18 SINGLE-PHASE MOTORS

Alternating-Current single-phase motors are usually induction or series-wound although single-phase synchronous motors are available in the smaller ratings.

1.18.1 Design Letters of Single-Phase Small Motors

1.18.1.1 DESIGN N

A Design N motor is a single-phase small motor designed to withstand full-voltage starting and with a locked-rotor current not to exceed the values shown in 12.33.

1.18.1.2 DESIGN O

A Design O motor is a single-phase small motor designed to withstand full-voltage starting and with a locked-rotor current not to exceed the values shown in 12.33.

1.18.2 Design Letters of Single-Phase Medium Motors

Single-phase medium motors include the following:

1.18.2.1 DESIGN L

A Design L motor is a single-phase medium motor designed to withstand full-voltage starting and to develop a breakdown torque as shown in 10.34 with a locked-rotor current not to exceed the values shown in 12.34.

1.18.2.2 DESIGN M

A Design M motor is a single-phase medium motor designed to withstand full-voltage starting and to develop a breakdown torque as shown in 10.34 with a locked-rotor current not to exceed the values shown in 12.34.

1.18.3 Single-Phase Squirrel-Cage Motors

Single-phase squirrel-cage induction motors are classified and defined as follows.

1.18.3.1 SPLIT-PHASE MOTOR

A split-phase motor is a single-phase induction motor equipped with an auxiliary winding, displaced in magnetic position from, and connected in parallel with, the main winding.

Unless otherwise specified, the auxiliary circuit is assumed to be opened when the motor has attained a predetermined speed. The term "split-phase motor," used without qualification, describes a motor to be used without impedance other than that offered by the motor windings themselves, other types being separately defined.

1.18.3.2 RESISTANCE-START MOTOR

A resistance-start motor is a form of split-phase motor having a resistance connected in series with the auxiliary winding. The auxiliary circuit is opened when the motor has attained a predetermined speed.

1.18.3.3 CAPACITOR MOTOR

A capacitor motor is a single-phase induction motor with a main winding arranged for direct connection to a source of power and an auxiliary winding connected in series with a capacitor. There are three types of capacitor motors, as follows.

1.18.3.3.1 Capacitor-Start Motor

A capacitor-start motor is a capacitor motor in which the capacitor phase is in the circuit only during the starting period.

1.18.3.3.2 Permanent-Split Capacitor Motor

A permanent-split capacitor motor is a capacitor motor having the same value of capacitance for both starting and running conditions.

1.18.3.3.3 Two-Value Capacitor Motor

A two-value capacitor motor is a capacitor motor using different values of effective capacitance for the starting and running conditions.

1.18.3.4 SHADED-POLE MOTOR

A shaded-pole motor is a single-phase induction motor provided with an auxiliary short-circuited winding or windings displaced in magnetic position from the main winding.

1.18.4 Single-Phase Wound-Rotor Motors

Single-phase wound-rotor motors are defined and classified as follows.

1.18.4.1 REPULSION MOTOR

A repulsion motor is a single-phase motor which has a stator winding arranged for connection to a source of power and a rotor winding connected to a commutator. Brushes on the commutator are short-circuited and are so placed that the magnetic axis of the rotor winding is inclined to the magnetic axis of the stator winding. This type of motor has a varying-speed characteristic.

Copyright National Electrical Manufacturers Association
Provided by IHS under license with NEMA
No reproduction or networking permitted without license from IHS

Not for Resale

1.18.4.2 REPULSION-START INDUCTION MOTOR

A repulsion-start induction motor is a single-phase motor having the same windings as a repulsion motor, but at a predetermined speed the rotor winding is short-circuited or otherwise connected to give the equivalent of a squirrel-cage winding. This type of motor starts as a repulsion motor but operates as an induction motor with constant speed characteristics.

1.18.4.3 REPULSION-INDUCTION MOTOR

A repulsion-induction motor is a form of repulsion motor which has a squirrel-cage winding in the rotor in addition to the repulsion motor winding. A motor of this type may have either a constant-speed (see 1.30) or varying-speed (see 1.31) characteristic.

1.19 UNIVERSAL MOTORS

A universal motor is a series-wound motor designed to operate at approximately the same speed and output on either direct current or single-phase alternating current of a frequency not greater than 60 hertz and approximately the same rms voltage.

1.19.1 Series-Wound Motor

A series-wound motor is a commutator motor in which the field circuit and armature circuit are connected in series.

1.19.2 Compensated Series-Wound Motor

A compensated series-wound motor is a series-wound motor with a compensating field winding.

The compensating field winding and the series field winding shall be permitted to be combined into one field winding.

1.20 ALTERNATING-CURRENT GENERATORS

Alternating-Current generators are of two basic types induction and synchronous-and are defined as follows.

1.20.1 Induction Generator

An induction generator is an induction machine driven above synchronous speed by an external source of mechanical power for use as a generator.

1.20.2 Synchronous Generator

A synchronous generator is a synchronous machine for use as a generator.

NOTE—Unless otherwise stated it is generally understood that a synchronous generator has field poles excited by direct current.

1.21 DIRECT-CURRENT MOTORS

Direct-Current motors are of four general types—shunt wound, series wound, compound wound, and permanent magnet and are defined as follows.

1.21.1 Shunt-Wound Motor

A shunt-wound motor is either a straight shunt-wound motor or a stabilized shunt-wound motor.

1.21.1.1 STRAIGHT SHUNT-WOUND MOTOR

A straight shunt-wound motor is a direct-current motor in which the field circuit is connected either in parallel with the armature circuit or to a separate source of excitation voltage. The shunt field is the only winding supplying field excitation.

1.21.1.2 STABILIZED SHUNT-WOUND MOTOR

A stabilized shunt-wound motor is a direct-current motor in which the shunt field circuit is connected either in parallel with the armature circuit or to a separate source of excitation voltage and which also has a light series winding added to prevent a rise in speed or to obtain a slight reduction in speed with increase in load.

1.21.2 Series-Wound Motor

A series-wound motor is a motor in which the field circuit and armature circuit are connected in series.

1.21.3 Compound-Wound Motor

A compound-wound motor is a direct-current motor which has two separate field windings-one, usually the predominating field, connected as in a straight shunt wound motor, and the other connected in series with the armature circuit.

1.21.4 Permanent Magnet Motor

A permanent magnet motor is a direct-current motor in which the field excitation is supplied by permanent magnets.

1.22 DIRECT-CURRENT GENERATORS

Direct-current generators are of two general types: shunt wound and compound wound—and are defined as follows.

1.22.1 Shunt-Wound Generator

A shunt-wound generator is a direct-current generator in which the field circuit is connected either in parallel with the armature circuit or to a separate source of excitation voltage.

1.22.2 Compound-Wound Generator

A compound-wound generator is a direct-current generator which has two separate field windings-one, usually the predominating field, connected as in a shunt-wound generator, and the other connected in series with the armature circuit.

Copyright National Electrical Manufacturers Association
Provided by IHS under license with NEMA
No reproduction or networking permitted without license from IHS

Not for Resale

CLASSIFICATION ACCORDING TO ENVIRONMENTAL PROTECTION AND METHODS OF COOLING[1]

1.25 OPEN MACHINE

An open machine is one having ventilating openings which permit passage of external cooling air over and around the windings of the machine. The term "open machine," when applied to large apparatus without qualification, designates a machine having no restriction to ventilation other than that necessitated by mechanical construction.

1.25.1 Dripproof Machine

A dripproof machine is an open machine in which the ventilating openings are so constructed that successful operation is not interfered with when drops of liquid or solid particles strike or enter the enclosure at any angle from 0 to 15 degrees downward from the vertical.[2]

1.25.2 Splash-Proof Machine

A splash-proof machine is an open machine in which the ventilating openings are so constructed that successful operation is not interfered with when drops of liquid or solid particles strike or enter the enclosure at any angle not greater than 100 degrees downward from the vertical.[1]

1.25.3 Semi-Guarded Machine

A semi-guarded machine is an open machine in which part of the ventilating openings in the machine, usually in the top half, are guarded as in the case of a "guarded machine" but the others are left open.

1.25.4 Guarded Machine

1.25.4.1 GUARDED MACHINE (NEMA STANDARD)

A guarded machine is an open machine in which all openings giving direct access to live metal or rotating parts (except smooth rotating surfaces) are limited in size by the structural parts or by screens, baffles, grilles, expanded metal, or other means to prevent accidental contact with hazardous parts. Openings giving direct access to such live or rotating parts shall not permit the passage of a cylindrical rod 0.75 inch in diameter.

The openings in the machine enclosure shall be such that (1) a probe such as that illustrated in Figure 1-1, when inserted through the openings, will not touch an uninsulated live metal part or a hazardous rotating part and (2) a probe such as that illustrated in Figure 1-2, when inserted through the openings, will not touch film coated wire.

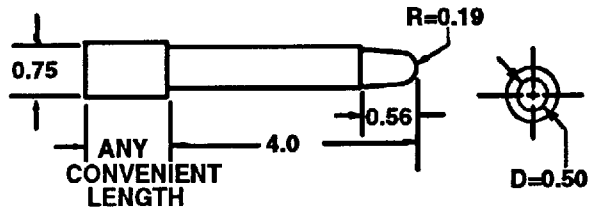

Figure 1-1
PROBE

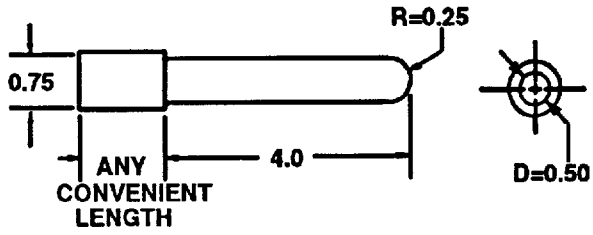

Figure 1-2
PROBE

1.25.4.2 GUARDED MACHINE (SUGGESTED STANDARD FOR FUTURE DESIGN)

A guarded machine is an open machine in which all openings giving direct access to live metal or rotating parts (except smooth rotating surfaces) are limited in size by the structural parts or by screens, baffles, grills, expanded metal, or other means to prevent accidental contact with hazardous parts. Openings giving direct access to such live or rotating parts shall not permit the passage of a cylindrical rod 0.75 inch in diameter.

The openings in the machine enclosure shall be such that (1) a probe such as that illustrated in Figure 1-3, when inserted through the openings, will not touch a hazardous rotating part, (2) a probe such as that illustrated in Figure 1-4, when inserted through the openings, will not touch film-coated wire, and (3) an articulated probe such as that

---

[1] See Suggested Standard for Future Design at the end of this Part.

[2] A method for demonstrating successful operation is: (1) by exposing the machine, with the motor at rest, to a spray of water at the specified angle and at a rate no greater than 1 inch per hour for 1 hour, and (2) after exposure, by subjecting the windings to a high-potential test of 50 percent of the normal high-potential test followed by a 15-minute no-load operation at rated voltage.

Copyright National Electrical Manufacturers Association
Provided by IHS under license with NEMA
No reproduction or networking permitted without license from IHS

Not for Resale

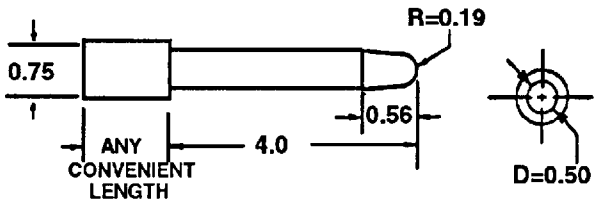

Figure 1-3
PROBE FOR HAZARDOUS ROTATING PARTS

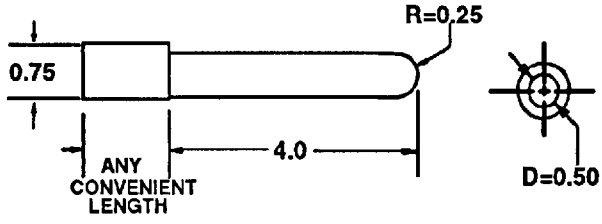

Figure 1-4
PROBE FOR FILM-COATED WIRE

illustrated in Figure 1-5, when inserted through the openings, will not touch an uninsulated live metal part.

1.25.5 Dripproof Guarded Machine

A dripproof guarded machine is a dripproof machine whose ventilating openings are guarded in accordance with 1.25.4.

1.25.6 Open Externally Ventilated Machine

An open externally ventilated machine is one which is ventilated by means of a separate motor-driven blower mounted on the machine enclosure. Mechanical protection shall be as defined in 1.25.1 to 1.25.5, inclusive. This machine is sometimes known as a blower-ventilated or a forced-ventilated machine.

1.25.7 Open Pipe-Ventilated Machines[1]

An open pipe-ventilated machine is an open machine except that openings for the admission of the ventilating air are so arranged that inlet ducts or pipes can be connected to them. Open pipe-ventilated machines shall be self-ventilated (air circulated by means integral with the machine) or forced-ventilated (air circulated by means external to and not a part of the machine). Enclosures shall be as defined in 1.25.1 to 1.25.5, inclusive.

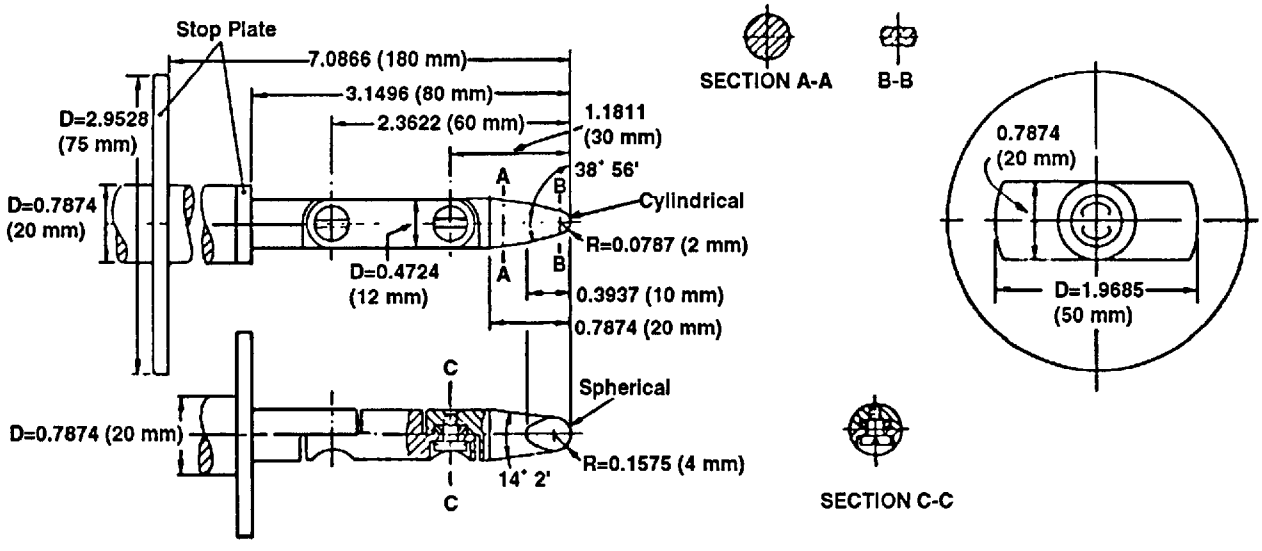

Figure 1-5
ARTICULATED PROBE FOR UNINSULATED LIVE METAL PARTS
(Courtesy of IEC)

[1] See 1.26.6 for definition of totally enclosed pipe-ventilated machine.

Copyright National Electrical Manufacturers Association
Provided by IHS under license with NEMA
No reproduction or networking permitted without license from IHS

Not for Resale

1.25.8 Weather-Protected Machine

1.25.8.1 TYPE I

A weather-protected Type I machine is an open machine with its ventilating passages so constructed as to minimize the entrance of rain, snow and air-borne particles to the electric parts and having its ventilated openings so constructed as to prevent the passage of a cylindrical rod 0.75 inch in diameter.

1.25.8.2 TYPE II

A weather-protected Type II machine shall have, in addition to the enclosure defined for a weather-protected Type I machine, its ventilating passages at both intake and discharge so arranged that high-velocity air and air-borne particles blown into the machine by storms or high winds can be discharged without entering the internal ventilating passages leading directly to the electric parts of the machine itself. The normal path of the ventilating air which enters the electric parts of the machine shall be so arranged by baffling or separate housings as to provide at least three abrupt changes in direction, none of which shall be less than 90 degrees. In addition, an area of low velocity not exceeding 600 feet per minute shall be provided in the intake air path to minimize the possibility of moisture or dirt being carried into the electric parts of the machine.

1.26 TOTALLY ENCLOSED MACHINE

A totally enclosed machine is one so enclosed as to prevent the free exchange of air between the inside and the outside of the case but not sufficiently enclosed to be termed air-tight.

1.26.1 Totally Enclosed Nonventilated Machine

A totally enclosed nonventilated machine is a totally enclosed machine which is not equipped for cooling by means external to the enclosing parts.

1.26.2 Totally Enclosed Fan-Cooled Machine

A totally enclosed fan-cooled machine is a totally enclosed machine equipped for exterior cooling by means of a fan or fans integral with the machine but external to the enclosing parts.

1.26.3 Explosion-Proof Machine[1]

An explosion-proof machine is a totally enclosed machine whose enclosure is designed and constructed to withstand an explosion of a specified gas or vapor which may occur within it and to prevent the ignition of the specified gas or vapor surrounding the machine by sparks, flashes or explosions of the specified gas or vapor which may occur within the machine casing.

1.26.4 Dust-Ignition-Proof Machine[2]

A dust-ignition-proof machine is a totally enclosed machine whose enclosure is designed and constructed in a manner which will exclude ignitable amounts of dust or amounts which might affect performance or rating, and which will not permit arcs, sparks, or heat otherwise generated or liberated inside of the enclosure to cause ignition of exterior accumulations or atmospheric suspensions of a specific dust on or in the vicinity of the enclosure.

Successful operation of this type of machine requires avoidance of overheating from such causes as excessive overloads, stalling, or accumulation of excessive quantities of dust on the machine.

1.26.5 Water-Proof Machine[3]

A water-proof machine is a totally enclosed machine so constructed that it will exclude water applied in the form of a stream from a hose, except that leakage may occur around the shaft provided it is prevented from entering the oil reservoir and provision is made for automatically draining the machine. The means for automatic draining may be a check valve or a tapped hole at the lowest part of the frame which will serve for application of a drain pipe.

1.26.6 Totally Enclosed Pipe-Ventilated Machine[4]

A totally enclosed pipe-ventilated machine is a machine with openings so arranged that when inlet and outlet ducts or pipes are connected to them there is no free exchange of the internal air and the air outside the case. Totally enclosed pipe-ventilated machines may be self-ventilated (air circulated by means integral with the machine) or forced-ventilated (air circulated by means external to and not a part of the machine).

1.26.7 Totally Enclosed Water-Cooled Machine

A totally enclosed water-cooled machine is a totally enclosed machine which is cooled by circulating water, the water or water conductors coming in direct contact with the machine parts.

---

[1] See ANSI/NFPA 70, National Electrical Code, Article 500—For Hazardous Locations, Class I, Groups A, B, C, or D.

[2] See ANSI/NFPA 70, National Electrical Code, Article 500—For Hazardous Locations, Class II, Groups E, F, or G.

[3] A common form of test for a water-proof machine is to play on the machine a stream of water from a hose with a 1-inch nozzle delivering at least 65 gallons per minute from a distance of about 10 feet, from any direction, for a period of not less than 5 minutes.

[4] See 1.25.7 for definition of an open pipe-ventilated machine.

Copyright National Electrical Manufacturers Association
Provided by IHS under license with NEMA
No reproduction or networking permitted without license from IHS

Not for Resale

and a fan or fans, integral with the rotor shaft or separate, for circulating the internal air.

1.26.9 Totally Enclosed Air-to-Air-Cooled Machine

A totally enclosed air-to-air-cooled machine is a totally enclosed machine which is cooled by circulating the internal air through a heat exchanger which, in turn, is cooled by circulating external air. It is provided with an air-to-air heat exchanger for cooling the internal air and a fan or fans, integral with the rotor shaft or separate, for circulating the internal air and a fan or fans integral with the rotor shaft, or separate, but external to the enclosing part or parts for circulating the external air.

1.26.10 Totally Enclosed Fan-Cooled Guarded Machine

A totally enclosed fan-cooled guarded machine is a totally enclosed fan-cooled machine in which all openings giving direct access to the fan are limited in size by the design of the structural parts or by screens, grills, expanded metal, etc., to prevent accidental contact with the fan. Such openings shall not permit the passage of a cylindrical rod 0.75 inch in diameter, and a probe such as that shown in Figure 1-1 or 1-2 of 1.25.4.1 shall not contact the blades, spokes, or other irregular surfaces of the fan.

1.26.11 Totally Enclosed Air-Over Machine

A totally enclosed air-over machine is a totally enclosed machine intended for exterior cooling by a ventilating means external to the machine.

1.27 MACHINE WITH ENCAPSULATED OR SEALED WINDINGS

1.27.1 Machine with Moisture Resistant Windings[1]

A machine with moisture-resistant windings is one in which the windings have been treated such that exposure to a moist atmosphere will not readily cause malfunction. This type of machine is intended for exposure to moisture conditions that are more excessive than the usual insulation system can withstand.

Alternating-Current squirrel-cage machines of this type shall be capable of passing the test described in 12.63 as demonstrated on a representative sample or prototype.

1.27.2 Machine with Sealed Windings[1]

A machine with sealed windings is one which has an insulation system which, through the use of materials, processes, or a combination of materials and processes, results in windings and connections that are sealed against contaminants. This type of machine is intended for environmental conditions that are more severe than the usual insulation system can withstand.

Alternating-Current squirrel-cage machines of this type shall be capable of passing the tests described in 12.62 or 20.49.

CLASSIFICATION ACCORDING TO VARIABILITY OF SPEED

1.30 CONSTANT-SPEED MOTOR

A constant-speed motor is one in which the speed of normal operation is constant or practically constant; for example, a synchronous motor, an induction motor with small slip, or a dc shunt-wound motor.

1.31 VARYING-SPEED MOTOR

A varying-speed motor is one in which the speed varies with the load, ordinarily decreasing when the load increases; such as a series-wound or repulsion motor.

1.32 ADJUSTABLE-SPEED MOTOR

An adjustable-speed motor is one in which the speed can be controlled over a defined range, but when once adjusted remains practically unaffected by the load.

Examples of adjustable-speed motors are: a direct-current shunt wound motor with field resistance control designed for a considerable range of speed adjustment; or an alternating current motor controlled by an adjustable frequency power supply.

1.33 BASE SPEED OF AN ADJUSTABLE-SPEED MOTOR

The base speed of an adjustable-speed motor is the lowest rated speed obtained at rated load and rated voltage at the temperature rise specified in the rating.

1.34 ADJUSTABLE VARYING-SPEED MOTOR

An adjustable varying-speed motor is one in which the speed can be adjusted gradually, but when once adjusted for a given load will vary in considerable degree with change in load; such as a dc compound-wound motor adjusted by field control or a wound-rotor induction motor with rheostatic speed control.

---

[1] This machine shall be permitted to have any one of the enclosures described in 1.25 or 1.26.

Copyright National Electrical Manufacturers Association
Provided by IHS under license with NEMA
No reproduction or networking permitted without license from IHS
Not for Resale

1.35 MULTISPEED MOTOR

A multispeed motor is one which can be operated at any one of two or more definite speeds, each being practically independent of the load. For example, a dc motor with two armature windings or an induction motor with windings capable of various pole groupings. In the case of multispeed permanent-split capacitor and shaded pole motors, the speeds are dependent upon the load.

RATING, PERFORMANCE, AND TEST

1.40 RATING OF A MACHINE

The rating of a machine shall consist of the output power together with any other characteristics, such as speed, voltage, and current, assigned to it by the manufacturer. For machines which are designed for absorbing power, the rating shall be the input power.

1.40.1 Continuous Rating

The continuous rating defines the load which can be carried for an indefinitely long period of time.

1.40.2 Short-Time Rating

The short-time rating defines the load which can be carried for a short and definitely specified time.

1.41 EFFICIENCY

1.41.1 General

The efficiency of a motor or generator is the ratio of its useful power output to its total power input and is usually expressed in percentage.

1.41.2 Energy Efficient Polyphase Squirrel-Cage Induction Motor ▲

An energy efficient polyphase squirrel-cage induction motor is one having an efficiency in accordance with 12.59.

1.42 POWER FACTOR

The power factor of an ac motor or generator is the ratio of the kilowatt input (or output) to the kVA input (or output) and is usually expressed as a percentage.

1.43 SERVICE FACTOR—AC MOTORS

The service factor of an ac motor is a multiplier which, when applied to the rated horsepower, indicates a permissible horsepower loading which may be carried under the conditions specified for the service factor (see 14.36).

1.44 SPEED REGULATION OF DC MOTORS

The speed regulation of a dc motor is the difference between the steady no-load speed and the steady rated-load speed, expressed in percent of rated-load speed.

1.44.1 Percent Compounding of Direct-Current Machines

The percent of the total field-ampere turns at full load that is contributed by the series field.

NOTES

1—The percent compounding is determined at rated shunt field current.

2—Percent regulation of a compound wound dc motor or generator is related to but not the same as percent compounding.

1.45 VOLTAGE REGULATION OF DIRECT-CURRENT GENERATORS

The voltage regulation of a direct-current generator is the final change in voltage with constant field rheostat setting when the specified load is reduced gradually to zero, expressed as a percent of rated-load voltage, the speed being kept constant.

NOTE—In practice, it is often desirable to specify the overall regulation of the generator and its driving machine, thus taking into account the speed regulation of the driving machine.

1.46 SECONDARY VOLTAGE OF WOUND-ROTOR MOTORS

The secondary voltage of wound-rotor motors is the open-circuit voltage at standstill, measured across the slip rings, with rated voltage applied on the primary winding.

1.47 FULL-LOAD TORQUE

The full-load torque of a motor is the torque necessary to produce its rated horsepower at full-load speed. In pounds at a foot radius, it is equal to the horsepower times 5252 divided by the full-load speed.

1.48 LOCKED-ROTOR TORQUE (STATIC TORQUE)

The locked-rotor torque of a motor is the minimum torque which it will develop at rest for all angular positions of the rotor, with rated voltage applied at rated frequency.

1.49 PULL-UP TORQUE

The pull-up torque of an alternating current motor is the minimum torque developed by the motor during the period of acceleration from rest to the speed at which breakdown torque occurs. For motors which do not have a definite breakdown torque, the pull-up torque is the minimum torque developed up to rated speed.

1.50 PUSHOVER TORQUE

The pushover torque of an induction generator is the maximum torque which it will absorb with rated voltage applied at rated frequency, without an abrupt increase in speed.

1.51 BREAKDOWN TORQUE

The breakdown torque of a motor is the maximum torque which it will develop with rated voltage applied at rated frequency, without an abrupt drop in speed.

1.52 PULL-OUT TORQUE

The pull-out torque of a synchronous motor is the maximum sustained torque which the motor will develop at

Copyright National Electrical Manufacturers Association
Provided by IHS under license with NEMA
No reproduction or networking permitted without license from IHS

Not for Resale

1.51 BREAKDOWN TORQUE

The breakdown torque of a motor is the maximum torque which it will develop with rated voltage applied at rated frequency, without an abrupt drop in speed.

1.52 PULL-OUT TORQUE

The pull-out torque of a synchronous motor is the maximum sustained torque which the motor will develop at synchronous speed with rated voltage applied at rated frequency and with normal excitation.

1.53 PULL-IN TORQUE

The pull-in torque of a synchronous motor is the maximum constant torque under which the motor will pull its connected inertia load into synchronism, at rated voltage and frequency, when its field excitation is applied.

The speed to which a motor will bring its load depends on the power required to drive it, and whether the motor can pull the load into step from this speed, depends on the inertia of the revolving parts, so that the pull-in torque cannot be determined without having the Wk^2 as well as the torque of the load.

1.54 LOCKED-ROTOR CURRENT

The locked-rotor current of a motor is the steady-state current taken from the line, with the rotor locked and with rated voltage (and rated frequency in the case of alternating-current motors) applied to the motor.

1.55 NO-LOAD CURRENT

No-load current is the current flowing through a line terminal of a winding when rated voltage is applied at rated frequency with no connected load.

1.56 TEMPERATURE TESTS

Temperature tests are tests taken to determine the temperature rise of certain parts of the machine above the ambient temperature, when running under a specified load.

1.57 AMBIENT TEMPERATURE

Ambient temperature is the temperature of the surrounding cooling medium, such as gas or liquid, which comes into contact with the heated parts of the apparatus.

NOTE—Ambient temperature is commonly known as "room temperature" in connection with air-cooled apparatus not provided with artificial ventilation.

1.58 HIGH-POTENTIAL TESTS

High-potential tests are tests which consist of the application of a voltage higher than the rated voltage for a specified time for the purpose of determining the adequacy against breakdown of insulating materials and spacings under normal conditions. (See Part 3.)

1.59 STARTING CAPACITANCE FOR A CAPACITOR MOTOR

The starting capacitance for a capacitor motor is the total effective capacitance in series with the starting winding under locked-rotor conditions.

1.60 RADIAL MAGNETIC PULL AND AXIAL CENTERING FORCE

1.60.1 Radial Magnetic Pull

The radial magnetic pull of a motor or generator is the magnetic force on the rotor resulting from its radial (air gap) displacement from magnetic center.

1.60.2 Axial Centering Force

The axial centering force of a motor or generator is the magnetic force on the rotor resulting from its axial displacement from magnetic center.

Unless other conditions are specified, the value of radial magnetic pull and axial centering force will be for no load, with rated voltage, rated field current, and rated frequency applied, as applicable.

1.61 INDUCTION MOTOR TIME CONSTANTS

1.61.1 General

When a polyphase induction motor is open-circuited or short-circuited while running at rated speed, the rotor flux-linkages generate a voltage in the stator winding. The decay of the rotor-flux linkages, and the resultant open-circuit terminal voltage or short-circuit current, is determined by the various motor time constants defined by the following equations.

1.61.2 Open-Circuit AC Time Constant

$$T''_{do} = \frac{X_M + X_2}{2\pi f r_2} \quad \text{(seconds)}$$

1.61.3 Short-Circuit AC Time Constant

$$T''_{d} = \frac{X_S}{X_1 + X_M} T''_{do} \quad \text{(seconds)}$$

1.61.4 Short-Circuit DC Time Constant

$$T_a = \frac{X_S}{2\pi f r_1 \left[1 + \frac{LL_s}{kW_1}\right]} \quad \text{(seconds)}$$

Copyright National Electrical Manufacturers Association
Provided by IHS under license with NEMA
No reproduction or networking permitted without license from IHS

Not for Resale

1.61.5 X/R Ratio

$$X/R = \frac{X_S}{r_1\left[1+\frac{LL_s}{kW_1}\right]} \text{ (radians)}$$

1.61.6 Definitions (See Figure 1-6):

r_1 = Stator dc resistance per phase corrected to operating temperature

r_2 = Rotor resistance per phase at rated speed and operating temperature referred to stator

X_1 = Stator leakage reactance per phase at rated current

X_2 = Rotor leakage reactance per phase at rated speed and rated current referred to stator

X_S = Total starting reactance (stator and rotor) per phase at zero speed and locked-rotor current

LL_s = Fundamental-frequency component of stray-load loss in kW at rated current

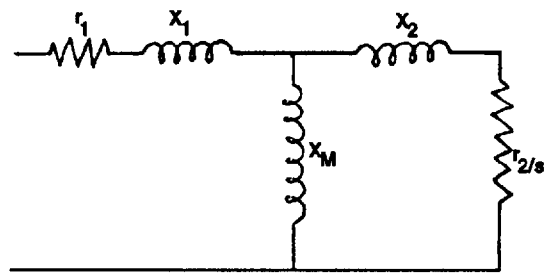

Figure 1-6

kW_1 = Stator I^2R loss in kW at rated current and operating temperature

f = Rated frequency, hertz

s = Slip in per unit of synchronous speed

COMPLETE MACHINES AND PARTS

1.62 SYNCHRONOUS GENERATOR-COMPLETE

1.62.1 Belted Type

A belted-type generator consists of a generator with a shaft extension suitable for the driving pulley or sheave, with either two or three bearings as required, and with rails or with a sliding base which has provision for adjusting belt tension.

1.62.2 Engine Type

An engine-type generator consists of a stator, rotor "without shaft," foundation caps or sole plates, and brush rigging support. No base, bearings, shaft, shaft keys, or foundation bolts are included in generators of this type.

1.62.3 Coupled Type

A coupled-type generator consists of a generator with shaft extension for coupling and with one or two bearings.

1.63 DIRECT-CURRENT GENERATOR—COMPLETE

1.63.1 Belted Type

A belted-type generator consists of a generator with a shaft extension suitable for the driving pulley or sheave, with either two or three bearings as required, and with rails or with a sliding base which has provision for adjusting belt tension.

1.63.2 Engine Type

An engine-type generator consists of a field frame, armature (without shaft), foundation caps or sole plates (when required), and a brush rigging support. No base, bearings, shaft, shaft keys, or foundation bolts are included in generators of this type.

1.63.3 Coupled Type

A coupled-type generator consists of a generator with a shaft extension suitable for coupling, with either one or two bearings as required.

1.64 FACE AND FLANGE MOUNTING

1.64.1 Type C Face

A type C face-mounting machine has a male pilot (rabbet) fit with threaded holes in the mounting surface. The mounting surface shall be either internal or external to the pilot fit. (See Figure 4-3.)

1.64.2 Type D Flange

A Type D flange-mounting machine has a male pilot (rabbet) fit with clearance holes in the mounting surface. The mounting surface is external to the pilot fit. (See Figure 4-4.)

1.64.3 Type P Flange

A Type P flange-mounting machine has a female pilot (rabbet) fit with clearance holes in the mounting surface. The mounting surface is external to the pilot fit. (See Figure 4-5.)

Copyright National Electrical Manufacturers Association
Provided by IHS under license with NEMA
No reproduction or networking permitted without license from IHS

Not for Resale

CLASSIFICATION OF INSULATION SYSTEMS

1.65 INSULATION SYSTEM DEFINED

An insulation system is an assembly of insulating materials in association with the conductors and the supporting structural parts. All of the components described below that are associated with the stationary winding constitute one insulation system and all of the components that are associated with the rotating winding constitute another insulation system.

1.65.1 Coil Insulation with Its Accessories

The coil insulation comprises all of the insulating materials that envelop and separate the current-carrying conductors and their component turns and strands and form the insulation between them and the machine structure; including wire coatings, varnish, encapsulants, slot insulation, slot fillers, tapes, phase insulation, pole-body insulation, and retaining ring insulation when present.

1.65.2 Connection and Winding Support Insulation

The connection and winding support insulation includes all of the insulation materials that envelop the connections, which carry current from coil to coil, and from stationary or rotating coil terminals to the points of external circuit attachment; and the insulation of any metallic supports for the winding.

1.65.3 Associated Structural Parts

The associated structural parts of the insulation system include items such as slot wedges, space blocks and ties used to position the coil ends and connections, any nonmetallic supports for the winding, and field-coil flanges.

1.66 CLASSIFICATION OF INSULATION SYSTEMS

Insulation systems are divided into classes according to the thermal endurance of the system for temperature rating purposes. Four classes of insulation systems are used in motors and generators, namely, Classes A, B, F, and H. These classes have been established in accordance with IEEE Std 1.

Insulation systems shall be classified as follows.

Class A—An insulation system which, by experience or accepted test, can be shown to have suitable thermal endurance when operating at the limiting Class A temperature specified in the temperature rise standard for the machine under consideration.

Class B—An insulation system which, by experience or accepted test, can be shown to have suitable thermal endurance when operating at the limiting Class B temperature specified in the temperature rise standard for the machine under consideration.

Class F—An insulation system which, by experience or accepted test, can be shown to have suitable thermal endurance when operating at the limiting Class F temperature specified in the temperature rise standard for the machine under consideration.

Class H—An insulation system which, by experience or accepted test, can be shown to have suitable thermal endurance when operating at the limiting Class H temperature specified in the temperature rise standard for the machine under consideration.

"Experience," as used in this standard, means successful operation for a long time under actual operating conditions of machines designed with temperature rise at or near the temperature rating limit.

"Accepted test," as used in this standard, means a test on a system or model system which simulates the electrical, thermal, and mechanical stresses occurring in service.

Where appropriate to the construction, tests shall be made in accordance with the following applicable IEEE test procedures:

a. Std 43
b. Std 117
c. Std 275
d. Std 304

For other constructions for which tests have not been standardized, similar procedures shall be permitted to be used if it is shown that they properly discriminate between service-proven systems known to be different.

When evaluated by an accepted test, a new or modified insulation system shall be compared to an insulation system on which there has been substantial service experience. If a comparison is made on a system of the same class, the new system shall have equal or longer thermal endurance under the same test conditions; if the comparison is made with a system of a lower temperature class, it shall have equal or longer thermal endurance at an appropriately higher temperature. When comparing systems of different classes, an appropriate higher temperature shall be considered to be 25°C per class higher than the temperature for the base insulation system class.

MISCELLANEOUS

1.70 CODE LETTER

A code letter is a letter which appears on the nameplate of an alternating-current motor to show its locked-rotor kVA per horsepower. The letter designations for locked rotor kVA per horsepower are given in 10.37.

Copyright National Electrical Manufacturers Association
Provided by IHS under license with NEMA
No reproduction or networking permitted without license from IHS

Not for Resale

1.71 THERMAL PROTECTOR

A thermal protector is a protective device for assembly as an integral part of the machine and which, when properly applied, protects the machine against dangerous overheating due to overload and, in a motor, failure to start.

NOTE—The thermal protector may consist of one or more temperature sensing elements integral with the machine and a control device external to the machine.

1.72 THERMALLY PROTECTED

The words "thermally protected" appearing on the nameplate of a motor indicate that the motor is provided with a thermal protector.

1.73 OVER TEMPERATURE PROTECTION

For alternating-current medium motors, see 12.56.
For direct-current medium motors, see 12.79.

1.74 PART-WINDING START MOTOR

A part-winding start polyphase induction or synchronous motor is one in which certain specially designed circuits of each phase of the primary winding are initially connected to the supply line. The remaining circuit or circuits of each phase are connected to the supply in parallel with initially connected circuits, at a predetermined point in the starting operation. (See 14.37.)

1.75 STAR (WYE) START, DELTA RUN MOTOR

A star (wye) start, delta run polyphase induction or synchronous motor is one arranged for starting by connecting to the supply with the primary winding initially connected in star (wye), then reconnected in delta for running operation.

1.76 CONSTANT FLUX

Constant flux operation at any point occurs when the value of air gap magnetic flux is equal to the value which would exist at the base rating, i.e. rated voltage, frequency, and load.

1.80 MARKING ABBREVIATIONS FOR MACHINES

When abbreviations are used for markings which are attached to the motor or generator (rating plates, connections, etc.), they shall consist of capital letters because the conventional marking machines provide only numbers and capital letters and shall be in accordance with the following.

Abbreviation	Marking Indicated
A	Ampere
AC	Alternating current
AMB	Ambient
AO	Air over
ARM	Armature
BB	Ball bearing
BRG	Bearing
C	Celsius (Centigrade), degrees
CAP	Capacitor
CCW	Counterclockwise
CL	Class or classification
CODE	Code letter
CONN	Connection
CONT	Continuous
CFM	Cubic feet per minute
COMM	Commutating (interpole)
COMP	Compensating
CPD	Compound
C/S	Cycles per second
CW	Clockwise
DC	Direct current
DIAG	Diagram
EFF	Efficiency
ENCL	Enclosure
EXC	Exciter or Excitation
F	Fahrenheit, degrees
FF	Form Factor
FHP	Fractional horsepower
FLA	Full load amperes
FLD	Field
FR	Frame
FREQ	Frequency
GEN	Generator
GPM	Gallons per minute
GPS	Gallons per second
H	Henry
HI	High
HP	Horsepower
HR	Hour
HZ	Hertz
IND	Inductance or Induction
INS	Insulation System Class
KVA	Kilovolt-ampere
KVAR	Reactive Kilovolt-ampere
KW	Kilowatt
L*	Line
LB-FT	Pound-feet
LO	Low
LRA	Locked rotor amperes
MAX	Maximum
MFD	Microfarad
MG	Motor-generator
MH	Milihenry
HMP	Milihorsepower
MIN	Minimum
MIN	Minute

*Shall be permitted to be used in conjunction with a number.

Copyright National Electrical Manufacturers Association
Provided by IHS under license with NEMA
No reproduction or networking permitted without license from IHS

Not for Resale

Abbreviation	Marking Indicated
MTR	Motor
NEMA or DES†	NEMA Design Letter
NO or #	Number
OZ-FT	Ounce-feet
OZ-IN	Ounce-in
PF	Power factor
PH	Phase, Phases or Number of Phases
PM	Permanent magnet
RB	Roller bearing
RECT	Rectifier or rectified
RES	Resistance
RHEO	Rheostat
RMS	Root mean square
ROT	Rotation
RPM	Revolutions per minute
RTD	Resistance temperature detector
SB	Sleeve bearing
SEC	Second (time)
SEC	Secondary
SER	Serial or serial number
SER	Series
SF	Service factor
SFA	Service factor amperes
SH	Shunt
SPL	Special
STAB	Stabilized or stabilizing
STD	Standard
TACH	Tachometer
TC	Thermocouple
TEMP	Temperature
TEMP RISE	Temperature rise
TERM	Terminal
TH	Thermometer
TIME	Time rating
TORQ	Torque
TYPE	Type
V	Volt(s) or Voltage
VA	Volt-amperes
VAR	Reactive volt-amperes
W	Watt
WDG	Winding
WT	Weight

†Used in conjunction with a letter.

Copyright National Electrical Manufacturers Association
Provided by IHS under license with NEMA
No reproduction or networking permitted without license from IHS

Not for Resale

Copyright National Electrical Manufacturers Association
Provided by IHS under license with NEMA
No reproduction or networking permitted without license from IHS

Not for Resale

CLASSIFICATION ACCORDING TO ENVIRONMENTAL PROTECTION AND METHODS OF COOLING

(Suggested Standard for Future Design)

Details of protection (IP) and methods of cooling (IC) are defined in Part 5 and Part 6, respectively. They conform to IEC Standards.

1.25a OPEN MACHINE (IP00, IC01)

An open machine is one having ventilating openings which permit passage of external cooling air over and around the windings of the machine. The term "open machine," when applied in large apparatus without qualification, designates a machine having no restriction to ventilation other than that necessitated by mechanical construction.

1.25.1a Dripproof Machine (IP12, IC01)

A dripproof machine is an open machine in which the ventilating openings are so constructed that successful operation is not interfered with when drops of liquid or solid particles strike or enter the enclosure at any angle from 0 to 15 degrees downward from the vertical.

The machine is protected against solid objects greater than 2 inches.

1.25.2a Splash-Proof Machine (IP13, IC01)

A splash-proof machine is an open machine in which the ventilating openings are so constructed that successful operation is not interfered with when drops of liquid or solid particles strike or enter the enclosure at any angle not greater than 60 degrees downward from the vertical.

The machine is protected against solid objects greater than 2 inches.

1.25.3a Semi-Guarded machine (IP10, IC01)

A semi-guarded machine is an open machine in which part of the ventilating openings in the machine, usually in the top half, are guarded as in the case of a "guarded machine" but the others are left open.

1.25.4a Guarded Machine (IP2, IC01)

A guarded machine is an open machine in which all openings giving direct access to live metal or rotating parts (except smooth rotating surfaces) are limited in size by the structural parts or by screens, baffles, grilles, expanded metal, or other means to prevent accidental contact with hazardous parts.

The openings in the machine enclosure shall be such that (1) a probe such as that illustrated in Figure 1-1a, when inserted through the openings, will not touch a hazardous rotating part; (2) a probe such as that illustrated in Figure 1-2a when inserted through the openings, will not touch film-coated wire; and (3) an articulated probe such as that illustrated in Figure 1-3a, when inserted through the openings, will not touch an uninsulated live metal part.

1.25.5a Dripproof Guarded Machine (IP22, IC01)

A dripproof guarded machine is a dripproof machine whose ventilating openings are guarded in accordance with 1.25.4a.

1.25.6a Open Independently Ventilated Machine (IC06)

An open independently ventilated machine is one which is ventilated by means of a separate motor-driven blower mounted on the machine enclosure. Mechanical protection shall be as defined in 1.25.1a to 1.25.5a, inclusive. This machine is sometimes known as a blower-ventilated machine.

1.25.7a Open Pipe-Ventilated Machine

An open pipe-ventilated machine is an open machine except that openings for the admission of the ventilating air are so arranged that inlet ducts or pipes can be connected to them. Open pipe-ventilated machines shall be self-ventilated (air circulated by means integral with the machine) (IC11) or forced-ventilated (air circulated by means external to and not a part of the machine) (IC17). Enclosures shall be as defined in 1.25.1a to 1.25.5a, inclusive.

1.25.8a Weather-Protected Machine

1.25.8.1a Type I (IC01)

A weather-protected Type I machine is a guarded machine with its ventilating passages so constructed as to minimize the entrance of rain, snow and air-borne particles to the electric parts.

1.25.8.2a Type II (IC01)

A weather-protected Type II machine shall have, in addition to the enclosure defined for a weather-protected Type I machine, its ventilating passages at both intake and discharge so arranged that high-velocity air and air-borne particles blown into the machine by storms or high winds can be discharged without entering the internal ventilating passages leading directly to the electric parts of the machine itself. The normal path of the ventilating air which enters the electric parts of the machine shall be so arranged by baffling or separate housings as to provide at least three abrupt changes in direction, none of which shall be less than 90 degrees. In addition, an area of low velocity not exceeding 600 feet per minute shall be provided in the intake air path to minimize the possibility of moisture or dirt being carried into the electric parts of the machine.

Copyright National Electrical Manufacturers Association
Provided by IHS under license with NEMA
No reproduction or networking permitted without license from IHS

Not for Resale

NOTE—Removable or otherwise easy to clean filters may be provided instead of the low velocity chamber.

1.26a TOTALLY ENCLOSED MACHINE (IP5X)

A totally enclosed machine is one so enclosed as to prevent the free exchange of air between the inside and outside of the case but not sufficiently enclosed to be termed air-tight and dust does not enter in sufficient quantity to interfere with satisfactory operation of the machine.

1.26.1a Totally Enclosed Nonventilated Machine (IP54, IC410)

A totally enclosed nonventilated machine is a frame-surface cooled totally enclosed machine which is only equipped for cooling by free convection.

1.26.2a Totally Enclosed Fan-Cooled Machine (IP14, IC411)

A totally enclosed fan-cooled machine is a frame-surface cooled totally enclosed machine equipped for self- exterior cooling by means of a fan or fans integral with the machine but external to the enclosing parts.

1.26.3a Totally Enclosed Fan-cooled Guarded Machine (IP54, IC411)

A totally-enclosed fan-cooled guarded machine is a totally-enclosed fan-cooled machine in which all openings giving direct access to the fan are limited in size by the design of the structural parts or by screens, grilles, expanded metal, etc., to prevent accidental contact with the

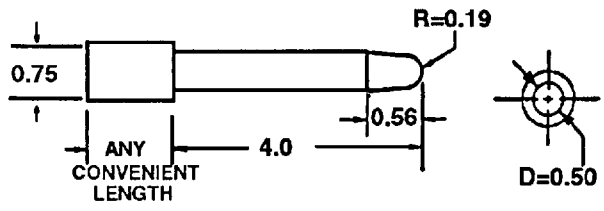

Figure 1-1a
PROBE FOR HAZARDOUS ROTATING PARTS

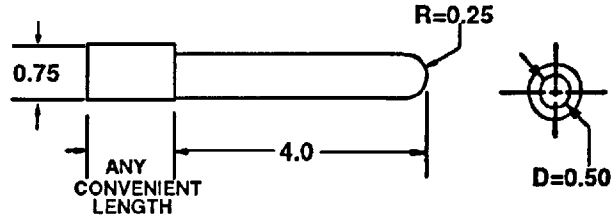

Figure 1-2a
PROBE FOR FILM-COATED WIRE

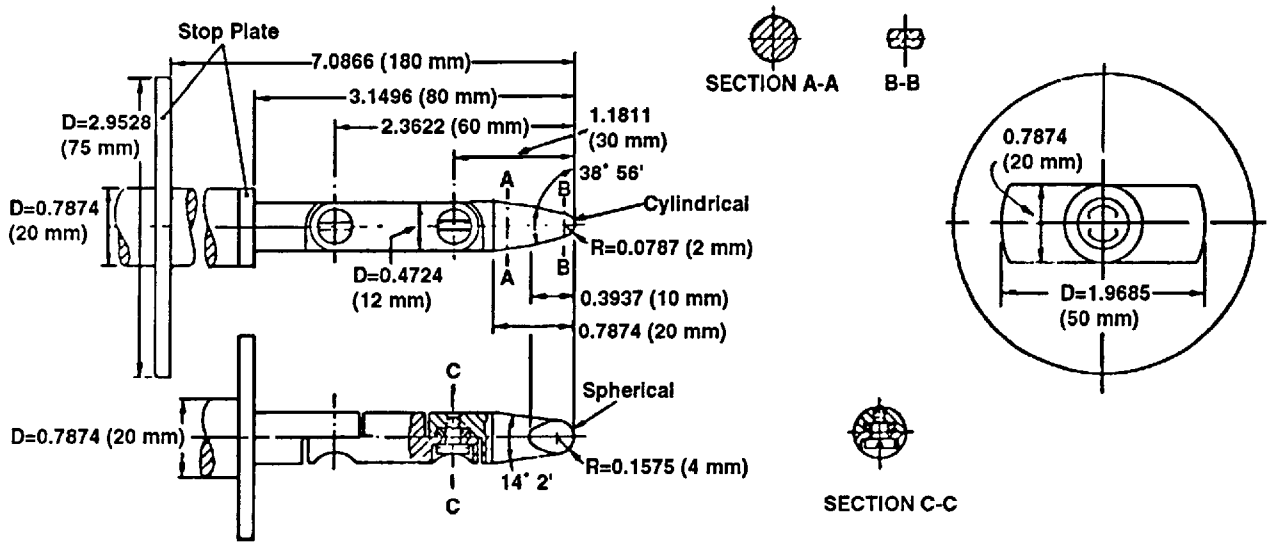

Figure 1-3a
ARTICULATE PROBE FOR UNINSULATED LIVE METAL PARTS
(Courtesy of IEC)

Copyright National Electrical Manufacturers Association
Provided by IHS under license with NEMA
No reproduction or networking permitted without license from IHS

Not for Resale

fan. Such openings shall not permit the passage of a cylindrical rod 0.75 inch diameter, and a probe such as that shown in Figure 1-1a shall not contact the blades, spokes, or other irregular surfaces of the fan.

1.26.4a Totally Enclosed Pipe-ventilated Machine (IP44)

A totally enclosed pipe-ventilated machine is a machine with openings so arranged that when inlet and outlet ducts or pipes are connected to them there is no free exchange of the internal air and the air outside the case. Totally enclosed pipe-ventilated machines may be self-ventilated (air circulated by means integral with the machine (IC31)) or forced-ventilated (air circulated by means external to and not a part of the machine (IC37)).

1.26.5a Totally Enclosed Water-cooled Machine (IP54)

A totally-enclosed water-cooled machine is a totally enclosed machine which is cooled by circulating water, the water or water conductors coming in direct contact with the machine parts.

1.26.6a Water Proof Machine (IP55)

A water-proof machine is a totally enclosed machine so constructed that it will exclude water applied in the form of a stream of water from a hose, except that leakage may occur around the shaft provided it is prevented from entering the oil reservoir and provision is made for automatically draining the machine. The means for automatic draining may be a check valve or a tapped hole at the lowest part of the frame which will serve for application of a drain pipe.

1.26.7a Totally Enclosed Air-to-Water-Cooled Machine (IP54)

A totally enclosed air-to-water-cooled machine is a totally enclosed machine which is cooled by circulating air which, in turn, is cooled by circulating water. It is provided with a water-cooled heat exchanger, integral (IC7_W) or machine mounted (IC8_W), for cooling the internal air and a fan or fans, integral with the rotor shaft (IC_1W) or separate (IC_5W) for circulating the internal air.

1.26.8a Totally Enclosed Air-to-Air-Cooled Machine (IP54)

A totally enclosed air-to-air-cooled machine is a totally enclosed machine which is cooled by circulating the internal air through a heat exchanger which, in turn, is cooled by circulating external air. It is provided with an air-to-air heat exchanger, integral (IC5_), or machine mounted (IC6_), for cooling the internal air and a fan or fans, integral with the rotor shaft (IC_1_) or separate (IC_5_) for circulating the internal air and a fan or fans, integral with the rotor shaft (IC_1), or separate, but external to the enclosing part or parts (IC_6), for circulating the external air.

1.26.9a Totally Enclosed Air-Over Machine (IP54, IC417)

A totally enclosed air-over machine is a totally enclosed frame-surface cooled machine intended for exterior cooling by a ventilating means external to the machine.

1.26.10a Explosion-Proof Machine[1]

An explosion-proof machine is a totally enclosed machine whose enclosure is designed and constructed to withstand an explosion of a specified gas or vapor which may occur within it and to prevent the ignition of the specified gas or vapor surrounding the machine by sparks, flashes or explosions of the specified gas or vapor which may occur within the machine casing.

1.26.11a Dust-Ignition-Proof Machine[2]

A dust-ignition proof machine is a totally enclosed machine whose enclosure is designed and constructed in a manner which will exclude ignitable amounts of dust or amounts which might affect performance or rating, and which will not permit arcs, sparks, or heat otherwise generated or liberated inside of the enclosure to cause ignition of exterior accumulations or atmospheric suspensions of a specific dust on or in the vicinity of the enclosure.

Successful operation of this type of machine requires avoidance of overheating from such causes as excessive overloads, stalling, or accumulation of excessive quantities of dust on the machine.

---

[1] See ANSI/NFPA 70, National Electrical Code, Article 500 - For Hazardous Locations, Class I, Groups A, B, C, or D.

[2] See ANSI/NFPA 70, National Electrical Code, Article 500 - For Hazardous Locations, Class II, Groups E, F, or G.

Copyright National Electrical Manufacturers Association
Provided by IHS under license with NEMA
No reproduction or networking permitted without license from IHS

Not for Resale

Copyright National Electrical Manufacturers Association
Provided by IHS under license with NEMA
No reproduction or networking permitted without license from IHS

Not for Resale

Section I
GENERAL STANDARDS APPLYING TO ALL MACHINES
Part 2
TERMINAL MARKINGS
GENERAL

2.01 LOCATION OF TERMINAL MARKINGS

Terminal markings shall be placed on or directly adjacent to terminals to which connections must be made from outside circuits or from auxiliary devices which must be disconnected for shipment. Wherever specified, color coding shall be permitted to be used instead of the usual letter and numeral marking.

2.02 TERMINAL MARKINGS

A combination of capital letters or symbols and an arabic numeral shall be used to indicate the character or function of the windings which are brought to the terminal.

The following letters and symbols shall be used for motors and generators and their auxiliary devices when they are included within or mounted on the machine.

Armature—A1, A2, A3, A4, etc.
Brake—B1, B2, B3, B4, etc.
Alternating-Current rotor windings (collector rings)[1]—M1, M2, M3, M4, etc.
Capacitor—J1, J2, J3, J4, etc.
Control signal lead attached to commutating winding—C
Dynamic braking resistor—BR1, BR2, BR3, BR4, etc.
Field (series)—S1, S2, S3, S4, etc.
Field (shunt)—F1, F2, F3, F4, etc.
Line—L1, L2, L3, L4, etc.
Magnetizing winding (for initial and maintenance magnetization and demagnetization of permanent magnet fields)—E1, E2, E3, E4, etc.

NOTE—E1, E3, or other odd-numbered terminals should be attached to the positive terminal of the magnetizing power supply for magnetization and to the negative terminal for demagnetization.

Resistance (armature and miscellaneous)—R1, R2, R3, R4, etc.
Resistance (shunt field adjusting)—V1, V2, V3, V4, etc,
Shunt braking resistor—DR1, DR2, DR3, DR4, etc.
Space heaters—H1, H2, H3, H4, etc.
Stator[1]—T1, T2, T3, T4, etc.
Starting switch—K
Thermal protector—P1, P2, P3, P4, etc.
Equalizing lead— = (equality sign)
Neutral connection—Terminal letter with numeral 0

For the significance of the arabic numeral, see 2.20 for alternating-current machines and 2.10 for direct-current machines.

2.03 DIRECTION OF ROTATION

2.03.1 Alternating-Current Machines

See 2.24.

2.03.2 Direct-Current Machines

See 2.12.

2.03.3 Motor-Generator Sets

When one motor and one generator are coupled together at their drive ends, the standard direction of rotation for both machines shall be as given for that type of machine and will apply to the motor-generator set without a change in connections.

The correct direction of rotation shall be clearly indicated on a motor-generator set.

When two or more machines are coupled together but not at their drive ends, the standard direction of rotation cannot apply to all machines in the set. Changes in connections will be necessary for those machines operating in the opposite direction of rotation.

DC MOTORS AND GENERATORS

2.10 TERMINAL MARKINGS

2.10.1 The markings comprising letters and numbers on the terminals of a direct-current machine shall indicate the relation of circuits within the machine.

2.10.2 When an armature lead passes through the commutating or compensating field, or any combination of these fields, before being brought out for connection to the external circuit, the terminal marking of this lead shall be an "A." When an armature lead passes through a series field and all internal connections are permanently made,

[1] For alternating-current machines only.

Copyright National Electrical Manufacturers Association
Provided by IHS under license with NEMA
No reproduction or networking permitted without license from IHS
Not for Resale

the lead brought out shall be marked with an appropriate "S" designation. If an equalizer lead for paralleling purposes is brought out, it shall be marked with an = (equality sign).

2.10.3 All numerals shall be determined on the following fundamental basis. The numerals of all the terminals of direct-current machines shall be selected so that when the direction of current in any single excitation winding is from a lower to a higher numeral, the voltage generated (counter electromotive force in a motor) in the armature from this excitation shall, for counterclockwise rotation facing the end opposite the drive, make armature terminal A1 positive and A2 negative. With excitation applied in the same manner, the opposite rotation will result in A2 being positive and A1 negative.

In accordance with the fundamental basis, a standard direction of rotation direct-current motor or generator (as defined in 2.12) with a single field winding will have current flow in both armature and field circuits in the same direction with respect to the numeral sequence. Any other accumulative field winding will have current flow with respect to its numeral sequence in the same direction as the current in the main field winding. Any differential field winding will have current direction with respect to its numeral sequence in the opposite direction to the current flow in the main field.

2.11 TERMINAL MARKINGS FOR DUAL VOLTAGE SHUNT FIELDS

When a separately excited shunt field winding is reconnectable series-parallel for dual voltage, the terminal markings shall be as shown in Figure 2-1.



Figure 2-1
SEPARATELY EXCITED SHUNT FIELD WINDING FOR SERIES-PARALLEL DUAL VOLTAGE

Voltage	Join	Connect to Supply
Low	———	(F1, F3) (F2, F4)
High	(F2, F3)	(F1, F4)

2.12 DIRECTION OF ROTATION

2.12.1 Direct-Current Motors

The standard direction of shaft rotation for direct-current motors shall be counterclockwise facing the end opposite the drive.

The direction of shaft rotation of direct-current motors depends on the relative polarities of the field and armature and, therefore, if the polarities of both are reversed, the direction of rotation will be unchanged. Since the field excitation of direct-current motors is obtained from an external source, residual magnetism has no practical effect on polarity except for those with permanent magnet excitation. Reversal of the shaft rotation of a direct-current motor is obtained by a transposition of the two armature leads or by a transposition of the field leads. With such reversed shaft rotation (clockwise) and when the polarity of the power supply is such that the direction of the current in the armature is from terminal 2 to terminal 1, the current will be flowing in the field windings from terminal 1 to terminal 2, and vice versa.

2.12.2 Direct-Current Generators

The standard direction of shaft rotation for direct-current generators shall be clockwise facing the end opposite the drive.

The direction of rotation of a generator mounted as a part of an engine-generator set is usually counterclockwise facing the end opposite the drive.

Self-excited direct-current generators, with connections properly made for standard direction of shaft rotation (clockwise), will not function if driven counterclockwise as any small current delivered by the armature tends to demagnetize the fields and thus prevent the armature from delivering current. If the conditions call for reversed direction of shaft rotation, connections should be made with either the armature leads transposed or the field leads transposed. The polarity of a self-excited direct-current generator, with accompanying direction of current flow in the several windings, is determined by the polarity of the residual magnetism. An accidental or unusual manipulation may reverse this magnetic polarity. Though the generator itself will function as well with either polarity, an unforeseen change may cause disturbance or damage to other generators or devices when the generator is connected to them.

2.12.3 Reverse Function

A direct-current machine can be used either as a generator or as a motor if the field design is suitable for such operation. (The manufacturer should be consulted regarding this.) For the desired direction of rotation, connection changes may be necessary. The conventions for current flow in combination with the standardization of opposite directions of rotation for direct-current generators and

Copyright National Electrical Manufacturers Association
Provided by IHS under license with NEMA
No reproduction or networking permitted without license from IHS

Not for Resale

direct-current motors are such that any direct-current machine can be called "generator" or "motor" without a change in terminal markings.

2.13 CONNECTION DIAGRAMS WITH TERMINAL MARKINGS FOR DIRECT-CURRENT MOTORS

The connection diagrams with terminal markings for direct-current motors shall be as shown in Figures 2-2 through 2-9.

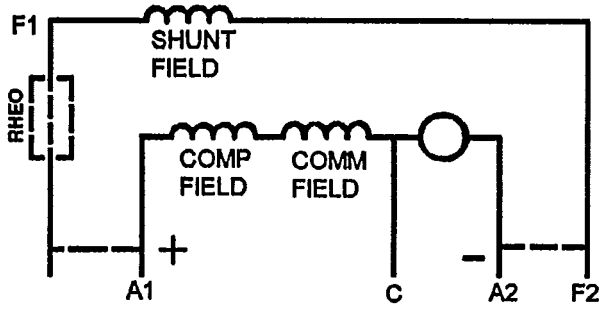

Figure 2-2
SHUNT-MOTOR—COUNTERCLOCKWISE ROTATION FACING END OPPOSITE DRIVE, CLOCKWISE ROTATION FACING DRIVE END

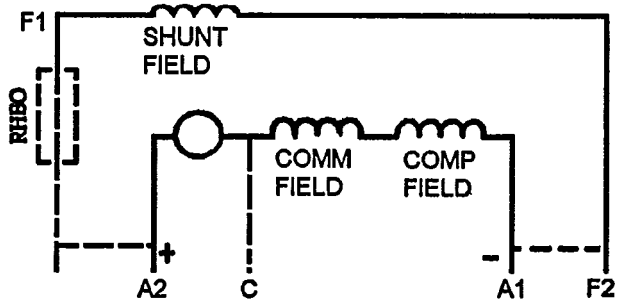

Figure 2-3
SHUNT MOTOR—CLOCKWISE ROTATION FACING END OPPOSITE DRIVE, COUNTERCLOCKWISE ROTATION FACING DRIVE END

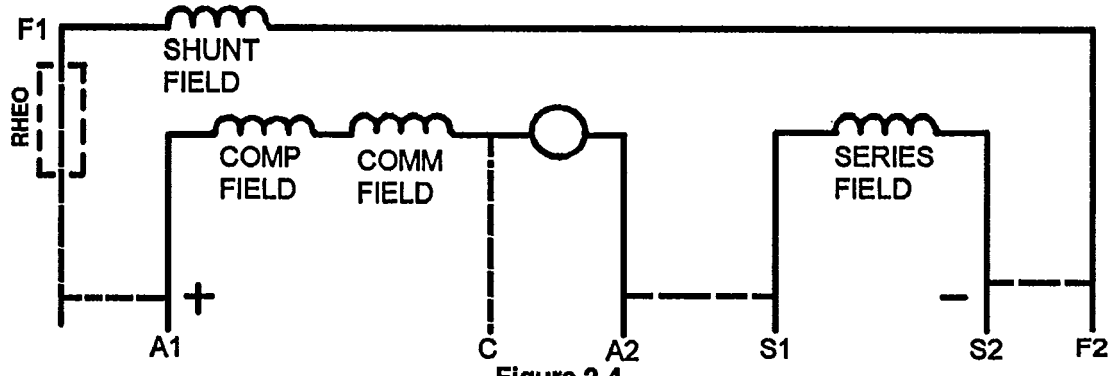

Figure 2-4
COMPOUND OR STABILIZED SHUNT MOTOR—COUNTERCLOCKWISE ROTATION FACING END OPPOSITE DRIVE, CLOCKWISE ROTATION FACING DRIVE END

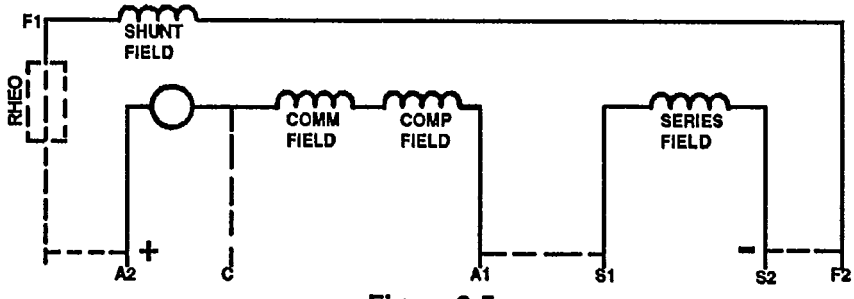

Figure 2-5
COMPOUND OR STABILIZED SHUNT MOTOR—CLOCKWISE ROTATION FACING END OPPOSITE DRIVE, COUNTERCLOCKWISE ROTATION FACING DRIVE END

Copyright National Electrical Manufacturers Association
Provided by IHS under license with NEMA
No reproduction or networking permitted without license from IHS
Not for Resale

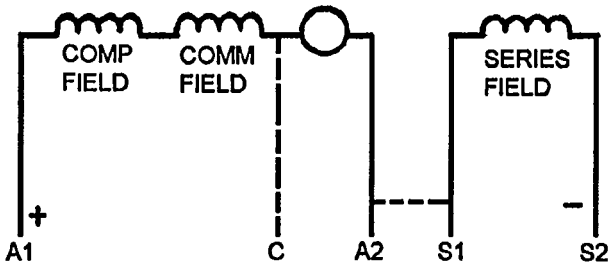

Figure 2-6
SERIES MOTOR—COUNTERCLOCKWISE ROTATION FACING END OPPOSITE DRIVE, CLOCKWISE ROTATION FACING DRIVE END

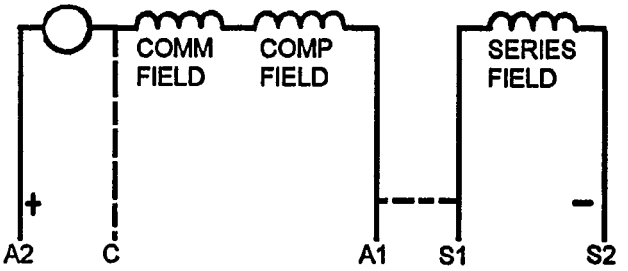

Figure 2-7
SERIES MOTOR—CLOCKWISE ROTATION FACING END OPPOSITE DRIVE, COUNTER CLOCKWISE ROTATION FACING DRIVE END

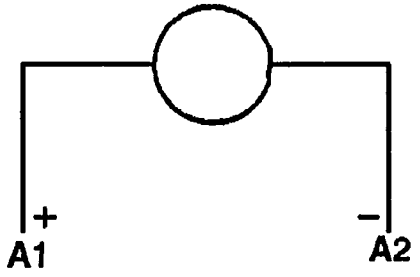

Figure 2-8*
PERMANENT MAGNET MOTOR—COUNTERCLOCKWISE ROTATION FACING END OPPOSITE DRIVE, CLOCKWISE ROTATION FACING DRIVE END

*When magnetizing windings are provided, see 2.02.

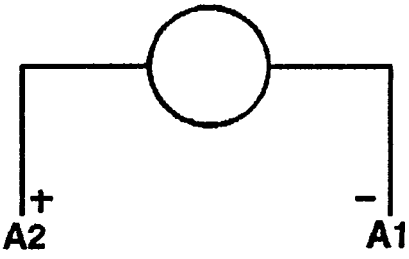

Figure 2-9*
PERMANENT MAGNET MOTOR—CLOCKWISE ROTATION FACING END OPPOSITE DRIVE, COUNTERCLOCKWISE ROTATION FACING

*When magnetizing windings are provided, see 2.02.

When connections between different windings are made permanently inside the machine, any lead brought out of the machine from the junction (except a control lead) shall bear the terminal markings of all windings to which it is connected except that no markings shall be included for commutating and compensating fields.

These connection diagrams show all leads from the armature, the shunt field, and the series (or stabilizing) field brought out of the machines. The same diagram is, therefore, applicable for reversing the nonreversing motors. The dotted connections may be made inside the machine or outside the machine as conditions require. The relationship between the terminal marking numbers, the relative polarity of the windings, and the direction of rotation is in accordance with 2.12, but the polarities shown in these connection diagrams, while preferred, are not standardized.

NOTES

1—See 2.02 for terminal letters assigned to different types of windings and 2.10.3 for the significance of the numerals.

2—The connections shown are for cumulative series fields. Differential connection of the series field in direct-current motors is very seldom used but when required, no change should be made on the field leads or terminal markings on the machine, but the connection of the series field to the armature should be shown reversed.

3—Commutating, compensating, and series field windings are shown on the A1 side of the armature but this location while preferred, is not standardized. If sound engineering, sound economics, or convenience so dictates, these windings may be connected on either side of the armature or may be divided part on one side and part on the other.

4—For shunt wound, stabilized-shunt-wound, and compound-wound motors, the shunt field may be either connected in parallel with the armature as shown by the dotted lines or may be separately excited. When separately excited, the shunt field is usually isolated from the other windings of the machine, but the polarity of the voltage applied to the shunt field should be as shown for the particular rotation and armature and series field polarities.

5—When the compensation field or both the commutating and the compensating fields are omitted from any machine, the terminal markings do not change.

6—The lead designated by C, if used, is for control purposes and would not be used in any machine which has neither commutating nor compensating fields. In utilizing this terminal, the location of the commutating or compensating field should be known. See Note 3.

7—The position of the field rheostat shown in these diagrams does not indicate any preference. The field rheostat may be attached to either terminal of the shunt field.

Copyright National Electrical Manufacturers Association
Provided by IHS under license with NEMA
No reproduction or networking permitted without license from IHS

Not for Resale

2.14 CONNECTION DIAGRAMS WITH TERMINAL MARKINGS FOR DIRECT-CURRENT GENERATORS

The connection diagrams with terminal markings for direct-current generators shall be as shown in Figures 2-10 through 2-13.

When connections between different windings are made permanently inside the machine, any lead brought out of the machine from the junction (except an equalizer or control lead) shall bear the terminal markings of all windings to which it is connected except that no markings shall be included for commutating and compensating fields.

These connection diagrams show all leads from the armature, the shunt field, and the series field brought out of the machines. The dotted connections may be made inside the machine or outside the machine as conditions require. The relationship between the terminal marking numbers, the relative polarity of the windings, and the direction of rotation is in accordance with 2.12, but the polarities shown in these connection diagrams, while preferred, are not standardized.

NOTES

1—See 2.02 for terminal letters assigned to different types of windings and 2.10.3 for the significance of the numerals.

2—The connections shown are for cumulative series fields. For differential connection of the series fields, no change should be made on the field leads or terminal markings on the machine, but the connection of the series field to the armature should be shown reversed.

3—Commutating, compensating, and series field windings are shown on the A1 side of the armature, but this location, while preferred, is not standardized. If sound engineering, sound economics, or convenience so dictates, these windings may be connected on either side of the armature or may be divided part on one side and part on the other.

4—Figures 2-12 and 2-13 show the shunt field connected either inside or outside the series field. Either may be used depending upon the desired characteristics.

5—For shunt-wound generators and compound-wound generators, the shunt-field may be either self-excited or separately excited. When self-excited, connections should be made as shown by the dotted lines. When separately excited, the shunt field is usually isolated from the other windings of the machine, but the polarity of the voltage applied to the shunt field should be as shown for the particular rotation and armature polarity.

6—When the compensating field or commutating field, or both, and the compensating fields are omitted from any machine, the terminal markings do not change.

7—The terminal designated by C, if used, is for control purposes and would not be used in any machine which has neither commutating not compensating fields. In utilizing this terminal, the location of the commutating or compensating field should be known. See Note 3.

8—The position of the field rheostat shown in these diagrams does not indicate any preference. The field rheostat may be attached to either terminal of the shunt field.

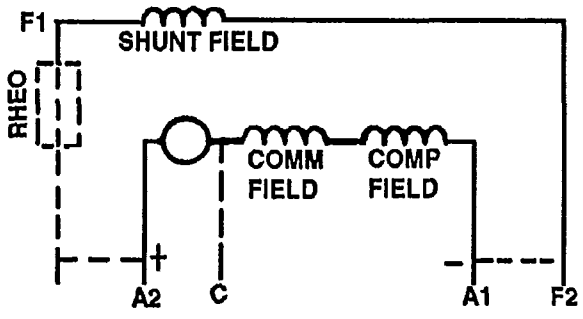

Figure 2-10
SHUNT GENERATOR—CLOCKWISE ROTATION FACING END OPPOSITE DRIVE, COUNTERCLOCKWISE ROTATION FACING DRIVE END

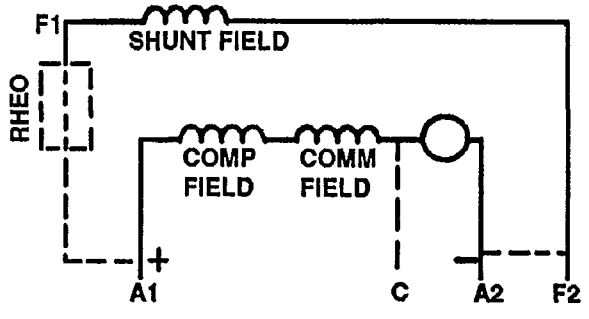

Figure 2-11
SHUNT GENERATOR—COUNTERCLOCKWISE ROTATION FACING END OPPOSITE DRIVE, CLOCKWISE ROTATION FACING DRIVE END

Copyright National Electrical Manufacturers Association
Provided by IHS under license with NEMA
No reproduction or networking permitted without license from IHS
Not for Resale

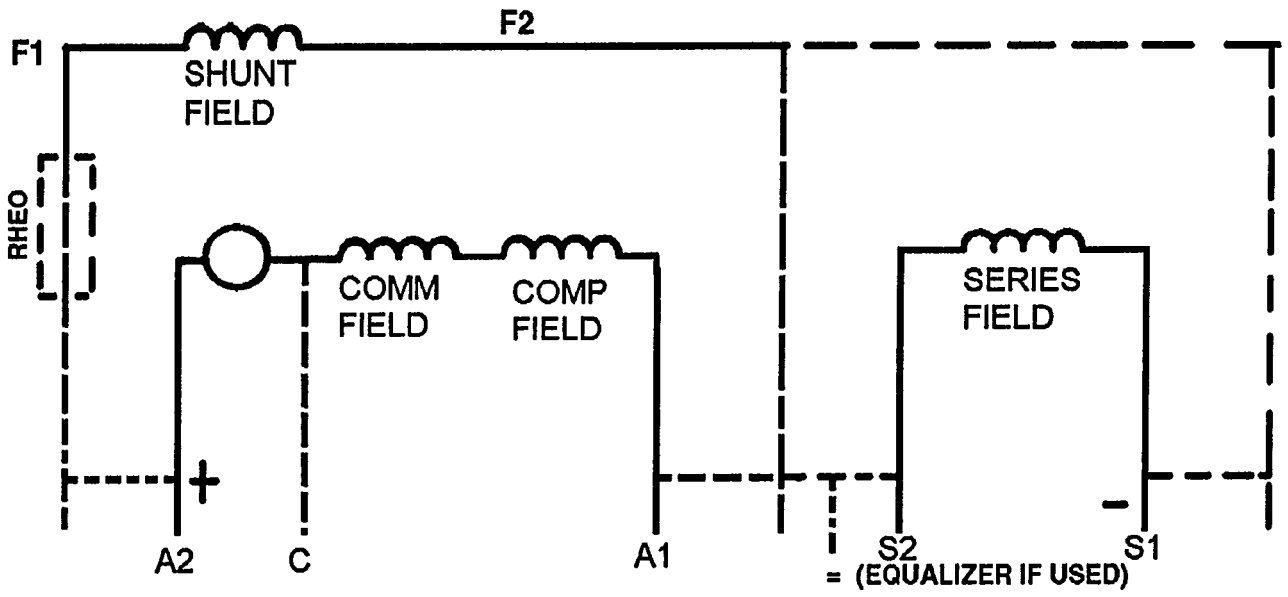

Figure 2-12
COMPOUND GENERATOR—CLOCKWISE ROTATION FACING END OPPOSITE DRIVE, COUNTERCLOCKWISE ROTATION FACING DRIVE END

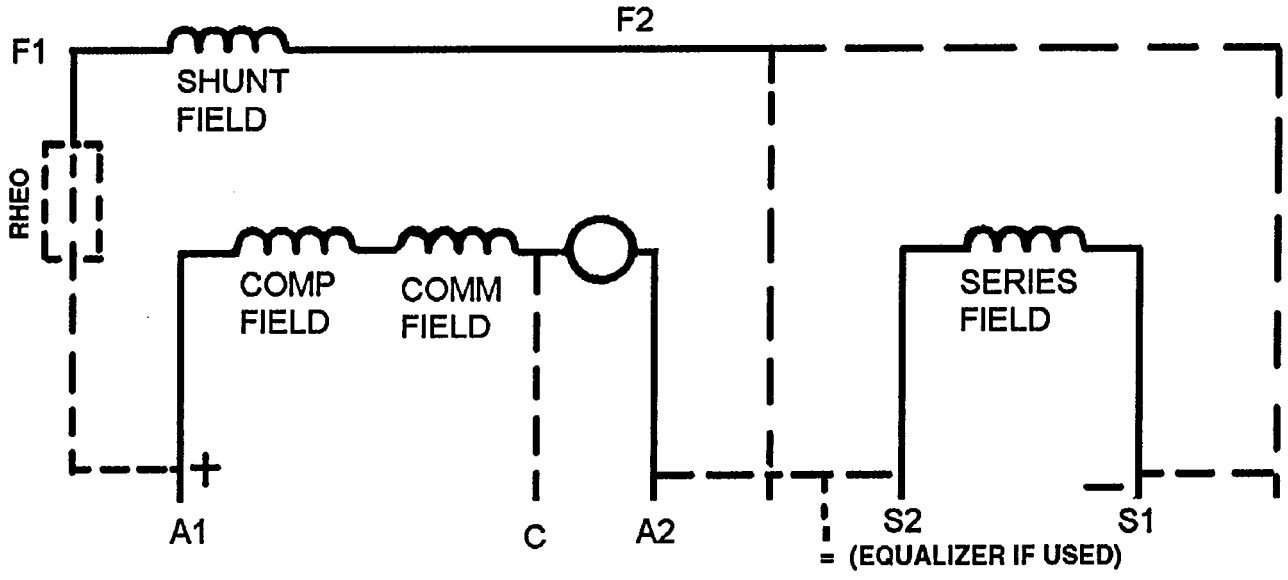

Figure 2-13
COMPOUND GENERATOR—COUNTERCLOCKWISE ROTATION FACING END OPPOSITE DRIVE, CLOCKWISE ROTATION FACING DRIVE END

Copyright National Electrical Manufacturers Association
Provided by IHS under license with NEMA
No reproduction or networking permitted without license from IHS

Not for Resale

AC MOTORS AND GENERATORS

2.20 NUMERALS ON TERMINALS OF ALTERNATING-CURRENT POLYPHASE MACHINES

2.20.1 Synchronous Machines

The numerals 1, 2, 3, etc., indicate the order in which the voltages at the terminals reach their maximum positive values (phase sequence) with clockwise shaft rotation when facing the connection end of the coil windings; hence, for counterclockwise shaft rotation (not standard) when facing the same end, the phase sequence will be 1, 3, 2.

2.20.2 Induction Machines

Terminal markings of polyphase induction machines are not related to the direction of rotation.

2.21 DEFINITION OF PHASE SEQUENCE

Phase sequence is the order in which the voltages successively reach their maximum positive values between terminals.

2.22 PHASE SEQUENCE

The order of numerals on terminal leads does not necessarily indicate the phase sequence, but the phase sequence is determined by the direction of shaft rotation relative to the connection end of the coil winding.

2.23 DIRECTION OF ROTATION OF PHASORS

Phasor diagrams shall be shown so that advance in phase of one phasor with respect to another is in the counterclockwise direction. See Figure 2-14 in which phasor 1 is 120 degrees in advance of phasor 2 and the phase sequence is 1, 2, 3. (See 2.21.)

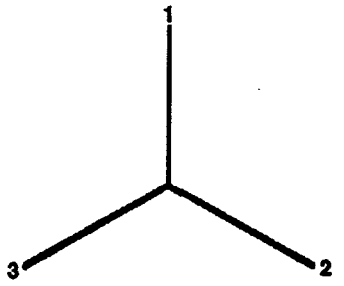

Figure 2-14
ROTATION OF PHASORS

2.24 DIRECTION OF ROTATION

The standard direction of rotation for alternating-current generators is clockwise when facing the end of the machine opposite the drive.

The direction of rotation of a generator mounted as a part of an engine-generator set is usually counterclockwise when facing the end opposite the drive.

The standard direction of rotation for all alternating current single-phase motors, all synchronous motors, and all universal motors shall be counterclockwise when facing the end of the machine opposite the drive.

2.25 REVERSAL OF ROTATION, POLARITY AND PHASE SEQUENCE

Alternating-Current generators driven counterclockwise when facing the connection end of the coil windings will generate without change in connections, but the terminal phase sequence will be 1, 3, 2.

Synchronous condensers and synchronous motors may be operated with counterclockwise shaft rotation viewed from the connection end of the coil windings by connecting them to leads in which the phase sequence is 1, 2, 3, in the following manner.

Power leads	1, 2, 3
Machine terminals	1, 3, 2

AC GENERATORS AND SYNCHRONOUS MOTORS

2.30 CONNECTIONS AND TERMINAL MARKINGS-ALTERNATING-CURRENT GENERATORS AND SYNCHRONOUS MOTORS—THREE-PHASE AND SINGLE-PHASE

The alternating-current windings of three-phase alternating-current generators and synchronous motors shall have terminal markings as given in 2.61 for three phase single-speed induction motors.

The alternating-current windings of single-phase alternating-current generators and synchronous motors shall have terminal markings as given in Figure 2-15.

The terminal markings of direct-current field windings shall be F1 and F2.

NOTE—See 2.02 for terminal letters assigned to different types of windings and 2.20 for the significance of the numerals.

Copyright National Electrical Manufacturers Association
Provided by IHS under license with NEMA
No reproduction or networking permitted without license from IHS

Not for Resale

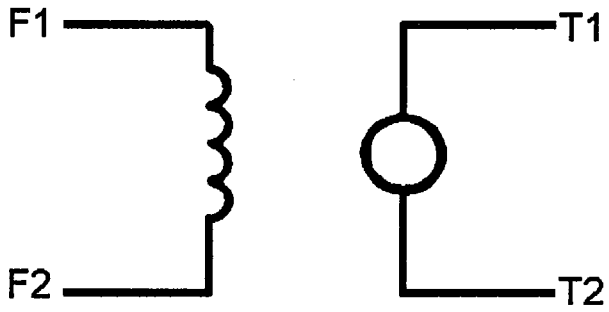

Figure 2-15
SINGLE PHASE

SINGLE-PHASE MOTORS

2.40 GENERAL

2.40.1 Dual Voltage

Regardless of type, when a single-phase motor is reconnectible series-parallel for dual voltage, the terminal marking shall be determined as follows.

For the purpose of assigning terminal markings, the main winding is assumed to be divided into two halves, and T1 and T2 shall be assigned to one half and T3 and T4 to the other half.

For the purpose of assigning terminal markings, the auxiliary winding (if present) is assumed to be divided into two halves, and T5 and T6 shall be assigned to one half and T7 and T8 to the other half.

Polarities shall be established so that the standard direction of rotation (counterclockwise facing the end opposite the drive) is obtained when the main winding terminal T4 and the auxiliary winding terminal T5 are joined or when an equivalent circuit connection is made between the main and auxiliary winding.

The terminal marking arrangement is shown diagrammatically in Figure 2-16.

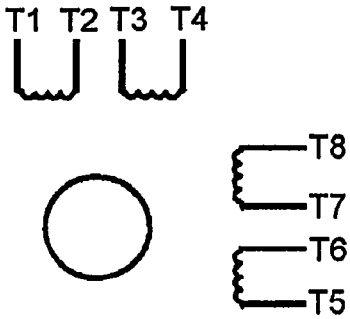

Figure 2-16
DUAL VOLTAGE

2.40.2 Single Voltage

If a single-phase motor is single voltage or if either winding is intended for only one voltage, the terminal marking shall be determined as follows.

T1 and T4 shall be assigned to the main winding and T5 and T8 to the auxiliary winding (if present) with the polarity arrangement such that the standard direction of rotation is obtained if T4 and T5 are joined to one line and T1 and T8 to the other.

The terminal marking arrangement is shown diagrammatically in Figure 2-17.

NOTES

1—It has been found to be impracticable to follow this standard for the terminal markings of some definite-purpose motors. See Part 18.

2—No general standards have been developed for terminal markings of multispeed motors because of the great variety of methods employed to obtain multiple speeds.

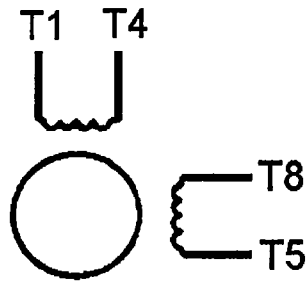

Figure 2-17
SINGLE VOLTAGE

2.41 TERMINAL MARKINGS IDENTIFIED BY COLOR

When single-phase motors use lead colors instead of letter and number markings to identify the leads, the color assignment shall be determined from the following:

T1—Blue
T2—White
T3—Orange
T4—Yellow
T5—Black
T8—Red

Copyright National Electrical Manufacturers Association
Provided by IHS under license with NEMA
No reproduction or networking permitted without license from IHS

Not for Resale

P1—No color assigned
P2—Brown

NOTE—It has been found to be impracticable to follow this standard for the lead markings of some definite-purpose motors. See Part 18.

2.42 AUXILIARY DEVICES WITHIN MOTOR

The presence of an auxiliary device or devices, such as a capacitor, starting switch, thermal protector, etc., permanently connected in series between the motor terminal and the part of the winding to which it ultimately connects, shall not affect the marking unless a terminal is provided at the junction.

Where a terminal is provided at the junction, the terminal marking of this junction shall be determined by the part of the winding to which it is connected. Any other terminals connected to this auxiliary device shall be identified by a letter indicating the auxiliary device within the motor to which the terminal is connected.

2.43 AUXILIARY DEVICES EXTERNAL TO MOTOR

Where the capacitors, resistors, inductors, transformers, or other auxiliary devices are housed separately from the motor, the terminal markings shall be those established for the device.

2.44 MARKING OF RIGIDLY MOUNTED TERMINALS

On a terminal board, the identification of rigidly mounted terminals shall be either by marking on the terminal board or by means of a diagram attached to the machine. When all windings are permanently connected to rigidly-mounted terminals, these terminals may be identified in accordance with the terminal markings specified in this publication. When windings are not permanently attached to rigidly mounted terminals on a terminal board, the rigidly mounted terminals shall be identified by numbers only, and the identification need not coincide with that of the terminal leads connected to the rigidly mounted terminals.

2.45 INTERNAL AUXILIARY DEVICES PERMANENTLY CONNECTED TO RIGIDLY MOUNTED TERMINALS

If the motor design is such that the starting switch, thermal protector, or other auxiliary device is permanently connected to a rigidly mounted terminal, some variation from the connection arrangements illustrated in 2.47 through 2.53 will be required. However, any variations shall be based on the provisions of 2.46.

2.46 GENERAL PRINCIPLES FOR TERMINAL MARKINGS FOR SINGLE-PHASE MOTORS

The terminal marking and connection procedure given in 2.40 through 2.45 and in the schematic diagrams which follow are based on the following principles.

2.46.1 First Principle

The main winding of a single-phase motor is designated by T1, T2, T3, and T4 and the auxiliary winding by T5, T6, T7, and T8 to distinguish it from a quarter-phase motor which uses odd numbers for one phase and even numbers for the other phase.

2.46.2 Second Principle

By following the first principle, it follows that odd-to-odd numbered terminals of each winding are joined for lower voltage (parallel) connection and odd-to-even numbered terminals of each winding are joined for higher voltage (series) connection.

2.46.3 Third Principle

The rotor of a single-phase motor is represented by a circle, even though there are no external connections to it. It also serves to distinguish the single-phase motor schematic diagram from that of the quarter-phase motor in which the rotor is never represented.

Copyright National Electrical Manufacturers Association
Provided by IHS under license with NEMA
No reproduction or networking permitted without license from IHS
Not for Resale

Copyright National Electrical Manufacturers Association
Provided by IHS under license with NEMA
No reproduction or networking permitted without license from IHS

2.47 SCHEMATIC DIAGRAMS FOR SPLIT-PHASE MOTORS—SINGLE VOLTAGE—REVERSIBLE

2.47.1 Without Thermal Protector[1]

Line Leads		
	L1	L2
Counter-clockwise rotation	T1, T8	T4, T5
Clockwise rotation	T1, T5	T4, T8

Figure 2-18

Terminal Board[2]
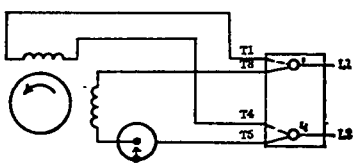

To obtain clockwise rotation, interchange leads T5 and T8.

Figure 2-19.a

Terminal Board[2]
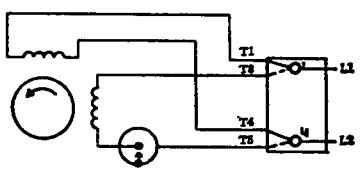

To obtain clockwise rotation, interchange leads T1 and T4.

Figure 2-19.b

2.47.2 With Thermal Protector[1]

Line Leads			
	L1	L2	Join
Counter-clockwise rotation	P1	T4, T5	T1, T8
Clockwise rotation	P1	T4, T8	T1, T5

Figure 2-20

Terminal Board[2]
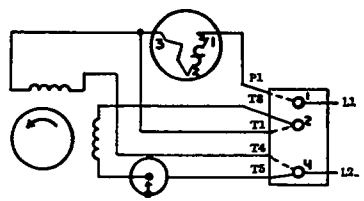

To obtain clockwise rotation, interchange leads T5 and T8.

Figure 2-21.a

Terminal Board[2]
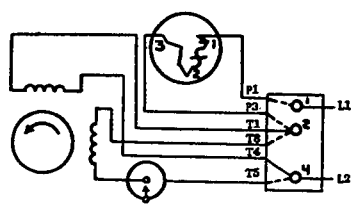

To obtain clockwise rotation, interchange leads T1 and T4.

Figure 2-21.b

[1]Motor starting switch shown in running position. All directions of rotation shown are facing the end opposite the drive.
[2]Terminal boards are shown viewed from the front. Dotted lines indicate permanent connection.

Not for Resale

Copyright National Electrical Manufacturers Association
Provided by IHS under license with NEMA
No reproduction or networking permitted without license from IHS

2.48 SCHEMATIC DIAGRAMS FOR CAPACITOR-START MOTORS—REVERSIBLE

2.48.1 Single-voltage Capacitor-start Motors—Reversible

2.48.1.1 SINGLE VOLTAGE—WITHOUT THERMAL PROTECTOR[1]

Line Leads	Terminal Board[2]
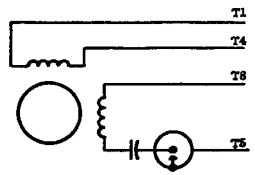	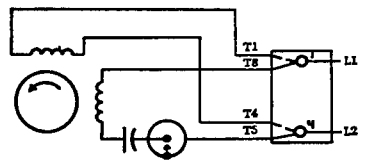
	To obtain clockwise rotation, interchange leads T5 and T8.
	Figure 2-23.a
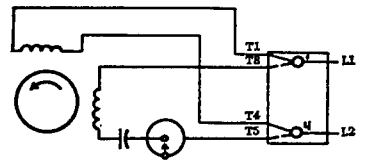	
	To obtain clockwise rotation, interchange leads T1 and T4.
	Figure 2-23.b

	L1	L2
Counter-clockwise rotation	T1, T8	T4, T5
Clockwise rotation	T1, T5	T4, T8

Figure 2-22

2.48.1.2 SINGLE VOLTAGE—WITH THERMAL PROTECTOR[1]

Line Leads	Terminal Board[2]
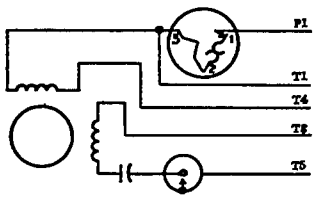	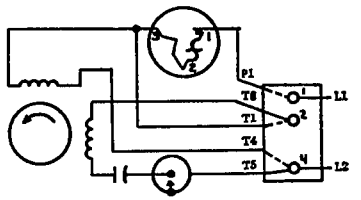
	To obtain clockwise rotation, interchange leads T5 and T8.
	Figure 2-25.a
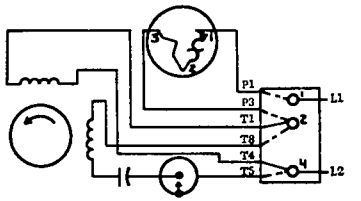	
	To obtain clockwise rotation, interchange leads T1 and T4.
	Figure 2-24.b

	L1	L2	Join
Counter-clockwise rotation	P1	T4, T5	T1, T8
Clockwise rotation	P1	T4, T8	T1, T5

Figure 2-24

[1]Motor starting switch shown in running position. All directions of rotation shown are facing the end opposite the drive.
[2]Terminal boards are shown viewed from the front. Dotted lines indicate permanent connection.

Not for Resale

2.48.2 Dual-voltage Capacitor-start Motors—Reversible

2.48.2.1 DUAL VOLTAGE—WITHOUT THERMAL PROTECTOR[1]

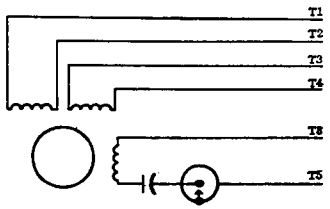

		Line Leads L1	Line Leads L2	Line Leads Join
Higher nameplate voltage	Counter-clockwise rotation	T1	T4, T5	T2, T3, and T8
	Clockwise rotation	T1	T4, T8	T2, T3, and T5
Lower nameplate voltage	Counter-clockwise rotation	T1, T3, T8	T2, T4, T5	
	Clockwise rotation	T1, T3, T5	T2, T4 T8	

Figure 2-26

Terminal Board[2]

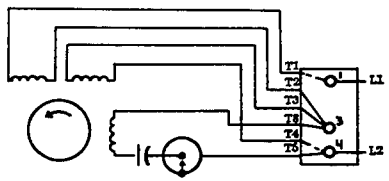

To obtain clockwise rotation, interchange leads T5 and T8.

Figure 2-27.a
HIGHER NAMEPLATE VOLTAGE

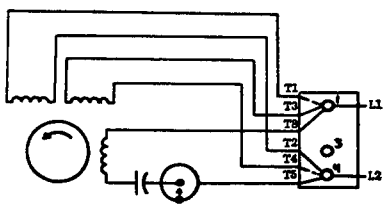

To obtain clockwise rotation, interchange leads T5 and T8.

Figure 2-27.b
LOWER NAMEPLATE VOLTAGE

Terminal Board with Links[2]

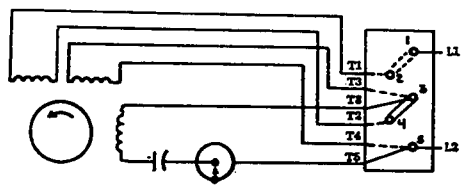

To obtain clockwise rotation, interchange leads T5 and T8.

Figure 2-27.a
HIGHER NAMEPLATE VOLTAGE

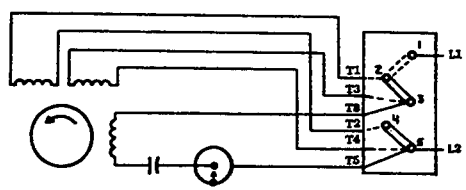

To obtain clockwise rotation, interchange leads T5 and T8.

Figure 2-28.a
LOWER NAMEPLATE VOLTAGE

[1]Motor starting switch shown in running position. All directions of rotation shown are facing the end opposite the drive.
[2]Terminal boards are shown viewed from the front. Dotted lines indicate permanent connection.

Copyright National Electrical Manufacturers Association
Provided by IHS under license with NEMA
No reproduction or networking permitted without license from IHS
Not for Resale

Copyright National Electrical Manufacturers Association
Provided by IHS under license with NEMA
No reproduction or networking permitted without license from IHS
Not for Resale

2.48.2.2 DUAL VOLTAGE—WITH THERMAL PROTECTOR

2.48.2.2.1 GROUP I—DUAL VOLTAGE—WITH THERMAL PROTECTOR[1]

The design proportions for dual-voltage reversible capacitor-start motors are such that three different groups of diagrams are necessary to show the means for obtaining adequate protection for these motors. These three groups of diagrams (I, II, and III) insert the thermal protector at different points in the circuit; therefore, different currents are provided to actuate the thermal protector.

Line Leads

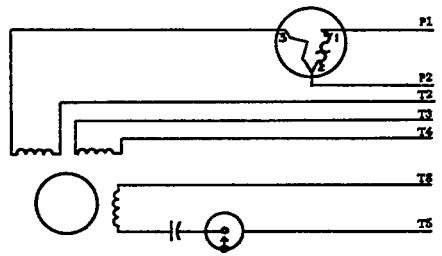

		L1	L2	Join	Join
Higher nameplate voltage	Counter-clockwise rotation	P1	T4	P2, T8	T2, T3, and T5
	Clockwise rotation	P1	T4	P2, T5	T2, T3, and T8
Lower nameplate voltage	Counter-clockwise rotation	P1	T2, T4 T5	P2, T3 and T8	. . .
	Clockwise rotation	P1	T2, T4 T8	P2, T3 and T5	. . .

Figure 2-29

Terminal Board[2,3]

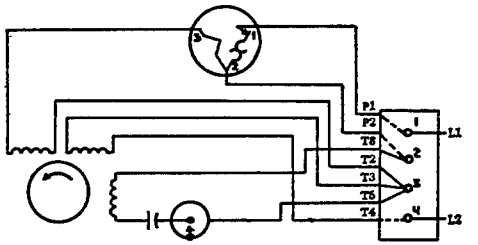

To obtain clockwise rotation, interchange leads T5 and T8.

Figure 2-30.a
HIGHER NAMEPLATE VOLTAGE

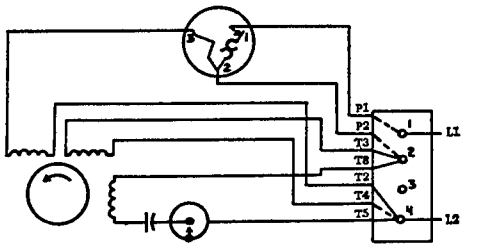

To obtain clockwise rotation, interchange leads T5 and T8.

Figure 2-30.b
LOWER NAMEPLATE VOLTAGE

Terminal Board with Links[2]

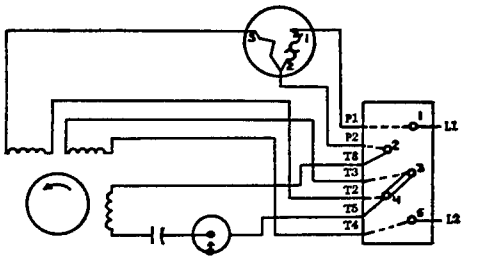

To obtain clockwise rotation, interchange leads T5 and T8.

Figure 2-31.a
HIGHER NAMEPLATE VOLTAGE

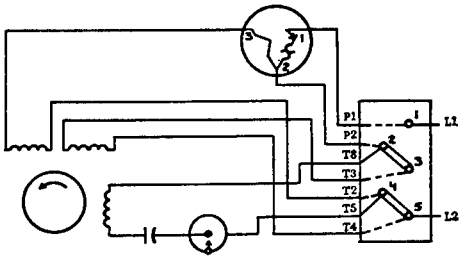

To obtain clockwise rotation, interchange leads T5 and T8.

Figure 2-31.b
LOWER NAMEPLATE VOLTAGE

[1]Motor starting switch shown in running position. All directions of rotation shown are facing the end opposite the drive.
[2]Terminal boards are shown viewed from the front. Dotted lines indicate permanent connection.
[3]Proper connection depends upon design of motor and thermal protector; refer to motor manufacturers' information for proper diagram.

Copyright National Electrical Manufacturers Association
Provided by IHS under license with NEMA
No reproduction or networking permitted without license from IHS

Not for Resale

2.48.2.2.2 GROUP II—DUAL VOLTAGE—WITH THERMAL PROTECTOR[1]

Line Leads						
		L1	L2	Join	Join	Insulate Separately
Higher nameplate voltage	Counter-clockwise rotation	P1	T4, T5	T2, T3, and T8	. . .	P2, T1
	Clockwise rotation	P1	T4, T8	T2, T3, and T5	. . .	P2, T1
Lower nameplate voltage	Counter-clockwise rotation	P1	T2, T4 T5	P2, T3	T1, T8	. . .
	Clockwise rotation	P1	T2, T4 T8	P2, T3	T1, T5	. . .

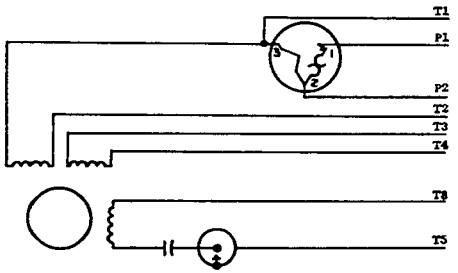

Figure 2-32

Terminal Board[2,3]

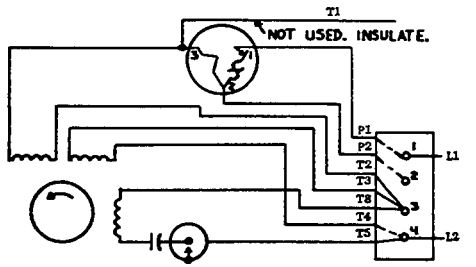

To obtain clockwise rotation, interchange leads T5 and T8.

Figure 2-33.a
HIGHER NAMEPLATE VOLTAGE

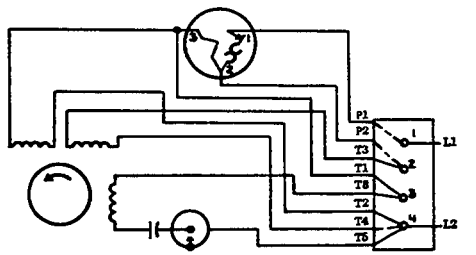

To obtain clockwise rotation, interchange leads T5 and T8.

Figure 2-33.b
LOWER NAMEPLATE VOLTAGE

Terminal Board with Links[2]

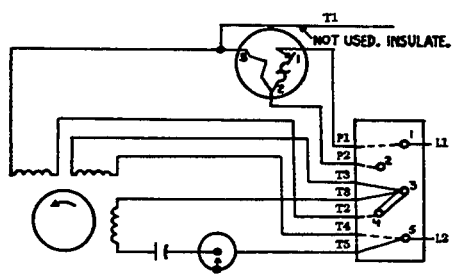

To obtain clockwise rotation, interchange leads T5 and T8.

Figure 2-34.a
HIGHER NAMEPLATE VOLTAGE

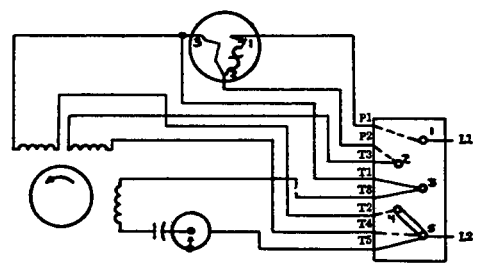

To obtain clockwise rotation, interchange leads T5 and T8.

Figure 2-34.b
LOWER NAMEPLATE VOLTAGE

[1]Motor starting switch shown in running position. All directions of rotation shown are facing the end opposite the drive.
[2]Terminal boards are shown viewed from the front. Dotted lines indicate permanent connection.
[3]Proper connection depends upon design of motor and thermal protector; refer to motor manufacturers' information for proper diagram.

Copyright National Electrical Manufacturers Association
Provided by IHS under license with NEMA
No reproduction or networking permitted without license from IHS

2.48.2.2.3 GROUP III—DUAL VOLTAGE—WITH THERMAL PROTECTOR[1]

Line Leads

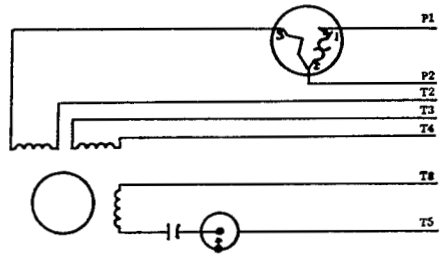

		L1	L2	Join	Insulate Separately
Higher nameplate voltage	Counter-clockwise rotation	P1	T4, T5	T2, T3 and T8	P2
	Clockwise rotation	P1	T4, T8	T2, T3, and T5	P2
Lower nameplate voltage	Counter-clockwise rotation	P1	T2, T4 T5	P2, T3 and T8	. . .
	Clockwise rotation	P1	T2, T4 T8	P2, T3 and T5	. . .

Figure 2-35

Terminal Board[2,3]

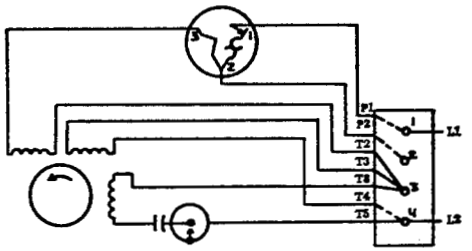

To obtain clockwise rotation, interchange leads T5 and T8.

Figure 2-36.a
HIGHER NAMEPLATE VOLTAGE

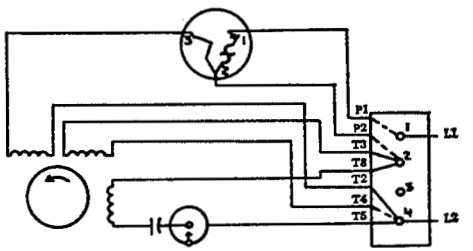

To obtain clockwise rotation, interchange leads T5 and T8.

Figure 2-36.b
LOWER NAMEPLATE VOLTAGE

Terminal Board with Links[2]

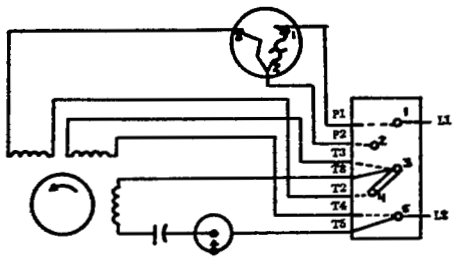

To obtain clockwise rotation, interchange leads T5 and T8.

Figure 2-37.a
HIGHER NAMEPLATE VOLTAGE

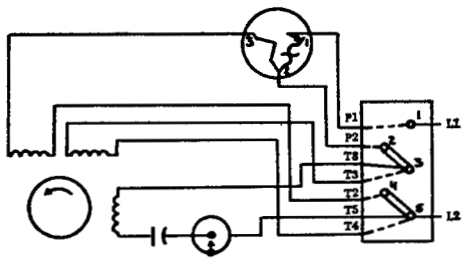

To obtain clockwise rotation, interchange leads T5 and T8.

Figure 2-37.b
LOWER NAMEPLATE VOLTAGE

[1]Motor starting switch shown in running position. All directions of rotation shown are facing the end opposite the drive.
[2]Terminal boards are shown viewed from the front. Dotted lines indicate permanent connection.
[3]Proper connection depends upon design of motor and thermal protector; refer to motor manufacturers' information for proper diagram.

Not for Resale

Copyright National Electrical Manufacturers Association
Provided by IHS under license with NEMA
No reproduction or networking permitted without license from IHS

2.49 SCHEMATIC DIAGRAMS FOR TWO-VALUE CAPACITOR MOTORS—SINGLE VOLTAGE—REVERSIBLE

2.49.1 Without Thermal Protector[1]

Line Leads		Terminal Board[2]
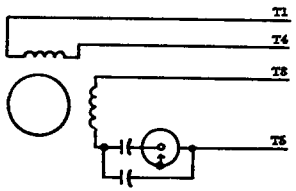		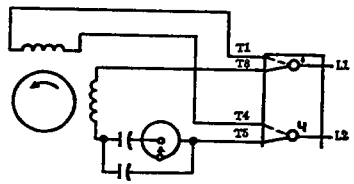
	L1 **L2**	To obtain clockwise rotation, interchange leads T5 and T8.
Counter-clockwise rotation	T1, T8 T4, T5	**Figure 2-39.a**
Clockwise rotation	T1, T5 T4, T8	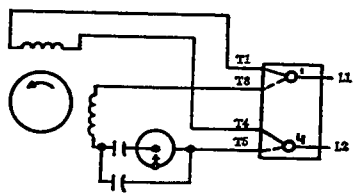
Figure 2-38		To obtain clockwise rotation, interchange leads T1 and T4.
		Figure 2-39.b

[1]Motor starting switch shown in running position. All directions of rotation shown are facing the end opposite the drive.
[2]Terminal boards are shown viewed from the front. Dotted lines indicate permanent connection.

Not for Resale

2.49.2 With Thermal Protector[1]

Line Leads

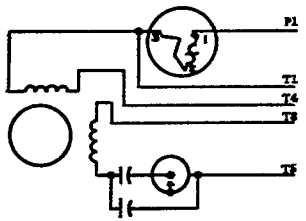

	L1	L2	Join
Counter-clockwise rotation	P1	T4, T5	T1, T8
Clockwise rotation	P1	T4, T8	T1, T5

Figure 2-40

Terminal Board[2]

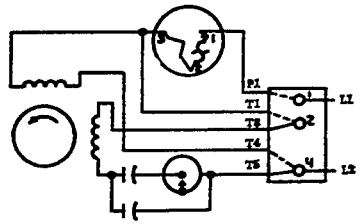

To obtain clockwise rotation, interchange leads T5 and T8.

Figure 2-41.a

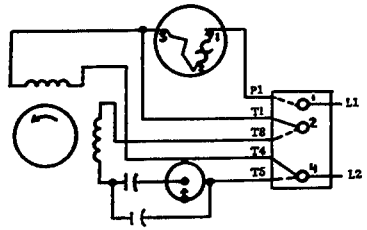

To obtain clockwise rotation, interchange leads T1 and T4.

Figure 2-41.b

[1]Motor starting switch shown in running position. All directions of rotation shown are facing the end opposite the drive.
[2]Terminal boards are shown viewed from the front. Dotted lines indicate permanent connection.

Copyright National Electrical Manufacturers Association
Provided by IHS under license with NEMA
No reproduction or networking permitted without license from IHS
Not for Resale

Copyright National Electrical Manufacturers Association
Provided by IHS under license with NEMA
No reproduction or networking permitted without license from IHS

2.50 SCHEMATIC DIAGRAMS FOR PERMANENT-SPLIT CAPACITOR MOTORS—SINGLE VOLTAGE—REVERSIBLE[1,2]

Line Leads

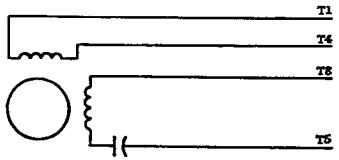

	L1	L2
Counter-clockwise rotation	T1, T8	T4, T5
Clockwise rotation	T1, T5	T4, T8

Figure 2-42

Terminal Board[3]

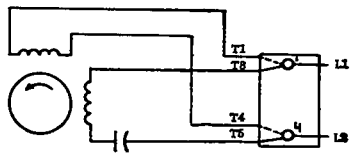

To obtain clockwise rotation, interchange leads T5 and T8.

Figure 2-43.a

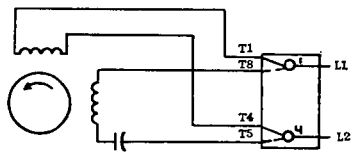

To obtain clockwise rotation, interchange leads T1 and T4.

Figure 2-43.b

[1]All directions of rotation shown are facing the end opposite the drive.
[2]There are other terminal markings for definite-purpose permanent-split capacitor motors; see Part 18.
[3]Terminal boards are shown viewed from the front. Dotted lines indicate permanent connection.

NEMA MG*1 93 ■ 6470247 0502881 161 ■

Not for Resale

2.51 SCHEMATIC DIAGRAMS FOR UNIVERSAL MOTORS—SINGLE VOLTAGE

NON-REVERSIBLE

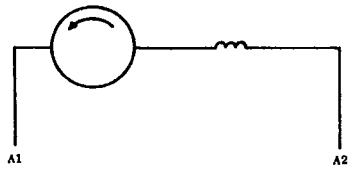

L1 TO A1
L2 TO A2

Figure 2-44.a

REVERSIBLE

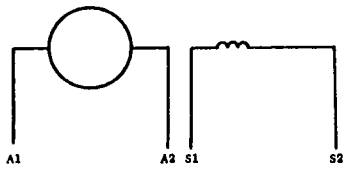

	L1	L2	Join
Counter-clockwise rotation	A1	S2	A2, S1
Clockwise rotation	A1	S1	A2, S2

Figure 2-44.b

Copyright National Electrical Manufacturers Association
Provided by IHS under license with NEMA
No reproduction or networking permitted without license from IHS

Not for Resale

NEMA MG*1 93 ■ 6470247 0502883 T34 ■

2.52 SCHEMATIC DIAGRAMS FOR REPULSION, REPULSION-START INDUCTION, AND REPULSION-INDUCTION MOTORS

Reversible by Shifting Brushes

SINGLE VOLTAGE

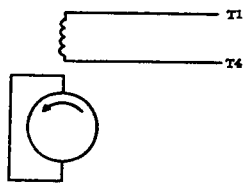

L1 TO T1
L2 TO T4

Figure 2-45.a

DUAL VOLTAGE

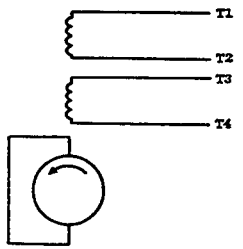

	L1	L2	Join
Higher nameplate voltage	T1	T4	T2, T3
Lower nameplate voltage	T1, T3	T2, T4	. . .

Figure 2-45.b

Single Voltage—Externally Reversible

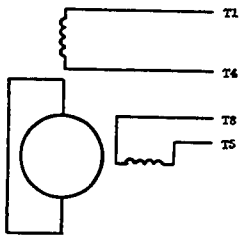

	L1	L2	Join
Counter-clockwise rotation	T1	T5	T4, T8
Clockwise rotation	T1	T8	T4, T5

Figure 2-46.a

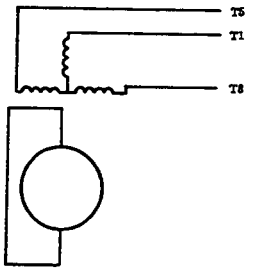

	L1	L2	Insulate
Counter-clockwise rotation	T1	T5	T8
Clockwise rotation	T1	T8	T5

Figure 2-46.b

Copyright National Electrical Manufacturers Association
Provided by IHS under license with NEMA
No reproduction or networking permitted without license from IHS
Not for Resale

2.53 SHADED-POLE MOTORS—TWO SPEED

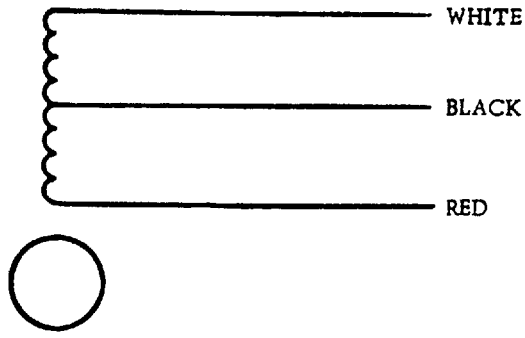

	L1	L2	Open
High Speed	White	Black	Red
Low Speed	White	Red	Black

Figure 2-47

POLYPHASE INDUCTION MOTORS

2.60 GENERAL PRINCIPLES FOR TERMINAL MARKINGS FOR POLYPHASE INDUCTION MOTORS

2.60.1 The markings of the terminals of a motor serve their purpose best if they indicate the electrical relations between the several circuits within the motor. The windings of a motor are seldom accessible, and the arrangement of the terminal numbers varies with the combinations of connections which are required. However, if a definite system of numbering is used, the marking of the terminals may be made to tell the exact relations of the windings within the motor. As far as practicable, 2.61 is formulated to embody such a system, which system employs as one of its fundamental points a clockwise rotating spiral with T1 at the outer end and finishing with the highest number at its inner end as a means for determining the sequence of the numerals. See Figure 2-48. The numbering of the terminals on polyphase induction motors does not imply standardization of the direction of rotation of the motor shaft.

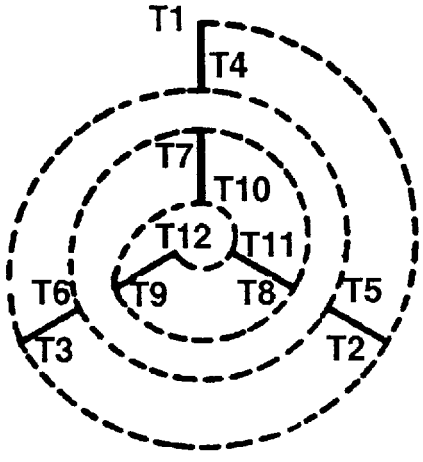

Figure 2-48
CLOCKWISE ROTATING SPIRAL WITH T1 AT THE OUTER END

2.60.2 For three-phase motors having two synchronous speeds obtained from a reconnectible winding, it is undesirable to adhere to the clockwise system of numbering for all terminals as this would cause the motor to run with clockwise shaft rotation on one speed and counterclockwise on the other speed if the power lines are connected to each set of terminals in the same sequence. This feature may be considered an advantage as a winding with part of its terminals following a clockwise sequence and part following a counterclockwise sequence can be recognized immediately as a two-speed motor with a reconnectible winding.

2.60.3 For two-phase motors, the terminal markings are such that all odd numbers are in one phase and all even numbers are in the other phase. The markings of all motors except those for two-speed motors using a single reconnectible winding are based, as are three-phase windings, on a clockwise spiral system of rotation in the sequence of terminal numbering.

2.61 TERMINAL MARKINGS FOR THREE-PHASE SINGLE-SPEED INDUCTION MOTORS

The terminal markings for three-phase single-speed induction motors shall be as shown in Figures 2-49, 2-50, 2-51, and 2-52. These terminal markings were developed in accordance with the following procedure which shall be used in developing terminal markings for other combinations of motor stator circuits.

2.61.1 First

A schematic phasor diagram shall be drawn showing an inverted Y connection with the individual circuits in each phase arranged for series connection with correct polarity relation of circuits. The diagram for two circuits per phase, for example, is as shown in Figure 2-53.

Copyright National Electrical Manufacturers Association
Provided by IHS under license with NEMA
No reproduction or networking permitted without license from IHS
Not for Resale

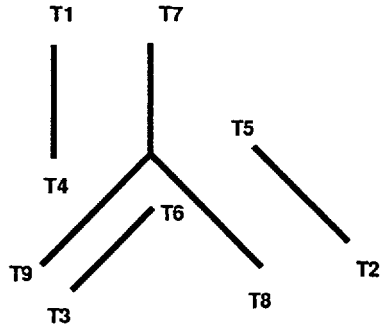

Figure 2-49 ▲
Y-CONNECTED, DUAL VOLTAGE

Voltage	L1	L2	L3	Join		
Low	(T1, T7)	(T2, T8)	(T3, T9)	...	(T4, T5, T6)	...
High	T1	T2	T3	(T4, T7)	(T5, T8)	(T6, T9)

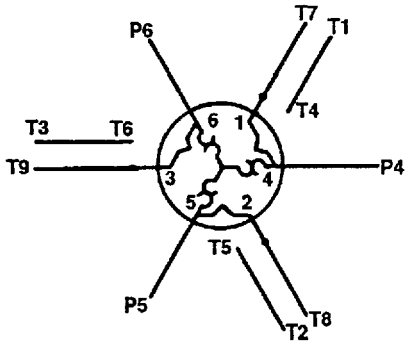

Figure 2-50
TERMINAL MARKINGS FOR THREE-PHASE DUAL-VOLTAGE SINGLE-SPEED INDUCTION MOTORS WITH PROTECTOR IN NEUTRAL

Voltage	L1	L2	L3	Join			Insulate Separately
Low	(T1,T7)	(T2,T8)	(T3,T9)	(T4,P4)	(T5,P5)	(T6,P6)	...
High	T1	T2	T3	(T4,T7)	(T5,T8)	(T6,T9)	P4-P5-P6

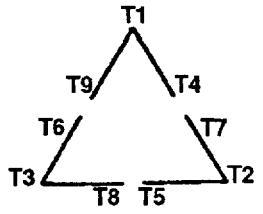

Figure 2-51
DELTA-CONNECTED, DUAL VOLTAGE

Voltage	L1	L2	L3	Join		
Low	(T1,T6,T7)	(T2,T4,T8)	(T3,T5,T9)	...	...	...
High	T1	T2	T3	(T4, T7)	T5, T8)	(T6, T9)

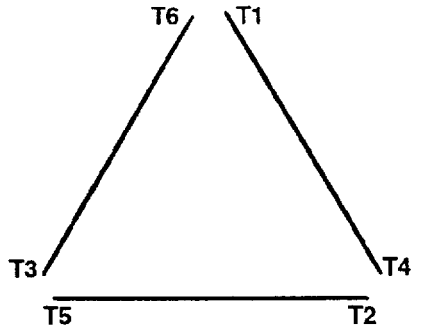

Figure 2-52
Y-CONNECTED START, DELTA-CONNECTED RUN, SINGLE VOLTAGE

	L1	L2	L3	Join
Start	T1	T2	T3	(T4,T5,T6)
Run	(T1,T6)	(T2,T4)	(T3,T5)	...

Y-DELTA-CONNECTED, DUAL VOLTAGE (VOLTAGE RATIO $\sqrt{3}$ TO 1)

	L1	L2	L3	Join
High Voltage	T1	T2	T3	(T4,T5,T6)
Low Voltage	(T1,T6)	(T2,T4)	(T3,T5)	...

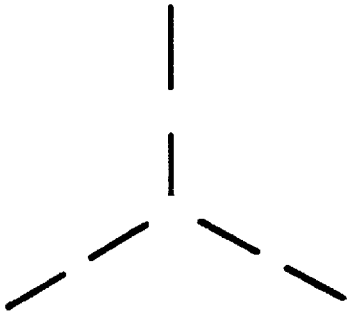

Figure 2-53
DIAGRAM FOR TWO CIRCUITS PER PHASE

Copyright National Electrical Manufacturers Association
Provided by IHS under license with NEMA
No reproduction or networking permitted without license from IHS

Not for Resale

2.61.2 Second

Starting with T1 at the outside and top of the diagram, the ends of the circuit shall be numbered consecutively in a clockwise direction proceeding on a spiral towards the center of the diagram. For two circuits per phase, for example, the terminals are marked as shown in Figure 2-48.

2.61.3 Third

A schematic phasor diagram shall be drawn showing the particular interconnection of circuits for the motor under consideration, and the terminal markings determined in accordance with 2.61.1 and 2.61.2 shall be arranged to give the correct polarity relation of circuits. For example, if the winding shown in Figure 2-48 is to be connected with two circuits in multiple per phase, the diagram and markings shall be as shown in Figure 2-54.

2.61.4 Fourth

The highest numbers shall be dropped and only the lowest number shall be retained where two or more terminals are permanently connected together. For example, if the winding shown in Figure 2-54 is to have the two circuits in each phase permanently connected together with three line leads and three neutral leads brought out, the terminal markings shall be as shown in Figure 2-56 or, if the winding shown in Figure 2-48 is to be arranged for either a series or a multiple connection with the neutral point brought out, the vector diagram and terminal markings shall be as shown in Figure 2-57.

2.61.5 Fifth

Where the ends of three coils are connected together to form a permanent neutral, the terminal markings of the three leads so connected shall be dropped. If the neutral point is brought out, it shall always be marked TO. See Figure 2-56.

2.61.6 Sixth

If a winding is to be delta-connected, the inverted Y diagram (Figure 2-53) shall be rotated 30 degrees counterclockwise. T1 shall be assigned to the outer end of the top leg and the balance of the numbering shall be in accordance with 2.60 and Figure 2.48. A schematic delta shall then be constructed in which the T1 leg of the rotated Y becomes the right-hand side of the delta, the T2 leg becomes the bottom (horizontal) side, and the T3 leg becomes the left side of the delta. 2.60 shall be applied insofar as it applies to a delta connection. See Figure 2-57.

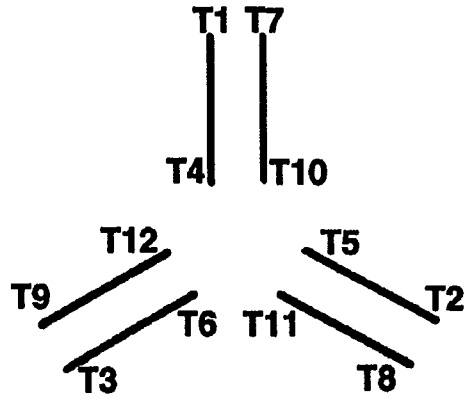

Figure 2-54
TERMINAL MARKINGS FOR TWO CIRCUITS IN MULTIPLE PER PHASE

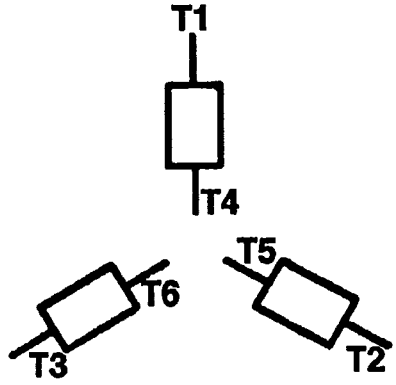

Figure 2-55
TERMINAL MARKINGS FOR TWO CIRCUITS IN MULTIPLE PER PHASE, PERMANENTLY CONNECTED

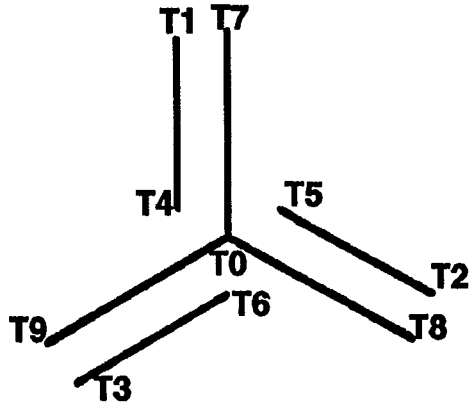

Figure 2-56
TERMINAL MARKINGS WITH NEUTRAL POINT BROUGHT OUT

Copyright National Electrical Manufacturers Association
Provided by IHS under license with NEMA
No reproduction or networking permitted without license from IHS
Not for Resale

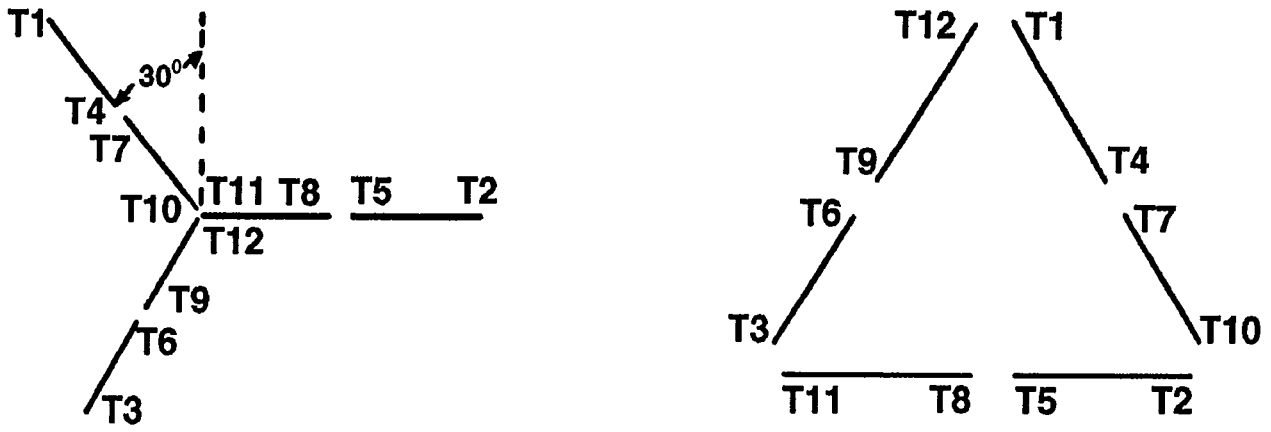

Figure 2-57
TERMINAL MARKINGS FOR TWO CIRCUITS PER PHASE, DELTA CONNECTED

2.62 TERMINAL MARKINGS FOR Y- AND DELTA-CONNECTED DUAL VOLTAGE MOTORS

Figures 2-49 through 2-52 illustrate the application of 2.61 in determining terminal markings of Y- and delta-connected dual-voltage motors.

2.63 TERMINAL MARKINGS FOR THREE-PHASE TWO-SPEED SINGLE-WINDING INDUCTION MOTORS

The general principles for terminal markings for polyphase induction motors given in 2.60.1 are not applicable to three-phase two-speed single-winding induction motors because, if followed and the terminals are connected in the same sequence, the direction of rotation at the two speeds will be different.

2.64 TERMINAL MARKINGS FOR Y- AND DELTA-CONNECTED THREE PHASE TWO-SPEED SINGLE-WINDING MOTORS

The terminal markings for Y- and delta-connected three phase two-speed single-winding three-phase induction motors shall be in accordance with Figures 2-58 through 2-62.

2.65 TERMINAL MARKINGS FOR THREE-PHASE INDUCTION MOTORS HAVING TWO OR MORE SYNCHRONOUS SPEEDS OBTAINED FROM TWO OR MORE INDEPENDENT WINDINGS

2.65.1 Each Independent Winding Giving One Speed

The winding giving the lowest speed shall take the same terminal markings as determined from 2.61 for the particular winding used. The terminal markings for the higher speed windings shall be obtained by adding 10, 20, or 30, etc., to the terminal markings as determined from 2.61 for the particular winding used, the sequences being determined by progressing each time to the next higher speed. The terminal markings for a three speed motor using three windings are given in Figure 2-63.

2.65.2 Each Independent Winding Reconnectible To Give Two Synchronous Speeds

2.65.2.1 FIRST

Phasor diagrams of the windings to be used shall be drawn and each winding given the terminal markings shown in accordance with Figures 2-58 through 2-60. The neutral terminal, if brought out, shall be marked TO.

2.65.2.2 SECOND

No change shall be made in any of the terminal markings of the winding giving the lowest speed, irrespective of whether the other speed obtained from this winding is an intermediate or the highest speed.

2.65.2.3 THIRD

Ten shall be added to all terminal markings of the winding giving the next higher speed, and an additional 10 shall be added to all the terminal markings for each consecutively higher speed winding. An example of terminal markings for a four-speed motor using two windings are given in Figure 2-64.

Copyright National Electrical Manufacturers Association
Provided by IHS under license with NEMA
No reproduction or networking permitted without license from IHS

Not for Resale

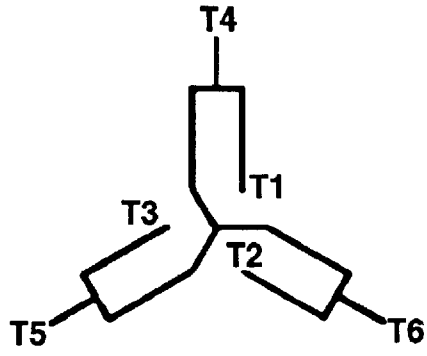

Figure 2-58
VARIABLE TORQUE MOTORS FOR ONE OR MORE WINDINGS

Speed	L1	L2	L3	Insulate Separately	Join
Low	T1	T2	T3	T4-T5-T6	...
High	T6	T4	T5	...	(T1, T2, T3)

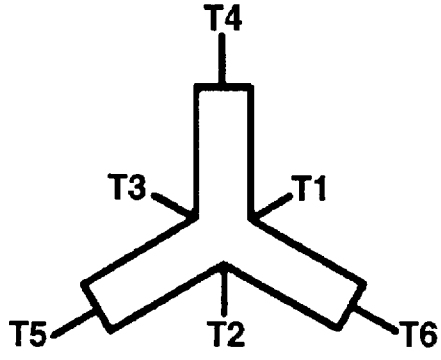

Figure 2-59
CONSTANT TORQUE MOTORS FOR SINGLE WINDING ONLY

Speed	L1	L2	L3	Insulate Separately	Join
Low	T1	T2	T3	T4-T5-T6	...
High	T6	T4	T5	...	(T1, T2, T3)

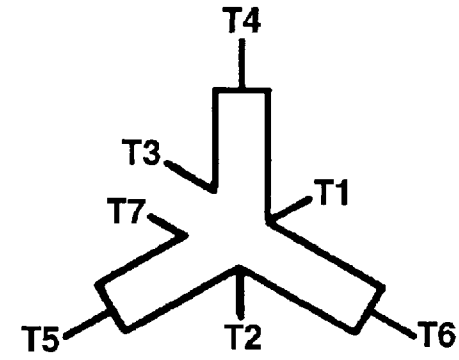

Figure 2-60
CONSTANT TORQUE MOTORS FOR TWO OR MORE INDEPENDENT WINDINGS

Speed	L1	L2	L3	Insulate Separately	Join
Low	T1	T2	T3, T7	T4-T5-T6	...
High	T6	T4	T5	...	(T1, T2, T3, T7)

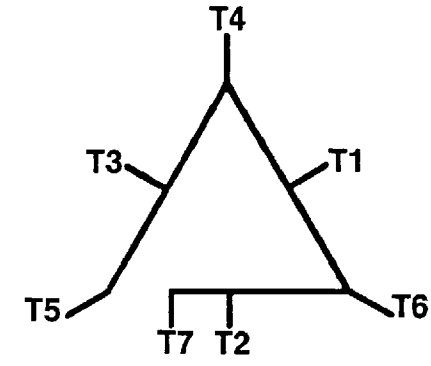

Figure 2-61
CONSTANT HORSEPOWER MOTORS FOR TWO OR MORE INDEPENDENT WINDINGS

Speed	L1	L2	L3	Insulate Separately	Join
Low	T1	T2	T3	...	(T4, T5, T6, T7)
High	T6	T4	(T5, T7)	T1-T2-T3	...

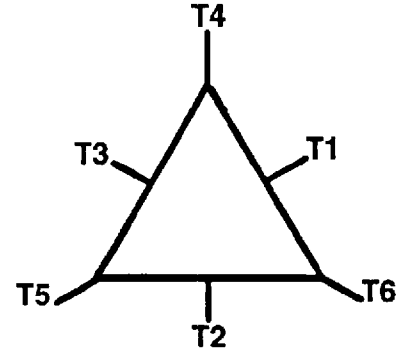

Figure 2-62
CONSTANT HORSEPOWER MOTORS FOR SINGLE WINDING ONLY

Speed	L1	L2	L3	Insulate Separately	Join
Low	T1	T2	T3	...	(T4, T5, T6)
High	T6	T4	T5	T1-T2-T3	...

Copyright National Electrical Manufacturers Association
Provided by IHS under license with NEMA
No reproduction or networking permitted without license from IHS

Not for Resale

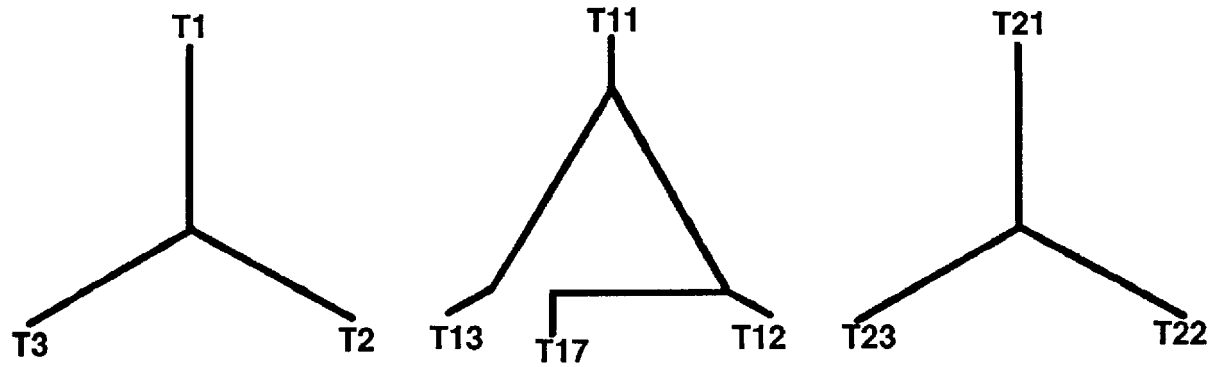

Figure 2-63
THREE-SPEED MOTOR USING THREE WINDINGS

Speed	L1	L2	L3	Insulate Separately	Join
Low	T1	T2	T3	T11-T12-T13-T17-T21-T22-T23	...
Second	T11	T12	(T13, T17)	T1-T2-T3-T21-T22-T23	...
High	T21	T22	T23	T1-T2-T3-T11-T12-T13-T17	...



Figure 2-64
FOUR-SPEED MOTOR USING TWO WINDINGS

Speed	L1	L2	L3	Insulate Separately	Join
Low	T1	T2	T3	T4-T5-T6-T11-T12-T13-T14-T15-T16	...
Second	T11	T12	T13	T1-T2-T3-T4-T5-T6-T14-T15-T16	...
Third	T6	T4	T5	T11-T12-T13-T14-T15-T16	(T1, T2, T3)
High	T16	T14	T15	T1-T2-T3-T4-T5-T6	(T11, T12, T13)

2.65.3 Two or More Independent Windings at Least One of Which Gives One Synchronous Speed and the Other Winding Gives Two Synchronous Speeds

2.65.3.1 FIRST

Each winding shall be given the markings determined in accordance with 2.65.2.1.

2.65.3.2 SECOND

No change shall be made in any of the terminal markings of the winding giving the lowest speed.

2.65.3.3 THIRD

Ten shall be added to all terminal markings of the winding giving the next higher speed, and an additional 10 shall be added to all the terminal markings for each consecutively higher speed winding. A typical marking for a three-speed motor using two windings where one of the windings is used for the high speed only is given in Figure 2-65.

NOTES

1—If, under any of the provisions of this standard, the addition of 10, 20, 30, etc., to the basic terminal markings causes a duplication of markings due to more than nine leads being brought out on any one winding, then 20, 40, 60, etc., should be added instead of 10, 20, 30, etc., to obtain the markings for the higher speeds.

2—The illustrative figures in this standard apply when all leads are brought out on the same end of the motor. When one or more of the windings have some leads brought out on one end of the motor and some on the other end, the rotation of the terminal markings for leads brought out on one end may be shown on the diagram as shown in the illustrative figures, and the terminal markings for those brought out on the opposite end may be shown reversed in rotation. When diagrams use this reversed rotation of markings, an explanatory note should be included for the benefit of the control manufacturer and user to inform them that, when L1, L2, and L3 are connected to any winding with the same sequence of numbers (T1, T2, T3; or T4, T5, T6; or T11, T12, T13, etc.), the shaft rotation will be the same.

Copyright National Electrical Manufacturers Association
Provided by IHS under license with NEMA
No reproduction or networking permitted without license from IHS

Not for Resale

2.66 TERMINAL MARKINGS OF THE ROTORS OF WOUND-ROTOR INDUCTION MOTORS

See Figures 2-66 and 2-67.

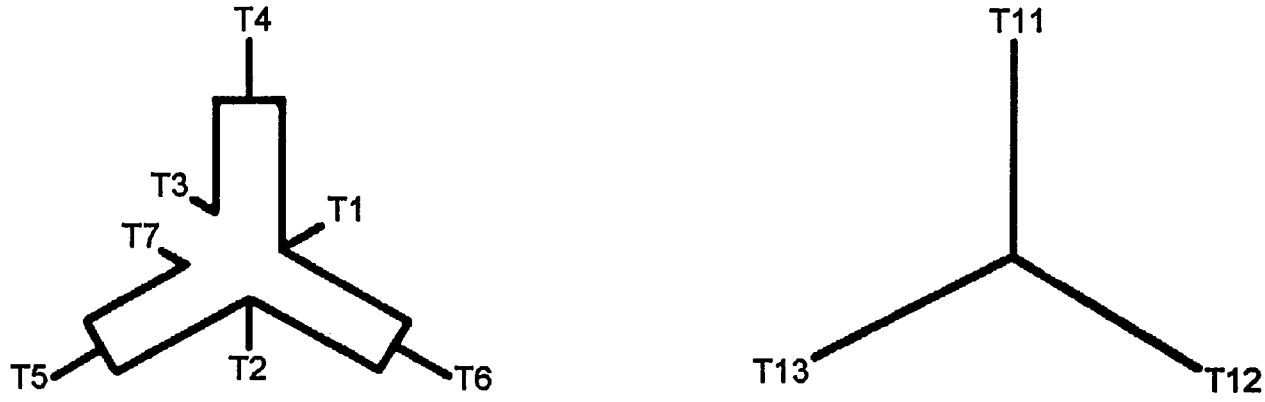

Figure 2-65
THREE-SPEED MOTOR USING TWO WINDINGS

Speed	L1	L2	L3	Insulate Separately	Join
Low	T1	T2	(T3, T7)	T4-T5-T6-T11-T12-T13	...
Second	T6	T4	T5	T11-T12-T13	(T1, T2, T3, T7)
High	T11	T12	T13	T1-T2-T3-T4-T5-T6-T7	...

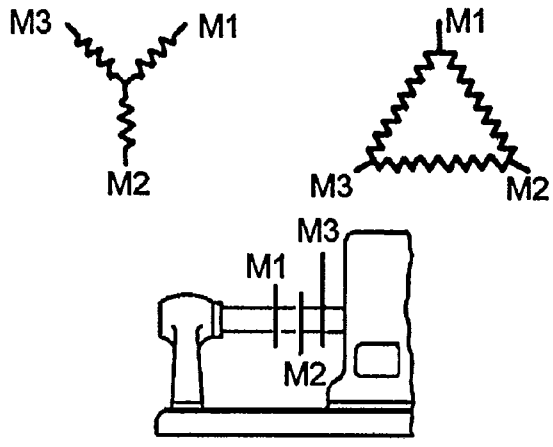

Figure 2-66
THREE-PHASE WOUND ROTOR

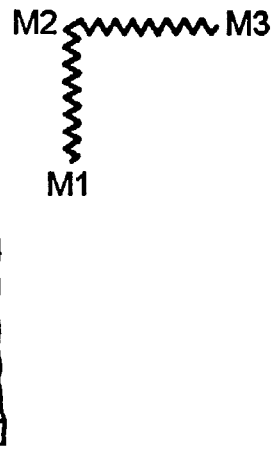

Figure 2-67
TWO-PHASE WOUND ROTOR

Copyright National Electrical Manufacturers Association
Provided by IHS under license with NEMA
No reproduction or networking permitted without license from IHS
Not for Resale

NEMA MG*1 93 6470247 0502891 000

Section I
GENERAL STANDARDS APPLYING TO ALL MACHINES
Part 3
HIGH-POTENTIAL TESTS

3.01 HIGH-POTENTIAL TESTS

3.01.1 Safety

WARNING—Because of the high voltages used, high-potential tests should be conducted only by trained personnel, and adequate safety precautions should be taken to avoid injury to personnel and damage to property. Tested windings should be discharged carefully to avoid injury to personnel on contact. See 2.10 in NEMA Publication No. MG 2.

3.01.2 Definition

High-potential tests are tests which consist of the application of a voltage higher than the rated voltage for a specified time for the purpose of determining the adequacy against breakdown of insulating materials and spacings under normal conditions.

3.01.3 Procedure

High-potential tests shall be made in accordance with the following applicable IEEE Publications.

a. Std 112
b. Std 113
c. Std 114
d. Std 115

3.01.4 Test Voltage

The high-potential test shall be made by applying a test voltage having the magnitude specified in the part of this publication that applies to the specific type of machine and rating being tested.

The frequency of the test circuit shall be 50 to 60 hertz[1], and the effective value of the test voltage shall be the crest value of the specified test voltage divided by the square root of two. The wave shape shall have a deviation factor not exceeding 0.1.

The dielectric test should be made with a dielectric tester which will maintain the specified voltage at the terminals during the test.

3.01.5 Condition of Machine to Be Tested

The winding being tested shall be completely assembled (see 3.01.10). The test voltage shall be applied when, and only when, the machine is in good condition and the insulation resistance is not impaired due to dirt or moisture. (See IEEE Std 43)

3.01.6 Duration of Application of Test Voltage

The specified high-potential test voltage shall be applied continuously for 1 minute. Machines for which the specified test voltage is 2500 volts or less shall be permitted to be tested for 1 second at a voltage which is 1.2 times the specified 1-minute test voltage as an alternative to the 1-minute test, if desired.

To avoid excessive stressing of the insulation, repeated application of the high-potential test voltage is not recommended.

3.01.7 Points of Application of Test Voltage

The high-potential test voltage shall be successively applied between each electric circuit and the frame or core. All other windings or electric circuits not under test and all external metal parts shall be connected to the frame or core. All leads of each winding, phase, or electric circuit shall be connected together, whether being tested or connected to the frame or core.

An electric circuit consists of all windings and other live parts which are conductively connected to the same power supply or load bus when starting or running. A winding which may be connected to a separate power supply, transformer, or load bus any time during normal operation is considered to be a separate circuit and must be high-potential tested separately. For example, fields of direct current machines shall be considered to be separate circuits unless they are permanently connected in the machine. Unless otherwise stated, interconnected polyphase windings are considered as one circuit and shall be permitted to be so tested.

3.01.8 Accessories and Components

All accessories such as surge capacitors, lightning arresters, current transformers, etc., which have leads connected to the rotating machine terminals shall be disconnected during the test, with the leads connected together and to the frame or core. These accessories shall have been subjected to the high-potential test applicable to

---

[1] A direct instead of an alternating voltage may be used for high-potential tests. In such cases, a test voltage of 1.7 times the specified alternating current (effective value) as designated in 12.03 is required.

Copyright National Electrical Manufacturers Association
Provided by IHS under license with NEMA
No reproduction or networking permitted without license from IHS
Not for Resale

the class of apparatus at their point of manufacture. Capacitors of capacitor-type motors must be left connected to the winding in the normal manner for machine operation (running or starting).

Component devices and their circuits such as space heaters and temperature sensing devices in contact with the winding (thermostats, thermocouples, thermistors, resistance temperature detectors, etc.), connected other than in the line circuit, shall be connected to the frame or core during machine winding high-potential tests. Each of these component device circuits, with leads connected together, shall then be tested by applying a voltage between the circuit and the frame or core, equal to twice the circuit rated voltage plus 1000 volts, or equal to the high potential test voltage of the machine, whichever is lower. During each device circuit test all other machine windings and components shall be connected together and to the frame or core. Unless otherwise stated, the rated voltage of temperature sensing devices shall be taken as follows:

Thermostats-600 volts

Thermocouples, thermistors, RTDs-50 volts

When conducting a high-potential test on an assembled brushless exciter and synchronous machine field winding, the brushless circuit components (diodes, thyristors, etc.) shall be short circuited (not grounded) during the test.

3.01.9 Evaluation of Dielectric Failure

Insulation breakdown during the application of the high-potential test voltage shall be considered as evidence of dielectric failure, except that in the production testing of small motors dielectric failure shall be indicated by measurement of insulation resistance below a specified value (see 12.04).

3.01.10 Initial Test at Destination

When assembly of a winding is completed at the destination, thus precluding the possibility of making final high-potential tests at the factory, it is recommended that high-potential tests be made with the test voltages specified in the applicable section of this publication immediately after the final assembly and before the machine is put into service. The test voltage should be applied when, and only when, the machine is in good condition and the insulation resistance is not impaired due to dirt or moisture. (See IEEE Std 43.)

3.01.11 Tests of an Assembled Group of Machines and Apparatus

Repeated application of the foregoing test voltage is not recommended. When a motor is installed in other equipment immediately after manufacture and a high-potential test of the entire assembled motor and equipment is requited, the test voltage shall not exceed 85 percent of the original test voltage or, when the motor and equipment are installed in an assembled group, the test voltage shall not exceed 85 percent of the lowest test voltage specified for that group.

3.01.12 Additional Tests Made After Installation

When a high-potential test is made after installation on a new machine which has previously passed its high-potential test at the factory and whose windings have not since been disturbed, the test voltage shall be 75 percent of the test voltage specified in the part of this publication that applies to the type of machine and rating being tested.

Copyright National Electrical Manufacturers Association
Provided by IHS under license with NEMA
No reproduction or networking permitted without license from IHS

Not for Resale

NEMA MG*1 93 ■ 6470247 0506756 794 ■

Section I
GENERAL STANDARDS APPLYING TO ALL MACHINES
Part 4
DIMENSIONS, TOLERANCES, AND MOUNTING

4.01 LETTERING OF DIMENSION SHEETS

Dimension sheets shall be lettered in accordance with Table 4-1. See also Figures 4-1 through 4-5.

Any letter dimension normally applying to the drive end of the machine will, when prefixed with the letter F, apply to the end opposite the drive.

Letter dimensions other than those listed below used by individual manufacturers shall be designated by the prefix letter X followed by A, B, C, D, E, etc.

Table 4-1 ▲
LETTERING OF DIMENSION SHEETS

NEMA Letter	IEC Letter	Dimension Indicated
A	AB	Overall dimension across feet of horizontal machine (end view)
B	BB	Overall dimension across feet of horizontal machine (side view)
C	L	Overall length of single shaft extension machine (For overall length of double shaft extension machine, see letter dimension (FC.)
D	H	Centerline of shaft to bottom of feet
E	...	Centerline of shaft to bottom of feet
2E	A	Distance between centerlines of mounting holes in feet or base of machine (end view)
2F	B	Distance between centerlines of mounting holes in feet or base of machine (side view)
G	HA	Thickness of mounting foot at H hole or slot
H	K	Diameter of holes or width of slot in feet of machine
J	AA	Width of mounting foot at mounting surface
K	BA	Length of mounting foot at mounting surface
L	...	(No longer in use.)
M	...	(No longer in use.)
N	...	Length of shaft from end of housing to end of shaft, drive end
N-W	E	Length of the shaft extension from the shoulder at drive end
O	HC	Top of horizontal machine to bottom of feet
P	AC	Maximum width of machine (end view) including pole belts, fins, etc., but excluding terminal housing, lifting devices, feet, and outside diameter of face or flange
R	G	Bottom of keyseat or flat to bottom side of shaft or bore
S	F	Width of keyseat
T	HD-HC	Height of lifting eye, terminal box, or other salient part above the surface of the machine.
T+O	HD	Distance from the top of the lifting eye, the terminal box or other most salient part mounted on the top of the machine to the bottom of the feet
U	D	Diameter of shaft extension. (For tapered shaft, this is diameter at a distance V from the threaded portion of the shaft.)
U-R	GE	Depth of the keyway at the crown of the shaft extension at drive end
V	...	Length of shaft available for coupling, pinion, or pulley hub, drive end. (On a straight shaft extension, this is a minimum value.)
W	...	For straight and tapered shaft, end of housing to shoulder. (For shaft extensions without shoulders, it is a clearance to allow for all manufacturing variations in parts and assembly.)

Table 4-1 continued next page

Copyright National Electrical Manufacturers Association
Provided by IHS under license with NEMA
No reproduction or networking permitted without license from IHS

Not for Resale

Table 4-1 ▲
LETTERING OF DIMENSION SHEETS

NEMA Letter	IEC Letter	Dimension Indicated
X	...	Length of hub of pinion when using full length of taper, drive end
Y	...	Distance from end of shaft to outer end of taper, drive end
Z	...	Width across corners of nut or diameter of washer, or tapered shaft, drive end
AA	...	Threaded or clearance hole for external conduit entrance (expressed in conduit size) to terminal housing
AB	AD	Centerline of shaft to extreme outside part of terminal housing (end view)
AC	...	Centerline of shaft to centerline of hole AA in terminal housing (end view)
AD	...	Centerline of terminal housing mounting to centerline of hole AA (side view)
AE	...	Centerline of terminal housing mounting to bottom of feet (end view)
AF	...	Centerline of terminal housing mounting to hole AA (end view)
AG	LB	Mounting surface of face, flange, or base of machine to opposite end of housing (side view)
AH	E+R	Mounting surface of face, flange, or base of machine to end of shaft
AJ	M	Diameter of mounting bolt circle in face, flange, or base of machine
AK	N	Diameter of male or female pilot on face, flange, or base of machine
AL	...	Overall length of sliding base or rail
AM	...	Overall width of sliding base or outside dimensions of rails
AN	...	Distance from centerline of machine to bottom of sliding base or rails
AO	...	Centerline of sliding base or rail to centerline of mounting bolt holes (end view)
AP	...	Centerline of sliding base or rails to centerline of inner mounting bolt holes (motor end view)
AR	...	Distance between centerlines of mounting holes in sliding base or distance between centerlines of rail mounting bolt holes (side view)
AT	...	Thickness of sliding base or rad foot
AU	...	Size of mounting holes in sliding base or ran
AV	...	Bottom of sliding base or rail to top of horizontal machine
AW	...	Centerline of rail or base mounting hole to centerline of adjacent motor mounting bolt
AX	...	Height of sliding base or rail
AY	...	Maximum extension of sliding base (or rail) adjusting screw
AZ	...	Width of slide rail
BA	C	Centerline of mounting hole in nearest foot to the shoulder on drive end shaft (For machines without a shaft shoulder, it is the centerline of mounting hole in nearest foot to the housing side of N-W dimension.)
BB	T	Depth of male or female pilot of mounting face, flange, or base of machine
BC	R	Distance between mounting surface of face, flange, or base of machine to shoulder on shaft. (For machine without a shaft shoulder, it is the distance between the mounting surface of face, flange, or base of machine to housing side of N-W dimension
BD	P	Outside diameter of mounting flange or base of machine
BE	LA	Thickness of mounting flange or base of machine
BF	S	Threaded or clearance hole in mounting face, flange, or base of machine
BG	...	(No longer in use.)
BH	...	Outside diameter of core or shell (side view)

Table 4-1 continued next page

Copyright National Electrical Manufacturers Association
Provided by IHS under license with NEMA
No reproduction or networking permitted without license from IHS
Not for Resale

Table 4-1 Cont. ▲
LETTERING OF DIMENSION SHEETS

NEMA Letter	IEC Letter	Dimensions Indicated
BJ	...	Overall length of coils (side view). Actual dimensions shall be permitted to be less depending of the number of poles and winding construction
BK	...	Distance from centerline of stator to lead end of coils
BL	...	Diameter over coils, both ends (BL = two times maximum radius)
BM	...	Overall length of stator shell
BN	...	Diameter of stator bore
BO	...	Length of rotor at bore
BP	...	Length of rotor over fans
BR	...	Diameter of finished surface or collar at ends of rotor
BS	...	Centerline of foot mounting hole, shaft end, to centerline of terminal housing mounting (side view)
BT	...	Movement of horizontal motor on base or rail
BU	...	Angle between centerline of terminal housing mounting and reference centerline of motor (end view)
BV	...	Centerline of terminal housing mounting to mounting surface of face or flange (side view)
BW	...	Inside diameter of rotor fan or end ring for shell-type and hermetic motors
BX	...	Diameter of bore in top drive coupling for hollow-shaft vertical motor
BY	...	Diameter of mounting holes in top drive coupling for hollow-shaft vertical motor
BZ	...	Diameter of bolt circle for mounting holes in top drive coupling for hollow-shaft vertical motor
CA	...	Rotor bore diameter
CB	...	Rotor counterbore diameter
CC	...	Depth of rotor counterbore
CD	...	Distance from the top coupling to the bottom of the base on Type P vertical motors.
CE	...	Overall diameter of mounting lugs
CF	...	Distance from the end of the stator shell to the end of the motor quill at compressor end. Where either the shell or quill is omitted, the dimension refers to the driven load end of the core.
CG	...	Distance from the end of the stator shell to the end of the stator coil at compressor end.
CH	...	Distance from the end of the stator shell to the end of the stator coil at end opposite the compressor.
CJ, CK–Rescinded 7-7-1973.		
CL	...	Distance between clamp-bolt centers for two-hole clamping of universal motor stator cores.
CM, CN–Rescinded 7-7-1973.		
CO	...	Clearance hole for maximum size of clamp bolts for clamping universal motor stator cores.
CP, CR, CS, CT, CU, CV, CW, CX, CY, CZ, and DA–Rescinded 7-7-1973.		
DB	...	Outside diameter of rotor core.
DC	...	Distance from the end of stator shell (driven load end) to the end of rotor fan or end ring (driven load end). Where the shell is omitted, the dimensions is to the driven load end of the stator core.
DD	...	Distance from the end of stator shell (driven load end) to the end of rotor fan or end ring (Driven load end). Where the shell is omitted, the dimension is to the driven load end of the stator core.

Table 4-1 continued next page

Copyright National Electrical Manufacturers Association
Provided by IHS under license with NEMA
No reproduction or networking permitted without license from IHS
Not for Resale

Table 4-1 cont. ▲
LETTERING OF DIMENSION SHEETS

NEMA Letter	IEC Letter	Dimension Indicated
DE	...	Diameter inside coils, both ends (DE = 2 times minimum radius).
DF	...	Distance from driven load end of stator core or shell to centerline of mounting hole in lead clip or end of lead if no clip is used.
DG	...	Distance from driven load end of stator core or shell to end of stator coil (opposite driven load end).
DH	...	Centerline of foot mounting hole (shaft end) to centerline of secondary terminal housing mounting (side view).
DJ	...	Centerline of secondary lead terminal housing inlet to bottom of feet (horizontal).
DK	...	Center of machine to centerline of hole "DM" for secondary lead conduit entrance (end view).
DL	...	Centerline of secondary lead terminal housing inlet to entrance for conduit.
DM	...	Diameter of conduit (pipe size) for secondary lead terminal housing.
DN	...	Distance from the end of stator shell to the bottom of rotor counterbore (driven load end). Where the shell is omitted, the dimension is to the driven load end of the stator core.
DO	...	Dimension between centerlines of base mounting grooves for resilient ring mounted motors or, on base drawings, the dimension of the base which fits the groove.
DP	...	Radial distance from center of Type C face at end opposite drive to center of circle defining the available area for disc lead opening(s).
DQ	...	Centerline of shaft to extreme outside part of secondary terminal housing (end view).
DR to EK incl.	...	(No longer in use.)
EL	...	Diameter of shaft after emergence from the mounting surface of face or flange.
EM	...	Diameter of shaft first step after EL.
EN	...	Internal threaded portion of shaft extension.
EO	...	Top of coupling to underside of canopy of vertical hollow-shaft motor.
EP	...	Diameter of shaft at emergence from bearing (face or flange end).
EQ	...	Length of shaft from mounting surface of face or flange to EL-EM interface.
ER	...	Length of shaft from EP-EL interface to end of shaft.
ES	...	Usable length of keyseat.
ET	...	Length of shaft from mounting surface of face or flange to EM-U interface.
EU	...	Diameter of shaft at bottom of ring groove.
EV	...	Distance between centerline of H hole and end of motor foot at shaft end (side view).
EW	...	Width of the ring groove or gib head keyseat.
EX	...	Distance from end of shaft to opposite side of ring groove keyseat.
FBA	CA	Distance from the shoulder of the shaft at opposite drive end to the center-line of the mounting holes in the nearest feet.
FC	LC	Overall length of double shaft extension machine (For overall length of single shaft extension, see letter dimension C.)
FN-FW	EA	Length of the shaft extension from the shoulder at opposite drive end.
FR	GB	Distance from the bottom of the keyway to the opposite surface of the shaft extension at opposite drive end.
FS	FA	Width of the keyway of the shaft extension at opposite drive end.
FU	DA	Diameter of the shaft extension at opposite drive end.
FU-FR	GH	Depth of the keyway at the crown of the shaft extension at opposite drive end.

Copyright National Electrical Manufacturers Association
Provided by IHS under license with NEMA
No reproduction or networking permitted without license from IHS

Not for Resale

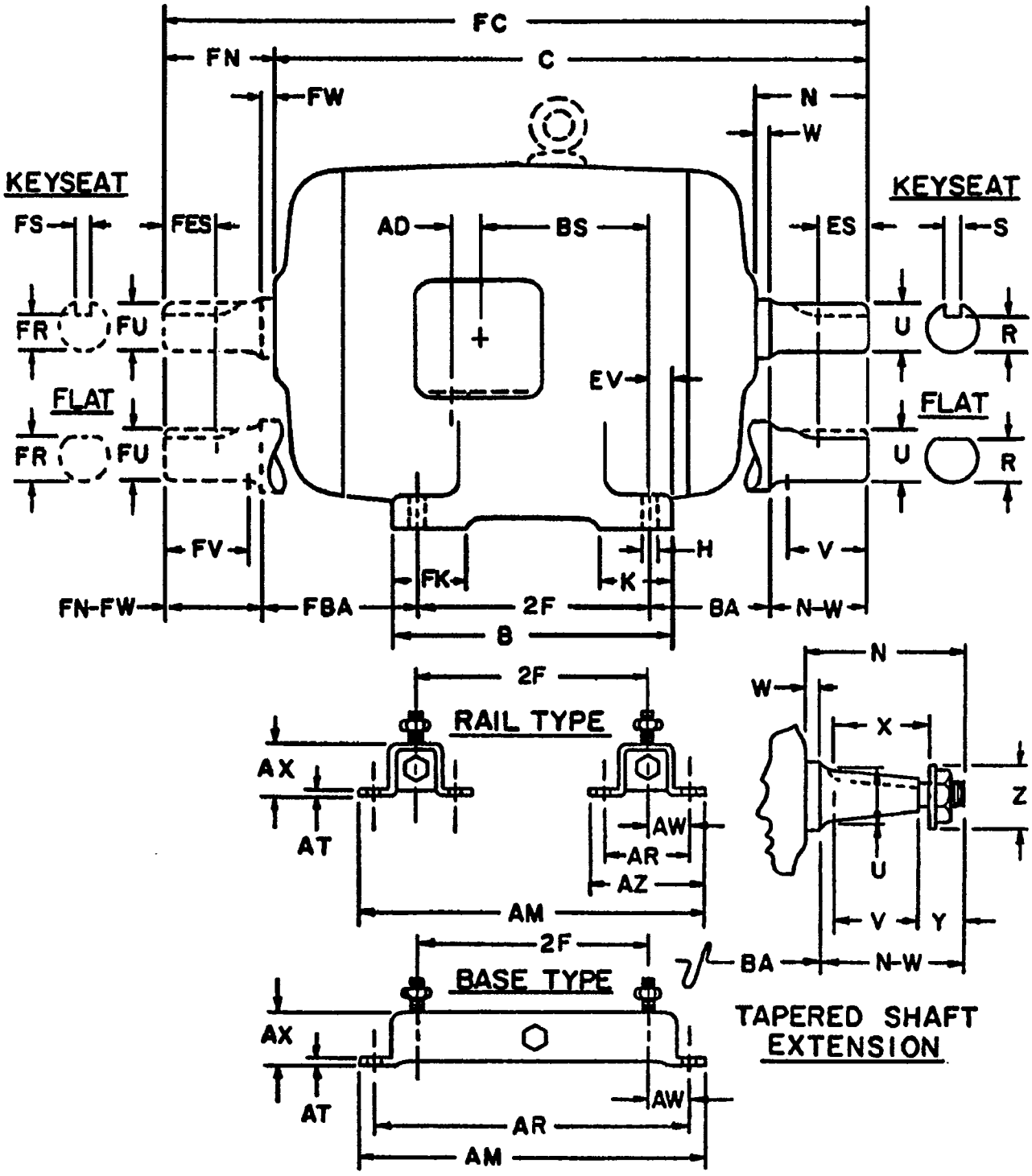

Figure 4-1
LETTERING OF DIMENSION SHEETS FOR FOOT-MOUNTED MACHINES—SIDE VIEW

Copyright National Electrical Manufacturers Association
Provided by IHS under license with NEMA
No reproduction or networking permitted without license from IHS

Not for Resale

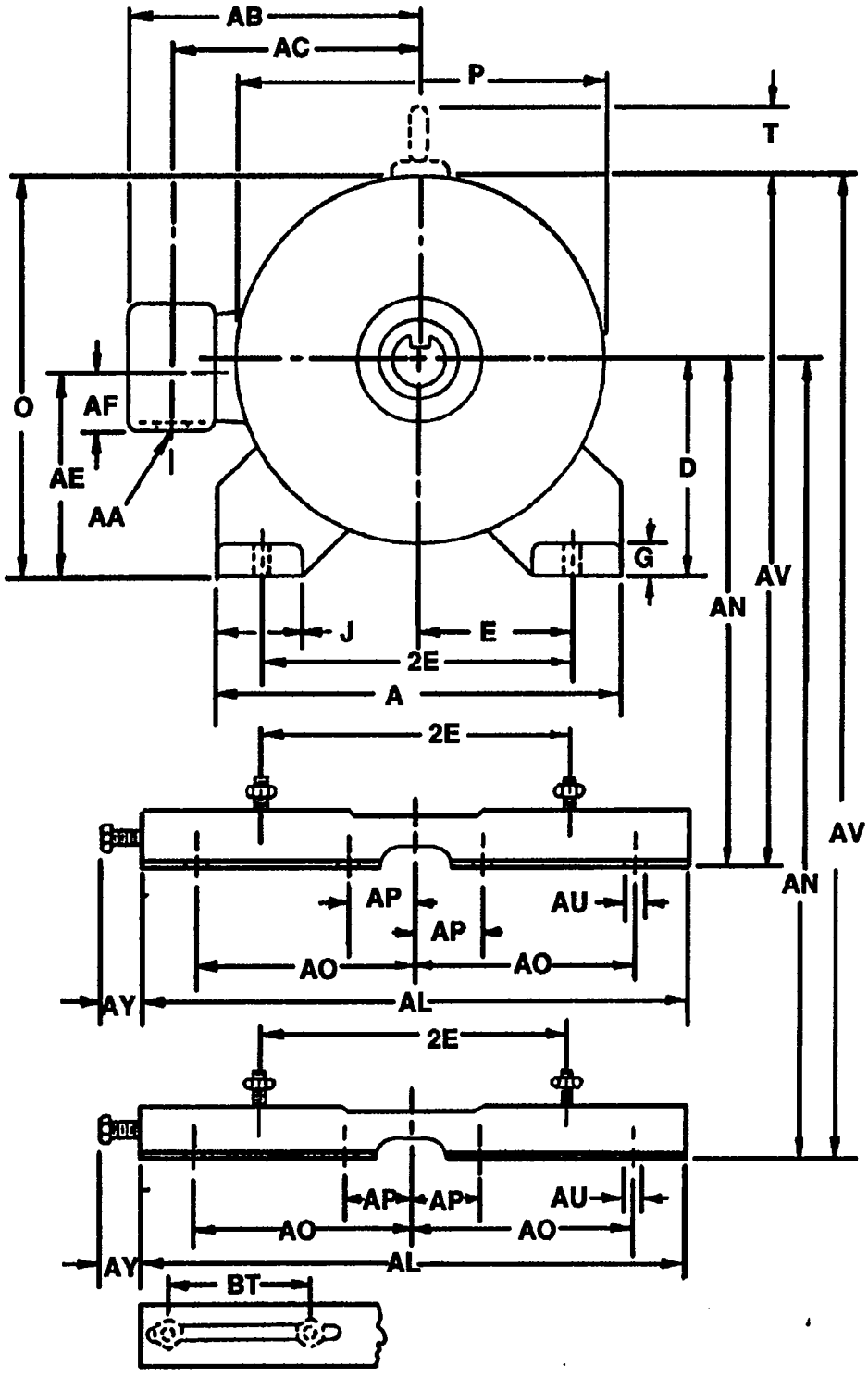

Figure 4-2
LETTERING OF DIMENSION SHEETS FOR FOOT-MOUNTED MACHINES—DRIVE END VIEW

Copyright National Electrical Manufacturers Association
Provided by IHS under license with NEMA
No reproduction or networking permitted without license from IHS

Not for Resale

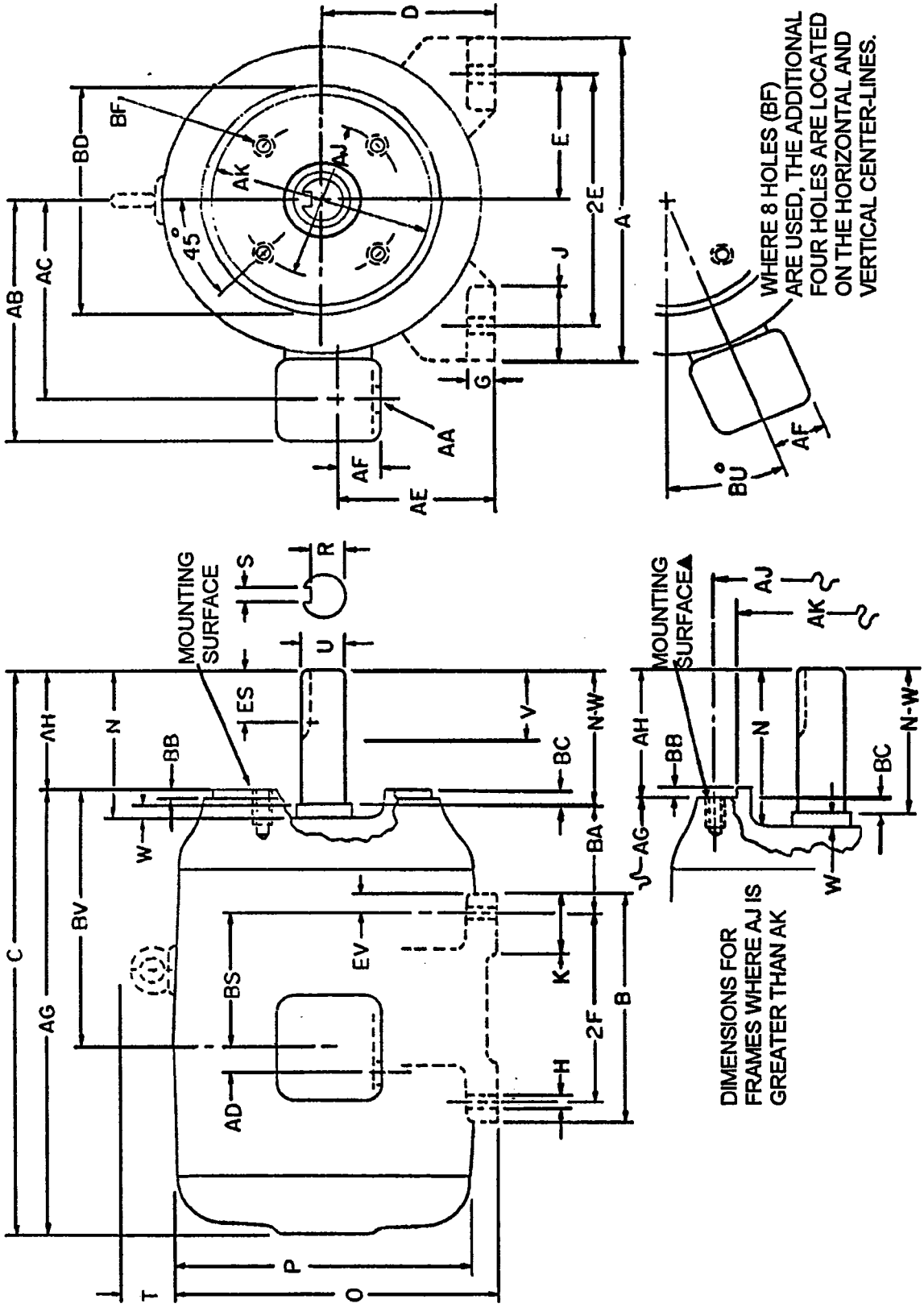

Figure 4-3
LETTERING OF DIMENSION SHEETS FOR TYPE C FACE-MOUNTING FOOT OR FOOTLESS MACHINES

Copyright National Electrical Manufacturers Association
Provided by IHS under license with NEMA
No reproduction or networking permitted without license from IHS
Not for Resale

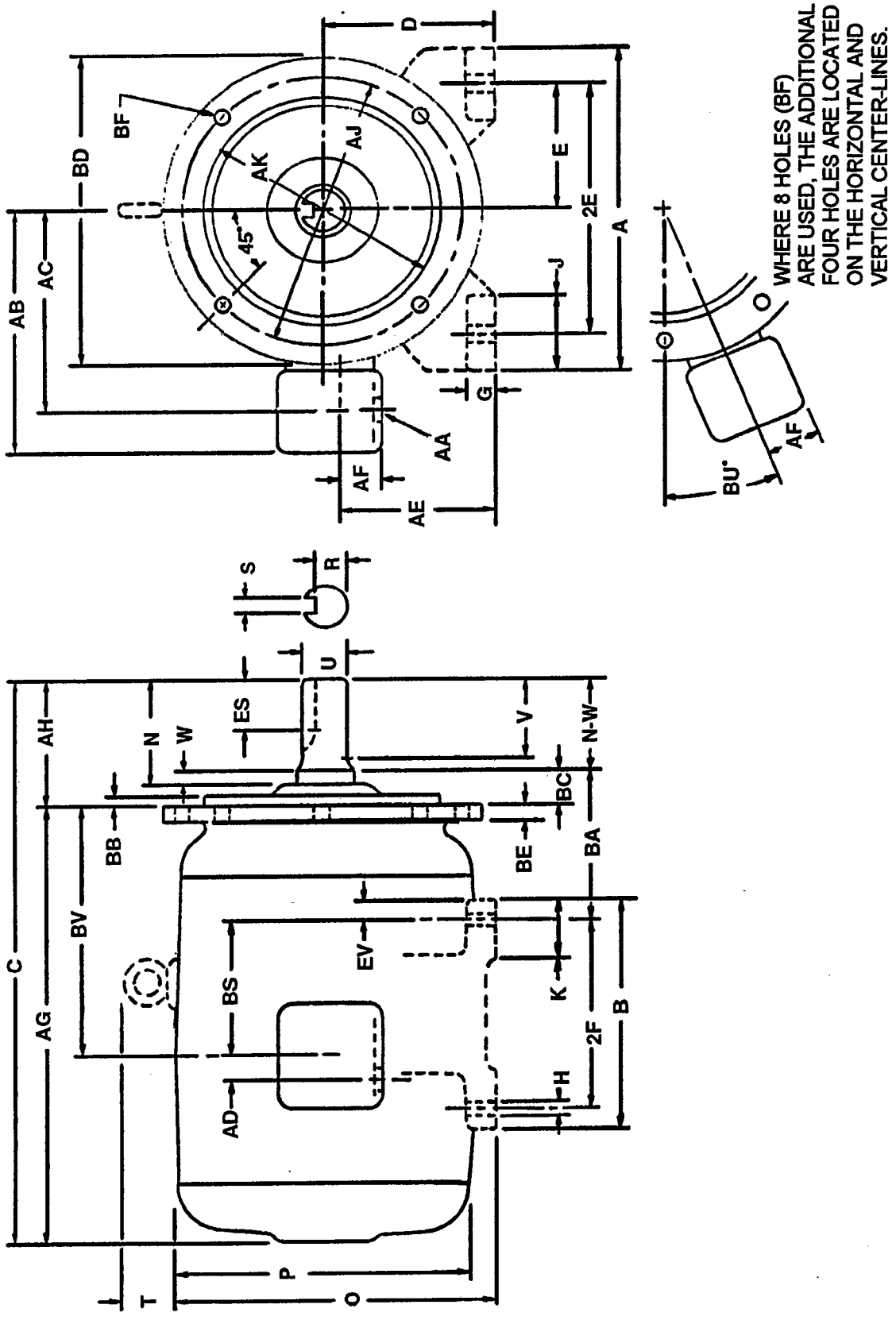

Figure 4-4
LETTERING OF DIMENSION SHEETS FOR TYPE D FLANGE-MOUNTING FOOT OR FOOTLESS MACHINES

Copyright National Electrical Manufacturers Association
Provided by IHS under license with NEMA
No reproduction or networking permitted without license from IHS
Not for Resale

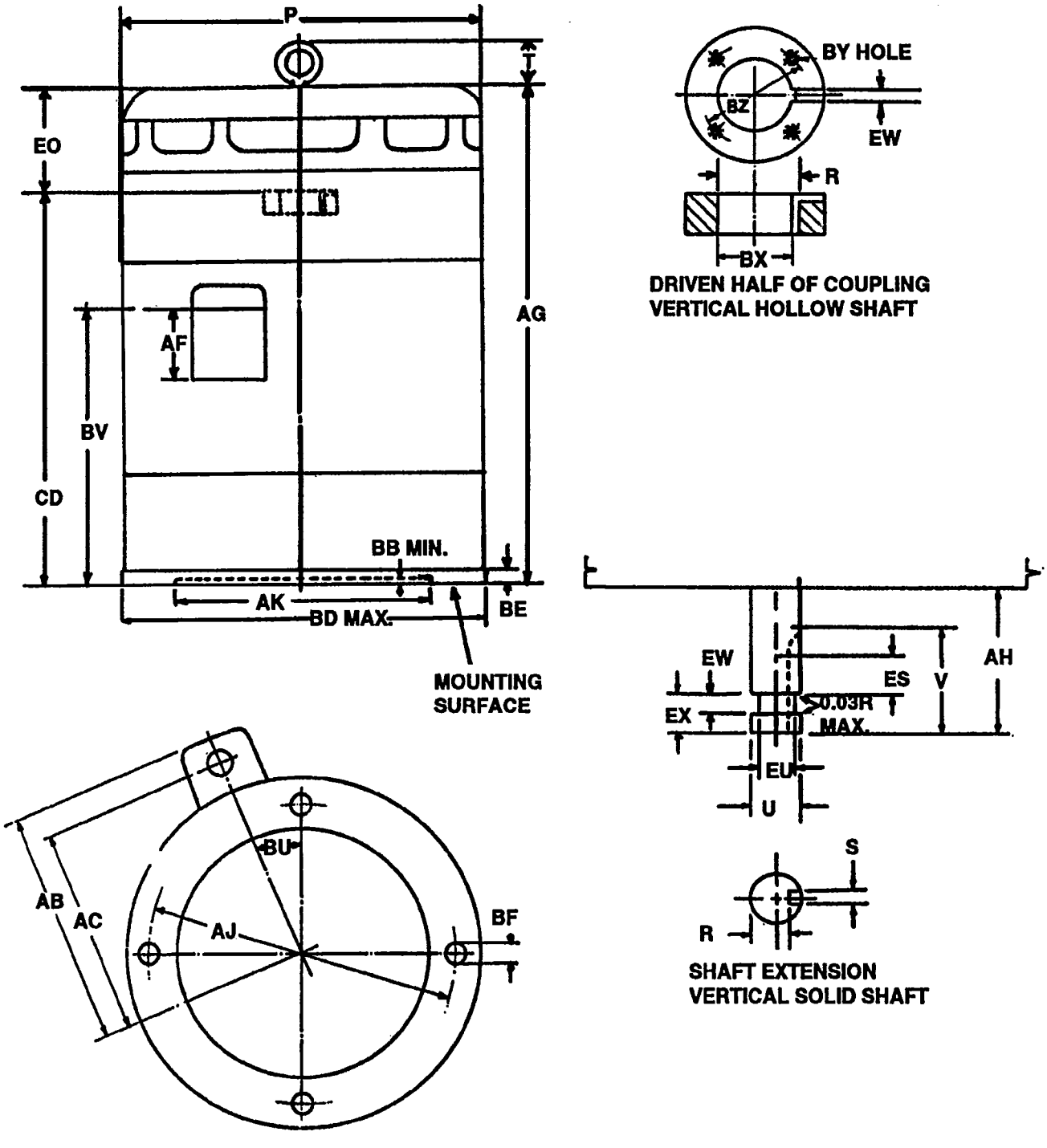

Figure 4-5
LETTERING OF DIMENSION SHEETS FOR VERTICAL MACHINES

Copyright National Electrical Manufacturers Association
Provided by IHS under license with NEMA
No reproduction or networking permitted without license from IHS

Not for Resale

4.02 MOTOR MOUNTING AND TERMINAL HOUSING LOCATION

The motor mounting and location of terminal housing shall be as shown in assembly symbol F-1 of Figure 4-6. Where other motor mountings and terminal housing locations are required, they shall be designated in accordance with the symbols shown in Figure 4-6.

4.03 SYMBOLS FOR MACHINE MOUNTING ASSEMBLIES

Assembly symbols for floor-, wall-, and ceiling-mounting machines shall be as shown in Figure 4-6.

Assembly symbols F-1, W-2, W-3, W-6, W-8, and C-2 show the terminal housing in the same relative location with respect to the mounting feet and the shaft extension.

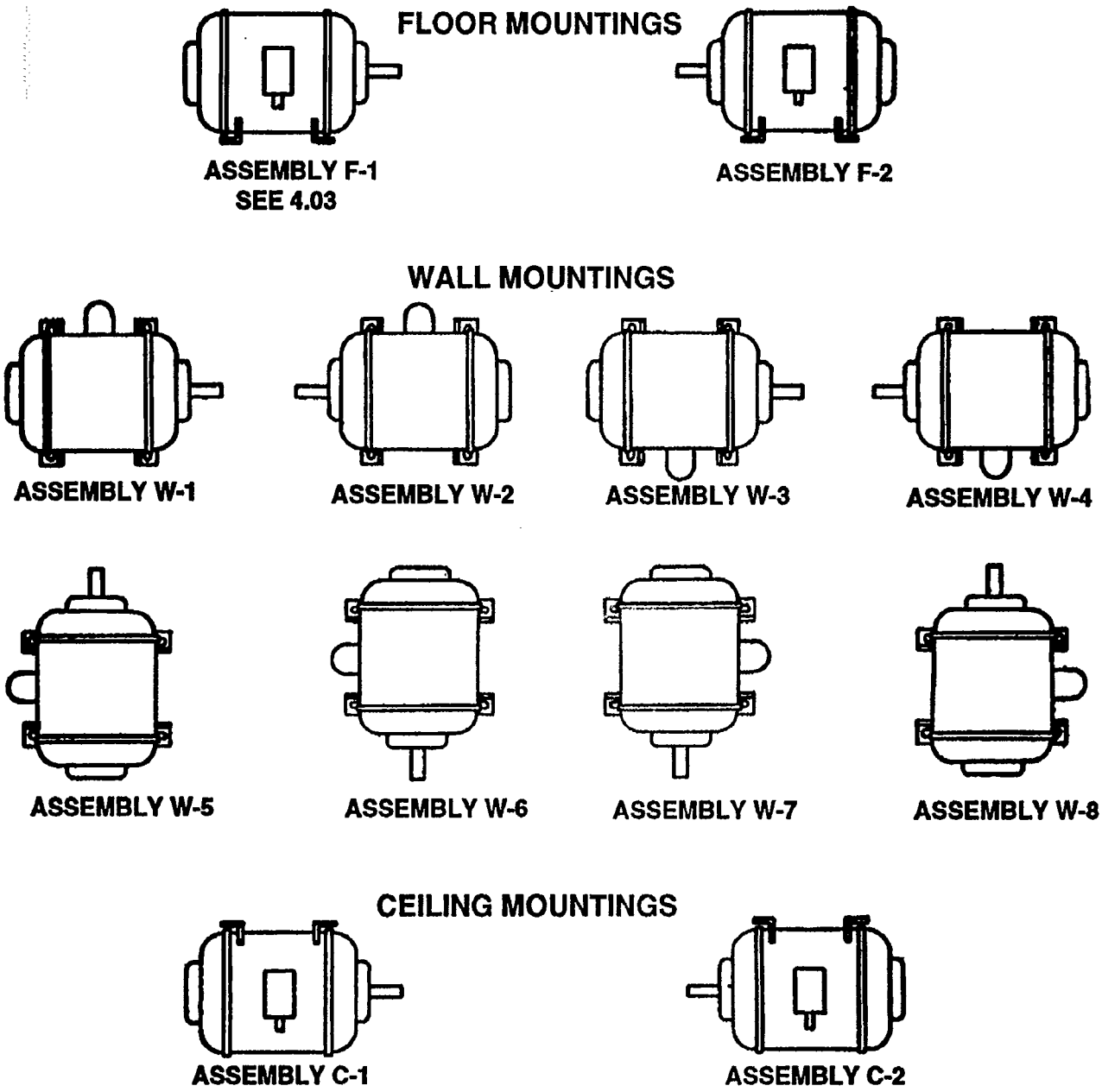

Figure 4-6
MACHINE ASSEMBLY SYMBOLS

Copyright National Electrical Manufacturers Association
Provided by IHS under license with NEMA
No reproduction or networking permitted without license from IHS

Not for Resale

4.04 KNOCKOUT AND CLEARANCE HOLE DIAMETER FOR MACHINE TERMINAL BOXES

The diameter of the knockout, excluding any projection of breakout ears or tabs, and the clearance hole in the terminal box of a machine shall be in accordance with the following:

Conduit Size, Inches	Knockout or Clearance Hole Diameter, Inches		
	Nominal	Minimum	Maximum
½	0.875	0.859	0.906
¾	1.109	1.094	1.141
1	1.375	1.359	1.406
1¼	1.734	1.719	1.766
1½	1.984	1.969	2.016
2	2.469	2.453	2.500
2½	2.969	2.953	3.000
3	3.594	3.578	3.625
3½	4.125	4.094	4.156
4	4.641	4.609	4.672
5	5.719	5.688	5.750
6	6.813	6.781	6.844

4.05 TOLERANCES ON SHAFT EXTENSION DIAMETERS AND KEYSEATS

4.05.1 The tolerances on shaft extension diameters shall be:

Shaft Diameter, Inches	Tolerances, Inches	
	Plus	Minus
0.1875 to 1.5000, incl.	0.000	0.0005
Over 1.5000 to 6.500, incl.	0.000	0.001

4.05.2 The tolerance on the width of shaft extension keyseats shall be:

Width of Keyseat, Inches	Tolerances, Inches	
	Plus	Minus
0.188 to 0.750, incl.	0.002	0.000
Over 0.750 to 1.500, incl.	0.003	0.000

4.05.3 The tolerance from the bottom of the keyseat to the opposite side of a cylindrical shaft extension shall be +0.000 inch, -0.015 inch.

The tolerance on the depth of shaft extension keyseats for tapered shafts shall be +0.015 inch, -0.000 inch.

4.05.4 The tolerance for making keyseats parallel to the centerline of the shaft shall be:

a. For V dimensions up to and including 4.00 inches—0.002 inch;
b. For V dimensions greater than 4.00 inches up to and including 10.00 inches—0.0005 inch per inch of V dimension;
c. For V dimensions exceeding 10.00 inches—0.005 inch.

4.05.5 The tolerance for the lateral displacement of all keyseats shall be 0.010 inch (0.250 mm). It is defined as the greatest deviation at any point along the usable length of keyseat. This deviation is the distance from the centerline of the keyseat to the plane through the centerline of the shaft extension perpendicular to the true position of the bottom of the keyseat. See Figure 4-7.

4.05.6 The cylyndrical shaft extension diamteters and keyseat dimensions for square keys shall be as shown in Table 4-2.

4.05.7 The tolerance for the permissible shaft runout, when measured at the end of the shaft extension, shall be (see 4.07):

a. For 0.1875- to 1.625-inch diameter shafts, inclusive—0.002-inch indicator reading.
b. For over 1.625- to 6.500-inch diameter shafts, inclusive—0.003-inch indicator reading.

NOTE—Standards have not been established for shaft runouts where the shaft extension length exceeds the standard. However, runouts for shafts longer than standard are usually greater than those indicated above.

Copyright National Electrical Manufacturers Association
Provided by IHS under license with NEMA
No reproduction or networking permitted without license from IHS
Not for Resale

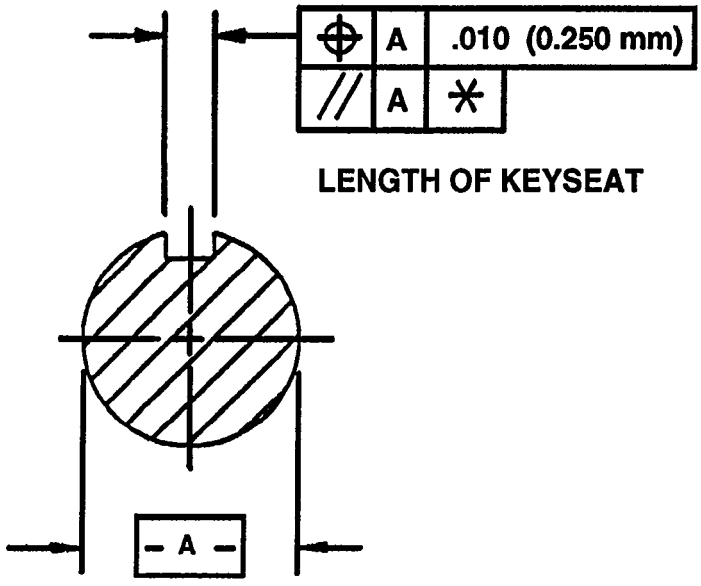

* .002 IN (0.051 mm) V≤ 4 IN (102 mm)
.0005 IN (0.013 mm) /IN V> 4 IN (102 mm)
.005 IN (0.0127 mm) V> 10 IN (250 mm)

⊕ TRUE POSITION
// PARALLELISM
-A- DATUM

Figure 4-7
KEYSEAT LATERAL DISPLACEMENT

Copyright National Electrical Manufacturers Association
Provided by IHS under license with NEMA
No reproduction or networking permitted without license from IHS

Not for Resale

Table 4-2
CYLINDRICAL SHAFT EXTENSION DIAMETERS AND KEYSEAT DIMENSIONS FOR SQUARE KEYS

Shaft Diameter, U Inches	Keyseat Width, S Inches	Bottom of Keyseat to Opposite Side of Cylindrical Shaft, R Inches
0.1875	Flat	0.178
0.2500	Flat	0.235
0.3125	Flat	0.295*
0.3750	Flat	0.328
0.5000	Flat	0.453
0.6250	0.188	0.517
0.7500	0.188	0.644
0.8750	0.188	0.771
1.0000	0.250	0.859
1.1250	0.250	0.986
1.2500	0.250	1.112
1.3750	0.312	1.201
1.5000	0.375	1.289
1.625	0.375	1.416
1.750	0.375	1.542
1.875	0.500	1.591
2.000	0.500	1.718
2.125	0.500	1.845
2.250	0.500	1.972
2.375	0.625	2.021
2.500	0.625	2.148
2.625	0.625	2.275
2.750	0.625	2.402
2.875	0.750	2.450
3.000	0.750	2.577
3.125	0.750	2.704
3.250	0.750	2.831
3.375	0.875	2.880
3.500	0.875	3.007
3.625	0.875	3.134
3.750	0.875	3.261
3.875	1.000	3.309
4.000	1.000	3.436
4.250	1.000	3.690
4.375	1.000	3.817
4.500	1.000	3.944
Over 4.500 to 5.500	1.250	**
Over 5.500 to 6.500	1.500	**

*Suggested Standard for Future Design.

$$**R = \frac{U - S + \sqrt{U^2 - S^2}}{2}$$

4.06 RING GROOVE SHAFT KEYSEATS FOR VERTICAL SHAFT MOTORS

Dimensions and tolerances for ring groove shaft keyseats shall be in accordance with Table 4-3.

Table 4-3
DIMENSIONS AND TOLERANCES FOR RING GROOVE KEYSEATS

U, Inches	EU*, Inches	EW, Inches	EX, Inches
0.8750 through 1.0000	U-(0.1875)	0.377 0.375	0.750 0.745
1.1250 through 1.5000	U-(0.250)	0.377 0.375	0.750 0.745
1.625 through 2.500	U-(0.375)	0.377 0.375	0.750 0.745
2.625 through 4.500	U-(0.500)	0.503 0.500	1.000 0.990
4.625 through 6.000	U-(0.750)	0.755 0.750	1.500 1.485

*Tolerance on ring keyseat diameter (EU)

Nominal Shaft Diameter, Inches	Tolerance, Inches
0.875 to 2.500, incl.	+0.000/-0.005
2.625 to 4.500, incl.	+0.000/-0.010
4.625 to 6.000, incl.	+0.000/-0.015

4.07 METHOD OF MEASUREMENT OF SHAFT RUNOUT AND OF ECCENTRICITY AND FACE RUNOUT OF MOUNTING SURFACES

4.07.1 Shaft Runout

The shaft runout shall be measured with the indicator stationary with respect to the motor and with its point at the end of the finished surface of the shaft. See Figures 4-8 and 4-9 for typical fixtures.

Read the maximum and minimum values on the indicator as the shaft is rotated slowly through 360 degrees. The difference between the readings shall not exceed the specified value.

4.07.2 Eccentricity and Face Runout of Mounting Surfaces

The eccentricity and face runout of the mounting surfaces shall be measured with indicators mounted on the shaft extension. The point of the eccentricity indicator shall be at approximately the middle of the rabbet surface, and the point of the face runout indicator shall be at approximately the outer diameter of the mounting face. See Figure 4-10 for typical fixture.

Copyright National Electrical Manufacturers Association
Provided by IHS under license with NEMA
No reproduction or networking permitted without license from IHS
Not for Resale

Read the maximum and minimum values on the indicators as the shaft is rotated slowly through 360 degrees. The difference between the readings shall not exceed the specified value.

NOTE—On ball-bearing motors, it is recommended that the test be made with the shaft vertical to minimize the effect of bearing clearances.

4.08 TOLERANCES FOR TYPE C FACE MOUNTING AND TYPE D FLANGE MOUNTING MOTORS

For Type C face-mounting and Type D flange-mounting motors, the tolerance on the mounting rabbet diameter, the maximum face runout, and the maximum eccentricity of the mounting rabbet shall be as in Table 4-4 when measured in accordance with 4.07.

Table 4-4
MAXIMUM ECCENTRICITY OF MOUNTING RABBET

AK Dimension Inches	Tolerance on AK Dimension, Inches		Maximum Face Runout, Inches	Maximum Permissible Eccentricity of Mounting Rabbet Inches
	Plus	Minus		
<12	0.000	0.003	0.004	0.004
≥12 to 24	0.000	0.005	0.007	0.007
>24 to 40	0.000	0.007	0.009	0.009

4.09 TOLERANCES FOR TYPE P FLANGE-MOUNTING MOTORS

For Type P flange-mounting motors (see Figure 4-5), the tolerance on the mounting rabbet diameter, the maximum face runout, and the maximum eccentricity of the mounting rabbet shall be as in Table 4-5 when measured in accordance with 4.07.

4.10 MOUNTING BOLTS OR STUDS

Bolts or studs used for installing foot-mounting machines may be one size smaller than the maximum size permitted by the foot hole diameter if Grade 5 or 8 fasteners and heavy duty washers are used. Doweling after alignment is recommended.

NOTE—For the definition of Grade 5 or 8 fasteners refer to ANSI/SAE Standard J429.

Table 4-5
MAXIMUM ECCENTRICITY OF MOUNTING RABBET

AK Dimension, Inches	Tolerance on AK Dimension, Inches		Maximum Face Runout, Inches	Maximum Permissible Eccentricity of Mounting Rabbet Inches
	Plus	Minus		
<12	0.003	0.000	0.004	0.004
≥12 to 24	0.005	0.000	0.007	0.007
>24 to 40	0.007	0.000	0.009	0.009
>40 to 60	0.010	0.000	0.012	0.012

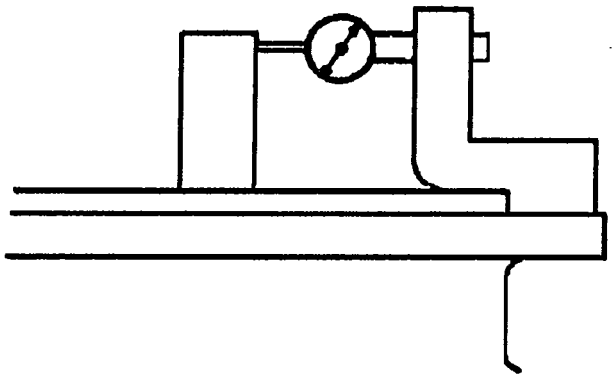

Figure 4-8
SHAFT RUNOUT

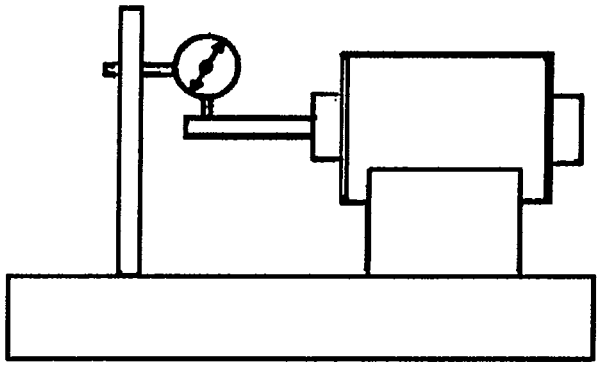

Figure 4-9
SHAFT RUNOUT

Copyright National Electrical Manufacturers Association
Provided by IHS under license with NEMA
No reproduction or networking permitted without license from IHS

Not for Resale

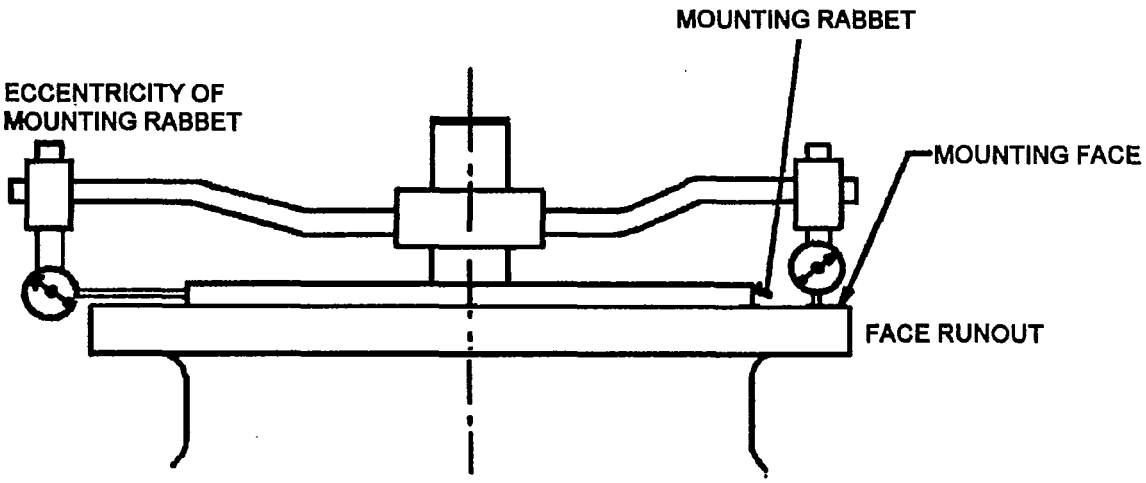

Figure 4-10
ECCENTRICITY AND FACE RUNOUT OF MOUNTING SURFACES

Copyright National Electrical Manufacturers Association
Provided by IHS under license with NEMA
No reproduction or networking permitted without license from IHS

Not for Resale

Section I
GENERAL STANDARDS APPLYING TO ALL MACHINES
Part 5
ROTATING ELECTRICAL MACHINES —CLASSIFICATION OF DEGREES OF PROTECTION PROVIDED BY ENCLOSURES FOR ROTATING MACHINES (SUGGESTED STANDARD FOR FUTURE DESIGN)

5.01 SCOPE

This Part applies to the classification of degrees of protection provided by enclosures for rotating machines.

5.02 OBJECT

The object of Part 5 is to describe:

a. Definitions for standard degrees of protection provided by enclosures applicable to electrical rotating machines as regards:
   1. Protection of persons against contact with or approach to live parts and against contact with moving parts (other than smooth rotating shafts and the like) inside the enclosure and protection of the machine against ingress of solid foreign objects
   2. Protection of machines against the harmful effects due to the ingress of water
b. Designations for these protective degrees
c. Tests to be performed to check that the machines meet the requirements of this Part.

Part 5 defines the requirements with which protective enclosures shall comply.

Part 5 deals only with enclosures that are in all other respects suitable for their intended use and which from the point of view of materials and workmanship ensure that the properties dealt with in this Part are maintained under the normal conditions of use.

This Part does not specify degrees of protection against mechanical damage of the machine, or conditions such as moisture (produced for example by condensation) corrosive vapors, fungus or vermin. This Part does not specify types of protection of machines for the use in an explosive atmosphere.

Fences external to the enclosure which have to be provided solely for the safety of personnel are not considered part of the enclosure and are not dealt with.

5.03 DESIGNATION

The designation used for the degree of protection consists of the letters IP followed by two characteristic numerals signifying conformity with the conditions indicated in the tables of 5.04 and 5.05 respectively.

5.03.1 Single Characteristic Numeral

When it is required to indicate a degree of protection by only one characteristic numeral, the omitted numeral shall be replaced by the letter X. For example IPX5 or IP2X.

5.03.2 Supplementary Letters

Additional information may be indicated by a supplementary letter following the second characteristic numeral. If more than one letter is used, the alphabetic sequence shall apply.

5.03.2.1 LETTERS FOLLOWING NUMERALS

In special applications (such as machines with open circuit cooling for ship deck installation with air inlet and outlet openings closed during standstill) numerals may be followed by a letter indicating whether the protection against harmful effects due to ingress of water was verified or tested for the machine not running (letter S) or the machine running (letter M). In this case the degree of protection in either state of the machine shall be indicated, for example IP55S/IP20M.

The absence of the letters S and M shall imply that the intended degree of protection will be provided under all normal conditions of use.

5.03.2.2 LETTERS PLACED IMMEDIATELY AFTER THE LETTERS IP

For open internally air-cooled machines suitable under specific weather conditions and provided with additional protective features or processes (as specified in 5.10), the letter W may be used.

An "open machine" is a machine with an open cooling circuit in which the coolant is drawn directly from the surrounding medium passing through the machine and then returning directly to the surrounding medium.

5.03.3 Example of Designation

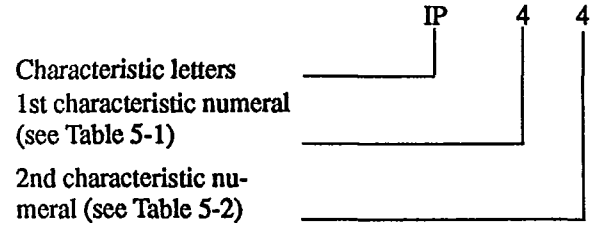

Copyright National Electrical Manufacturers Association
Provided by IHS under license with NEMA
No reproduction or networking permitted without license from IHS
Not for Resale

5.03.4 The most frequently used degrees of protection for electrical machines are given in Appendix A.

5.04 DEGREES OF PROTECTION—FIRST CHARACTERISTIC NUMERAL

5.04.1 The first characteristic numeral indicates the degree of protection provided by the enclosure with respect to persons and also to the parts of the machine inside the enclosure.

Table 5-1 gives, in column 3, brief details of objects which will be "excluded" from the enclosure for each of the degrees of protection represented by the first characteristic numeral.

The term "excluded" implies that a part of the body, or a tool or a wire held by a person, either will not enter the machine or, if it enters, that adequate clearance will be maintained between it and the live parts or dangerous moving parts (smooth rotating shafts and the like are not considered dangerous).

Column 3 of Table 5-1 also indicates the minimum size of solid foreign objects which will be excluded.

5.04.2 Compliance of an enclosure with an indicated degree of protection implies that the enclosure will also comply with all lower degrees of protection in Table 5-1. In consequence, the tests establishing these lower degrees of protection are not required, except in case of doubt.

5.04.3 External Fans

The blades and spokes of fans external to the enclosure shall be protected against contact by means of guards complying with the following requirements.

Protection of machine	Test of fan
IP 0X	———
IP 1X	50 mm sphere test
IP 2X to IP 5X	Finger test

For the test, the rotor is slowly rotated by hand.

Smooth rotating shafts and similar parts are not considered dangerous.

NOTE—In certain applications (such as agricultural or domestic appliances) more extensive precautions against accidental or deliberate contact may be required if specified.

5.04.4 Drain Holes

If the machine is provided with drain holes, the following shall apply.

a. Drain holes intended normally to be open on site shall be kept open during testing.
b. Drain holes intended normally to be closed on site shall be kept closed during testing.
c. If machines with protection IP 3X or IP 4X are intended to be run with open drain holes, the drain holes may comply with protection IP 2X.
d. If machines with protection IP 5X are intended to be run with open drain holes, the drain holes shall comply with protection IP 4X.

5.05 DEGREES OF PROTECTION—SECOND CHARACTERISTIC NUMERAL

5.05.1 The second characteristic numeral indicates the degree of protection provided by the enclosure with respect to harmful effect due to ingress of water.

Table 5-2 gives, in column 3, details of the type of protection provided by the enclosure for each of the degrees of protection represented by the second characteristic numeral.

A machine is weather-protected when its design reduces the ingress of rain, snow and airborne particles, under specified conditions, to an amount consistent with correct operation.

This degree of protection is designated by the letter W placed after the two characteristic numerals.

5.05.2 Compliance of an enclosure with an indicated degree of protection implies that the enclosure will also comply with all lower degrees of protection in Table 5-2.

In consequence, the tests establishing these lower degrees of protection are not required, except in case of doubt.

5.06 MARKING

It is recommended that the characteristic letters and numerals be marked on the machine preferably on the rating plate, or, if this is not practicable, on the enclosure.

When all parts of a machine do not have the same degree of protection, the designation of the lowest degree shall be shown first, followed if applicable by the other designation with reference to the part to which it applies.

Where the mounting of the machine has an influence on the degree of protection, the intended mounting arrangement shall be indicated by the manufacturer on the rating plate or in his instructions for mounting or the like.

5.07 GENERAL REQUIREMENTS FOR TESTS

The tests specified in this standard are type tests. They shall be carried out on standard products or models of them. Where this is not feasible, either verification by test or acceptance by examination of drawings should be the subject of an agreement between manufacturer and user.

Unless otherwise specified, the samples of machines for each test shall be in clean and new condition, with all the parts in place and mounted in the manner stated by the manufacturer.

In the case of first characteristic numerals 1 and 2 and second characteristic numerals 1, 2, 3, and 4, a visual inspection may, in certain obvious cases, show that the intended degree of protection is obtained. In such cases, no test need be made. However, in case of doubt, tests are to be made as prescribed in 5.08 and 5.09.

Copyright National Electrical Manufacturers Association
Provided by IHS under license with NEMA
No reproduction or networking permitted without license from IHS

Not for Resale

5.07.1 Adequate Clearance

For the purpose of the following test clauses in this standard, the term "adequate clearance" has the following meaning.

5.07.1.1 LOW-VOLTAGE MACHINES (RATED VOLTAGES NOT EXCEEDING AC: 1000 V AND DC: 1500 V)

The test device (sphere, finger, wire, etc.) does not touch the live parts or moving parts other than non-dangerous parts such as smooth rotating shafts.

5.07.1.2 HIGH-VOLTAGE MACHINES (RATED VOLTAGES EXCEEDING AC: 1000 V AND DC: 1500 V)

When the test device is placed in the most unfavorable position(s), the machine shall be capable of withstanding the dielectric test applicable to the machine.

This dielectric test requirement may be replaced by a specified clearance dimension in air which would ensure that this test would be satisfactory under the most unfavorable electrical field configuration.

5.08 TESTS FOR FIRST CHARACTERISTIC NUMERAL

Test and acceptance conditions for first characteristic numeral are given in Table 5-3.

Table 5-1
DEGREES OF PROTECTION INDICATED BY THE FIRST CHARACTERISTIC NUMERAL

First Characteristic Numeral	Degree of Protection		Test Conditions
	Brief Description*	Definition	
0	Non-protected machine	No special protection	No test, but see 5.04.3
1**	Machine protected against solid objects greater than 50 mm	Accidental or inadvertent contact with or approach to live and moving parts inside the enclosure by a large surface of the human body, such as a hand (but no protection against deliberate access). Ingress of solid objects exceeding 50 mm in diameter.	Table 5-3
2 **	Machine protected against solid objects greater than 12mm	Contact by fingers or similar objects not exceeding 80 mm in length with or approach to live or moving parts inside the enclosure. Ingress of solid objects exceeding 12 mm in diameter.	Table 5-3
3 **	Machine protected against solid objects greater than 2.5 mm	Contact with or approach to live or moving parts inside the enclosure by tools or wires exceeding 2.5 mm in diameter. Ingress of solid objects exceeding 1 mm in diameter.	Table 5-3
4 **	Machine protected against solid objects greater than 1 mm	Contact with or approach to live or moving parts inside the enclosure by wires or strips of thickness greater than 1 mm in diameter.	Table 5-3
5 †	Dust-protected machine	Contact with or approach to live or moving parts inside the enclosure. Ingress of dust is not totally prevented but dust does not enter in sufficient quantity to interfere with satisfactory operation of the machine.	Table 5-3
6 †	Dust-tight machine	Contact with or approach to live or moving parts inside the enclosure. No ingress of dust.	Table 5-3

*The brief description given in column 2 on this table should not be used to specify the form of protection.

**Machines assigned a first characteristic numeral 1, 2, 3 or 4 will exclude both regularly or irregularly shaped solid objects provided that three normally perpendicular dimensions of the object exceed the appropriate figure in column "Definition."

†The degree of protection against dust defined by this standard is a general one. When the nature of the dust (dimensions of particles, their nature, for instance fibrous particles) is specified, test conditions should be determined by agreement between manufacturer and user.

Copyright National Electrical Manufacturers Association
Provided by IHS under license with NEMA
No reproduction or networking permitted without license from IHS
Not for Resale

Table 5-2
DEGREES OF PROTECTION INDICATED BY THE SECOND CHARACTERISTIC NUMERAL

Second Characteristic Numeral	Degree of Protection		Test Conditions
	Brief Description	Definition	
0	Non-protected machine	No special protection	No test
1	Machine protected against dripping water	Dripping water (vertically falling drops) shall have no harmful effect.	Table 5-4
2	Machine protected against dripping water when tilted up to 15°	Vertically dripping water shall have no harmful effect when the machine is tilted at any angle up to 15° from its normal position.	Table 5-4
3	Machine protected against spraying water	Water falling as a spray at an angle up to 60° from the vertaical shall have no harmful effect.	Table 5-4
4	Machine protected against splashing water	Water splashing against the machine from any direction shall have no harmful effect.	Table 5-4
5	Machine protected against water jets	Water projected by a nozzle against the machine from any direction shall have no harmul effect.	Table 5-4
6	Machine protected against heavy seas	Water from heavy seas or water projected in powerful jets shall not enter the machine in harmful quantities.	Table 5-4

*The brief description given in Column 2 of this table should not be used to specify the form of protection.

Copyright National Electrical Manufacturers Association
Provided by IHS under license with NEMA
No reproduction or networking permitted without license from IHS
Not for Resale

Table 5-3
TEST AND ACCEPTANCE CONDITIONS FOR FIRST CHARACTERISTIC NUMERAL

First Characteristic Numeral	Test and Acceptance Conditions
0	No test is required.
1	The test is made with a rigid sphere of $50\ ^{+0.05}_{-0}$ mm diameter applied against the opening(s) in the enclosure with a force of 50 N±10 percent. The protection is satisfactory if the sphere does not pass through any opening and adequate clearance is maintained to parts which are normally live in service or moving parts inside the machine.
2	**a. Finger test** The test is made with a metallic test finger as shown in Figure 5-1. Both joints of this finger may be bent through an angle of 90° with respect to the axis of the finger, but in one and the same direction only. The finger is pushed without undue force (not more than 10 N) against any openings in the enclosure and, if it enters, it is placed in every possible position. The protection is satisfactory if adequate clearance is maintained between the test finger and live or moving parts inside the enclosure. However, it is permissible to touch smooth rotating shafts and similar non-dangerous parts. For this test, the internal moving parts may be operated slowly, where this is possible. For tests on low-voltage machines, a low-voltage supply (of not less than 40 V) in series with a suitable lamp may be connected between the test finger and the live parts inside the enclosure. Conducting parts covered only with varnish or paint, or protected by oxidation or by a similar process, shall be covered with a metal foil electrically connected to those parts that are normally live in service. The protection is satisfactory if the lamp does not light. For high-voltage machines, adequate clearance is verified by a dielectric test, or by a measurement of clearance distance in accordance with the principles of 5.07.1.2. **b. Sphere test** The test is made with a rigid sphere of $12.0\ ^{+0.05}_{-0}$ mm diameter applied to the openings of the enclosure with a force of 30 N±10 percent. The protection is satisfactory if the sphere does not pass through any opening and adequate clearance is maintained to live or moving parts inside the machine.
3	The test is made with a straight rigid steel wire or rod of 2.5 mm diameter applied with a force of 3 N±10 percent. The end of the wire or rod shall be free from burrs and at right angles to its length. The protection is satisfactory if the wire or rod cannot enter the enclosure (see 5.04.4).
4	The test is made with a straight rigid steel wire of 1 mm diameter applied with a force of 1 N±10 percent. The end of the wire shall be free from burrs and at right angles to its length. The protection is satisfactory if the wire cannot enter the enclosure (see 5.04.4).

Table 5-3 continued next page

Copyright National Electrical Manufacturers Association
Provided by IHS under license with NEMA
No reproduction or networking permitted without license from IHS
Not for Resale

Table 5-3 cont.
TEST AND ACCEPTANCE CONDITIONS FOR FIRST CHARACTERISTIC NUMERAL

First Characteristic Numeral	Test and Acceptance Conditions
5	**a. Dust test** The test is made using equipment incorporating the basic principles shown in Figure 5-2, in which talcum powder is maintained in suspension in a suitable closed test chamber. The talcum powder used shall be able to pass through a square-meshed sieve whose nominal wire diameter is 50 μm and the nominal width between wires is 75 μm. The amount of talcum powder to be used is 2 kg per cubic meter of the test chamber volume. It shall not have been used for more than 20 tests. Electrical machines have an enclosure where the normal operating cycle of the machine causes reductions in the air pressure within the enclosure in relation to the ambient atmospheric pressures. These reductions may be due, for example, to thermal cycling effects (category I). For this test the machine is supported inside the test chamber and the pressure inside the machine is maintained below atmospheric pressure by a vacuum pump. If the enclosure has a single drain hole, the suction connection shall be made to one hole specially provided for the purpose of the test, except if the drain hole is intended normally to be closed on site (see 5.04.4). The object of the test is to draw into the machine, if possible, at least 80 times the volume of air in the enclosure without exceeding an extraction rate of 60 volumes per hour with a suitable depression. In no event shall the depression exceed 20 mbar on the manometer shown in Figure 5-2. If an extraction rate of 40 to 60 volumes per hour is obtained, the test is stopped after 2 hours. If, with a maximum depression of 20 mbar, the extraction rate is less than 40 volumes per hour, the test is continued until 80 volumes have been drawn through, or a period of 8 hours has elapsed. If it is impracticable to test the complete machine in the test chamber, one of the following procedures shall be applied. 1. Testing of individually enclosed sections of the machine (terminal boxes, slip-ring houses, etc.) 2. Testing of representative parts of the machine, comprising components such as doors, ventilating openings, joints, shaft seals, etc. with the vulnerable parts of the machine, such as terminals, slip-rings, etc., in position at the time of testing 3. Testing of smaller machine having the same full scale design details 4. Testing under conditions determined by agreement between manufacturer and user. In the second and third case, the volume of air to be drawn through the machine under test is as specified for the whole machine in full scale. The protection is satisfactory if, on inspection, talcum powder has not accumulated in a quantity or location such that, as with any kind of ordinary dust (e.g. not conductive, not combustible, not explosive or chemically corrosive dust) it could interfere with the correct operation of the machine. **b. Wire test** If the machine is intended to run with an open drain hole, this shall be tested in the same manner as the first characteristic numeral 4, i.e. using a 1 mm diameter wire.

Table 5-3 continued next page

Copyright National Electrical Manufacturers Association
Provided by IHS under license with NEMA
No reproduction or networking permitted without license from IHS
Not for Resale

Table 5-3 cont.
TEST AND ACCEPTANCE CONDITIONS FOR FIRST CHARACTERISTIC NUMERAL

First Characteristic Numeral	Test and Acceptance Conditions
6	**a. Dust test** The test is made using equipment incorporating the basic principles shown in Figure 5-2, in which talcum powder is maintained in suspension in a suitable closed test chamber. The talcum powder used shall be able to pass through a square-meshed sieve whose nominal wire diameter is 50 μm and the nominal width between wires is 75 μm. The amount of talcum powder to be used is 2 kg per cubic meter of the test chamber volume. It shall not have been used for more than 20 tests. Electrical machines have an enclosure where the normal operating cycle of the machine causes reductions in the air pressure within the enclosure in relation to the ambient atmospheric pressures. These reductions may be due, for example, to thermal cycling effects (category I). For this test the machine is supported inside the test chamber and the pressure inside the machine is maintained below atmospheric pressure by a vacuum pump. If the enclosure has a single drain hole, the suction connection shall be made to one hole specially provided for the purpose of the test, except if the drain hole is intended normally to be closed on site (see 5.04.4). The object of the test is to draw into the machine, if possible, at least 80 times the volume of air in the enclosure without exceeding an extraction rate of 60 volumes per hour with a suitable depression. In no event shall the depression exceed 20 mbar on the manometer shown in Figure 5-2. If an extraction rate of 40 to 60 volumes per hour is obtained, the test is stopped after 2 hours. If, with a maximum depression of 20 mbar, the extraction rate is less than 40 volumes per hour, the test is continued until 80 volumes have been drawn through, or a period of 8 hours has elapsed. If it is impracticable to test the complete machine in the test chamber, one of the following procedures shall be applied. 1. Testing of individually enclosed sections of the machine (terminal boxes, slip-ring houses, etc.) 2. Testing of representative parts of the machine, comprising components such as doors, ventilating openings, joints, shaft seals, etc. with the vulnerable parts of the machine, such as terminals, slip-rings, etc., in position at the time of testing 3. Testing of smaller machine having the same full scale design details 4. Testing under conditions determined by agreement between manufacturer and user. In the second and third case, the volume of air to be drawn through the machine under test is as specified for the whole machine in full scale. The protection is satisfactory if, on inspection, talcum powder has not entered the machine. **b. Wire test** If the machine is intended to run with an open drain hole, this shall be tested in the same manner as the first characteristic numeral 4, i.e. using a 1 mm diameter wire.

Copyright National Electrical Manufacturers Association
Provided by IHS under license with NEMA
No reproduction or networking permitted without license from IHS
Not for Resale

5.09 TESTS FOR SECOND CHARACTERISTIC NUMERAL

5.09.1 Test Conditions

Test conditions for second characteristic numeral are given in Table 5-4.

The test shall be conducted with fresh water.

During the test, the moisture contained inside the enclosure may be partly condensed. The dew which may thus be deposited should not be mistaken for an ingress of water.

For the purpose of the tests, the surface area of the machine shall be calculated with an accuracy of 10 percent.

Adequate safety precautions should be taken when testing a machine in the energized condition.

Table 5-4
TEST CONDITIONS FOR SECOND CHARACTERISTIC NUMERAL

Second Characteristic Numeral	Test Conditions
0	No test is required.
1	The test is made by means of an equipment the principle of which is shown in Figure 5-3, the rate of discharge shall be reasonably uniform over the whole area of the apparatus and shall produce a rainfall of between 3 mm and 5 mm of water per minute (in the case of equipment according to Figure 5-3, this corresponds to a fall in water level of 3 mm to 5 mm per minute). The machine under test is placed in its normal operating position under the dripping equipment, the base of which shall be larger than that of the machine under test. Except for machines designed for wall or ceiling mounting, the support for the enclosure under test should be smaller than the base of the enclosure. The machine normally fixed to a wall or ceiling is fixed in its normal position of use to a wooden board having dimensions that are equal to those of that surface of the machine that is in contact with the wall or ceiling when the machine is mounted as in normal use. The total duration of the test shall be 10 minutes.
2	The dripping equipment is the same as that specified for the second characteristic numeral 1 and is adjusted to give the same rate of discharge. The machine is tested for 2.5 minutes in each of four fixed positions of tilt. These positions are 15° either side of the vertical in two mutually perpendicular planes. The duration of the test shall be 10 minutes.
3	The test shall be made using equipment such as is shown in Figure 5-4, provided that the dimensions and shape of the machine to be tested are such that the radius of the oscillating tube does not exceed 1 m. Where this condition cannot be fulfilled, a hand-held spray device, as shown in Figure 5-5, shall be used. **a. Conditions when using test equipment as shown in Figure 5-4.** The total flow rate shall be adjusted in an average rate of 0.1 liter/min. 5 percent per hole multiplied by the number of holes. The total flow rate shall be measured with a flowmeter. The tube is provided with spray holes over an arc of 60° either side of the center point and shall be fixed in a vertical position; the test machine is mounted on a turntable with a vertical axis and is located at approximately the center point of the semicircle. The turntable is rotated at a convenient speed so that all parts of the machine are wetted during the test. The minimum test duration shall be 10 minutes. **b. Conditions when using test equipment as in Figure 5-5.** The moving shield shall be in place for this test. The water pressure is adjusted to give a delivery rate of 10 ±0.5 liters/min. (pressure approximately 80–100 kPa [0.8-1.0 bar]).

Table 5-4 continued next page

Copyright National Electrical Manufacturers Association
Provided by IHS under license with NEMA
No reproduction or networking permitted without license from IHS
Not for Resale

Table 5-4 cont
TEST CONDITIONS FOR SECOND CHARACTERISTIC NUMERAL

Second Characteristic Numeral	Test Conditions
	The test duration shall be 1 min per m^2 of calculated surface area of the machine (excluding any mounting surface) with a minimum duration of 5 minutes.
4	The conditions for deciding whether the apparatus of Figure 5-4 or that of Figure 5-5 should be used are the same as stated for the second characteristic numeral 3. **a. Using the equipment of Figure 5-4.** The oscillating tube has holes drilled over the whole 180° of the semicircle. The test duration, the rotation of the turntable and the water pressure are the same as for degree 3. The support for the machine under test shall be perforated so as to avoid acting as a baffle and the enclosure shall be sprayed from every direction by oscillating the tube at a rate of 60°/s to the limit of its travel in each direction. **b. Using the equipment of Figure 5-5.** The moving shield is removed from the spray nozzle and the machine is sprayed from all practicable directions. The rate of water delivery and the spraying time per unit area are the same as for degree 3.
5	The test is made by spraying the machine from all practicable directions with a stream of water from a standard test nozzle as shown in Figure 5-6. The conditions to be observed are as follows. 1. Nozzle internal diameter: 6.3 mm 2. Delivery rate: 12.5 liters/min. 5 percent 3. Water pressure at the nozzle: approximately 30 kPa (0.3 bar) (see Note 1) 4. Test duration per m^2 of surface area of machine: 1 minute 5. Minimum test duration: 3 minutes 6. Distance from nozzle to machine surface: approximately 3 m (see Note 2). (This distance may be reduced if necessary to ensure proper wetting when spraying upward.)
6	The test is made by spraying the machine from all practicable directions with a stream of water from a standard test nozzle as shown in Figure 5-6. The conditions to be observed are as follows. 1. Nozzle internal diameter: 12.5 mm 2. Delivery rate: 100 liters/min. 5 percent 3. Water pressure at the nozzle: approximately 100 kPa (1 bar) (see Note 1) 4. Test duration per m^2 of surface area of machine: 1 minute 5. Minimum test duration: 3 minutes 6. Distance from nozzle to machine surface: approximately 3 m (see Note 2).
7	The test is made by completely immersing the machine in water so that the following conditions are satisfied. 1. The surface of the water shall be at least 150 mm above the highest point of the machine 2. The lowest portion of the machine shall be at least 1 m below the surface of the water 3. The duration of the test shall be at least 30 minutes 4. The water temperature shall not differ from that of the machine by more than 5°C. By agreement between manufacturer and user, this test may be replaced by the following procedure. The machine should be tested with an inside air pressure of about 0.1 bar. The duration of the test is 1 minute. The test is deemed satisfactory if no air leaks out during the test. Air leakage may be detected either by submersion, the water just covering the machine, or by the application on to it of a solution of soap in water.

Table 5-4 continued next page

Copyright National Electrical Manufacturers Association
Provided by IHS under license with NEMA
No reproduction or networking permitted without license from IHS
Not for Resale

Table 5-4 cont
TEST CONDITIONS FOR SECOND CHARACTERISTIC NUMERAL

Second Characteristic Numeral	Test Conditions
8	The test conditions are subject to agreement between manufacturer and user, but they shall not be less severe than those prescribed for degree 7. NOTES 1. The measurement of the water pressure may be replaced by that of the height to which the spray of the nozzle freely rises: Pressure Height 0.3 bar 2.5 m 1 bar 8 m 2. The distance of the nozzle to the machine under test, for degrees 5 and 6, was set to 3 m for practical reasons; it may be reduced in order to test the machine from every direction.

5.09.2 Acceptance Conditions

After the test in accordance with Table 5-4 has been carried out, the machine shall be inspected for ingress of water and subjected to the following verifications and tests.

5.09.2.1 The amount of water which has entered the machine shall not be capable of interfering with its satisfactory operation; the windings and live parts not designed to operate when wet shall not be wet and no accumulation of water which could reach them shall occur inside the machine.

It is, however, permissible for the blades of fans inside rotating machines to be wet; also leakage along the shaft is allowable if provision is made for drainage of this water.

5.09.2.2

a. In the case of a test on a machine not running, the machine shall be operated under no-load conditions, under rated voltage for 15 minutes, then submitted to a high-voltage test, the test voltage being 50 percent of the test voltage for a new machine (but not less than 125 percent of the rated voltage).
b. In the case of a test on a running machine, only the high-voltage test is made, in accordance with Item a. of 5.09.2.2.
c. The test is deemed satisfactory if these checks show no damage according to the IEC Publication 34-1.

5.10 REQUIREMENTS AND TESTS FOR OPEN WATER-PROTECTED MACHINES

The degree of protection W is intended for internally air cooled machines with open circuit cooling.

Weather-protected machines shall be so designed that the ingress of rain, snow, and airborne particles into the electrical parts is reduced.

Other measures providing weather protection (such as encapsulated windings or total enclosure) are not designated by W.

Degree of protection W machines shall have ventilation passages constructed such that:

a. At both intake and discharge, high-velocity air and airborne particles are prevented from entering the internal passages leading directly to the electrical parts of the machine.
b. The intake air path, by baffling or use of separate housings, provide at least three abrupt changes in direction of the intake air, each of which is at least 90°.
c. The intake air path shall provide an area of low velocity not exceeding 3 m/s. enabling any particles to settle. Removable or otherwise easy to clean filters or any other arrangement for separation of particles may be provided instead of a settling chamber.

The protection of the machine against contact, foreign objects and water shall comply with the conditions and tests specified for the stated degree of protection.

The terminal box design shall comply to at least IP54 degree of enclosure.

If necessary, arrangements to provide protection against icing, moisture, corrosion or other abnormal conditions shall be made by agreement (e.g. by using anti-condensation heating).

For verification of weather-protection W a study of drawings is generally sufficient.

Copyright National Electrical Manufacturers Association
Provided by IHS under license with NEMA
No reproduction or networking permitted without license from IHS
Not for Resale

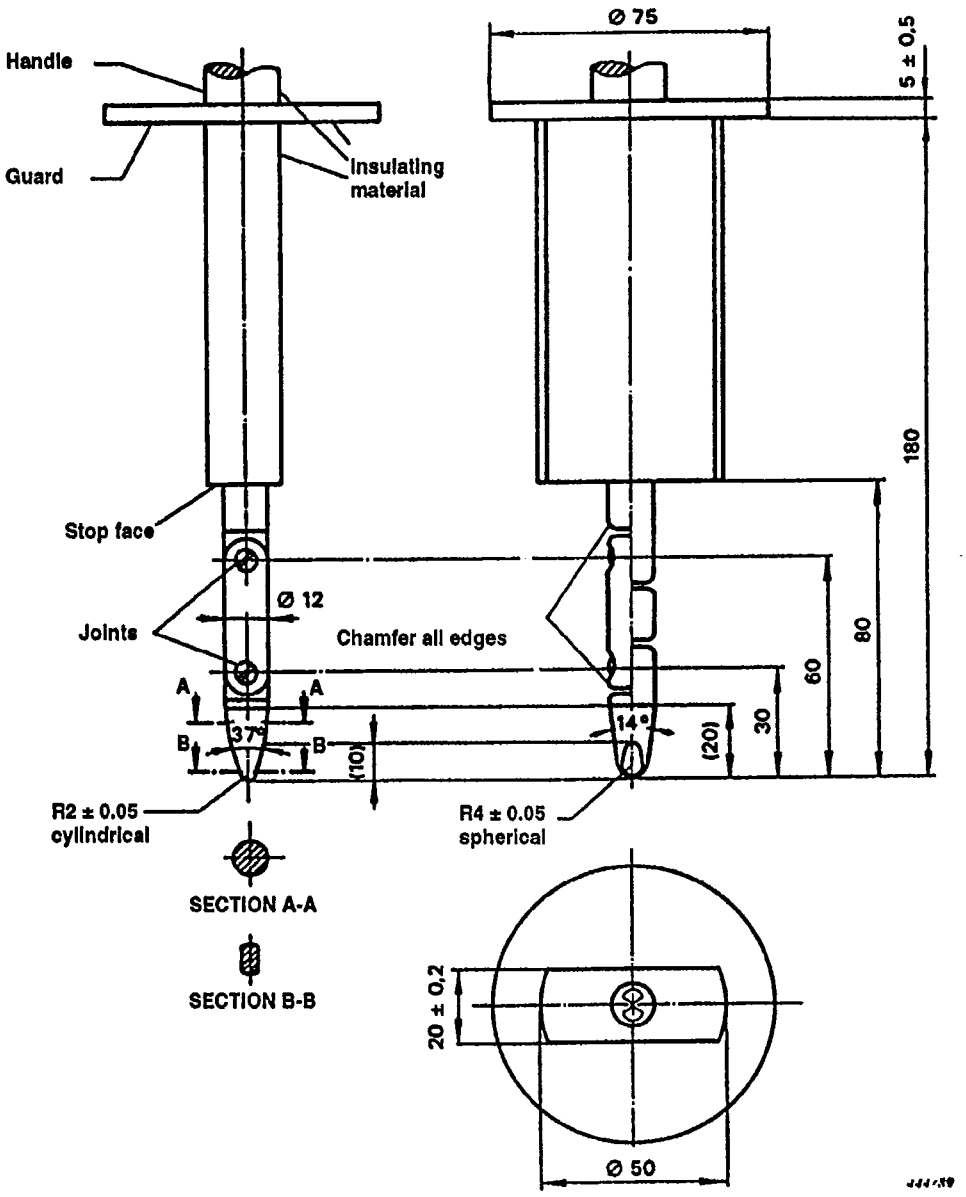

Both joints of this finger may bend through an angle of 90°, but in one and the same direction only.
Dimensions in millimeters
Tolerances:
On angles: ±5°
On linear dimensions: Less than 25mm: ±0.05
More than 25mm: ±0.2
(Reproduced with permission of IEC which reatins the copyright)

Figure 5-1
STANDARD TEST FINGER

Copyright National Electrical Manufacturers Association
Provided by IHS under license with NEMA
No reproduction or networking permitted without license from IHS
Not for Resale

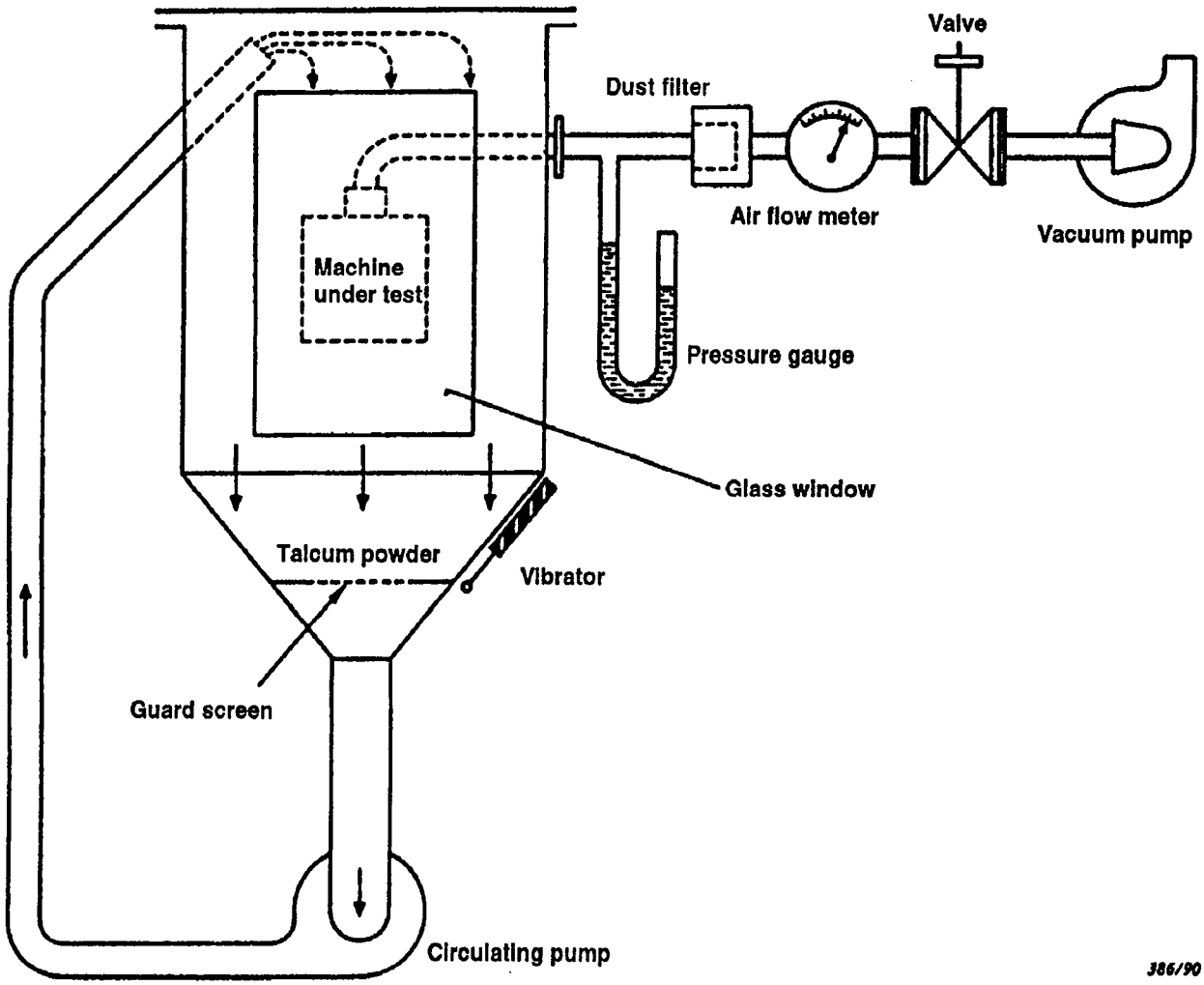

Figure 5-2
EQUIPMENT TO PROVE PROTECTION AGAINST DUST

(Reproduced with permission of IEC which retains the copyright)

Copyright National Electrical Manufacturers Association
Provided by IHS under license with NEMA
No reproduction or networking permitted without license from IHS

Not for Resale

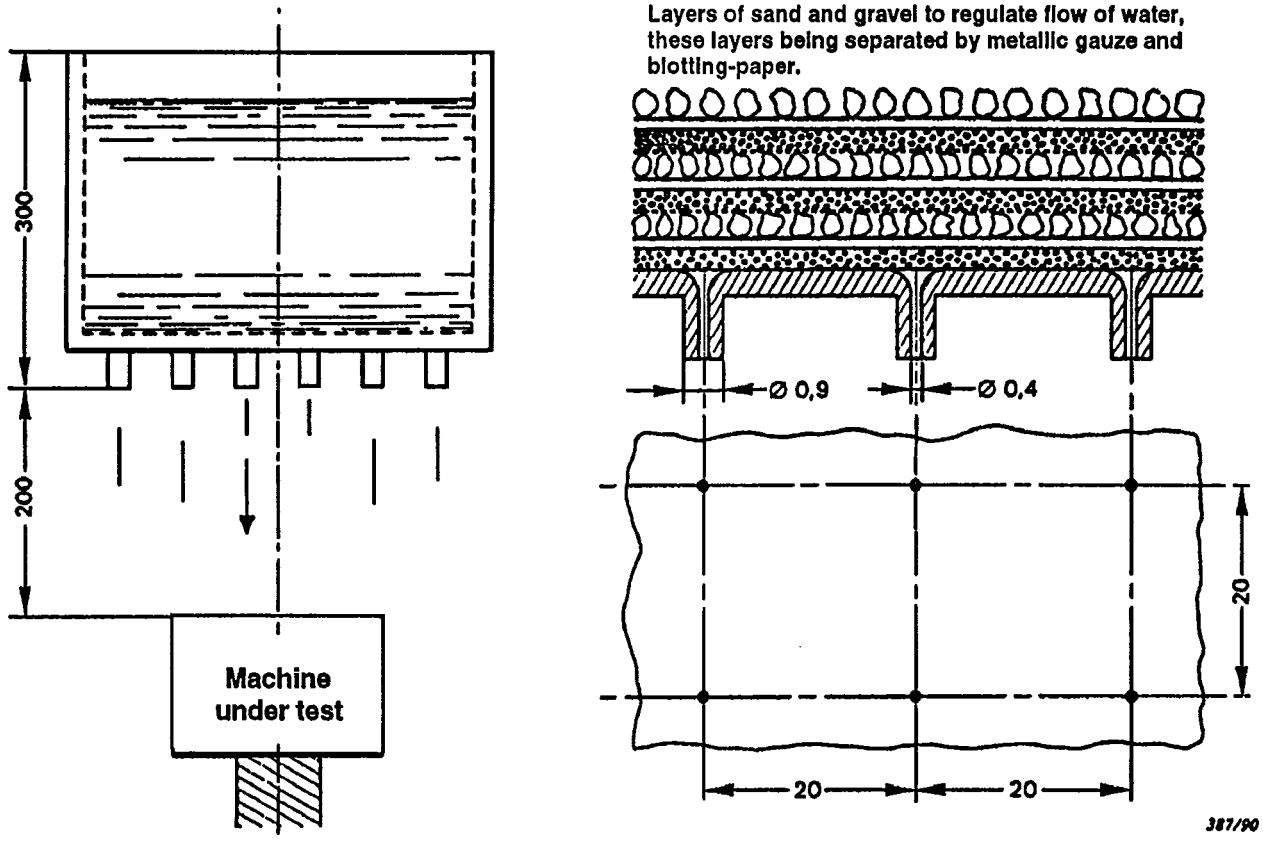

Dimensions in millimeters
NOTE: The support must be smaller than the machine under test.
(Reproduced with permission of IEC which retains the copyright)

Figure 5-3
EQUIPMENT TO PROVE PROTECTION AGAINST DROPS OF WATER

Copyright National Electrical Manufacturers Association
Provided by IHS under license with NEMA
No reproduction or networking permitted without license from IHS
Not for Resale

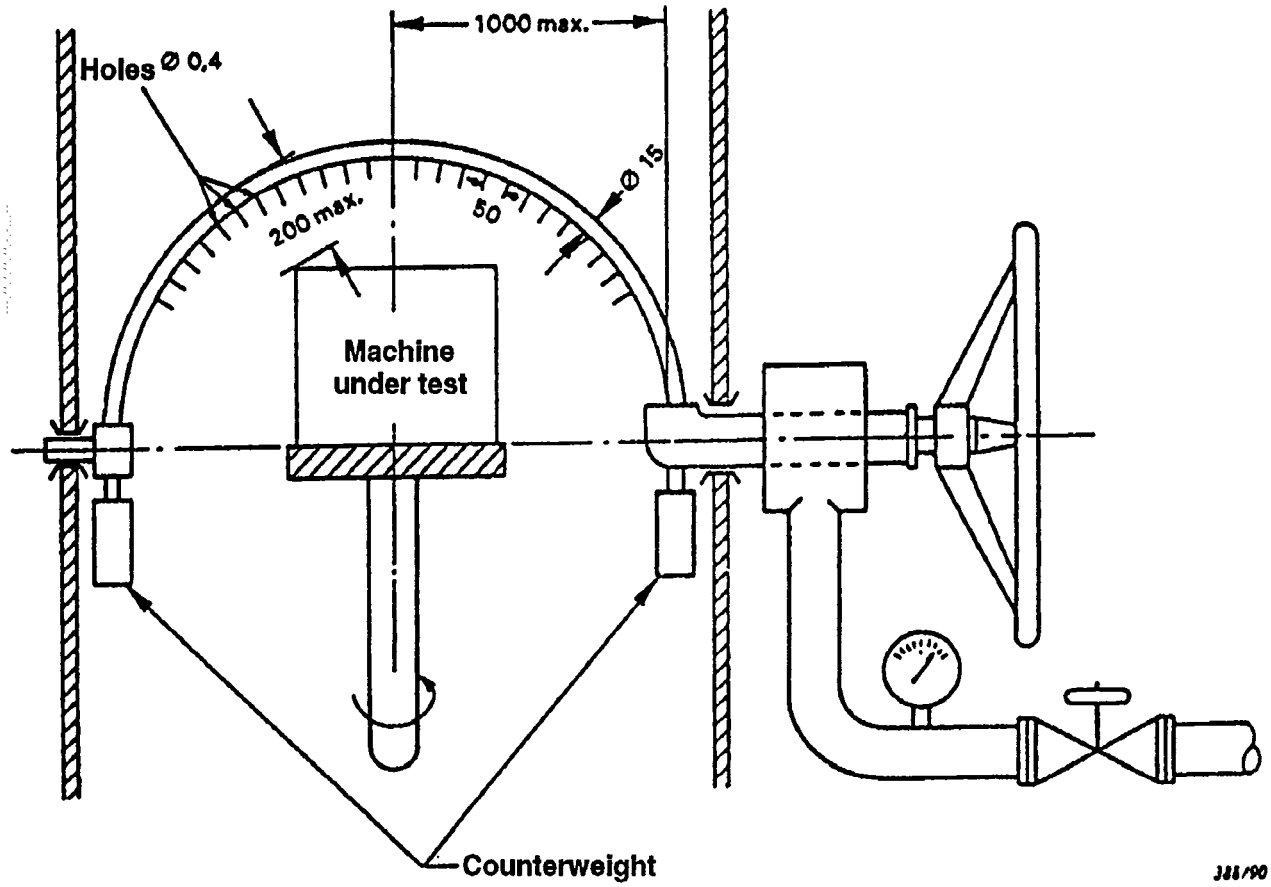

Dimensions in millimeters
(Reproduced with permission of IEC which retains the copyright)

Figure 5-4
EQUIPMENT TO PROVE PROTECTION AGAINST SPRAYING AND SPLASHING WATER SHOWN WITH SPRAYING HOLES IN CASE OF SECOND CHARACTERISTIC NUMERAL 3

Copyright National Electrical Manufacturers Association
Provided by IHS under license with NEMA
No reproduction or networking permitted without license from IHS
Not for Resale

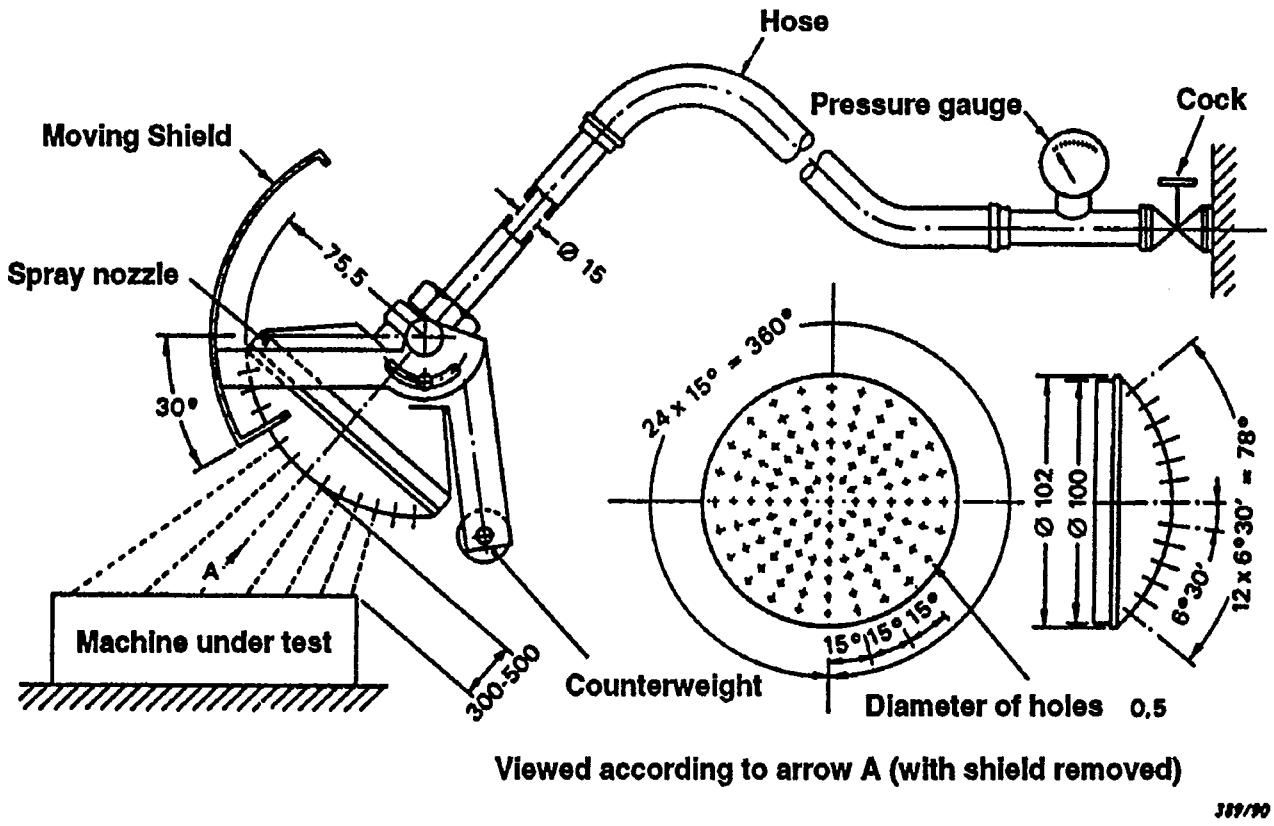

Dimensions in millimeters
121 holes of Ø 0.5:
1 hole at the center
2 inner circles 12 holes at 30° pitch
4 outer circles of 24 holes at 15° pitch
Moving shield—Aluminum
Spray nozzle—Brass
(Reproduced with permission of IEC which retains the copyright)

Figure 5-5
HAND-HELD EQUIPMENT TO PROVE PROTECTION AGAINST SPRAYING AND SPLASHING WATER

Copyright National Electrical Manufacturers Association
Provided by IHS under license with NEMA
No reproduction or networking permitted without license from IHS
Not for Resale

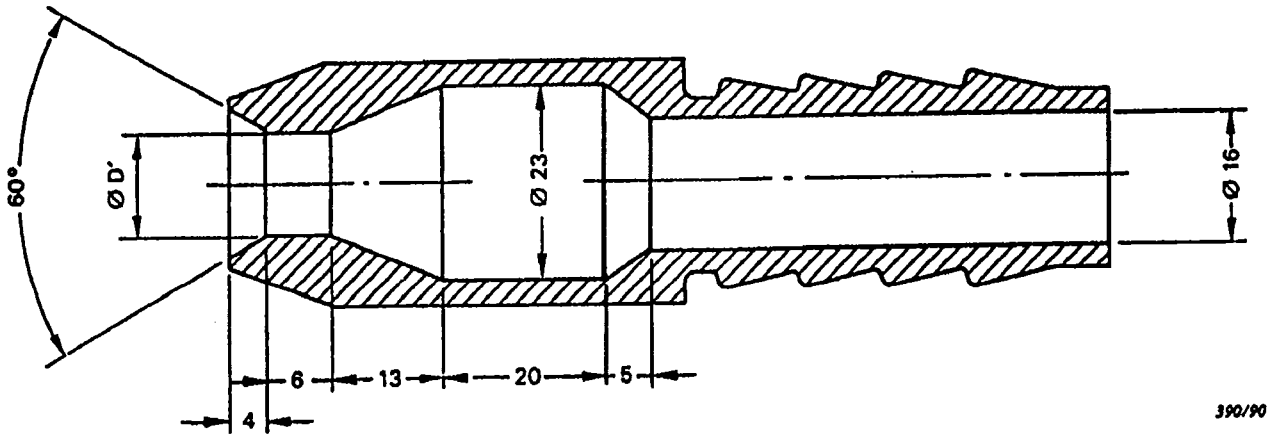

Dimensions in millimeters
D' = 6.3 mm for the test of Table 5-4, numeral 5
D' = 12.5 mm for the test of Table 5-4, numeral 6
(Reproduced with permission of IEC which retains the copyright)

Figure 5-6
STANDARD NOZZLE FOR HOSE TESTS

Copyright National Electrical Manufacturers Association
Provided by IHS under license with NEMA
No reproduction or networking permitted without license from IHS

Not for Resale

APPENDIX A

MOST FREQUENTLY USED DEGREES OF PROTECTION FOR ELECTRICAL MACHINES

First Characteristic Numeral \ Second Characteristic Numeral	0	1	2	3	4	5	6	7	8
0									
1			IP12						
2		IP21	IP22	IP23					
3									
4					IP44				
5					IP54	IP55			

Note: The above list comprises the most frequently used degrees of protection, on the international level, in accordance with the description given in 5.04 and 5.05. It may be altered or completed for special needs, or according to the necessities of national standards.

Copyright National Electrical Manufacturers Association
Provided by IHS under license with NEMA
No reproduction or networking permitted without license from IHS

Not for Resale

Section I
GENERAL STANDARDS APPLYING TO ALL MACHINES
Part 6
METHODS OF COOLING (IC CODE)

6.1 SCOPE

This part identifies the circuit arrangements and the methods of movement of the coolant in rotating electrical machines, classifies the methods of cooling and gives a designation system for them.

The designation of the method of cooling consists of the letters "IC", followed by numerals and letters representing the circuit arrangement, the coolant and the method of movement of the coolant.

A complete designation and a simplified designation are defined. The complete designation system is intended for use mainly when the simplified system is not applicable.

The complete designations, as well as the simplified designations, are illustrated in the tables of 6.7 for some of the most frequently used types of rotating machines, together with sketches of particular examples.

6.2 DEFINITIONS

For the purposes of this Part, the following definitions apply.

6.2.1 Cooling

A procedure by means of which heat resulting from losses occurring in a machine is given up to a primary coolant which may be continuously replaced or may itself be cooled by a secondary coolant in a heat exchanger.

6.2.2 Coolant

A medium, liquid or gas, by means of which heat is transferred.

6.2.3 Primary Coolant

A medium, liquid or gas which, being at a lower temperature than a part of a machine and in contact with it, removes heat from that part.

NOTE—A machine may have more than one primary coolant.

6.2.4 Secondary Coolant

A medium, liquid or gas which, being at a lower temperature than the primary coolant, removes the heat given up by this primary coolant by means of a heat exchanger or through the external surface of the machine.

NOTE—Each primary coolant in a machine may have its own secondary coolant.

6.2.5 Final Coolant

The last coolant to which the heat is transferred.

NOTE—In some machines the final coolant is also the primary coolant.

6.2.6 Surrounding Medium

The medium, liquid or gas, in the environment surrounding the machine.

NOTE—The coolant may be drawn from and/or be discharged to this environment.

6.2.7 Remote Medium

A medium, liquid or gas, in an environment remote from the machine and from which a coolant is drawn and/or to which it is discharged through inlet and/or outlet pipe or duct, or in which a separate heat exchanger may be installed.

6.2.8 Direct Cooled Winding (Inner Cooled Winding)

A winding in which the coolant flows through hollow conductors, tubes or channels which form an integral part of the winding inside the main insulation.

6.2.9 Indirect Cooled Winding

A winding cooled by any method other than that of 6.2.8.

NOTE—In all cases when "indirect" or "direct" is not stated, an indirect cooled winding is implied.

6.2.10 Heat Exchanger

A component intended to transfer heat from one coolant to another while keeping the two coolants separate.

6.2.11 Pipe, Duct

A passage provided to guide the coolant.

NOTE—The term duct is generally used when a channel passes directly through the floor on which the machine is mounted. The term pipe is used in all other cases where a coolant is guided outside the machine or heat exchanger.

6.2.12 Open Circuit

A circuit in which the final coolant is drawn directly from the surrounding medium or is drawn from a remote medium, passes over or through the machine or through a heat exchanger, and then returns directly to the surrounding medium or is discharged to a remote medium.

NOTE—The final coolant will always flow in an open circuit (see also 6.2.13).

6.2.13 Closed Circuit

A circuit in which a coolant is circulated in a closed loop in or through the machine and possibly through a heat exchanger, while heat is transferred from this coolant to the next coolant through the surface of the machine or in the heat exchanger.

Copyright National Electrical Manufacturers Association
Provided by IHS under license with NEMA
No reproduction or networking permitted without license from IHS

Not for Resale

NOTES

1—A general cooling system of a machine may consist of one or more successively acting closed circuits and always a final open circuit. Each of the primary, secondary and/or final coolants may have its own appropriate circuit.

2—The different kinds of circuits are stated in 6.4 and in the tables of 6.7.

6.2.14 Piped or Ducted Circuit

A circuit in which the coolant is guided either by inlet or outlet pipe or duct, or by both inlet and outlet pipe or duct, these serving as separators between the coolant and the surrounding medium.

NOTE—The circuit may be an open or a closed circuit (see 6.2.12 and 6.2.13).

6.2.15 Stand-By or Emergency Cooling System

A cooling system which is provided in addition to the normal cooling system and which is intended to be used when the normal cooling system is not available.

6.2.16 Integral Component

A component in the coolant circuit which is built into the machine and which can only be replaced by partially dismantling the machine.

6.2.17 Machine-Mounted Component

A component in the coolant circuit which is mounted on the machine and forms part of it but which can be replaced without disturbing the main machine.

6.2.18 Separate Component

A component in the coolant circuit which is associated with a machine but which is not mounted on or integral with the machine.

NOTE—This component may be located in the surrounding or a remote medium.

6.2.19 Dependent Circulation Component

A component in the coolant circuit which for its operation is dependent on (linked with) the rotational speed of the rotor of the main machine, e.g. fan or pump on the shaft of the main machine or fan unit or pump unit driven by the main machine.

6.2.20 Independent Circulation Component

A component in the coolant circuit which for its operation is independent of (not linked with) the rotational speed of the rotor of the main machine, e.g. design with its own drive motor.

6.3 DESIGNATION SYSTEM

The designation used for the method of cooling of a machine consists of letters and numerals as stated below:

6.3.1 Arrangement of the IC Code

The designation system is made up as follows, using the examples IC8A1W7 for complete designation and IC81W for simplified designation.

NOTE—The following rule may be applied to distinguish between complete and simplified designations.

a. complete designation can be recognized by the presence (after the letters IC) of three or five numerals and letters in the regular sequence—numeral, letter, numeral (letter, numeral).
Examples: IC3A1, IC4A1A1 or IC9A1W.

b. a simplified designation has two or three consecutive numerals, or a letter in the final position. Examples: IC31, IC411 or IC71W.

Complete designation	IC	8	A	1	W	7
Simplified designation	IC	8		1	W	

6.3.1.1 CODE LETTERS
(International Cooling)

6.3.1.2 CIRCUIT ARRANGEMENT
Designated by a characteristic numeral in accordance with 6.4

6.3.1.3 PRIMARY COOLANT
Designated by a characteristic letter in accordance with 6.5.
Omitted for simplified designation if it is A for air

6.3.1.4 METHOD OF MOVEMENT OF PRIMARY COOLANT
(higher temperature)
Designated by a characteristic numeral in accordance with 6.6

6.3.1.5 SECONDARY COOLANT
If applicable, designated by a characteristic letter in accordance with 6.5.
Omitted for simplified designation if it is A for air.

6.3.1.6 METHOD OF MOVEMENT OF SECONDARY COOLANT
(lower temperature)

NOTE—If applicable, designated by a characteristic numeral in accordance with 6.6. Omitted in case of the simplified designation if it is 7 with water (W) for secondary coolant.

Copyright National Electrical Manufacturers Association
Provided by IHS under license with NEMA
No reproduction or networking permitted without license from IHS
Not for Resale

6.3.2 Application of Designations

The simplified designation should preferably be used, i.e., the complete designation system is intended for use mainly when the simplified system is not applicable.

6.3.3 Designation of Same Circuit Arrangements for Different Parts of a Machine

Different coolants or methods of movement may be used in different parts of a machine. These shall be designated by stating the designations as appropriate after each part of the machine.

Example for different circuits in rotor and stator:

Rotor IC7H1W
Stator IC7W5W ..... (simplified)

Rotor IC7H1W7
Stator IC7W5W7 ..... (complete)

Example for different circuits in a machine:

Generator IC7H1W
Exciter IC75W ..... (simplified)

Generator IC7H1W7
Exciter IC7A5W7 ..... (complete)

6.3.4 Designation of Different Circuit Arrangements for Different Parts of a Machine

Different circuit arrangements may be used on different parts of a machine. These shall be designated by stating the designations as appropriate after each part of the machine, separated by a stroke (/).

Example:

Generator IC81W
Exciter IC75W ..... (simplified)

Generator IC8A1W7
Exciter IC7A5W7 ..... (complete)

6.3.5 Designation of Direct Cooled Winding

In the case of machines with direct cooled (inner cooled) windings, the part of the designation related to this circuit shall be put between brackets.

Example:

Rotor IC7H1W
Stator IC7(W5)W ..... (simplified)

Rotor IC7H1W7
Stator IC7(W5)W7 ..... (complete)

6.3.6 Designation of Stand-By or Emergency Cooling Conditions

Different circuit arrangements may be used depending on stand-by or emergency cooling conditions. These shall be designated by the designation for the normal method of cooling, followed by the designation of the special cooling system enclosed in brackets, including the words "Emergency" or "Stand-by" and the code letters IC.

Example:

IC71W (Emergency IC01) ..... (simplified)
IC7A1W7 (Emergency IC0A1 ..... (complete)

6.3.7 Combined Designations

When two or more of the conditions of 6.3.3 to 6.3.6, inclusive, are combined, the appropriate designations described above can be applied together.

6.3.8 Replacement of Characteristic Numerals

When a characteristic numeral has not yet been determined or is not required to be specified for certain application, the omitted numeral shall be replaced by the letter "X."

Examples: IC3X, IC4XX

6.3.9 Examples of Designations and Sketches

In 6.7, the different designations, together with appropriate sketches, are given for some of the most commonly used types of rotating machines.

6.4 CHARACTERISTIC NUMERAL FOR CIRCUIT ARRANGEMENT

The characteristic numeral following the basic symbol "IC" designates the circuit arrangement (see 6.3.1.2) for circulating the coolant(s) and for removing heat from the machine in accordance with Table 6-1.

Copyright National Electrical Manufacturers Association
Provided by IHS under license with NEMA
No reproduction or networking permitted without license from IHS

Not for Resale

Table 6-1
CIRCUIT ARRANGEMENT

Characteristic numeral	Brief description	Definition
0 *	Free circulation	The coolant is freely drawn directly from the surrounding medium, cools the machine, and then freely returns directly to the surrounding medium (open circuit)
1 *	Inlet pipe or inlet duct circulated	The coolant is drawn from a medium remote from the machine, is guided to the machine through an inlet pipe or duct, passes through the machine and returns directly to the surrounding medium (open circuit).
2 *	Outlet pipe or outlet duct circulated	The coolant is drawn directly from the surrounding medium, passes through the machine and is then discharged from the machine through an outlet pipe or duct to a medium remote from the machine (open circuit).
3 *	Inlet and outlet pipe or duct circulated	The coolant is drawn from a medium remote from the machine, is guided to the machine through an inlet pipe or duct, passes through the machine and is then discharged from the machine through an outlet pipe or duct to a medium remote from the machine (open circuit).
4	Frame surface cooled	The primary coolant is circulated in a closed circuit in the machine and gives its heat through the external surface of the machine (in addition to the heat transfer via the stator core and other heat conducting parts) to the final coolant which is the surrounding medium. The surface may be plain or ribbed, with or without an outer shell to improve the heat transfer.
5 **	Integral heat exchanger (using surrounding medium)	The primary coolant is circulated in a closed circuit and gives its heat via a heat exchanger, which is built into and forms an integral part of the machine, to the final coolant which is the surrounding medium.
6 **	Machine-mounted heat exchanger (using surrounding medium)	The primary coolant is circulated in a closed circuit and gives its heat via a heat exchanger, which is mounted directly on the machine, to the final coolant which is the surrounding medium.
7 **	Integral heat exchanger (using remote medium)	The primary coolant is circulated in a closed circuit and gives its heat via a heat exchanger, which is built into and forms an integral part of the machine, to the secondary coolant which is the remote medium.
8 **	Machine-mounted heat exchanger (using remote medium)	The primary coolant is circulated in a closed circuit and gives its heat via a heat exchanger, which is mounted directly on the machine, to the secondary coolant which is the remote medium.
9 **,†	Separate heat exchanger (using surrounding or remote medium)	The primary coolant is circulated in a closed circuit and gives its heat via a heat exchanger, which is separate from the machine, to the secondary coolant which is either the surrounding or the remote medium.

* Filters or labyrinths for separating dust, suppressing noise, etc., may be mounted in the frame or ducts. Characteristic numerals 0 to 3 also apply to machines where the cooing medium is drawn from the surrounding medium through a heat exchanger in order to provide cooler medium than the surrounding medium, or blown out through a heat exchanger to keep the ambient temperature lower.

** The nature of the heat exchanger is not specified (ribbed or plain tubes, etc.).

† A separate heat exchanger may be installed beside the machine or in a location remote from the machine. A gaseous secondary coolant may be the surrounding medium or a remote medium (see also 6.7, Table 6-3).

Copyright National Electrical Manufacturers Association
Provided by IHS under license with NEMA
No reproduction or networking permitted without license from IHS

Not for Resale

6.5 CHARACTERISTIC LETTER FOR COOLANT

6.5.1 The coolant (see 6.3.1.3 and 6.3.1.5) is designated by one of the characteristic letters in accordance with Table 6-2.

6.5.2 When the single coolant is air or when in case of two coolants either one or both are air, these letter(s) "A" stating the coolant are omitted in the simplified designation.

6.5.3 For the characteristic letter "S," the coolant shall be identified elsewhere.

6.5.4 When the coolant is finally selected, the temporarily used letter "Y" shall be replaced by the appropriate final characteristic letter.

Table 6-2
COOLANT

Characteristic letter	Coolant
A (see 6.5.2)	Air
F	Refrigerant
H	Hydrogen
N	Nitrogen
C	Carbon dioxide
W	Water
U	Oil
S (See 5.3)	Any other coolant
Y (see 6.5.4)	Coolant not yet selected

6.6 CHARACTERISTIC NUMERAL FOR METHOD OF MOVEMENT

The characteristic numeral following (in the complete designation) each of the letters stating the coolant designates the method of movement of this appropriate coolant (see 6.3.1.4 and 6.3.1.6) in accordance with Table 6-3.

Table 6-3
METHOD OF MOVEMENT

Characteristic numeral	Brief description	Definition
0	Free convection	The coolant is moved by temperature differences. The fanning action of the rotor is negligible.
1	Self-circulation	The coolant is moved dependent on the rotational speed of the main machine, either by the action of the rotor alone or by means of a component designed for this purpose and mounted directly on the rotor of the main machine, or by a fan or pump unit mechanically driven by the rotor or the main machine.
2–4		Reserved for future use.
5 *	Integral independent component	The coolant is moved by an integral component, the power of which is obtained in such a way that it is independent of the rotational speed of the main machine, e.g. an internal fan or pump unit driven by its own electric motor.
6 *	Machine-mounted independent component	The coolant is moved by a component mounted on the machine, the power of which is obtained in such a way that it is independent of the rotational speed of the main machine, e.g. a machine-mounted fan unit or pump unit driven by its own electric motor.
7 *	Separate and independent component or coolant system pressure	The coolant is moved by a separate electrical or mechanical component not mounted on the machine and independent of it or is produced by the pressure in the coolant circulating system, e.g. supplied from a water distribution system, or a gas main under pressure.
8 *	Relative displacement	The movement of the coolant results from relative movement between the machine and the coolant, either by moving the machine through the coolant or by flow of the surrounding coolant (air or liquid).
9	All other components	The movement of the coolant is produced by a method other than defined above and shall be fully described.

* The use of an independent component as a principal source for movement does not exclude the fanning action of the rotor or the existence of a supplementary fan mounted directly on the rotor of the main machine.

Copyright National Electrical Manufacturers Association
Provided by IHS under license with NEMA
No reproduction or networking permitted without license from IHS

Not for Resale

6.7 COMMONLY USED DESIGNATIONS

Following are simplified and complete designations for some of the most commonly used types of rotating electrical machines.

6.7.1 General Information on the Tables

In Tables 6-4, 6-5 and 6-6 the columns show the characteristic numerals for circuit arrangements and the rows show the characteristic numerals for the method of movement of the coolant.

Circuit arrangement	Table
Characteristic numerals 0, 1, 2, 3 (open circuits using surrounding medium or remote medium)	6-4
Characteristic numerals 4, 5, 6 (primary circuit closed, secondary circuit open, using surrounding medium)	6-5
Characteristic numerals 7, 8, 9 (primary circuit closed, secondary circuit open and using remote or surrounding medium)	6-6

The sketches show examples with cooling air flowing from non-drive end to drive-end. The air flow may be in the opposite direction, or the air inlet may be at both ends with discharge at the center, depending on the design of the machine, the arrangement and number of fans, fan units, inlet and outlet pipes or ducts.

The top line of each box gives the simplified designation on the left and the complete designation on the right with air and/or water as coolant (see 6.3.2 and 6.5.1).

Symbols used in sketches:


Integral or machine-mounted dependent fan


Independent circulation component


Duct or pipe, not part of the machine

Copyright National Electrical Manufacturers Association
Provided by IHS under license with NEMA
No reproduction or networking permitted without license from IHS

Not for Resale

Table 6-4
EXAMPLES OF OPEN CIRCUIT USING SURROUNDING OR REMOTE MEDIUM*

Characteristic numeral for circuit arrangement (See clause 4)				Characteristic numeral for method of movement of coolant (See clause 6)
0 Free circulation (Using surrounding medium)	**1** Inlet pipe or inlet duct circulated (Using remote medium)	**2** Outlet pipe or outlet duct circulated (Using surrounding medium)	**3** Inlet and outlet pipe or duct circulated (Using remote medium)	
IC00 IC0A0 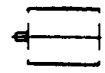				**0** Free convection
IC01 IC0A1 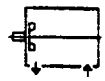	IC11 IC1A1 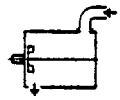	IC21 IC2A1 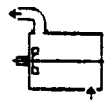	IC31 IC3A1 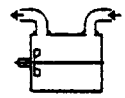	**1** Self-circulation
IC05 IC0A5 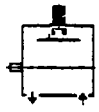	IC15 IC1A5 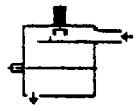	IC25 IC2A5 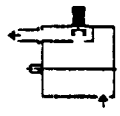	IC35 IC3A5 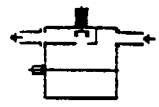	**5** Circulation by integral independent component
IC06 IC0A6 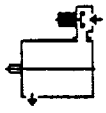	IC16 IC1A6 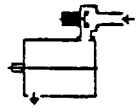	IC26 IC2A6 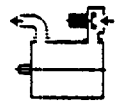	IC36 IC3A6 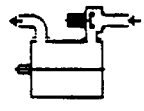	**6** Circulation by machine-mounted independent component
	IC17 IC1A7 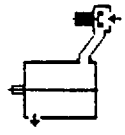	IC27 IC2A7 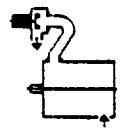	IC37 IC3A7 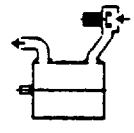	**7** Circulation by separate and independent component or by coolant pressure system
IC08 IC0A8 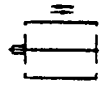			IC38 IC3A8 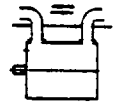	**8** Circulation by relative displacement

*For arrangement of the IC Code, see 3.1.

Copyright National Electrical Manufacturers Association
Provided by IHS under license with NEMA
No reproduction or networking permitted without license from IHS

Not for Resale

Table 6-5
EXAMPLES OF PRIMARY CIRCUITS CLOSED, SECONDARY CIRCUITS OPEN USING SURROUNDING MEDIUM*

Characteristic numeral for circuit arrangement (See clause 4)			Characteristic numeral for method of movement (See clause 6)	
4 Frame surface cooled (Using surrounding medium)	**5** Integral heat exchanger (Using surrounding medium	**6** Machine-Mounted heat exchanger (Using surrounding medium)	of primary coolant (See note)	of secondary coolant
IC410 IC4A1A0 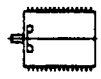	IC510 IC5A1A0 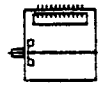	IC610 IC6A1A0 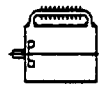		**0** Free convection
IC411 IC4A1A1 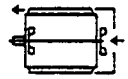	IC511 IC5A1A1 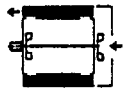	IC611 IC6A1A1 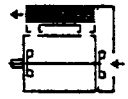		**1** Self-circulation
				5 Circulation by integral independent component
IC416 IC4A1A6 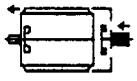	IC516 IC5A1A6 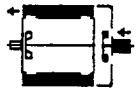	IC616 IC6A1A6 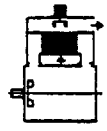		**6** Circulation by machine-mounted independent component
				7 Circulation by separate and independent component or by coolant pressure system
IC418 IC4A1A8 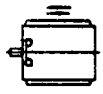	IC518 IC5A1A8 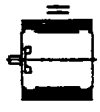	IC618 IC6A1A8 		**8** Circulation by relative displacement

*For arrangement of the IC Code, see 3.1.

NOTE-The shown examples in this table are related to the movement of the secondary coolant. The characteristic numeral for the movement of the primary coolant in this table is assumed to be "1," Obviously other designs not shown can also be specified by means of the IC Code, e.g., design with machine-mounted independent fan unit for primary coolant: IC666 (IC6A6A6) instead of IC616 (IC6A1A6).

Copyright National Electrical Manufacturers Association
Provided by IHS under license with NEMA
No reproduction or networking permitted without license from IHS

Not for Resale

Table 6-6
EXAMPLES OF PRIMARY CIRCUITS CLOSED, SECONDARY CIRCUITS OPEN USING REMOTE OR SURROUNDING MEDIUM*

Characteristic numeral for circuit arrangement (See clause 4)				Characteristic numeral for method of movement (See clause 6)	
7 Integral heat exchanger (Using remote medium)	8 Machine-mounted heat exchanger (Using remote exchange)	9 Separate heat exchanger (Secondary coolant: liquid remote medium)	9 Separate heat exchanger (Secondary coolant: gas, remote medium or surrounding medium)	of primary coolant	of secondary coolant (See note)
IC70W IC7A0W7 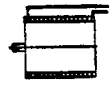				0 Free convection	
IC71W IC7A1W7 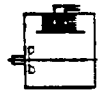	IC81W IC8A1W7 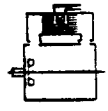	IC91W IC9A1W7 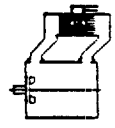	IC917 IC9A1A7 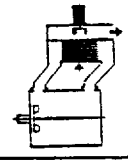	1 Self-circulation	
IC75W IC7A5W7 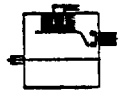	IC85W IC8A5W7 	IC95W IC9A5W7 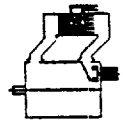	IC957 IC9A5A7 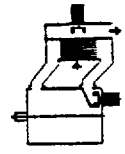	5 Circulation by integral independent component	
IC76W IC7A6W7 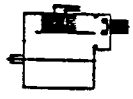	IC86W IC8A6W7 	IC96W IC9A6W7 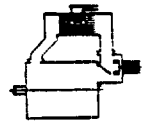	IC967 IC9A6A7 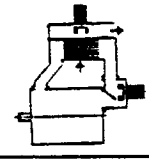	6 Circulation by machine-mounted independent component	
		IC97W IC9A7W7 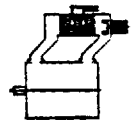	IC977 IC9A7A7 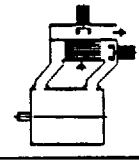	7 Circulation by separate and independent component or by coolant pressure system	
				8 Circulation by relative displacement	

*For arrangement of the IC Code, see 3.1.

NOTE-The shown examples in this table are related to the movement of the primary coolant. The characteristic numeral for the movement of the secondary coolant is assumed to be "7." Obviously other designs not shown can also be specified by means of the IC Codes, e.g., design with machine-mounted independent pump unit for secondary coolant: IC71W6 (IC7A1W6) instead of IC71W (IC7A1W7).

Copyright National Electrical Manufacturers Association
Provided by IHS under license with NEMA
No reproduction or networking permitted without license from IHS

Not for Resale

Copyright National Electrical Manufacturers Association
Provided by IHS under license with NEMA
No reproduction or networking permitted without license from IHS

Not for Resale

Section 1
GENERAL STANDARDS APPLYING TO ALL MACHINES
Part 7
MECHANICAL VIBRATION—MEASUREMENT, EVALUATION AND LIMITS

7.01 SCOPE

This standard is applicable to direct current machines tested with direct current power and to polyphase alternating current machines tested with sinusoidal power, in frame sizes 42 and larger and at rated power up to 100,000 HP or 75 MW, at nominal speeds up to and including 3600 rev/min.

For vertical and flange-mounting machines, this standard is only applicable to those machines that are tested in the intended orientation.

This standard is not applicable to machines mounted in situ, single-phase machines, three-phase machines operated on single-phase systems, vertical water power generators, permanent magnet generators or to machines coupled to prime movers or driven loads.

NOTE—For machines measured in situ refer to ISO 3945, ISO 2372, and ISO 10816-3.

7.02 OBJECT

This standard establishes the test and measurement conditions of, and fixes the limits for, the level of vibration of an electrical machine, when measurements are made on the machine alone in a test area under properly controlled conditions. Measurement quantities are the vibration levels (velocity, displacement and/or acceleration) at the machine bearing housings and the shaft vibration relative to the bearing housings within or near the machine bearings. Shaft vibration measurements are recommended only for machines with sleeve bearings and speeds equal to or greater than 1000 rev/min and shall be the subject of prior agreement between manufacturer and user with respect to the necessary provisions for the installation of the measurement probes.

7.03 REFERENCES

Referenced documents used in this Part are, ISO 8821, ISO 7919/1, ISO 3945, ISO 2372, ISO 10816-3, and IEC Standard 34-14.

7.04 MEASUREMENT QUANTITY

7.04.1 Bearing Housing Vibration

The criterion adopted for bearing housing vibration is the peak value of the unfiltered vibration velocity in inches per second. The greatest value measured at the prescribed measuring points (see 7.07.2) characterizes the vibration of the machine.

7.04.2 Relative Shaft Vibration

The criterion adopted for relative shaft vibration (relative to the bearing housing) is the peak-to-peak vibratory displacement (S_{p-p}) in inches in the direction of measurement (see ISO 7919/1).

7.05 MEASURING EQUIPMENT

Equipment used to measure vibration shall be accurate to within ±10 percent of the measurement.

7.06 MACHINE MOUNTING

Evaluation of vibration of rotating electrical machines requires measurement of the machines under properly determined test conditions to enable reproducible tests and to provide comparable measurements. The vibration of an electrical machine is closely linked with the mounting of the machine. The choice of the mounting method will be made by the manufacturer. Typically, machines with shaft heights of 11 inches or less use resilient mounting.

NOTE—The shaft height of a machine without feet, or a machine with raised feet, or any vertical machine, is to be taken as the shaft height of a machine in the same basic frame, but of the horizontal shaft foot-mounting type.

7.06.1 Resilient Mounting

This condition is achieved by suspending the machine on a spring or by mounting on an elastic support (springs, rubber, etc.).

The natural oscillation frequencies of the suspension system and machine shall be less than 25 percent of the frequency corresponding to the lowest speed of the machine under test, as defined in 7.07.3. For an easy determination of the necessary elasticity of the suspension system, see the table and graph in Figure 7-1.

The effective mass of the elastic support shall be no greater than 10 percent of that of the machine, to reduce the influence of the mass and the moments of inertia of these parts on the vibration level.

7.06.2 Rigid Mounting

The machine shall be fastened directly to a relatively massive foundation.

A relatively massive foundation is one that has a vibration (in any direction or plane) limited, during testing, to 0.02 in/s peak (0.5 mm/s peak) above any background vibrations. The horizontal and vertical natural frequencies of the complete test arrangement shall not coincide within ±10 percent of the rotational frequency of the machine, within ±5 percent of two times rotational

Copyright National Electrical Manufacturers Association
Provided by IHS under license with NEMA
No reproduction or networking permitted without license from IHS
Not for Resale

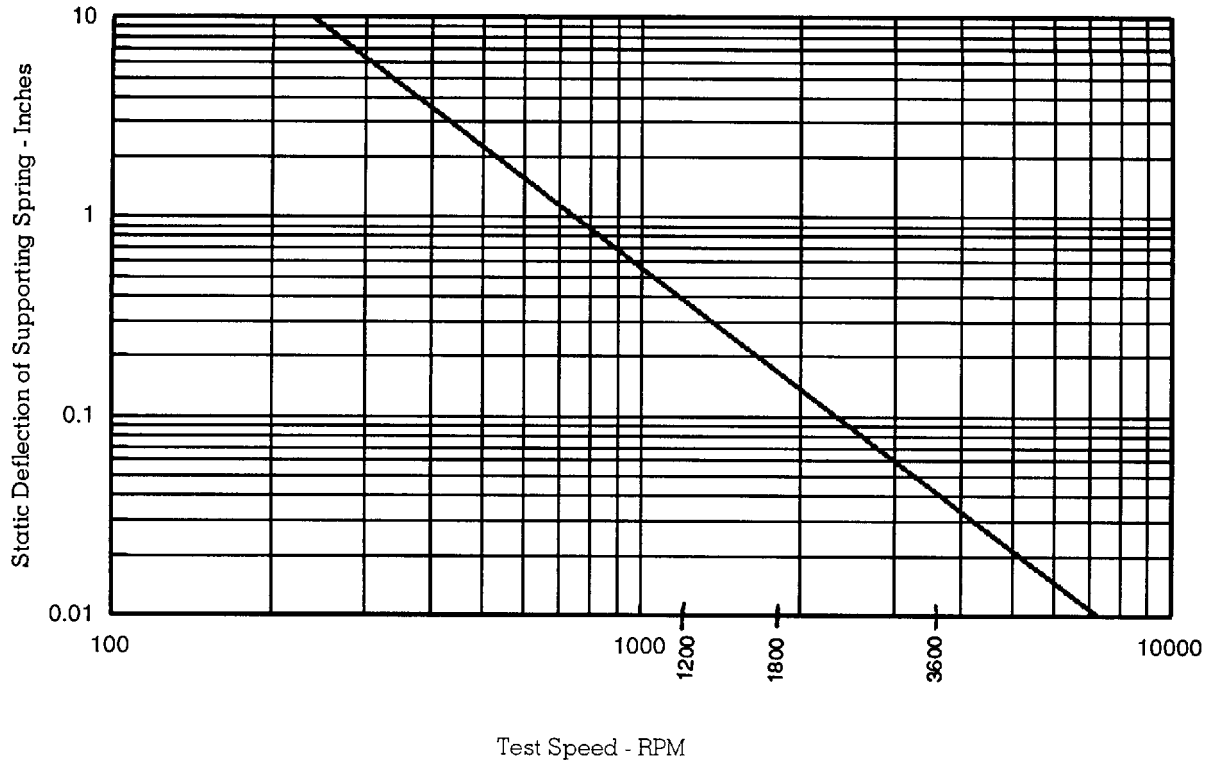

Suggested Limiting Parameters

Mode of deformation	Maximum displacement*
Compression	½ of unloaded dimension
Tension	Equal to free length

*Proportional limit must not be exceeded.

Figure 7-1
MINIMUM ELASTIC DISPLACEMENT AS A FUNCTION OF NOMINAL TEST SPEED

frequency, or within ±5 percent of one- and two-times electrical-line frequency.

NOTE—The rigidity of a foundation is a relative quantity. It must be considered in conjunction with the rigidity of the machine bearing system. The ratio of bearing housing vibration to foundation vibration is a characteristic quantity for the evaluation of foundation flexibility influences. A foundation may be considered to be massive if the vibration amplitudes of the foundation (in any direction) near the machine's feet or base frame are less than 25 percent of the maximum amplitude that is measured at the adjacent bearing housing in any direction.

7.06.3 Active Environment Determination

The support systems mentioned in 7.06.1 and 7.06.2 are considered passive, admitting insignificant external disturbances to the machine. If the vibration with the machine stationary exceeds 25 percent of the value when the machine is running, then an active environment is said to exist. Vibration criteria for active support systems are not given in this Part.

7.07 CONDITIONS OF MEASUREMENT

7.07.1 Shaft Key

For the balancing and measurement of vibration on machines provided with a shaft extension keyway, the keyway shall contain a half key.

NOTE—The definition of half key (see ISO 8821, Sub-clause 3.3) recognizing a half key profiled to the parting line between the shaft and the fitment, and filling the whole of the volume of the keyway, is not normally practical nor is it necessary.

A full length rectangular key of half height or a half length key of full height (which should be centered axially in the keyway) are acceptable as practical alternatives.

Copyright National Electrical Manufacturers Association
Provided by IHS under license with NEMA
No reproduction or networking permitted without license from IHS

Not for Resale

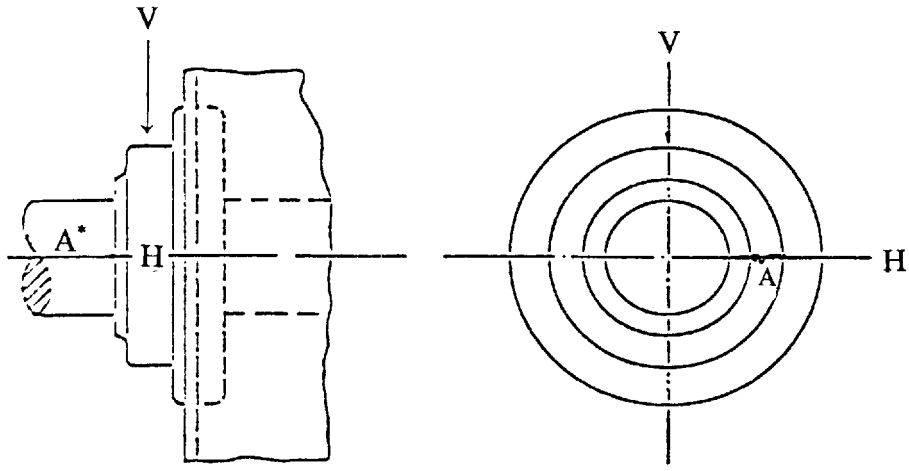

*Delete axial direction if not accessible

Figure 7-2
PREFERRED POINTS OF MEASUREMENT APPLICABLE TO ONE OR BOTH ENDS OF THE MACHINE

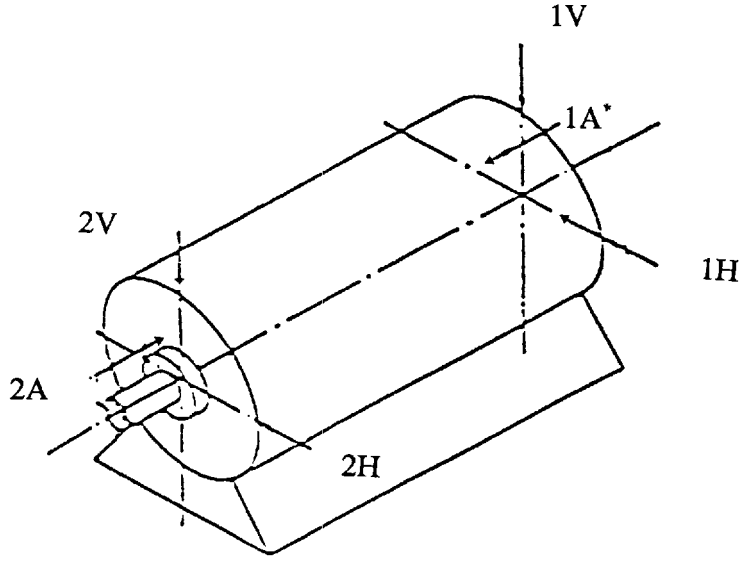

*Delete axial direction if not accessible

Figure 7-3
MEASUREMENT POINTS FOR THOSE ENDS OF MACHINES WHERE MEASUREMENTS FOR FIGURE 7-2 ARE NOT POSSIBLE WITHOUT DISASSEMBLY OF PARTS

Copyright National Electrical Manufacturers Association
Provided by IHS under license with NEMA
No reproduction or networking permitted without license from IHS
Not for Resale

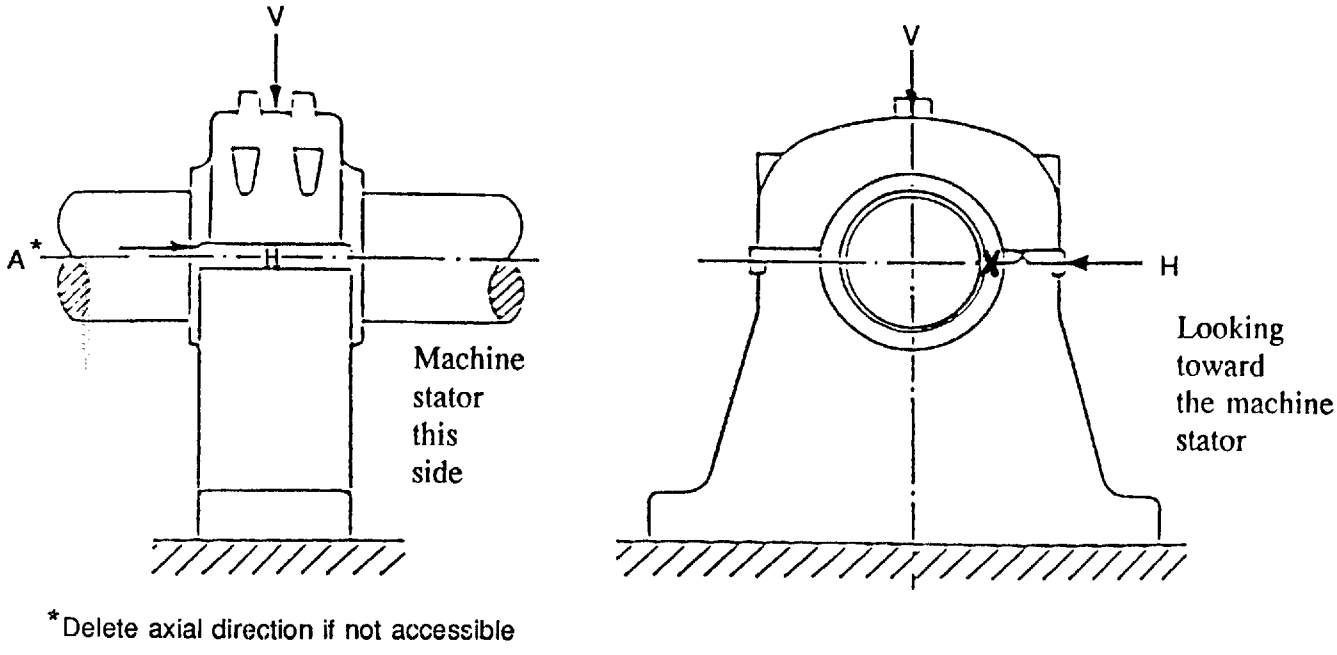

*Delete axial direction if not accessible

Figure 7-4
MEASUREMENT POINTS FOR PEDESTAL BEARINGS

7.07.2 Measurement Points for Vibration

7.07.2.1 BEARING HOUSING

The location of the measurement points and the directions in which the levels of vibration are measured are indicated in Figure 7-2 or Figure 7-3. Figure 7-4 applies to machines with pedestal bearings.

7.07.2.2 SHAFT

Non-contacting transducers for the measurement of shaft vibration, if used, shall be installed inside the bearing, measuring directly the bearing journal displacement, or near the bearing shell, measuring on the shaft near the bearing journal.

7.07.3 Operating Conditions

7.07.3.1 POWER SUPPLY

Alternating current machines shall be run at rated frequency and rated voltage with a virtually sinusoidal wave form. The power supply shall provide balanced phase voltages closely approaching a sinusoidal waveform. The voltage waveform deviation factor[1] shall not exceed 10 percent. The frequency shall be maintained within ±0.5 percent of the value required for the test being conducted, unless otherwise specified. Tests may be performed where the voltage unbalance does not exceed 0.5 percent. The percent voltage unbalance equals 100 times the maximum voltage deviation from the average voltage divided by the average voltage.

Direct current machines shall be supplied with the armature voltage and field current corresponding to the speed at which vibration is being measured. Vibration limits are based upon the use of low ripple power supply A (see 12.62.2.1) power sources. Other types of power supplies may be used for testing purposes at the discretion of the manufacturer.

7.07.3.2 OPERATING SPEED

Unless otherwise specified for machines having more than one fixed speed the limits shall not be exceeded at any operational speed. In Figure 7-1 "nominal test speed" shall be taken as "each operational speed."

For machines with a range of speeds, tests should be performed at base and top speeds only. For inverter-fed

1 The deviation factor of a wave is the ratio of the maximum difference between corresponding ordinates of the wave and of the equivalent sine wave to the maximum ordinate of the equivalent sine wave when the waves are superposed in such a way as to make this maximum difference as small as possible. The equivalent sine wave is defined as having the same frequency and the same root mean square value as the wave being tested.

Copyright National Electrical Manufacturers Association
Provided by IHS under license with NEMA
No reproduction or networking permitted without license from IHS
Not for Resale

machines, it shall be acceptable to measure the vibration at only the speed corresponding to a 60 Hz power supply. Measurement of vibration at other speeds shall be by agreement between the manufacturer and user.

7.07.3.3 OTHER CONDITIONS

For machines that are bi-directional, the vibration limits apply for both directions of rotation, but need to be measured in only one direction.

Measurement of the vibration shall be made with the machine at no load and uncoupled. Measurement of vibration under load and/or at operating temperature shall be by special agreement between manufacturer and user.

7.07.4 Vibration Transducer

Care should be taken to ensure that the contact between the vibration transducer and the machine surface is as specified by the manufacturer of the transducer and does not disturb the vibratory condition of the machine under test. It is important to ensure that the pressure and mass of the transducer have no significant influence on the vibratory state of the machine. In all cases, the total coupled mass of the transducer assembly shall be less than two percent of the mass of the machine.

7.08 Limits of Bearing Housing Vibration

The following limits of vibration are for machines running at no load, uncoupled, and resiliently mounted according to paragraph 7.06.1. For machines tested with rigid mounting, these values shall be reduced by multiplying them by 0.8.

Vibration levels shown in the following paragraphs represent internally excited vibration only. Motors as installed (in situ) may exhibit higher levels. This is generally caused by misalignment or the influence of the driven or driving equipment, including coupling, or a mechanical resonance of the mass of the motor with the resilience of the machine or base on which it is mounted.

NOTE—International Standards specify vibration velocity as rms in mm/s. To obtain an approximate metric rms equivalent, multiply the peak vibration in in/s by 18.

Figure 7-5 establishes the limits for bearing housing vibration levels of machines resiliently mounted for both unfiltered and filtered measurements.

For unfiltered vibration the measured velocity level shall not exceed the limit for the appropriate curve on Figure 7-5 corresponding to the rotational frequency.

For filtered vibration the velocity level at each component frequency of the spectrum analysis shall not exceed the value for the appropriate curve in Figure 7-5 at that frequency.

Unfiltered measurements of velocity, displacement, and acceleration may be used in place of a spectrum analysis to determine that the filtered vibration levels over the frequency range do not exceed the limits of the appropriate curve in Figure 7-5. For example, for the top curve in Figure 7-5 the unfiltered velocity should not exceed 0.15 in/s peak (3.8 mm/second), the displacement should not exceed 0.0025 inch (p-p) (66 rpm), and the acceleration should not exceed 1g (peak).

7.08.1 Standard Machines

Unfiltered vibration shall not exceed the velocity levels as shown in the top curve of Figure 7-5 for standard (no special vibration requirements) machines resiliently mounted.

For example, the limits at rotational frequency are as shown in Table 7-1.

Table 7-1
UNFILTERED VIBRATION LIMITS

Speed, rpm	Rotational Frequency, Hz	Velocity, in/s peak (mm/s)
3600	60	0.15 (3.8)
1800	30	0.15 (3.8)
1200	20	0.15 (3.8)
900	15	0.12 (3.0)
720	12	0.09 (2.3)
600	10	0.08 (2.0)

7.08.2 Special Machines

For machines requiring vibration levels lower than given in Figure 7-5 at limit 0.15 (standard machines), vibration levels shall not exceed the limits shown by the various curves of Figure 7-5. Machines to which these lower levels apply (e.g., 0.08, 0.04, 0.02 or 0.01) shall be by agreement between manufacturer and purchaser.

NOTE—It is not practical to achieve all vibration limits in Figure 7-5 for all machine types in all sizes.

7.08.3 Vibration Banding for Special Machines

Banding is a method of dividing the frequency range into frequency bands and applying a vibration limit to each band. Banding recognizes that the vibration level at various frequencies is a function of the source of excitation (bearings, for example) and is grouped (banded) in multiples of rotational frequency.

Figure 7-6 demonstrates three examples of banding based on a resolution of 400 lines or less. Profile 'A' has a band permitting a higher level at rotational frequency but with all other bands equivalent to Profile 'B' limits. Profiles 'B' and 'C' are examples of banding limits for machines requiring lower vibration levels.

Copyright National Electrical Manufacturers Association
Provided by IHS under license with NEMA
No reproduction or networking permitted without license from IHS
Not for Resale

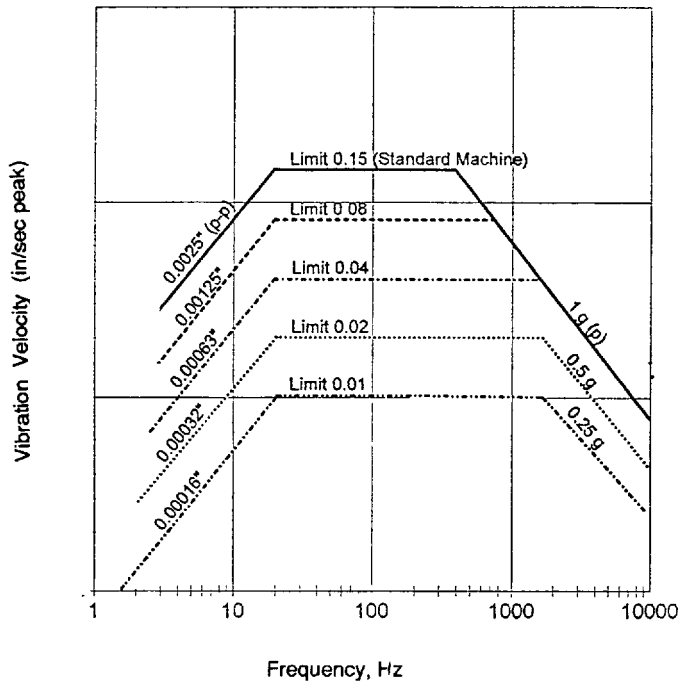

NOTE—The intersection of constant displacement lines with constant velocity lines occurs at approximately 20 Hz.
The intersection of constant velocity lines with constant acceleration lines occurs at approximately 400, 700, and 1500 Hz for limits 0.15, 0.08, and other, respectively.

Vibration Limit	Machine Type-General Examples
0.15	Standard industrial motors Motors for commercial/ residential use
0.08	Machine tool motors Medium/large motors with special requirements
0.04	Grinding wheel motors Small motors with special requirements
0.02	Precision spindle and grinder motors
0.01	Precision motors with special requirements

Figure 7-5
MACHINE VIBRATION LIMITS
(Resiliently mounted)

Copyright National Electrical Manufacturers Association
Provided by IHS under license with NEMA
No reproduction or networking permitted without license from IHS
Not for Resale

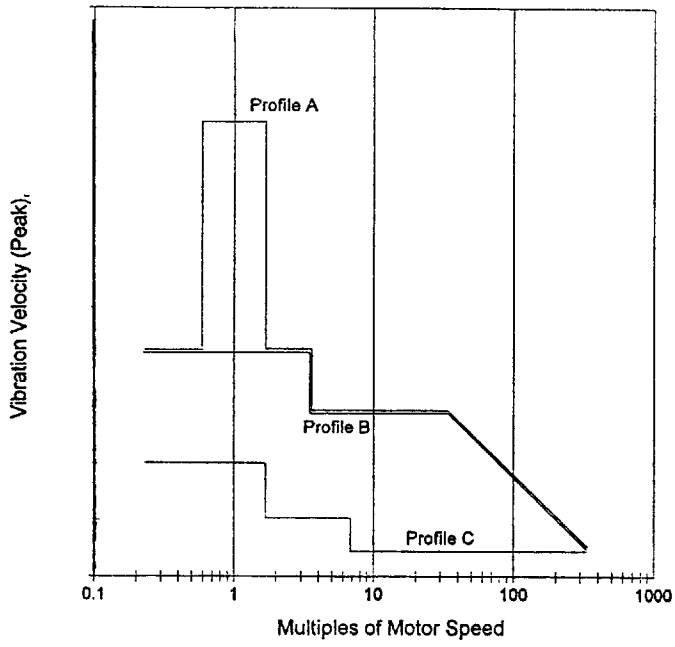

Figure 7-6
EXAMPLES OF
SPECIAL MACHINE VIBRATION LIMITS
PEAK VELOCITY BANDING PROFILES

Compliance is based on plots from a spectrum analyzer with a resolution of 400 lines or more and a flat response over the frequency range being tested in which the peak velocities do not exceed the limits specified for the corresponding frequency bands.

Actual vibration limits and bands specified for machines shall be by agreement between manufacturer and purchaser.

7.08.4 Twice Line Frequency Vibration

Twice electrical-line frequency vibrations may be excited by the magnetic field within the airgap on two-pole three-phase AC induction motors or from mechanical dissimilarities on two-pole three-phase AC synchronous machines. Should the problem exist, its evaluation requires a rigid mounting of the machine which complies with the requirements given in paragraph 7.06.2.

NOTE—Twice electrical-line frequency vibration modulates at the rotor slip frequency and continuous vibration monitoring during a slip cycle (the time required for one revolution at slip frequency) is normally necessary. AC induction machines running at no load may require ten minutes or longer for these measurements at each vibration measuring point.

7.08.5 Axial Vibration

The evaluation of axial bearing housing or support vibration depends on the bearing installation, bearing function and bearing design, plus uniformity of the rotor and stator cores.

In the case of thrust bearing applications, axial vibrations correlate with thrust loading and axial stiffness. Axial vibration of these configurations should be measured with axial thrust applied, when practical.

Where bearings have no axial load capability or function, axial vibration of these configurations should be judged in the same manner as vibration levels in 7.08.1 and 7.08.2.

7.09 LIMITS OF RELATIVE SHAFT VIBRATION

Shaft vibration limits are measured by non-contacting proximity probes. These probes are sensitive to mechanical and magnetic anomalies of the shaft or on the surface of the shaft to which it responds. This is commonly referred to as "electrical and mechanical probe-track runout." The combined electrical and mechanical runout of the shaft shall not exceed 0.0005 inch peak-to-peak (6.4 μm peak-to-peak) or 25 percent of the vibration displacement limit, whichever is greater. The probe-track runout is measured with the rotor at a slow-roll (100-400 rpm) speed, where the mechanical unbalance forces on the rotor are negligible. It is preferred that the shaft be rotating on the machine bearings, positioned at running axial center (magnetic center), when the runout determinations are made.

NOTES

1—Special shaft surface preparation (burnishing and degaussing) may be necessary to obtain the required peak-to-peak runout readings.

2—Shaft vibration measurements require special provisions for the installation of the measurement probes and shall therefore be subject of prior agreement between manufacturer and purchaser.

7.09.1 Standard Machines

When specified, the limits for the relative shaft vibration of rigidly mounted, standard machines with sleeve bearings, inclusive of electrical and mechanical runout, shall not exceed the limits in Table 7-2.

7.09.2 Special Machines

Special machines requiring lower relative shaft vibration levels than shown in Table 7-2 shall not exceed the limits in Table 7-3 which are inclusive of electrical and mechanical runout.

Copyright National Electrical Manufacturers Association
Provided by IHS under license with NEMA
No reproduction or networking permitted without license from IHS
Not for Resale

Table 7-2
LIMITS FOR THE UNFILTERED MAXIMUM RELATIVE SHAFT DISPLACEMENT (S_{p-p}) FOR STANDARD MACHINES

Speed, rpm	Maximum Relative Shaft Displacement (Peak-to-Peak)
3600	0.0028 inches (70 μm)
≤1800	0.0035 inches (90 μm)

Table 7-3
LIMITS FOR THE UNFILTERED MAXIMUM RELATIVE SHAFT DISPLACEMENT (S_{p-p}) FOR SPECIAL MACHINES

Speed, rpm	Maximum Relative Shaft Displacement (Peak-to-Peak)
3600	0.0020 inches (50 μm)
1800	0.0028 inches (70 μm)
≤1200	0.0030 inches (76 μm)

Copyright National Electrical Manufacturers Association
Provided by IHS under license with NEMA
No reproduction or networking permitted without license from IHS

Not for Resale

Section II

SMALL (FRACTIONAL) AND MEDIUM (INTEGRAL) MACHINES

Part 10

RATINGS—AC SMALL AND MEDIUM MOTORS

10.0 SCOPE

The standards in this Part 10 of Section II cover alternating-current motors up to and including the ratings built in frames corresponding to the continuous open-type ratings given in the table below.

Synchronous Speed	Motors Squirrel-Cage and Wound Rotor, Hp	Motors, Synchronous, Hp Power Factor	
		Unity	0.8
3600	500	500	400
1800	500	500	400
1200	350	350	300
900	250	250	200
720	200	200	150
600	150	150	125
514	125	125	100

10.30 VOLTAGES

a. Universal motors—115 and 230 volts
b. Single-phase motors
   1. 60 hertz—115, 200, and 230 volts
   2. 50 hertz—110 and 220 volts
c. Polyphase motors
   1. 60 hertz—115*, 200, 230, 460, 575, 2300, 4000, 4600, and 6600 volts
   2. Three phase, 50 hertz—220 and 380 volts

NOTE—It is not practical to build motors of all horsepower ratings for all of the standard voltages.
*Applies only to motors rated 15 horsepower and smaller.

10.31 FREQUENCIES

10.31.1 Alternating-Current Motors

The frequency shall be 50 and 60 hertz.

10.31.2 Universal Motors

The frequency shall be 60 hertz/direct current.

NOTE—Universal motors will operate successfully on all frequencies below 60 hertz and on direct current.

Table 10-1
HORSEPOWER AND SPEED RATINGS, SMALL INDUCTION MOTORS

	All Motors Except Shaded-Pole and Permanent-Split Capacitor		Permanent-Split Capacitor Motors	All Motors Except Shaded-Pole and Permanent-Split Capacitor		Permanent-Split Capacitor Motors
Hp	60-Hertz Synchronous Rpm	Approximate Rpm at Rated Load		50-Hertz Synchronous Rpm	Approximate Rpm at Rated Load	
1, 1.5, 2, 3, 5, 7.5, 10, 15, 25, and 35 millihorsepower	3600	3450	...	3000	2850	...
	1800	1725	...	1500	1425	...
	1200	1140	...	1000	950	...
	900	...	...			
1/20, 1/12, and 1/8 horsepower	3600	3450	...	3000	2850	...
	1800	1725	...	1500	1425	...
	1200	1140	...	1000	950	...
	900	850	...			
1/6, 1/4, and 1/3 horsepower	3600	3450	...	3000	2850	...
	1800	1725	...	1500	1425	...
	1200	1140	...	1000	950	...
	900	850	...			
1/2 horsepower	3600	3450	3250	3000	2850	2700
	1800	1725	1625	1500	1425	1350
	1200	1140	1075	1000	950	900
3/4 horsepower	3600	3450	3250	3000	2850	2700
	1800	1725	1625	1500	1425	1350
1 horsepower	3600	3450	3250	3000	2850	2700

Copyright National Electrical Manufacturers Association
Provided by IHS under license with NEMA
No reproduction or networking permitted without license from IHS

Not for Resale

10.32 HORSEPOWER AND SPEED RATINGS

10.32.1 Small Induction Motors, Except Permanent-Split Capacitor Motors Rated 1/3 Horsepower and Smaller and Shaded-Pole Motors

The horsepower and speed ratings for small induction motors rated 115, 200, and 230 volts single phase and 115, 200[1], and 230 volts polyphase shall be as shown in Table 10-1.

10.32.2 Small Induction Motors, Permanent-Split Capacitor Motors Rated 1/3 Horsepower and Smaller, and Shaded-Pole Motors

The horsepower and speed ratings for small induction motors rated 115, 200, and 230 volts single-phase shall be as shown in Table 10-2.

10.32.3 Single-Phase Medium Motors

The horsepower and synchronous speed ratings of single-phase medium motors rated 115, 200, and 230 volts shall be as shown in Table 10-3.

10.32.4 Polyphase Medium Induction Motors

The horsepower and synchronous speed ratings of polyphase medium induction motors shall be as shown in Table 10-4.

10.32.5 Universal Motors

Horsepower ratings shall be 10, 15, 25, and 35 millihorsepower and 1/20, 1/12, 1/8, 1/6, 1/4, 1/3, 1/2, 3/4, and 1 horsepower at a rated speed of 5000 rpm or above.

NOTE—At speeds less than 5000 rpm, there will be a marked difference in performance characteristics between operation on alternating current and operation on direct current.

10.33 HORSEPOWER RATINGS OF MULTISPEED MOTORS

The horsepower rating of multispeed motors shall be selected as follows.

10.33.1 Constant Horsepower

The horsepower rating for each rated speed shall be selected from 10.32.

Table 10-2
HORSEPOWER AND SPEED RATINGS, PERMANENT-SPLIT CAPACITOR AND SHADED POLE MOTORS

Permanent-Split Capacitor Motors				
Hp	60-Hertz Synchronous Rpm	Approximate Rpm at Rated Load	50-Hertz Synchronous Rpm	Approximate Rpm at Rated Load
1, 1.25, 1.5, 2, 2.5, 3, 4, 5, 6, 8, 10, 12.5, 16, 20, 25, 30, and 40 millihorsepower	3600 1800 1200 900	3000 1550 1050 800	3000 1500 1000	2500 1300 875
1/20, 1/15, 1/12, 1/10, 1/8, 1/6, 1/5, 1/4, and 1/3 horsepower	3600 1800 1200 900	3250 1625 1075 825	3000 1500 1000	2700 1350 900
Shaded-Pole Motors				
	60-Hertz Synchronous Rpm	Approximate Rpm at Rated Load	50-Hertz Synchronous Rpm	Approximate Rpm at Rated Load
1, 1.25, 1.5, 2, 2.5, 3, 4, 5, 6, 8, 10, 12.5, 16, 20, 25, 30, and 40 millihorsepower	1800 1200 900	1550 1050 800	1500 1000	1300 875
1/20, 1/15, 1/12, 1/10, 1/8, 1/6, 1/5, and 1/4 horsepower	1800 1200 900	1550 1050 800	1500 1000	1300 875

[1] Applies to 60-hertz circuits only.

Copyright National Electrical Manufacturers Association
Provided by IHS under license with NEMA
No reproduction or networking permitted without license from IHS

Not for Resale

Table 10-3
HORSEPOWER AND SPEED RATINGS, MEDIUM MOTORS

HP	60-Hertz Synchronous Rpm				50 Rpm Hertz Synchronous Rpm			
1/2	...	...	...	900	...	...	1000	750
3/4	...	...	1200	900	...	1500	1000	750
1	...	1800	1200	900	3000	1500	1000	750
1-1/2	3600	1800	1200	900	3000	1500	1000	750
2	3600	1800	1200	900	3000	1500	1000	750
3	3600	1800	1200	900	3000	1500	1000	750
5	3600	1800	1200	900	3000	1500	1000	750
7-1/2	3600	1800	1200	900	3000	1500	1000	750
10	3600	1800	1200	900	3000	1500	1000	750

Table 10-4*
HORSEPOWER AND SPEED RATINGS, POLYPHASE MEDIUM INDUCTION MOTORS

HP	60-Hertz Synchronous Rpm							50 Rpm Hertz Synchronous Rpm			
1/2	...	...	900	720	600	514		...	...	...	750
3/4	...	...	1200	900	720	600	514	...	...	1000	750
1	...	1800	1200	900	720	600	514	...	1500	1000	750
1-1/2	3600**	1800	1200	900	720	600	514	3000	1500	1000	750
2	3600**	1800	1200	900	720	600	514	3000	1500	1000	750
3	3600**	1800	1200	900	720	600	514	3000	1500	1000	750
5	3600**	1800	1200	900	720	600	514	3000	1500	1000	750
7-1/2	3600**	1800	1200	900	720	600	514	3000	1500	1000	750
10	3600**	1800	1200	900	720	600	514	3000	1500	1000	750
15	3600**	1800	1200	900	720	600	514	3000	1500	1000	750
20	3600**	1800	1200	900	720	600	514	3000	1500	1000	750
25	3600**	1800	1200	900	720	600	514	3000	1500	1000	750
30	3600**	1800	1200	900	720	600	514	3000	1500	1000	750
40	3600**	1800	1200	900	720	600	514	3000	1500	1000	750
50	3600**	1800	1200	900	720	600	514	3000	1500	1000	750
60	3600**	1800	1200	900	720	600	514	3000	1500	1000	750
75	3600**	1800	1200	900	720	600	514	3000	1500	1000	750
100	3600**	1800	1200	900	720	600	514	3000	1500	1000	750
125	3600**	1800	1200	900	720	600	514	3000	1500	1000	750
150	3600**	1800	1200	900	720	600	...	3000	1500	1000	750
200	3600**	1800	1200	900	720	...	...	3000	1500	1000	750
250	3600**	1800	1200	900	...	...	...	3000	1500	1000	750
300	3600**	1800	1200	...	...	...	...	3000	1500	1000	...
350	3600**	1800	1200	...	...	...	...	3000	1500	1000	...
400	3600**	1800	...	...	...	...	...	3000	1500	...	...
450	3600**	1800	...	...	...	...	...	3000	1500	...	...
500	3600**	1800	...	...	...	...	...	3000	1500	...	...

*For frame assignments, see MG 13.
**Applies to squirrel cage motors only.

Copyright National Electrical Manufacturers Association
Provided by IHS under license with NEMA
No reproduction or networking permitted without license from IHS
Not for Resale

10.33.2 Constant Torque

The horsepower rating for the highest rated speed shall be selected from 10.32. The horsepower rating for each lower speed shall be determined by multiplying the horsepower rating at the highest speed by the ratio of the lower synchronous speed to the highest synchronous speed.

10.33.3 Variable Torque

The horsepower rating for the highest rated speed shall be selected from 10.32. The horsepower rating for each lower speed shall be determined by multiplying the horsepower rating at the highest speed by the square of the ratio of the lower synchronous speed to the highest synchronous speed.

10.34 BASIS OF HORSEPOWER RATING

10.34.1 The horsepower rating of a small or medium single-phase induction motor is based upon breakdown torque (see 1.51). The value of breakdown torque to be expected by the user for any horsepower and speed shall fall within the range given in Tables 10-5 and 10-6.

10.34.2 The breakdown torque which determines the horsepower rating is that obtained in a test when the temperature of the winding and other parts of the machine are at approximately 25°C at the start of the test.

10.34.3 The minimum value of breakdown torque obtained in the manufacture of any design will determine the rating of that design. Tolerances in manufacturing will result in individual motors having breakdown torque from 100 percent to approximately 115 percent (125 percent for motors rated millihorsepower and for all shaded-pole motors) of the value on which the rating is based, but this excess torque shall not be relied upon by the user in applying the motor to its load.

Table 10-5*†
BREAKDOWN TORQUE FOR INDUCTION MOTORS, EXCEPT SHADED-POLE AND PERMANENT-SPLIT CAPACITOR MOTORS

60	50	60	50	60	50	60	50		Frequencies, Hertz
3600	3000	1800	1500	1200	1000	900	750		Synchronous Speeds, Rpm
3450**	2850**	1725**	1425**	1140**	950**	850**	...	Hp	Small Motors, Nominal Speeds, Rpm
0.35–0.55	0.42–0.66	0.7–1.1	0.85–1.3	1.1–1.65	...	...	...	Millihp	
0.55–0.7	0.66–0.85	1.1–1.45	1.3–1.75	1.65–2.2	...	...	...	1	
0.7–1.1	0.85–1.3	1.45–2.2	1.75–2.6	2.2–3.3	...	...	...	1.5	
1.1–1.8	1.3–2.2	2.2–3.6	2.6–4.3	3.3–5.4	...	...	...	2	The figures at left are for motors rated less than 1/20 horsepower. Breakdown torques in oz-in.
1.8–2.7	2.2–3.2	3.6–5.4	4.3–6.6	5.4–8.1	...	...	...	3	
2.7–3.6	3.2–4.3	5.4–7.2	6.6–8.6	8.1–11	...	...	...	7.5	
3.6–5.5	4.3–6.6	7.2–11	8.6–13	11–17	...	...	...	10	
5.5–9.5	6.6–11.4	11–19	13–23	17–29	...	...	...	15	
9.5–15	11.4–18	19–30	23–36	29–46	...	...	...	25	
15–24	18–28.8	30–48	36–57.6	46–72	...	...	...	35	
								Hp	
2.0–3.7	2.4–4.4	4.0–7.1	4.8–8.5	6.0–10.4	7.2–12.4	8.0–13.5	...	1/20	
3.7–6.0	4.4–7.2	7.1–11.5	8.5–13.8	10.4–16.5	12.4–19.8	13.5–21.5	...	1/12	The figures at left are for small motors. Breakdown torques in oz-ft.
6.0–8.7	7.2–10.5	11.5–16.5	13.8–19.8	16.5–24.1	19.8–28.9	21.5–31.5	...	1/8	
8.7–11.5	10.5–13.8	16.5–21.5	19.8–25.8	24.1–31.5	28.9–37.8	31.5–40.5	...	1/6	
11.5–16.5	13.8–19.8	21.5–31.5	25.8–37.8	31.5–44.0	37.8–53.0	40.5–58.0	...	1/4	
16.5–21.5	19.8–25.8	31.5–40.5	37.8–48.5	44.0–58.0	53.0–69.5	58.0–77.0	...	1/3	
21.5–31.5	25.8–37.8	40.5–58.0	48.5–69.5	58.0–82.5	69.5–99.0	††	††	1/2	
31.5–44.0	37.8–53.0	58.0–82.5	69.5–99.0	5.16–6.9	††	††	††	3/4	
44.0–58.0	53.0–69.5	5.16–6.8	6.19–8.2	6.9–9.2	††	††	††	1	
3.6–4.6	4.3–5.5	6.8–10.1	8.2–12.1	9.2–13.8	††	††	††	1-1/2	The figures at left are for medium motors. Breakdown torques in oz-ft.
4.6–6.0	5.5–7.2	10.1–13.0	12.1–15.6	13.8–18.0	††	††	††	2	
6.0–8.6	7.2–10.2	13.0–19.0	15.6–22.8	18.0–25.8	††	††	††	3	
8.6–13.5	10.2–16.2	19.0–30.0	22.8–36.0	25.8–40.5	††	††	††	5	
13.5–20.0	16.2–24.0	30.0–45.0	36.0–54.0	40.5–60.0	††	††	††	7-1/2	
20.0–27.0	24.0–32.4	45.0–60.0	54.0–72.0	††	††	††	††	10	

*The breakdown torque range includes the higher figure down to, but not including, the lower figure.
**These approximate full-load speeds apply only for small motor ratings.
†The horsepower ratings of motors designed to operate on two or more frequencies shall be determined by the torque at the highest rated frequency.
††These are ratings for which no torque values have been established.

Copyright National Electrical Manufacturers Association
Provided by IHS under license with NEMA
No reproduction or networking permitted without license from IHS
Not for Resale

Table 10-6*†
BREAKDOWN TORQUE FOR SHADED-POLE AND PERMANENT-SPLIT CAPACITOR MOTORS FOR FAN AND PUMP APPLICATIONS
(For permanent-split capacitor hermetic motors, see 18.081.)

60	50	60	50	60		Frequencies, Hertz
1800	1500	1200	1000	900		Synchronous Speeds, Rpm
					Hp	Approximate Full-Load Speeds, Rpm
					Millihp	
0.89–1.1	1.1–1.3	1.3–1.6	1.6–1.9	1.7–2.1	1	
1.1–1.4	1.3–1.7	1.6–2.1	1.9–2.5	2.1–2.7	1.25	
1.4–1.7	1.7–2.0	2.1–2.5	2.5–3.0	2.7–3.3	1.5	
1.7–2.1	2.0–2.5	2.5–3.1	3.0–3.7	3.3–4.1	2	
2.1–2.6	2.5–3.1	3.1–3.8	3.7–4.6	4.1–5.0	2.5	
2.6–3.2	3.1–3.8	3.8–4.7	4.6–5.7	5.0–6.2	3	
3.2–4.0	3.8–4.8	4.7–5.9	5.7–7.1	6.2–7.8	4	
4.0–4.9	4.8–5.8	5.9–7.2	7.1–8.7	7.8–9.5	5	The figures at left are
4.9–6.2	5.8–7.4	7.2–9.2	8.7–11.0	9.5–12.0	6	breakdown torques in oz-in.
6.2–7.7	7.4–9.2	9.2–11.4	11.0–13.6	12.0–14.9	8	
7.7–9.6	9.2–11.4	11.4–14.2	13.6–17.0	14.9–18.6	10	
9.6–12.3	11.4–14.7	14.2–18.2	17.0–21.8	18.6–23.8	12.5	
12.3–15.3	14.7–18.2	18.2–22.6	21.8–27.1	23.8–29.6	16	
15.3–19.1	18.2–22.8	22.6–28.2	27.1–33.8	29.6–37.0	20	
19.1–23.9	22.8–28.5	28.2–35.3	33.8–42.3	37.0–46.3	25	
23.9–30.4	28.5–36.3	35.3–44.9	42.3–53.9	46.3–58.9	30	
30.4–38.3	36.3–45.6	44.9–56.4	53.9–68.4	58.9–74.4	40	
					Hp	
3.20–4.13	3.80–4.92	4.70–6.09	5.70–7.31	6.20–8.00	1/20	
4.13–5.23	4.92–6.23	6.09–7.72	7.31–9.26	8.00–10.1	1/15	
5.23–6.39	6.23–7.61	7.72–9.42	9.26–11.3	10.1–12.4	1/12	The figures at left are
6.39–8.00	7.61–9.54	9.42–11.8	11.3–14.2	12.4–15.5	1/10	breakdown torques in oz-ft.
8.00–10.4	9.54–12.4	11.8–15.3	14.2–18.4	15.5–20.1	1/8	
10.4–12.7	12.4–15.1	15.3–18.8	18.4–22.5	20.1–24.6	1/6	
12.7–16.0	15.1–19.1	18.8–23.6	22.5–28.3	24.6–31.0	1/5	
16.0–21.0	19.1–25.4	23.6–31.5	28.3–37.6	31.0–41.0	1/4	
21.0–31.5	25.4–37.7	31.5–47.0	37.6–56.5	41.0–61.0	1/3	
31.5–47.5	37.7–57.3	47.0–70.8	56.5–84.8	3.81–5.81	1/2	
47.5–63.5	57.3–76.5	4.42–5.88	5.30–7.06	5.81–7.62	3/4	The figures at left are
3.97–5.94	4.78–7.06	5.88–8.88	7.06–10.6	7.62–11.6	1	breakdown torques in lb-ft.
5.94–7.88	7.06–9.56	8.88–11.8	10.6–14.1	11.6–15.2	1-1/2	

*The breakdown torque range includes the higher figure down to, but not including, the lower figure.
†The horsepower rating of motors designed to operate on two or more frequencies shall be determined by the torque at the highest rated frequency.

10.35 SECONDARY DATA FOR WOUND-ROTOR MOTORS

Hp	Secondary Volts*	Maximum Secondary, Amperes	Hp	Secondary Volts*	Maximum Secondary, Amperes
1	90	6	25	220	60
1½	110	7.3	30	240	65
2	120	8.4	40	315	60
3	145	10	50	350	67
5	140	19	60	375	74
7½	165	23	75	385	90
10	195	26.5	100	360	130
15	240	32.5	125	385	150
20	265	38	150	380	185

*Tolerance—plus or minus 10 percent.

Copyright National Electrical Manufacturers Association
Provided by IHS under license with NEMA
No reproduction or networking permitted without license from IHS

Not for Resale

10.36 TIME RATINGS FOR SINGLE-PHASE AND POLYPHASE INDUCTION MOTORS

The time ratings for single-phase and polyphase induction motors shall be 5, 15, 30 and 60 minutes and continuous.

All short-time ratings are based upon a corresponding short-time load test which shall commence only when the winding and other parts of the machine are within 5°C of the ambient temperature at the time of the starting of the test.

10.37 CODE LETTERS (FOR LOCKED-ROTOR kVA)—NAMEPLATE MARKINGS

10.37.1 The nameplate of every alternating-current motor, except a polyphase wound-rotor motor, rated 1/2 horsepower and larger shall be marked with the caption "Code" followed by a letter selected from the table in 10.37.2 to show the locked-rotor kVA per horsepower.

10.37.2 The letter designations for locked-rotor kVA per horsepower as measured at full voltage and rated frequency are as follows.

Letter Designation	kVA per Horsepower*	Letter Designation	kVA per Horsepower*
A	0–3.15	K	8.0–9.0
B	3.15–3.55	L	9.0–10.0
C	3.55–4.0	M	10.0–11.2
D	4.0–4.5	N	11.2–12.5
E	4.5–5.0	P	12.5–14.0
F	5.0–5.6	R	14.0-16.0
G	5.6–6.3	S	16.0–18.0
H	6.3–7.1	T	18.0–20.0
J	7.1–8.0	U	20.0–22.4
		V	22.4–and up

*Locked kVA per horsepower range includes the lower figure up to, but not including, the higher figure. For example, 3.14 is designated by letter A and 3.15 by letter B.

10.37.3 Multispeed motors shall be marked with the code letter designating the locked-rotor kVA per horsepower for the highest speed at which the motor can be started, except constant-horsepower motors which shall be marked with the code letter for the speed giving the highest locked-rotor kVA per horsepower.

10.37.4 Single-speed motors starting on Y connection and running on delta connection shall be marked with a code letter corresponding to the locked-rotor kVA per horsepower for the Y connection.

10.37.5 Broad- or dual-voltage motors which have a different locked-rotor kVA per horsepower on the different voltages shall be marked with the code letter for the voltage giving the highest locked-rotor kVA per horsepower.

10.37.6 Motors with 60- and 50-hertz ratings shall be marked with a code letter designating the locked-rotor kVA per horsepower on 60 hertz.

10.37.7 Part-winding-start motors shall be marked with a code letter designating the locked-rotor kVA per horsepower that is based upon the locked-rotor current for the full winding of the motor.

10.38 NAMEPLATE TEMPERATURE RATINGS FOR ALTERNATING-CURRENT SMALL AND UNIVERSAL MOTORS

Alternating-current motors shall be rated on the basis of a maximum ambient temperature and the insulation system class.

The rated value of the maximum ambient temperature shall be 40°C unless otherwise specified, and the insulation system shall be Class A, B, F, or H. All such ratings are based upon a rated load test with temperature rise values (measured by either method when two methods are listed) not exceeding those shown for the designated class of insulation system in the appropriate temperature rise table in 12.42. Ratings of alternating-current motors for any other value of maximum ambient temperature shall be based on temperature rise values as calculated in accordance with 12.42.

10.39 NAMEPLATE MARKING FOR ALTERNATING-CURRENT SMALL AND UNIVERSAL MOTORS[1] ▲

The following information shall be given on all nameplates. For motors with dual ratings, see 10.39.5. For abbreviations, see 1.80. For some examples of additional information that may be included on the nameplate see 10.39.6.

10.39.1 Alternating-Current Single-Phase and Polyphase Squirrel-Cage Motors, Except Those Included in 10.39.2, 10.39.3, and 10.39.4

a. Manufacturer's type and frame designation
b. Horsepower output
c. Time rating
d. Maximum ambient temperature for which motor is designed (see Note 1 of 12.42.1)

[1] When air flow is required over the motor from the driven equipment in order to have the motor conform to temperature rise standards, "air over" shall appear on the nameplate. When the heat dissipating characteristics of the driven equipment, other than air flow, are required in order to have the motor conform to temperature rise standards, "auxiliary cooling" shall appear on the nameplate.

Copyright National Electrical Manufacturers Association
Provided by IHS under license with NEMA
No reproduction or networking permitted without license from IHS
Not for Resale

e. Insulation system designation. (If stator and rotor use different classes of insulation systems, both insulation system designations shall be given on the nameplate, that for stator being given first.)
f. Rpm at full load
g. Frequency
h. Number of phases
i. Voltage
j. Full-load amperes
k. Code letter for locked-rotor kVA (see 10.37.1)
l. For motors equipped with thermal protection, the words "thermally protected" and, for motors rated more than 1 horsepower, a type number (See 12.57.) (For their own convenience, motor manufacturers shall be permitted to use letters, but not numbers, preceding or following the words "thermally protected" for other identification purposes.)

10.39.2 Motors Rated Less Than 1/20 Horsepower

a. Manufacturer's type and frame designation
b. Power output
c. Full-load speed[1]
d. Voltage rating
e. Frequency
f. Number of phases-polyphase only (this shall be permitted to be designated by a number showing the number of phases following the frequency)
g. The words "thermally protected" for motors equipped with a thermal protector[2] (See 1.71 and 1.72.)(For their own convenience, motor manufacturers shall be permitted to use letters, but not numbers, preceding or following the words "thermally protected" for other identification purposes.) Thermally-protected motors rated 100 watts or less and complying with 430-32(c)(2) of the National Electrical Code, shall be permitted to use the abbreviated marking, "T.P."
h. The words "impedance protected" for motors with sufficient impedance within the motors so that they are protected from the dangerous overheating due to overload or failure to start. Impedance-protected motors rated 100 watts or less and complying with 430-32(c)(4) of the National Electrical Code, shall be permitted to use the abbreviated marking, "Z.P."

10.39.3 Universal Motors

a. Manufacturer's type and frame designation
b. Horsepower output
c. Time rating
d. Rpm at full load
e. Voltage
f. Full-load amperes (on 60 hertz)
g. Frequency (60/dc is recommended form)

10.39.4 Motors Intended for Assembly in a Device Having Its Own Markings

a. Voltage rating
b. Frequency
c. Number of phases-polyphase only (this shall be permitted to be designated by a number showing the number of phases following the frequency)

10.39.5 Motors for Dual Voltage

a. Broad Voltage (no reconnection of motor leads)
Use dash between voltages (i.e., 200-300)
b. Dual Voltage (reconnection of motor leads)
Use slash between voltages (i.e., 230/460)
Use slash between amperes (i.e., 4.6/2.3)
c. Dual Frequency and Single voltage
Use ampersand (&) between values for each frequency

Hz	(i.e., 60&50)
Volt	(i.e., 115&110)
Rpm	(i.e., 1725&1450)
Amp	(i.e., 5.0&6.0)

NOTE—If spacing in standard location on nameplate is not adequate, the values of alternative frequency and associated volts, rpm and amps shall be permitted to be specified at a different location on the nameplate.

d. Dual Frequency and Dual Voltage
Use slash between voltages for one frequency and ampersand (&) between values for each frequency.

Hz	(i.e., 60&50)
Volt	(i.e., 115/230&110/220)
Rpm	(i.e., 1725&1450)
Amp	(i.e., 5.0/2.5&6.0/3.0)

NOTE—If spacing in standard location on nameplate is not adequate, the values of alternative frequency and associated volts, rpm and amps shall be permitted to be specified at a different location on the nameplate.

e. Dual Pole-Changing, Single Frequency and Single Voltage
Use slash between values of hp, rpm and amps.

Hp	(i.e., 1/4 / 1/12)
Rpm	(i.e., 1725/1140)
Amp	(i.e., 4.2/2.6)

NOTE—Horsepowers shall be permitted to be designated in decimals rather than fractions for clarity.

---

[1] This speed is the approximate rpm at rated load (see 10.32.1 and 10.32.2).

[2] This shall be permitted to be shown on a separate plate or decalcomania.

Copyright National Electrical Manufacturers Association
Provided by IHS under license with NEMA
No reproduction or networking permitted without license from IHS
Not for Resale

f. Single-Phase-Tapped Winding

Use marking for high speed connection only with designation for number of speeds following high speed rpm value and separated by a slash.

Rpm (i.e., 1725/5SPD)

10.39.6 Additional Nameplate Information ▲

Some examples of additional nameplate information

a. Enclosure or IP code
b. Manufacturer's name, mark, or logo
c. Manufacturer's plant location
d. Serial number or date of manufacture

10.40 NAMEPLATE MARKING FOR MEDIUM SINGLE-PHASE AND POLYPHASE INDUCTION MOTORS ▲

The following information shall be given on all nameplates of single-phase and polyphase induction motors. For motors with broad range or dual voltage, see 10.39.5. For abbreviations, see 1.80. For some examples of additional information that may be included on the nameplate, see 10.39.6.

10.40.1 Medium Single-Phase and Polyphase Squirrel-Cage Motors[1] ▲

a. Manufacturer's type and frame designation
b. Horsepower output
c. Time rating (see 10.36)
d. Maximum ambient temperature for which motor is designed (see Note 1 of 12.43)[2]
e. Insulation system designation (If stator and rotor use different classes of insulation systems, both insulation system designations shall be given on the nameplate, that for the stator being given first.)
f. Rpm at rated load
g. Frequency[3]
h. Number of phases
i. Rated-load amperes
j. Voltage
k. Code letter for locked-rotor kVA (see 10.37)
l. Design letter for medium motors (see 1.17 and 1.18.)
m. NEMA nominal efficiency when required by 12.58
n. Service factor if other than 1.0
o. Service factor amps when service factor exceeds 1.15.
p. For motors equipped with thermal protectors, the words "thermally protected" if the motor provides all the protection described in 12.56 (see 1.71 and 1.72)[4]
q. For motors rated above 1 horsepower equipped with over-temperature devices or systems, the words "OVER TEMP PROT-" followed by a type number as described in 12.57)

10.40.2 Polyphase Wound-Rotor Motors

a. Manufacturer's type and frame designation
b. Horsepower output
c. Time rating (see 10.36)
d. Maximum ambient temperature for which motor is designed (see Note 1 of 12.43)[5]
e. Insulation system designation (If stator and rotor use different classes of insulation systems, both insulation system designations shall be given on the nameplate, that for the stator being given first.)
f. Rpm at rated load
g. Frequency[6]
h. Number of phases
i. Rated-load amperes
j. Voltage
k. Secondary amperes at full load
l. Secondary voltage

---

[1] When air flow is required over the motor from the driven equipment in order to have the motor conform to temperature rise standards, "air over" shall appear on the nameplate. When the heat dissipating characteristics of the driven equipment, other than air flow, are required in order to have the motor conform to temperature rise standards, "auxiliary cooling" shall appear on the nameplate.

[2] As an alternative to items d and e, the temperature rise by resistance as shown in 12.43 shall be permitted to be given.

[3] If two frequencies are stamped on the nameplate, the data covered by items b, c, d, f, i, j, and m, if different, shall be given for both frequencies.

[4] This shall be permitted to be shown on a separate plate or decalcomania.

[5] As an alternative to items d and e, the temperature rise by resistance as shown in 12.43 shall be permitted to be given.

[6] If two frequencies are stamped on the nameplate, the data covered by items b, c, d, f, i, j, and m, if different, shall be given for both frequencies.

Copyright National Electrical Manufacturers Association
Provided by IHS under license with NEMA
No reproduction or networking permitted without license from IHS
Not for Resale

Part 10

RATINGS—DC SMALL AND MEDIUM MOTORS

10.0 SCOPE

The standards in this Part 10 of Section II cover direct-current motors built in frames with continuous dripproof ratings, or equivalent capacities, up to and including 1.25 horsepower per rpm, open type.

10.60 BASIS OF RATING

10.60.1 Small Motors

The basis of rating for a direct-current small motor shall be a rated form factor.

If the direct current is low ripple, the form factor is 1.0. As the ripple increases, the form factor increases. A small motor is not intended to be used on a power supply that produces a form factor at the rated load in conjunction with the motor greater than the rated form factor of the motor.

10.60.2 Medium Motors

While direct-current medium motors may be used on various types of power supplies, the basis for demonstrating conformance of the motor with these standards shall be a test using a power supply described in 12.65.2. The power supply identification shall be indicated on the nameplate as an essential part of the motor rating in accordance with 10.66

It may not be practical to conduct tests on motors intended for use on power supplies other than those specified in 12.65.2. In such cases, the performance characteristics of a motor may be demonstrated by a test using the particular power supply or by a combination of tests on an available power supply and the calculation of the predicted performance of the motor from the test data.

10.61 POWER SUPPLY IDENTIFICATION FOR DIRECT-CURRENT MEDIUM MOTORS

10.61.1 When the test power supply used as the basis of rating for a direct-current medium motor is one of those described in 12.65.2, a single letter shall be used to identify the test power supply.

10.61.2 When a direct-current medium motor is intended to be used on a power supply other than those described in 12.65.2, it shall be identified as follows:

M/N F-V-H-L

Where:

M = a digit indicating total pulses per cycle
N = a digit indicating controlled pulses per cycle
F = free wheeling (this letter appears only if free wheeling is used)
V = three digits indicating nominal line-to-line alternating-current voltage to the rectifier
H = two digits indicating input frequency in hertz
L = one, two, or three digits indicating the series inductance in millihenries (may be zero) to be added externally to the motor armature circuit

If the input frequency is 60 hertz and no series inductance is added externally to the motor armature circuit, these quantities need not be indicated and shall be permitted to be omitted from the identification of the power supply. However, if one of these quantities is indicated, then both of them shall appear to avoid confusion.

EXAMPLE—"6/3 F–380–50–12" defines a power supply having six total pulses per cycle, three controlled pulses per cycle, with free wheeling, with 380 volts alternating-current input at 50 hertz input, and 12 millihenries of externally added series inductance to the motor armature circuit inductance.

10.62 HORSEPOWER, SPEED, AND VOLTAGE RATINGS

10.62.1 Direct-Current Small Motors

10.62.1.1 OPERATIONAL FROM LOW RIPPLE (1.0 FORM FACTOR) POWER SUPPLIES

The horsepower and speed ratings for direct-current small constant-speed motors rated 115 and 230 volts shall be:

Hp	Approximate Full Load, Rpm			
1/20	3450	2500	1725	1140
1/12	3450	2500	1725	1140
1/8	3450	2500	1725	1140
1/6	3450	2500	1725	1140
1/4	3450	2500	1725	1140
1/3	3450	2500	1725	1140
1/2	3450	2500	1725	1140
3/4	3450	2500	1725	...
1	3450	2500	...	...

10.62.1.2 OPERATION FROM RECTIFIER POWER SUPPLIES

The horsepower, speed, voltage, and form factor ratings of direct-current small motors intended for use on adjustable-voltage rectifier power supplies shall be as shown in Table 10-7.

Copyright National Electrical Manufacturers Association
Provided by IHS under license with NEMA
No reproduction or networking permitted without license from IHS
Not for Resale

Table 10-7
MOTOR RATINGS FOR OPERATION FROM RECTIFIED POWER SUPPLIES

Hp	Approximate Rate-Load Speed, Rpm				Rated Voltages, Average Direct-Current Values		Rated Form Factor
					Armature Voltages	Field Voltages	
Single-Phase Primary Power Source							
1/20	3450	2500	1725	1140	75 volts 90 volts 150 volts	50 or 100 volts 50 or 100 volts 100 volts	See Notes 1 and 2
1/15	3450	2500	1725	1140			
1/12	3450	2500	1725	1140			
1/8	3450	2500	1725	1140			
1/6	3450	2500	1725	1140			
1/4	3450	2500	1725	1140			
1/3	3450	2500	1725	1140			
1/2	3450	2500	1725	1140			
3/4	3450	2500	1725	...	90 volts	50 or 100 volts	
1	3450	2500	...	...	180 volts	100 or 200 volts	
Three-Phase Primary Power Source							
1/4	3450	2500	1725	1140	240 volts	100, 150, 240 volts	See Notes 1 and 2
1/3	3450	2500	1725	1140			
1/2	3450	2500	1725	1140			
3/4	3450	2500	1725	...			
1	3450	2500	...	...			

NOTES
1—The rated form factor of a direct-current motor is the armature current form factor at rated load and rated speed and is an essential part of the motor rating.
2—The rated form factor of a direct-current motor is determined by the motor manufacturer; see 14.60. Recommended rated form factors are given in Table 14-2 of 14.60.
*Motors rated 1/20 to 1 horsepower, inclusive, are not suitable for speed control by field weakening.

10.62.2 Industrial Direct-Current Motors

The horsepower, voltage, and base speeds for industrial direct-current motors shall be in accordance with Tables 10-8, 10-9, and 10-10. The speed obtained by field control of straight shunt-wound or stabilized shunt-wound industrial direct-current motors shall be as shown in the tables.

Table 10-8
HORSEPOWER, SPEED, AND VOLTAGE RATINGS FOR INDUSTRIAL DIRECT-CURRENT MOTORS—180 VOLTS ARMATURE VOLTAGE RATING*, POWER SUPPLY K

	Base Speed, Rpm					
	3500	2500	1750	1150	850	
Hp	Speed by Field Control, Rpm					Field Voltage, volts
1/2*	...	...	...	...	940	50, 100, or 200
3/4*	...	...	...	1380	940	
1*	...	...	2050	1380	940	
1½	3850	2750	2050	1380	940	100 or 200
2	3850	2750	2050	1380	940	
3	3850	2750	2050	1380	940	
5	3850	2750	2050	1380	940	
7½	3850	2750	2050	1380	940	

*For these ratings, the armature voltage rating shall be 90 or 180 volts.

10.63 NAMEPLATE TIME RATING

Direct-current motors shall have a continuous rating unless otherwise specified. When a short-time ratinig is used, it shall be for 5, 15, 30, or 60 minutes. All short-time ratings are based upon a corresponding short-time load test which shall commence only when the windings and other parts of the machine or within 5°C of the ambient temperature at the time of starting the test.

10.64 TIME RATING FOR INTERMITTENT, PERIODIC, AND VARYING DUTY

For application on intermittent, periodic, or varying duty, the time rating shall be continuous or short time, based on the thermal effects being as close as possible to those which will be encountered in actual service.

10.65 NAMEPLATE MAXIMUM AMBIENT TEMPERATURE AND INSULATION SYSTEM CLASS

Direct-current motors shall be rated on the basis of a maximum ambient temperature and the insulation system class.

The rated value of the maximum ambient temperature shall be 40°C unless otherwise specified, and the insulation system shall be Class A, B, F, or H. All such ratings are based upon a load test with temperature rise values (measured by either method when two methods are listed) not exceeding those shown for the designated class of insulation system in the appropriate temperature rise table in 12.66. Ratings of direct-current motors for any other value of maximum ambient temperature shall be based on temperature rise values as calculated in accordance with 12.66.

Copyright National Electrical Manufacturers Association
Provided by IHS under license with NEMA
No reproduction or networking permitted without license from IHS

Not for Resale

Table 10-9
HORSEPOWER, SPEED, AND VOLTAGE RATINGS FOR INDUSTRIAL DIRECT-CURRENT MOTORS—240 VOLTS ARMATURE VOLTAGE RATING, POWER SUPPLY A, C, D, OR E

	Base Speed, Rpm									
	3500	2500	1750	1150	850	650	500	400	300	Field Voltage
Hp	Speed by Field Control, Rpm									Volts
1/2	...	...	...	...	1700	...	...	...	...	100, 150, or 240
3/4	...	...	...	2000	1700	...	...	...	...	
1	...	...	2300	2000	1700	...	...	...	...	
1-1/2	3850	3000	2300	2000	1700	...	...	...	...	
2	3850	3000	2300	2000	1700	...	...	...	...	
3	3850	3000	2300	2000	1700	...	...	...	...	
5	3850	3000	2300	2000	1700	...	...	...	...	
7-1/2	...	3000	2300	2000	1700	1600	1500	1200	1200	
10	...	3000	2300	2000	1700	1600	1500	1200	1200	
15	...	3000	2300	2000	1700	1600	1500	1200	1200	
20	...	3000	2300	2000	1700	1600	1500	1200	1200	
25	...	3000	2300	2000	1700	1600	1500	1200	1200	
30	...	3000	2300	2000	1700	1600	1500	1200	1200	
40	...	3000	2100	2000	1700	1600	1500	1200	1200	
50	...	...	2100	2000	1700	1600	1500	1200	1200	
60	...	...	2100	2000	1700	1600	1500	1200	1200	150 or 240
75	...	...	2100	2000	1700	1600	1500	1200	1200	
100	...	...	2000	2000	1700	1600	1500	1200	1200	
125	...	...	2000	2000	1700	1600	1500	1200	1200	
150	...	...	2000	2000	1700	1600	1500	1200	1100	
200	...	...	1900	1800	1700	1600	1500	1200	1100	
250	...	...	1900	1700	1600	...	...	...	...	

Table 10-10
HORSEPOWER, SPEED, AND VOLTAGE RATINGS FOR INDUSTRIAL DIRECT-CURRENT MOTORS—500 OR 550* VOLTS ARMATURE VOLTAGE RATING, POWER SUPPLY A, C, OR D

	Base Speed, Rpm								
	2500	1750	1150	850	650	500	400	300	Field Voltage
Hp	Speed by Field Control, Rpm								Volts
7-1/2	3000	2300	2000	1700	...	...	...	...	240 or 300
10	3000	2300	2000	1700	...	...	...	...	
15	3000	2300	2000	1700	...	...	...	...	
20	3000	2300	2000	1700	...	...	...	...	
25	3000	2300	2000	1700	...	...	...	...	
30	3000	2300	2000	1700	...	...	...	...	
40	3000	2100	2000	1700	...	...	...	...	
50	...	2100	2000	1700	1600	1500	1200	1200	
60	...	2100	2000	1700	1600	1500	1200	1200	
75	...	2100	2000	1700	1600	1500	1200	1200	
100	...	2000	2000	1700	1600	1500	1200	1200	
125	...	2000	2000	1700	1600	1500	1200	1200	
150	...	2000	2000	1700	1600	1500	1200	1100	
200	...	1900	1800	1700	1600	1500	1200	1100	
250	...	1900	1700	1600	1600	1400	1200	1100	
300	...	1900	1600	1500	1500	1300	1200	1000	
400	...	1900	1500	1500	1400	1300	1200	...	
500	...	1900	1500	1400	1400	1250	1100	...	
600	...	...	1500	1300	1300	1200	...	...	
700	...	...	1300	1300	1250	...	...	...	
800	...	...	1250	1250	1200	...	...	...	
900	...	...	1250	1200	...	...	...	...	
1000	...	...	1250	1200	...	...	...	...	

*550 Volts is an alternate voltage rating.

Copyright National Electrical Manufacturers Association
Provided by IHS under license with NEMA
No reproduction or networking permitted without license from IHS

Not for Resale

10.66 NAMEPLATE MARKING

The following minimum amount of information shall be given on all nameplates. For abbreviations, see 1.80.

10.66.1 Small Motors Rated 1/20 Horsepower and Less

a. Manufacturer's type designation
b. Power output (millihorsepower - mhp)
c. Full-load speed (see 10.62.1)
d. Voltage rating
e. The words "thermally protected"[1] for motors equipped with a thermal protector. (See 1.71 and 1.72.) (For their own convenience, motor manufacturers shall be permitted to use letters, but not numbers, preceding or following the words "thermally protected" for other identification purposes.)
f. The words "impedance protected" for motors with sufficient impedance within the motors so that they are protected from dangerous overheating due to overload or failure to start[1]

10.66.2 Small Motors Except Those Rated 1/20 Horsepower and Less

a. Manufacturer's type designation
b. Horsepower output at rated speed
c. Time rating at rated speed
d. Maximum ambient temperature for which motor is designed[2]
e. Insulation system designation. (If field and armature use different classes of insulation systems, both insulation system designations shall be given on the nameplate, that for the field being given first.)[2]
f. Speed in rpm
g. Rated armature voltage[3]
h. Rated field voltage (PM for permanent magnet motors)[3, 4, 5]
i. Armature rated-load amperes at rated speed[3]
j. Rated form factor when operated from rectifier power supply (see Table 10-7, Notes 1 and 2.)
k. The words "thermally protected"[1] for motors equipped with a thermal protector (See 1.71 and 1.72.)

10.66.3 Medium Motors

a. Manufacturer's type and frame designation
b. Horsepower or kW output at base speed
c. Time rating at rated speed
d. Maximum safe rpm for all series-wound motors and for those compound-wound motors whose variation in speed from rated load to no-load exceeds 35 percent with the windings at the constant temperature attained when operating at its rating
e. Maximum ambient temperature for which the motor is designed[2]
f. Insulation system designation (If field and armature use different classes of insulation systems, both insulation systems shall be given, that for the field being given first.)[2]
g. Base speed at rated load[6]
h. Rated armature voltage[3]
i. Rated field voltage (not applicable for permanent magnet motors)[3, 7, 5]
j. Armature rated-load current in amperes at base speed[3]
k. Power supply indentification in accordance with 10.61
l. Winding—straight shunt, stabilized shunt, compound, series, or permanent magnet
m. Direct current or dc
n. (Optional) Enclosure or IP code (see Part 5)
o. (Optional) Manufacturer's name, mark, or logo
p. (Optional) Manufacturer's plant location
q. (Optional) Serial number or date of manufacture
r. (Optional) Model number or catalog number

---

[1] These words shall be permitted to be shown on a separate plate or decalcomania.

[2] As an alternative, these items shall be permitted to be replaced by a single item reading "Rated temperature rise."

[3] These are average direct-current quantities.

[4] As an alternative, this item shall be permitted to be replaced by the following
a. Field resistance in ohms at 25°C.
b. Rated field current in amperes at rated speed.

[5] For separately excited, series-parallel, dual voltage windings, the two values of rated voltage shall both be shown. If a single value of current and resistance is shown, the data applies to the high voltage connection. If values of current and resistance for each voltage is shown, the voltage connection for which this data applies shall be indicated as well. A slash is permitted to indicate dual voltage and currents and they be respectively high volt/low volt, high current/low current.

[6] A single speed shown on the nameplate is the base speed. Two speeds shown on the nameplate indicate the range of speed obtained by field control unless a dual armature voltage marking is shown.

[7] As an alternative, this item shall be permitted to be replaced by the following
a. Field resistance in ohms at 25°C.
b. Rated field current in amperes. A single value of field current corresponds to the base speed. Two values correspond to the base speed and the highest speed obtained by field control.

Copyright National Electrical Manufacturers Association
Provided by IHS under license with NEMA
No reproduction or networking permitted without license from IHS
Not for Resale

Section II

SMALL (FRACTIONAL) AND MEDIUM (INTEGRAL) MACHINES

Part 11

DIMENSIONS—AC AND DC SMALL AND MEDIUM MACHINES

11.0 SCOPE

The standards in this Part 11 of Section II cover the following machines.

a. Alternating-Current Machines

Alternating-current machines up to and including the ratings built in frames corresponding to the continuous open-type ratings given in the table below.

Synchronous Speed	Motors Squirrel-Cage and Wound Rotor, Hp	Motors, Synchronous, Hp — Power Factor		Generators, Synchronous Revolving Field Type, kW at 0.8 Power Factor
		Unity	0.8	
3600	500	500	400	400
1800	500	500	400	400
1200	350	350	300	300
900	250	250	200	200
720	200	200	150	150
600	150	150	125	125
514	125	125	100	100

b. Direct-Current Machines

Direct-current machines built in frames with continuous dripproof ratings, or equivalent capacities, up to and including:

motors: 1.25 horsepower per rpm, open type
generators: 1.0 kilowatt per rpm, open type

11.01 SYSTEM FOR DESIGNATING FRAMES

The system for designating frames of motors and generators shall consist of a series of numbers in combination with letters, defined as follows:

11.01.1 Small Machines

The frame number for small machines shall be the D dimension in inches multiplied by 16.

The letters B, C, G, H, J, K, M, N, Y, and Z shall immediately follow the frame number to denote variations as follows:

B—Carbonator pump motors (see 18.726–18.739)
C—Type C face-mounting (see 11.34 and 11.63)
G—Gasoline pump motors (see 18.266–18.251)
H—Indicates a frame having an F dimension larger than that of the same frame without the suffix letter H (see 11.31 and 11.61)
J—Jet pump motors (see 18.326–18.341)
K—Sump pump motors (see 18.226–18.240)
M—Oil burner motors (see 18.276–18.290)
N—Oil burner motors (see 18.276–18.290)
Y—Special mounting dimensions (dimensional diagram must be obtained from the manufacturer)
Z—All mounting dimensions are standard except the shaft extension

NOTE—The letters S, T, U, V, W, and X are reserved for possible future use. For their own convenience, manufacturers may use any letter in the alphabet preceding the frame number, but such a letter will have no reference to standard mounting dimensions.

11.01.2 Medium Machines

The system for numbering the frames of medium machines shall be as follows.

a. The first two digits of the frame number are equal to four times the D dimension in inches. When this product is not a whole number, the first two digits of the frame number shall be the next higher whole number. See Table 11-1.
b. The third and, when required, the fourth digit of the frame number is obtained from the value of 2F in inches by referring to the columns headed 1 to 15, inclusive, in Table 11-1.

The letters A, C, CH, D, E, Hp, HpH, JM, JP, LP, LPH, P, PH, R, S, T, U, V, VP, X, Y, or Z shall immediately follow the frame number to denote variations as follows.

A—Industrial direct-current machine.
C—Type C face-mounting on drive end.[1]
CH—Type C face-mounting dimensions are different from those for the frame designation having the suffix letter C. (The letters CH are to be considered as one suffix and shall not be separated.)
D—Type D flange-mounting on drive end.[2]
E—Shaft extension dimensions for elevator motors in frames larger than the 326U frame.

[1] When the face mounting is at the end opposite the drive, the prefix F shall be used, making the suffix letters FC.

[2] When the flange mounting is at the end opposite the drive, the prefix F shall be used, making the suffix letters FD.

Copyright National Electrical Manufacturers Association
Provided by IHS under license with NEMA
No reproduction or networking permitted without license from IHS
Not for Resale

Table 11-1
MEDIUM MACHINE FRAME NUMBERING

Frame Number Series	D	Third/Fourth Digit in Frame Number						
		1	2	3	4	5	6	7
		2F Dimensions						
140	3.50	3.00	3.50	4.00	4.50	5.00	5.50	6.25
160	4.00	3.50	4.00	4.50	5.00	5.50	6.25	7.00
180	4.50	4.00	4.50	5.00	5.50	6.25	7.00	8.00
200	5.00	4.50	5.00	5.50	6.50	7.00	8.00	9.00
210	5.25	4.50	5.00	5.50	6.25	7.00	8.00	9.00
220	5.50	5.00	5.50	6.25	6.75	7.50	9.00	10.00
250	6.25	5.50	6.25	7.00	8.25	9.00	10.00	11.00
280	7.00	6.25	7.00	8.00	9.50	10.00	11.00	12.50
320	8.00	7.00	8.00	9.00	10.50	11.00	12.00	14.00
360	9.00	8.00	9.00	10.00	11.25	12.25	14.00	16.00
400	10.00	9.00	10.00	11.00	12.25	13.75	16.00	18.00
440	11.00	10.00	11.00	12.50	14.50	16.50	18.00	20.00
500	12.50	11.00	12.50	14.00	16.00	18.00	20.00	22.00
580	14.50	12.50	14.00	16.00	18.00	20.00	22.00	25.00
680	17.00	16.00	18.00	20.00	22.00	25.00	28.00	32.00

Frame Number Series	D	Third/Fourth Digit in Frame Number							
		8	9	10	11	12	13	14	15
		2F Dimensions							
140	3.50	7.00	8.00	9.00	10.00	11.00	12.50	14.00	16.00
160	4.00	8.00	9.00	10.00	11.00	12.50	14.00	16.00	18.00
180	4.50	9.00	10.00	11.00	12.50	14.00	16.00	18.00	20.00
200	5.00	10.00	11.00	...	...	...	...	...	...
210	5.25	10.00	11.00	12.50	14.00	16.00	18.00	20.00	22.00
220	5.50	11.00	12.50	...	...	...	...	...	...
250	6.25	12.50	14.00	16.00	18.00	20.00	22.00	25.00	28.00
280	7.00	14.00	16.00	18.00	20.00	22.00	25.00	28.00	32.00
320	8.00	16.00	18.00	20.00	22.00	25.00	28.00	32.00	36.00
360	9.00	18.00	20.00	22.00	25.00	28.00	32.00	36.00	40.00
400	10.00	20.00	22.00	25.00	28.00	32.00	36.00	40.00	45.00
440	11.00	22.00	25.00	28.00	32.00	36.00	40.00	45.00	50.00
500	12.50	25.00	28.00	32.00	36.00	40.00	45.00	50.00	56.00
580	14.50	28.00	32.00	36.00	40.00	45.00	50.00	56.00	63.00
680	17.00	36.00	40.00	45.00	50.00	56.00	63.00	71.00	80.00

All dimensions in inches.

Hp and HpH—Type P flange-mounting vertical solid shaft motors having dimensions in accordance with 18.625. (The letters Hp and HpH are to be considered as one suffix and shall not be separated.)

JM—Type C face-mounting close-coupled pump motor having antifriction bearings and dimensions in accordance with Table 1 of 18.614. (The letters JM are to be considered as one suffix and shall not be separated.)

JP—Type C face-mounting close-coupled pump motor having antifriction bearings and dimensions in accordance with Table 2 of 18.614. (The letters JP are to be considered as one suffix and shall not be separated.)

LP and LPH—Type P flange-mounting vertical solid shaft motors having dimensions in accordance with 18.620. (The letters LP and LPH are to be considered as one suffix and shall not be separated.)

P and PH—Type P flange-mounting vertical hollow shaft motors having dimensions in accordance with 18.591.

R—Drive end tapered shaft extension having dimensions in accordance with 11.32.

S—Standard short shaft for direct connection (see dimension tables).

Copyright National Electrical Manufacturers Association
Provided by IHS under license with NEMA
No reproduction or networking permitted without license from IHS
Not for Resale

T—Included as part of a frame designation for which standard dimensions have been established (see dimension tables).

U—Previously used as part of a frame designation for which standard dimensions had been established (no longer included in this publication).

V—Vertical mounting only.

VP—Type P flange-mounting vertical solid-shaft motors having dimensions in accordance with 18.590. (The letters VP are to be considered as one suffix and shall not be separated.)

NOTE—The letter W is reserved for possible future use. For their own convenience, manufacturers may use any letter in the alphabet preceding the frame number, but such a letter will have no reference to standard mounting dimensions.

X—Wound-rotor crane motors with double shaft extension (see 18.506 and 18.520.)

Y—Special mounting dimensions (dimensional diagram must be obtained from the manufacturer.)

Z—All mounting dimensions are standard except the shaft extension (s). Also used to designate machine with double shaft extension.

Suffix letters shall be added to the frame number in the following sequence:

Suffix Letters	Sequence
A	1
T, U, Hp, HpM, JM, JP, LP, LPH, and VP	2
R and S	3
C, D, P, and PH	4
FC, FD	5
V	6
E, X, Y, Z	7

11.02 LETTERING OF DIMENSION SHEETS

See 4.01.

11.03 MOTOR MOUNTING AND TERMINAL HOUSING LOCATION

See 4.02.

11.04 SYMBOLS FOR MACHINE MOUNTING ASSEMBLIES

See 4.03.

11.05 TERMINAL CONNECTIONS FOR SMALL MOTORS

11.05.1 Terminal Leads

The terminal leads of small motors shall be brought: (1) out of the end shield at the end opposite the drive end and at the right-hand side when viewing this end; or (2) out of the frame at the right-hand side when viewing the end opposite the drive and as close to this end as is practicable.

11.05.2 Blade Terminals

Except where other dimensions for blade terminals are specified in Part 18, blade terminals when used for external connection small motors shall have the following dimensions.

Frame Size	Width, Inches	Thickness, Inches
48 and larger	0.250	0.031
Smaller than 48	0.187	0.020

11.06 MOTOR TERMINAL HOUSING

11.06.1 Strength

Terminal housings shall be of metal and of substantial construction. For motors over 7 inches in diameter, the terminal housings shall be capable of withstanding without failure a vertical loading on the horizontal suraces of 20 pounds per square inch of horizontal surface up to a maximum of 240 pounds. This load shall be applied through a 2-inch-diameter flat metal surface. Bending or deforming of the housing shall not be considered a failure unless it results in spacings between the housing and any rigidly mounted live terminals less than those given in 11.06.2.2.

In other than hazardous (classified) locations, substantial, non-metallic, non-burning[1] terminal housings shall be permitted to be used on motors and generators provided internal grounding means between the machine frame and the equipment grounding connection is incorporated into the housing.

11.06.2 Dimensions

11.06.2.1 When these terminal housings enclose wire-to-wire connections, they shall have minimum dimensions and usable volumes in accordance with the following. Auxiliary leads for such items as brakes, thermostats, space heaters, exciting fields, etc., shall be permitted to be disregarded if their current-carrying area does not exceed

[1] See American Society for Testing and Materials "Test for Flammibility of Self-Supporting Plastics," ASTM D635-81, over 0.050 inch (0.127 cm) in thickness, for the non-burning test.

Copyright National Electrical Manufacturers Association
Provided by IHS under license with NEMA
No reproduction or networking permitted without license from IHS
Not for Resale

25 percent of the current-carrying area of the machine power leads.

MOTORS 11 INCHES IN DIAMETER* OR LESS

Hp	Cover Opening, Minimum Dimensions Inches	Useable Volume Minimum, Cubic Inches
1 and smaller**	1.62	7.50
1½, 2, and 3†	1.75	12.00
5 and 7½	2.00	16.00
10 and 15	2.50	26.00

*This is a diameter measured in the plane of lamination of the circle circumscribing the stator frame, excluding lugs, fins, boxes, etc., used solely for motor cooling, mounting, assembly, or connection.

**For motors rated 1 horsepower and smaller and with the terminal housing partially or wholly integral with the frame or end shield, the volume of the terminal housing shall be not less than 0.8 cubic inch per wire-to-wire connection. The minimum cover opening dimension is not specified.

†For motors rated 1-1/2, 2, and 3 horsepower and with the terminal housing partially or wholly integral with the frame or end shield, the volume of the terminal housing shall be not less than 1.0 cubic inch per wire-to-wire connection. The minimum cover opening dimension is not specified.

MOTORS OVER 11 INCHES IN DIAMETER*

Alternating-current Motors

Maximum Full-Load Current for Three-Phase Motors with Maximum of Twelve Leads, Amperes	Terminal Housing Minimum Dimension, Inches	Usable Volume, Minimum, Cubic Inches	Typical Maximum Three Phase Horsepower 230 Volts	460 Volts
45	2.5	26	15	30
70	3.3	55	25	50
110	4.0	100	40	75
160	5.0	180	60	125
250	6.0	330	100	200
400	7.0	600	150	300
600	8.0	1100	250	500

Direct-current Motors

Maximum Full-Load Current for Motors with Maximum of Six Leads,	Terminal Housing Minimum Dimension, Inches	Usable Volume, Minimum, Cubic Inches
68	2.5	26
105	3.3	55
165	4.0	100
240	5.0	180
375	6.0	330
600	7.0	600
900	8.0	1100

*This is a diameter measured in the plane of lamination of the circle circumscribing the stator frame, excluding lugs, fins, boxes, etc., used solely for motor cooling, mounting, assembly, or connection.

11.06.2.2 When these terminal housings enclose rigidly-mounted motor terminals, the terminal housings shall be of sufficient size to provide minimum terminal spacings and usable volumes in accordance with the following.

TERMINAL SPACINGS

Volts	Minimum Spacing, Inches: Between Line Terminals	Between Line Terminals and Other Uninsulated Metal Parts
250 or less	0.25	0.25
251–600, incl.	0.38	0.38

USABLE VOLUMES

Power Supply Conductor Size, AWG	Minimum Usable Volume per Power Supply Conductor, Cubic Inches
14	1.0
12 and 10	1.25
8 and 6	2.25

For larger wire sizes or when motors are installed as a part of factory-wired equipment, without additional connection being required at the motor terminal housing during equipment installation, the terminal housing shall be of ample size to make connections, but the foregoing provisions for the volumes of terminal housings need not apply.

11.06.3 Grounding Means for Field Wiring

When motors are provided with terminal housings for wire-to-wire connections or fixed terminal connections, a means for attachment of an equipment grounding conductor termination shall be provided inside, or adjacent with accessibility from, the terminal housing. Unless its intended use is obvious, it shall be suitably identified. The termination shall be suitable for the attachment and equivalent fault current ampacity of a copper grounding conductor as shown in Table 11-2. A screw, stud, or bolt intended for the termination of a grounding conductor shall be not smaller than shown in Table 11-2. For motor full-load currents in excess of 30 amperes ac or 45 amperes dc, external tooth lockwashers, serrated screw heads, or the equivalent shall not be furnished for a screw, bolt, or stud intended as a grounding conductor termination.

When a motor is provided with a grounding terminal, this terminal shall be the solderless type and shall be on a part of the machine not normally disassembled during operation or servicing.

When a terminal housing mounting screw, stud, or bolt is used to secure the grounding conductor to the main terminal housing, there shall be at least one other equivalent securing means for attachment of the terminal housing to the machine frame.

Copyright National Electrical Manufacturers Association
Provided by IHS under license with NEMA
No reproduction or networking permitted without license from IHS

Not for Resale

11.07 KNOCKOUT AND CLEARANCE HOLE DIAMETERS FOR MACHINE TERMINAL BOXES

See 4.04.

11.08 TOLERANCES ON SHAFT EXTENSION DIAMETERS AND KEYSEATS

See 14.05.

11.09 METHOD OF MEASUREMENT OF SHAFT RUNOUT AND OF ECCENTRICITY AND FACE RUNOUT OF MOUNTING SURFACES

See 4.07.

11.10 TOLERANCES FOR TYPE C FACE-MOUNTING AND TYPE D FLANGE-MOUNTING MOTORS

See 4.08.

Table 11-2
MINIMUM SIZE GROUNDING CONDUCTOR TERMINATION

Motor Full Load Current ≤		Maximum Size of Grounding Conductor Termination Attachment Means, AWG	Minimum Size of Screw, Stud, or Bolt	
ac	dc		Steel	Bronze
12	12	14	#6	...
16	16	12	#8	...
30	40	10	#10	...
45	68	8	#12	#10
70	105	6	5/16″	#12
110	165	4	5/16″	5/16″
160	240	3	3/8″	5/16″
250	375	1	1/2″	3/8″
400	600	2/0	...	1/2″
600	900	3/0	...	1/2″

Copyright National Electrical Manufacturers Association
Provided by IHS under license with NEMA
No reproduction or networking permitted without license from IHS

Not for Resale

Copyright National Electrical Manufacturers Association
Provided by IHS under license with NEMA
No reproduction or networking permitted without license from IHS

Not for Resale

Section II

SMALL (FRACTIONAL) AND MEDIUM (INTEGRAL) MACHINES

Part 11

DIMENSIONS—AC SMALL AND MEDIUM MACHINES

11.0 SCOPE

The standards in this Part 11 of Section II cover alternating-current machines up to and including the ratings built in frames corresponding to the continuous open-type ratings given in the table below.

Synchronous Speed	Motors Squirrel-Cage and Wound Rotor, Hp	Motors, Synchronous, Hp — Power Factor		Generators, Synchronous Revolving Field Type, kW at 0.8 Power Factor
		Unity	0.8	
3600	500	500	400	400
1800	500	500	400	400
1200	350	350	300	300
900	250	250	200	200
720	200	200	150	150
600	150	150	125	125
514	125	125	100	100

11.30 SHAFT EXTENSION DIAMETERS FOR UNIVERSAL MOTORS

The shaft extension diameters,[1] in inches shall be:

0.2500	0.3750	0.6250
0.3125	0.5000	0.7500

[1] For tolerances on shaft extension diameters and keyseats, see 4.05.

Copyright National Electrical Manufacturers Association
Provided by IHS under license with NEMA
No reproduction or networking permitted without license from IHS

Not for Resale

Copyright National Electrical Manufacturers Association
Provided by IHS under license with NEMA
No reproduction or networking permitted without license from IHS
Not for Resale

11.31 DIMENSIONS FOR ALTERNATING-CURRENT FOOT-MOUNTED MACHINES WITH SINGLE STRAIGHT-SHAFT EXTENSION[1,2]

Frame Designation	A Max	D*	E†	2F†	BA	H†	U	N-W	V Min	Keyseat R	Keyseat ES Min	Keyseat S	AA Min††
42	...	2.62	1.75	1.69	2.06	0.28 slot	0.3750	1.12	...	0.328	...	flat	...
48	...	3.00	2.12	2.75	2.50	0.34 slot	0.5000	1.50	...	0.453	...	flat	...
48H	...	3.00	2.12	4.75	2.50	0.34 slot	0.5000	1.50	...	0.453	...	flat	...
56	...	3.50	2.44	3.00	2.75	0.34 slot	0.6250	1.88	...	0.517	1.41	0.188	...
56H	...	3.50	2.44	5.00	2.75	0.34 slot	0.6250	1.88	...	0.517	1.41	0.188	...
143T	7.0	3.50	2.75	4.00	2.25	0.34 hole	0.8750	2.25	2.00	0.771	1.41	0.188	3/4
145T	7.0	3.50	2.75	5.00	2.25	0.34 hole	0.8750	2.25	2.00	0.771	1.41	0.188	3/4
182T	9.0	4.50	3.75	4.50	2.75	0.41 hole	1.1250	2.75	2.50	0.986	1.78	0.250	3/4
184T	9.0	4.50	3.75	5.50	2.75	0.41 hole	1.1250	2.75	2.50	0.986	1.78	0.250	3/4
213T	10.5	5.25	4.25	5.50	3.50	0.41 hole	1.3750	3.38	3.12	1.201	2.41	0.312	1
215T	10.5	5.25	4.25	7.00	3.50	0.41 hole	1.3750	3.38	3.12	1.201	2.41	0.312	1
254T	12.5	6.25	5.00	8.25	4.25	0.53 hole	1.625	4.00	3.75	1.416	2.91	0.375	1-1/4
256T	12.5	6.25	5.00	10.00	4.25	0.53 hole	1.625	4.00	3.75	1.416	2.91	0.375	1-1/4
284T	14.0	7.00	5.50	9.50	4.75	0.53 hole	1.875	4.62	4.38	1.591	3.28	0.500	1-1/2
284TS	14.0	7.00	5.50	9.50	4.75	0.53 hole	1.625	3.25	3.00	1.416	1.91	0.375	1-1/2
286T	14.0	7.00	5.50	11.00	4.75	0.53 hole	1.875	4.62	4.38	1.591	3.28	0.500	1-1/2
286TS	14.0	7.00	5.50	11.00	4.75	0.53 hole	1.625	3.25	3.00	1.416	1.91	0.375	1-1/2
324T	16.0	8.00	6.25	10.50	5.25	0.66 hole	2.125	5.25	5.00	1.845	3.91	0.500	2
324TS	16.0	8.00	6.25	10.50	5.25	0.66 hole	1.875	3.75	3.50	1.591	2.03	0.500	2
326T	16.0	8.00	6.25	12.00	5.25	0.66 hole	2.125	5.25	5.00	1.845	3.91	0.500	2
326TS	16.0	8.00	6.25	12.00	5.25	0.66 hole	1.875	3.75	3.50	1.591	2.03	0.500	2
364T	18.0	9.00	7.00	11.25	5.88	0.66 hole	2.375	5.88	5.62	2.021	4.28	0.625	3
364TS	18.0	9.00	7.00	11.25	5.88	0.66 hole	1.875	3.75	3.50	1.591	2.03	0.500	3
365T	18.0	9.00	7.00	12.25	5.88	0.66 hole	2.375	5.88	5.62	2.021	4.28	0.625	3
365TS	18.0	9.00	7.00	12.25	5.88	0.66 hole	1.875	3.75	3.50	1.591	2.03	0.500	3
404T	20.0	10.00	8.00	12.25	6.62	0.81 hole	2.875	7.25	7.00	2.450	5.65	0.750	3
404TS	20.0	10.00	8.00	12.25	6.62	0.81 hole	2.125	4.25	4.00	1.845	2.78	0.500	3
405T	20.0	10.00	8.00	13.75	6.62	0.81 hole	2.875	7.25	7.00	2.450	5.65	0.750	3
405TS	20.0	10.00	8.00	13.75	6.62	0.81 hole	2.125	4.25	4.00	1.845	2.78	0.500	3
444T	22.0	11.00	9.00	14.50	7.50	0.81 hole	3.375	8.50	8.25	2.880	6.91	0.875	3
444TS	22.0	11.00	9.00	14.50	7.50	0.81 hole	2.375	4.75	4.50	2.021	3.03	0.625	3
445T	22.0	11.00	9.00	16.50	7.50	0.81 hole	3.375	8.50	8.25	2.880	6.91	0.875	3
445TS	22.0	11.00	9.00	16.50	7.50	0.81 hole	2.375	4.75	4.50	2.021	3.03	0.625	3
447T	22.0	11.00	9.00	20.00	7.50	0.81 hole	3.375	8.50	8.25	2.880	6.91	0.875	3
447TS	22.0	11.00	9.00	20.00	7.50	0.81 hole	2.375	4.75	4.50	2.021	3.03	0.625	3
449T	22.0	11.00	9.00	25.00	7.50	0.81 hole	3.375	8.50	8 .25	2.880	6.91	0.875	3
449TS	22.0	11.00	9.00	25.00	7.50	0.81 hole	2.375	4.75	4.50	2.021	3.03	0.625	3
440	...	11.00	9.00	**	7.50	...	...	...	...	...	...	...	
500	...	12.50	10.00	**	8.50	...	...	...	...	...	...	...	

All dimensions in inches.

*The tolerance on the D dimension for rigid base motors shall be +0.00 inch, -0.06 inch. No tolerance has been established for the D dimension of resilient mounted motors.

†Frames 42 to 56H, inclusive—The tolerance for the 2F dimension shall be ±0.03 inch and for the H dimension (width of slot) shall be +0.02 inch, -0 inch.

Frames 143T to 500, inclusive—The tolerance for the 2E and 2F dimensions shall be ±0.03 inch and for the H dimensions shall be +0.05 inch, -0 inch.

††For dimensions of clearance holes, see 4.04.

**For the 2F dimension and corresponding third (and when required the fourth) digit in the frame series, see 11.01.1 and Table 11-1.

NOTES

1—It is recommended that all machines with keyseats cut in the shaft extension for pulley, coupling, pinion, and so forth, be furnished with a key unless otherwise specified by the purchaser.

2—Frames 42 to 56H, inclusive,—If the shaft extension length of the motor is not suitable for the application, it is recommended that deviations from this length be in 0.25-inch increments.

[1]For the meaning of the letter dimensions, see 4.01 and Figures 4-1 and 4-2.

[2]For tolerances on shaft extension diameters and keyseats, see 4.05.

Copyright National Electrical Manufacturers Association
Provided by IHS under license with NEMA
No reproduction or networking permitted without license from IHS

11.32 SHAFT EXTENSIONS AND KEY DIMENSIONS FOR ALTERNATING-CURRENT FOOT-MOUNTED MACHINES WITH SINGLE TAPERED OR DOUBLE STRAIGHT/TAPERED SHAFT EXTENSION[1,2]

Frame Designation	Drive End—Tapered Shaft Extension*										
	BA	U	N-W	V	X	Y	Z Max	Shaft Threads	Keyseat Width	Keyseat Depth	Key Length**
143TR and 145TR	2.25	0.8750	2.62	1.75	1.88	0.75	1.38	5/8–18	0.188	0.094	1.50
182TR and 184TR	2.75	1.1250	3.38	2.25	2.38	0.88	1.50	3/4–16	0.250	0.125	2.00
213TR and 215TR	3.50	1.3750	4.12	2.62	2.75	1.25	2.00	1–14	0.312	0.156	2.38
254TR and 256TR	4.25	1.625	4.50	2.88	3.00	1.25	2.00	1–14	0.375	0.188	2.62
284TR and 286TR	4.75	1.875	4.75	3.12	3.25	1.25	2.38	1-1/4–12	0.500	0.250	2.88
324TR and 326TR	5.25	2.125	5.25	3.50	3.62	1.38	2.75	1-1/2–8	0.500	0.250	3.25
364TR and 365TR	5.88	2.375	5.75	3.75	3.88	1.50	3.25	1-3/4–8	0.625	0.312	3.50
404TR and 405TR	6.62	2.875	6.62	4.38	4.50	1.75	3.62	2–8	0.750	0.375	4.12
444TR and 445TR	7.50	3.375	7.50	5.00	5.12	2.00	4.12	2-1/4–8	0.875	0.438	4.75

Frame Number Series	Opposite Drive End—Tapered Shaft Extension*†									
	FU	FN-FW	FV	FX	FY	FZ Max	Shaft Threads	Keyseat Width	Keyseat Depth	Key Length
140	0.6250	2.00	1.38	1.50	0.50	1.12	3/8–24	0.188	0.094	1.12
180	0.8750	2.62	1.75	1.88	0.75	1.38	5/8–18	0.188	0.094	1.50
210	1.1250	3.38	2.25	2.38	0.88	1.50	3/4–16	0.250	0.125	2.00
250	1.3750	4.12	2.62	2.75	1.25	2.00	1–14	0.312	0.156	2.38
280	1.6250	4.50	2.88	3.00	1.25	2.00	1–14	0.375	0.188	2.62
320	1.8750	4.75	3.12	3.25	1.25	2.38	1-1/4–12	0.500	0.250	2.88
360	1.8750	4.75	3.12	3.25	1.25	2.38	1-1/4–12	0.500	0.250	2.88
400	2.1250	5.25	3.50	3.62	1.38	2.75	1-1/2–8	0.500	0.250	3.25
440	2.3750	5.75	3.75	3.88	1.50	3.25	1-3/4–8	0.625	0.312	3.50

(See next page for notes.)

(continued)

[1]For the meaning of the letter dimensions, see 4.01 and Figures 4-1 and 4-2.
[2]For tolerances on shaft extension diameters and keyseats, see 4.05.

Not for Resale

Copyright National Electrical Manufacturers Association
Provided by IHS under license with NEMA
No reproduction or networking permitted without license from IHS

11.32 *(continued)*

Frame Number Series	Opposite Drive End—Straight Shaft Extension†					
				Keyseat		
	FU	FN-FW	FV Min	R	ES Min	S
140	0.6250	1.62	1.38	0.517	0.91	0.188
180	0.8750	2.25	2.00	0.771	1.41	0.188
210	1.1250	2.75	2.50	0.986	1.78	0.250
250	1.3750	3.38	3.12	1.201	2.41	0.312
280	1.625	4.00	3.75	1.416	2.91	0.375
280 Short Shaft	1.625	3.25	3.00	1.416	1.91	0.375
320	1.875	4.62	4.38	1.591	3.28	0.500
320 Short Shaft	1.875	3.75	3.50	1.591	2.03	0.500
360	1.875	4.62	4.38	1.591	3.28	0.500
360 Short Shaft	1.875	3.75	3.50	1.591	2.03	0.500
400	2.125	5.25	5.00	1.845	3.91	0.500
400 Short Shaft	2.125	4.25	4.00	1.845	2.78	0.500
440	2.375	5.88	5.62	2.021	4.28	0.625
440 Short Shaft	2.375	4.75	4.50	2.021	3.03	0.625

All dimension in inches.
*The standard taper of shafts shall be at the rate of 1.25 inch in diameter per foot of length. The thread at the end of the tapered shaft shall be provided with a nut and a suitable locking device.
**Tolerance on the length of the key is ±0.03 inch.
†For drive applications other than direct connect, the motor manufacturer should be consulted.
NOTE—It is recommended that all machines with keyseats cut in the shaft extension for pulley, coupling, pinion, etc., be furnished with a key unless otherwise specified by the purchaser.

11.33 SHAFT EXTENSION DIAMETERS AND KEY DIMENSIONS FOR ALTERNATING-CURRENT MOTORS BUILT IN FRAMES LARGER THAN THE 445T FRAMES

The shaft extension diameters and key dimensions for alternating-current motors having ratings built in frames larger than the 445T frame up to and including the ratings built in frames corresponding to the continous open-type rating given in the title of this Part 11 shall be as shown in Table 4-2.

Not for Resale

Copyright National Electrical Manufacturers Association
Provided by IHS under license with NEMA
No reproduction or networking permitted without license from IHS
Not for Resale

11.34 DIMENSIONS FOR TYPE C FACE-MOUNTING FOOT OR FOOTLESS ALTERNATING-CURRENT MOTORS[1,2,3]

							BF Hole					Keyseat		
Frame Designation*	AJ**	AK	BA	BB Min	BC	BD Max	Number	Tap Size	Bolt Penetration Allowance	U	AH	R	ES Min	S
42C	3.750	3.000	2.062	0.16†	-0.19	5.00††	4	1/4–20	...	0.3750	1.312	0.328	...	flat
48C	3.750	3.000	2.50	0.16†	-0.19	5.625	4	1/4–20	...	0.500	1.69	0.453	...	flat
56C	5.875	4.500	2.75	0.16†	-0.19	6.50††	4	3/8–16	...	0.6250	2.06	0.517	1.41	0.188
143TC and 145TC	5.875	4.500	2.75	0.16†	+0.12	6.50††	4	3/8–16	0.56	0.8750	2.12	0.771	1.41	0.188
182TC and 184TC	7.250	8.500	3.50	0.25	+0.12	9.00	4	1/2–13	0.75	1.1250	2.62	0.986	1.78	0.250
182TCH and 184 TCH	5.875	4.500	3.50	0.16†	+0.12	6.50††	4	3/8–16	0.56	1.1250	2.62	0.986	1.78	0.250
213TC and 215TC	7.250	8.500	4.25	0.25	+0.25	9.00	4	1/2–13	0.75	1.3750	3.12	1.201	2.41	0.312
254TC and 256TC	7.250	8.500	4.75	0.25	+0.25	10.00	4	1/2–13	0.75	1.625	3.75	1.416	2.91	0.375
284TC and 286TC	9.000	10.500	4.75	0.25	+0.25	11.25	4	1/2–13	0.75	1.875	4.38	1.591	3.28	0.500
284TSC and 286TSC	9.000	10.500	4.75	0.25	+0.25	11.25	4	1/2–13	0.75	1.625	3.00	1.416	1.91	0.375
324TC and 326TC	11.000	12.500	5.25	0.25	+0.25	14.00	4	5/8–11	0.94	2.125	5.00	1.845	3.91	0.500
324TSC and 326TSC	11.000	12.500	5.25	0.25	+0.25	14.00	4	5/8–11	0.94	1.875	3.50	1.591	2.03	0.500
364TC and 365TC	11.000	12.500	5.88	0.25	+0.25	14.00	4	5/8–11	0.94	2.375	5.62	2.021	4.28	0.625
364TSC and 365TSC	11.000	12.500	5.88	0.25	+0.25	14.00	8	5/8–11	0.94	1.875	3.50	1.591	2.03	0.500
404TC and 405TC	11.000	12.500	6.62	0.25	+0.25	15.50	8	5/8–11	0.94	2.875	7.00	2.450	5.65	0.750
404TSC and 405TSC	11.000	12.500	6.62	0.25	+0.25	15.50	8	5/8–11	0.94	2.125	4.00	1.845	2.78	0.500
444TC and 445 TC	14.000	16.000	7.50	0.25	+0.25	18.00	8	5/8–11	0.94	3.375	8.25	2.880	6.91	0.875
444TSC and 445TSC	14.000	16.000	7.50	0.25	+0.25	18.00	8	5/8–11	0.94	2.375	4.50	2.021	3.03	0.625
447TC and 449TC	14.000	16.000	7.50	0.25	+0.25	18.00	8	5/8–11	0.94	3.375	8.25	2.880	6.91	0.875
447TSC amd 449TSC	14.000	16.000	7.50	0.25	+0.25	18.00	8	5/8–11	0.94	2.375	4.50	2.021	3.03	0.625
▲ 500 frame series	14.500	16.500	...	0.25	+0.25	18.00	4	5/8–11	0.94	...	...	...	...	...

All dimensions in inches.

*For frames 42C to 445TSC, see 11.31 for dimensions A, B, D, E, 2F, and H.

**For frames 182 TC, 184TC, and 213TC through 500TC, the centerline of the bolt holes shall be within 0.025 inch of true location. True location is defined as angular and diametrical location with reference to the centerline of the AK dimension.

†The tolerance on this BB dimension shall be +0.00 inch, -0.06 inch.

††These BD dimensions are nominal dimensions.

NOTES

1—It is recommended that all machines with keyseats cut in the shaft extension for pulley, coupling, pinion, etc., be furnished with a key unless otherwise specifed by the purchaser.

2—If the shaft extension length of the motor is not suitable for the applicaiton, it is recommended that deviations from this length be in 0.25-inch increments.

[1] For the meaning of the letter dimensions, see 4.01 and Figure 4-3.

[2] For tolerances on shaft extension diameters and keyseats, see 4.05

[3] For tolerances on AK dimensions, face runout, and permissible eccentricity of mounting rabbet, see 4.08.

NEMA MG1 93 6470247 0606766 633

11.35 DIMENSIONS FOR TYPE FC FACE MOUNTING FOR ACCESSORIES ON END OPPOSITE DRIVE OF ALTERNATING-CURRENT MOTORS[1,2]

Frame Designations	FAJ	FAK	FBB Min	FBD Min	FBF Hole			Hole for Accessory Leads††	
					Number	Tap Size	Bolt Penetration Allowance	DP	Diameter
143TFC and 145TFC	5.875	4.500	0.16*	6.50†	4	3/8–16	0.56	2.81	0.41
182TFC and 184TFC	5.875	4.500	0.16*	6.50†	4	3/8–16	0.56	2.81	0.41
213TFC and 215TFC	7.250	8.500	0.25	9.00	4	1/2–13	0.75	3.81	0.62
254TFC and 256TFC	7.250	8.500	0.25	10.00	4	1/2–13	0.75	3.81	0.62
284TFC and 286TFC	9.000	10.500	0.25	11.25	4	1/2–13	0.75	4.50	0.62
324TFC and 326TFC	11.000	12.500	0.25	14.00	4	5/8–11	0.94	5.25	0.62

*The tolerance on this FBB dimension shall be +0.00, -0.06 inch.
†This BD dimension is a nominal dimension.
††When a hole is required in the Type C face for accessory leads, the hole shall be located within the available area defined by a circle located in accordance with the figure and the table.
NOTE—Standards have not been developed for the FU, FAH, FBC, and keyseat dimensions.

[1] For the meaning of the letter dimensions, see 4.01.

[2] For tolerances on FAK dimensions, face runout, and permissible eccentricity of mounting rabbet, see 4.08. For permissible shaft runout, see 4.05.

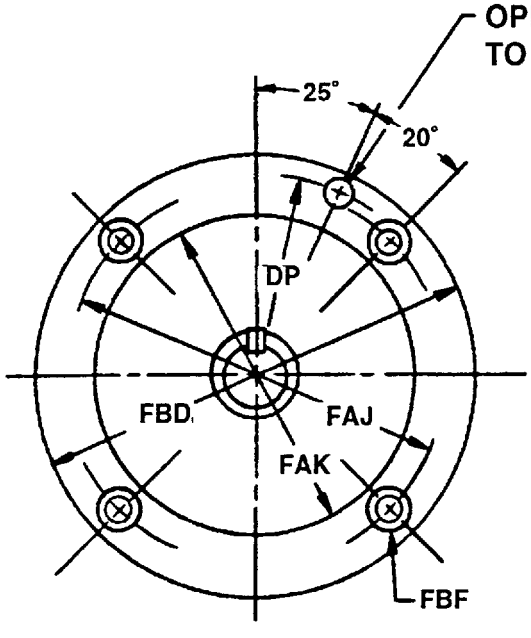

143TFC to 184TFC frames, incl.

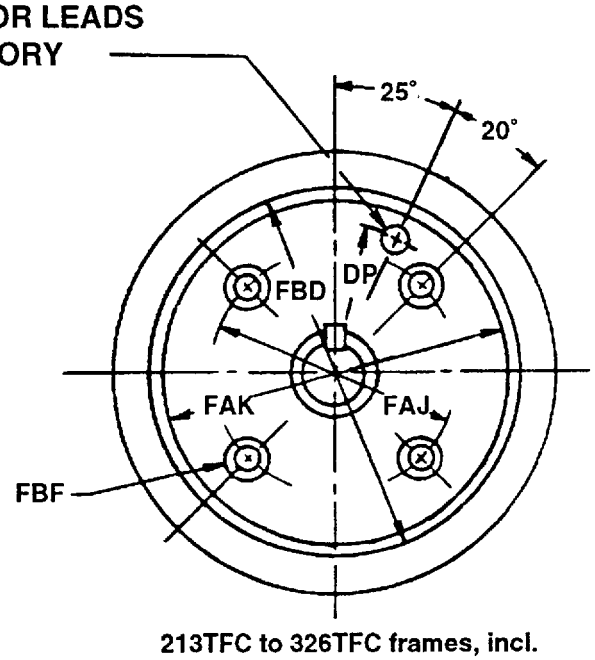

213TFC to 326TFC frames, incl.

All dimensions in inches.

Copyright National Electrical Manufacturers Association
Provided by IHS under license with NEMA
No reproduction or networking permitted without license from IHS
Not for Resale

Copyright National Electrical Manufacturers Association
Provided by IHS under license with NEMA
No reproduction or networking permitted without license from IHS

11.36 DIMENSIONS FOR TYPE D FLANGE-MOUNTING FOOT OR FOOTLESS ALTERNATING-CURRENT MOTORS[1,2,3,4]

								BF Hole					Keyseat		
Frame Designation	AJ	AK	BA	BB*	BC	BD Max	BE No	Number	Size	Recommended Bolt Length	U	AH	R	ES Min	S
143TD and 145TD	10.00	9.000	2.75	0.25	0.00	11.00	0.50	4	0.53	1.25	0.8750	2.25	0.771	1.41	0.188
182TD and 184TD	10.00	9.000	3.50	0.25	0.00	11.00	0.50	4	0.53	1.25	1.1250	2.75	0.986	1.78	0.250
213TD and 215TD	10.00	9.000	4.25	0.25	0.00	11.00	0.50	4	0.53	1.25	1.3750	3.38	1.201	2.41	0.312
254TD and 256TD	12.50	11.000	4.75	0.25	0.00	14.00	0.75	4	0.81	2.00	1.625	4.00	1.416	2.91	0.375
284TD and 286TD	12.50	11.000	4.75	0.25	0.00	14.00	0.75	4	0.81	2.00	1.875	4.62	1.591	3.28	0.500
284TSD and 286TSD	12.50	11.000	4.75	0.25	0.00	14.00	0.75	4	0.81	2.00	1.625	3.25	1.416	1.91	0.375
324TD and 326TD	16.00	14.000	5.25	0.25	0.00	18.00	0.75	4	0.81	2.00	2.125	5.25	1.845	3.91	0.500
324TSD and 326TSD	16.00	14.000	5.25	0.25	0.00	18.00	0.75	4	0.81	2.00	1.875	3.75	1.591	2.03	0.500
364TD and 365TD	16.00	14.000	5.88	0.25	0.00	18.00	0.75	4	0.81	2.00	2.375	5.88	2.021	4.28	0.625
364TSD and 365TSD	16.00	14.000	5.88	0.25	0.00	18.00	0.75	4	0.81	2.00	1.875	3.75	1.591	2.03	0.500
404TD and 405TD	20.00	18.000	6.62	0.25	0.00	22.00	1.00	8	0.81	2.25	2.875	7.25	2.450	5.65	0.750
404TSD and 405TSD	20.00	18.000	6.62	0.25	0.00	22.00	1.00	8	0.81	2.25	2.125	4.25	1.845	2.78	0.500
444TD and 445TD	20.00	18.000	7.50	0.25	0.00	22.00	1.00	8	0.81	2.25	3.375	8.50	2.880	6.91	0.875
444TSD and 445TSD	20.00	18.000	7.50	0.25	0.00	22.00	1.00	8	0.81	2.25	2.375	4.75	2.021	3.03	0.625
447TD and 449TD	20.00	18.000	7.50	0.25	0.00	22.00	1.00	8	0.81	2.25	3.375	8.50	2.880	6.91	0.875
447TSD and 449TSD	20.00	18.000	7.50	0.25	0.00	22.00	1.00	8	0.81	2.25	2.375	4.75	2.021	3.03	0.625
500 frame series	22.00	18.000	...	0.25	0.00	22.00	...	8	0.81	...	...	...	...	...	...

All dimensions in inches
*Tolerance is +0.00 inch, -0.06 inch.

[1]For the meaning of the letter dimension, see MG 1-4.01 and Figure 4-4.
[2]See MG 1-11.31 for dimensions A, B, D, E, 2F, and H for frames 143TD-445TSD, and for dimensions D, E, 2F, and BA for the 500 frame series.
[3]For tolerances on shaft extension diameters and keyseats, see MG 1-4.05.
[4]For tolerances on AK dimensions, face runout, and permissible eccentricity of mounting rabbet, see MG 1-4.08.

Not for Resale

Copyright National Electrical Manufacturers Association
Provided by IHS under license with NEMA
No reproduction or networking permitted without license from IHS

Not for Resale

NEMA MG*1 93 ■ 6470247 0502949 757 ■

Section II

SMALL (FRACTIONAL) AND MEDIUM (INTEGRAL) MACHINES

Part 11

DIMENSIONS—DC SMALL AND MEDIUM MACHINES

11.0 SCOPE

The standards in this Part 11 of Section II cover direct-current machines built in frames with continuous dripproof ratings, or equivalent capacities, up to and including:

motors: 1.25 horsepower per rpm, open type
generators: 1.0 kilowatt per rpm, open type

Copyright National Electrical Manufacturers Association
Provided by IHS under license with NEMA
No reproduction or networking permitted without license from IHS

Not for Resale

Copyright National Electrical Manufacturers Association
Provided by IHS under license with NEMA
No reproduction or networking permitted without license from IHS

11.60 DIMENSIONS FOR DIRECT-CURRENT SMALL MOTORS WITH SINGLE STRAIGHT SHAFT EXTENSION[1,2]

Frame Designations	A Max	B Max	D*	E	2F†	BA	H† Slot	U	N-W	Keyseat R	Keyseat ES Min	Keyseat S
42	. . .	. . .	2.62	1.75	1.69	2.06	0.28	0.3750	1.12	0.328	. . .	flat
48	. . .	. . .	3.00	2.12	2.75	2.50	0.34	0.5000	1.50	0.453	. . .	flat
56	. . .	. . .	3.50	2.44	3.00	2.75	0.34	0.6250	1.88	0.517	1.41	0.188
56H	. . .	. . .	3.50	2.44	5.00	2.75	0.34	0.6250	1.88	0.517	1.41	0.188

All dimensions in inches.

*The tolerance on the D dimension for rigid base motors shall be +0.00 inch, −0.06 inch. No tolerance has been established for the D dimension of resilient mounted motors.

†The tolerance for the 2F dimension shall be ±0.03 inch and for the H dimension (width of slot) shall be +0.05 inch, −0 inch.

NOTE I—It is recommended that all machines with keyseats cut in the shaft extension for pulley, coupling, pinion, etc., be furnished with a key unless otherwise specified by the purchaser.

NOTE II—If the shaft extension length of the motor is not suitable for the application, it is recommended that deviations from this length be in 0.25-inch increments.

[1]For the meaning of the letter dimensions, see MG 1-4.01 and Figures 4-1 and 4-2.
[2]For tolerances on shaft extension diameters and keyseats, see MG 1-4.05.

Not for Resale

Copyright National Electrical Manufacturers Association
Provided by IHS under license with NEMA
No reproduction or networking permitted without license from IHS
Not for Resale

11.61 DIMENSIONS FOR FOOT-MOUNTED INDUSTRIAL DIRECT-CURRENT MACHINES[1,2]

Frame Designations	A Max	B Max	D*	E†	2F†	BA	H† Hole	AL	AM	AO	AR	AU	AX	AY Max Bases	BT
182AT	9.00	6.50	4.50	3.75	4.50	2.75	0.41	12.75	9.50	4.50	4.25	0.50	1.50	0.50	3.00
183AT	9.00	7.00	4.50	3.75	5.00	2.75	0.41	12.75	10.00	4.50	4.50	0.50	1.50	0.50	3.00
184AT	9.00	7.50	4.50	3.75	5.50	2.75	0.41	12.75	10.50	4.50	4.75	0.50	1.50	0.50	3.00
185AT	9.00	8.25	4.50	3.75	6.25	2.75	0.41	12.75	11.25	4.50	5.12	0.50	1.50	0.50	3.00
186AT	9.00	9.00	4.50	3.75	7.00	2.75	0.41	12.75	12.00	4.50	5.50	0.50	1.50	0.50	3.00
187AT	9.00	10.00	4.50	3.75	8.00	2.75	0.41	12.75	13.00	4.50	6.00	0.50	1.50	0.50	3.00
188AT	9.00	11.00	4.50	3.75	9.00	2.75	0.41	12.75	14.00	4.50	6.50	0.50	1.50	0.50	3.00
189AT	9.00	12.00	4.50	3.75	10.00	2.75	0.41	12.75	15.00	4.50	7.00	0.50	1.50	0.50	3.00
1810AT	9.00	13.00	4.50	3.75	11.00	2.75	0.41	12.75	16.00	4.50	7.50	0.50	1.50	0.50	3.00
213AT	10.50	7.50	5.25	4.25	5.50	3.50	0.41	15.00	11.00	5.25	4.75	0.50	1.75	0.50	3.50
214AT	10.50	8.25	5.25	4.25	6.25	3.50	0.41	15.00	11.75	5.25	5.12	0.50	1.75	0.50	3.50
215AT	10.50	9.00	5.25	4.25	7.00	3.50	0.41	15.00	12.50	5.25	5.50	0.50	1.75	0.50	3.50
216AT	10.50	10.00	5.25	4.25	8.00	3.50	0.41	15.00	13.50	5.25	6.00	0.50	1.75	0.50	3.50
217AT	10.50	11.00	5.25	4.25	9.00	3.50	0.41	15.00	14.50	5.25	6.50	0.50	1.75	0.50	3.50
218AT	10.50	12.00	5.25	4.25	10.00	3.50	0.41	15.00	15.50	5.25	7.00	0.50	1.75	0.50	3.50
219AT	10.50	13.00	5.25	4.25	11.00	3.50	0.41	15.00	16.50	5.25	7.50	0.50	1.75	0.50	3.50
2110AT	10.50	14.50	5.25	4.25	12.50	3.50	0.41	15.00	18.00	5.25	8.25	0.50	1.75	0.50	3.50
253AT	12.50	9.50	6.25	5.00	7.00	4.25	0.53	17.75	13.88	6.25	6.00	0.62	2.00	0.62	4.00
254AT	12.50	10.75	6.25	5.00	8.25	4.25	0.53	17.75	15.12	6.25	6.62	0.62	2.00	0.62	4.00
255AT	12.50	11.50	6.25	5.00	9.00	4.25	0.53	17.75	15.88	6.25	7.00	0.62	2.00	0.62	4.00
256AT	12.50	12.50	6.25	5.00	10.00	4.25	0.53	17.75	16.88	6.25	7.50	0.62	2.00	0.62	4.00
257AT	12.50	13.50	6.25	5.00	11.00	4.25	0.53	17.75	17.88	6.25	8.00	0.62	2.00	0.62	4.00
258AT	12.50	15.00	6.25	5.00	12.50	4.25	0.53	17.75	19.38	6.25	8.75	0.62	2.00	0.62	4.00
259AT	12.50	16.50	6.25	5.00	14.00	4.25	0.53	17.75	20.88	6.25	9.50	0.62	2.00	0.62	4.00
283AT	14.00	11.00	7.00	5.50	8.00	4.75	0.53	19.75	15.38	7.00	6.75	0.62	2.00	0.62	4.50
284AT	14.00	12.50	7.00	5.50	9.50	4.75	0.53	19.75	16.88	7.00	7.50	0.62	2.00	0.62	4.50
285AT	14.00	13.00	7.00	5.50	10.00	4.75	0.53	19.75	17.38	7.00	7.75	0.62	2.00	0.62	4.50
286AT	14.00	14.00	7.00	5.50	11.00	4.75	0.53	19.75	18.38	7.00	8.25	0.62	2.00	0.62	4.50
287AT	14.00	15.50	7.00	5.50	12.50	4.75	0.53	19.75	19.88	7.00	9.00	0.62	2.00	0.62	4.50
288AT	14.00	17.00	7.00	5.50	14.00	4.75	0.53	19.75	21.38	7.00	9.75	0.62	2.00	0.62	4.50
289AT	14.00	19.00	7.00	5.50	16.00	4.75	0.53	19.75	23.38	7.00	10.75	0.62	2.00	0.62	4.50
323AT	16.00	12.50	8.00	6.25	9.00	5.25	0.66	22.75	17.75	8.00	7.75	0.75	2.50	0.75	5.25
324AT	16.00	14.00	8.00	6.25	10.50	5.25	0.66	22.75	19.25	8.00	8.50	0.75	2.50	0.75	5.25
325AT	16.00	14.50	8.00	6.25	11.00	5.25	0.66	22.75	19.75	8.00	8.75	0.75	2.50	0.75	5.25
326AT	16.00	15.50	8.00	6.25	12.00	5.25	0.66	22.75	20.75	8.00	9.25	0.75	2.50	0.75	5.25
327AT	16.00	17.50	8.00	6.25	14.00	5.25	0.66	22.75	22.75	8.00	10.25	0.75	2.50	0.75	5.25
328AT	16.00	19.50	8.00	6.25	16.00	5.25	0.66	22.75	24.75	8.00	11.25	0.75	2.50	0.75	5.25
329AT	16.00	21.50	8.00	6.25	18.00	5.25	0.66	22.75	26.75	8.00	12.25	0.75	2.50	0.75	5.25

(See Part 11, page 17, for notes.)

(continued)

11.61 (continued)

Frame Designations	A Max	B Max	D*	E†	2F†	BA	H† Hole	AL	AM	AO	AR	AU	AX	AY Max Bases	BT
363AT	18.00	14.00	9.00	7.00	10.00	5.88	0.81	25.50	19.25	9.00	8.25	0.88	2.50	0.75	6.00
364AT	18.00	15.25	9.00	7.00	11.25	5.88	0.81	25.50	20.50	9.00	9.12	0.88	2.50	0.75	6.00
365AT	18.00	16.25	9.00	7.00	12.25	5.88	0.81	25.50	21.50	9.00	9.62	0.88	2.50	0.75	6.00
366AT	18.00	18.00	9.00	7.00	14.00	5.88	0.81	25.50	23.25	9.00	10.50	0.88	2.50	0.75	6.00
367AT	18.00	20.00	9.00	7.00	16.00	5.88	0.81	25.50	25.25	9.00	11.50	0.88	2.50	0.75	6.00
368AT	18.00	22.00	9.00	7.00	18.00	5.88	0.81	25.50	27.25	9.00	12.50	0.88	2.50	0.75	6.00
369AT	18.00	24.00	9.00	7.00	20.00	5.88	0.81	25.50	29.25	9.00	13.50	0.88	2.50	0.75	6.00
403AT	20.00	15.00	10.00	8.00	11.00	6.62	0.94	28.75	21.12	10.00	9.25	1.00	3.00	0.88	7.00
404AT	20.00	16.25	10.00	8.00	12.25	6.62	0.94	28.75	22.38	10.00	9.88	1.00	3.00	0.88	7.00
405AT	20.00	17.75	10.00	8.00	13.75	6.62	0.94	28.75	23.88	10.00	10.62	1.00	3.00	0.88	7.00
406AT	20.00	20.00	10.00	8.00	16.00	6.62	0.94	28.75	26.12	10.00	11.75	1.00	3.00	0.88	7.00
407AT	20.00	22.00	10.00	8.00	18.00	6.62	0.94	28.75	28.12	10.00	12.75	1.00	3.00	0.88	7.00
408AT	20.00	24.00	10.00	8.00	20.00	6.62	0.94	28.75	30.12	10.00	13.75	1.00	3.00	0.88	7.00
409AT	20.00	26.00	10.00	8.00	22.00	6.62	0.94	28.75	32.12	10.00	14.75	1.00	3.00	0.88	7.00
443AT	22.00	16.50	11.00	9.00	12.50	7.50	1.06	31.25	22.62	11.00	10.00	1.12	3.00	0.88	7.50
444AT	22.00	18.50	11.00	9.00	15.00	7.50	1.06	31.25	24.62	11.00	11.00	1.12	3.00	0.88	7.50
445AT	22.00	20.50	11.00	9.00	16.50	7.50	1.06	31.25	26.62	11.00	12.00	1.12	3.00	0.88	7.50
446AT	22.00	22.00	11.00	9.00	18.00	7.50	1.06	31.25	28.12	11.00	12.75	1.12	3.00	0.88	7.50
447AT	22.00	24.00	11.00	9.00	20.00	7.50	1.06	31.25	30.12	11.00	13.75	1.12	3.00	0.88	7.50
448AT	22.00	26.00	11.00	9.00	22.00	7.50	1.06	31.25	32.12	11.00	14.75	1.12	3.00	0.88	7.50
449AT	22.00	29.00	11.00	9.00	25.00	7.50	1.06	31.25	35.12	11.00	16.25	1.12	3.00	0.88	7.50
502AT	25.00	17.50	12.50	10.00	12.50	8.50	1.19	35.00	24.50	12.50	10.75	1.25	3.50	. . .	8.00
503AT	25.00	19.00	12.50	10.00	14.00	8.50	1.19	35.00	26.00	12.50	11.50	1.25	3.50	. . .	8.00
504AT	25.00	21.00	12.50	10.00	16.00	8.50	1.19	35.00	28.00	12.50	12.50	1.25	3.50	. . .	8.00
505AT	25.00	23.00	12.50	10.00	18.00	8.50	1.19	35.00	30.00	12.50	13.50	1.25	3.50	. . .	8.00
506AT	25.00	25.00	12.50	10.00	20.00	8.50	1.19	35.00	32.00	12.50	14.50	1.25	3.50	. . .	8.00
507AT	25.00	27.00	12.50	10.00	22.00	8.50	1.19	35.00	34.00	12.50	15.50	1.25	3.50	. . .	8.00
508AT	25.00	30.00	12.50	10.00	25.00	8.50	1.19	35.00	37.00	12.50	17.00	1.25	3.50	. . .	8.00
509AT	25.00	33.00	12.50	10.00	28.00	8.50	1.19	35.00	40.00	12.50	18.50	1.25	3.50	. . .	8.00
583	29.00	21.00	14.50	11.50	16.00	10.00	1.19	38.75	29.00	14.50	13.00	1.25	4.00	. . .	8.50
584	29.00	23.00	14.50	11.50	18.00	10.00	1.19	38.75	31.00	14.50	14.00	1.25	4.00	. . .	8.50
585	29.00	25.00	14.50	11.50	20.00	10.00	1.19	38.75	33.00	14.50	15.00	1.25	4.00	. . .	8.50
586	29.00	27.00	14.50	11.50	22.00	10.00	1.19	38.75	35.00	14.50	16.00	1.25	4.00	. . .	8.50
587	29.00	30.00	14.50	11.50	25.00	10.00	1.19	38.75	38.00	14.50	17.50	1.25	4.00	. . .	8.50
588	29.00	33.00	14.50	11.50	28.00	10.00	1.19	38.75	41.00	14.50	19.00	1.25	4.00	. . .	8.50
683	34.00	25.00	17.00	13.50	20.00	11.50	1.19	42.50	30.75	13.50	14.00	1.38	4.25	. . .	9.00
684	34.00	27.00	17.00	13.50	22.00	11.50	1.19	42.50	32.75	13.50	15.00	1.38	4.25	. . .	9.00
685	34.00	30.00	17.00	13.50	25.00	11.50	1.19	42.50	35.75	13.50	16.50	1.38	4.25	. . .	9.00
686	34.00	33.00	17.00	13.50	28.00	11.50	1.19	42.50	38.75	13.50	18.00	1.38	4.25	. . .	9.00
687	34.00	37.00	17.00	13.50	32.00	11.50	1.19	42.50	42.75	13.50	20.00	1.38	4.25	. . .	9.00
688	34.00	41.00	17.00	13.50	36.00	11.50	1.19	42.50	46.75	13.50	22.00	1.38	4.25	. . .	9.00

(See Part 11, page 17, for notes.)

Copyright National Electrical Manufacturers Association
Provided by IHS under license with NEMA
No reproduction or networking permitted without license from IHS
Not for Resale

Copyright National Electrical Manufacturers Association
Provided by IHS under license with NEMA
No reproduction or networking permitted without license from IHS

11.61 *(continued)*

Frame Designations‡	Drive End—For Belt Drive						Drive End—For Direct-connected Drive‡						End Opposite Drive—Straight					
				Keyseat						Keyseat						Keyseat		
	U	N-W	V Min	R	ES Min	S	U	N-W	V Min	R	ES Min	S	FU	FN-FW	FV Min	FR	FES Min	FS
182AT-1810AT	1.1250	2.25	2.00	0.986	1.41	0.250	...	...	...	...	...	...	0.8750	1.75	1.50	0.771	0.91	0.188
213AT-2110AT	1.3750	2.75	2.50	1.201	1.78	0.312	...	...	...	...	...	...	1.1250	2.25	2.00	0.986	1.41	0.250
253AT-259AT	1.625	3.25	3.00	1.416	2.28	0.375	...	...	...	...	...	...	1.3750	2.75	2.50	1.201	1.78	0.312
283AT-289AT	1.875	3.75	3.50	1.591	2.53	0.500	...	...	...	...	...	...	1.625	3.25	3.00	1.416	2.28	0.375
323AT-329AT	2.125	4.25	4.00	1.845	3.03	0.500	...	...	...	...	...	...	1.875	3.75	3.50	1.591	2.53	0.500
363AT-369AT	2.375	4.75	4.50	2.021	3.53	0.625	...	...	...	...	...	...	2.125	4.25	4.00	1.845	3.03	0.500
403AT-409AT	2.625	5.25	5.00	2.275	4.03	0.625	...	...	...	...	...	...	2.375	4.75	4.50	2.021	3.53	0.625
443AT-449AT	2.875	5.75	5.50	2.450	4.53	0.750	...	...	...	...	...	...	2.625	5.25	5.00	2.275	4.03	0.625
502AT-509AT	3.250	6.50	6.25	2.831	5.28	0.750	...	...	...	...	...	...	2.875	5.75	5.50	2.450	4.53	0.750
583A-588A	3.250	9.75	9.50	2.831	8.28	0.750	2.875	5.75	5.50	2.450	4.28	0.750	...	...	...	...	...	...
683A-688A	3.625	10.88	10.62	3.134	9.53	0.875	3.250	6.50	6.25	2.831	5.03	0.750	...	...	...	...	...	...

All dimensions in inches.

*Frames 182AT to 329AT, inclusive—The tolerance on the D dimension shall be +0.00 inch, −0.03 inch. Frames 363AT to 688A, inclusive—The tolerance on the D dimension shall be +0.00 inch, −0.06 inch.

†The tolerance for the 2E and 2F dimensions shall be ±0.03 inch and for the H dimension shall be +0.05 inch, −0.00 inch.

‡When frames 583A through 688A have a shaft extension for direct-connected drive, the frame number shall have a suffix letter "S" (that is, 583AS).

[1]For the meaning of the letter dimension, see MG 1-4.01 and Figures 4-1 and 4-2.

[2]It is recommended that all machines with keyseats cut in the shaft extension for pulley, coupling, pinion, and so forth be furnished with a key unless otherwise specified by the purchaser.

Not for Resale

Copyright National Electrical Manufacturers Association
Provided by IHS under license with NEMA
No reproduction or networking permitted without license from IHS

11.62 DIMENSIONS FOR FOOT-MOUNTED INDUSTRIAL DIRECT-CURRENT MOTORS[1,2]

Frame Designations	A Max	B Max	D*	E†	2F†	BA	H† Hole	AL	AM	AO	AR	AU	AX	AY Max Bases	BT
142AT	7.00	6.75	3.50	2.75	3.50	2.75	0.34	...	...	...	...	...	...	...	...
143AT	7.00	7.25	3.50	2.75	4.00	2.75	0.34	...	...	...	...	...	...	...	...
144AT	7.00	7.75	3.50	2.75	4.50	2.75	0.34	...	...	...	...	...	...	...	...
145AT	7.00	8.25	3.50	2.75	5.00	2.75	0.34	...	...	...	...	...	...	...	...
146AT	7.00	8.75	3.50	2.75	5.50	2.75	0.34	...	...	...	...	...	...	...	...
147AT	7.00	9.50	3.50	2.75	6.25	2.75	0.34	...	...	...	...	...	...	...	...
148AT	7.00	10.25	3.50	2.75	7.00	2.75	0.34	...	...	...	...	...	...	...	...
149AT	7.00	11.25	3.50	2.75	8.00	2.75	0.34	...	...	...	...	...	...	...	...
1410AT	7.00	12.25	3.50	2.75	9.00	2.75	0.34	...	...	...	...	...	...	...	...
1411AT	7.00	13.25	3.50	2.75	10.00	2.75	0.34	...	...	...	...	...	...	...	...
1412AT	7.00	14.25	3.50	2.75	11.00	2.75	0.34	...	...	...	...	...	...	...	...
162AT	8.00	6.00	4.00	3.12	4.00	2.50	0.41	...	...	...	...	...	...	...	...
163AT	8.00	6.50	4.00	3.12	4.50	2.50	0.41	...	...	...	...	...	...	...	...
164AT	8.00	7.00	4.00	3.12	5.00	2.50	0.41	...	...	...	...	...	...	...	...
165AT	8.00	7.50	4.00	3.12	5.50	2.50	0.41	...	...	...	...	...	...	...	...
166AT	8.00	8.20	4.00	3.12	6.25	2.50	0.41	...	...	...	...	...	...	...	...
167AT	8.00	9.00	4.00	3.12	7.00	2.50	0.41	...	...	...	...	...	...	...	...
168AT	8.00	10.00	4.00	3.12	8.00	2.50	0.41	...	...	...	...	...	...	...	...
169AT	8.00	11.00	4.00	3.12	9.00	2.50	0.41	...	...	...	...	...	...	...	...
1610AT	8.00	12.00	4.00	3.12	10.00	2.50	0.41	...	...	...	...	...	...	...	...

	Drive End—For Belt Drive						Drive End—For Direct-connected Drive						End Opposite Drive—Straight					
				Keyseat						Keyseat						Keyseat		
Frame Designations	U	N-W	V Min	R	ES Min	S	U	N-W	V Min	R	ES Min	S	FU	FN-FW	FV Min	FR	FES Min	FS
142AT-1412AT	0.8750	2.25	2.00	0.771	0.91	0.188	...	...	...	...	...	...	0.625	1.25	1.00	0.517	0.66	0.188
162AT-1610AT	0.8750	1.75	1.50	0.771	0.91	0.188	...	...	...	...	...	...	0.625	1.25	1.00	0.517	0.66	0.188

All dimensions in inches.

*The tolerance on the D dimension shall be +0.00 inch, −0.03 inch.

†The tolerance for the 2E and 2F dimensions shall be ±0.03 inch and for the H dimension shall be +0.05 inch, −0 inch.

NOTE—It is recommended that all machines with keyseats cut in the shaft extension for pulley, coupling, pinion, etc., be furnished with a key unless otherwise specified by the purchaser.

[1]For the meaning of the letter dimensions, see MG 1-4.01 and Figures 4-1 and 4-2.

[2]For tolerances on shaft extension diameters and keyseats, see MG 1-4.05.

Not for Resale

Copyright National Electrical Manufacturers Association
Provided by IHS under license with NEMA
No reproduction or networking permitted without license from IHS

11.63 DIMENSIONS FOR TYPE C FACE-MOUNTING DIRECT-CURRENT SMALL MOTORS[1,2,3,4]

Frame Designations	AJ	AK	BA	BB*	BC	BD Nom	DF Hole Number	DF Hole Tap Size	U	AH†	Keyseat R	Keyseat ES Min	Keyseat S
42C	3.750	3.000	2.062	0.16	−0.19	5.00	4	1/4-20	0.3750	1.312	0.328	. . .	flat
48C	3.750	3.000	2.50	0.16	−0.19	5.625	4	1/4-20	0.500	1.69	0.453	. . .	flat
56C	5.875	4.500	2.75	0.16	−0.19	6.50	4	3/8-16	0.6250	2.06	0.517	1.41	0.188

All dimensions in inches.
*These BB dimensions have a tolerance of +0.00, −0.06 inch.
†If the shaft extension length of the motor is not suitable for the application, it is recommended that deviations from the length be in 0.25-inch increments.

NEMA Standard 12-16-1971, revised 5-17-1972; 9-20-1978.

11.64 DIMENSIONS FOR TYPE C FACE-MOUNTING INDUSTRIAL DIRECT-CURRENT MOTORS[1,3,4,5]

Frame Designations	AJ	AK	BA	BB	BC	BD Max	BF Hole Number	BF Hole Tap Size	BF Hole Bolt Penetration Allowance	U	AH	Keyseat R	Keyseat ES Min	Keyseat S
182ATC-1810ATC	7.250	8.500	2.75	0.25	0.12	9.00	4	1/2-13	0.75	1.1250	2.12	0.986	1.41	0.250
213ATC-2110ATC	7.250	8.500	3.50	0.25	0.25	9.00	4	1/2-13	0.75	1.3750	2.50	1.201	1.78	0.312
253ATC-259ATC	7.250	8.500	4.25	0.25	0.25	10.00	4	1/2-13	0.75	1.625	3.00	1.416	2.28	0.375
283ATC-289ATC	9.000	10.500	4.75	0.25	0.25	11.25	4	1/2-13	0.75	1.875	3.50	1.591	2.53	0.500
323ATC-329ATC	11.000	12.500	5.25	0.25	0.25	14.00	4	5/8-11	0.94	2.125	4.00	1.845	3.03	0.500
363ATC-369ATC	11.000	12.500	5.88	0.25	0.25	14.00	8	5/8-11	0.94	2.375	4.50	2.021	3.53	0.625

All dimensions in inches.

[1]For the meaning of the letter dimensions, see MG 1-4.01 and Figure 4-3.
[2]See MG 1-11.60 for dimensions D, E, and 2F when the motor is provided with feet.
[3]For tolerances on shaft extension diameters and keyseats, see MG 1-4.05.
[4]For tolerances on AK dimensions, face runout, and permissible eccentricity of mounting rabbet, see MG 1-4.08.
[5]See MG 1-11.61 for dimensions A, B, D, E, 2F, H, and BA when the motor is provided with feet.

Not for Resale

11.65 DIMENSIONS FOR TYPE C FACE-MOUNTING INDUSTRIAL DIRECT-CURRENT MOTORS[1,2,3,4]

Frame Designations	AJ	AK	BA	BB*	BC	BD Max	BF Hole			U	AH	Keyseat		
							Number	Tap Size	Bolt Penetration Allowance			R	ES Min	S
142ATC-1412ATC	5.875	4.500	2.75	0.16	0.12	6.50	4	3/8-16	0.56	0.8750	2.12	0.771	1.41	0.188
162ATC-1610ATC	5.875	4.500	2.50	0.16	0.12	6.50	4	3/8-16	0.56	0.8750	2.12	0.771	1.41	0.188

All dimensions in inches.

*Tolerance = +0.00 inch, −0.06 inch.

[1]See MG 1-11.62 for dimensions A, B, D, E, 2F, and H when the motor is provided with feet.
[2]For the meaning of the letter dimensions, see MG 1-4.01 and Figure 4-3.
[3]For tolerances on shaft extension diameters and keyseats, see MG 1-4.05.
[4]For tolerances on AK dimensions, face runout, and permissible eccentricity of mounting rabbet, see MG 1-4.08.

Copyright National Electrical Manufacturers Association
Provided by IHS under license with NEMA
No reproduction or networking permitted without license from IHS
Not for Resale

Copyright National Electrical Manufacturers Association
Provided by IHS under license with NEMA
No reproduction or networking permitted without license from IHS
Not for Resale

11.66 DIMENSIONS FOR TYPE D FLANGE-MOUNTING INDUSTRIAL DIRECT-CURRENT MOTORS[1,2,3,4]

Frame Designations	AJ	AK	BB*	BC	BD Max	BE Nom	BF Clearance Hole			U	AH	Keyseat	
							Size	Number	Recommended Bolt Length			R	S
182ATD-1810ATD	10.00	9.000	0.25	0	11.00	0.50	0.53	4	1.25	1.1250	2.25	0.986	0.250
213ATD-2110ATD	12.50	11.000	0.25	0	14.00	0.75	0.81	4	2.00	1.3750	2.75	1.201	0.312
253ATD-259ATD	16.00	14.000	0.25	0	18.00	0.75	0.81	4	2.00	1.625	3.25	1.416	0.375
283ATD-289ATD	16.00	14.000	0.25	0	18.00	0.75	0.81	4	2.00	1.875	3.75	1.591	0.500
323ATD-329ATD	16.00	14.000	0.25	0	18.00	0.75	0.81	4	2.00	2.125	4.25	1.845	0.500
363ATD-369ATD	20.00	18.000	0.25	0	22.00	1.00	0.81	8	2.25	2.375	4.75	2.021	0.625
403ATD-409ATD	22.00	18.000	0.25	0	24.00	1.00	0.81	8	2.25	2.625	5.25	2.275	0.625
443ATD-449ATD	22.00	18.000	0.25	0	24.00	1.00	0.81	8	2.25	2.875	5.75	2.450	0.750
502ATD-509ATD	30.00	28.000	0.25	0.38	32.00	1.00	0.81	8	2.50	3.250	6.88	2.831	0.750
583AD-588AD	30.00	28.000	0.25	0.38	32.00	1.00	0.81	8	2.50	3.250	10.12	2.831	0.750
583ASD-588ASD	30.00	28.000	0.25	0.38	32.00	1.00	0.81	8	2.50	2.875	6.12	2.845	0.750
683AD-688AD	35.25	33.250	0.25	0.38	37.25	1.00	0.81	8	2.50	3.625	11.25	3.134	0.875
683ASD-688ASD	35.25	33.250	0.25	0.38	37.25	1.00	0.81	8	2.50	3.250	6.88	2.831	0.750

All dimensions in inches.

*These BB dimensions have a tolerance of +0.00, −0.06 inch.

[1]For the meaning of the letter dimensions, see MG 1-4.01 and Figure 4-4.
[2]See MG 1-11.61 for dimensions A, B, D, E, 2F, H, and BA.
[3]For tolerances on shaft extension diameters and keyseats, see MG 1-4.05.
[4]For tolerances on AK dimensions, face runout, and permissible eccentricity of mounting rabbet, see MG 1-4.08.

11.67 BASE DIMENSIONS FOR TYPES P AND PH VERTICAL SOLID-SHAFT INDUSTRIAL DIRECT-CURRENT MOTORS[1]

				BF Clearance Hole	
AJ	AK	BB Min	BD Max	Number	Size
9.125	8.250	0.19	10.00	4	0.44
9.125	8.250	0.19	12.00	4	0.44
14.750	13.500	0.25	16.50	4	0.69
14.750	13.500	0.25	20.00	4	0.69
14.750	13.500	0.25	24.50	4	0.69

All dimensions in inches.
Tolerances (see 4.07.)
AK dimension—
For 8.250 inches, +0.003 inch, 0.000 inch.
For 13.500 inches, +0.005 inch, -0.000 inch.
Face runout—
For AJ of 9.125 inches, 0.004-inch indicator reading.
For AJ of 14.750 inches, 0.007-inch indicator reading.
Permissible eccentricity of mounting rabbet—
For AK of 8.250 inches, 0.004-inch indicator reading.
For AK of 13.500 inches, 0.007-inch indicator reading.

11.68 DIMENSIONS FOR TYPE FC FACE-MOUNTING FOR ACCESSORIES ON END OPPOSITE DRIVE OF INDUSTRIAL DIRECT-CURRENT MOTORS[2,3]

				FBF Hole		
FAJ	FAK	FBB*	FBC	Number	Tap Size	Bolt Penetration Allowance
5.875	4.500	0.16	0.12	4	3/8–16	0.56
7.250	8.500	0.31	0.25	4	1/2–13	0.75
9.000	10.500	0.31	0.25	4	1/2–13	0.75
11.000	12.500	0.31	0.25	4	5/8–11	0.94

All dimensions in inches.
*Tolerances—FBB dimension—
For 0.16 inch, +0.00 inch, -0.03 inch.
For 0.31 inch, +0.00 inch, -0.06 inch.

[1] For the meaning of the letter dimensions, see 4.01 and Figure 4-5.
[2] For the meaning of the letter dimensions, see 4.01 and Figure 4-3.
[3] For tolerances on FAK dimensions, face runout, and permissible eccentricity of mounting rabbet, see 4.08. For permissible shaft runout, see 4.05

Copyright National Electrical Manufacturers Association
Provided by IHS under license with NEMA
No reproduction or networking permitted without license from IHS
Not for Resale

Section II

SMALL (FRACTIONAL) AND MEDIUM (INTEGRAL) MACHINES

Part 12

TESTS AND PERFORMANCE—AC AND DC MOTORS

12.0 SCOPE

The standards in this Part 12 of Section II cover the following machines.

a. Alternating-Current Motors

Alternating-current motors up to and including the ratings built in frames corresponding to the continuous open-type ratings given in the table below.

Synchronous Speed	Motors Squirrel-Cage and Wound Rotor, Hp	Motors, Synchronous, Hp	
		Power Factor	
		Unity	0.8
3600	500	500	400
1800	500	500	400
1200	350	350	300
900	250	250	200
720	200	200	150
600	150	150	125
514	125	125	100

b. Direct-Current Motors

Direct-current motors built in frames with continuous dripproof ratings, or equivalent capacities, up to and including 1.25 horsepower per rpm, open type.

12.02 HIGH-POTENTIAL TEST—SAFETY PRECAUTIONS AND TEST PROCEDURE

See 3.01.

Copyright National Electrical Manufacturers Association
Provided by IHS under license with NEMA
No reproduction or networking permitted without license from IHS

Not for Resale

12.03 HIGH-POTENTIAL TEST VOLTAGES FOR UNIVERSAL, INDUCTION, AND DIRECT-CURRENT MOTORS

The high-potential test voltage specified in the following table shall be applied to the windings of each new machine in accordance with the test procedures specified in 3.01.

Category	Effective Test Voltage
A. Universal Motors (rated for operation on circuits not excedding 250 volts)	
1. Motors rated 1/2 horsepower and larger and all motors for portable tools	1000 volts + 2 times the rated voltage of the motor
2. All other motors*	1000 volts
B. Induction and Nonexcited Synchronous Motors	
1. Motors rated 1/2 horsepower and larger	
a. Stator windings	1000 volts + 2 times the rated voltage of the motor
b. For secondary windings of wound rotors of induction motors	1000 volts + 2 times the maximum voltage induced between collector rings on open circuit at standstill (or running if under this condition the voltage is greater) with rated primary voltage applied to the stator terminals
c. For secondary windings of wound rotors of reversing motors	1000 volts + 4 times the maximum voltage induced between collector rings on open circuit at standstill with rated primary voltage applied to the stator terminals
2. Motors rated less than 1/2 horsepower	
a. Rated 250 volts or less	1000 volts
b. Rated above 250 volts	1000 volts + 2 times the rated voltage of the motor
C. Direct-Current Motors	
1. Motors rated 1/2 horsepower and larger	
a. Armature or field windings for use on adjustable-voltage electronic power supply	1000 volts + 2 times the ac line-to-line voltage of the power supply selected for the basis of rating
b. All other armature or field windings	1000 volts + 2 times the rated voltage** of the motor
2. Motors rated less than 1/2 horsepower	
a. 240 volts or less	1000 volts
b. Rated above 240 volts	See C.1.a and C.1.b above (Direct-Current Motors)

*Complete motors less than 1/2 horsepower shall be in the "all other" category unless marked to indicate that they are motors for portable tools.

**Where the voltage rating of a separately excited field of a direct-current motor or generator is not stated, it shall be assumed to be 1.5 times the field resistance in ohms at 25°C times the rated field current.

NOTES

1—Certain applications may require a high-potential test voltage higher than those specified.

2—The normal production high-potential test voltage may be 1.2 times the specified 1-minute high-potential test-voltage, applied for 1 second. (See 3.01.6)

3—To avoid excessive stressing of the insulation, repeated application of the high-potential test-voltage is not recommended. Immediately after manufacture, when equipment is installed or assembled with other apparatus and a high-potential test of the entire assembly is required, it is recommended that the test voltage not exceed 85 percent of the original test voltage or, when in an assembled group, not exceed 85 percent of the lowest test voltage of that group. (See 3.01.11.)

12.04 PRODUCTION HIGH-POTENTIAL TESTING OF SMALL MOTORS

Dielectric failure in high-potential production testing of small motors shall be indicated by a measurement of insulation resistance less than 1 megohm when tested in accordance with 12.02 and 12.03.

12.04.1 Dielectric Test Equipment

The dielectric test equipment should indicate a failure by visual or audible means, or both. The test equipment should preferably be designed to limit the level of applied current to a nondestructive value at the high-potential voltage.

12.04.2 Evaluation of Insulation Systems by a Dielectric Test

The definition of dielectric failure per ASTM D149 is based upon observation of actual rupture of insulation as positive evidence of voltage breakdown. In small motors, a suitable evaluation of insulation quality in production testing may be made without complete rupture of the insulation to ground. As a quality control procedure during manufacture, measurement of the insulation resistance

Copyright National Electrical Manufacturers Association
Provided by IHS under license with NEMA
No reproduction or networking permitted without license from IHS
Not for Resale

NEMA MG*1 93 ■ 6470247 0506764 860 ■

may be taken as a true evaluation of the effectiveness of the insulation system.

12.05 REPETITIVE SURGE TEST FOR SMALL AND MEDIUM MOTORS

Many manufacturers use a repetitive test as a quality control test for the components of motors; for example, stators and rotors. When a large number of motors of a single design are to be tested, a repetitive surge test is a quick and economical test to make to detect the following faults.

a. Grounded windings
b. Short circuits between turns
c. Short circuits between windings
d. Incorrect connections
e. Incorrect number of turns
f. Misplaced conductors or insulation

The repetitive surge test compares an unknown winding with a known winding or a winding assumed to be satisfactory. This is accomplished by superimposing on an oscilloscope the traces of the surge voltage at the terminals of the windings. Major faults are easily detected but a skilled operator is required to distinguish between minor faults; for example, a slipped slot cell and the harmless deviations in the traces which occur when windings are produced by two or more operators who place the coils or form the end turns in slightly different ways.

Unfortunately, the repetitive surge test has disadvantages which limit its general usage, such as the necessity for elaborate preliminary tests before a surge test can be made on production units. For example, voltage distribution through the winding should be investigated because resonant conditions may exist which would cause abnormally high or low stresses at some point in the insulation system of the motor component. Elaborate preliminary tests can seldom be justified when a small number of components is involved because comparatively small changes in design may require additional preliminary tests. When a repetitive surge test is made, the surge voltage level and other test conditions should be based upon data obtained from laboratory tests made on the particular design (or designs) of the motors involved.

When a rotor or stator has two or more identical windings, for example, a polyphase stator, each winding may be tested against the other because it is unlikely that any two of the windings will have identical faults. To make it practicable to surge test rotors or stators of similar motor designs one at a time, it is essential that sufficient data be accumulated by the preliminary tests on several individual designs. When a rotor or stator does not have two identical windings, for example, single-phase stators and direct-current armatures, a minimum of two of the same component is required for the repetitive surge test. In the event that a fault is disclosed by the test, a minimum of three units is required to determine which one had the fault.

It should be noted that, except by undertaking extensive comparative breakdown tests, there is at present no satisfactory way of determining the surge test voltage equivalent to a 60-hertz high-potential test.

12.06 MECHANICAL VIBRATION ▲

See MG 1, Part 7.

12.07 DYNAMIC BALANCE OF MOTOR

Text deleted.

12.08 METHOD OF MEASURING MOTOR VIBRATION ▲

Text deleted.

12.09 BEARING LOSSES—VERTICAL PUMP MOTORS

The added losses in horsepower in angular contact bearings used on vertical pump motors, due to added load over that incurred by the motor rotor, should be calculated by the following formula.

Added losses in horsepower = 2.4×10^{-8} × added load in lbs × revolutions per minute × pitch diameter in inches of the balls in the ball bearing.

Copyright National Electrical Manufacturers Association
Provided by IHS under license with NEMA
No reproduction or networking permitted without license from IHS
Not for Resale

NEMA MG*1 93 ■ 6470247 0506765 7T7 ■

This page intentionally left blank.

Copyright National Electrical Manufacturers Association
Provided by IHS under license with NEMA
No reproduction or networking permitted without license from IHS

Not for Resale

Section II

SMALL (FRACTIONAL) AND MEDIUM (INTEGRAL) MACHINES

Part 12

TESTS AND PERFORMANCE—AC MOTORS

12.0 SCOPE

The standards in this Part 12 of Section II cover alternating-current motors up to and including the ratings built in frames corresponding to the continuous open-type ratings given in the table below.

Synchronous Speed	Motors Squirrel-Cage and Wound Rotor, Hp	Motors, Synchronous, Hp — Power Factor		Generators, Synchronous Revolving Field Type, kW at 0.8 Power Factor
		Unity	0.8	
3600	500	500	400	400
1800	500	500	400	400
1200	350	350	300	300
900	250	250	200	200
720	200	200	150	150
600	150	150	125	125
514	125	125	100	100

12.30 TEST METHODS

Tests to determine performance characteristics shall be made in accordance with the following.

a. For single-phase motors-IEEE Std 114
b. For polyphase induction motors-IEEE Std 112

12.31 PERFORMANCE CHARACTERISTICS

When performance characteristics are provided, they should be expressed as follows.

a. Current in amperes or percent of rated current
b. Torque in pound-feet, pound-inches, ounce-feet, ounce-inches, or percent of full-load torque
c. Output in horsepower or percent of rated horsepower
d. Speed in revolutions per minute or percent of synchronous speed
e. Efficiency in percent
f. Power factor in percent
g. Voltage in volts or percent of rated voltage
h. Input power in watts or kilowatts

NOTE—If SI units are used, they should be in accordance with ISO Publication No. R-1000.

12.32 TORQUE CHARACTERISTICS OF SINGLE-PHASE GENERAL-PURPOSE INDUCTION MOTORS

12.32.1 Breakdown Torque

The breakdown torque of single-phase general-purpose small and medium induction motors shall be the higher figure in each torque range as given in Table 10-5, subject to tolerances in manufacturing and all other conditions given in 10.34.

12.32.2 Locked-Rotor Torque of Small Motors

The locked-rotor torque of single-phase general-purpose small motors, with rated voltage and frequency applied, shall be not less than the following.

Hp	Minimum Locked-Rotor Torque, ounce-feet* — 60-Hertz Synchronous Speed, Rpm			50 Hertz Synchronous Speed, Rpm		
	3600	1800	1200	3000	1500	1000
1/8	...	24	32	...	29	39
1/6	15	33	43	18	39	51
1/4	21	46	59	25	55	70
1/3	26	57	73	31	69	88
1/2	37	85	100	44	102	120
3/4	50	119	...	60	143	...
1	61	...	...	73	...	...

*On the high voltage connection of the dual voltage motors, minimum locked-rotor torques up to 10% less than these values may be expected.

Copyright National Electrical Manufacturers Association
Provided by IHS under license with NEMA
No reproduction or networking permitted without license from IHS

Not for Resale

12.32.3 Locked-Rotor Torque of Medium Motors

The locked-rotor torque of single-phase general-purpose medium motors, with rated voltage and frequency applied, shall be not less than the following.

	Minimum Locked-Rotor Torque, pound-feet		
	Synchronous Speed, Rpm		
Hp	3600	1800	1200
¾	...	...	8.0
1	...	9.0	9.5
1½	4.5	12.5	13.0
2	5.5	16.0	16.0
3	7.5	22.0	23.0
5	11.0	33.0	...
7½	16.0	45.0	...
10	21.0	52.0	...

12.32.4 Pull-Up Torque of Medium Motors

The pull-up torque of single-phase general-purpose alternating-current medium motors, with rated voltage and frequency applied, shall be not less than the rated load torque.

12.33 LOCKED-ROTOR CURRENT OF SINGLE-PHASE SMALL MOTORS

12.33.1 The locked-rotor current of 60-hertz, single-phase motors shall not exceed the values given in the following table.

2-, 4-, 6-, and 8-Pole, 60-Hertz Motors, Single Phase				
	Locked-Rotor Current, Amperes			
	115 Volts		230 Volts	
Hp	Design O	Design N	Design O	Design N
1/6 and smaller	50	20	25	12
¼	50	26	25	15
⅓	50	31	25	18
½	50	45	25	25
¾	...	61	...	35
1	...	80	...	45

12.33.2 The locked-rotor currents of single-phase general-purpose motors shall not exceed the values for Design N motors.

12.34 LOCKED-ROTOR CURRENT OF SINGLE-PHASE MEDIUM MOTORS, DESIGNS L AND M

The locked-rotor current of single-phase, 60-hertz, Design L and M motors of all types, when measured with rated voltage and frequency impressed and with the rotor locked, shall not exceed the following values.

	Locked-rotor Current, Amperes		
	Design L Motors		Design M Motors
Hp	115 Volts	230 Volts	230 Volts
½	45	25	...
¾	61	35	...
1	80	45	...
1½	...	50	40
2	...	65	50
3	...	90	70
5	...	135	100
7½	...	200	150
10	...	260	200

12.35 LOCKED-ROTOR CURRENT OF 3-PHASE 60-HERTZ MEDIUM SQUIRREL-CAGE INDUCTION MOTORS RATED AT 230 VOLTS

12.35.1 The locked-rotor current of single-speed, 3-phase, constant-speed induction motors rated at 230 volts, when measured with rated voltage and frequency impressed and with rotor locked, shall not exceed the values listed on the next page.

Copyright National Electrical Manufacturers Association
Provided by IHS under license with NEMA
No reproduction or networking permitted without license from IHS

Not for Resale

Hp	Locked-Rotor Current, Amperes	Design Letters
1/2	20	B, D
3/4	25	B, D
1	30	B, D
1-1/2	40	B, D
2	50	B, D
3	64	B, C, D
5	92	B, C, D
7-1/2	127	B, C, D
10	162	B, C, D
15	232	B, C, D
20	290	B, C, D
25	365	B, C, D
30	435	B, C, D
40	580	B, C, D
50	725	B, C, D
60	870	B, C, D
75	1085	B, C, D
100	1450	B, C, D
125	1815	B, C, D
150	2170	B, C, D
200	2900	B, C
250	3650	B
300	4400	B
350	5100	B
400	5800	B
450	6500	B
500	7250	B

NOTE—The locked-rotor current of motors designed for voltages other than 230 volts shall be inversely proportional to the voltages.

12.35.2 The values in the above table are rms symmetrical values, i.e. average of the three phases. There will be a one-half cycle instantaneous peak value which may range from 1.8 to 2.8 times the above values as a function of the motor design and switching angle. This is based upon an ambient temperature of 25°C.

12.35A LOCKED-ROTOR CURRENT OF 3-PHASE 60-HERTZ DESIGN E MEDIUM SQUIRREL-CAGE INDUCTION MOTORS RATED AT 230 VOLTS

The locked-rotor current of Design E single-speed, 3-phase, constant-speed induction motors rated at 230 volts, when measured with rated voltage and frequency impressed and with rotor locked, shall not exceed the following values.

Hp	Locked-Rotor Current, Amperes*	Hp	Locked-Rotor Current, Amperes*
1/2	20	50	1030
3/4	25	60	1236
1	30	75	1545
1-1/2	40	100	1873
2	50	125	2341
3	73	150	2809
5	122	200	3745
7-1/2	183	250	4688
10	225	300	5618
15	337	350	6554
20	449	400	7490
25	562	450	8427
30	674	500	9363
40	824		

*The locked-rotor current of motors designed for voltages other than 230 volts shall be inversely proportional to the voltages.

12.36 LOCKED-ROTOR CURRENT OF 3-PHASE 50-HERTZ MEDIUM SQUIRREL-CAGE INDUCTION MOTORS RATED AT 380 VOLTS

The locked-rotor current of single-speed, 3-phase, constant-speed induction motors rated at 380 volts, when measured with rated voltage and frequency impressed and with rotor locked, shall not exceed the values shown in Table 12-1.

Table 12-1
LOCKED-ROTOR CURRENT VALUES

Hp	Locked-Rotor Current, Amperes*	Design Letters	Hp	Locked-Rotor Current, Amperes*	Design Letters
1 or less	20	B, D	30	289	B, C, D
1-1/2	27	B, D	40	387	B, C, D
2	34	B, D	50	482	B, C, D
3	43	B, C, D	60	578	B, C, D
5	61	B, C, D	75	722	B, C, D
7-1/2	84	B, C, D	100	965	B, C, D
10	107	B, C, D	125	1207	B, C, D
15	154	B, C, D	150	1441	B, C, D
20	194	B, C, D	200	1927	B, C
25	243	B, C, D			

*The locked-rotor current of motors designed for voltages other than 380 volts shall be inversely proportional to the voltages.

Copyright National Electrical Manufacturers Association
Provided by IHS under license with NEMA
No reproduction or networking permitted without license from IHS

Not for Resale

12.36A LOCKED-ROTOR CURRENT OF 3-PHASE 50-HERTZ DESIGN E MEDIUM SQUIRREL-CAGE INDUCTION MOTORS RATED AT 380 VOLTS

The locked-rotor current of Design E single-speed, 3-phase, constant-speed induction motors rated at 380 volts, when measured with rated voltage and frequency impressed and with rotor locked, shall not exceed the following values.

Hp	Locked-Rotor Current, Amperes*	Hp	Locked-Rotor Current, Amperes*
1/2	12	50	623
3/4	15	60	748
1	18	75	935
1-1/2	24	100	1134
2	30	125	1417
3	44	150	1700
5	74	200	2267
7-1/2	111	250	2834
10	136	300	3400
15	204	350	3967
20	272	400	4534
25	340	450	5100
30	408	500	5667
40	499		

*The locked-rotor current of motors designed for voltages other than 380 volts shall be inversely proportional to the voltages.

12.37 TORQUE CHARACTERISTICS OF POLYPHASE SMALL MOTORS

The breakdown torque of a general-purpose polyphase squirrel-cage small motor, with rated voltage and frequency applied, shall be not less than 140 percent of the breakdown torque of a single-phase general-purpose small motor of the same horsepower and speed rating given in 12.32.

NOTE—The speed at breakdown torque is ordinarily much lower in small polyphase motors than in small single-phase motors. Higher breakdown torques are required for polyphase motors so that polyphase and single-phase motors will have interchangeable running characteristics, rating for rating, when applied to normal single-phase motor loads.

12.38 LOCKED-ROTOR TORQUE OF SINGLE-SPEED POLYPHASE SQUIRREL-CAGE MEDIUM MOTORS WITH CONTINOUS RATINGS

12.38.1 The locked-rotor torque of Design A and B, 60- and 50-hertz, single-speed polyphase squirrel-cage medium motors, with rated voltage and frequency applied, shall be not less than the values shown in Table 12-2 which are expressed in percent of full-load torque. For applications involving higher torque requirements, see 12.38.2 and 12.38.3 for locked-rotor torque values for Design C and D motors.

12.38.2 The locked-rotor torque of Design C, 60- and 50-hertz, single-speed polyphase squirrel-cage medium motors, with rated voltage and frequency applied, shall be not less than the values shown in Table 12-3 which are expressed in percent of full-load torque.

12.38.3 The locked-rotor torque of Design D, 60- and 50-hertz, 4-, 6-, and 8-pole, single-speed polyphase squirrel-cage medium motors rated 150 horsepower and smaller, with rated voltage and frequency applied, shall be not less than 275 percent, expressed in percent of full-load torque.

12.38.4 The locked-rotor torque of Design E, 60- and 50-hertz, single-speed polyphase squirrel-cage medium motors, with rated voltage and frequency applied, shall be not less than the following values which are expressed in percent of full-load torque.

		Synchronous Speed, *Rpm			
	60 Hertz	3600	1800	1200	900
Hp	50 Hertz	3000	1500	1000	750
1/2		190	200	170	150
3/4		190	200	170	150
1		180	190	170	150
1-1/2		180	190	160	140
2		180	190	160	140
3		170	180	160	140
5		160	170	150	130
7-1/2		150	160	150	130
10		150	160	150	130
15		140	150	140	120
20		140	150	140	120
25		130	140	140	120
30		130	140	140	120
40		120	130	130	120
50		120	130	130	120
60		110	120	120	110
75		110	120	120	110
100		100	110	110	100
125		100	110	110	100
150		90	100	100	90
200		90	100	100	90
250		80	90	90	90
300		80	90	90	
350		75	75	75	
400		75	75		
450		75	75		
500		75	75		

Copyright National Electrical Manufacturers Association
Provided by IHS under license with NEMA
No reproduction or networking permitted without license from IHS
Not for Resale

Table 12-2 ▲
LOCKED-ROTOR TORQUE OF DESIGN A AND B, 60- AND 50-HERTZ SINGLE-SPEED POLYPHASE SQUIRREL-CAGE MEDIUM MOTORS

	Synchronous Speed, Rpm						
	60 Hertz	3600	1800	1200	900	720	600	514
Hp	50 Hertz	3000	1500	1000	750	...	...	...
1/2		...	...	...	140	140	115	110
3/4		...	...	175	135	135	115	110
1		...	275	170	135	135	115	110
1-1/2		175	250	165	130	130	115	110
2		170	235	160	130	125	115	110
3		160	215	155	130	125	115	110
5		150	185	150	130	125	115	110
7-1/2		140	175	150	125	120	115	110
10		135	165	150	125	120	115	110
15		130	160	140	125	120	115	110
20		130	150	135	125	120	115	110
25		130	150	135	125	120	115	110
30		130	150	135	125	120	115	110
40		125	140	135	125	120	115	110
50		120	140	135	125	120	115	110
60		120	140	135	125	120	115	110
75		105	140	135	125	120	115	110
100		105	125	125	125	120	115	110
125		100	110	125	120	115	115	110
150		100	110	120	120	115	115	...
200		100	100	120	120	115	...	...
250		70	80	100	100	...	...	...
300		70	80	100	...	...	...	...
350		70	80	100	...	...	...	...
400		70	80	...	...	...	...	...
450		70	80	...	...	...	...	...
500		70	80	...	...	...	...	...

Table 12-3
LOCKED-ROTOR TORQUE OF DESIGN C, 60- AND 50-HERTZ SINGLE SPEED POLYPHASE SQUIRREL-CAGE MEDIUM MOTORS

	Synchronous Speed, Rpm			
	60 Hertz	1800	1200	900
Hp	50 Hertz	1500	1000	750
3		...	250	225
5		250	250	225
7-1/2		250	225	200
10		250	225	200
15		225	200	200
20–200, inclusive		200	200	200

Copyright National Electrical Manufacturers Association
Provided by IHS under license with NEMA
No reproduction or networking permitted without license from IHS

Not for Resale

12.39 BREAKDOWN TORQUE OF SINGLE-SPEED POLYPHASE SQUIRREL-CAGE MEDIUM MOTORS WITH CONTINUOUS RATINGS

12.39.1 The breakdown torque of Design A and B, 60- and 50-hertz, single-speed polyphase squirrel-cage medium motors, with rated voltage and frequency applied, shall be not less than the following values which are expressed in percent of full-load torque.

	Synchronous Speed, Rpm						
	60 Hertz	3600	1800	1200	900	720	600	514
Hp	50 Hertz	3000	1500	1000	750	...	...	...
1/2		...	...	...	225	200	200	200
3/4		...	...	275	220	200	200	200
1		...	300	265	215	200	200	200
1-1/2		250	280	250	210	200	200	200
2		240	270	240	210	200	200	200
3		230	250	230	205	200	200	200
5		215	225	215	205	200	200	200
7-1/2		200	215	205	200	200	200	200
10–125, inclusive		200	200	200	200	200	200	200
150		200	200	200	200	200	200	...
200		200	200	200	200	200	...	...
250		175	175	175	175	...	...	...
300–350		175	175	175	...	...	...	...
400–500, inclusive		175	175	...	...	...	...	...

12.39.2 The breakdown torque of Design C, 60- and 50-hertz, single-speed polyphase squirrel-cage medium motors, with rated voltage and frequency applied, shall be not less than the following values which are expressed in percent of full-load torque.

	Synchronous Speed, Rpm			
	60 Hertz	1800	1200	900
Hp	50 Hertz	1500	1000	750
3		...	225	200
5		200	200	200
7-1/2–200, inclusive		190	190	190

Copyright National Electrical Manufacturers Association
Provided by IHS under license with NEMA
No reproduction or networking permitted without license from IHS

Not for Resale

12.39.3 The breakdown torque of Design E, 60- and 50-hertz, single-speed polyphase squirrel-cage medium motors, with rated voltage and frequency applied, shall be not less than the following values which are expressed in percent of full-load torque.

		Synchronous Speed, Rpm			
	60 Hertz	3600	1800	1200	900
Hp	50 Hertz	3000	1500	1000	750
1/2		200	266	170	160
3/4		200	200	170	160
1		200	200	180	170
1-1/2		200	200	190	180
2		200	200	190	180
3		200	200	190	180
5		200	200	190	180
7-1/2		200	200	190	180
10		200	200	180	170
15		200	200	180	170
20		200	200	180	170
25		190	190	180	170
30		190	190	180	170
40		190	190	180	170
50		190	190	180	170
60		180	180	170	170
75		180	180	170	170
100		180	180	170	160
125		180	180	170	160
150		170	170	170	160
200		170	170	170	160
250		170	170	160	160
300		170	170	160	...
350		160	160	160	...
400		160	160	...	...
450		160	160	...	...
500		160	160	...	...

Copyright National Electrical Manufacturers Association
Provided by IHS under license with NEMA
No reproduction or networking permitted without license from IHS

Not for Resale

12.40 PULL-UP TORQUE OF SINGLE-SPEED POLYPHASE SQUIRREL-CAGE MEDIUM MOTORS WITH CONTINUOUS RATINGS

12.40.1 The pull-up torque of Design A and B, single-speed, polyphase squirrel-cage medium motors, with rated voltage and frequency applied, shall be not less than the following values which are expressed in percent of full-load torque.

	Synchronous Speed, Rpm						
	60 Hertz	3600	1800	1200	900	720	600	514
Hp	50 Hertz	3000	1500	1000	750	...	...	...
1/2		...	...	...	100	100	100	100
3/4		...	...	120	100	100	100	100
1		...	190	120	100	100	100	100
1-1/2		120	175	115	100	100	100	100
2		120	165	110	100	100	100	100
3		110	150	110	100	100	100	100
5		105	130	105	100	100	100	100
7-1/2		100	120	105	100	100	100	100
10		100	115	105	100	100	100	100
15		100	110	100	100	100	100	100
20		100	105	100	100	100	100	100
25		100	105	100	100	100	100	100
30		100	105	100	100	100	100	100
40		100	100	100	100	100	100	100
50		100	100	100	100	100	100	100
60		100	100	100	100	100	100	100
75		95	100	100	100	100	100	100
100		95	100	100	100	100	100	100
125		90	100	100	100	100	100	100
150		90	100	100	100	100	100	...
200		90	90	100	100	100	...	...
250		65	75	90	90	...	...	...
300		65	75	90	...	...	...	...
350		65	75	90	...	...	...	...
400		65	75	...	...	...	...	...
450		65	75	...	...	...	...	...
500		65	75	...	...	...	...	...

Copyright National Electrical Manufacturers Association
Provided by IHS under license with NEMA
No reproduction or networking permitted without license from IHS

Not for Resale

12.40.2 The pull-up torque of Design C motors, with rated voltage and frequency applied, shall be not less than the following values which are expressed in percent of full-load torque.

	Pull-up Torque, Percent of Full-Load Torque			
		Synchronous Speed, Rpm		
	60 Hertz	1800	1200	900
Hp	50 Hertz	1500	1000	750
3		...	175	160
5		175	175	160
7-1/2		175	160	140
10		175	160	140
15		160	140	140
20		140	140	140
25		140	140	140
30		140	140	140
40		140	140	140
50		140	140	140
60		140	140	140
75		140	140	140
100		140	140	140
125		140	140	140
150		140	140	140
200		140	140	140

12.40.3 The pull-up torque of Design E, 60- and 50-hertz, single-speed polyphase squirrel-cage medium motors, with rated voltage and frequency applied, shall be not less than the following values which are expressed in percent of full-load torque.

		Synchronous Speed, Rpm			
	60 Hertz	3600	1800	1200	900
Hp	50 Hertz	3000	1500	1000	750
1/2		130	140	120	110
3/4		130	140	120	110
1		120	130	120	110
1-1/2		120	130	110	100
2		120	130	110	100
3		110	120	110	100
5		110	120	110	100
7-1/2		100	110	110	100
10		100	110	110	100
15		100	110	100	90
20		100	110	100	90
25		90	100	100	90
30		90	100	100	90
40		90	100	100	90
50		90	100	100	90
60		80	90	90	80
75		80	90	90	80
100		70	80	80	70
125		70	80	80	70
150		70	80	80	70
200		70	80	80	70
250		60	70	70	70
300		60	70	70	...
350		60	60	60	...
400		60	60	...	...
450		60	60	...	...
500		60	60	...	...

Copyright National Electrical Manufacturers Association
Provided by IHS under license with NEMA
No reproduction or networking permitted without license from IHS

Not for Resale

12.41 BREAKDOWN TORQUE OF POLYPHASE WOUND-ROTOR MEDIUM MOTORS WITH CONTINUOUS RATINGS

The breakdown torques of 60- and 50-hertz, polyphase wound-rotor medium motors, with rated voltage and frequency applied, shall be not less than the following values which are expressed in percent of full-load torque.

	Breakdown Torque, Percent of Full-Load Torque			
	Synchronous Speed, Rpm			
Hp	60 Hertz ▲ 50 Hertz	1800 1500	1200 1000	900 750
1		...	...	250
1½		...	...	250
2		275	275	250
3		275	275	250
5		275	275	250
7½		275	275	225
10		275	250	225
15		250	225	225
20–200, incl.		225	225	225

12.41A ACCELERATION TORQUE OF DESIGN E SINGLE-SPEED POLYPHASE SQUIRREL-CAGE MEDIUM MOTORS WITH CONTINUOUS RATINGS

The developed torque of Design E, single-speed, polyphase squirrel-cage medium motors at any speed up to that at which breakdown occurs, with starting conditions as specified in 12.44.2, shall be higher than the torque obtained from a curve that varies as the square of the speed and is equal to 100 percent of rated full-load torque at rated speed by at least 10 percent of the rated full-load torque.

12.42 TEMPERATURE RISE FOR SMALL AND UNIVERSAL MOTORS

Temperatures for 12.42.1 and 12.42.2 shall be determined in accordance with the following:

a. For single-phase motors—IEEE Std 114
b. For polyphase induction motors—IEEE Std 112

12.42.1 Alternating-Current Small Motors—Motor Nameplates Marked with Insulation System Designation and Ambient Temperature

The temperature rise, above the temperature of the cooling medium, for each of the various parts of the motor shall not exceed the values given in the following table when tested in accordance with the rating, except that for motors having a service factor greater than 1.0, the temperature rise shall not exceed the values given in the following table when tested at the service factor load.

Class of Insulation System (see 1.65)	A	B	F*	H*
Time Rating (see 10.36)				
Temperature Rise (based on a maximum ambient temperature of 40°C), Degrees C				
a. Windings				
1. Open motors other than those given in items a.2 and a.5—resistance or thermocouple	60	80	105	125
2. Open motors with 1.15 or higher service factor—resistance or thermocouple	70	90	115	...
3. Totally enclosed nonventilated motors, including variations thereof—thermocouple or resistance	65	85	110	130
4. Totally enclosed fan-cooled motors, including variations thereof—resistance or thermocouple	65	85	110	135
5. Any motor in a frame smaller than the 42 frame—resistance or thermocouple	65	85	110	135
b. The temperatures attained by cores, squirrel-cage windings, and miscellaneous parts (such as brushholders, brushes, pole tips, etc.) shall not injure the insulation or the machine in any respect.				

* Where a Class F or H insulation system is used, special consisderation should be given to bearing temperatures, lubrication, etc.

(See following page for notes.)

Copyright National Electrical Manufacturers Association
Provided by IHS under license with NEMA
No reproduction or networking permitted without license from IHS

Not for Resale

12.42.2 Universal Motors

The temperature rise, above the temperature of the cooling medium, for each of the various parts of the motor, when tested in accordance with the rating, shall not exceed the values given in the following table.

Class of Insulation System (see 1.65) . . . . . A	B	F*	H*
Time Rating (see 10.36)			
Temperature Rise (method of temperature determination employed as indicated), Degrees C			
a. Windings			
1. Open motors—thermocouple or resistance 60	80	105	125
2. Totally enclosed nonventilated motors, including variations thereof—thermocouple or resistance 65	85	110	130
3. Totally enclosed fan-cooled motors, including variations thereof—resistance or thermocouple 65	85	110	135
b. The temperatures attained by cores, squirrel-cage windings, and miscellaneous parts (such as brushholders, brushes, pole tips, etc.) shall not injure the insulation or the machine in any respect.			

* Where a Class F or H insulation system is used, special consisderation should be given to bearing temperatures, lubrication, etc. See notes.

NOTES

1—Abnormal deterioration of insulation may be expected if the ambient temperature of 40°C is exceeded in regular operation. See Note 3.

2—The foregoing values of temperature rise are based upon operation at altitudes of 3300 feet (1000 meters) or less. For temperature rises for motors intended for operation at altitudes above 3300 feet (1000 meters), see 14.04.

3—The temperature rises given in 12.42.1 and 12.42.2 are based upon a reference ambient temperature of 40°C. Motors intended for use in higher ambient temperatures should have temperature rises not exceeding the value calculated from the approprate formula below, rounding off to the nearest 5 degrees:

For motors given in items a.1 and a.2 of 12.42.1 and item a.1 of 12.42.2 - Temperature rise = 0.9 (T_c-T_a)

For motors given in items a.3, a.4 and a.5 of 12.42.1 and items a.2 and a.3 of 12.42.2 - Temperature rise = 0.965 (T_c-T_a)

Where:

T_a = ambient temperature

T_c = for items a.1, a.4 and a.5 of 12.42.1 and items a.1 and a.3 of 12.42.2 =

105°C for Class A insulation system
130°C for Class B insulation system
155°C for Class F insulation system
180°C for Class H insulation system

T_c = for item a.2 of 12.42.1 =

115°C for Class A insulation system
140°C for Class B insulation system
165°C for Class F insulation system

T_c = for item a.3 of 12.42.1 and item a.2 of 12.42.2 =

105°C for Class A insulation system
130°C for Class B insulation system
155°C for Class F insulation system
175°C for Class H insulation system

When a higher ambient temperature than 40°C is required, preferred values of ambient temperature are 50°C, 65°C, 90°C, and 115°C.

12.43 TEMPERATURE RISE FOR MEDIUM SINGLE-PHASE AND POLYPHASE INDUCTION MOTORS

The temperature rise, above the temperature of the cooling medium, for each of the various parts of the motor shall not exceed the values given in the following table when tested in accordance with the rating, except that for motors having a service factor 1.15 or higher, the temperature rise shall not exceed the values given in the following table when tested at the service factor load. Temperatures shall be determined in accordance with the following.

a. For single-phase motors—IEEE Std 114
b. For polyphase induction motors—IEEE Std 112

Copyright National Electrical Manufacturers Association
Provided by IHS under license with NEMA
No reproduction or networking permitted without license from IHS

Not for Resale

Class of Insulation System (see 1.65 . . . . . A	B	F*	H*†
Time Rating (shall be continuous or any short-time rating given in 10.36)			
Temperature Rise (based on a maximum ambient temperature of 40°C), Degrees C			
a. Windings, by resistance method			
1. Motors with 1.0 service factor other than those given in items a.3 and a.4 . . . 60	80	105	125
2. All motors with 1.15 or higher service factor 70	90	115	. . .
3. Totally-enclosed nonventilated motors with 1.0 service factor 65	85	110	130
4. Motors with encapsulated windings and with 1.0 service factor, all enclosures 65	85	110	. . .
b. The temperatures attained by cores, squirrel-cage windings, and miscellaneous parts (such as brushholders, brushes, pole tips, etc.) shall not injure the insulation or the machine in any respect.			

* Where a Class F or H insulation system is used, special consisderation should be given to bearing temperatures, lubrication, etc.

† This column applies to polyphase induction motors only.

NOTES

1—Abnormal deterioration of insulation may be expected if the ambient temperature of 40°C is exceeded in regular operation. See Note 3.

2—The foregoing values of temperature rise are based upon operation at altitudes of 3300 feet (1000 meters) or less. For temperature rises for motors intended for operation at altitudes above 3300 feet (1000 meters), see 14.04.

3—The temperature rises given in the above table are based upon a reference ambient temperature of 40°C. Motors intended for use in higher ambient temperatures should have temperature rises not exceeding the value calculated from the appropriate formula below, rounded off to the nearest 5 degrees.

For motors given in items a.1 and a.2 —Temperature rise = $0.9\ (T_c - T_a)$

For motors given in items a.3 and a.4—Temperature rise $0.965\ (T_c - T_a)$

Where:

T_a = ambient temperature

T_c = for items a.1 and a.4

105°C for Class A insulation system
130°C for Class B insulation system
155°C for Class F insulation system
180°C for Class H insulation system

for item a.2

115°C for Class A insulation system
140°C for Class B insulation system
165°C for Class F insulation system

T = for item a.3

105°C for Class A insulation system
130°C for Class B insulation system
155°C for Class F insulation system
175°C for Class H insulation system

When a higher ambient temperature than 40°C is required, preferred values of ambient temperature are 50°C, 65°C, 90°C, and 115°C.

12.44 VARIATIONS FROM RATED VOLTAGE AND RATED FREQUENCY

12.44.1 Running

Alternating-current motors shall operate successfully under running conditions at rated load with a variation in the voltage or the frequency up to the following:

a. Plus or minus 10 percent of rated voltage, with rated frequency for induction motors.
b. Plus or minus 6 percent of rated voltage, with rated frequency for universal motors.
c. Plus or minus 5 percent of rated frequency, with rated voltage.
d. A combined variation in voltage and frequency of 10 percent (sum of absolute values) of the rated values, provided the frequency variation does not exceed plus or minus 5 percent of rated frequency, and the voltage variation of universal motors (except fan motors) does not exceed plus or minus 6 percent of rated voltage.

Performance within these voltage and frequency variations will not necessarily be in accordance with the standards established for operation at rated voltage and frequency.

12.44.2 Starting

Medium motors shall start and accelerate to running speed a load which has a torque characteristic and an inertia value not exceeding that listed in 12.54 with the voltage and frequency variations specified in 12.44.1.

The limiting values of voltage and frequency under which a motor will successfully start and accelerate to running speed depend on the margin between the speed--torque curve of the motor at rated voltage and frequency and the speed-torque curve of the load under starting conditions. Since the torque developed by the motor at any speed is approximately proportional to the square of the voltage and inversely proportional to the square of the frequency, it is generally desirable to determine what voltage and frequency variations will actually occur at each installation, taking into account any voltage drop resulting from the starting current drawn by the motor. This information and the torque requirements of the driven machine define the motor-speed-torque curve, at rated voltage and frequency, which is adequate for the application.

Copyright National Electrical Manufacturers Association
Provided by IHS under license with NEMA
No reproduction or networking permitted without license from IHS

Not for Resale

12.45 VOLTAGE UNBALANCE

Alternating-current polyphase motors shall operate successfully under running conditions at rated load when the voltage unbalance at the motor terminals does not exceed 1 percent. Performance will not necessarily be the same as when the motor is operating with a balanced voltage at the motor terminals. (See 14.35.)

12.46 VARIATION FROM RATED SPEED

The variation from the nameplate or published data speed of alternating-current, single-phase and polyphase, medium motors shall not exceed 20 percent of the difference between synchronous speed and rated speed when measured at rated voltage, frequency, and load and with an ambient temperature of 25°C.

12.47 NAMEPLATE AMPERES—ALTERNATING-CURRENT MEDIUM MOTORS

When operated at rated voltage, rated frequency, and rated horsepower output, the input in amperes shall not vary from the nameplate value by more than 10 percent.

12.48 OCCASIONAL EXCESS CURRENT

Polyphase motors having outputs not exceeding 500 horsepower (according to this part) and rated voltages not exceeding 1kV shall be capable of withstanding a current equal to 1.5 times the full load rated current for not less than two minutes when the motor is initially at normal operating temperature.

Repeated overloads resulting in prolonged operation at winding temperatures above the maximum values given by 12.43 will result in reduced insulation life.

12.49 STALL TIME

Polyphase motors having outputs not exceeding 500 horsepower and rated voltage not exceeding 1kV shall be capable of withstanding locked-rotor current for not less than 12 seconds when the motor is initially at normal operating temperatures.

Motors specially designed for inertia loads greater than those in Table 12-5 shall be marked on the nameplate with the permissible stall time in seconds (see 10.40).

12.50 PERFORMANCE OF MEDIUM MOTORS WITH DUAL VOLTAGE RATING (SUGGESTED STANDARD FOR FUTURE DESIGN)

When a medium motor is marked with a broad range or dual voltage the motor shall meet all performance requirements of MG 1 over the marked voltage range.

12.51 SERVICE FACTOR OF ALTERNATING-CURRENT MOTORS

12.51.1 General-Purpose Alternating-Current Motors of the Open Type

When operated at rated voltage and frequency, general purpose alternating-current motors of the open type having a rated temperature rise in accordance with 12.42 for small motors or 12.43 for medium motors shall have a service factor in accordance with Table 12-4 (see 14.36).

12.51.2 Other Motors

When operated at rated voltage and frequency, other open-type and all totally enclosed alternating-current motors having a rated temperature rise in accordance with 12.43 shall have a service factor of 1.0.

Table 12-4
SERVICE FACTORS

	Service Factor							
	Synchronous Speed, Rpm							
Hp	3600	1800	1200	900	720	600	514	
1/20	1.4	1.4	1.4	1.4	...	...	...	
1/12	1.4	1.4	1.4	1.4	...	...	...	
1/8	1.4	1.4	1.4	1.4	...	...	...	Small Motors
1/6	1.35	1.35	1.35	1.35	...	...	...	
1/4	1.35	1.35	1.35	1.35	...	...	...	
1/3	1.35	1.35	1.35	1.35	...	...	...	
1/2	1.25	1.25	1.25	1.15*	...	...	...	
3/4	1.25	1.25	1.15*	1.15*	...	...	...	
1	1.25	1.15*	1.15*	1.15*	...	...	...	Medium Motors
1-1/2–125	1.15*	1.15*	1.15*	1.15*	1.15*	1.15*	1.15*	
150	1.15*	1.15*	1.15*	1.15*	1.15*	1.15*	...	
200	1.15*	1.15*	1.15*	1.15*	1.15*	...	...	

*In the case of polyphase squirrel-cage motors, these service factors apply only to Design A, B, and C motors.

Copyright National Electrical Manufacturers Association
Provided by IHS under license with NEMA
No reproduction or networking permitted without license from IHS

Not for Resale

In those applications requiring an overload capacity, the use of a higher horsepower rating, as given in 10.32.4, is recommended to avoid exceeding the temperature rises for the class of insulation system used and to provide adequate torque capacity.

12.52 OVERSPEEDS FOR MOTORS

12.52.1 Squirrel-Cage and Wound-Rotor Motors

Squirrel-cage and wound-rotor induction motors, except crane motors, shall be so constructed that, in an emergency not to exceed 2 minutes, they will withstand without mechanical injury overspeeds above synchronous speed in accordance with the following.

Hp	Synchronous Speed, Rpm	Overspeed, Percent of Synchronous Speed
200 and smaller	1801 and over	25
	1201 to 1800	25
	1200 and below	50
250–500, incl.	1801 and over	20
	1800 and below	25

12.52.2 Alternating-Current Series and Universal Motors

Alternating-current series and universal motors shall be so constructed that, in an emergency not to exceed 2 minutes, they will withstand without mechanical injury an overspeed of 10 percent above the no-load speed[1] at rated voltages.

12.53 MACHINE SOUND (MEDIUM INDUCTION MOTORS)

12.53.1 Sound Quality

Sound quality is determined by the distribution of effective sound intensities as a function of frequency. It plays a significant role in determining how acceptable the sound is to the human ear.

Although the overall A-weighted sound does not completely define sound acceptability because machines with the same overall decibel sound level may have a different sound quality, it does provide a quantitative measure of loudness and hearing damage potential. It may be necessary in some cases to describe the sound profile in more detail. In such cases, the manufacturer should be consulted.

12.53.2 Sound Measurement

Machine sound should be measured in accordance with IEEE Std 85.

Motor sound tests should be taken at no load so that the motor sound can be isolated from other sound sources.

It should be recognized that decibel readings are not exact and are subject to many external influences. For further information see NEMA Standards Publication MG 3.

[1] For motors which are integrally attached to loads that cannot become accidentally disconnected, the words "no-load speed" shall be interpreted to mean the lightest load condition possible with the load.

Copyright National Electrical Manufacturers Association
Provided by IHS under license with NEMA
No reproduction or networking permitted without license from IHS
Not for Resale

12.53.3 Sound Power Levels of Polyphase Squirrel-Cage Induction Motors

The no-load sound power levels of Design A, B, and C polyphase squirrel-cage induction motors generally do not exceed the values given in the previous table when measured in accordance with IEEE Std 85.

Frame Desgnation	Synchronous Speed, Rpm	Overall Sound Power Level, Decibels, A-Weighted (Reference = 10^{12} Watts) Dripproof	Totally Enclosed Fan-Cooled
143T, 145T	3600	76	85
182T, 184T	3600	80	88
213T, 215T	3600	82	91
254T, 256T	3600	84	94
284T, 286T	3600	86	94 ▲
324T, 326T	3600	89	100
364T, 365T	3600	94	101
404T, 405T	3600	98	102
444T, 445T	3600	101	104
143T, 145T	1800	70	70
182T, 184T	1800	72	74
213T, 215T	1800	76	79
254T, 256T	1800	80	84
284T, 286T	1800	80	88
324T, 326T	1800	84	89
364T, 365T	1800	86	95
404T, 405T	1800	89	98
444T, 445T ▲	1800	93	100 ▲
143T, 145T	1200	65	64
182T, 184T	1200	67	67
213T, 215T	1200	72	71
254T, 256T	1200	76	75
284T, 286T	1200	81	80
324T, 326T	1200	83	83
364T, 365T	1200	86	86
404T, 405T	1200	88	90
444T, 445T	1200	91	94
143T, 145T	900	67	67
182T, 184T	900	69	69
213T, 215T	900	70	72
254T, 256T	900	73	76
284T, 286T	900	76	80
324T, 326T	900	79	83
364T, 365T	900	81	86
404T, 405T	900	84	89
444T, 445T	900	87	93

12.54 NUMBER OF STARTS

12.54.1 *Squirrel-cage induction motors having horsepower ratings given in 10.32.4 and performance characteristics in accordance with this Part 12*[1] shall be capable of accelerating without injurious heating load Wk^2 referred to the motor shaft equal to or less than the values listed in Table 12-5 under the following conditions.

a. Applied voltage and frequency in accordance with 12.44.
b. During the accelerating period, the connected load torque is equal to or less than a torque which varies as the square of the speed and is equal to 100 percent of rated-load torque at rated speed.
c. Two starts in succession (coasting to rest between starts) with the motor initially at the ambient temperature or one start with the motor initially at a temperature not exceeding its rated load operating temperature.

12.54.2 If the starting conditions are other than those stated in 12.51.1, the motor manufacturer should be consulted.

12.54.3 When additional starts are required, it is recommended that none be made until all conditions affecting operation have been thoroughly investigated and the apparatus examined for evidence of excessive heating. It should be recognized that the number of starts should be kept to a minimum since the life of the motor is affected by the number of starts.

12.55 ROUTINE TESTS FOR POLYPHASE MEDIUM INDUCTION MOTORS

12.55.1 The method of testing polyphase induction motors shall be in accordance with IEEE Std 112.

12.55.2 Typical tests which may be made on motors completely assembled in the factory and furnished with shaft and complete set of bearings are as follows.

a. Measurement of winding resistance
b. No-load readings of current and speed at normal voltage and frequency. On 50 hertz motors, these readings may be taken at 60 hertz.
c. Current input at rated frequency with rotor at standstill for squirrel-cage motors. This may be taken single-phase or polyphase at rated or reduced voltage. (When this test is made single-phase, the polyphase values of a duplicate machine should be given in any report.) On 50 hertz motors, these readings may be taken at 60 hertz.

[1] Locked-rotor torque in accordance with 12.38.1, breakdown torque in accordance with 12.39.1, Class A or B insulation system with temperature rise in accordance with 12.43, and service factor in accordance with 12.51.2.

Copyright National Electrical Manufacturers Association
Provided by IHS under license with NEMA
No reproduction or networking permitted without license from IHS
Not for Resale

Table 12-5
SQUIRREL-CAGE INDUCTION MOTORS

	Synchronous Speed, Rpm						
	3600	1800	1200	900	720	600	514
Hp	Load Wk^2 (Exlusive of Motor Wk^2), $Lb\text{-}Ft^2$						
1	...	5.8	15	31	53	82	118
1½	1.8	8.6	23	45	77	120	174
2	2.4	11	30	60	102	158	228
3	3.5	17	44	87	149	231	335
5	5.7	27	71	142	242	375	544
7½	8.3	39	104	208	356	551	798
10	11	51	137	273	467	723	1048
15	16	75	200	400	685	1061	1538
20	21	99	262	525	898	1393	2018
25	26	122	324	647	1108	1719	2491
30	31	144	384	769	1316	2042	2959
40	40	189	503	1007	1725	2677	3881
50	49	232	620	1241	2127	3302	4788
60	58	275	735	1473	2524	3819	5680
75	71	338	904	1814	3111	4831	7010
100	92	441	1181	2372	4070	6320	9180
125	113	542	1452	2919	5010	7790	11310
150	133	640	1719	3456	5940	9230	...
200	172	831	2238	4508	7750	...	...
250	210	1017	2744	5540	...	...	...
300	246	1197	3239	...	...	...	...
350	281	1373	3723	...	...	...	...
400	315	1546	...	...	...	...	...
450	349	1714	...	...	...	...	...
500	381	1880	...	...	...	...	...

d. Measurement of open-circuit voltage ratio on wound-rotor motors
e. High-potential test in accordance with 3.01 and 12.03

12.55.3 Typical tests which may be made on all motors not completely assembled in the factory are as follows.

a. Measurement of winding resistance
b. High-potential test in accordance with 3.01 and 12.03

12.56 THERMAL PROTECTION OF MEDIUM MOTORS

The protector in a thermally protected motor shall limit the winding temperature and the ultimate trip current as follows.

12.56.1 Winding Temperature

12.56.1.1 RUNNING LOAD

When a motor marked "Thermally Protected" is running at the maximum continuous load which it can carry without causing the protector to open the circuit, the temperature of the windings shall not exceed the following.

Insulation System Class	Temperature, Degrees C
A	140
B	165
F	190
H	215

Tests shall be conducted at any ambient temperature within the range of 10°C to 40°C.

The temperature of the windings shall be measured by the resistance method except that, for motors rated 15 horsepower and smaller, the temperature shall alternatively be permitted to be measured by the thermocouple method.

Short-time rated motors and motors for intermittent duty shall be permitted to be run at no load and reduced voltage,

Copyright National Electrical Manufacturers Association
Provided by IHS under license with NEMA
No reproduction or networking permitted without license from IHS

Not for Resale

if necessary, for a continuous running test to verify that the protector limits the temperatures to those given in the foregoing table.

12.56.1.2 LOCKED ROTOR

When a motor marked "Thermally Protected" is under locked-rotor conditions, the thermal protector shall cycle to limit the winding temperature to the values given in Table 12-7.

The test for motors with automatic-reset thermal protectors shall be run until temperature peaks are constant or for 72 hours, whichever is shorter.

The test for motors with manual-reset thermal protectors shall be 10 cycles, the protector being reclosed as quickly as possible after it opens. If ten cycles are completed in less than 1 hour, only the "during first hour" limits given in Table 12-7 apply.

12.56.2 Trip Current

A motor rated more than 1 horsepower and marked "Thermally Protected" shall have an ultimate trip current, based on a 40°C ambient temperature, not in excess of the following percentages of motor full-load currents:

Motor Full-load Amperes	Trip Current as a Percent of Motor Full-load Current
9.0 and less	170
Over 9.0 but not over 20.0	156
Over 20.0	140

Dual-voltage motors shall comply with the ultimate trip current requirements for both voltages.

12.57 OVERTEMPERATURE PROTECTION OF MEDIUM MOTORS NOT MEETING THE DEFINITION OF "THERMALLY PROTECTED"

Motors rated above 1 horsepower and marked "OVER TEMP PROT-" are provided with winding overtemperature protection devices or systems which do not meet the definition of "Thermally Protected."

The motors marked "OVER TEMP PROT-" shall be followed by the numeral 1, 2, or 3 stamped in the blank space to indicate the type of winding overtemperature protection provided. For each type, the winding overtemperature protector shall limit the temperature of the winding as follows.

12.57.1 Type 1—Winding Running and Locked Rotor Overtemperature Protection

12.57.1.1 WINDING RUNNING TEMPERATURE

When the motor is marked "OVER TEMP PROT-1" and is running at the maximum continuous load which it can carry without causing the winding over temperature protector to operate, the temperature of the windings shall not exceed the temperature shown in Table 12-6.

The temperature of the windings shall be measured by the resistance method except that, for motors rated 15 horsepower and smaller, the temperature shall be permitted to be measured by the thermocouple method.

Table 12-6
WINDING TEMPERATURES

Insulation System Class	Maximum Winding Temperature, Degrees C
A	140
B	165
F	190
H	215

Table 12-7
WINDING TEMPERATURE UNDER LOCKED-ROTOR CONDITIONS, DEGREES C

	Maximum Temperature, Degrees C*				Average Temperature,**Degrees C*			
	Insulation System Class				Insulation System Class			
Type of Protector	A	B	F	H	A	B	F	H
Automatic reset								
During first hour	200	225	250	275	...	...	...	...
After first hour	175	200	225	250	150	175	200	225
Manual reset								
During first hour	200	225	250	275	...	...	...	...
After first hour	175	200	225	250	...	...	...	...

*Test shall be permitted to be conducted at any ambient temperature within the range of 10°C to 40°C.

**The average temperature is the average of the average peak and average reset winding temperatures. The average temperature shall be within limits during both the second and last hours of the test.

Copyright National Electrical Manufacturers Association
Provided by IHS under license with NEMA
No reproduction or networking permitted without license from IHS

Not for Resale

12.57.1.2 WINDING LOCKED-ROTOR TEMPERATURE

In addition, when the motor is marked "OVER TEMP PROT 1" and is under locked-rotor conditions, the winding overtemperature protector shall limit the temperature of the windings to the values shown in Table 12-7.

12.57.2 Type 2—Winding Running Overtemperature Protection

When the motor is marked "OVER TEMP PROT 2" and is running at the maximum continuous load which it can carry without causing the winding overtemperature protector to operate, the temperature of the windings shall not exceed the temperature shown in Table 12-6.

When the motor is so marked, lock-rotor protection is not provided by the winding overtemperature protector.

12.57.3 Type 3—Winding Overtemperature Protection, Nonspecific Type

When the motor is marked "OVER TEMP PROT 3," the motor manufacturer shall be consulted for details of protected conditions or winding temperatures, or both.

12.58 EFFICIENCY

12.58.1 Determination of Motor Efficiency and Losses

Efficiency and losses shall be determined in accordance with IEEE Std 112 or Canadian Standards Association Standard C390. The efficiency shall be determined at rated output, voltage, and frequency.

Unless otherwise specified, horizontal polyphase, squirrel-cage medium motors rated 1 to 125 horsepower shall be tested by dynamometer (Method B)[1] as described in Section 6.4 of IEEE Std 112. Motor efficiency shall be calculated using Form B of IEEE Std 112 or the equivalent C390 calculation procedure. Vertical motors of this horsepower range shall also be tested by Method B if bearing construction permits; otherwise they shall be tested by segregated losses (Method E)[2] as described in Section 6.6 of IEEE Std 112, including direct measurement of stray-loss load.

Polyphase motors larger than 125 horsepower shall be tested in accordance with IEEE Std 112 with stray-load loss determined by direct measurement or indirect measurement (test loss minus conventional loss.)

The following losses shall be included in determining the efficiency.

a. Stator I^2R
b. Rotor I^2R
c. Core loss
d. Stray load loss
e. Friction and windage loss[3]
f. Brush contact loss of wound-rotor machines

Power required for auxiliary items, such as external pumps or fans, that are necessary for the operation of the motor shall be stated separately.

In determining I^2R losses, the resistance of each winding shall be corrected to a temperature equal to an ambient temperature of 25°C plus the observed rated load temperature rise measured by resistance. When the rated load temperature rise has not been measured, the resistance of the winding shall be corrected to the following temperature.

Class of Insulation System	Temperature, Degrees C
A	75
B	95
F	115
H	130

This reference temperature shall be used for determining I^2R losses at all loads. If the rated temperature rise is specified as that of a lower class of insulation system, the temperature for resistance correction shall be that of the lower insulation class.

12.58.2 Efficiency of Polyphase Squirrel-Cage Medium Motors with Continuous Ratings

The full-load efficiency of Design A, B, and E single-speed polyphase squirrel-cage medium motors in the range of 1 through 250 horsepower for frames assigned in accordance with NEMA Standards Publication No. MG 13, above 250 horsepower up to and including 500 horsepower, and equivalent Design C ratings shall be identified on the nameplate by a nominal efficiency selected from the Nominal Efficiency column in Table 12-8 which shall be not greater than the average efficiency of a large population of motors of the same design.

---

[1] CSA Std C390 Method 1.

[2] CSA Std C390 Method 2.

[3] In the case of motors which are furnished with thrust bearings, only that portion of the thrust bearing loss produced by the motor itself shall be included in the efficiency calculation. Alternatively, a calculated value of efficiency, including bearing loss due to external thrust load, shall be permitted to be specified.
In the case of motors which are furnished with less than a full set of bearings, friction and windage losses which are representative of the actual installation shall be determined by (1) calculation or (2) experience with shop test bearings and shall be included in the efficiency calculations.

Copyright National Electrical Manufacturers Association
Provided by IHS under license with NEMA
No reproduction or networking permitted without license from IHS
Not for Resale

Table 12-8
EFFICIENCY LEVELS

Column A Nominal Efficiency	Column B Minimum Efficiency Based on 20% Loss Difference
99.0	98.8
98.9	98.7
98.8	98.6
98.7	98.5
98.6	98.4
98.5	98.2
98.4	98.0
98.2	97.8
98.0	97.6
97.8	97.4
97.6	97.1
97.4	96.8
97.1	96.5
96.8	96.2
96.5	95.8
96.2	95.4
95.8	95.0
95.4	94.5
95.0	94.1
94.5	93.6
94.1	93.0
93.6	92.4
93.0	91.7
92.4	91.0
91.7	90.2
91.0	89.5
90.2	88.5
89.5	87.5
88.5	86.5
87.5	85.5
86.5	84.0
85.5	82.5
84.0	81.5
82.5	80.0
81.5	78.5
80.0	77.0
78.5	75.5
77.0	74.0
75.5	72.0
74.0	70.0
72.0	68.0
70.0	66.0
68.0	64.0
66.0	62.0
64.0	59.5
62.0	57.5
59.5	55.0
57.5	52.5
55.0	50.5
52.5	48.0
50.5	46.0

The efficiency shall be identified on the nameplate by the caption "NEMA Nominal Efficiency" or "NEMA Nom. Eff."

The full-load efficiency, when operating at rated voltage and frequency, shall be not less than the minimum value indicated in Column B of Table 12-8 associated with the nominal value in Column A.

Variations in materials, manufacturing processes, and tests result in motor-to-motor efficiency variations for a given motor design; the full-load efficiency for a large population of motor of a single design is not a unique efficiency but rather a band of efficiency. Therefore, Table 12-8 has been established to indicate a logical series of nominal motor efficiencies and the minimum associated with each nominal. The nominal efficiency represents a value which should be used to compute the energy consumption of a motor or group of motors.

12.59 EFFICIENCY LEVELS OF ENERGY EFFICIENT POLYPHASE SQUIRREL-CAGE INDUCTION MOTORS

The nominal full-load efficiency of polyphse squirrel-cage induction motors rated 600 volts or less determined in accordance with 12.58.1, identified on the nameplate in accordance with 12.58.2, and having a corresponding minimum efficiency in accordance with Column B of Table 12-8 shall equal or exceed the values listed in Table 12-10 for the motor to be classified as "energy efficient."

12.60 EFFICIENCY LEVEL OF DESIGN E POLYPHASE SQUIRREL-CAGE INDUCTION MOTORS

The nominal full-load efficiency of Design E polyphase squirrel-cage induction motors rated 600 volts or less determined in accordance with 12.58.1, identified on the nameplate in accordance with 12.58.2, and having a minimum efficiency in accordance with Column B of Table 12-8 shall equal or exceed the values listed in Table 12-11.

12.61 REPORT OF TEST FOR TESTS ON INDUCTION MOTORS

For reporting routine tests on induction motors, see IEEE Standard 112, Appendix A.

12.62 MACHINE WITH ENCAPSULATED OR SEALED WINDINGS—CONFORMANCE TESTS

An alternating-current squirrel-cage machine with encapsulated or sealed windings shall be capable of passing the tests listed below.

After the stator winding is completed, join all leads together leaving enough length to avoid creepage to terminals and perform the following tests in the sequence indicated.

a. The encapsulated or sealed stator shall be tested while all insulated parts are submerged in a tank of water containing a wetting agent. The wetting agent shall be non-ionic and shall be added in a proportion sufficient to reduce the surface tension of water to a value of 31 dyn/cm (3.1μN/m) or less at 25°C.

Copyright National Electrical Manufacturers Association
Provided by IHS under license with NEMA
No reproduction or networking permitted without license from IHS

Not for Resale

Table 12-9 intentionally deleted

Copyright National Electrical Manufacturers Association
Provided by IHS under license with NEMA
No reproduction or networking permitted without license from IHS

Not for Resale

Table 12-10 ▲
FULL-LOAD EFFICIENCIES OF ENERGY EFFICIENT MOTORS

OPEN MOTORS

	2 POLE		4 POLE		6 POLE		8 POLE	
Hp	Nominal Efficiency	Minimum Efficiency	Nominal Efficiency	Minimum Efficiency	Nominal Efficiency	Minimum Efficiency	Nominal Efficiency	Minimum Efficiency
1.0	—	—	82.5	80.0	80.0	77.0	74.0	70.0
1.5	82.5	80.0	84.0	81.5	84.0	81.5	75.5	72.0
2.0	84.0	81.5	84.0	81.5	85.5	82.5	85.5	82.5
3.0	84.0	81.5	86.5	84.0	86.5	84.0	86.5	84.0
5.0	85.5	82.5	87.5	85.5	87.5	85.5	87.5	85.5
7.5	87.5	85.5	88.5	86.5	88.5	86.5	88.5	86.5
10.0	88.5	86.5	89.5	87.5	90.2	88.5	89.5	87.5
15.0	89.5	87.5	91.0	89.5	90.2	88.5	89.5	87.5
20.0	90.2	88.5	91.0	89.5	91.0	89.5	90.2	88.5
25.0	91.0	89.5	91.7	90.2	91.7	90.2	90.2	88.5
30.0	91.0	89.5	92.4	91.0	92.4	91.0	91.0	89.5
40.0	91.7	90.2	93.0	91.7	93.0	91.7	91.0	89.5
50.0	92.4	91.0	93.0	91.7	93.0	91.7	91.7	90.2
60.0	93.0	91.7	93.6	92.4	93.6	92.4	92.4	91.0
75.0	93.0	91.7	94.1	93.0	93.6	92.4	93.6	92.4
100.0	93.0	91.7	94.1	93.0	94.1	93.0	93.6	92.4
125.0	93.6	92.4	94.5	93.6	94.1	93.0	93.6	92.4
150.0	93.6	92.4	95.0	94.1	94.5	93.6	93.6	92.4
200.0	94.5	93.6	95.0	94.1	94.5	93.6	93.6	92.4
250.0	94.5	93.6	95.4	94.5 ▲	95.4	94.5	94.5	93.6
300.0	95.0	94.1	95.4	94.5	95.4	94.5	—	—
350.0	95.0	94.1	95.4	94.5	95.4	94.5	—	—
400.0	95.4	94.5	95.4	94.5	—	—	—	—
450.0	95.8	95.0	95.8	95.0	—	—	—	—
500.0	95.8	95.0	95.8	95.0	—	—	—	—

ENCLOSED MOTORS

	2 POLE		4 POLE		6 POLE		8 POLE	
Hp	Nominal Efficiency	Minimum Efficiency	Nominal Efficiency	Minimum Efficiency	Nominal Efficiency	Minimum Efficiency	Nominal Efficiency	Minimum Efficiency
1.0	75.5	72.0	82.5	80.0	80.0	77.0	74.0	70.0
1.5	82.5	80.0	84.0	81.5	85.5	82.5	77.0	74.0
2.0	84.0	81.5	84.0	81.5	86.5	84.0	82.5	80.0
3.0	85.5	82.5	87.5	85.5	87.5	85.5	84.0	81.5
5.0	87.5	85.5	87.5	85.5	87.5	85.5	85.5	82.5
7.5	88.5	86.5	89.5	87.5	89.5	87.5	85.5	82.5
10.0	89.5	87.5	89.5	87.5	89.5	87.5	88.5	86.5
15.0	90.2	88.5	91.0	89.5	90.2	88.5	88.5	86.5
20.0	90.2	88.5	91.0	89.5	90.2	88.5	89.5	87.5
25.0	91.0	89.5	92.4	91.0	91.7	90.2	89.5	87.5
30.0	91.0	89.5	92.4	91.0	91.7	90.2	91.0	89.5
40.0	91.7	90.2	93.0	91.7	93.0	91.7	91.0	89.5
50.0	92.4	91.0	93.0	91.7	93.0	91.7	91.7	90.2
60.0	93.0	91.7	93.6	92.4	93.6	92.4	91.7	90.2
75.0	93.0	91.7	94.1	93.0	93.6	92.4	93.0	91.7

Continued

Copyright National Electrical Manufacturers Association
Provided by IHS under license with NEMA
No reproduction or networking permitted without license from IHS

Not for Resale

Table 12-10 *continued*

	ENCLOSED MOTORS							
	2 POLE		4 POLE		6 POLE		8 POLE	
Hp	Nominal Efficiency	Minimum Efficiency	Nominal Efficiency	Minimum Efficiency	Nominal Efficiency	Minimum Efficiency	Nominal Efficiency	Minimum Efficiency
100.0	93.6	92.4	94.5	93.6	94.1	93.0	93.0	91.7
125.0	94.5	93.6	94.5	93.6	94.1	93.0	93.6	92.4
150.0	94.5	93.6	95.0	94.1	95.0	94.1	93.6	92.4
200.0	95.0	94.1	95.0	94.1	95.0	94.1	94.1	93.0
250.0	95.4	94.5	95.0	94.1	95.0	94.1	94.5	93.6
300.0	95.4	94.5	95.4	94.5	95.0	94.1	—	—
350.0	95.4	94.5	95.4	94.5	95.0	94.1	—	—
400.0	95.4	94.5	95.4	94.5	—	—	—	—
450.0	95.4	94.5	95.4	94.5	—	—	—	—
500.0	95.4	94.5	95.8	95.0	—	—	—	—

Table 12-11 ▲
FULL-LOAD EFFICIENCIES OF DESIGN E MOTORS

	OPEN MOTORS							
	2 POLE		4 POLE		6 POLE		8 POLE	
Hp	Nominal Efficiency	Minimum Efficiency	Nominal Efficiency	Minimum Efficiency	Nominal Efficiency	Minimum Efficiency	Nominal Efficiency	Minimum Efficiency
0.75	—	—	—	—	82.5	80.0	—	—
1.0	—	—	86.5	84.0	84.0	81.5	78.5	75.5
1.5	86.5	84.0	87.5	85.5	87.5	85.5	81.5	78.5
2.0	87.5	85.5	87.5	85.5	88.5	86.5	88.5	86.5
3.0	87.5	85.5	89.5	87.5	89.5	87.5	89.5	87.5
5.0	88.5	86.5	90.2	88.5	90.2	88.5	90.2	88.5
7.5	90.2	88.5	91.0	89.5	91.0	89.5	91.0	89.5
10.0	91.0	89.5	91.7	90.2	92.4	91.0	91.7	90.2
15.0	91.0	89.5	92.4	91.0	92.4	91.0	91.7	90.2
20.0	92.4	91.0	93.0	91.7	92.4	91.0	92.4	91.0
25.0	93.0	91.7	93.6	92.4	93.6	92.4	92.4	91.0
30.0	93.0	91.7	94.1	93.0	93.6	92.4	93.0	91.7
40.0	93.6	92.4	94.5	93.6	94.5	93.6	93.0	91.7
50.0	93.6	92.4	95.4	94.5	94.5	93.6	93.6	92.4
60.0	93.6	92.4	95.4	94.5	95.0	94.1	94.1	93.0
75.0	94.5	93.6	95.4	94.5	95.4	94.5	95.0	94.1
100.0	95.0	94.1	95.4	94.5	95.4	94.5	95.0	94.1
125.0	95.4	94.5	95.4	94.5	95.4	94.5	95.0	94.1
150.0	95.8	95.0	95.8	95.0	95.8	95.0	95.4	94.5
200.0	95.8	95.0	95.8	95.0	95.8	95.0	95.4	94.5
250.0	95.8	95.0	96.2	95.4	96.2	95.4	95.8	95.0
300.0	96.2	95.4	96.2	95.4	96.2	95.4	—	—
350.0	96.2	95.4	96.5	95.8	96.5	95.8	—	—
400.0	96.5	95.8	96.5	95.8	—	—	—	—
450.0	96.5	95.8	96.8	96.2	—	—	—	—
500.0	96.8	96.2	96.8	96.2	—	—	—	—

Continued

Copyright National Electrical Manufacturers Association
Provided by IHS under license with NEMA
No reproduction or networking permitted without license from IHS
Not for Resale

Table 12-11 *continued*

	ENCLOSED MOTORS							
	2 POLE		4 POLE		6 POLE		8 POLE	
Hp	Nominal Efficiency	Minimum Efficiency	Nominal Efficiency	Minimum Efficiency	Nominal Efficiency	Minimum Efficiency	Nominal Efficiency	Minimum Efficiency
0.75	—	—	—	—	82.5	80.0	—	—
1.0	—	—	86.5	84.0	84.0	81.5	78.5	75.5
1.5	86.5	84.0▲	87.5	85.5	86.5	84.0	82.5	80.0
2.0	87.5	85.5▲	87.5	85.5	88.5	86.5	86.5	84.0
3.0	88.5	86.5▲	88.5	86.5	89.5	87.5	88.5	86.5
5.0	90.2	88.5	89.5	87.5	90.2	88.5	89.5	87.5
7.5	91.0	89.5	90.2	88.5	91.7	90.2	89.5	87.5
10.0	91.0	89.5	91.0	89.5	92.4	91.0	91.0	89.5
15.0	91.7	90.2	92.4	91.0	92.4	91.0	91.0	89.5
20.0	92.4	91.0	93.0	91.7	92.4	91.0	91.7	90.2
25.0	93.0	91.7	93.6	92.4	93.6	92.4	91.7	90.2
30.0	93.6	92.4	94.1	93.0	93.6	92.4	92.4	91.0
40.0	94.1	93.0	94.5	93.6	94.1	93.0	92.4	91.0
50.0	94.5	93.6	95.0	94.1	94.1	93.0	93.0	91.7
60.0	94.5	93.6	95.0	94.1	95.0	94.1	93.0	91.7
75.0	94.5	93.6	95.4	94.5	95.0	94.1	93.6	92.4
100.0	95.0	94.1	95.4	94.5	95.4	94.5	93.6	92.4
125.0	95.4	94.5	95.8	95.0	95.4	94.5	94.5	93.6
150.0	95.8	95.0	95.8	95.0	95.8	95.0	94.5	93.6
200.0	96.2	95.4	96.2	95.4	96.2	95.4	95.0	94.1
250.0	96.2	95.4	96.2	95.4	96.2	95.4	95.4	94.5
300.0	96.2	95.4	96.2	95.4	96.2	95.4	—	—
350.0	96.5	95.8	96.5	95.8	96.5	95.8	—	—
400.0	96.5	95.8	96.5	95.8	—	—	—	—
450.0	96.5	95.8	96.8	96.2	—	—	—	—
500.0	96.8	96.2	96.8	96.2	—	—	—	—

b. Using 500 volts direct current, take a 10-minute insulation resistance measurement. The insulation resistance value shall be not less than the minimum recommended in IEEE Std 43. (Insulation resistance in megohms ≥ machine rated kilovolts plus 1.)
c. Subject the winding to a 60-hertz high potential test of 1.15 times the rated line-to-line rms voltage for 1 minute. Water must be at ground potential during this test.
d. Using 500 volts direct current, take a 1-minute insulation resistance measurement. The insulation resistance value shall not be less than the minimum recommended in IEEE Std 43. (Insulation resistance in megohms ≥ machine rated kilovolts plus 1.)
e. Remove winding from water, rinse if necessary, dry, and apply other tests as may be required.

12.63 MACHINE WITH MOISTURE RESISTANT WINDINGS—CONFORMANCE TEST

An alternating-current squirrel-cage machine with moisture resistant windings shall be capable of passing the following test.

a. After the stator is completed, join all leads together and place it in a chamber with 100 percent relative humidity and 40°C temperature for 168 hours, during which time visible condensation shall be standing on the winding.
b. After 168 hours remove the stator winding from the chamber and within 5 minutes using 500 volt direct current take a 1 minute insulation resistance measurement following the procedure as outlined in IEEE Std 43. The insulation resistance value shall not be less than 1.5 megohms.

NOTES

1—The above test is recommended as a test on a representative sample or prototype and should not be construed as a production test.

2—The sealed winding conformance test in 20.49 shall be permitted to be used in place of this test procedure to demonstrate moisture resistance of a prototype.

Copyright National Electrical Manufacturers Association
Provided by IHS under license with NEMA
No reproduction or networking permitted without license from IHS

Not for Resale

This page intentionally left blank.

Copyright National Electrical Manufacturers Association
Provided by IHS under license with NEMA
No reproduction or networking permitted without license from IHS

Not for Resale

Section II
SMALL (FRACTIONAL) AND MEDIUM (INTEGRAL) MACHINES
Part 12
TESTS AND PERFORMANCE—DC SMALL AND MEDIUM MOTORS

12.0 SCOPE

The standards in this Part 12 of Section II cover direct-current motors built in frames with continuous dripproof ratings, or equivalent capacities, up to and including 1.25 horsepower per rpm, open type.

12.64 TEST METHODS

Tests to determine performance characteristics shall be made in accordance with IEEE Std 113.

12.65 TEST POWER SUPPLY

12.65.1 Small Motors

Performance tests on direct-current small motors intended for use on adjustable-voltage rectifier power supplies shall be made with an adjustable power supply, derived from a 60-hertz source, that will provide rated voltage and rated form factor at rated load.

12.65.2 Medium Motors

See Figure 12-1.

12.65.2.1 LOW-RIPPLE POWER SUPPLIES—POWER SUPPLY A

The rating of direct-current motors intended for use on low-ripple power supplies shall be based on the use of one of the following test power supplies.

a. Direct-current generator
b. Battery
c. A polyphase rectifier power supply having more than six pulses per cycle and 15 percent or less phase control
d. Any of the power supplies listed in 12.65.2.2 provided sufficient series inductance is used to obtain 6 percent, or less, peak-to-peak armature current ripple.

12.65.2.2 OTHER RECTIFIER POWER SUPPLIES

The rating of direct-current motors intended for use on rectifier power supplies other than those described in 12.65.2.1 shall be based on the use of a test power supply having the characteristics given in 12.65.2.3 and defined in 12.65.2.4.

12.65.2.3 POWER SUPPLY CHARACTERISTICS

12.65.2.3.1 Input

a. Single phase or three phase, as specified
b. Specified frequency. Unless otherwise specified, the frequency shall be 60 hertz
c. Specified alternating-current voltage, plus 2 percent, minus 0 percent
d. Power source shall not introduce significant series impedance.

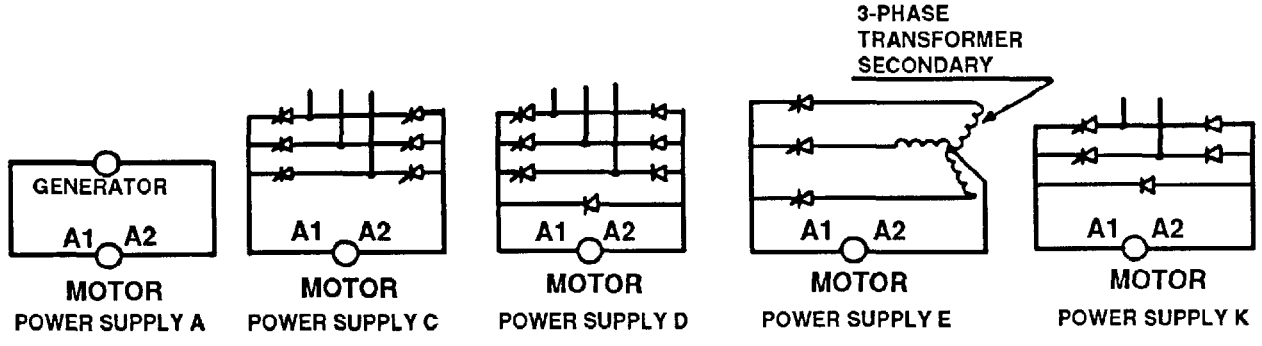

Figure 12-1
TEST POWER SUPPLIES

Copyright National Electrical Manufacturers Association
Provided by IHS under license with NEMA
No reproduction or networking permitted without license from IHS
Not for Resale

12.65.2.3.2 Output

a. Rated direct-current motor voltages
b. Adequate direct current for all required tests
c. The difference between the highest and lowest peak amplitudes of the current pulses over one cycle shall not exceed 2 percent of the highest pulse amplitude.

12.65.2.4 SUPPLIES DESIGNATED BY A SINGLE LETTER

A test power supply designated by a single letter shall have all of the characteristics listed in 12.65.2.3 and, in addition, the following.

12.65.2.4.1 Power Supply C

Power supply identification letter "C" designates a three-phase full-wave power supply having six total pulses per cycle and six controlled pulses per cycle, without free wheeling, with 60-hertz input, with no series inductance being added externally to the motor armature circuit inductance. The input line-to-line alternating-current voltage to the rectifier shall be 230 volts for motor ratings given in Table 10-9 of 10. 62 and 460 volts for motor ratings given in Table 10-10 of 10. 62.

12.65.2.4.2 Power Supply D

Power supply identification letter "D" designates a three-phase semibridge having three controlled pulses per cycle with free wheeling, with 60-hertz input, with no series inductance being added externally to the motor armature circuit inductance. The input line-to-line alternating-current voltage to the rectifier shall be 230 volts for motor ratings given in Table 10-9 of 10.62 and 460 volts for motor ratings given in Table 10-10 of 10.62.

12.65.2.4.3 Power Supply E

Power supply identification letter "E" designates a three-phase single-way power supply having three total pulses per cycle and three controlled pulses per cycle, without free wheeling, with 60-hertz input, and with no series inductance being added externally to the motor armature circuit inductance. The input line-to-line alternating-current voltage to the rectifier shall be 460 volts for motor ratings given in Table 10-10 of 10. 62.

12.65.2.4.4 Power Supply K

Power supply identification letter "K" designates a single-phase full-wave power supply having two total pulses per cycle and two controlled pulses per cycle, with free wheeling, with 60-hertz input, with no series inductance being added externally to the motor armature circuit inductance. The input alternating-current voltage to the rectifier shall be 230 volts for motors with armature voltage ratings of 180 volts in Table 10-8 and 115 volts for motors with armature voltage ratings of 90 volts.

12.66 TEMPERATURE RISE

The temperature rise, above the temperature of the cooling medium, for each of the various parts of the motor, when tested in accordance with the rating at base speed, shall not exceed, the values given in the following tables.

12.66.1 Direct-Current Small Motors

All temperature rises in the following table are based on a maximum ambient temperature of 40°C. Temperatures measured by either the thermometer or resistance method shall be determined in accordance with IEEE Std 113.

	All Enclosures		
Class of Insulation System (See 1.65)	A	B	F
Time Rating (See 10.63)			
Temperature Rise, Degrees C			
a. Armature windings and all windings other than those given in item b—resistance	70	100	130
b. Shunt field windings—resistance	70	100	130
c. The temperature attained by cores, commutators, and miscellaneous parts (such as brushholders, brushes, pole tips, etc.) shall not injure the insulation or the machine in any respect.			

NOTES

1—Abnormal deterioration of insulation may be expected if the ambient temperature of 40°C is exceeded in regular operation. See Note 3.

2—The foregoing values of temperature rise are based upon operation at altitudes of 3300 feet (1000 meters) or less. For temperature rises for motors intended for operation at altitudes above 3300 (1000 meters), see 14.04.

3—When the rated maximum ambient temperature is other than 40°C, the rated value should be 50°C or 65°C. The maximum temperature rise values for each machine part and for either method of measurement should be the value selected from the appropriate table with an adjustment as follows.

Rated Maximum Ambient Temperature, Degrees C	Adjustment to Temperature Rise Values, Degrees C
50	Subtract 10
65	Subtract 25

Copyright National Electrical Manufacturers Association
Provided by IHS under license with NEMA
No reproduction or networking permitted without license from IHS

Not for Resale

12.66.2 Continuous-Time-Rated Direct-Current Medium Motors

All temperature rises in the following table are based on a maximum ambient temperature of 40°C. Temperatures shall be determined in accordance with IEEE Std 113.

	Totally Enclosed Nonventilated and Totally Enclosed Fan-Cooled Motors, Including Variations Thereof				Motors with all Other Enclosures			
Class Insulation System (see 1.65)	A	B	F	H	A	B	F	H
Time Rating	Continuous				Continuous			
Temperature Rise, Degrees C								
a. Armature windings and all windings other than those given in items b and c—resistance	70	100	130	155	70	100	130	155
b. Multi-layer field windings—resistance	70	100	130	155	70	100	130	155
c. Single-layer field windings with exposed uninsulated surfaces and bare copper windings—resistance . . .	70	100	130	155	70	100	130	155

d. The temperature attained by cores, commutators, and miscellaneous parts (such as brushholders, brushes, pole tips, etc.) shall not injure the insulation or the machine in any respect.

NOTES

1—Abnormal deterioration of insulation may be expected if the ambient temperature of 40°C is exceeded in regular operation. See Note 3.

2—The foregoing values of temperature rise are based upon operation at altitudes of 3300 feet (1000 meters) or less. For temperature rises for motors intended for operation at altitudes above 3300 feet (1000 meters), see 14.04.1

3—When the rated maximum ambient temperature is other than 40°C, the rated value should be 50°C or 65°C. The maximum temperature rise values for each machine part and for either method of measurement should be the value selected from the appropriate table with an adjustment as follows.

Rated Maximum Ambient Temperature, Degrees C	Adjustment to Temperature Rise Values, Degrees C
50	Subtract 10
65	Subtract 25

Copyright National Electrical Manufacturers Association
Provided by IHS under license with NEMA
No reproduction or networking permitted without license from IHS

Not for Resale

12.66.3 Short-Time-Rated Direct-Current Medium Motors

All temperature rises in the following tables are based on a maximum ambient temperature of 40°C. Temperatures shall be determined in accordance with IEEE Std 113.

	Motors Rated 5 and 15 Minutes*							
	Drip-Proof, Forced-Ventilated,** and Other Enclosures				Totally Enclosed Nonventilated and Totally Enclosed Fan-Cooled Motors, Including Variations Thereof			
Class Insulation System (see 1.65)	A	B	F	H	A	B	F	H
Temperature Rise, Degrees C*								
a. Armature windings and all windings other than those given in items b and c—resistance	80	115	145	175	90	125	155	185
b. Multi-layer field windings—resistance	80	115	145	175	90	125	155	185
c. Single-layer field windings with exposed uninsulated surfaces and bare copper windings—resistance . . .	80	115	145	175	90	125	155	185
d. The temperature attained by cores, commutators, and miscellaneous parts (such as brushholders, brushes, pole tips, etc.) shall not injure the insulation or the machine in any respect.								

	Motors Rated 30 and 60 Minutes*							
	Drip-Proof, Forced-Ventilated,** and Other Enclosures				Totally Enclosed Nonventilated and Totally Enclosed Fan-Cooled Motors, Including Variations Thereof			
Class Insulation System (see 1.65)	A	B	F	H	A	B	F	H
Time Rating	Continuous				Continuous			
Temperature Rise, Degrees C*								
a. Armature windings and all windings other than those given in items b and c—resistance	70	100	130	155	80	110	140	165
b. Multi-layer field windings—resistance	70	100	130	155	80	110	140	165
c. Single-layer field windings with exposed uninsulated surfaces and bare copper windings—resistance . . .	70	100	130	155	80	110	140	165
d. The temperature attained by cores, commutators, and miscellaneous parts (such as brushholders, brushes, pole tips, etc.) shall not injure the insulation or the machine in any respect.								

*See 10.63.

**Forced-ventilated motors are defined in 1.25.6, 1.25.7, and 1.26.6.

NOTES

1—Abnormal deterioration of insulation may be expected if the ambient temperature of 40°C is exceeded in regular operation. See Note 3.

2—The foregoing values of temperature rise are based upon operation at altitudes of 3300 feet (1000 meters) or less. For temperature rises for motors intended for operation at altitudes above 3300 feet (1000 meters), see 14.04.1

3—When the rated maximum ambient temperature is other than 40°C, the rated value should be 50°C or 65°C. The maximum temperature rise values for each machine part and for either method of measurement should be the value selected from the appropriate table with an adjustment as follows.

Rated Maximum Ambient Temperature, Degrees C	Adjustment to Temperature Rise Values, Degrees C
50	Subtract 10
65	Subtract 25

Copyright National Electrical Manufacturers Association
Provided by IHS under license with NEMA
No reproduction or networking permitted without license from IHS

Not for Resale

12.67 VARIATION FROM RATED VOLTAGE

Motors shall operate successfully, using the power supply selected for the basis of rating, up to and including 110 percent of rated direct-current armature and field voltages and, in the case of motors operating from a rectifier power supply, with a variation of plus or minus 10 percent of rated alternating-current line voltage.

Performance within this voltage variation will not necessarily be in accordance with the standards established for operation at rated voltage. For operation below base speed, see 14.63.

12.68 VARIATION IN SPEED DUE TO LOAD

12.68.1 Straight-Shunt-Wound, Stabilized-Shunt-Wound, and Permanent-Magnet Direct-Current Motors

The variation in speed from rated load to no load of a straight-shunt-wound, stabilized-shunt-wound, or permanent-magnet direct-current motor having a rating listed in 10.62 shall not exceed the following when the motor is operated at rated armature voltage, with the winding at the constant temperature attained when operating at base speed rating, and the ambient temperature is within the usual service range given in 14.02.1, item a.

Hp	Speed Regulation, Percent (at Base Speed)
Less than 3	25
3–50	20
51–100	15
101 and larger	10

Variation in speed due to loads when operating at speeds higher than base speeds may be greater than the values in the above table.

12.68.2 Compound-Wound Direct-Current Motors

The variation in speed from rated load to no load of a compound-wound direct-current motor having a rating listed in 10.62 shall not exceed the values given in the following table for small motors and shall be approximately 30 percent of the rated load speed for medium motors when the motor is operated at rated voltage, with the windings at the constant temperature attained when operating at its rating, and the ambient temperature is within the usual service range given in 14.02.1, item a.

Hp	Speed, Rpm	Speed Regulation, Percent
1/20 to 1/8, incl.	1725	30
1/20 to 1/8, incl.	1140	35
1/6 to 1/3, incl.	1725	25
1/6 to 1/3, incl.	1140	30
1/2 to 3/4, incl.	1725	22
1/2	1140	25

12.69 VARIATION IN BASE SPEED DUE TO HEATING

12.69.1 The variation in base speed of straight-shunt-wound, stabilized-shunt-wound, and permanent magnet direct-current motors from that at rated load at ambient temperature to that at rated load at the temperature attained at rated load armature and field voltage following a run of the specified duration shall not exceed the following percentage of the rated base speed.

	Percentage Variation of Rated Load Base Speed			
	Insulation System Class			
Enclosure Type	A	B	F	H
Open	10	15	20	25
Totally Enclosed	15	20	25	30

12.69.2 When the temperature of the motor winding changes from ambient temperature to that attained when the motor is operating at its rating, the resistance of the motor windings will increase approximately 30 percent for motors having Class A insulation systems, 40 percent for motors having Class B insulation systems, and 50 percent for motors having Class F insulation systems. With a constant voltage power supply, this will result in a speed change as large as that given in 12.69.1. Considering all factors, the speed of direct-current motors may either decrease or increase as the motor winding temperature increases. For small motors, the armature current form factor will also increase slightly with increasing motor winding temperature, but only with a single-phase rectifier is this likely to be significant.

12.70 VARIATION FROM RATED SPEED

The variation above or below the rated full-field speed of a direct-current motor shall not exceed 7-1/2 percent when operated at rated load and voltage and at full field with the windings at the constant temperature attained when operating at its ratings.

Copyright National Electrical Manufacturers Association
Provided by IHS under license with NEMA
No reproduction or networking permitted without license from IHS

Not for Resale

12.71 MOMENTARY OVERLOAD CAPACITY

Direct-current motors shall be capable of carrying successfully for 1 minute an armature current at least 50 percent greater than the rated armature current at rated voltage. For adjustable-speed motors, this capability shall apply for all speeds within the rated speed range when operated from the intended power supply.

12.72 SUCCESSFUL COMMUTATION

Successful commutation is attained if neither the brushes nor the commutator are burned or injured in the conformance test or in normal service to the extent that abnormal maintenance is required. The presence of some visible sparking is not necessarily evidence of unsuccessful commutation.

12.73 OVERSPEEDS FOR MOTORS

12.73.1 Shunt-Wound Motors

Direct-current shunt-wound motors shall be so constructed that, in an emergency not to exceed 2 minutes, they will withstand without mechanical injury an overspeed of 25 percent above the highest rated speed or 15 percent above the corresponding no-load speed, whichever is greater.

12.73.2 Compound-Wound Motors Having Speed Regulation of 35 Percent or Less

Compound-wound motors shall be so constructed that, in an emergency of short duration, they will withstand without mechanical injury an overspeed of 25 percent above the highest rated speed or 15 percent above the corresponding no-load speed, whichever is greater, but not exceeding 50 percent above the highest rated speed, and not to exceed 2 minutes.

12.73.3 Series-Wound Motors and Compound-Wound Motors Having Speed Regulation Greater Than 35 Percent

Since these motors require special consideration depending upon the application for which they are intended, the manufacturer shall assign a maximum safe operating speed which shall be stamped on the nameplate. These motors shall be so constructed that, in an emergency of short duration, they will withstand without mechanical injury an overspeed which is 10 percent above the maximum safe operating speed not to exceed 2 minutes. The safe operating speed marking is not required on the nameplates of small motors which are capable of withstanding a speed which is 10 percent above the no-load speed.

12.74 FIELD DATA FOR DIRECT CURRENT MOTORS

See 12.80.

12.75 ROUTINE TESTS ON MEDIUM DIRECT-CURRENT MOTORS

Typical tests which may be made on medium direct current motors are listed below. All tests should be made in accordance with IEEE Std 113.

a. No-load readings[1] at rated voltage on all shunt-, stabilized-shunt, compound-wound, and permanent magnet motors; quarter-load readings[1] on all series-wound motors.
b. Full-load readings[1] at base and highest rated speed on all motors having a continuous torque rating greater than that of a 15-horsepower 1750-rpm motor. Commutation should be observed when full-load readings[1] are taken.
c. High-potential test in accordance with 3.01 and 12.03.

12.76 REPORT OF TEST FORM FOR DIRECT-CURRENT MACHINES

For typical test forms, see IEEE Std 113.

12.77 EFFICIENCY

12.77.1 Type A Power Supplies

Efficiency and losses shall be determined in accordance with IEEE Std 113 using the direct measurement method or the segregated losses method. The efficiency shall be determined at rated output, voltage, and speed. In the case of adjustable-speed motors, the base speed shall be used unless otherwise specified.

The following losses shall be included in determining the efficiency.

a. I^2R loss of armature
b. I^2R loss of series windings (including commutating, compounding, and compensating fields, where applicable)

---

[1] The word "readings" includes the following.
a. Speed in revolutions per minute
b. Voltage at motor terminals
c. Amperes in armature
d. Amperes in shunt field

Copyright National Electrical Manufacturers Association
Provided by IHS under license with NEMA
No reproduction or networking permitted without license from IHS

Not for Resale

c. I^2R loss of shunt field[1]
d. Core loss
e. Stray load loss
f. Brush contact loss
g. Brush friction loss
h. Exciter loss if exciter is supplied with and driven from the shaft of the machine
i. Ventilating losses
j. Friction and windage loss[2]

In determining I^2R losses, the resistance of each winding shall be corrected to a temperature equal to an ambient temperature of 25°C plus the observed rated load temperature rise measured by resistance. When the rated load temperature rise has not been measured, the resistance of the winding shall be corrected to the following temperature.

Class of Insulation System*	Temperature, Degrees C
A	85
B	110
F	135
H	155

*Where the rated temperature rise is that of a lower class of insulation system, the temperature used for resistance correction shall be that of the lower insulation class.

12.77.2 Other Power Supplies

It is not possible to make a simulated test which will determine motor efficiency in a particular rectifier system. Only by directly measuring input watts (not the product of average volts and average amperes) using the power supply to be used in an application can the motor efficiency in that system be accurately determined. The extra losses due to the ripple in the current, and especially those due to magnetic pulsations, are a function not only of the magnitude of the armature current ripple but, also, of the actual wave shape.

12.78 STABILITY

When motors are operated in feedback control systems, due attention should be paid to stability problems. Any such problems would necessarily have to be solved by the joint efforts of the system designer, the motor manufacturer, and the manufacturer of the power supply.

12.79 OVER TEMPERATURE PROTECTION OF MEDIUM DIRECT-CURRENT MOTORS

Over-temperature protection of the various windings in a direct-current motor, especially the armature winding which rotates, is considerably more complex than the protection of the stator winding of an alternating-current motor. The wide range of load and speed (ventilation) in the typical direct-current motor application adds to the difficulty. Current-sensing devices located remotely from the motor (frequently in control panels) cannot match the thermal characteristics of direct-current motors over a wide speed range because of these variable motor cooling conditions.

In order to improve the degree of over-temperature protection, a temperature sensing protector may be installed in a direct-current motor. However, the precision of protection in over-temperature protected direct-current motors is less than that possible in alternating-current motors. In over temperature-protected direct-current motors, the protector is usually mounted on or near the commutating coil. Since this winding carries armature load current, its temperature tends to rise and fall with changes in load in a manner similar to the temperature of the armature winding.

The motor manufacturer should choose the protector and its mounting arrangement to prevent excessive temperatures of either the commutating field or the armature winding under most conditions of operation. However, under unusual loading conditions, the over-temperature protector may not be able to prevent the armature winding from reaching excessive temperatures for short periods. Maximum winding temperatures at operation of the over-temperature protector may exceed the rated temperature rise. Repeated operation of the over-temperature protector indicates a system installation which should be investigated.

If a direct-current motor is specified to be over-temperature protected, the user should inform the motor manufacturer whether a normally open or a normally closed contact device is required and the voltage, current, and frequency rating of the circuit which this device is intended to open or close.

---

[1] For separately excited motors, the shunt field I^2R loss shall be permitted to be omitted from the efficiency calculation if so stated.

[2] In the case of motors furnished with thrust bearings, only that portion of the thrust bearing loss produced by the motor itself shall be included in the efficiency calculations. Alternatively, a calculated value of efficiency, including bearing loss due to external thrust load, shall be permitted to be specified.

In the case of motors furnished with less than a full set of bearings, friction and windage losses which are representative of the actual installation shall be determined by (1) calculation or (2) experience with shop test bearings and shall be included in the efficiency calculations.

Copyright National Electrical Manufacturers Association
Provided by IHS under license with NEMA
No reproduction or networking permitted without license from IHS

Not for Resale

12.80 DATA FOR DIRECT-CURRENT MOTORS

The following may be used in supplying data for direct-current motors.

a. Manufacturer's type ..... _____
and frame designation ..... _____

b. Requisition or order number ..... _____

c. Rated horsepower ..... _____

d. Time rating ..... _____

e. Enclosure type ..... _____

f. Insulation system .....

g. Maximum ambient temperature .....

h. Intended for use on power supply .....

i. (Check one) Straight-shunt wound ( ), stabilized-shunt wound ( ), compound wound ( ), series wound ( ), or permanent magnet ( )

j. Rated voltage
1. Armature ..... _____volts, average
2. Shunt field ..... _____volts, average

k. Rated armature current ..... _____amperes, average

l. Rated form factor_____or rms current_____amperes

m. Resistance of windings at 25°C
1. Armature ..... _____ohms
2. Commutating (and compensating, if used) ..... _____ohms
3. Series ..... _____ohms
4. Shunt ..... _____ohms

n. Field amperes to obtain the following speeds at rated load amperes:
1. Base speed ..... _____rpm _____amperes
2. 150 percent of base speed, if applicable ..... _____rpm _____amperes
3. Highest rated speed ..... _____rpm _____amperes

o. Saturated inductances
1. Total armature circuit ..... _____millihenries
2. Highest rated speed ..... _____millihenries

p. Armature inertia (Wk^2) ..... _____lb-ft^2

q. If separately ventilated, minimum cubic feet per minute and static pressure ..... ___cfm ____inches of water

r. Maximum safe operating speed (for all series-wound and compound-wound motors having speed regulation greater than 35 percent) ..... _____rpm

s. Temperature protection data _____

NOTE—For permanent-magnet motors and other motor designs, some of the above listed items may not be applicable. Other data may be given.

Copyright National Electrical Manufacturers Association
Provided by IHS under license with NEMA
No reproduction or networking permitted without license from IHS
Not for Resale

12.81 MACHINE SOUND OF DIRECT-CURRENT MEDIUM MOTORS

12.81.1 Sound Measurements

Motor sound should be measured in accordance with IEEE Std 85, expressed as overall sound power levels using the A weighting network, and stated in decibels (reference = 10^{-12} watts).

Sound measurements should be taken when (1) the motor is connected to a low-ripple, Type A, power supply and (2) the motor is operated at no load at base speed.

Because of the many combinations of variables, it is not practical to establish sound power level values for direct-current motors which operate at various speeds and loads and with different power supplies.

12.81.2 Application

Sound power values are related to the sound source and are not affected by environmental conditions. They are calculated from test data taken under prescribed conditions, and the values can be repeated. Field measurements are measured in sound pressure. Measurements of sound pressure levels of motors installed in the field can be correlated to sound power levels, using the corrections to environmental conditions as outlined in the NEMA Standards Publication MG 3.

Motors operated above base speed will usually have higher sound levels. Motors operated from rectifier power supplies inherently produce higher sound levels than those operated from low-ripple power supplies.

12.81.3 Sound Levels of Drip-Proof Industrial Direct-Current Motors

The sound power levels of dripproof industrial direct-current motors, when determined in accordance with 12.81.1, generally do not exceed the values given in Table 12-12.

Table 12-12
SOUND POWER LEVELS,* IN DECIBELS, OF DRIPPROOF INDUSTRIAL DIRECT-CURRENT MOTORS USING THE "A" WEIGHTING NETWORK (REFERENCE = 10^{-12} WATT)

Hp	Base Speed, Rpm			
	850	1150	1750	2500
1	60	63	72	81
1-1/2	60	63	72	81
2	61	64	72	81
3	62	66	72	82
5	66	68	75	84
7-1/2	69	71	77	86
10	71	73	79	88
15	74	77	82	90
20	75	79	84	92
25	77	81	86	94
30	78	82	88	95
40	79	84	90	96
50	80	85	91	...
60	81	86	92	...
75	82	87	93	...
100	83	88	94	...
125	83	88	95	...
150	84	89	95	...
200	85	90	96	...

*These values are the overall sound power levels. They should not be confused with sound pressure levels which are measured by a sound level meter at a specified location.

Copyright National Electrical Manufacturers Association
Provided by IHS under license with NEMA
No reproduction or networking permitted without license from IHS

Not for Resale

--```-`-`,,`,,`,`,,`---

Copyright National Electrical Manufacturers Association
Provided by IHS under license with NEMA
No reproduction or networking permitted without license from IHS

Not for Resale

Section II
SMALL (FRACTIONAL) AND MEDIUM (INTEGRAL) MACHINES
Part 14
APPLICATION DATA—AC AND DC SMALL AND MEDIUM MACHINES

14.0 SCOPE

The standards in this Part 14 of Section II cover the following machines:

a. Alternating-Current Machines

Alternating-current machines up to and including the ratings built in frames corresponding to the continuous open-type ratings given in the table below.

Synchronous Speed	Motors, Squirrel-Cage and Wound Rotor, Hp	Motors, Synchronous, Hp, Power Factor, Unity	Motors, Synchronous, Hp, Power Factor, 0.8	Generators, Synchronous, Revolving Field Type kW and 0.8 Power Factor
3600	500	500	400	400
1800	500	500	400	400
1200	350	350	300	300
900	250	250	200	200
720	200	200	150	150
600	150	150	125	125
514	125	125	100	100

b. Direct-Current Machines

Direct-current machines built in frames with continuous drip-proof ratings, or equivalent capacities, up to and including:

motors 1.25 horsepower per rpm, open type
generators 1.0 kilowatt per rpm, open type

14.01 PROPER SELECTION OF APPARATUS

Machines should be properly selected with respect to their service conditions, usual or unusual, both of which involve the environmental conditions to which the machine is subjected and the operating conditions. Machines conforming to parts 10 through 16 of this publication are designed for operation in accordance with their ratings under usual service conditions. Some machines may also be capable of operating in accordance with their ratings under one or more unusual service conditions. Definite purpose or special-purpose machines may be required for some unusual conditions.

Service conditions, other than those specified as usual, may involve some degree of hazard. The additional hazard depends upon the degree of departure from usual operating conditions and the severity of the environment to which the machine is exposed. The additional hazard results from such things as overheating, mechanical failure, abnormal deterioration of the insulation system, corrosion, fire, and explosion.

Although experience of the user may often be the best guide, the manufacturer of the driven or driving equipment or the manufacturer of the machine, or both, should be consulted for further information regarding any unusual service conditions which increase the mechanical or thermal duty on the machine and, as a result, increase the chances for failure and consequent hazard. This further information should be considered by the user, consultants, or others most familiar with the details of the application involved when making the final decision.

14.02 USUAL SERVICE CONDITIONS

14.02.1 Environmental Conditions

Machines shall be designed for the following operating site conditions, unless other conditions are specified by the purchaser.

a. Exposure to an ambient temperature in the range of -15°C to 40°C or, when water cooling is used, an ambient temperature range of 5°C (to prevent freezing of water) to 40°C, except for machines rated less than 3/4 hp and all machines other than water cooled having commutator or sleeve bearings for which the minimum ambient temperature is 0°C
b. Exposure to an altitude which does not exceed 3300 feet (1000 meters)
c. Installation on a rigid mounting surface
d. Installation in areas or supplementary enclosures which do not seriously interfere with the ventilation of the machine

14.02.2 Operating Conditions

a. V-belt drive in accordance with 14.41 for alternating-current motors and with 14.67 for industrial direct-current motors
b. Flat-belt, chain, and gear drives in accordance with 14.07

14.03 UNUSUAL SERVICE CONDITIONS

The manufacturer should be consulted if any unusual service conditions exist which may affect the construction or operation of the motor. Among such conditions are:

a. Exposure to:
   1. Combustible, explosive, abrasive, or conducting dusts

Copyright National Electrical Manufacturers Association
Provided by IHS under license with NEMA
No reproduction or networking permitted without license from IHS
Not for Resale

2. Lint or very dirty operating conditions where the accumulation of dirt may interfere with normal ventilation
3. Chemical fumes, flammable or explosive gases
4. Nuclear radiation
5. Steam, salt-laden air, or oil vapor
6. Damp or very dry locations, radiant heat, vermin infestation, or atmospheres conducive to the growth of fungus
7. Abnormal shock, vibration, or mechanical loading from external sources
8. Abnormal axial or side thrust imposed on the motor shaft

b. Operation where:
1. There is excessive departure from rated voltage or frequency, or both (see 12.44 for alternating-current motors and 12.64 for direct-current motors)
2. The deviation factor of the alternating-current supply voltage exceeds 10 percent
3. The alternating-current supply voltage is unbalanced by more than 1 percent (see 12.45 and 14.35)
4. The rectifier output supplying a direct-current motor is unbalanced so that the difference between the highest and lowest peak amplitudes of the current pulses over one cycle exceed 10 percent of the highest pulse amplitude at rated armature current
5. Low noise levels are required
6. The power system is not grounded (see 14.30A).

c. Operation at speeds above the highest rated speed
d. Operation in a poorly ventilated room, in a pit, or in an inclined position
e. Operation where subjected to:
1. Torsional impact loads
2. Repetitive abnormal overloads
3. Reversing or electric braking
4. Frequent starting (see 12.50)
5. Out-of-phase bus transfer (see 14.44)
6. Frequent short circuits

f. Operation of machine at standstill with any winding continuously energized or of short-time-rated machine with any winding continuously energized
g. Operation of direct-current machine where the average armature current is less than 50 percent of the rated full-load amperes over a 24-hour period, or continuous operation at armature current less than 50 percent of rated current for more than 4 hours

14.04 OPERATION AT ALTITUDES ABOVE 3300 FEET (1000 METERS)

The temperature rises given for machines in 12.42, 12.43, 12.63, and 15.41 are based upon operation at altitudes of 3300 feet (1000 meters) or less and a maximum ambient temperature of 40°C. It is also recognized as good practice to use machines at altitudes greater than 3300 feet (1000 meters) as indicated in the following paragraphs.

14.04.1 Machines having Class A or B insulation systems and temperature rises in accordance with 12.42, 12.43, 12.63, and 15.41 will operate satisfactorily at altitudes above 3300 feet (1000 meters) in those locations where the decrease in ambient temperature compensates for the increase in temperature rise, as follows.

Ambient Temperature, Degrees C	Maximum Altitude, Feet (Meters)
40	3300 (1000)
30	6600 (2000)
20	9900 (3000)

14.04.2 Motors having a service factor of 1.15 or higher will operated satisfactorily at unity service factor at an ambient temperature of 40°C at altitudes above 3300 feet (1000 meters) up to 9000 feet (2740 meters).

14.04.3 Machines which are intended for use at altitudes above 3300 feet (1000 meters) at an ambient temperature of 40°C should have temperature rises at sea level not exceeding the values calculated from the following formula:

When altitude in feet:

$$T_{RSL} = T_{RA}\left[1 - \frac{(Alt - 3300)}{33000}\right]$$

When altitude in meters:

$$T_{RSL} = T_{RA}\left[1 - \frac{(Alt - 1000)}{10000}\right]$$

Where:

T_{RSL} = test temperature rise in degrees C at sea level
T_{RA} = temperature rise in degrees C from the appropriate table in 12.42, 12.43, 12.63, or 15.41
Alt = altitude above sea level in feet (meters) at which machine is to be operated

14.04.4 Preferred values of altitude are 3300 feet (1000 meters), 6600 feet (2000 meters), 9900 feet (3000 meters), 13200 feet (4000 meters), and 16500 feet (5000 meters).

14.05 SHORT-TIME RATED ELECTRICAL MACHINES

Short-time rated electrical machines (see 10.36 and 10.63) should be applied so as to ensure performance without injury. They should not be used (except on the recommendation of the manufacturer) on any application where the driven machine may be left running continously.

Copyright National Electrical Manufacturers Association
Provided by IHS under license with NEMA
No reproduction or networking permitted without license from IHS

Not for Resale

14.06 DIRECTION OF ROTATION

Facing the end of the machine opposite the drive, the standard direction of rotation for all nonreversing direct-current motors, all alternating-current single-phase motors, all synchronous motors, and all universal motors shall be counterclockwise. For alternating- and direct-current generators, the rotation shall be clockwise.

This does not apply to polyphase induction motors as most applications on which they are used are of such a nature that either or both directions of rotation may be required, and the phase sequence of the power lines is rarely known.

Where two or more machines are mechanically coupled together, the foregoing standard may not apply to all units.

14.07 APPLICATION OF PULLEYS, SHEAVES, SPROCKETS, AND GEARS ON MOTOR SHAFTS

14.07.1 Mounting

In general, the closer pulleys, sheaves, sprockets, or gears are mounted to the bearing on the motor shaft, the less will be the load on the bearing. This will give greater assurance of trouble-free service.

The center point of the belt, or system of V-belts, should not be beyond the end of the motor shaft.

The inner edge of the sheave or pulley rim should not be closer to the bearing than the shoulder on the shaft but should be as close to this point as possible.

The outer edge of a chain sprocket or gear should not extend beyond the end of the motor shaft.

14.07.2 Minimum Pitch Diameter for Drives Other Than V-Belt

To obtain the minimum pitch diameters for flat-belt, timing-belt, chain, and gear drives, the multiplier given in the following table should be applied to the narrow V-belt sheave pitch diameters in 14.41 for alternating-current general-purpose motors or to the V-belt sheave pitch diameters as determined from 14.67 for industrial direct-current motors.

Drive	Multiplier
Flat belt*	1.33
Timing belt**	0.9
Chain sprocket	0.7
Spur gear	0.75
Helical gear	0.85

*The above multiplier is intended for use with conventional single-ply flat belts. When other than single-ply flat belts are used, the use of a larger multiplier is recommended.

**It is often necessary to install timing belts with a snug fit. However, tension should be no more than that necessary to avoid belt slap or tooth jumping.

14.07.3 Maximum Speed of Drive Components

The maximum speed of drive components should not exceed the values recommended by the component manufacturer or the values specified in the industry standards to which the component manufacturer indicates conformance. Speeds above the maximum recommended speed may result in damage to the equipment or injury to personnel.

14.08 THROUGH-BOLT MOUNTING

Some motor users have found it to their advantage to case the motor drive end shield as an integral part of the driven machine and, consequently, they purchase the motors without the drive-end shield. In view of the considerable range and variety of stator rabbet diameters, clamp bolt circle diameters, and clamp bolt sizes among motors of differing manufacture, this type of driven machine construction may seriously limit users' choice of motors suppliers unless adequate machining flexibility has been provided in the design of this end shield.

In order to assist the machine designer in providing such flexibility, the following data have been compiled to give some indication of the range of motor rabbet and clamp bolt circle diameters which may be involved. The following table is based on information supplied by member companies of the NEMA Motor and Generator Section that build motors in these frame sizes.

	48 Frame, Inches	56 Frame, Inches
Motor Rabbet Diameter:		
Smallest diameter reported . .	5.25	5.875
Largest diameter reported . . .	5.625	6.5
Over 75 percent of respondents reported diameters within range of . . .	5.34–5.54	6.03–6.34
Motor Clamp Bolt Circle Diameter:		
Smallest diameter reported . .	4.875	5.5
Largest diameter reported . . .	5.250	6.25
Over 75 percent of respondents reported diameters within range of . . .	5.00–5.25	5.65–5.94
Motor Clamp Bolt Size:		
Smallest diameter reported . .	#8	#10
Largest diameter reported . . .	#10	#10

14.09 RODENT PROTECTION

It is often desirable to provide rodent protection in an open machine in order to retard the entrance of small rodents into the machine. Protection may be provided by limiting the size of the openings giving direct access to the

Copyright National Electrical Manufacturers Association
Provided by IHS under license with NEMA
No reproduction or networking permitted without license from IHS
Not for Resale

internal parts of the machine by means of screens, baffles, grills, expanded metal, structual parts of the machine, or by other means. The means employed may vary with the size of the machine. In such cases, care should be taken to assure adequate ventilation since restricting the air flow could cause the machine to exceed its temperature rating. Before applying screens, baffles, expanded metal, etc., to a machine for rodent protection, the motor or generator manufacturer should be consulted.

A common construction restricts the openings giving direct access to the interior of the machine so that a 0.312-inch diameter rod cannot enter the opening.

Copyright National Electrical Manufacturers Association
Provided by IHS under license with NEMA
No reproduction or networking permitted without license from IHS

Not for Resale

Section II
SMALL (FRACTIONAL) AND MEDIUM (INTEGRAL) MACHINES
Part 14
APPLICATION DATA—AC SMALL AND MEDIUM MACHINES

14.0 SCOPE

The standards in this Part 14 of Section II cover alternating-current motors up to and including the ratings built in frames corresponding to the continuous open-type ratings given in the table below.

Synchronous Speed	Motors, Squirrel-Cage and Wound Rotor, Hp	Motors, Synchronous, Hp	
		Power Factor	
		Unity	0.8
3600	500	500	400
1800	500	500	400
1200	350	350	300
900	250	250	200
720	200	200	150
600	150	150	125
514	125	125	100

14.30 EFFECTS OF VARIATION OF VOLTAGE AND FREQUENCY UPON THE PERFORMANCE OF INDUCTION MOTORS

Induction motors are at times operated on circuits of voltage or frequency other than those for which the motors are rated. Under such conditions, the performance of the motor will vary from the rating. The following are some of the operating results caused by small variations of voltage and frequency and are indicative of the general character of changes produced by such variation in operating conditions.

14.30.1 With a 10-percent increase or decrease in voltage from that given on the nameplate, the heating at rated horsepower load may increase. Such operation for extended periods of time may accelerate the deterioration of the insulation system.

14.30.2 In a motor of normal characteristics at full rated horsepower load, a 10-percent increase of voltage above that given on the nameplate would usually result in a decided lowering in power factor. A 10-percent decrease of voltage below that given on the nameplate would usually give an increase in power factor.

14.30.3 The locked-rotor and breakdown torque will be proportional to the square of the voltage applied.

14.30.4 An increase of 10 percent in voltage will result in a decrease of slip of about 17 percent, while a reduction of 10 percent will result in an increase slip amount of about 21 percent. Thus, if the slip at rated voltage were 5 percent, it would be increased to 6.05 percent if the voltage were reduced 10 percent.

14.30.5 A frequency higher than the rated frequency usually improves the power factor but decreases locked rotor torque and increases the speed and friction and windage loss. At a frequency lower than the rated frequency, the speed is decreased, locked-rotor torque is increased, and power factor is decreased. For certain kinds of motor load, such as in textile mills, close frequency regulation is essential.

14.30.6 If variations in both voltage and frequency occur simultaneously, the effect will be superimposed. Thus, if the voltage is high and the frequency low, the locked-rotor torque will be very greatly increased, but the power factor will be decreased and the temperature rise increased with normal load.

14.30.7 The foregoing facts apply particularly to general-purpose motors. They may not always be true in connection with special-purpose motors, built for a particular purpose, or for very small motors.

14.30A MACHINES OPERATING ON AN UNGROUNDED SYSTEM

Alternating current machines are intended for continuous operation with the neutral at or near ground potential. Operation on ungrounded systems with one line at ground potential should be done only for infrequent periods of short duration, for example as required for normal fault clearance. If it is intended to operate the machine continuously or for prolonged periods in such conditions, a special machine with a level of insulation suitable for such operation is required. The motor manufacturer should be consulted before selecting a motor for such an application.

Grounding of the interconnection of the machine neutral points should not be undertaken without consulting the System Designer because of the danger of zero-sequence components of currents of all frequencies under some operating conditions and the possible mechanical damage to the winding under line-to-neutral fault conditions.

Other auxiliary equipment connected to the motor such as, but not limited to, surge capacitors, power factor correction capacitors, or lightning arrestors, may not be suit-

Copyright National Electrical Manufacturers Association
Provided by IHS under license with NEMA
No reproduction or networking permitted without license from IHS

Not for Resale

able for use on an ungrounded system and should be evaluated independenty.

14.31 OPERATION OF ALTERNATING CURRENT MOTORS FROM VARIABLE-FREQUENCY OR VARIABLE-VOLTAGE POWER SUPPLIES, OR BOTH

14.31.1 Performance

Alternating-current motors to be operated from solid state or other types of variable-frequency or variable-voltage power supplies, or both, for adjustable-speed-drive applications may require individual consideration to provide satisfactory performance. Especially for operation below rated speed, it may be necessary to reduce the motor torque load below the rated full-load torque to avoid overheating the motors. The motor manufacturer should be consulted before selecting a motor for such applications.

WARNING: Motors operated from variable frequency or variable voltage power supplies, or both, should not be used in any Division 1 hazardous (classified) locations unless:

a. The motor is identified on the nameplate as acceptable for variable speed operation when used in Division 1 hazardous (classified) locations.
b. The actual operating speed range is not outside of the permissible operating speed range marked on the motor nameplate.
c. The actual power supply is consistent with the type of power supply identified in information which is supplied by the motor manufacturer.

For motors to be used in any Division 2 hazardous (classified) locations, the motor manufacturer should be consulted.

High frequency harmonics of inverters can cause an increase in the level of leakage current in the motor, Therefore, users are cautioned to follow established grounding practices for the motor frame.

Failure to comply with this warning could result in an unsafe installation that could cause damage to property, serious injury, or death to personnel, or both.

14.31.2 Shaft Voltages

Additional shaft voltages may occur from voltage and current peaks which are superimposed on the symmetrical phase quantities during inverter operation. Experience shows that while this is generally not a problem on this class of machines, shaft voltages higher than 500 millivolts (peak), when tested per IEEE Std 112, may necessitate grounding the shaft and/or insulating a bearing.

14.32 EFFECTS OF VOLTAGES OVER 600 VOLTS ON THE PERFORMANCE OF LOW-VOLTAGE MOTORS

Polyphase motors are regularly built for voltage ratings of 575 volts or less (see 10.30) and are expected to operate satisfactorily with a voltage variation of plus or minus 10 percent. This means that motors of this insulation level may be successfully applied up to an operating voltage of 635 volts.

Based on motor manufacturers' high-potential tests and performance in the field, it has been found that where utilization voltage exceed 635 volts, the safety factor of the insulation has been reduced to a level inconsistent with good engineering procedure.

In view of the foregoing, motors of this insulation level should not be applied to power systems either with or without grounded neutral where the utilization voltage exceeds 635 volts, regardless of the motor connection employed.

However, there are some definite-purpose motors that are intended for operation on a grounded 830-volt system. Such motors are suitable for 460-volt operation when delta connected and for 796-volt operation when wye connected when the neutral of the system is solidly grounded.

14.33 OPERATION OF GENERAL-PURPOSE ALTERNATING-CURRENT POLYPHASE, 2-, 4-, 6-, AND 8-POLE, 60-HERTZ MEDIUM INDUCTION MOTORS OPERATED ON 50 HERTZ

While general-purpose alternating-current polyphase, 2-, 4-, 6-, and 8-pole, 60-hertz medium induction motors are not designed to operate at their 60-hertz ratings on 50-hertz circuits, they are capable of being operated satisfactorily on 50-hertz circuits if their voltage and horsepower ratings are appropriately reduced. When such 60-hertz motors are operated on 50-hertz circuits, the applied voltage at 50 hertz should be reduced to 5/6 of the 60-hertz voltage rating of the motor, and the horsepower load at 50 hertz should be reduced to 5/6 of the 60-hertz horsepower rating of the motor.

When a 60-hertz motor is operated on 50 hertz at 5/6 of the 60-hertz voltage and horsepower ratings, the other performance characteristics for 50-hertz operation are as follows.

14.33.1 Speed

The synchronous speed will be 5/6 of the 60-hertz synchronous speed, and the slip will be 5/6 of the 60-hertz slip.

14.33.2 Torques

The rated load torque in pound-feet will be approximately the same as the 60-hertz rated load torque in pound feet.

Copyright National Electrical Manufacturers Association
Provided by IHS under license with NEMA
No reproduction or networking permitted without license from IHS
Not for Resale

The locked-rotor and breakdown torques in pound-feet of 50-hertz motors will be approximately the same as the 60-hertz locked-rotor and breakdown torques in pound-feet.

14.33.3 Locked-Rotor Current

The locked-rotor current (amperes) will be approximately 5 percent less than the 60-hertz locked-rotor current (amperes). The Code letter appearing on the motor nameplate to indicate locked-rotor kVA per horsepower applies only to the 60-hertz rating of the motor.

14.33.4 Service Factor

The service factor will be 1.0.

14.33.5 Temperature Rise

The temperature rise will not exceed 90°C (see 14.30).

14.34 OPERATION OF 230-VOLT INDUCTION MOTORS ON 208-VOLT SYSTEMS

Induction motors intended for operation on 208-volt systems should be rated for 208 or 200 volts.

Operation of a motor rated 230 volts on a 208-volts system is not recommended because utilization voltages are commonly encountered below the -10-percent tolerance on the voltage rating for which the motor is designed. Such operation will generally result in excessive overheating and serious reduction in torques.

14.34.1 Induction motors intended for operation on 208-volt systems should be rated for 200 volts.

Operation of a motor rated 230 volts on a 208-volt systems is not recommended (except as described in 14.34.2) because utilization voltages are commonly encountered below the -10 percent tolerance on the voltage rating for which the motor is designed. Such operation will generally result in excellent overheating and serious reduction in torques.

14.34.2 Motors rated 230 volts, but capable of operating satisfactorily on 208 volt systems shall be permitted to be labeled "Usable at 200 Volts." Motors so marked shall be suitable for operation at rated (1.0 service factor) horsepower at a utilization voltage of 200 volts at rated frequency, with a temperature rise not exceeding the values given in 12.43, item a.2., for the class insulation system furnished. The service factor, horsepower, and corresponding value of current shall be marked on the nameplate; i.e. "Usable @ 200 V. _____hp, _____amps, 1.0 S.F."

14.34.3 When operated on a 208 volt system the motor slip will increase approximately 30% and the motor locked-rotor, pull-up and breakdown torque values will be reduced by approximately 20-30%. Therefore, it should be determined that the motor will start and accelerate the connected load without injurious heating, and that the breakdown torque is adequate for the application.

NOTE—Utilization voltage tolerance is 200 minus 5% (190 volts)—Ref. ANSI C84.1, "Voltage Range A." Performance within this voltage tolerance will not necessarily be in accordance with that stated in 14.34.2.

14.35 EFFECTS OF UNBALANCED VOLTAGES ON THE PERFORMANCE OF POLYPHASE INDUCTION MOTORS

When the line voltages applied to a polyphase induction motor are not equal, unbalanced currents in the stator windings will result. A small percentage voltage unbalance will result in a much larger percentage current unbalance. Consequently, the temperature rise of the motor operating at a particular load and percentage voltage unbalance will be greater than for the motor operating under the same conditions with balanced voltages.

Voltages preferably should be evenly balanced as closely as can be read on a voltmeter. Should voltages be unbalanced, the rated horsepower of the motor should be multiplied by the factor shown in Figure 14-1 to reduce the possibility of damage to the motor. Operation of the motor above a 5-percent voltage unbalance condition is not recommended.

When the derating curve of Figure 14-1 is applied for operation on unbalanced voltages, the selection and setting of the overload device should take into account the combination of the derating factor applied to the motor land increase in current resulting from the unbalanced voltages. This is a complex problem involving the variation in motor current as a function of load and voltage unbalanced in addition to the characteristics of the overload device relative to $I_{maximum}$ or $I_{average}$. In the absence of specific information, it is recommended that overload devices be selected or adjusted, or both, at the minimum value that does not result in tripping for the derating factor and voltage unbalance that applies. When unbalanced voltages are anticipated, it is recommended that the overload devices be selected so as to be responsive to $I_{maximum}$ in preference to overload devices responsive to $I_{average}$.

Copyright National Electrical Manufacturers Association
Provided by IHS under license with NEMA
No reproduction or networking permitted without license from IHS

Not for Resale

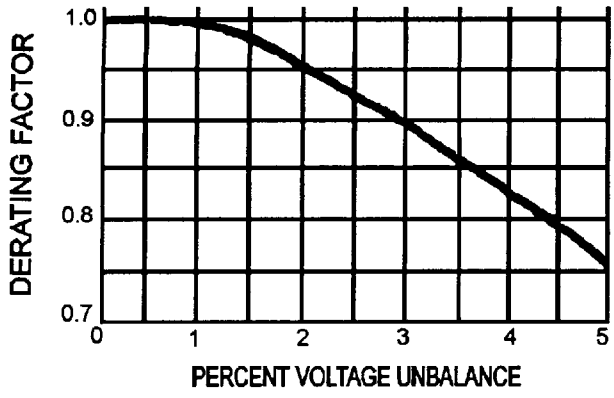

Figure 14-1
MEDIUM MOTOR DERATING FACTOR DUE TO UNBALANCED VOLTAGE

14.35.1 Effect on Performance—General

The effect of unbalanced voltages on polyphase induction motors is equivalent to the introduction of a "negative sequence voltage" having a rotation opposite to that occurring with balanced voltages. This negative sequence voltage produces in the air gap a flux rotating against the rotation of the rotor, tending to produce high currents. A small negative-sequence voltage may produce in the windings currents considerably in excess of those present under balanced voltage conditions.

14.35.2 Unbalance Defined

The voltage unbalance in percent may be defined as follows:

$$\text{percent voltage unbalance} = 100 \times \frac{\text{maximum voltage deviation from average voltage}}{\text{average voltage}}$$

EXAMPLE—With voltages of 460, 467, and 450, the average is 459, the maximum deviation from average is 9, and the percent unbalance = $100 \times \frac{9}{459} = 1.96$ percent.

14.35.3 Torques

The locked-rotor torque and breakdown torque are decreased when the voltage is unbalanced. If the voltage unbalance should be extremely severe, the torques might not be adequate for the application.

14.35.4 Full-Load Speed

The full-load speed is reduced slightly when the motor operates at unbalanced voltages.

14.35.5 Currents

The locked-rotor current will be unbalanced to the same degree that the voltages are unbalanced, but the locked-rotor kVA will increase only slightly.

The currents at normal operating speed with unbalanced voltages will be greatly unbalanced in the order of approximately 6 to 10 times the voltage unbalance.

14.36 APPLICATION OF ALTERNATING-CURRENT MOTORS WITH SERVICE FACTORS

14.36.1 General

A general-purpose alternating-current motor or any alternating-current motor having a service factor in accordance with 12.47 is suitable for continuous operation at rated load under the usual service conditions given in 14.02. When the voltage and frequency are maintained at the value specified on the nameplate, the motor may be overloaded up to the horsepower obtained by multiplying the rated horsepower by the service factor shown on the nameplate.

When the motor is operated at any service factor greater than 1, it may have efficiency, power factor, and speed different from those at rated load, but the locked-rotor torque and current and breakdown torque will remain unchanged.

A motor operating continuously at any service factor greater than 1 will have a reduced life expectancy compared to operating at its rated nameplate horsepower. Insulation life and bearing life are reduced by the service factor load.

14.36.2 Temperature Rise—Medium Alternating-Current Motors

When operated at the service-factor load, the motor will have a temperature rise as specified in 12.43, item a.2.

14.36.3 Temperature Rise—Small Alternating-Current Motors

When operated at the service-factor load, the motor will have a temperature rise as specified in 12.42.1.

14.37 CHARACTERISTICS OF PART-WINDING-START POLYPHASE INDUCTION MOTORS

The result of energizing a portion of the primary windings of a polyphase induction motor will depend upon how this portion is distributed in the motor and, in some cases, may do nothing more than overload the portion of the winding so energized, i.e., result in no noticeable reduction of current or torque. For this reason, a standard 230/460-volt dual voltage motor may or may not be satisfactory for part-winding starting on a 240-volt circuit.

When winding is distributed so as to be satisfactory for part-winding starting, a commonly used connection results in slightly less than 50 percent of normal locked-rotor torque and approximately 60 percent of normal locked-rotor current. It is evident that the torque may be insufficient to start the motor if it has much friction load. This is not important in applications where it is permissible to draw the full-winding starting current from the system in two

Copyright National Electrical Manufacturers Association
Provided by IHS under license with NEMA
No reproduction or networking permitted without license from IHS

Not for Resale

increments. (If actual values of torque and current are important, they should be obtained from the motor manufacturer.)

If the motor does not start when the first winding is energized, it may not accelerate to full speed. On part winding, it can at best develop less than half the torque it is capable of on full winding and usually the speed-torque characteristic is adversely affected by harmonics resulting from the unbalanced magnetic circuit. Further, the permissible accelerating time on part winding may be less than on full winding because of the higher current in the portion of the winding energized. However, in the usual application, the remainder of the winding is energized a few seconds after the first portion, and the motor then accelerates and runs smoothly. During the portion of the accelerating period that the motor is on part winding, it may be expected to be noisier than when on full winding.

14.38 COUPLING END-PLAY AND ROTOR FLOAT FOR HORIZONTAL ALTERNATING-CURRENT MOTORS

14.38.1 It is recommended that motors be provided with ball bearings wherever applicable, particularly for the ratings indicated in the following table.

Motor Hp	Synchronous Speed of Motors, Rpm
500 and below	3600, 3000, 1800, and 1500
350 and below	1200 and 1000
250 and below	900 and 750
200 and below	720 and below

14.38.2 Where motors are provided with sleeve bearings, the motor bearings and limited-end float coupling should be applied as indicated in the following table.

Motor Hp	Synchronous Speed of Motors, Rpm	Min. Motor Rotor End Float, Inch	Max. Coupling End Float, Inch
125 to 250, incl.	3600 and 3000	0.25	0.09
300 to 500, incl.	3600 and 3000	0.50	0.19
125 to 500, incl.	1800 and below	0.25	0.09

14.38.3 To facilitate the assembly of driven equipment and sleeve and bearing motors on frames 440 and larger, the motor manufacturer should:

a. Indicate on the motor outline drawing the minimum motor rotor end-play in inches
b. Mark rotor end-play limits on motor shaft

NOTE—The motor and the driven equipment should be assembled and adjusted at the installation site so that there will be some endwise clearance in the motor bearing under all operating conditions. The difference between the rotor end-play and the end-float in the coupling allows for expansion and contraction in the driven equipment, for clearance in the driven equipment thrust bearing, for endwise movement in the coupling, and for assembly.

14.39 OUTPUT SPEEDS FOR MEDIUM GEAR MOTORS OF PARALLEL CONSTRUCTION

Output Speeds
(Based on Assumed Operating Speed of 1750 rpm)

Nominal Gear Ratios	Output Speeds	Nominal Gear Ratios	Output Speeds
1.225	1430	25.628	68
1.500	1170	31.388	56
1.837	950	38.442	45
2.250	780	47.082	37
2.756	640	57.633	30
3.375	520	70.623	25
4.134	420	86.495	20
5.062	350	105.934	16.5
6.200	280	129.742	13.5
7.594	230	158.900	11.0
9.300	190	194.612	9.0
11.390	155	238.350	7.5
13.950	125	291.917	6.0
17.086	100	357.525	5.0
20.926	84	437.875	4.0

These output speeds are based on an assumed operating speed of 1750 rpm and certain nominal gear ratios and will be modified:

a. By the variation in individual motor speeds from the basic operating speed of 1750 rpm

(The same list of output speeds may be applied to 50-hertz gear motors when employing motors of 1500 rpm synchronous speed if an assumed motor operating speed of 1430 rpm is used.)

(This list of output speeds may be applied to 60-hertz gear motors when employing motors of 1200 rpm synchronous speed if an assumed motor operating speed of 1165 rpm is used.)

b. By a variation in the exact gear ratio from the nominal, which variation will not change the output speed by more than plus or minus 3 percent

14.40 APPLICATION OF MEDIUM ALTERNATING-CURRENT SQUIRREL-CAGE MACHINES WITH SEALED WINDINGS

14.40.1 Medium alternating-current squirrel-cage machines with sealed windings are generally suitable for exposure to the following environmental conditions.

a. High humidity
b. Water spray and condensation
c. Detergents and mildly corrosive chemicals
d. Mildly abrasive nonmagnetic air-borne dust in quantities insufficient to impede proper ventilation or mechanical operation

Copyright National Electrical Manufacturers Association
Provided by IHS under license with NEMA
No reproduction or networking permitted without license from IHS

Not for Resale

14.40.2 For environmental conditions other than those listed in 14.40.1, the machine manufacturer should be consulted. Such conditions may include the following.

a. Salt spray
b. Oils, greases, fats, and solvents
c. Severely abrasive nonmagnetic dusts
d. Vibration
e. Occasional submergence in water with the motor not running

14.40.3 The use of machines with sealed windings in hazardous areas does not obviate the need for other constructional features dictated by requirements for the areas involved.

NOTE—See 12.43, item a.5, for temperature rating.

14.41 APPLICATION OF V-BELT SHEAVE DIMENSIONS TO ALTERNATING CURRENT MOTORS HAVING ANTIFRICTION BEARINGS

14.41.1 Alternating-current motors having antifriction bearings and a continuous time rating with the frame sizes, horsepower, and speed ratings listed below are designed to operate with V-belt sheaves within the limited dimensions listed. Selection of V-belt sheave dimensions is made by the V-belt drive vendor and the motor purchaser but, to ensure satisfactory motor operation, the selected diameter shall be not smaller than, nor shall the selected width be greater than, the dimensions listed in Table 14-1.

14.41.2 For motors having speeds and ratings other than those given in 14.41.1, the motor manufacturer should be consulted.

14.42 ASEISMATIC CAPABILITY

See 20.83.

14.43 POWER FACTOR OF THREE-PHASE, SQUIRREL-CAGE, MEDIUM MOTORS WITH CONTINUOUS RATINGS

14.43.1 The approximately full-load power factor can be calculated from published or nameplate data as follows.

$$PF = \frac{431 \times hp}{E \times I \times Eff}$$

Where:

PF = Per unit power factor at full load

$$\left(\text{per unit PF} = \frac{\text{Percent PF}}{100} \right)$$

hp = Rated horsepower
E = Rated voltage
I = Rated current
Eff = Per unit nominal full-load efficiency from published data or as marked on the motor nameplate or associated with the index letter on the nameplate (as listed in 12.55)

$$\left(\text{per unit Eff} = \frac{\text{Percent Eff}}{100} \right)$$

14.43.2 For safety reasons, it is generally better to improve power factor for multiple loads as a part of the plant distribution system. In those cases where local codes or other circumstances require improving the power factor of an individual motor, the KVAR rating of the improvement capacitor may be calculated as follows:

$$KVAR = \frac{0.746 \times hp}{Eff} \times \left(\frac{\sqrt{1-(PF)^2}}{PF} - \frac{\sqrt{1-(PF_i)^2}}{PF_i} \right)$$

Where:

KVAR= Rating of three-phase power factor improvement capacitor
hp = As defined in 14.43.1
Eff = As defined in 14.43.1
PF = As defined in 14.43.1
PF_i = Improved per unit power factor for the motor-capacitor combination

14.43.3 In some cases, it may be desirable to determine the resultant power factor, PF_i, where the power factor improvement capacitor selected within the maximum safe value specified by the motor manufacturer is known. The resultant full-load power factor, PF_i, may be calculated from the following.

$$PF_i = \frac{1}{\sqrt{\left(\frac{\sqrt{1-(PF)^2}}{PF} - \frac{KVAR \times Eff}{0.746 \times HP} \right)^2 + 1}}$$

WARNING: In no case should power factor improvement capacitors be applied in ratings exceeding the maximum safe value specified by the motor manufacturer. Excessive improvement may cause over excitation resulting in high transient voltages, currents, and torques that can increase safety hazards to personnel and cause possible damage to the motor or to the driven equipment.

14.43.4 The proper application of power capacitors to a bus with harmonic currents requires an analysis of the power system to avoid potential harmonic resonance of the power capacitors in combination with transformer and circuit inductance. For power distribution systems which have several motors connected to a bus, power capacitors connected to the bus rather than switched with individual motors is recommended to minimize the potential combinations of capacitance and inductance, and to simplify the application of any tuning filters that may be required. This requires that such bus-connected capacitor bands be sized so that proper bus voltage limits are maintained.

Copyright National Electrical Manufacturers Association
Provided by IHS under license with NEMA
No reproduction or networking permitted without license from IHS
Not for Resale

Table 14-1
MEDIUM MOTORS—POLYPHASE INDUCTION*†

Frame Number	Horsepower at Synchronous Speed, Rpm				V-belt Sheave**			
					Conventional		Narrow	
					A, B, C, D, and E††		3V, 5V, and 8V▲▲	
	3600	1800	1200	900	Minimum Pitch Diameter, Inches	Maximum Width, Inches▲	Minimum Outside Diameter, Inches	Maximum Width, Inches#
143T	1-1/2	1	3/4	1/2	2.2		2.2	
145T	2–3	1-1/2–2	1	3/4	2.4		2.4	
182T	3	3	1-1/2	1	2.4		2.4	
182T	5	...	...	...	2.6		2.4	
184T	...	...	2	1-1/2	2.4		2.4	
184T	5	...	...	...	2.6		2.4	
184T	7-1/2	5	...	...	3.0		3.0	
213T	7-1/2–10	7-1/2	3	2	3.0		3.0	
215T	10	...	5	3	3.0		3.0	
215T	15	10	...	...	3.8		3.8	
254T	15	...	7-1/2	5	3.8		3.8	
254T	20	15	...	...	4.4		4.4	
256T	20–25	...	10	7-1/2	4.4		4.4	
256T	...	20	...	...	4.6		4.4	
284T	...	...	15	10	4.6		4.4	
284T	...	25	...	...	5.0		4.4	
286T	...	30	20	15	5.4		5.2	
324T	...	40	25	20	6.0		6.0	
326T	...	50	30	25	6.8		6.8	
364T	...	...	40	30	6.8		6.8	
364T	...	60	...	...	7.4		7.4	
365T	...	...	50	40	8.2		8.2	
365T	...	75	...	...	9.0		8.6	
404T	...	...	60	...	9.0		8.0	
404T	...	...	...	50	9.0		8.4	
404T	...	100	...	...	10.0		8.6	
405T	...	...	75	60	10.0		10.0	
405T	...	100	...	...	10.0		8.6	
405T	...	125	...	...	11.5		10.5	
444T	...	...	100	...	11.0		10.0	
444T	...	...	...	75	10.5		9.5	
444T	...	125	...	...	11.0		9.5	
444T	...	150	...	...	...		10.5	
445T	...	...	125	...	12.5		12.0	
445T	...	...	...	100	12.5		12.0	
445T	...	150	...	...	...		10.5	
445T	...	200	...	...	...		13.2	

*For the maximum speed of the drive components, see 14.07.3.

†For the assignment of horsepower and speed ratings to frames, see NEMA Standards Publication No. MG 13.

**Sheave dimensions are based on the following:

a. Motor nameplate horsepower and speed.
b. Belt service factor of 1.6 with belts tightened to belt manufacturers' recommendations
c. Speed reduction of 5:1
d. Mounting of sheave on motor shaft in accordance with 14.07
e. Center-to-center distance between sheaves approsimately equal to the diameter of the larger sheave
f. Calculations based upon standards covered by the †† and ▲▲ footnotes, as applicable

▲▲As covered by *Standard Specifications for Drives Using Narrow V-Belts (3V, 5V, and 8V)*[1].

▲The width of the sheave shall be not greater than that required to transmit the indicted horsepower but in no case shall it be wider than 2(N-W)-0.25.

#The width of the sheave shall be not greater than that required to transmit the indicated horsepower but in no case shall it be wider than (N-W).

††As covered by Engineering Standards Specifications for Drives Using Multiple V-Belts (A,B,C, D and E Cross Sections)[1]

[1]See 1.01, The Rubber Manufacturers Association.

Copyright National Electrical Manufacturers Association
Provided by IHS under license with NEMA
No reproduction or networking permitted without license from IHS

Not for Resale

14.43.5 The use of power capacitors for power factor correction, on the load side of an electronic power supply connected to an induction motor, is not recommended. The proper application of such capacitors requires an analysis of the motor, electronic power supply, and load characteristics as a function of speed to avoid potential overexcitation of the motor, harmonic resonance, and capacitor overvoltage. For such applications the drive manufacturer should be consulted.

14.44 BUS TRANSFER OR RECLOSING

See 20.85.

14.45 ROTOR INERTIA

The rotor inertia (Wk^2) in lb-ft^2 for the application of medium ac induction motors with dynamic braking equipment may be estimated by the following formula:

$$Wk^2 = \left[0.02 \times 2^{\left[\frac{Poles}{2}\right]} \times HP^{\left[1.35-0.05 \times \frac{Poles}{2}\right]}\right]$$

14.46 EFFECTS OF LOAD ON MOTOR EFFICIENCY

The efficiency of polyphase induction motors varies from zero at no load to a maximum value near rated load and then decreases as load increases further. The efficiency versus load curves in Figure 14-2 illustrate the typical profile of efficiency variation for various motor ratings from no load to 125% of rated load. Actual values of motor efficiencies at various load levels can be obtained by consulting the motor manufacturer.

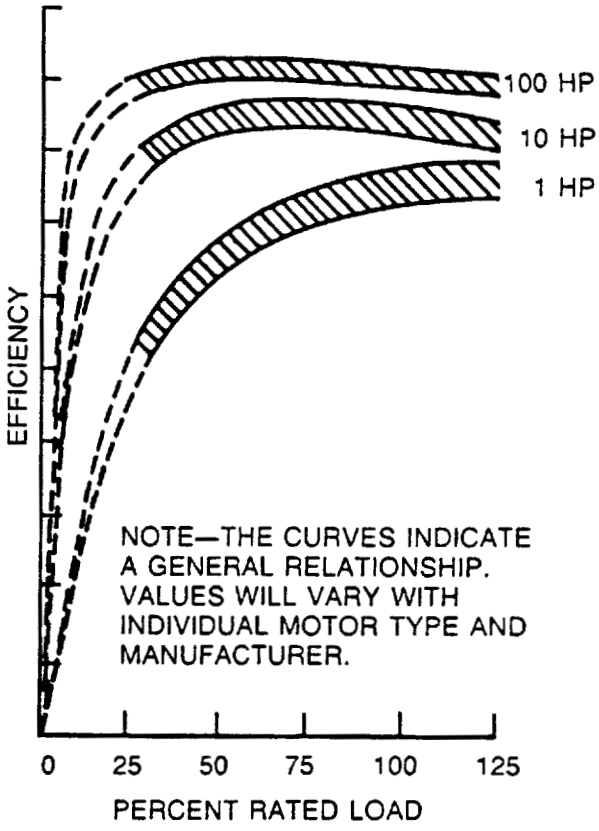

Figure 14-2
TYPICAL EFFICIENCY VERSUS LOAD CURVES FOR 1800-RPM THREE-PHASE 60-HERTZ DESIGN B SQUIRREL-CAGE INDUCTION MOTORS

Copyright National Electrical Manufacturers Association
Provided by IHS under license with NEMA
No reproduction or networking permitted without license from IHS
Not for Resale

Section II
SMALL (FRACTIONAL) AND MEDIUM (INTEGRAL) MACHINES
Part 14
APPLICATION DATA—DC SMALL AND MEDIUM MOTORS

14.0 SCOPE

The standards in this Part 14 of Section II cover direct-current motors built in frames with continuous dripproof ratings, or equivalent capacities, up to and including 1.25 horsepower per rpm, open-type.

14.60 OPERATION OF SMALL MOTORS ON RECTIFIED ALTERNATING CURRENT

14.60.1 General

When direct-current small motors intended for use on adjustable-voltage electronic power supplies are operated from rectified power sources, the pulsating voltage and current wave forms affect the motor performance characteristics (see 14.61). Because of this, the motors should be designed or specially selected to suit this type of operation.

A motor may be used with any power supply if the combination results in a form factor at rated load equal to or less than the motor rated form factor.

A combination of a power supply and a motor which results in a form factor at rated load greater than the motor rated form factor will cause overheating of the motor and will have an adverse effect on commutation.

There are many types of power supplies which can be used; some are:

a. Single-phase, half-wave
b. Single-phase, half-wave, back rectifier
c. Single-phase, half-wave, alternating-current voltage controlled
d. Single-phase, full-wave, firing angle controlled
e. Single-phase, full-wave, firing angle controlled, back rectifier
f. Three-phase, half-wave, voltage controlled
g. Three-phase, half-wave, firing angle controlled

It is impractical to design a motor or to list a standard motor for each type of power supply. The combination of power supply and motor must be considered. The resulting form factor of the combination is a measure of the effect of the rectified voltage on the motor current as it influences the motor performance characteristics, such as commutation and heating.

14.60.2 Form Factor

The form factor of the current is the ratio of the root current mean-square value of the current to the average value of the current.

Armature current form factor of a motor-rectifier circuit may be determined by measuring the rms armature current (using an electrothermic instrument,[1] electrodynamic instrument,[1] or other true rms responding instrument) and the average armature current (using a permanent-magnet moving-coil instrument[1]). The armature current form factor will vary with changes in load, speed, and circuit adjustment.

Armature current form factor of a motor-rectifier circuit may be determined by calculation. For this purpose, the inductance of the motor armature circuit should be known or estimated, including the inductance of any components in the power supply which are in series with the motor armature. The value of the motor inductance will depend upon the horsepower, speed, and voltage ratings and the enclosure of the motor and should be obtained from the motor manufacturer. The method of calculation of the armature current form factor should take into account the parameters of the circuit, such as the number of phases, the firing angle, half-wave, with or without back rectifier, etc., and whether or not the current is continuous or discontinuous. Some methods of calculation are described in 14.62.

Ranges of armature current form factors on some commonly used motor-rectifier circuits and recommended rated form factors of motors associated with these ranges are given in Table 14-2.

[1]These terms are taken from IEEE Std 100.

Copyright National Electrical Manufacturers Association
Provided by IHS under license with NEMA
No reproduction or networking permitted without license from IHS
Not for Resale

Table 14-2
RECOMMENDED RATED FORM FACTORS

Typical Combination of Power Source and Rectifier Type	Range of Armature Current Form Factors*	Recommended Rated Form Factors of Motors
Single-phase thyristor (SCR) or thyratron with or without back rectifiers:		
Half-wave	1.86–2	2
Half-wave	1.71–1.85	1.85
Half-wave or full-wave	1.51–1.7	1.7
Full-wave	1.41–1.5	1.5
Full-wave	1.31–1.4	1.4
Full-wave		1.3
	1.21–1.3	
Three-phase thyristor (SCR) or thyratron with or without back rectifiers:		
Half-wave	1.11–1.2	1.2
Full-wave	1.0–1.1	1.1

*The armature current form factor may be reduced by filters or other circuit means which will allow the use of a motor with a lower rated form factor.

14.61 OPERATION OF DIRECT-CURRENT MEDIUM MOTORS ON RECTIFIED ALTERNATING CURRENT

When a direct-current medium motor is operated from a rectified alternating-current supply, its performance may differ materially from that of the same motor when operated from a low-ripple direct-current source of supply, such as a generator of a battery. The pulsating voltage and current wave forms may increase temperature rise and noise and adversely affect commutation and efficiency. Because of these effects, it is necessary that direct current motors be designed or specially selected to operate on the particular type of rectified supply to be used.

Part 10.60 describes the basis of rating direct-current motors intended for use with rectifier power supplies. These ratings are based upon tests of the motors using a test power supply specified in 12.62 because these power supplies are in common use. It is impractical to design a motor or develop a standard for every type of power supply.

A motor may, under some conditions, be applied to a power supply different from that used for the test power supply as the basis of rating. All direct-current motors intended for use on rectifier power supplies may be used on low-ripple power supplies such as a direct-current generator or a battery.

Because the letters used to identify the power supplies in common use have been chosen in alphabetical order of increasing magnitude of ripple current, a motor rated on the basis of one of these power supplies may be used on any power supply designated by a lower letter of the alphabet. For example, a motor rated on the basis of an "E" power supply may be used on a "C" or "D" power supply.

If it is desired to use a motor on a power supply designated by a higher letter of the alphabet than the one on which it was rated, it may be necessary to add an inductance external to the motor to limit the ripple current to the magnitude implied by the motor rating.

For operation of direct-current motors on power supplies other than those described in 12.62, the combination of the power supply and the motor should be considered in consultation with the motor manufacturer.

14.62 ARMATURE CURRENT RIPPLE

Peak-to-peak armature current ripple is defined as the difference between the maximum value of the current wave form and the minimum value. The peak-to-peak armature current ripple may be expressed as a percent of the average armature current. The peak-to-peak armature current ripple is best measured on an oscilloscope incorporating capability for reading both direct-current and alternating-current values. An alternative method is to use a peak-to-peak-reading volt-meter, reading the voltage drop across a non-inductive resistance in series with the armature circuit.

The rms value of the ripple current cannot be derived from peak-to-peak values with any degree of accuracy because of variations in current wave form, and the converse relationship of deriving peak-to-peak values from rms values is at least equally inaccurate.

Armature current ripple of a motor-rectifier circuit may be estimated by calculation. For this purpose, the inductance of the motor armature circuit must be known or estimated, including the inductance of any components in the power supply which are in series with the motor armature. The value of the motor inductance will depend upon the horsepower, speed and voltage rating and the enclosure of the motor and must be obtained from the motor manufacturer. The method of calculation of the armature current ripple should take into account the parameters of the circuit, such as the number of phases, the firing angle, half-wave, with or without back rectifier, etc., and whether or not the current is continuous or discontinuous. Some methods of calculation are described in the following references:

"Characters of Phase-controlled Bridge Rectifiers with DC Shunt Motor Load" by R. W. Pfaff, AIEE Paper 58-40, *AIEE Transactions*, Vol. 77, Part II, pp. 49–53.

"The Armature Current Form Factor of a DC Motor Connected to a Controlled Rectifier" by E. F. Kubler, AIEE Paper 59-128, *AIEE Transactions*, Vol 78, Part IIIA, pp. 764–770.

The armature current ripple may be reduced by filtering or other circuit means. A reduction in the rms armature current ripple reduces the heating of a motor, while a

Copyright National Electrical Manufacturers Association
Provided by IHS under license with NEMA
No reproduction or networking permitted without license from IHS

Not for Resale

reduction in peak-to-peak armature current ripple improves the commutating ability of the motor.

14.63 OPERATION ON A VARIABLE-VOLTAGE POWER SUPPLY

The temperature rise of motors, when operated at full-load torque and at reduced armature voltage, will vary with the construction, with the enclosure, with the percentage of base speed and with the type of power supply. All self-ventilated and totally-enclosed motors suffer a loss of heat dissipating ability as the speed is reduced below the rated base speed, and this may require that the torque load be reduced to avoid overheating of the motor. In addition to this effect, it is characteristic of some rectifier circuits that the armature current ripple at rated current increases as the armature voltage is reduced, and this may require further load torque reduction. In general, such motors are capable of operation at 67 percent of rated torque at 50 percent of base speed without injurious heating. It is impractical to develop a standard for motors so operated, but derating data can be obtained from the motor manufacturer to determine if the motor will be satisfactory for a particular application.

WARNING: Motors operated from variable voltage power supplies, should not be used in any Division 1 hazardous (classified) locations unless:

a. The motor is identified on the nameplate as acceptable for variable speed operation when used in Division 1 hazardous (classified) locations.
b. The actual operating speed range is not outside of the permissible operating speed range marked on the motor nameplate.
c. The actual power supply is consistent with the type of power supply identified in information which is supplied by the motor manufacturer.

For motors to be used in any Division 2 hazardous (classified) locations, the motor manufacturer should be consulted.

Failure to comply with this warning could result in an unsafe installation that could cause damage to property, serious injury, or death to personnel, or both.

14.64 SHUNT FIELD HEATING AT STANDSTILL

In some applications of direct-current motors, the user may want to apply voltage to the shunt field winding during periods when the motor is stationary and the armature circuit is not energized. The percent of rated shunt field voltage and the duration of standstill excitation which a direct-current motor is capable of withstanding without excessive temperature will vary depending upon the size, enclosure, rating, and type of direct-current motor.

Some direct-current motors are designed to be capable of continuous excitation of the shunt field at standstill with rated field voltage applied. Under this condition, the shunt field temperature may exceed rated temperature rise, and prolonged operation under this condition may result in reduced insulation life.

Other direct-current motors require that the excitation voltage applied be reduced below the rated value if prolonged standstill excitation is planned to avoid excessive shunt field temperature.

The motor manufacturer should be consulted to obtain the heating capability of a particular direct-current motor.

14.65 BEARING CURRENTS

When a direct-current motor is operated from some unfiltered rectifier power supplies, bearing currents may result. Ripple currents, transmitted by capacitive coupling between the rotor winding and the core, may flow through the ground path to the transformer secondary. While these currents are small in magnitude, they may cause damage to either antifriction or sleeve bearings under certain circumstances.

14.66 EFFECT OF 50-HERTZ ALTERNATING-CURRENT POWER FREQUENCY

If a direct-current medium motor is to be applied to a rectifier system having a 50-hertz input frequency where the test power supply used as the basis of rating has a 60-hertz input frequency, the magnitude of the current ripple may be affected. In general, when other factors are equal, the ripple magnitude will be in approximate inverse ratio of the frequencies. A number of methods exist for compensating for the increase in ripple:

a. Add an external inductance equal to 20 percent of the original armature circuit inductance (including the motor) to obtain the same magnitude of ripple current as is obtained with the test power supply.
b. Utilize a motor designed for use on a 50-hertz test power supply.
c. Derate the horsepower rating of the motor.
d. Select a different power supply such that the current ripple at 50 hertz will not exceed the current ripple of the test power supply.

Data should be obtained from the motor manufacturer to determine if the motor will be satisfactory for a particular application.

14.67 APPLICATION OF OVERHUNG LOADS TO MOTOR SHAFTS[1]

14.67.1 Limitations

Figure 14-3 shows minimum design limits for overhung loads for dc motors having shaft extensions designated by the frame subscript AT. These limits should not be exceeded. Bearing and shaft failure constitute a safety hazard and safeguards suitable to each application should be taken.

Figure 14-3 shows limits for loads applied at the end of the shaft and at the center of the N-W dimension. In general, the closer the load is applied to the motor bearing

Copyright National Electrical Manufacturers Association
Provided by IHS under license with NEMA
No reproduction or networking permitted without license from IHS

Not for Resale

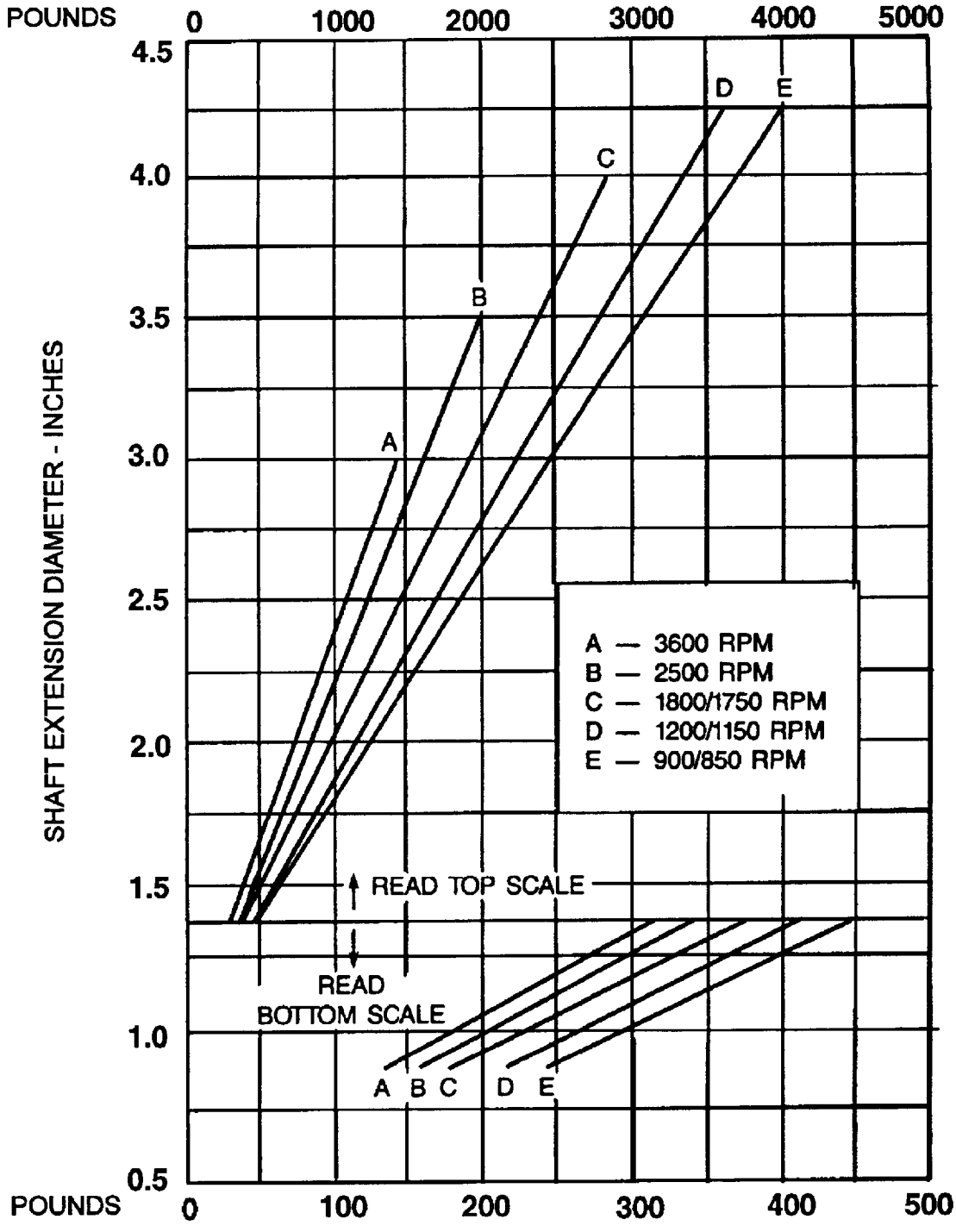

Figure 14-3
SHAFT LOADING FOR DC MOTORS HAVING AT FRAME DESIGNATION—RADIAL OVERHUNG LOAD—END OF SHAFT

NOTES
1—For load at center of N-W dimensions add 10%.
2—For intermediate speeds interpolate between curves.
3—ATS shafts are exluded. Consult manufacturer for load capabilities.
4—See 14.67 for additional application information.

Copyright National Electrical Manufacturers Association
Provided by IHS under license with NEMA
No reproduction or networking permitted without license from IHS

Not for Resale

the less will be the load on the bearing and the greater the assurance of trouble-free service. The center of the load should not be beyond the end of the shaft.

In the case of a sheave or pulley, the inner edge should not be closer to the bearing than the shoulder on the shaft but should be as close to this point as possible.

In the case of chain sprocket or gears, the outer edge of the sprocket or gear should not extend beyond the end of the motor shaft.

Shaft loads due to the weight of flywheels or other heavy shaft mounted components are not covered by Figure 14-3. Such loads affect system natural frequencies and should only be undertaken after consultation with the motor manufacturer.

Applications which result in a thrust or axial component of load such as helical gears are also not covered by Figure 14-3. The motor manufacturer should be consulted concerning these applications.

14.67.2 V-Belt Drives

The most common application that results in an overhung load on the shaft is a V-belt drive. V-belts are friction devices and depend on tension in the belts to prevent slipping. The following equation may be used to calculate the shaft load due to belt pull. Should the load exceed the values shown in Figure 14-3 the load should be reduced by reducing the belt tension which may cause belt slippage or by increasing the sheave diameter.

$$L_B = \frac{2N_B}{0.9}\left(16\,P_A - Y - \frac{MV^2}{10^6}\right) F_v \text{ lb}$$

Where:

L_B = Shaft overhung load due to belt tension, lb

N_B = Number of belts

P_A = Force required to deflect one belt l/64 inch per inch of span, lbs

Y = $2\,(f_{avg})\,(\frac{1}{64})^2$ where f is a strain constant based on the type and section of belt. Available from belt manufacturer

M = 0.9 m where m is the weight per unit length, lb/in. of the type and section of belt. Available from belt manufacturer.

V = Belt speed, ft/min

F_v = Vector sum correction factor. Corrects tight side and slack side tension vectors for unequal driver/driven sheave diameter. Assumes 5:1 tension ratio. Available in belt manufacturer's catalogs.

The above calculation should be made after all parameters are known and P_A measured on the actual installation. Pre-installation calculations may be made by calculating the belt static tension required by the application and the value of P_A necessary to attain that tension.

$$T_S = 15\left(\frac{2.5 - G}{G}\right)\left(\frac{DHP \times 10^3}{V\,N_B}\right) + \frac{MV^2}{10^6} \text{ lb}$$

Where:

T_S = Belt static tension required by the application.

G = Arc of contact correction factor. Available from belt manufacturer.

DHP= Drive horsepower, belt service factor × motor hp.

Having calculated the required belt static tension, the minimum value of P_A to attain the required static tension is:

$$P_A\ (MIN) = \frac{T_S + Y}{16}$$

This value may now be used in the first equation for pre-installation application calculations. In actual practice, a value up to 50% greater than P_A (MIN) is sometimes used. In this case, the higher value should be used in the first equation.

14.67.3 Applications Other Than V-Belts

Shaft loads may also occur from applications other than V-belts. Examples are timing belts, sprocket chains and gears. Generally these will have little or no static tensioning and shaft overhung load will be a function of the transmitted torque. The shaft overhung load may be calculated by making a proper geometric analysis taking into account the parameters of the particular drive. Some of these parameters might be pitch diameter, tooth pressure angle, amount of pretensioning and anticipated transmitted torque.

14.67.4 General

The limits established in Figure 14-3 are maximums for acceptable service. For greater assurance of trouble-free service, it is recommended that lesser loads be used where possible. Larger pitch diameters and moving the load as close to the bearing as possible are helpful factors.

14.68 RATE OF CHANGE OF ARMATURE CURRENT

Direct-current motors can be expected to operate successfully with repetitive changes in armature current such as those which occur during a regular duty cycle provided that, for each change in current, the factor K, as defined in the following equation, does not exceed 25.

In the equation, the equivalent time for the current change to occur is the time which would be required for the change if the current increased or decreased at a uniform rate equal to the maximum rate at which it actually increases or decreases (neglecting any high-frequency ripple).

$$K = \frac{(\text{Change in armature current/rated armature current})^2}{\text{Equivalent time in seconds for current change to occur}}$$

Copyright National Electrical Manufacturers Association
Provided by IHS under license with NEMA
No reproduction or networking permitted without license from IHS

Not for Resale

For adjustable-speed motors, this capability applies for all speeds within the rated speed range by armature voltage control when operated from the intended power supply. Reduced limits may apply when operated in the field control (field weaken) range and the manufacturer should be consulted.

Copyright National Electrical Manufacturers Association
Provided by IHS under license with NEMA
No reproduction or networking permitted without license from IHS

Not for Resale

Section II
SMALL (FRACTIONAL) AND MEDIUM (INTEGRAL) MACHINES
Part 15
DC GENERATORS
RATINGS

15.0 SCOPE

The standards in this Part 15 of Section II cover direct-current generators built in frames with continuous drip-proof ratings, or equivalent capacities, rated 3/4 kilowatt at 3600 rpm up to and including generators having a continuous rating of 1.0 kW per rpm, open type.

15.10 KILOWATT, SPEED, AND VOLTAGE RATINGS

15.10.1 The kilowatt, speed, and voltage ratings of industrial direct-current generators and exciters shall be in accordance with Table 15-1.

15.10.2 Kilowatt ratings for direct-connected exciters shall be in accordance with 15.10.1. The speed must necessarily be that of the machine to which the exciter is coupled.

Table 15-1
KILOWATT, SPEED, AND VOLTAGE RATINGS

Rating kW	Speed, Rpm						Rating, Volts
¾	3450	1750	1450	1150	850	...	125 and 250
1	3450	1750	1450	1150	850	...	125 and 250
1½	3450	1750	1450	1150	850	...	125 and 250
2	3450	1750	1450	1150	850	...	125 and 250
3	3450	1750	1450	1150	850	...	125 and 250
4½	3450	1750	1450	1150	850	...	125 and 250
6½	3450	1750	1450	1150	850	...	125 and 250
9	3450	1750	1450	1150	850	...	125 and 250
13	3450	1750	1450	1150	850	...	125 and 250
17	3450	1750	1450	1150	850	...	125 and 250
21	3450	1750	1450	1150	850	...	125 and 250
25	3450	1750	1450	1150	850	...	125 and 250
33	3450	1750	1450	1150	850	...	125 and 250
40	3450	1750	1450	1150	850	...	125 and 250
50	3450	1750	1450	1150	850	...	125 and 250
65	...	1750	1450	1150	850	...	250
85	...	1750	1450	1150	850	...	250
100	...	1750	1450	1150	850	...	250
125	...	1750	1450	1150	850	...	250
170	...	1750	1450	1150	850	...	250
200	...	1750	1450	1150	850	720	250 and 500
240	...	1750	1450	1150	850	720	250 and 500
320	...	...	1450	1150	850	720	250 and 500
400	...	...	...	1150	850	720	250 and 500
480	...	...	...	...	...	720	500
560	...	...	...	...	850	720	500
640	...	...	...	...	850	720	500
720	...	...	...	...	850	720	500
800	...	...	...	1150	850	...	500

Copyright National Electrical Manufacturers Association
Provided by IHS under license with NEMA
No reproduction or networking permitted without license from IHS

Not for Resale

15.11 NAMEPLATE TIME RATING, MAXIMUM AMBIENT TEMPERATURE, AND INSULATION SYSTEM CLASS

Industrial direct-current generators shall have a continuous time rating.

Industrial direct-current generators shall be rated on the basis of a maximum ambient temperature and the insulation system class. The rated value of the maximum ambient temperature shall be 40°C unless otherwise specified, and the insulation system shall be Class A, B, F, or H. All such ratings are based upon a load test with temperature rise values not exceeding those shown for the designated class of insulation system in 15.41. Ratings of direct-current generators for any other value of maximum ambient temperature shall be based on temperature rise values calculated in accordance with 12.66.

15.12 NAMEPLATE MARKING

The following minimum amount of information shall be given on all nameplates. For abbreviations, see 1.80.

a. Manufacturer's type designation and frame number
b. Kilowatt output
c. Time rating (see 15.11)
d. Maximum ambient temperature for which the generator is designed (see Note 1 of 15.41 table)[1]
e. Insulation system designation (If field and armature use different classes of insulation systems, both insulation systems shall be given, that for the field being given first.)[1]
f. Rated speed in rpm
g. Rated load voltage
h. Rated field voltage when different from rated armature voltage[2]
i. Rated current in amperes
j. Winding—series, shunt, or compound

Note—Item a shall be optional.

[1]As an alternative, these items shall be permitted to be replaced by a single item reading "Temperature rise for rated continuous load."

[2]As an alternative, this item shall be permitted to be replaced by the following:

a. Field resistance in ohms at 25°C (optional)
b. Rated field current in amperes at rated load and speed

TESTS AND PERFORMANCE

15.40 TEST METHODS

Tests to determine performance characteristics shall be made in accordance with IEEE Std 113.

15.41 TEMPERATURE RISE OF DIRECT-CURRENT GENERATORS

The temperature rise, above the temperature of the cooling medium, for each of the various parts of direct-current generators, when tested in accordance with the rating, shall

	Totally Enclosed Nonventilated and Totally Enclosed Fan-Cooled Generators, Including Variations Thereof				Generators with all Other Enclosures			
Class of Insulation Systen (see 1.65)	A	B	F	H	A	B	F	H
Time Rating—Continuous								
Temperature Rise, Degrees C								
a. Armature windings and all windings other than those given in items b and c—resistance	70	100	130	155	70	100	130	155
b. Multi-layer field widings—resistance	70	100	130	155	70	100	130	155
d. Single-layer field windings with exposed uninsulated surfaces and bare copper windings—resistance	70	100	130	155	70	100	130	155

e. The temperature attained by cores, commutators, and miscellaneous parts (such as brushholders, brushes, pole tips, etc.) shall not injure the insulation or the machine in any respect.

NOTES

1—Abnormal deterioration of insulation may be expected if ambient temperature of 40°C is exceeded in regular operation.

2—The foregoing values of temperature rise are based upon operation at altitudes of 3300 feet (1000 meters) or less. For temperature rises for generators intended for operation at altitudes above 3300 feet (1000 meters), see 14.04.

3—When the rated maximum ambient temperature is other than 40°C, the rated value should be 50°C or 65°C. The maximum temperature rise values for each machine part should be the value selected from the appropriate table with adjustment as follows:

Rated Maximum Ambient Temperature, Degrees C	Adjustment to Temperature Rise Values, Degrees C
50	Subtract 10
65	Subtract 25

Copyright National Electrical Manufacturers Association
Provided by IHS under license with NEMA
No reproduction or networking permitted without license from IHS

Not for Resale

not exceed the values given in the following table. All temperature rises are based on a maximum ambient temperature of 40°C. Temperatures shall be determined in accordance with IEEE Std. 113.

15.42 SUCCESSFUL COMMUTATION

See 12.72.

15.43 OVERLOAD

The generators shall be capable of carrying for 1 minute, with successful commutation as defined in 12.72, loads of 150 percent of the continuous-rated amperes, with rheostat set for rated-load excitation. No temperature limit applies at this overload.

15.44 VOLTAGE VARIATION DUE TO HEATING

For flat-compound-wound dripproof direct-current generators rated 50 kilowatts and smaller and employing a Class B insulation system, the voltage at rated load, with the windings at ambient temperature within the usual service range, shall not exceed 112 percent of the voltage at rated load with the windings at the constant temperature attained when the generator is operating continuously at its rating and with the field rheostat set to obtain rated voltage at rated load.

15.45 FLAT COMPOUNDING

Flat-compounded generators shall have windings which will give approximately the same voltage at no load as at full load when operated at rated speed at a temperature equivalent to that which would be attained after a continuous run at rated load, and the field rheostat set to obtain rated voltage at rated load and left unchanged.

15.46 TEST FOR REGULATION

Combined regulation shall be measured in accordance with IEEE Std 113.

15.47 OVERSPEEDS FOR GENERATORS

Direct-current generators shall be so constructed that, in an emergency, they will withstand without mechanical injury an overspeed of 25 percent above rated speed.

15.48 HIGH-POTENTIAL TEST

15.48.1 Safety Precautions and Test Procedure

See 3.01.

15.48.2 Test Voltage

The effective value of the high-potential test voltages for direct-current generators shall be:

a. Generators of 250 watts output or more—1000 volts plus twice the rated voltage[1] of the generator.
b. Generators of less than 250 watts output having rated voltages not exceeding 250 volts—1000 volts. (Generators rated above 250 volts shall be tested in accordance with item a.)
EXCEPTION—Armature or field windings for connections to circuits of 35 volts or less shall be tested with 500 volts.

15.49 ROUTINE TESTS

Typical tests which may be made on direct-current generators are listed below. All tests should be made in accordance with IEEE Std 113.

a. Full-load readings[2] at rated voltage
b. No-load readings[2] with rheostat set as in item a.
c. High-potential test in accordance with 15.48

15.50 FIELD DATA FOR DIRECT-CURRENT GENERATORS

The following field data for direct-current generators may be used in supplying data to control manufacturers.

a. Manufacturer's name
b. Requisition or order number
c. Frame designation
d. Serial number
e. KW output
f. Shunt or compound-wound
g. Rated speed in rpm
h. Rated voltage
i. Rated current
j. Excitation voltage, or self excited
k. Resistance of shunt field at 25°C
l. Recommended value of resistance for rheostat for hand or regulator control
m. N.L. saturation

---

[1]Where the voltage rating of a separately excited field of a generator is not stated, it shall be assumed to be 1.5 times the field resistance in ohms at 25°C times the rated field current.

[2]The word "readings" includes the following:
a. Speed in revolutions per minute
b. Voltage at generator terminals
c. Amperes in armature
d. Amperes in shunt field

Copyright National Electrical Manufacturers Association
Provided by IHS under license with NEMA
No reproduction or networking permitted without license from IHS
Not for Resale

	Percent Rated Armature Voltage	Field Current, Amperes
Max. field rheostat out		
	100	
	50	
Shunt field current at rated voltage and load		

15.51 REPORT OF TEST FORM

For typical test forms, see IEEE Std 113.

15.52 EFFICIENCY

Efficiency and losses shall be determined in accordance with IEEE Std 113 using the direct measurement method or the segregated losses method. The efficiency shall be determined at rated output, voltage, and speed.

The following losses shall be included in determining the efficiency:

a. I^2R loss of armature
b. I^2R loss of series windings (including commutating, compounding, and compensating fields, where applicable)
c. I^2R loss of shunt field[1]
d. Core loss
e. Stray load loss
f. Brush contact loss
g. Brush friction loss
h. Exciter loss if exciter is supplied with and driven from the shaft of the machine
i. Ventilating losses
j. Friction and windage loss[2]

In determining I^2R losses, the resistance of each winding shall be corrected to a temperature equal to an ambient temperature of 25°C plus the observed rated load temperature rise measured by resistance. Where the rated load temperature rise has not been measured, the resistance of the winding shall be corrected to the following temperature.

Class of Insulation System*	Temperature, Degrees C
A	85
B	110
F	135
H	155

*Where the rated temperature rise is that of a lower class of insulation system, the temperature used for resistance correction shall be that of the lower insulation class.

MANUFACTURING

15.60 DIRECTION OF ROTATION

See 14.06.

15.61 EQUALIZER LEADS OF DIRECT-CURRENT GENERATORS

Between any two compound-wound generators, the equalizer connection circuit should have a resistance not exceeding 20 percent of the resistance of the series field circuit of the smaller generator. However, lower values of resistance are desirable.

[1] For separately excited generators, the shunt field I^2R loss shall be permitted to be omitted from the efficiency calculation if so stated.

[2] In the case of generators furnished with thrust bearings, only that portion of the thrust bearing loss produced by the generator itself shall be included in the efficiency calculations. Alternatively, a calculated value of efficiency, including bearing loss due to external thrust load, shall be permitted to be specified.
In the case of generators furnished with less than a full set of bearings, friction and windage losses which are representative of the actual installation shall be determined by (1) calculation (2) experience with shop test bearings and shall be included in the efficiency calculations.

Copyright National Electrical Manufacturers Association
Provided by IHS under license with NEMA
No reproduction or networking permitted without license from IHS

Not for Resale

Section II
SMALL (FRACTIONAL) AND MEDIUM (INTEGRAL) MACHINES
Part 16
SYNCHRONOUS GENERATORS—GENERAL PURPOSE

DEFINITION

16.0 SCOPE

The standards in this Part 16 of Section II cover alternating-current generators up to and including the ratings built in frames corresponding to the continuous open-type ratings given in the table below.

Synchronous Speeds, Rpm	Generators, Synchronous, Revolving Field Type, kW at 0.8 Power Factor
3600	400
1800	400
1200	350*
900	250*

*These are large machines.

16.01 DEFINITION

A general-purpose synchronous generator is a continuous-duty synchronous generator which incorporates all of the following and is designed with operating characteristics for general use under usual service conditions.

a. Kilovoltampere and speed ratings as given in 16.11
b. Voltage rating in accordance with 16.12
c. Overload rating in accordance with 16.41
d. Frequency rating of 60 hertz
e. Open construction

RATINGS

16.10 BASIS OF RATING

General-purpose synchronous generators shall have a prime power rating on a continuous duty basis, and the rating shall be expressed in kilovoltamperes available at the terminals at 0.8 power factor lagging (overexcited). The corresponding kilowatts shall also be stated.

General-purpose synchronous generators may have a standby continuous rating in accordance with 16.85.

16.11 KILOVOLTAMPERE (KILOWATT) AND SPEED RATINGS

Kilovoltampere and speed ratings at 60 hertz shall be in accordance with Table 16-1.

16.12 VOLTAGE RATINGS

16.12.1 Broad Range Ratings—Voltage Ratings, Volts

Three Phase

208–240/416-480

Table 16-1
KILOVOLTAMPERE AND SPEED RATINGS

kVA	(KW)	Synchronous Speed, Rpm			
1.25	1.0	3600	1800	1200	...
2.5	2.0	3600	1800	1200	...
3.75	3.0	3600	1800	1200	...
6.25	5	3600	1800	1200	...
9.4	7.5	3600	1800	1200	...
12.5	10	3600	1800	1200	...
18.7	15	3600	1800	1200	...
25	20	3600	1800	1200	...
31.3	25	3600	1800	1200	...
37.5	30	3600	1800	1200	...
50	40	3600	1800	1200	...
62.5	50	3600	1800	1200	900
75	60	3600	1800	1200	900
93.8	75	3600	1800	1200	900
125	100	3600	1800	1200	900
156	125	3600	1800	1200	900
187	150	3600	1800	1200	900
219	175	3600	1800	1200	900
250	200	3600	1800	1200	900
312	250	3600	1800	1200	...
375	300	3600	1800	1200	...
438	350	3600	1800	1200	...
500	400	3600	1800	....	...

NOTE—It is not practical to build synchronous generators of all kVA ratings at all speeds and for all voltage ratings.

Copyright National Electrical Manufacturers Association
Provided by IHS under license with NEMA
No reproduction or networking permitted without license from IHS

Not for Resale

16.12.2 Discrete Ratings—Voltage Ratings, Volts

Three Phase	Single Phase
208Y/120	120
240	120/240
480	240
480Y/277	
240/480	
600	
2400	
4160Y/2400	

NOTES
1—For variation from rated voltage see 16.47.
2—It is not practical to build synchronous generators of all kVA ratings for all of these voltage ratings.

TESTS AND PERFORMANCE

16.40 TEMPERATURE RISE

The temperature rise, above the temperature of the cooling medium, for each of the various parts of the generator shall not exceed the values given in the following table when tested in accordance with the rating. Temperature rises are based on a maximum ambient temperature of 40°C. Temperatures shall be determined in accordance with IEEE Std 115.

Class of Insulation System (See 1.65)	A	B	F*	H*
Time Ratings—Continous				
Temperature Rise, Degrees C				
a. Armature Windings—resistance	60	80	105	125
b. Field Windings—resistance.....	60	80	105	125
c. The temperature attained by cores, amortisseur windings, collector rings, and miscellaneous parts (such as brush-holders, brushes, etc.) shall not injure the insulation or the machine in any respect.				

* Where a Class F or H insulation system is used, special consideration should be given to bearing temperatures, lubrication, etc.
NOTES
1—The foregoing values of temperature rise are based upon operation at altitudes of 3300 feet (1000 meters) or less. For temperature rises for generators intended for operation at altitudes above 3300 feet (1000 meters), see 14.04.
2—The temperature rises given in the above table are based upon a reference ambient temperature of 40°. Generators intended for use in any other ambient temperatures should have temperature rises not exceeding the value calculated from the formula below, rounded off to the nearest 5 degrees:

$$\text{temperature rise} = 0.9\,(T_c - T_a)$$

Where:
T_a = ambient temperature
T_c = 105°C for Class A insulation system
130°C for Class B Insulation system
155°C for Class F insulation system
180°C for Class H insulation system

When a higher ambient temperature than 40°C is required, recommended values of ambient temperature are 50°C, 65°C, 90°C, and 115°C.
Temperature rise adjustment for ambients between 10°C and 40°C shall be subject to agreement between manufacturer and user. No adjustment shall apply for ambients below 10°C.
3—Temperature rises in the above table are based upon generators rated on a prime power continuous duty basis. Synchronous generators may be rated on a standby duty basis (see 16.85). In such cases, it is recommended that temperature rises not exceed those in the foregoing table by more than 25°C under continuous operation at the standby rating.

16.41 OVERLOAD CAPABILITY

General-purpose prime-power-rated synchronous generators and their exciters (if provided) shall be suitable for operation at a generator overload of 10 percent for 2 hours out of any consecutive 24 hours of operation.

When operated at any load greater than rated load the temperature rise will increase and may exceed the temperature rises specified in 16.40.

Copyright National Electrical Manufacturers Association
Provided by IHS under license with NEMA
No reproduction or networking permitted without license from IHS
Not for Resale

16.42 MAXIMUM DEVIATION FACTOR

The deviation factor of the open-circuit line-to-line terminal voltage shall not exceed 0.1.

16.43 TELEPHONE INFLUENCE FACTOR

When telephone influence factor is specified, the balanced telephone influence factor (TIF) shall not exceed the following values. See 22.43 for definition and test method.

kVA Rating of Generator	TIF
6.25 to 62	250
62.5 to 500	150

16.44 EFFICIENCY

Efficiency and losses shall be determined in accordance with IEEE Std 115. The efficiency shall be determined at rated output, voltage, frequency, power factor, and balanced load conditions.

The following losses shall be included in determining the efficiency:

a. I^2R loss of armature
b. I^2R loss of field
c. Core loss
d. Stray load loss
e. Friction and windage loss
f. Exciter loss if provided

In determining I^2R losses, the resistance of the windings shall be corrected to the following temperature:

Class of Insulation System	Temperature, Degrees C
A	75
B	95
F	115
H	130

Where the rated temperature rise is that of a lower class of insulation system, the temperature for resistance correction shall conform to the lower class.

In the case of a generator furnished with less than a full set of bearings, friction and windage losses which are representative of the actual installation shall be included as determined by (1) calculation or (2) experience with shop test bearings.

16.45 SHORT-CIRCUIT CAPABILITIES

General-purpose synchronous generators and their exciters (if provided) shall be capable of withstanding a three-phase short circuit at the generator terminals when operating initially at rated kilovoltamperes and power factor at 5-percent overvoltage on discrete voltage generators and within the broad-range voltage on broad-range-voltage-rated generators provided that the symmetrical positive phase sequence current (I), expressed in per unit of stator current at rated kVA, and the duration of the fault in seconds, t, are limited to the values which give an integrated product, $(I)^2t$, equal to or less than 90.

The generator and exciter shall also be capable of withstanding at the generator terminals any other short circuit of 30 seconds or less, provided:

a. The machine phase currents under fault conditions are such that the negative phase sequence current, (I_2), expressed in per unit of stator current at rated kVA, and the duration of the fault in seconds, t, are limited to values which give an integrated product, $(I_2)^2t$, equal to or less than 40
b. The maximum phase current is limited by external means to a value which does not exceed the maximum phase current obtained from the 3-phase fault

16.46 OVERSPEEDS

General-purpose synchronous generators and their exciters (if provided) shall be so constructed that, in an emergency not to exceed 2 minutes, they will withstand without mechanical injury overspeeds above synchronous speed in accordance with the following:

Synchronous Speed, Rpm	Overspeed, Percent of Synchronous Speed
1801 and over	20
1800 and below	25

16.47 VARIATION FROM RATED VOLTAGE

16.47.1 Broad Range

Synchronous generators shall be capable of delivering rated output (kVA) at rated frequency and power factor, at any voltage within the broad range (see 16.12.1) in accordance with the standards of performance established in this Part 16.

16.47.2 Discrete Ratings

Synchronous generators shall be capable of delivering rated output (kVA) at rated frequency and power factor, at any voltage not more than 5 percent above or below rated voltage but not necessarily in accordance with the standards of performance established for operation at rated voltage (see 16.12.2).

16.48 SYNCHRONOUS GENERATOR TRANSIENT VOLTAGE REGULATION (VOLTAGE DIP)

16.48.1 General

When a synchronous generator is subjected to a sudden load change there will be a resultant time-varying change in terminal voltage. One function of the exciter-regulator system is to detect this change in terminal voltage and to vary the field excitation as required to restore the terminal

Copyright National Electrical Manufacturers Association
Provided by IHS under license with NEMA
No reproduction or networking permitted without license from IHS

Not for Resale

voltage. The maximum transient deviation in output voltage that occurs is a function of (1) the magnitude, power factor, and rate of change of the applied load; (2) the magnitude, power factor, and current versus voltage characteristic of any initial load; (3) the response time and voltage forcing capability of the exciter-regulator system; and (4) the prime mover speed versus time following the sudden load change. Transient voltage performance is therefore a system performance criterion involving the generator, exciter, regulator, and prime mover and cannot be established based on generator data alone. The scope of this section is only the generator and exciter-regulator system. Performance of the prime mover, its governor, and associated controls are outside the scope of NEMA standards.

In selecting or applying synchronous generators, the maximum transient voltage deviation (voltage dip) following a sudden increase in load is often specified or requested. When requested by the purchaser, the generator manufacturer should furnish expected transient voltage regulation, assuming either of the following criteria applies.

a. Generator, exciter, and regulator furnished as integrated package by the generator manufacturer
b. Complete data defining the transient performance of the regulator (and exciter if applicable) is made available to the generator manufacturer

When furnishing expected transient voltage regulation, the following conditions should be assumed unless otherwise specified.

a. Constant speed (rated)
b. Generator, exciter, regulator initially operating at no load, rated voltage, starting from ambient temperature
c. Application of a constant impedance linear load as specified

16.48.2 Definitions

See Figure 16-1.

16.48.2.1 TRANSIENT VOLTAGE REGULATION

Transient voltage regulation is the maximum voltage deviation that occurs as the result of a sudden load change.

NOTE—Transient voltage regulation may be voltage rise or a voltage dip and is normally expressed as a percent of rated voltage.

16.48.2.2 VOLTAGE DIP

Voltage dip is the transient voltage regulation that occurs as the result of a sudden increase in load. (See Figure 16-1.)

NOTE—Voltage dip is normally expressed as a percent of rated voltage.

16.48.2.3 TRANSIENT VOLTAGE OVERSHOOT

Transient voltage overshoot is the maximum voltage overshoot above rated voltage that occurs as a result of the response of the exciter-regulator system to a sudden increase in load. (See Figure 16-1.)

NOTE—Transient voltage overshoot is normally expressed as a percent of rated voltage.

16.48.2.4 STEADY-STATE VOLTAGE REGULATION

Steady-state voltage regulation is the settled or steady-state voltage deviation or excursion that occurs as the result

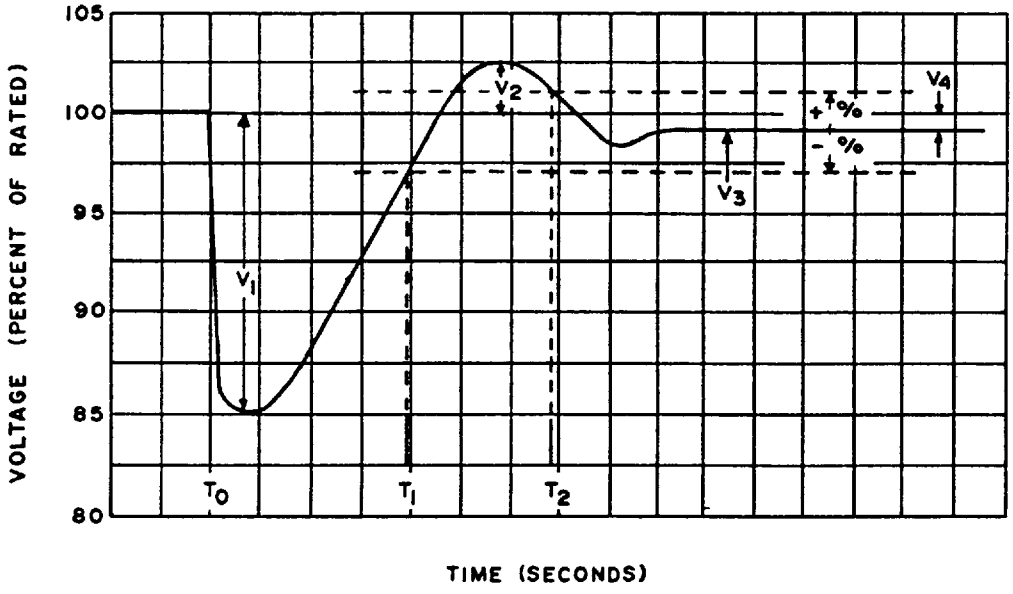

V_1 = Voltage dip
V_2 = Maximum transient voltage overshoot
V_3 = Recovery voltage
V_4 = Steady-state regulation

T_0 = Point at which load is applied
T_1 = Time to recover to a specified band
T_2 = Time to recover to and remain within the specified band

Figure 16-1
GENERATOR TRANSIENT VOLTAGE VERSUS TIME FOR SUDDEN LOAD CHANGE

Copyright National Electrical Manufacturers Association
Provided by IHS under license with NEMA
No reproduction or networking permitted without license from IHS
Not for Resale

of a load change after all transients due to the load change have decayed to zero. (See Figure 16-1.)

NOTE—Steady-state voltage regulation is normally expressed as a percent of rated voltage for any load between no load and rated load with the range of unity (1.0) to rated power factor.

16.48.2.5 RECOVERY VOLTAGE

Recovery voltage is the maximum obtainable voltage for a specified load condition.

NOTE—Recovery voltage is normally expressed as a percent of rated voltage. For loads in excess of rated, recovery voltage is limited by saturation and field forcing capability.

16.48.2.6 RECOVERY TIME

Recovery time is the time interval required for the output voltage to return to a specified condition following a specified sudden load change. (See Figure 16-1.)

16.48.3 Voltage Recorder Performance

a. Response time ≤ 1 millisecond

b. Sensitivity ≥ 1 percent per millimeter

NOTES

1—When peak-to-peak recording instruments are used, readings of the steady-state terminal voltage before and after load application should be made with an rms-indicating instrument in order to determine minimum transient voltage (see Figure 16-2).

2—See IEEE Std 115 for care in calibration of oscillograph.

16.48.4 Examples

Strip charts of the output voltage as a function of time demonstrate the transient performance of the generator, exciter, and regulator system to sudden changes in load. The entire voltage envelope should be recorded to determine the performance characteristics.

Strip charts representing two type of voltage recorders are illustrated in Figures 16-1 and 16-2. The labeled charts and sample calculations should be used as a guide in determining generator-exciter-regulator performance when subjected to a sudden load change.

16.48.5 Motor Starting Loads

The following test procedure and presentation of data is recommended for evaluating the motor starting capability of a synchronous generator, exciter, and regulator system.

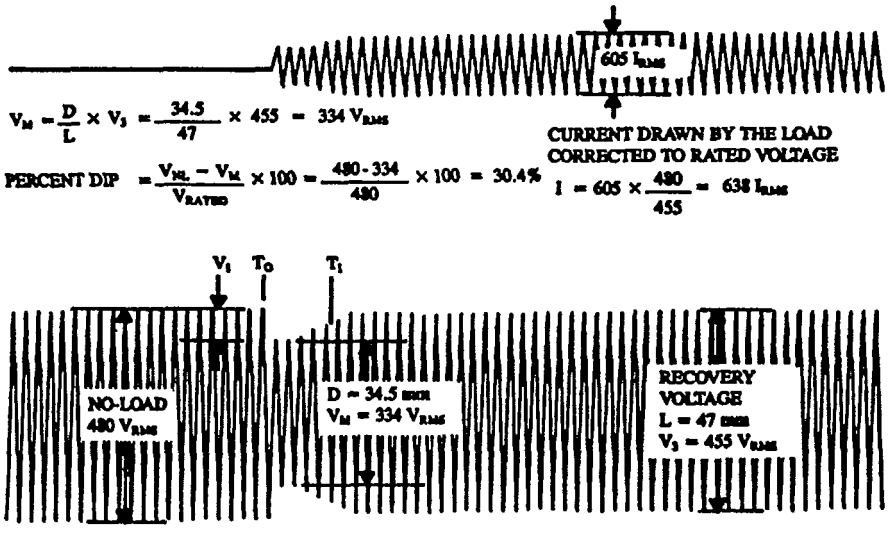

V_I = voltage dip
V_{RATED} = rated terminal voltage = 480 V.
V_{NL} = no-load voltage (RMS voltmeter reading)
L = measured (mm) peak to peak amplitude
V_3 = steady-state voltmeter reading RMS
D = measured (mm) minimum peak to peak amplitude
V_M = calculated minimum transient voltage
T_O = instant at which load is applied
T_I = time to recover to specified band

Figure 16-2
GENERATOR TRANSIENT VOLTAGE VERSUS TIME FOR SUDDEN LOAD CHANGE

Copyright National Electrical Manufacturers Association
Provided by IHS under license with NEMA
No reproduction or networking permitted without license from IHS
Not for Resale

16.48.5.1 LOAD SIMULATION

a. Constant impedance (non-saturable reactive load.)

b. Power factor ≤ 0.3 lagging

NOTE—The current drawn by the simulated motor starting load should be corrected by the following ratio whenever the generator terminal voltage fails to return to rated voltage:

$$\frac{\text{V (rated voltage)}}{\text{V (recovery voltage)}}$$

This value of current and rated terminal voltage should be used to determine the actual kVA load applied.

16.48.5.2 TEMPERATURE

The test should be conducted with the generator and excitation system initially at ambient temperature.

16.48.5.3 PRESENTATION OF DATA

Transient voltage regulation performance curves should be identified as "Voltage Dip" (in percent of rated voltage) versus "kVA Load" (see Figure 16-3).

The performance characteristics will vary considerably for broad voltage range generators (see 16.12.1) when operating over the broad voltage adjust range. Therefore, the percent voltage dip versus kVA load curve provided for broad voltage range generators should show the performance at the extreme ends of the operating range; i.e., 208–240/416–480V. For discrete voltage generators, the percent voltage dip versus kVA load curve should show the performance at the discrete rated voltage(s).

Unless otherwise noted, the percent voltage dip versus kVA load curve should provide a voltage recovery to at least 90 percent of rated voltage. If the recovery voltage is less than 90 percent of rated voltage, a point on the voltage dip curve beyond which the voltage will not recover to 90 percent of voltage should be identified or a separate voltage recovery versus kVA load curve should be provided.

In the absence of manufacturers' published information, the value of voltage dip may be estimated from machine constants, subject to the conditions set forth in 16.48.1 and the following.

a. Voltage regulator response time ≤ 17 milliseconds

b. $\dfrac{\text{Excitation system ceiling voltage}^*}{\text{Rated field voltage}} \geq 1.5$

c. $\text{Voltage dip} = \dfrac{X'_d}{X_L + X'_d}$, percent

Where:

X'_d = direct access transient reactance, per unit

X_L = applied load, per unit on generator kVA base

or $X_L = \dfrac{\text{kVA rated}}{\text{kVA (low power factor load)}}$

Data estimated in accordance with the above calculation should be identified as "Calculated Voltage Dip."

*See IEEE Std 421

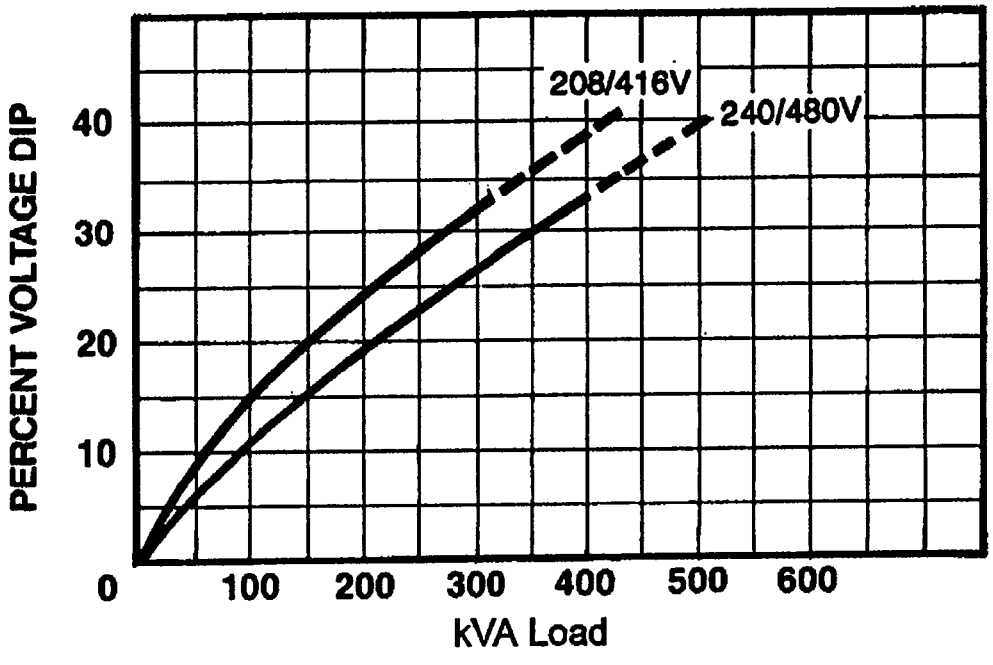

Figure 16-3
PERFORMANCE CURVES (PF ≤ 0.3) (STEP LOADING)

Copyright National Electrical Manufacturers Association
Provided by IHS under license with NEMA
No reproduction or networking permitted without license from IHS
Not for Resale

16.49 PERFORMANCE SPECIFICATION FORMS

16.49.1 Slip-Ring Synchronous Generators

The specification form for listing performance data on synchronous generators with slip rings shall be as follows.

Date _____

SLIP-RING SYNCHRONOUS GENERATOR RATING

kVA	Power Factor	kW	Rpm	Number of Poles	Phase	Hertz	Volts	Amperes	Frame

Description:

Is amortisseur winding included? _____

kVA	Power Factor	Temperature Rise (Degrees C) Not to Exceed		Excitation Requirements (Maximum)	
		Armature Winding	Field Winding		
		Resistance	Resistance	kW	Exciter Rated Voltage

Rating and temperature rise are based on cooling air not exceeding 40°C and altitude not exceeding 3300 feet (1000 meters). High-potential test in accordance with 16.51. The rotor of the generator and the armature of the direct-connected exciter, when used, will stand an overspeed of _____ percent without mechanical injury.

Minimum Efficiencies							
kVA	Power Factor	kW		Full Load	¾ Load	½ Load	

Efficiencies are determined by including I^2R losses of armature and field windings at _____ °C, core losses, stray-load losses, and friction and windage losses.* Exciter loss is included if supplied with and driven from shaft of machine. Field rheostat losses are not included.

*In the case of a generator furnished with less than a full set of bearings, friction and windage losses representative of the actual installation are included as determined by (a) calculation or (b) experience with shop test bearings.

Approximate Data	
Wk^2 of the Generator	Pr Synchronizing Power per Electrical Radian

Approximate Weight, Pounds

Copyright National Electrical Manufacturers Association
Provided by IHS under license with NEMA
No reproduction or networking permitted without license from IHS
Not for Resale

16.49.2 Brushless Synchronous Generators

The specification form for listing performance data on brushless synchronous generators shall be as follows:

Date _____

BRUSHLESS SYNCHRONOUS GENERATOR RATING

kVA	Power Factor	kW	Rpm	Number of Poles	Phase	Hertz	Volts	Amperes	Frame

Description:

Is amortisseur winding included? _____

kVA	Power Factor	Temperature Rise (Degrees C) Not to Exceed			Excitation Requirements* (2) (Maximum)	
			Armature Winding	Field Winding		
			Resistance	Resistance	kW	Exciter Rated Field Voltage
		Generator				
		Exciter* (1)				

*For rotating transformer give (1) data for equivalent winding temperatures and (2) input kVA and voltage instead of excitation for exciter.

Rating and temperature rise are based on cooling air not exceeding 40°C and altitude not exceeding 3300 feet (1000 meters). High-potential test in accordance with 16.51. The rotor of the generator and the armature of the direct-connected exciter, when used, will stand an overspeed of _____ percent without mechanical injury.

Minimum Efficiencies							
kVA	Power Factor	kW		Full Load	¾ Load	½ Load	

Efficiencies are determined by including I^2R losses of generator and exciter armature and field windings at _____ °C, generator and exciter core losses, stray-load losses, and friction and windage losses.** Field rheostat losses are not included. When furnished with rotating transformer, replace exciter losses with equivalent transformer losses.

**In the case of a generator furnished with less than a full set of bearings, friction and windage losses representative of the actual installation are included as determined by (a) calculation or (b) experience with shop test bearings.

Approximate Data	
Wk^2 of the Generator	Pr Synchronizing Power per Electrical Radian

Approximate Weight, Pounds

Copyright National Electrical Manufacturers Association
Provided by IHS under license with NEMA
No reproduction or networking permitted without license from IHS
Not for Resale

16.50 ROUTINE FACTORY TESTS

The following tests shall be made on generators and (if provided) their exciters.

a. Resistance of armature and field windings
b. For a completely assembled generator with a brushless exciter,[1] check exciter field current at no load with normal voltage and frequency on the generator. (For a partially assembled generator, test for polarity of field coils)
c. High-potential test in accordance with 16.51

16.51 HIGH-POTENTIAL TESTS

16.51.1 Safety Precautions and Test Procedures

See 3.01.

16.51.2 Test Voltage—Armature Windings

The test voltage for all generators (with the exception of those described in 16.51.6) shall be an alternating voltage whose effective value is 1000 volts plus twice the rated voltage of the machine.

16.51.3 Test Voltage—Field Windings, Generators with Slip Rings

The test voltage for all generators with slip rings (with the exception of those described in 16.51.6) shall be an alternating voltage whose effective value is 10 times the rated excitation voltage but in no case less than 1500 volts.

16.51.4 Test Voltage—Assembled Brushless Generator Field Winding and Exciter Armature Winding

The test voltage for all assembled brushless generator field windings and exciter armature windings (with the exception of those described in 16.51.6) shall be an alternating voltage whose effective value is as follows.

a. Rated excitation voltage ≤ 350 volts dc; ten times the rated excitation voltage but in no case less than 500 volts
b. Rated excitation voltage > 350 volts dc; 2800 volts plus twice the rated excitation voltage

The brushless circuit component (diodes, thyristors, etc.) on an assembled brushless exciter and synchronous machine field winding shall be short-circuited (not grounded) during test.

16.51.5 Test Voltage—Brushless Exciter Field Winding

The test voltage for all brushless exciter field windings (with the exception of those described in 16.51.6) shall be an alternating voltage whose effective value is as follows.

a. Rated excitation voltage ≤ 350 volts dc; 10 times the rated excitation voltage but in no case less than 1500 volts
b. Rated excitation voltage > 350 volts dc; 2800 volts plus twice the rated excitation voltage
c. Exciters with ac-excited stators (fields) shall be tested at 1000 volts plus twice the ac-rated voltage of the stator.

16.51.6 Exceptions to Test Voltages Given in 16.51.2 through 16.51.5

For generators whose armature or field windings are for connection to circuits of 35 volts or less, the test voltage for such a winding shall be an alternating voltage whose effective value is 500 volts.

16.52 DYNAMIC BALANCE OF MACHINES ▲

See MG 1, Part 7.

[1] If brushless exciter is not provided, check generator field current at no load with normal voltage and frequency on the generator.

Copyright National Electrical Manufacturers Association
Provided by IHS under license with NEMA
No reproduction or networking permitted without license from IHS
Not for Resale

MANUFACTURING

16.61 NAMEPLATE MARKING

The following minimum amount of information shall be given on nameplates. For abbreviations, see 1.80.

a. Manufacturer's name, serial number, or other suitable identification
b. Kilovolt-ampere output
c. Kilowatt output
d. Power factor
e. Rating (prime or standby)
f. Maximum ambient temperature for which the generator is designed (see 16.40, Note 2)[1]
g. Insulation system designation (If armature and field use different classes of insulation systems, both insulation systems shall be given, that for the armature being given first.)
h. Rated speed in rpm
i. Voltage
j. Rated current in amperes per terminal
k. Number of phases
l. Frequency
m. Rated exciter field current and exciter field voltage or generator field current and generator field voltage if exciter is not provided

16.62 TOLERANCES LIMITS IN DIMENSIONS

The dimensions from the shaft center to the bottom of the feet shall be not greater than the nominal dimensions shown on the manufacturer's dimensional sheet.

When the generator is coupled or geared to the driven machine, shims are usually required to secure accurate alignment.

APPLICATION DATA

16.80 PARALLEL OPERATION

Many of the factors which affect the parallel operation of generators are contained in the prime mover, and the characteristics of the equipment connected to the system with which the generator is to operate in parallel also impose conditions which should be taken into account in parallel operation.

When requested, the generator manufacturer should furnish the following, and any other information as may be required, in determining the system requirements for succesful parallel operation:

a. Synchronizing torque coefficient P_r. Unless otherwise specified the value of P_r should correspond to a pulsation frequency of one-half the rpm (see 21.87).
b. Wk^2 of the generator rotor

16.81 CALCULATION OF NATURAL FREQUENCY

See 21.87.

16.82 TORSIONAL VIBRATION

Excessive torsional vibration may result in overstressed shafts, couplings, and other rotating parts. Torsional vibration is difficult to determine and measure, and it is recommended that torsional stresses be investigated when generators are to be driven by prime movers producing periodic torque pulsations.

While the factors which affect torsional vibration are primarily contained in the design of the prime mover, the design of the generator rotor should also be considered. When requested, the generator manufacturer should furnish the Wk^2 and weight of the generator rotor and any other information, such as the stiffness of the spider, as may be required to make a successful design of the combined unit.

16.83 SERVICE CONDITIONS

16.83.1 General

Generators should be properly selected with respect to their service conditions, usual or unusual, both of which involve the environmental conditions to which the machine is subjected and the operating conditions. Machines conforming to this Part 16 are designed for operation in accordance with their ratings under usual service conditions. Some machines may also be capable of operating in accordance with their ratings under unusual service conditions.

Definite-purpose or special-purpose machines may be required for some unusual conditions.

Service conditions, other than those specified as usual, may involve some degree of hazard. The additional hazard depends upon the degree of the severity of the environment to which the machine is exposed.

The additional hazard results from such things as overheating, mechanical failure, abnormal deterioration of the insulation system, corrosion, fire, and explosion.

Although experience of the user may often be the best guide, the manufacturer of the driving equipment and the

[1] As an alternative, the temperature rise by resistance as shown in 16.40 shall be given.

Copyright National Electrical Manufacturers Association
Provided by IHS under license with NEMA
No reproduction or networking permitted without license from IHS

Not for Resale

generator manufacturer should be consulted for further information regarding any unusual service conditions which increase the mechanical or thermal duty on the machine and as a result, increase the chances for failure and consequent hazard. This further information should be considered by the user, consultants, or others most familiar with the details of the application involved when making the final decision.

16.83.2 Usual Service Conditions

Conditions anticipated for normal use include:

a. An ambient temperature not less than 0°C nor more than 40°C
b. An altitude not exceeding 3300 feet (1000 meters)
c. A location or supplementary enclosure, if any, such that there is not serious interference with the ventilation of the generator
d. Installation on a rigid mounting surface
e. A vibration limit not exceeding 0.005 inch in any plane on a generator when driven by the prime mover over the operating range

16.83.3 Unusual Service Conditions

The manufacturer should be consulted if any unusual service conditions exist which may affect the construction or operation of the generator. Among such conditions are:

a. Exposure to:
   1. Combustible, explosive, abrasive, or conducting dusts
   2. Lint or very dirty operating conditions where the accumulation of dirt will interfere with normal ventilation
   3. Chemical fumes, or flammable or explosive gases
   4. Nuclear radiation
   5. Steam, salt-laden air, or oil vapor
   6. Damp or very dry locations, radiant heat, vermin infestation, or atmospheres conducive to the growth of fungus
   7. Abnormal shock or vibration from external sources
   8. Abnormal axial or side thrust imposed on the generator shaft
b. Operation where:
   1. There is excessive departure from rated voltage (see 16.47)
   2. Low noise levels are required
   3. Generator neutral will be solidly grounded (see 16.84)
c. Operation at speeds other than rated speed
d. Operation in a poorly ventilated room, in a pit, or in an inclined position exceeding 10 degrees from horizontal
e. Operation where subjected to:
   1. Torsional vibration (see 16.82)
   2. Out-of-phase paralleling
   3. Unbalanced load

16.84 NEUTRAL GROUNDING

For safety of personnel and to reduce over-voltages to ground, the generator neutral is often either grounded solidly or grounded through a resistor or reactor. When the neutral is grounded through a resistor or reactor properly selected in accordance with established power system practices, there are no special considerations required in the generator design or selection, unless the generator is to be operated in parallel with other power supplies. The neutral of a generator should not be solidly grounded unless the generator has been specifically designed for such operation. With the neutral solidly grounded, the maximum line-to-ground fault current may be excessive (see 16.45), and in parallel systems excessive circulating harmonic currents may be present in the neutrals.

16.85 STAND-BY GENERATOR

Synchronous generators may at times be assigned a stand-by rating where the application is an emergency back-up power source and is not the prime power supply. Under such conditions, temperature rises up to 25°C above those for continuous-duty operation may occur in accordance with Note 3 of 16.40. Operation at these stand-by temperature rise values causes the generator insulation to age thermally at about four to eight times the rate that occurs at the continuous-duty temperature rise values, i.e., operating 1 hour at stand-by temperature rise values is approximately equivalent to operating 4 to 8 hours at continuous-duty temperature rise values.

16.86 MACHINE SOUND (SYNCHRONOUS GENERATORS)

16.85.1 Sound Quality

Sound quality, the distribution of effective sound intensities as a function of frequency, affects the objectionability of the sound.

A measurement of total sound does not completely define sound acceptability because machines with the same overall decibel sound level may have a different sound quality. It may be necessary, in some cases, to describe sound profile in more detail, including octave band values.

Copyright National Electrical Manufacturers Association
Provided by IHS under license with NEMA
No reproduction or networking permitted without license from IHS
Not for Resale

16.86.2 Sound Measurement

Machine sound should be measured in accordance with IEEE *Std* 85 in overall sound power levels using the A-weighting network and stated in decibels (reference = 10^{-12} watts).

Generator sound tests should be taken at rated voltage no load. The generator should be isolated from other sound sources.

Sound power values are related to the sound source and are not affected by environmental conditions. They are calculated from test data taken under prescribed conditions and the values can be repeated. Field measurements are measured in sound pressure. Measurements of sound pressure levels of generators installed in the field can be correlated to sound power levels using corrections to environmental conditions as outlined in NEMA Standards Publication No. MG 3.

Copyright National Electrical Manufacturers Association
Provided by IHS under license with NEMA
No reproduction or networking permitted without license from IHS

Not for Resale

Section II
SMALL (FRACTIONAL) AND MEDIUM (INTEGRAL) MACHINES
Part 18
DEFINITE-PURPOSE MACHINES

18.0 SCOPE

The standards in this Part 18 of Section II cover the following machines.

a. Alternating-Current Machines

Alternating-current machines up to and including the ratings built in frames corresponding to the continuous open-type ratings given in the table.

b. Direct-Current Machines

Direct-current motors, generators and motor-generator sets (direct-current output) built in frames with continuous dripproof ratings, or equivalent capacities, up to and including:

motors: 1.25 horsepower per rpm, open type
generators: 1.0 kilowatt per rpm, open type

Synchronous Speed, Rpm	Motors Squirrel-Cage and Wound Rotor, Hp	Motors, Synchronous Hp		Generators Synchronous, Revolving Field Type, kW at 0.8 Power Factor
		Power Factor		
		Unity	0.8	
3600	500	200	150	...
1800	500	200	150	150
1200	350	200	150	150
900	250	150	125	100
720	200	125	100	100
600	150	100	75	75
514	125	75	60	60

PERMANENT-SPLIT CAPACITOR INDUSTRIAL INSTRUMENT MOTORS AND GEAR MOTORS

(Type 2-11)

(A permanent-split capacitor industrial instrument motor or gear motor is a small motor or gear motor intended for application in such instruments as recorders and timing devices.)

18.001 CLASSIFICATION ACCORDING TO ELECTRICAL TYPE

These motors and gear motors are distributed-wound permanent-split capacitor motors of the following types.

a. Synchronous capacitor
b. Nonsynchronous capacitor—normal slip
c. Nonsynchronous capacitor—high slip

RATINGS

18.002 VOLTAGE RATING

The voltage rating shall be 110 volts, 50 hertz; 115 volts, 60 hertz.

18.003 FREQUENCIES

Frequencies shall be 50 and 60 hertz.

18.004 SPEED AND TORQUE RATINGS

18.004.1 Motors

See Tables 18-1, 18-2, and 18-3.

Table 18-1
SYNCHRONOUS CAPACITOR MOTORS

AG Max Inches	Frequency, Hertz	Synchronous Rpm	Torque, Oz-in.	
			Full-Load and Pull-In*	Locked Rotor
1.75	60	1800	0.25	0.25
2.00	60	1800	0.35	0.35
2.50	60	1800	0.60	0.60
1.75	50	1500	0.27	0.27
2.00	50	1500	0.38	0.38
2.50	50	1500	0.66	0.66

*See 18.006.

Copyright National Electrical Manufacturers Association
Provided by IHS under license with NEMA
No reproduction or networking permitted without license from IHS
Not for Resale

Table 18-2
NONSYNCHRONOUS CAPACITOR MOTORS—NORMAL SLIP

AG Max Inches	Frequency, Hertz	Synchronous Rpm	Full-Load Rpm	Torque, Oz-in.		
				Full-Load	Breakdown	Locked Rotor
1.75	60	1800	1550	1.0	1.7	1.0
2.00	60	1800	1550	1.4	2.4	1.4
2.50	60	1800	1550	2.4	3.7	2.4
1.75	50	1500	1250	1.1	1.8	1.1
2.00	50	1500	1250	1.6	2.6	1.6
2.50	50	1500	1250	2.7	3.7	2.7

Table 18-3
NONSYNCHRONOUS CAPACITOR MOTORS—HIGH SLIP

AG Max Inches	Frequency, Hertz	Synchronous Rpm	Full-Load Rpm	Torque, Oz-in.		
				Full-Load	Breakdown	Locked Rotor
1.75	60	1800	1200	0.75	1.5	1.5
2.00	60	1800	1200	1.10	2.2	2.2
2.50	60	1800	1200	1.80	3.7	3.7
1.75	50	1500	1000	0.82	1.6	1.6
2.00	50	1500	1000	1.20	2.4	2.4
2.50	50	1500	1000	2.00	4.0	4.0

18.004.2 Gear Motors

See Tables 18-4, 18-5, and 18-6.

Table 18-4
SYNCHRONOUS CAPACITOR GEAR MOTORS—4-POLE

AG Max Inches	Output Speed, Rpm	Ratios		Minimum Full-Load and Pull-In* Torques, Oz-in.
		60 Hertz	50 Hertz	
3.44	300	6:1	5:1	2.5
3.44	100	18:1	15:1	8.0
2.94	60	30:1	25:1	7.5
2.94	30	60:1	50:1	12
2.94	15	120:1	100:1	25
2.94	10	180:1	150:1	38
2.94	6.0	300:1	250:1	64
2.69	3.0	600:1	500:1	80
2.69	2.0	900:1	750:1	90
2.69	1.0	1800:1	1500:1	100

*See 18.006.

Table 18-5
NONSYNCHRONOUS CAPACITOR GEAR MOTORS—4-POLE—NORMAL SLIP

AG Max Inches	Output Speed, Rpm*	Ratios		Minimum Output Torque, Oz-in.
		60 Hertz	50 Hertz	
3.44	...	6:1	5:1	10
3.44	...	18:1	15:1	18
2.94	...	30:1	25:1	27
2.94	...	60:1	50:1	48
2.94	...	120:1	100:1	73
2.94	...	180:1	150:1	75
2.94	...	300:1	250:1	75
2.69	...	600:1	500:1	80
2.69	...	900:1	750:1	90
2.69	...	1800:1	1500:1	100

*Since the output speeds are a function of the number of stages of gearing and gear efficiencies, they are not specified.

Copyright National Electrical Manufacturers Association
Provided by IHS under license with NEMA
No reproduction or networking permitted without license from IHS
Not for Resale

Table 18-6
NONSYNCHRONOUS CAPACITOR GEAR MOTORS—4-POLE—HIGH SLIP

AG Max Inches	Output Speed, Rpm*	Ratios		Minimum Output Torque, Oz-in.
		60 Hertz	50 Hertz	
3.44	...	6:1	5:1	8.2
3.44	...	18:1	15:1	14
2.94	...	30:1	25:1	24
2.94	...	60:1	50:1	37
2.94	...	120:1	100:1	75
2.94	...	180:1	150:1	75
2.94	...	300:1	250:1	75
2.69	...	600:1	500:1	80
2.69	...	900:1	750:1	90
2.69	...	1800:1	1500:1	100

*Since the output speeds are a function of the number of stages of gearing and gear efficiencies, they are not specified.

TEST AND PERFORMANCE

18.005 TEMPERATURE RISE

The permanent-split capacitor industrial instrument motor or gear motor shall have a Class A insulation system. The temperature rise above the temperature of the cooling medium for each of the various parts of the motor or gear motor, when tested in accordance with the rating, shall not exceed the following values.

Coil Windings, Degrees C	
resistance or thermocouple	65

NOTES

1—All temperatures are based on a maximum ambient temperature of 40°C. Abnormal deterioration of insulation may be expected if this ambient temperature is exceeded in regular operation.

2—The temperature rises given in the foregoing paragraph are based on the motor being mounted so as not to conduct heat to a secondary mounting. If a mounting is provided which acts as a heat sink, the temperature rise can be considerably reduced.

18.006 RATED PULL-IN TORQUE

The rated pull-in torque of a synchronous industrial instrument motor or gear motor shall be the maximum constant torque under which the motor will pull its connected friction load, having substantially zero load inertia, into synchronism when rated frequency and voltage are applied, subject to the voltage and frequency variations given in 12.44.

18.007 VARIATIONS FROM RATED VOLTAGE AND RATED FREQUENCY

See 12.44.

18.008 VARIATION FROM RATED SPEED—NONSYNCHRONOUS MOTORS

The variation from rated speed of nonsynchronous motors shall not exceed 20 percent when measured at rated load with rated voltage and frequency applied and with the motor temperature approximately 25°C.

18.009 HIGH-POTENTIAL TEST

See 3.01 and 12.03.

Copyright National Electrical Manufacturers Association
Provided by IHS under license with NEMA
No reproduction or networking permitted without license from IHS
Not for Resale

MANUFACTURING

18.012 DIRECTION OF ROTATION AND TERMINAL MARKINGS

The direction of rotation shown in the following terminal diagrams is referenced viewing the shaft end (end opposite terminal leads) on both motors and gear motors.

18.012.1 Three Terminal Leads

See Figure 18-1.

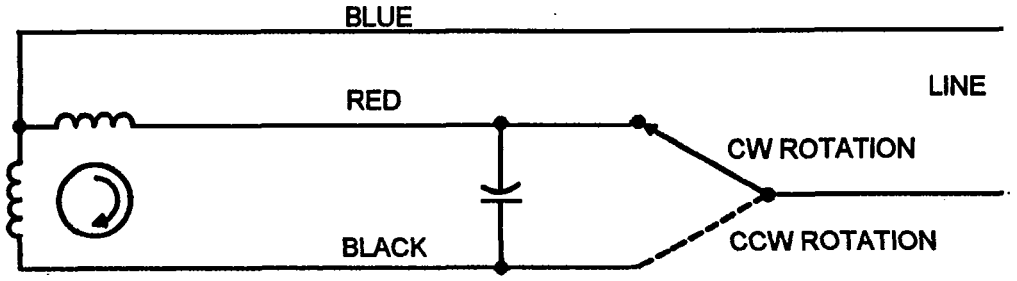

Figure 18-1
THREE TERMINAL LEADS

18.012.2 Four Terminal Leads

See Figure 18-2.

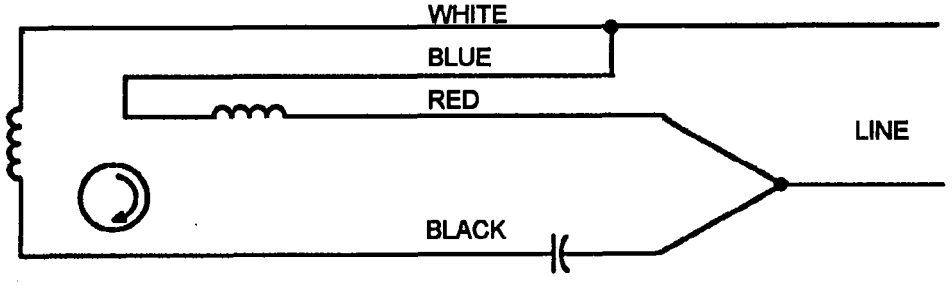

For CCW rotation, interchange leads of either phase.

Figure 18-2
FOUR TERMINAL LEADS

18.012.3 Five Terminal Leads Connected for Single-Phase Servo Operation (Center Tap)

See Figure 18-3.

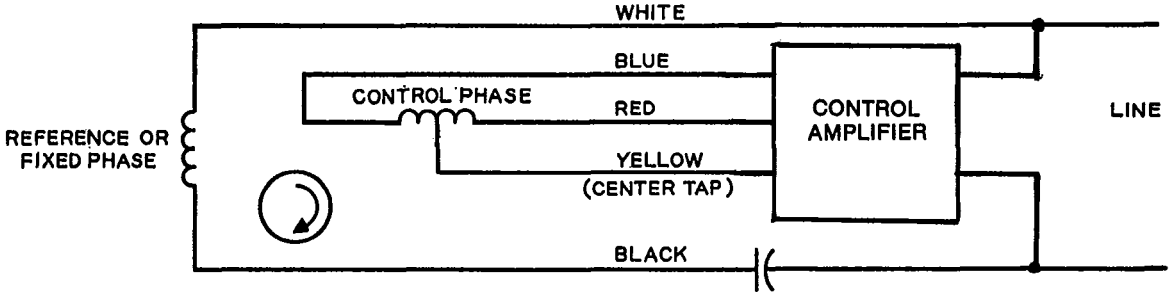

For CCW rotation, interchange leads of either phase.

Figure 18-3
FIVE TERMINAL LEADS

Copyright National Electrical Manufacturers Association
Provided by IHS under license with NEMA
No reproduction or networking permitted without license from IHS

Not for Resale

18.013 GENERAL MECHANICAL FEATURES

18.013.1 Motors

Permanent-split capacitor industrial instrument motors shall be constructed with the following mechanical features.

a. Totally enclosed
b. Ball bearing
c. Operation in any position
d. Mounting shall be face type by two No. 8-32 tapped holes, 180 degrees apart, located as shown in Figure 18-4. Shaft extension and mounting dimensions shall be in accordance with Figure 18-4.

18.013.2 Gear Motors

Permanent-split capacitor industrial instrument gear motors shall be constructed with the following mechanical features.

a. Totally enclosed
b. Ball bearing-rotor shaft
c. Sleeve bearing-gear shafts
d. Operation only in horizontal position
e. Mounting shall be face type by two No. 8-32 extended studs located as shown in Figure 18-5. Shaft extension and mounting dimensions shall be in accordance with Figure 18-5.

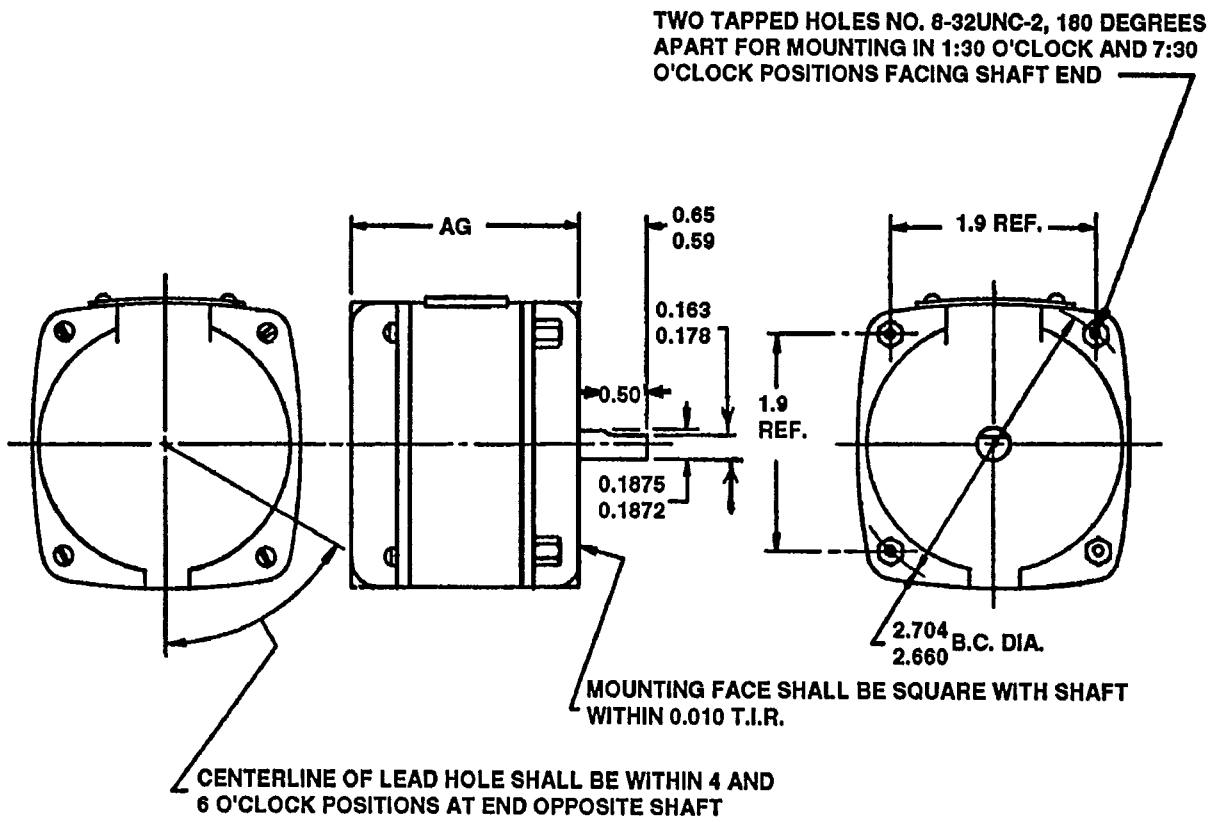

All Dimensions in inches.

Figure 18-4
DIMENSIONS FOR PERMANENT-SPLIT CAPACITOR INDUSTRIAL INSTRUMENT MOTORS (TYPE 2-11)

Copyright National Electrical Manufacturers Association
Provided by IHS under license with NEMA
No reproduction or networking permitted without license from IHS

Not for Resale

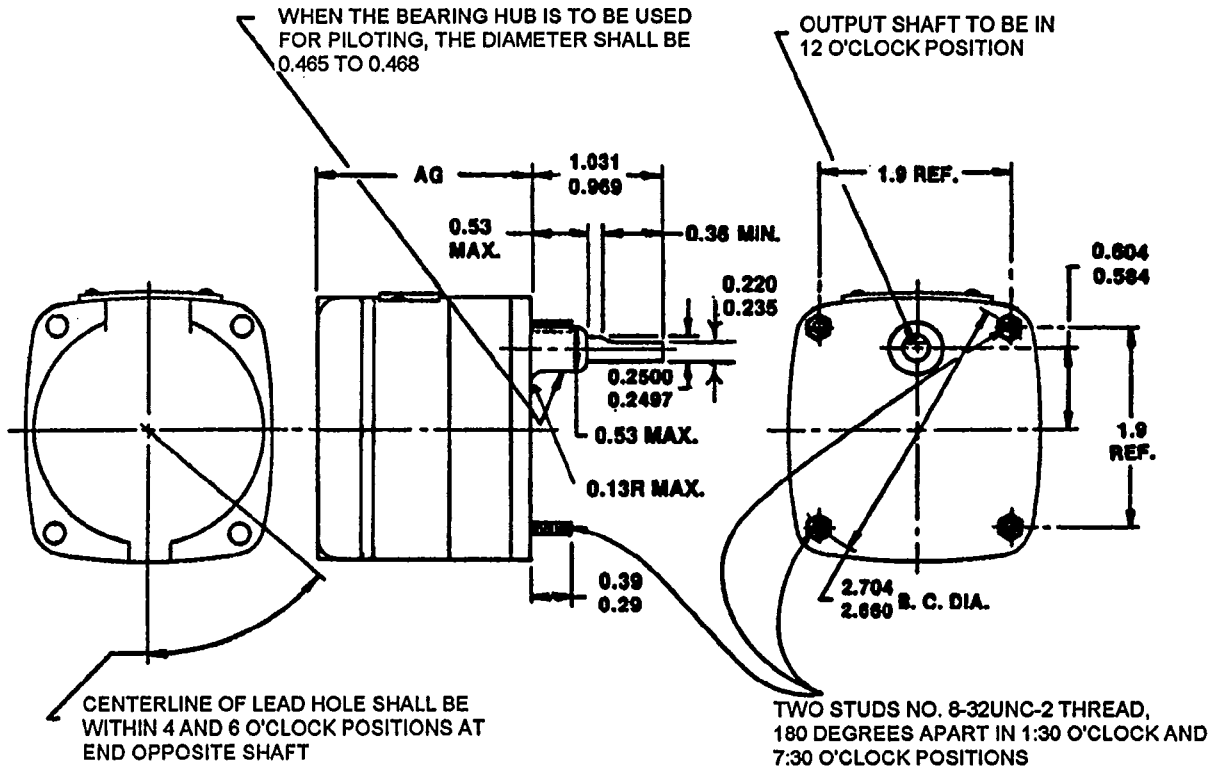

All Dimensions in inches.

Figure 18-5
DIMENSIONS FOR PERMANENT-SPLIT CAPACITOR INDUSTRIAL INSTRUMENT GEAR MOTORS (TYPE 2-11)

Copyright National Electrical Manufacturers Association
Provided by IHS under license with NEMA
No reproduction or networking permitted without license from IHS
Not for Resale

LOW-INERTIA SERVO INDUSTRIAL INSTRUMENT MOTORS AND GEAR MOTORS
(Type 2-11)

(A low-inertia servo industrial instrument motor or gear motor is a small motor or gear motor intended for applications in such instruments as self-balancing recorders and remote positioning devices.)

18.026 CLASSIFICATION ACCORDING TO ELECTRICAL TYPE

a. Permanent-split capacitor
b. Two phase

RATINGS

18.027 VOLTAGE RATINGS AND CONTROL PHASE IMPEDANCES

18.027.1 Fixed Phase

a. 110 volts, 50 hertz
b. 115 volts, 60 hertz

18.027.2 Control Phase

Frequency, Hertz	Locked-Rotor Control Phase Impedance, Ohms	Rated Control Phase Voltage, Volts	Minimum Control Phase Voltage to Start (Breakaway) Volts
60	500–6000	165	16.5
	2500–3000	115	11.5
	40–48	15	1.5
50	4500–5500	165	16.5
	2000–2500	110	11.0
	33–40	15	1.5

18.028 FREQUENCIES

Frequencies shall be 50 and 60 hertz.

18.029 SPEED AND TORQUE RATINGS AND ROTOR INERTIA

18.029.1 Motors

Frequency, Hertz	Speed, Rpm		
	Synchronous	No Load	Full Load
60	1800	1500	1200
50	1500	1250	1000

AG Max. Inches	Frequency, Hertz	Torque Oz-In. Full Load	Torque Oz-In. Locked-Rotor and Breakdown	Maximum Rotor Inertia, Oz-in. sec^2
2.02	60	0.9	2.0	0.00025
	50	1.0	2.2	0.00025
2.19	60	1.1	2.8	0.00035
	50	1.2	3.0	0.00035

18.029.2 Gear Motors

AG Max. Inches	Ratios 60 Hertz	Ratios 50 Hertz	Minimum Output Torque, Oz-in.
2.87	6:1	5:1	4.9
2.87	18:1	15:1	14
2.87	30:1	25:1	24
3.03	60:1	50:1	37
3.03	120:1	100:1	75
3.03	180:1	150:1	75
2.67	300:1	250:1	75
2.67	600:1	500:1	80
2.67	900:1	750:1	90
2.67	1800:1	1500:1	100

Since output speeds are a function of the number of stages of gearing and gear efficiencies, they are not specified.

Copyright National Electrical Manufacturers Association
Provided by IHS under license with NEMA
No reproduction or networking permitted without license from IHS
Not for Resale

TESTS AND PERFORMANCE

18.030 TEMPERATURE RISE

The low-inertial servo industrial motor or gear motor shall have a Class A insulation system.[1] The temperature rise above the temperature of the cooling medium for each of the various parts of the motor or gear motor, when tested in accordance with the rating, shall not exceed the following values.

Coil Windings, Degrees C	
resistance or thermocouple	65

NOTES

1—All temperatures are based on a maximum ambient temperature of 40°C. Abnormal deterioration of insulation may be expected if this ambient temperature is exceeded in regular operation.

2—The temperature rises given in the foregoing paragraph are based on the motor being mounted so as not to conduct heat to a secondary mounting. If a mounting is provided which acts as a heat sink, the temperature rise can be considerably reduced.

18.031 CONTROL VOLTAGE TO START

All low-inertia servo industrial instrument motors and gear motors shall start without load when rated voltage is applied to the fixed phase and the control-phase voltage to start, as given in 18.027, is applied to the control phase. The control-phase voltage shall be applied gradually, starting from zero.

18.032 VARIATION FROM FIXED-PHASE RATED VOLTAGE

Low-inertia servo industrial instrument motors and gear motors shall operate successfully at rated load and rated frequency with a variation in the fixed-phase voltage up to plus or minus 10 percent of the rated fixed-phase voltage. Performance within this voltage variation will not necessarily be in accordance with the standards established for operation at rated fixed-phase voltage.

18.033 VARIATION FROM RATED FREQUENCY

Low-inertia servo industrial instrument motors and gear motors shall operate successfully at rated load and at rated fixed-phase voltage with a variation in the frequency up to 5 percent above or below the rated frequency. Performance within this frequency variation will not necessarily be in accordance with the standards established for operation at rated frequency.

18.034 COMBINED VARIATION OF VOLTAGE AND FREQUENCY

Low-inertia servo industrial instrument motors and gear motors shall operate successfully at rated load with a combined variation in the fixed-phase voltage and the frequency up to 10 percent above or below the rated fixed-phase voltage and the rated frequency, provided that the frequency variation does not exceed 5 percent. Performance within this combined variation will not necessarily be in accordance with the standards established for operation at rated fixed-phase voltage and rated frequency.

18.035 VARIATION FROM RATED SPEED

The variation from the rated speed shall not exceed 20 percent when measured at rated fixed-phase voltage, frequency, and load and at an ambient temperature of 25°C.

18.036 HIGH-POTENTIAL TEST

See 3.01 and 12.03.

MANUFACTURING

18.037 DIRECTION OF ROTATION AND TERMINAL MARKINGS

The direction of rotation shown in the following terminal diagrams is referenced viewing the shaft end (end opposite terminal leads) on both motors and gear motors.

18.037.1 Four Terminal Leads Connected for Single-Phase Servo Operation

See Figure 18-6.

18.037.2 Four Terminal Leads, Two-Phase Servo Connection

See Figure 18-7.

18.037.3 Five Terminal Leads Connected for Single-Phase Servo Operation (Center Tap)

See Figure 18-8.

18.038 GENERAL MECHANICAL FEATURES

18.038.1 Motors

Low-inertia servo industrial instrument motors shall be constructed with the following mechanical features.

a. Totally enclosed
b. Ball bearing

[1] See 1.66 for description of classes of insulation.

Copyright National Electrical Manufacturers Association
Provided by IHS under license with NEMA
No reproduction or networking permitted without license from IHS
Not for Resale

c. Operation in any position
d. Mounting shall be face type by two No. 8-32 tapped holes 180 degrees apart. Shaft extension and mounting dimensions shall be in accordance with Figure 18-9.

18.038.2 Gear Motors

Low-inertia servo industrial instrument gear motors shall be constructed with the following mechanical features.

a. Totally enclosed
b. Ball bearing—rotor shafts
c. Sleeve bearing—gear shafts
d. Operation only in horizontal position
e. Mounting shall be face type by two No. 8-32 studs located as shown in Figure 18-2. Shaft extension and mounting dimensions shall be in accordance with Figure 18-10.

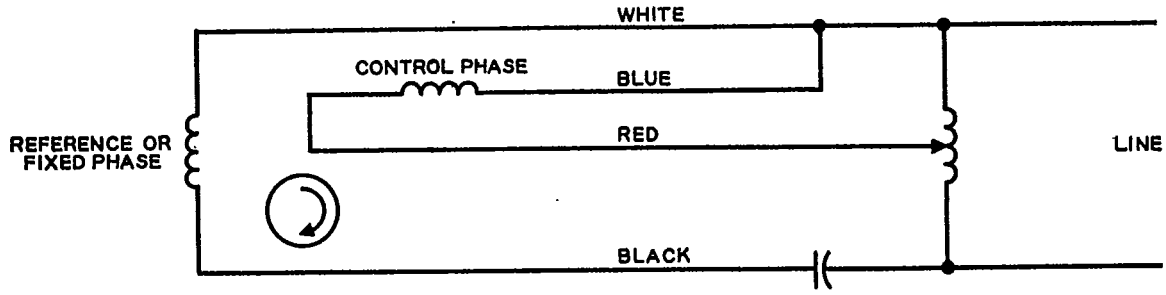

For CCW rotation, interchange leads of either phase.

Figure 18-6
FOUR TERMINAL LEADS CONNECTED FOR SINGLE-PHASE SERVO OPERATION

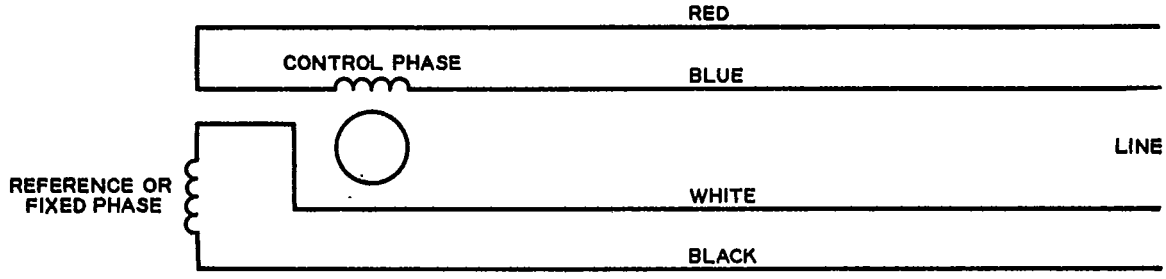

When connected witth a capcitor in accordance with Figure 18-6 the direction of rotation shall be as shown in Figure 18-6

Figure 18-7
FOUR TERMINAL LEADS, TWO-PHASE SERVO CONNECTION

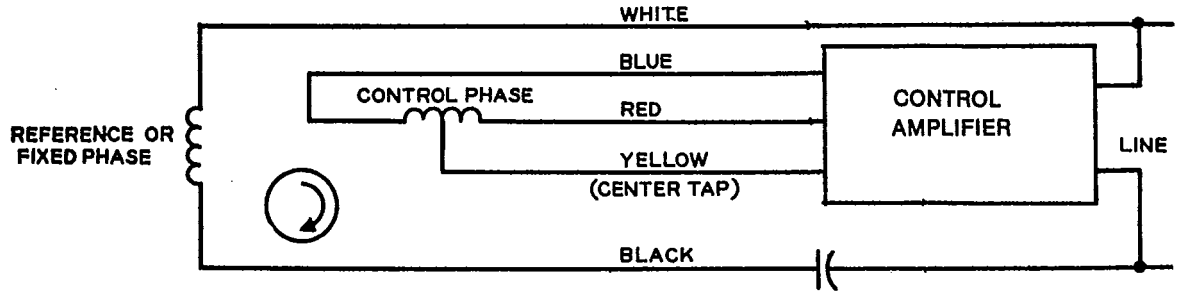

For CCW rotation, interchange leads of either phase.

Figure 18-8
FIVE TERMINAL LEADS CONNECTED FOR SINGLE-PHASE SERVO OPERATION

Copyright National Electrical Manufacturers Association
Provided by IHS under license with NEMA
No reproduction or networking permitted without license from IHS
Not for Resale

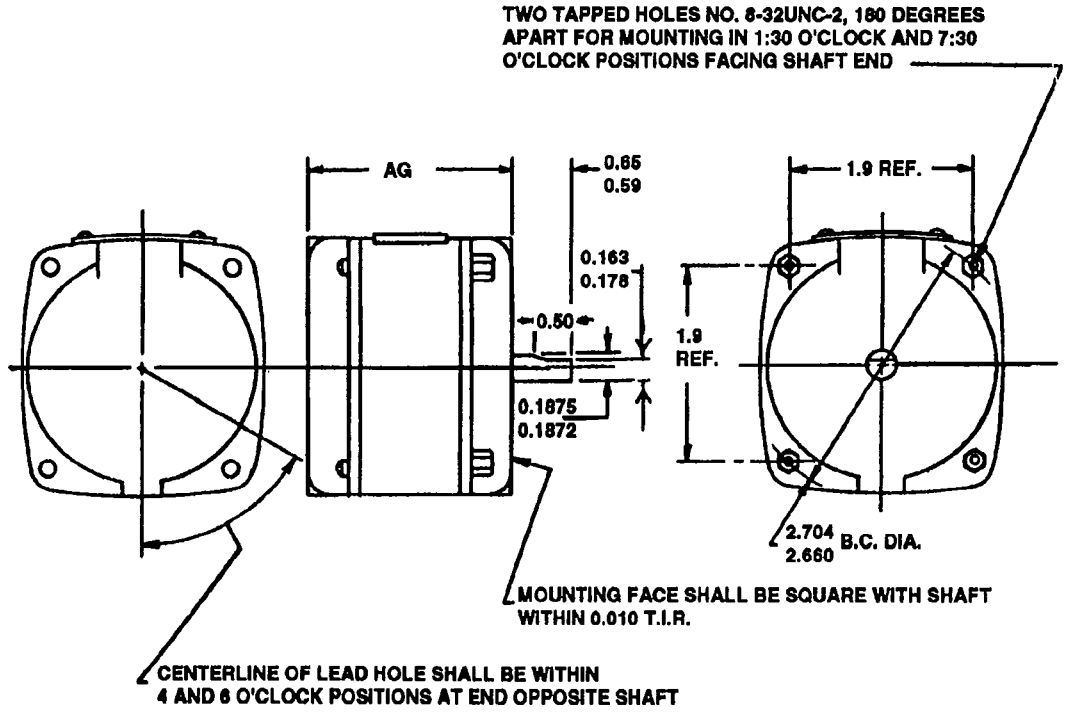

Figure 18-9
DIMENSIONS FOR LOW-INERTIA SERVO INDUSTRIAL INSTRUMENT MOTORS

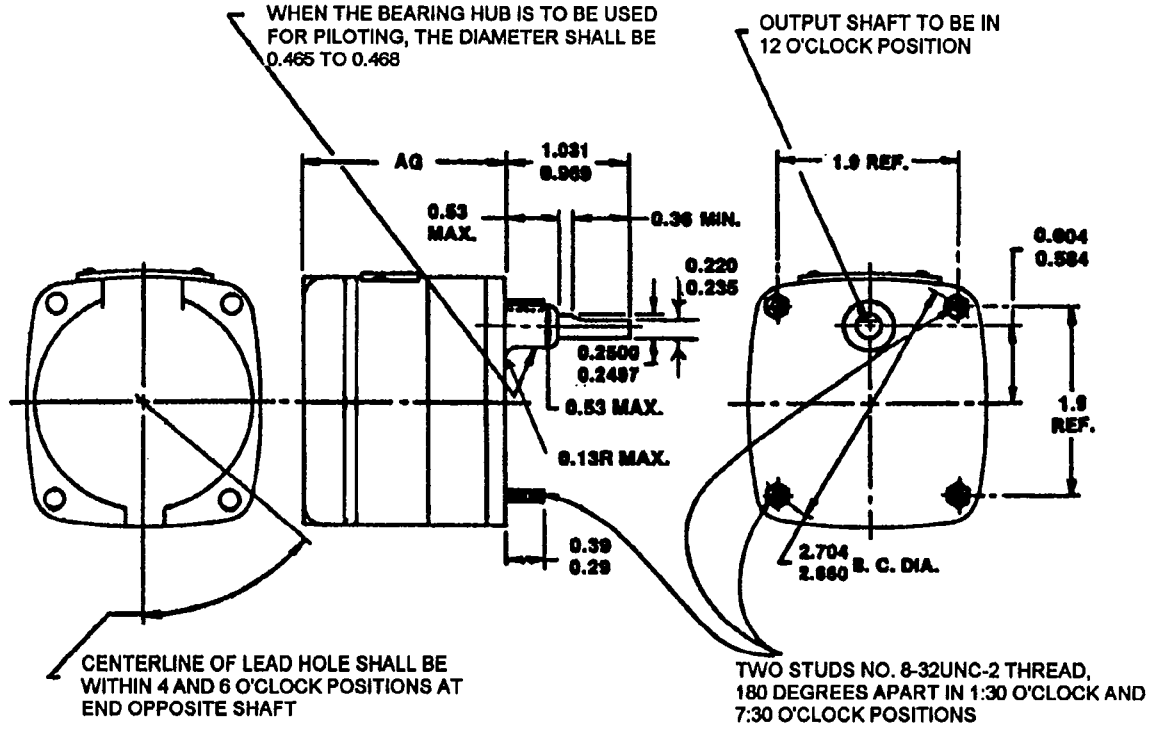

Figure 18-10
DIMENSIONS FOR LOW-INERTIA SERVO INDUSTRIAL INSTRUMENT GEAR MOTORS

Copyright National Electrical Manufacturers Association
Provided by IHS under license with NEMA
No reproduction or networking permitted without license from IHS
Not for Resale

UNIVERSAL MOTOR PARTS

(A set of universal motor parts consists of stator (field) and rotor (armature) without brushholder mechanism, end shields, bearings, or conventional frame.)

18.051 CLASSIFICATION ACCORDING TO ELECTRICAL TYPE

Motor windings are (a) salient-pole type or (b) distributed type.

RATINGS

18.052 VOLTAGE RATINGS

Voltages shall be 115 and 230 volts, direct and alternating current.

18.053 FREQUENCIES

The frequency shall be 60 hertz/direct current.

NOTE—Universal motors will operate successfully on all frequencies below 60 hertz and on direct current.

18.054 SPEED

At speeds less than 5000 rpm, there will be a marked difference in performance characteristics between operation on alternating current and operation on direct current. At speeds greater than 5000 rpm, there may be a difference in performance on alternating current as compared to direct current if a design is intended to favor some characteristic, such as brush life, on the predominantly used frequency.

TESTS AND PERFORMANCE

18.055 HIGH-POTENTIAL TEST

See 3.01 and 12.03.

18.056 VARIATION FROM RATED VOLTAGE

See 12.44.

18.057 TEMPERATURE RISE

The temperature rise of a motor built from universal motor parts depends upon the design of the cooling system, as well as upon the motor losses. Motor parts shall have losses and operating characteristics approximately the same as those of complete motors of similar ratings.

NOTE—The driven-device manufacturer has control of the temperature rise of the motor built from the parts, and the motor manufacturer should be consulted on this phase of the application of the motor parts.

Copyright National Electrical Manufacturers Association
Provided by IHS under license with NEMA
No reproduction or networking permitted without license from IHS
Not for Resale

MANUFACTURING

18.058 MOUNTING DIMENSIONS FOR UNIVERSAL MOTOR STATORS

See Figure 18-11.

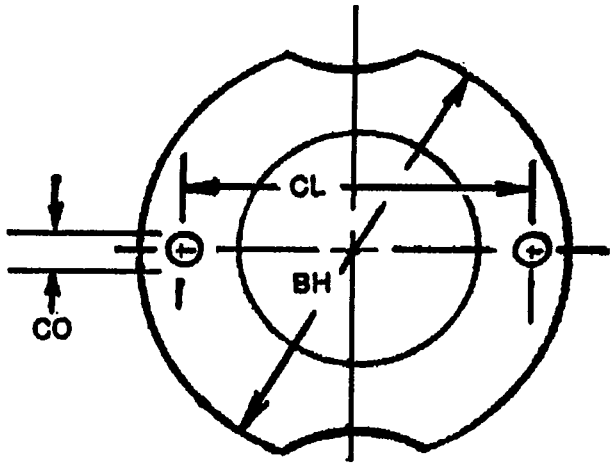

BH* (+0.000) (-0.002)	CL*	CO* (to fit)
2.125	1.83	#6 Screw
2.437	2.12	#8 Screw
2.625	2.22	#8 Screw
2.875	2.44	#8 Screw
3.187	2.75	#10 Screw
3.687	3.25	#10 Screw
4.375	4.12	#10 Screw

All dimensions in inches.
*See 4.01 for meaning of letter dimensions.

Figure 18-11
MOUNTING DIMENSIONS

18.059 TOLERANCES ON SHAFT EXTENSION DIAMETERS AND KEYSEATS

See 4.05.

18.060 DIRECTION OF ROTATION

The specified direction of rotation is that noted when facing the end of the machine opposite the drive.

18.061 ARMATURE INTERNAL CONNECTIONS

Parts sets which are intended for reversible motors should have armatures with neutral internal connections. For nonreversible motors, the armature should be constructed to have the commutator leads shifted to give the best brush life and commutation.

Armature internal connections are normally based on the motor's brush mechanism being located midway between the poles of the stator.

Copyright National Electrical Manufacturers Association
Provided by IHS under license with NEMA
No reproduction or networking permitted without license from IHS
Not for Resale

MOTORS FOR HERMETIC REFRIGERATION COMPRESSORS

(A hermetic motor consists of a stator and rotor without shaft, end shields or bearings for installation in refrigeration compressors of the hermetically sealed type.)

18.076 CLASSIFIED ACCORDING TO ELECTRICAL TYPE

a. Single phase
   1. Split phase
   2. Capacitor start
   3. Two-value capacitor
   4. Permanent-split capacitor

b. Polyphase induction: Squirrel cage, constant speed

RATINGS

18.077 VOLTAGE RATINGS

18.077.1 Single-Phase Motors

The voltage ratings of single phase motors shall be:

a. 60 hertz—115, 200, and 230 volts
b. 50 hertz—110 and 220 volts

18.077.2 Polyphase Induction Motors

The voltage ratings for polyphase motors shall be:

a. 60 hertz—200, 230, 460, and 575 volts
b. 50 hertz—220 and 380 volts

18.078 FREQUENCIES

Frequencies shall be 50 and 60 hertz.

18.079 SPEED RATINGS

Synchronous speed ratings shall be 1800 rpm and 3600 rpm for 60-hertz hermetic motors and 1500 rpm and 3000 rpm for 50-hertz hermetic motors.

TESTS AND PERFORMANCE

18.080 OPERATING TEMPERATURE

The operating temperature of a hermetic motor depends on the design of the cooling system as well as the motor losses. Therefore, the driven-device manufacturer has control of the operating temperature of the hermetic motor, and the motor manufacturer should be consulted on this phase of the application.

18.081 BREAKDOWN TORQUE AND LOCKED-ROTOR CURRENT OF 60-HERTZ HERMETIC MOTORS

18.081.1 Breakdown Torque

The breakdown torques of 60-hertz hermetic motors, with rated voltage and frequency applied, shall be in accordance with the values given in the following tables which represent the upper limit of the range of application for these motors.

18.081.2 Locked-Rotor Current

The locked-rotor currents of 60-hertz hermetic motors, with rated voltage and frequency applied and with rotor locked, shall not exceed the values given in the following tables.

SINGLE-PHASE HERMETIC MOTORS

1800 Synchronous Rpm			3600 Synchronous Rpm	
Breakdown Torque, Ounce-feet	Locked-Rotor Current, Amperes at 115 Volts		Breakdown Torque, Ounce-feet	Locked-Rotor Current, Amperes at 115 Volts
10.5	20	...	5.25	20
12.5	20	...	6.25	20
15	20	...	7.5	20
18	20	...	9.0	20
21.5	20	...	10.75	21
26	21.5	...	13.0	23
31	23	...	15.5	26
37	28	23*	18.5	29
44.5	34	23*	22.0	33
53.5	40	...	27.0	38
64.5	48	46*	32.0	43
77	57	46*	38.5	49
92.5	68	46*	46.0	56

*Motors having locked-rotor currents within these values usually have lower locked-rotor torques than motors with the same breakdown torque ratings and the higher locked-rotor current values.

Continued on next page

Copyright National Electrical Manufacturers Association
Provided by IHS under license with NEMA
No reproduction or networking permitted without license from IHS
Not for Resale

SINGLE-PHASE HERMETIC MOTORS cont.

1800 Synchronous Rpm		3600 Synchronous Rpm	
Breakdown Torque, Pound-feet	Locked-Rotor Current, Amperes at 230 Volts	Breakdown Torque, Pound-feet	Locked-Rotor Current, Amperes at 230 Volts
7	36	3.5	32
9	38	4.5	39
11	44	5.5	46
14	56	7.0	56
18	68	9.0	69
23	85	11.5	85
29	104	14.5	104
36	126	18.0	126
45	155	22.5	154

POLYPHASE SQUIRREL-CAGE INDUCTION HERMETIC MOTORS

1800 Synchronous Rpm		3600 Synchronous Rpm	
Breakdown Torque, Pound-feet	Locked-Rotor Current, Amperes at 230 Volts	Breakdown Torque, Pound-feet	Locked-Rotor Current, Amperes at 230 Volts
9	24	4.5	24
11	30	5.5	30
14	38	7.0	38
18	48	9.0	48
23	59	11.5	59
29	71	14.5	71
36	85	18.0	85
45	102	22.5	102
56	125	28.0	125
70	153	...	...
88	189	...	...

The temperature of the motor at the start of the test for breakdown torque shall be approximately 25°C.

Where either single-phase or polyphase motors may be used in the same compressor, it is recommended that the polyphase motor used have at least the next larger breakdown torque rating than that of the single-phase motor selected.

18.082 HIGH-POTENTIAL TEST

See 3.01 and 12.03.

18.083 VARIATIONS FROM RATED VOLTAGE AND RATED FREQUENCY

See 12.44.

18.084 DIRECTION OF ROTATION

The direction of rotation for single-phase hermetic motors shall be counter-clockwise facing the lead end.

18.085 TERMINAL LEAD MARKINGS

The terminal lead markings for single-phase hermetic motors shall be as follows.

Start winding—white
Common start and main—white with black tracer
Main winding—white with red tracer

18.086 METHOD OF TEST FOR CLEANLINESS OF SINGLE-PHASE HERMETIC MOTORS HAVING STATOR DIAMETERS OF 6.292 INCHES AND SMALLER

When a test for cleanliness of a single-phase hermetic motor having a stator outside diameter of 6.292 inches or smaller is made, the following extraction test procedure shall be used in determining the weights of residue:

18.086.1 Stators

a. Place a sample stator in a cylindrical metal or porcelain enamel container having an inside diameter 0.50 to 1.5 inches larger than the outside diameter of the stator. Use a perforated or otherwise open spacer to support the stator so that the solvent may circulate freely.
b. Add sufficient methanol at room temperature (70° to 90°F) to completely cover the stator, including windings.
c. Rotate the stator for 10 minutes at 200–240 rpm.
d. Remove the stator, evaporate the liquid in the container to dryness, and heat the residue to constant weight at 220° to 230°F. The residue must be essentially free from metal particles.

18.086.2 Rotors

a. Place two rotors in a container holding 2 liters of toluol. Bring the solution to boil, and boil for 15 minutes.
b. Remove the rotors, evaporate the liquid in the container to dryness, and heat the residue to constant weight at 220° to 230°F. The residue shall be essentially free from metal particles.

Copyright National Electrical Manufacturers Association
Provided by IHS under license with NEMA
No reproduction or networking permitted without license from IHS

Not for Resale

18.087 METHOD OF TEST FOR CLEANLINESS OF HERMETIC MOTORS HAVING STATOR DIAMETERS OF 8.777 INCHES AND SMALLER

18.087.1 Purpose

The purpose of this test is to evaluate the cleanliness of a hermetic stator and rotor by determining the amount, for which weights are not specified, of insoluble residue (metallic chips, lint, dust, etc.) and soluble residue (winding oil, machining oil, etc.) present as a result of the various manufacturing processes. It is not the purpose of this particular procedure to determine the extractables present in an insulation system or to determine the suitability of an insulation system to resist the various refrigerants and oils present in a hermetic unit.

18.087.2 Description

The stator or rotor is vertically agitated in room-temperature Refrigerant 113 at a rate of forty to fifty 2.5-inch strokes per minute for 30 minutes. The Refrigerant 113 washes out insoluble and soluble residues with negligible solvent or chemical action on the insulation or metals present. The insoluble residue is separated from the Refrigerant 113 and the Refrigerant 113 is reduced to near dryness by distillation. Both the insoluble and the soluble residues are dried for 15 minutes at 125°C and weighed.

18.087.3 Sample Storage

The stator or rotor sample shall be placed in a plastic bag which shall be sealed at the site where the sample is taken. The sample shall be stored in this container until it is tested.

18.087.4 Equipment

a. Stator agitation equipment
b. Distilling equipment
c. Hot plate
d. Oven
e. Aluminum weighing dishes
f. Glass beakers
g. Stainless steel containers

18.087.5 Procedure

a. Select a stainless steel container with a diameter which is 0.50 to 1.5 inches larger than the stator or rotor diameter and at least 4 inches higher than the total stator or rotor heights.
b. Position the stator or rotor on a holder so that there will be a 0.50-inch clearance between the stator or rotor and the bottom of the container at the bottom of the stroke. With the stator or rotor positioned in the container, pour in enough Refrigerant 113 so that there will be a minimum of 1 inch of liquid above the upper end wire or end ring with the supporting holder at the top of the stroke.
The total residue content of the Refrigerant 113 used in the stator cleanliness test shall be 0.0010 grams per liter maximum. This shall be determined by transferring 1000 milliliters of Refrigerant 113 to a 4000-milliliter Erlenmeyer flask connected to a distilling condenser.
Distill over the Refrigerant 113 until a volume of less than 100 milliliters remains in the flask. Transfer this portion to a tared aluminum dish which is to be carefully warmed on a hot plate until between 0.25 and 0.50 centimeters of liquid remains. Dry the dish and residue for 15 minutes at 125°C, cool for 15 minutes in a desiccator, and weigh to the nearest 0.001 gram.
c. Agitate vertically the stator or rotor in Refrigerant 113 at 25°C plus or minus 5°C at a rate of forty to fifty 2.5 inch strokes per minute for 30 minutes.
After 30 minutes of agitation, lift the stator or rotor above the surface of the Refrigerant 113 and allow it to drain until the dripping stops.
d. Transfer the Refrigerant 113 containing the soluble and insoluble residue (from item 3) to a 4000-milliliter Erlenmeyer flask connected to a distilling condenser. Wash the stainless steel container with clean Refrigerant 113 several times and add the washings to the flask. Distill over the Refrigerant 113 until approximately 200 milliliters remain in the flask. Filter this portion through a pre-weighed high-retention filter. Wash the flask with clean Refrigerant 113 several times and filter these washings. Remove the filter and dry it for 15 minutes at 125°C, cool for 15 minutes in a desiccator, and weigh to the nearest 0.001 gram. The following information shall be reported.
1. Weight of the residue
2. Description of the residue
e. Transfer the filtered Refrigerant 113 to a 250-milliliter glass beaker. Wash the filtering flask several times with clean Refrigerant 113 and transfer these washings to the beaker. Carefully warm the beaker and the soluble residue until a volume of less than 100 milliliters remains in the beaker. Transfer the contents of the beaker to a tared aluminum dish. Carefully warm the aluminum dish on a hot plate until between 0.25 and 0.50 centimeters of liquid remains. Dry the dish and soluble residue for 15 minutes at 125°C, cool for 15 minutes in a desiccator, and weigh to the nearest 0.001 gram. The following information shall be reported.
1. Weight of residue
2. Description of the residue
f. The report shall also include the date, stator or rotor type, and the outside diameter and the height of the lamination stacking.

Copyright National Electrical Manufacturers Association
Provided by IHS under license with NEMA
No reproduction or networking permitted without license from IHS
Not for Resale

MANUFACTURING

18.089 ROTOR BORE DIAMETERS AND KEYWAY DIMENSIONS FOR 60-HERTZ HERMETIC MOTORS[1]

The rotor bore diameters and keyway dimensions for 60-hertz hermetic motors shall be:

Rotor Bore Diameter, Inches	CA Dimension Tolerance, Inches		Keyway Dimensions, Inches	
	Plus	Minus	Width	Depth Plus Diameter of Bore
0.625	0.0005	0.0000	...	...
0.750	0.0005	0.0000	...	...
0.875	0.0005	0.0000	0.1885	0.9645
			0.1905	0.9795
1.000	0.0005	0.0000	0.1885	1.0908
			0.1905	1.1058
1.125	0.0008	0.0000	0.251	1.242
			0.253	1.257
1.250	0.0008	0.0000	0.251	1.367
			0.253	1.382
1.375	0.001	0.000	0.313	1.519
			0.315	1.534
1.500	0.001	0.000	0.376	1.669
			0.378	1.684
1.875	0.001	0.000	0.501	2.125
			0.503	2.140
2.125	0.001	0.000	0.501	2.375
			0.503	2.390

18.090 DIMENSIONS FOR 60-HERTZ HERMETIC MOTORS[1]

To assist the designer of the hermetic compressor, the following parametric dimensions for 60-hertz hermetic motors have been compiled; they are based upon information supplied by member companies of the NEMA Motor and Generator Section that build hermetic motors.

BH	Number of Poles	CG (Max) and CH (Max) Three-Phase Lead End	Three-Phase Opposite Lead End	Single-Phase Lead End	Single-Phase Opposite Lead End	BL (Max)	DE (Min)	CB (Max)*	Stud Circle	Stud Diameter of Pin
4.792	2	...	...	1.25	1.25	4.28	2.50	1.12	4.593	0.175
5.480 round	2	...	...	1.25	1.22	4.75	2.75	1.31	5.280	0.255
5.480 round	4	...	...	1.19	1.19	4.88	3.38	1.31	5.280	0.199
5.480 square	2	...	...	1.19	1.19	4.69	2.75	1.31	5.280	0.199
5.480 square	4	...	...	1.06	1.06	4.56	3.12	1.38	5.280	0.199
6.292	2	1.62	1.50	1.50	1.38	5.75	3.25	1.62	5.719	0.255
6.292	4	1.25	1.19	1.38	1.25	5.75	4.06	1.97	5.719	0.255
7.480	2	2.12	2.00	2.00	1.88	6.75	3.88	2.00	6.969	0.255
7.480	4	1.88	1.75	1.88	1.75	6.75	4.50	2.25	6.969	0.255
8.777	2	2.50	2.25	2.25	2.12	8.00	4.69	2.25	8.250	0.255
8.777	4	2.12	2.00	2.00	1.88	8.00	5.44	2.75	8.250	0.255
10.125	2	3.00	3.00	2.50	2.25	9.38	5.50	2.50	9.500	0.380
10.125	4	2.75	2.38	2.75	2.12	9.75	6.38	3.00	9.500	0.380
12.375**	...	...	...	...	...	...	...	...	...	...
15.562**	...	...	...	...	...	...	...	...	...	...

Tolerances for BH Dimensions:
4.792, 5.480, 6.292, 7.480— +0.000 inch, -0.002 inch
8.777, 10.125, 12.375, 15.562— +0.000 inch, -0.003 inch

*Applies to punched counterbores. When a sleeve is used, the dimension should be reduced by 0.25 inch. A rotor counterbore will weaken the structure of the rotor core and will also tend to adversely affect performance by the removal of active material. It is therefore recommended that the counterbore be eliminated where possible and held to a minimum where required.

**With or without shell

[1]For lettering of dimension sheets, see 18.093. For rotor bore diameters and keyway dimensions, see 18.089.

Copyright National Electrical Manufacturers Association
Provided by IHS under license with NEMA
No reproduction or networking permitted without license from IHS

Not for Resale

18.091 FORMING OF END WIRE

The dimensions of end wires shown in 18.090 are suggested values for preliminary design work. Before housing dimensions are finalized, it is recommended that the motor manufacturer be consulted. In any particular motor, dimensions larger or smaller than those shown may be the practicable limit with normal end-wire forming practice. The forming of end wires should be evaluated carefully as excessive forming may tend to damage the stator insulation.

18.092 THERMAL PROTECTORS ASSEMBLED ON OR IN END WINDINGS OF HERMETIC MOTORS

When thermal protectors are used with hermetic motors, the protectors are usually assembled on or in the motor end windings and located so that the best possible heat transfer between the winding and protector can be afforded without abusing the insulation on the motor winding or on the protector. Care must be exercised in assembly as additional forming of the motor winding for location of the protector may weaken or destroy the motor winding insulation.

It is usual practice for the thermal protector to be assembled on or in the winding by the motor manufacturer, or for the motor manufacturer to provide a formed pocket on or in the end winding for insertion of the protector.

Additional forming of the winding after installation of the protector is to be avoided. This forming may weaken the winding insulation, the protective insulation between the protector and the winding, or may change the protector calibration.

As the protector case is often a live current-carrying part, additional insulation between the protector and the winding may be necessary in addition to the motor conductor insulation. The motor manufacturer should be consulted.

End winding dimensions given in 18.090 are for motors without provision for thermal protectors; these dimensions must be increased when thermal protectors are provided. As thermal protectors of different sizes and shapes are available, the motor manufacturer should be consulted for end winding dimensions when thermal protectors are used.

Copyright National Electrical Manufacturers Association
Provided by IHS under license with NEMA
No reproduction or networking permitted without license from IHS
Not for Resale

18.093 LETTERING OF DIMENSIONS FOR HERMETIC MOTORS FOR HERMETIC COMPRESSORS[1,2]

See Figure 18-12.

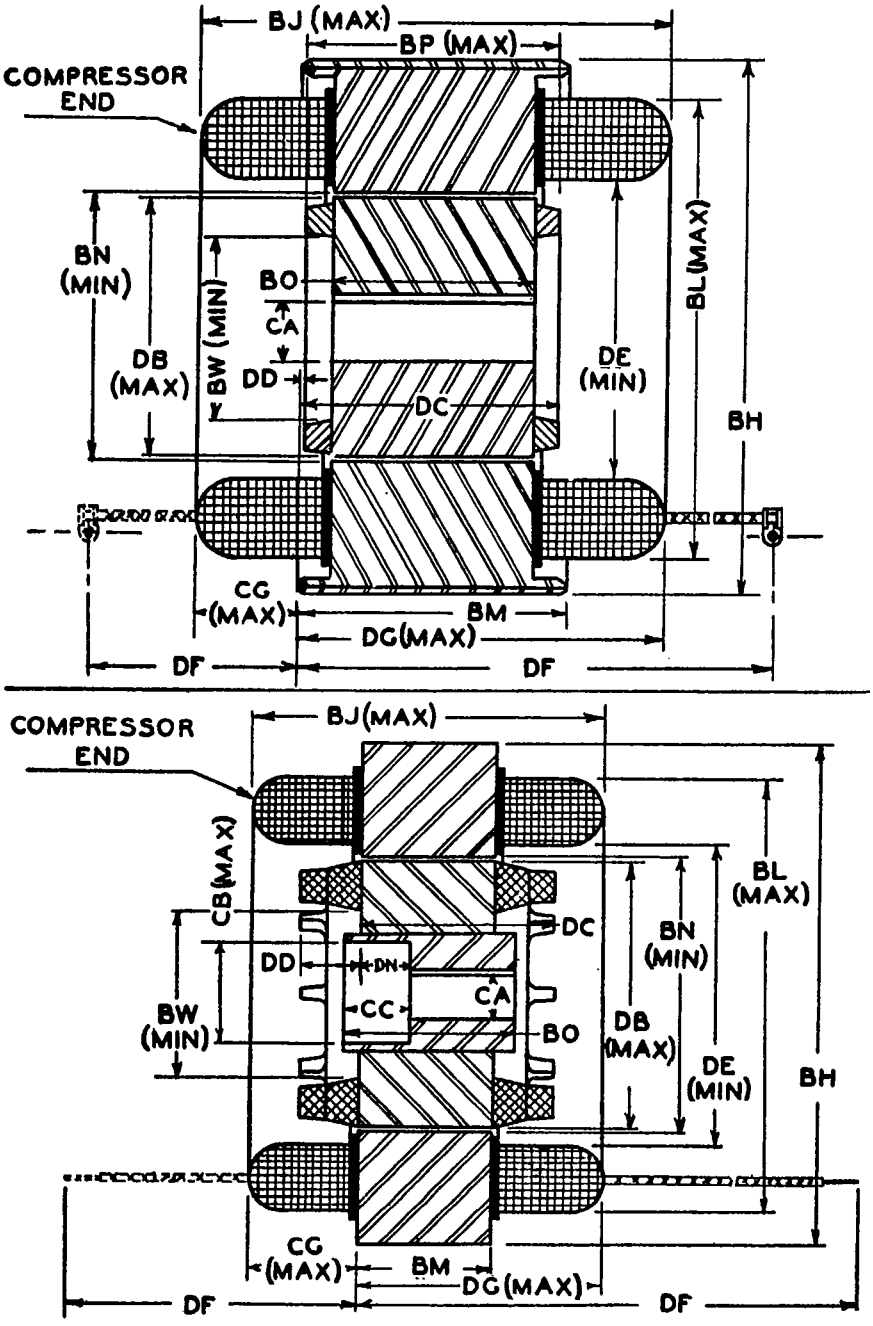

Figure 18-12
LETTERING OF DIMENSIONS

---

[1]For the meaning of the letter dimensions, see 4.01.

[2]The dimensions given in 18.090 apply only when the leads are located as shown by solid lines.

Copyright National Electrical Manufacturers Association
Provided by IHS under license with NEMA
No reproduction or networking permitted without license from IHS

Not for Resale

SMALL MOTORS FOR SHAFT-MOUNTED FANS AND BLOWERS

(Motors in this classification are designed for propeller fans or centrifugal blowers mounted on the motor shaft, with or without air drawn over the motors [not suitable for belted loads].)

18.126 CLASSIFICATION ACCORDING TO ELECTRICAL TYPE

a. Single-phase—1/20 horsepower and larger
   1. Split-phase
   2. Permanent-split capacitor
   3. Shaded-pole
b. Polyphase induction—1/8 horsepower and larger: Squirrel cage, constant speed

RATINGS

18.127 VOLTAGE RATINGS

18.127.1 Single-Phase Motors

The voltage ratings of single-phase motors shall be:
a. 60 hertz—115 and 230 volts
b. 50 hertz—110 and 220 volts

18.127.2 Polyphase Induction Motors

The voltage ratings of polyphase motors shall be:
a. 60 hertz—200, 230, 460, and 575 volts
b. 50 hertz—220 and 380 volts

18.128 FREQUENCIES

Frequencies shall be 50 and 60 hertz.

18.129 HORSEPOWER AND SPEED RATINGS

18.129.1 Single-Speed Motors

See 10.32.1 and 10.32.2.

18.129.2 Two-Speed Motors

a. Speed ratings
   1. Split-phase, pole-changing motors
      1800/1200 rpm synchronous speeds,
      1725/1140 rpm approximate full-load speeds
      1200/900 rpm synchronous speeds,
      1140/850 rpm approximate full-load speeds
      1800/900 rpm synchronous speeds,
      1725/850 rpm approximate full-load speeds
   2. Non-pole changing, single-voltage permanent-split-capacitor and shaded-pole motors shall be designed so that, when loaded by a fan or blower, they will operate at approximately the following speeds.
      a) High-speed connection—the full load rpm indicated in 10.32.2
      b) Low-speed connection—66 percent of synchronous speed
b. Polyphase pole-changing motors—the speed ratings shall be the same as those listed for single-phase motors in item a.1.

TESTS AND PERFORMANCE

18.130 TEMPERATURE RISE

Motors for shaft-mounted fans and blowers shall have Class A insulation.[1] The temperature rise above the temperature of the cooling medium shall be in accordance with 12.42.[2]

18.131 BASIS OF HORSEPOWER RATING

For single-phase induction motors, see 10.34.

18.132 MAXIMUM LOCKED-ROTOR CURRENT—SINGLE-PHASE

See 12.33.

18.133 HIGH-POTENTIAL TESTS

See 3.01 and 12.03.1.

18.134 VARIATIONS FROM RATED VOLTAGE AND RATED FREQUENCY

See 12.44.

---

[1] See 1.66 for description of Class A insulation.

[2] Where air flow is required over the motor from the driven fan or blower in order not to exceed the values given in 12.42, the motor nameplate shall state "air over" and sufficient air shall be provided to meet the required temperature rise limit. The nameplate rating is then dependent upon sufficient air flow over the motor in the final application.

Copyright National Electrical Manufacturers Association
Provided by IHS under license with NEMA
No reproduction or networking permitted without license from IHS
Not for Resale

18.135 DIRECTION OF ROTATION

The direction of rotation for motors for shaft-mounted fans and blowers shall be counterclockwise facing the end opposite the drive.

MANUFACTURING

18.138 GENERAL MECHANICAL FEATURES

Motors for shaft-mounted fans and blowers shall be constructed with the following mechanical features (see dimension diagrams in 18.139).

a. Totally enclosed or open
b. Horizontal motors shall have sleeve bearings and shall have provision for taking axial thrust. Vertical motors, depending on application, shall be permitted to be provided with either ball or sleeve bearings.
c. End-shield clamp bolts shall have a threaded extension which extends a minimum of 0.38 inch beyond the nut.
d. The shaft extension shall be in accordance with 11.31.

18.139 DIMENSIONS AND LETTERING OF DIMENSIONS FOR MOTORS FOR SHAFT-MOUNTED FANS AND BLOWERS

See Figures 18-13, 18-14, and 18-15.

18.140 TERMINAL MARKINGS

See 18.213.

18.141 TERMINAL LEAD LENGTHS

See 18.214.

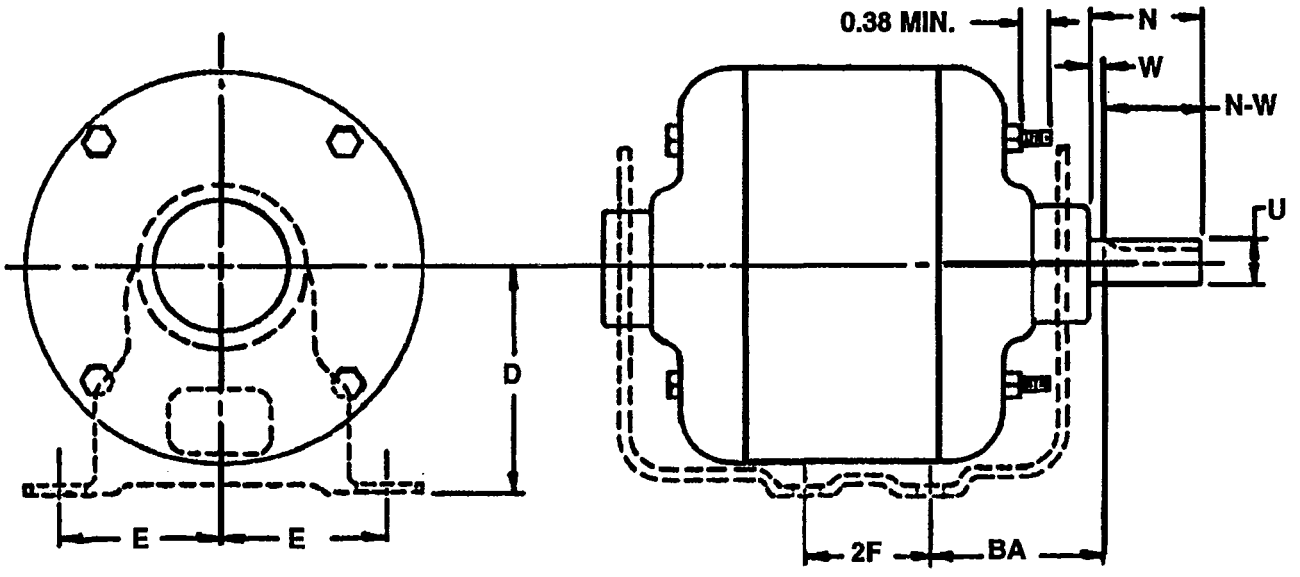

Figure 18-13
MOTORS WITH BASE

Copyright National Electrical Manufacturers Association
Provided by IHS under license with NEMA
No reproduction or networking permitted without license from IHS
Not for Resale

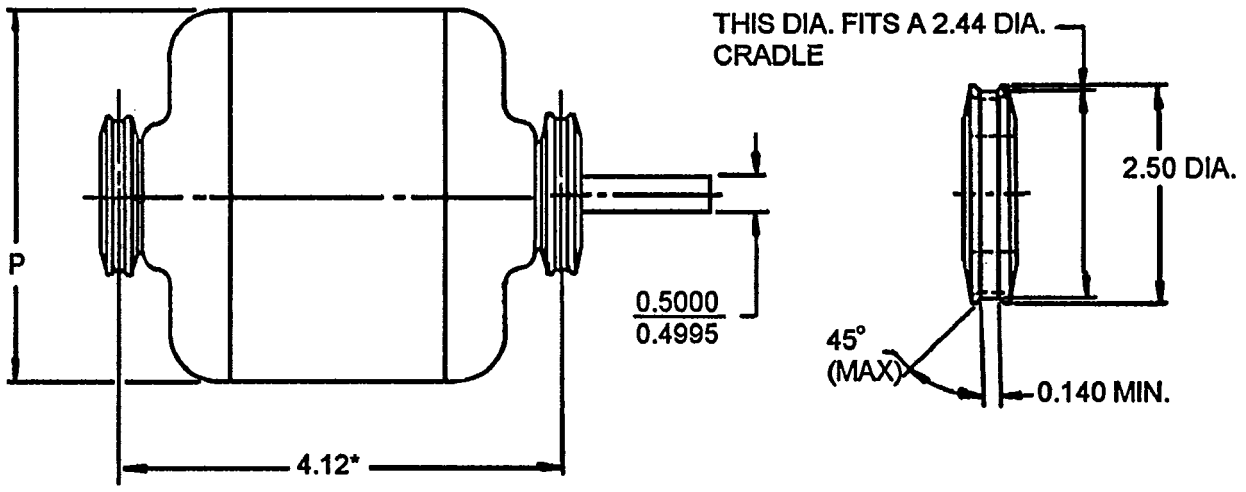

*When this dimension is greater or less than 4.12 inches, it shall vary in increments of 0.25 inch.

Figure 18-14
MOTORS WITHOUT BASE
(P DIMENSION 4.38 INCHES AND LARGER)

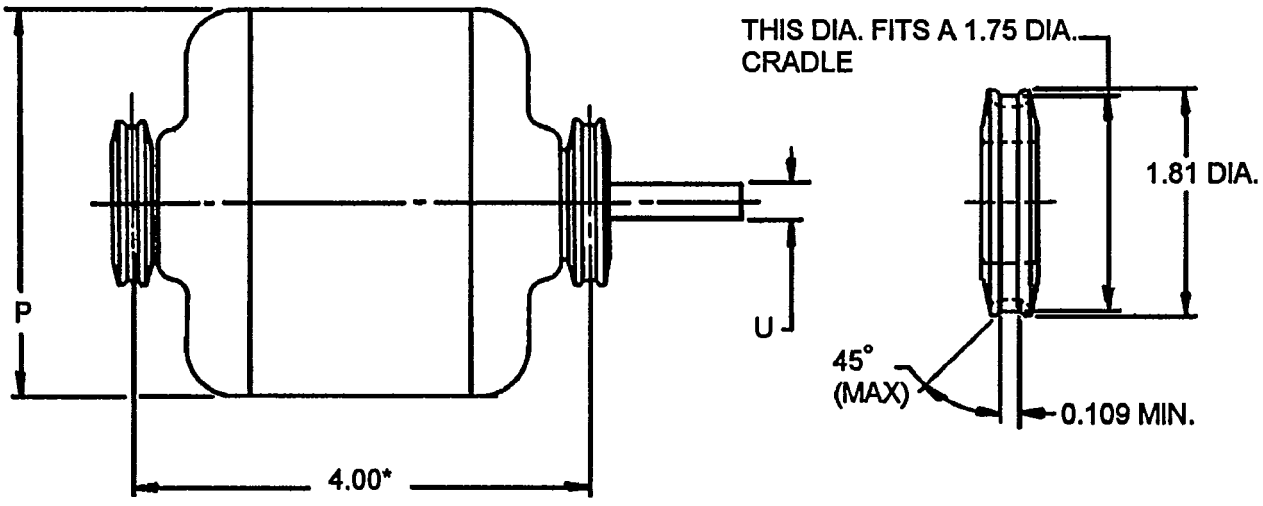

*When this dimension is greater or less than 4.12 inches, it shall vary in increments of 0.25 inch.

P, Inches	U, Inches
Over 3.5	0.3120–0.3125
3.5 and smaller	Standard not yet developed

Figure 18-15
MOTORS WITHOUT BASE
(P DIMENSION SMALLER THAN 4.38 INCHES)

Copyright National Electrical Manufacturers Association
Provided by IHS under license with NEMA
No reproduction or networking permitted without license from IHS
Not for Resale

SMALL MOTORS FOR BELTED FANS AND BLOWERS BUILT IN FRAMES 56 AND SMALLER

(Belted fan and blower motors are motors for operating belt-driven fans or blowers such as are commonly used in conjunction with hot-air-heating and refrigeration installations and attic ventilators.)

18.176 CLASSIFICATION ACCORDING TO ELECTRICAL TYPE

a. Single- and two-speed
   1. Split phase
   2. Capacitor start
   3. Polyphase

RATINGS

18.177 VOLTAGE RATINGS

18.177.1 Single-Phase Motors

The voltage ratings of single-phase motors shall be:
a. 60 hertz—115 and 230 volts
b. 50 hertz—110 and 220 volts

18.177.2 Polyphase Motors

The voltage ratings of polyphase motors shall be:
a. 60 hertz—200, 230, 460, and 575 volts
b. 50 hertz—220 and 380 volts

18.178 FREQUENCIES

Frequencies shall be 50 and 60 hertz

18.179 HORSEPOWER AND SPEED RATINGS

18.179.1 Single-Speed Motors

a. Speed ratings
   1. 60 hertz—1800 rpm synchronous speed, 1725 rpm approximate full-load speed
   2. 50 hertz—1500 rpm synchronous speed, 1425 rpm approximate full-load speed

b. Horsepower ratings
   1. Split-phase—1/6, 1/4, 1/3, 1/2, and 3/4 horsepower
   2. Capacitor-start—1/3, 1/2, 3/4, and 1 horsepower
   3. Polyphase—1/3, 1/2, 3/4, and 1 horsepower

18.179.2 Two-Speed Motors

a. Speed ratings
   1. 60 hertz—1800/1200 rpm synchronous speeds, 1725/1140 rpm approximate full-load speeds, 1800/900 rpm synchronous speeds, 1725/850 rpm approximate full-load speeds
   2. 50 hertz—1500/1000 rpm synchronous speeds, 1425/950 rpm approximate full-load speeds

b. Horsepower ratings
   1. Split-phase—1/6, 1/4, 1/3, 1/2, and 3/4 horsepower
   2. Capacitor-start—1/3, 1/2, 3/4, and 1 horsepower at highest speed
   3. Polyphase—1/3, 1/2, 3/4, and 1 horsepower at highest speed

TESTS AND PERFORMANCE

18.180 TEMPERATURE RISE

Motors for belted fans and blowers shall have either Class A or B insulation. The temperature rise above the temperature of the cooling medium shall be in accordance with 12.42.

18.181 BASIS OF HORSEPOWER RATING

For single-phase induction motors, see 10.34.

18.182 MAXIMUM LOCKED-ROTOR CURRENT

See 12.33 for single-phase motors and 12.35 for three-phase motors.

18.183 HIGH-POTENTIAL TEST

See 3.01, 12.03, and 12.04.

18.184 VARIATIONS FROM RATED VOLTAGE AND RATED FREQUENCY

See 12.44.

18.185 DIRECTION OF ROTATION

Single-phase motors for belted fans and blowers shall be adaptable for either direction of rotation and shall be arranged for counter-clockwise rotation when facing the end opposite the drive.

Copyright National Electrical Manufacturers Association
Provided by IHS under license with NEMA
No reproduction or networking permitted without license from IHS
Not for Resale

MANUFACTURING

18.188 GENERAL MECHANICAL FEATURES

Motors for belted fans and blowers shall have the following mechanical features (see 18.189).

a. Open or dripproof
b. Resilient mounting
c. Automatic reset thermal overload protector
d. Mounting dimensions and shaft extensions in accordance with 11.31

18.189 LETTERING OF DIMENSIONS FOR MOTORS FOR BELTED FANS AND BLOWERS[1]

See Figure 18-16.

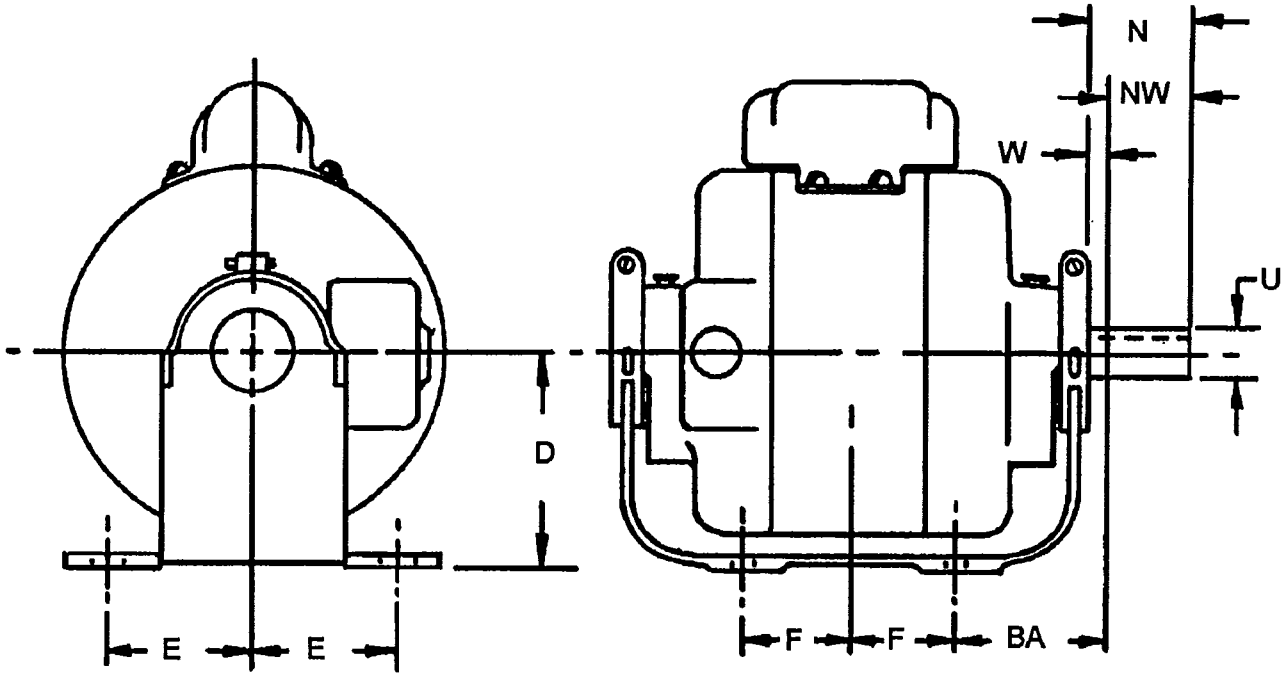

Figure 18-16
LETTERING OF DIMENSIONS

[1]For meaning of letter dimensions, see 4.01. For general mechanical features, see 18.188.

Copyright National Electrical Manufacturers Association
Provided by IHS under license with NEMA
No reproduction or networking permitted without license from IHS
Not for Resale

SMALL MOTORS FOR AIR CONDITIONING CONDENSERS AND EVAPORATOR FANS

18.201 CLASSIFICATION ACCORDING TO ELECTRICAL TYPE

a. Shaded pole
b. Permanent-split capacitor

RATINGS

18.202 VOLTAGE RATINGS

The voltage ratings of single-phase motors shall be:
a. 60 hertz—115, 200, 230, and 265 volts
b. 50 hertz—110 and 220 volts

18.203 FREQUENCIES

Frequencies shall be 60 and 50 hertz.

18.204 HORSEPOWER AND SPEED RATINGS

18.204.1 Horsepower Ratings

a. Shaded-pole motors—1/20, 1/15, 1/12, 1/10, 1/8, 1/6, 1/5, 1/4, and 1/3 horsepower
b. Permanent-split capacitor motors—1/20, 1/5, 1/12, 1/10, 1/8, 1/6, 1/5, 1/4, 1/3, and 1/2 horsepower

18.204.2 Speed Ratings

60 Hertz		50 Hertz	
Synchronous Rpm	Approximate Full-Load Rpm	Synchronous Rpm	Approximate Full-Load Rpm
1800	1550	1500	1300
1200	1050	1000	875
900	800	...	...

TESTS AND PERFORMANCE

18.205 TEMPERATURE RISE

Shaded-pole and permanent-split capacitor motors for air conditioning condensers and evaporator fans shall have a Class A or B insulation system.[1] The temperature rise above the temperature of the cooling medium shall be in accordance with 12.42.[2]

18.206 BASIS OF HORSEPOWER RATINGS

See 10.34, Table 10-6.

18.207 HIGH-POTENTIAL TESTS

See 3.01 and 12.03.1.

The high-potential test voltage for the compressor motor is frequently higher than that for the fan motor, in such cases, the high-potential test voltage applied to the air conditioning unit should be made without the fan motor being connected; or, if the fan motor has been connected, the high-potential test voltage applied to the air conditioning unit should not exceed 85 percent of the high-potential test voltage for the fan motor.

18.208 VARIATIONS FROM RATED VOLTAGE AND RATED FREQUENCY

See 12.44.

18.209 VARIATION FROM RATED SPEED

The variation from specified operating speed for permanent-split capacitor motors shall not exceed plus or minus 20 percent of the difference between synchronous speed and the specified speed for operating speeds above 65 percent of synchronous speed.

The variation from specified operating speed for shaded-pole motors shall not exceed plus or minus 20 percent of the difference between synchronous speed and the specified operating speed for operating speeds above 85 percent of synchronous speed and shall not exceed plus or minus 30 percent of the difference between synchronous speed and the specified operating speed for operating speeds between 75 percent and 85 percent of synchronous speed.

In determining the variation from rated speed, the motor shall be tested with a fan which requires the specified torque at the specified operating speed. This variation in speed applies only to fans where the torque varies approximately as the square of the speed. The test for variation in specified operating speed shall be measured with rated voltage and frequency applied to the motor. The test shall be made after the motor windings have attained a tempera-

---

[1] See 1.66 for description of classes of insulation.

[2] Where air flow is required over the motor from the driven fan in order not to exceed the values given in 12.42, the motor nameplate shall state "air over."

Copyright National Electrical Manufacturers Association
Provided by IHS under license with NEMA
No reproduction or networking permitted without license from IHS
Not for Resale

ture of 65°C or the operating temperature, whichever temperature is lower.

If capacitors, speed control, or other auxiliary devices are not provided by the motor manufacturer, nominal values of impedance for these devices shall be used during the test.

At operating speeds below the foregoing percentages of synchronous speeds, greater variations from the specified operating speed may be expected. At operating speeds much below the foregoing, starting performance, bearing life, and speed variation are very likely to be unsatisfactory to the user.

18.210 TERMINAL MARKINGS—MULTISPEED SHADED-POLE MOTORS

See 18.17.

MANUFACTURING

18.213 TERMINAL MARKINGS

See Figure 18-17.

18.214 TERMINAL LEAD LENGTHS

When shaded-pole and permanent-split capacitor motors are provided with terminal leads, the lead length shall be 12 inches, including 0.75 inch of bare wire at the end.[1]

Tolerances for leads shall be in accordance with the following.

Lengths	Tolerances, Inches	
	Plus	Minus
0.75 inch stripped length	0.06	0.06
12 to 36 inches, inclusive, lead lengths	2	0
Above 36 inches lead length	3	0

18.215 GENERAL MECHANICAL FEATURES

Shaded-pole and permanent-split capacitor motors shall be constructed with the following mechanical features.

a. Open or totally enclosed
b. Sleeve or ball bearing
c. Shaft extension and mounting dimensions in accordance with 18.216 through 18.218 and the following.
   1. Maximum shaft extension length shall be 8.00 inches
   2. Maximum overall length of a shaft with double extensions shall be 20.00 inches
   3. The tolerance for the permissible shaft runout, when measured at the end of the shaft extension (see 4.07), shall be 0.002-inch indicator reading on extensions up to 2.00 inches long with a 0.001-inch additional allowance for each 1.00-inch increment of the extension over the 2.00-inch length.

[1]Where longer leads are required, the lead length shall vary in 3-inch increments up to 36 inches and in 6-inch increments for lengths over 36 inches.

Copyright National Electrical Manufacturers Association
Provided by IHS under license with NEMA
No reproduction or networking permitted without license from IHS
Not for Resale

Copyright National Electrical Manufacturers Association
Provided by IHS under license with NEMA
No reproduction or networking permitted without license from IHS
Not for Resale

18.213 TERMINAL MARKINGS FOR NON-POLE-CHANGING MULTISPEED SINGLE-VOLTAGE NONREVERSIBLE PERMANENT-SPLIT CAPACITOR MOTORS AND SHADED POLE MOTORS[1,2,3]

When multispeed single-voltage permanent-split capacitor (Figures 17a–17e) or shaded-pole motors (Figure 17f) are provided with terminal leads, the leads shall be identified by the terminal lead colors in Figure 18-17.

Figure 18-17a

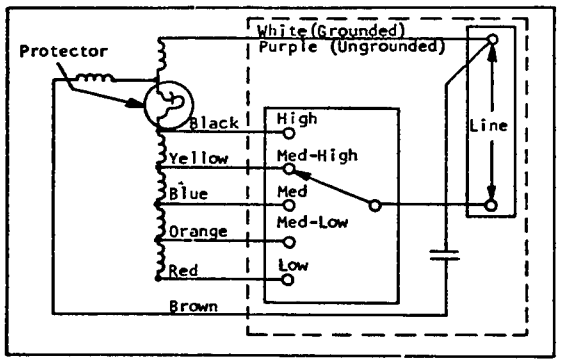

Figure 18-17b

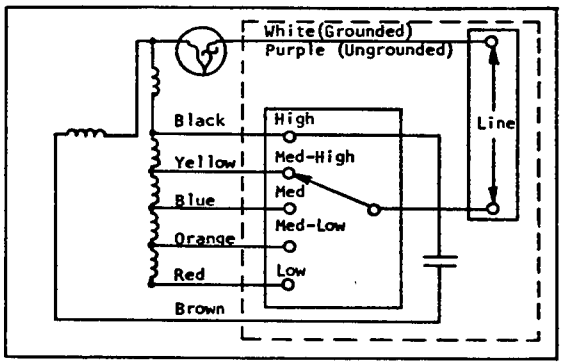

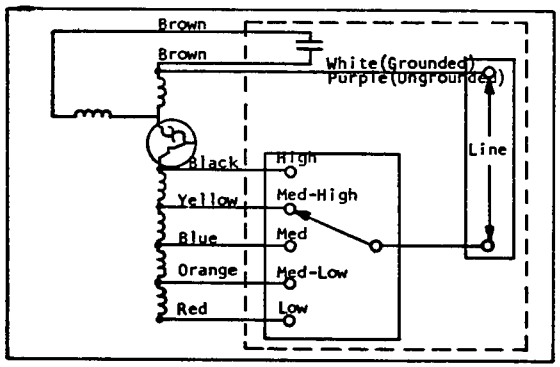

Figure 18-17c

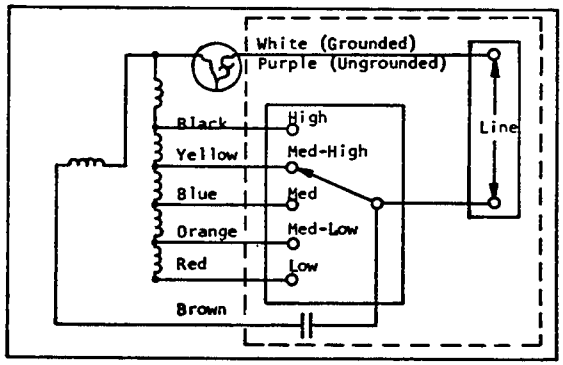

Figure 18-17d

Figure 18-17
TERMINAL MARKINGS

(See next page for notes)

(Continued)

Copyright National Electrical Manufacturers Association
Provided by IHS under license with NEMA
No reproduction or networking permitted without license from IHS

Figure 18-17e

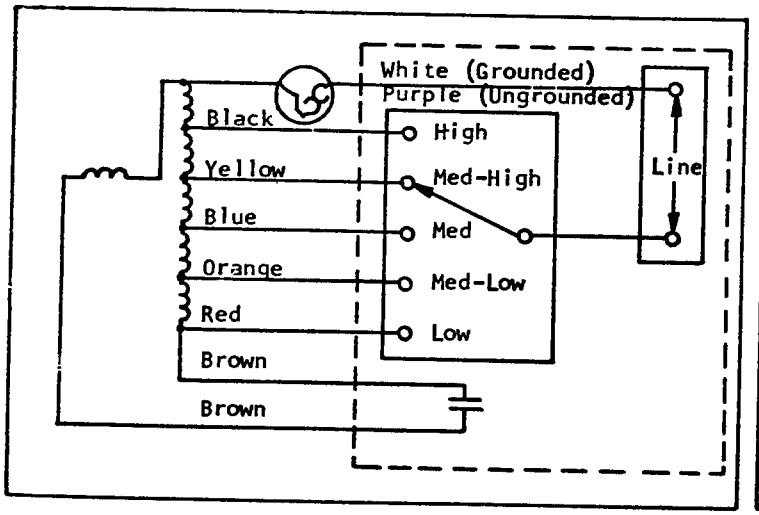

Figure 18-17f

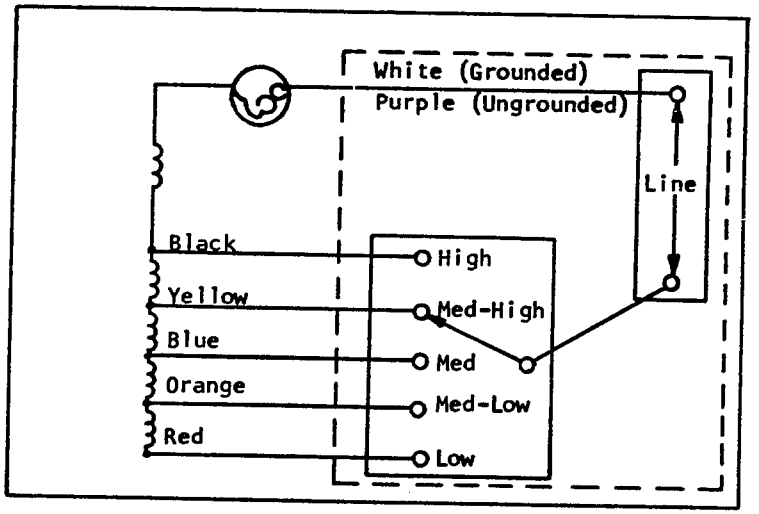

Figure 18-17 continued
TERMINAL MARKINGS

NOTES

1—Parts shown within the dotted area are not a part of the motor. They are included in the diagram to clarify the motor terminal connections to be made by the user and should be displayed in a connection diagram on each individual motor.

2—The capacitor may or may not be mounted on the motor when two capacitor leads are provided.

3—In Figures c and e, the electrical location of the auxiliary winding and capacitor may be reserved.

---

[1]When identification of capacitor leads is necessary, brown shall be used to identify the lead to be connected to the outer wrap of the capacitor and pink to identify the lead to be connected to the inner wrap.

[2]Where the motor may see either a grounded or ungrounded common line lead, purple shall be used to identify the commom line lead.

[3]For single-speed motors, use the colors specified for high speed.
For two-speed motors, use the colors specified for high and low speeds.
For three-speed motors, use the colors specified for high, medium, and low speeds.
For four-speed motors, use the colors specified for high, medium-high, medium-low, and low speeds.

Not for Resale

18.216 DIMENSIONS OF SHADED-POLE AND PERMANENT-SPLIT CAPACITOR MOTORS HAVING A P DIMENSION 4.38 INCHES AND LARGER

See Figure 18-18.

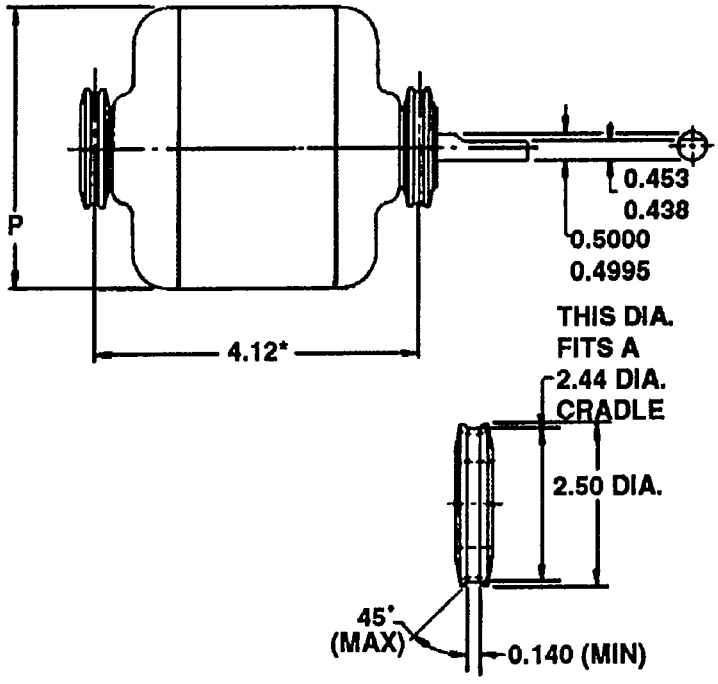

Figure 18-18
DIMENSIONS

*When this dimension is greater or less than 4.12 inches, it shall vary in increments of 0.25 inch.

NOTE—The shaft extension length should be in 0.25-inch increments. For motors with double shaft extensions, the overall length of the shaft should also be in 0.25-inch increments. For motors having shaft extensions of 3.00 inches and longer, the recommended maximum usable length of flat is 2.50 inches.

Copyright National Electrical Manufacturers Association
Provided by IHS under license with NEMA
No reproduction or networking permitted without license from IHS
Not for Resale

Copyright National Electrical Manufacturers Association
Provided by IHS under license with NEMA
No reproduction or networking permitted without license from IHS
Not for Resale

18.217 DIMENSIONS OF SHADED-POLE AND PERMANENT-SPLIT CAPACITOR MOTORS HAVING A P DIMENSION SMALLER THAN 4.38 INCHES

See Figure 18-19.

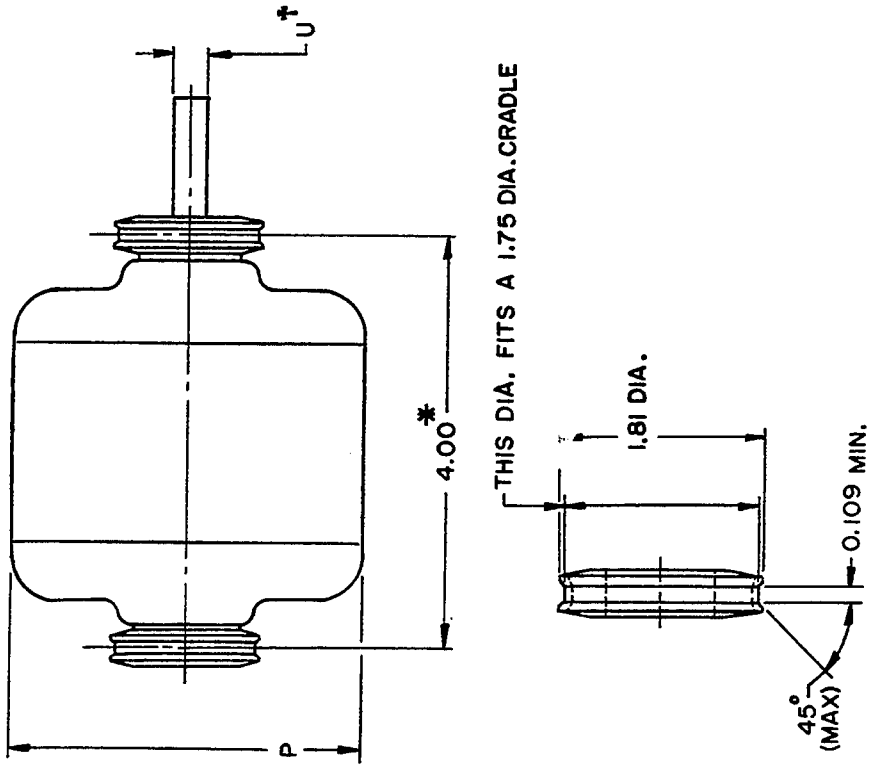

*When this dimension is greater or less than 4.00 inches, it shall vary in increments of 0.25 inch.
†For motors having a P dimension less than 4.38 inches down to but not including 3.50 inches, the U dimension shall be 0.3120-0.3125 inch

Figure 18-19
MOTORS HAVING P DIMENSION SMALLER THAN 4.38 INCHES

18.218 DIMENSIONS FOR LUG MOUNTING FOR SHADED-POLE AND PERMANENT-SPLIT CAPACITOR MOTORS

See Figure 18-20.

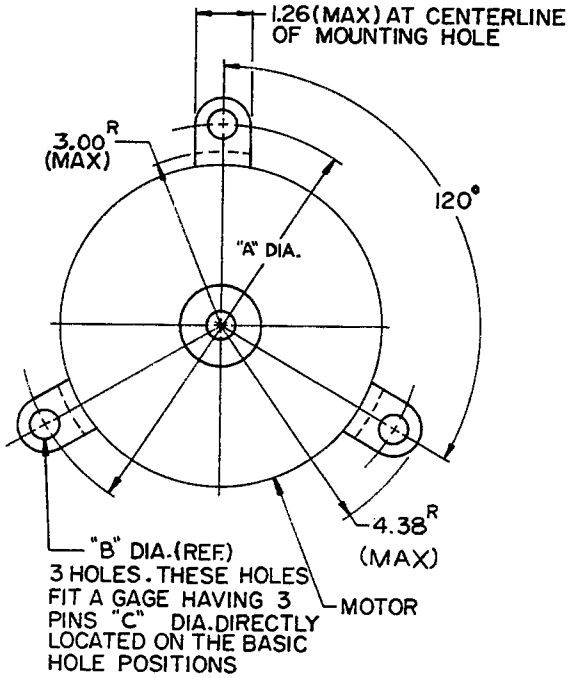

A Hole Circle Diameter	B Hole Diameter*	C Gag Pin Diameter
7.00	0.410	0.330
7.25	0.280	0.200
7.38	0.750	0.661
7.50	0.750	0.661

*Typical examples of diameters for these mounting holes.

All dimensions in inches.

Figure 18-20
LUG MOUNTING DIMENSIONS

APPLICATION DATA

18.219 NAMEPLATE CURRENT

The input current of shaded-pole and permanent-split capacitor motors, when operating at rated load or rated speed with rated voltage and frequency applied, may be expected to vary plus or minus 10-percent from the average value for the particular motor design. Since usual practice is to mark motor nameplates with rated currents approximately 5 percent above the average full-load values, some motors may be expected to have input currents 5 percent greater than the nameplate value. In those cases where the capacitors are not provided by the motor manufacturer, larger tolerances in input current may be expected.

18.220 EFFECT OF VARIATION FROM RATED VOLTAGE UPON OPERATING SPEED

The effect of variation from rated voltage upon the operating speed of typical designs of shaded-pole and permanent-split capacitor motors used for fan drives is shown by speed-torque curves in Figures 18-21 and 18-22, respectively. In each set of curves the solid curve intersecting the 0 torque axis near 100 percent of synchronous speed illustrates the speed-torque characteristic of an average motor of a typical design. The dashed curves enveloping the solid curve illustrate the variation in speed-torque characteristics of the typical motor design when tested at rated voltage and frequency. The dot-dash curves illustrate the variation in speed-torque characteristics within plus or minus 10-percent variation in line voltage for motors of the typical design when operated at rated frequency.

In order to illustrate the variation in motor speed when driving a specified fan, a family of typical fan speed torque curves are shown, intersecting the typical average motor speed-torque curve at operating speeds of 95, 90, 85, 80, 75, and 70 percent of synchronous speed.

A study of the curves shows that, when the operating speed is too low a percentage of synchronous speed, extremely wide variations in operating speed of motors of a particular design may be expected within the plus or minus 10-percent variation from rated voltage that may be encountered in service. Variation in air flow characteristics of the fan of a particular design are not included. Care should be exercised in applying the motor and fan to an air conditioner application, particularly where two- or three-speed operation is desired, so that the operating speed is kept within the range where tolerable starting characteristics and variations in operating speed may be obtained. Close cooperation among the motor manufacturer, fan manufacturer, and air conditioner manufacturer is recommended.

18.221 INSULATION TESTING

Motors for air conditioner condenser and evaporator fans are subjected to unusual application conditions requiring special care in the testing of insulation systems.

18.221.1 Test Conditions

18.221.1.1 One general class of test conditions results in liquid water remaining in the motor or on the windings. This tends to produce erratic and non-repeatable results due to variations in actual contact of water drops with weak or damaged spots in the insulation system. In testing, the motor must be electrically disconnected from all other components of the air conditioning unit and connected to a separate power source. Where short-time tests of this type are used, it should be recognized that they may adequately detect weak or damaged insulation systems, but they are of doubtful significance in measuring the effect of long-time exposure of a particular system to moisture.

18.221.1.2 The second general class of test conditions subjects the motor to high humidity without liquid water being present. This type of test, when conducted over longer periods of time, is more indicative of the relative life expectancy of various motor insulation systems, as they are more uniformly exposed to the deteriorating conditions. To be significant, these tests should be conducted at close to 100-percent relative humidity and continued as long as practicable. Testing time may be shortened by increasing the ambient temperature.

18.221.2 Test Method

IEEE Std 117 describes a suitable test method for evaluating insulation systems. Due to environmental conditions experienced in certain air conditioner applications, it may be desirable to modify the humidity, temperature, contaminants, and vibration specified in IEEE Std 117 to suit known application conditions.

It must be recognized that test conditions and methods of measuring the effects of short-time accelerated insulation tests result in only comparative data between different designs or insulation systems. Extended life tests in the air conditioner under actual service conditions on at least one motor design are necessary to relate test results to actual life.

When comparing insulation systems by any test, a method of determining the end point of the life of the system should be established. The repetitive surge test described in IEEE Std 117 between windings and between windings and ground is a suitable test for this purpose.

Neither a direct-current insulation resistance test nor an alternating-current leakage current test give dependable comparisons between insulation systems in determining the end point in life under test conditions and should not

Copyright National Electrical Manufacturers Association
Provided by IHS under license with NEMA
No reproduction or networking permitted without license from IHS
Not for Resale

be used for this purpose. The measurements may provide an indication of deterioration of a particular insulation system under test or in service, but comparisons of absolute values are frequently misleading. Measurement of alternating-current leakage current to ground is a check of shock hazard conditions. It is used as such in some testing laboratory specifications.

18.222 SERVICE CONDITIONS

Motors for air conditioning condenser and evaporator fans are subjected to environmental conditions such as high humidity, high and low ambient temperatures, water from condensation or rain, and salt air. Extreme care should be used in the proper application of these motors in order that successful operation and good service will result. The following factors should be considered:

a. The motor should be enclosed or adequately shielded to prevent splashing of condensate or rain water into the motor. The wiring to the motor should be arranged to prevent water on the wires from draining into the motor enclosure.
b. The flow of air through the air conditioning unit should be controlled to minimize carrying excessive amounts of moisture or rain over and into the motor.
c. The air conditioning unit should be designed to prevent the possibility of water entering the motor lubrication system.
d. When the ambient temperature of the motor is higher than 40°C for long periods of time, the motor should be derated or abnormal deterioration of the insulation may be expected.
e. When the motor ambient temperature is below 10°C, particular care must be given to the motor starting characteristics and bearing lubricant.
f. Speed stability of air conditioning fan motors may be poor when operating at low speeds. See 18.209 for variations to be expected in motor speeds.

Copyright National Electrical Manufacturers Association
Provided by IHS under license with NEMA
No reproduction or networking permitted without license from IHS
Not for Resale

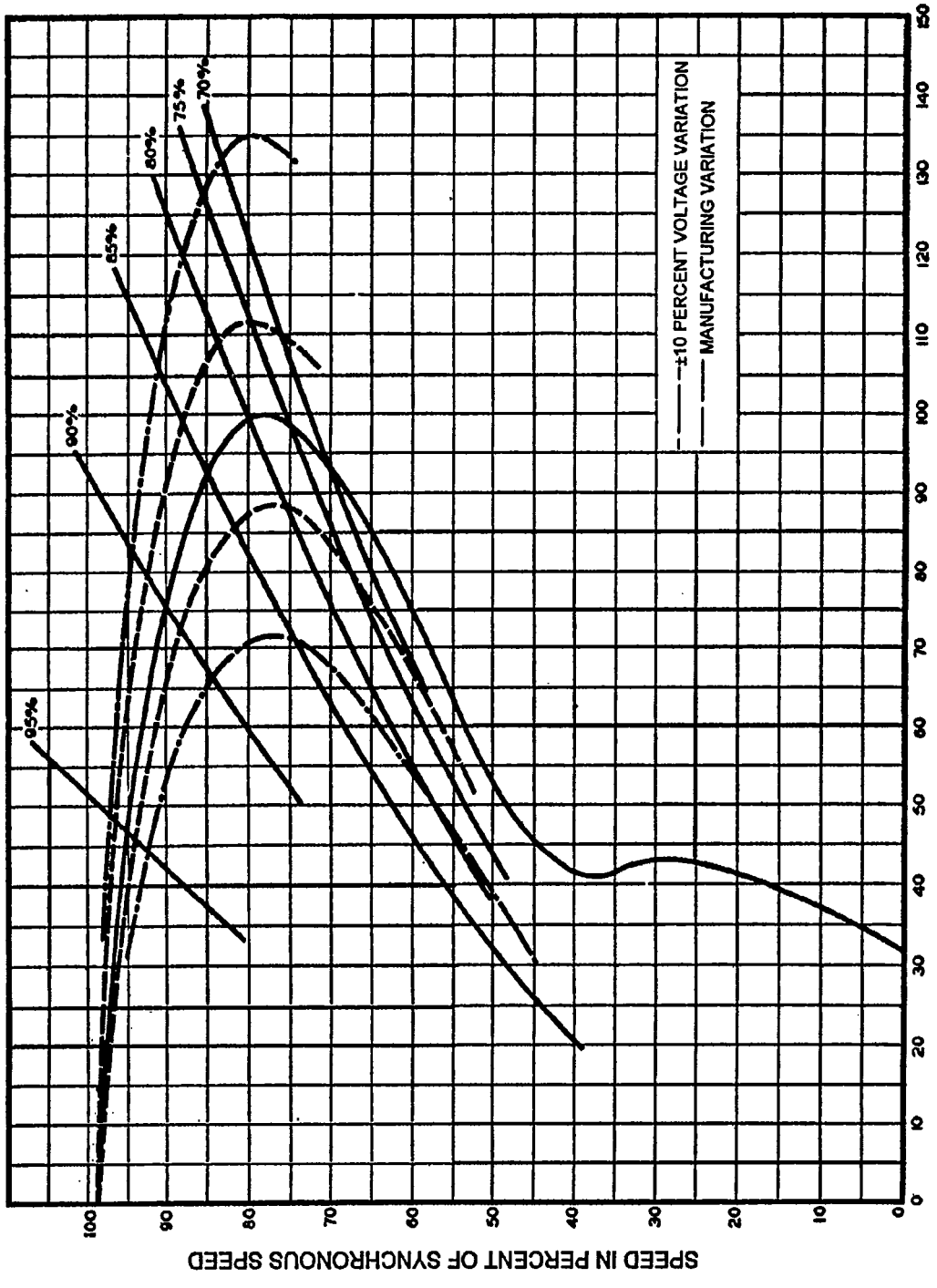

NOTE: Fan load based upon nominal speed-torque curve.

Figure 18-21
TYPICAL SHADED-POLE SPEED-TORQUE CURVE SHOWING EXPECTED SPEED VARIATION DUE TO MANUFACTURING AND VOLTAGE VARIATIONS

Copyright National Electrical Manufacturers Association
Provided by IHS under license with NEMA
No reproduction or networking permitted without license from IHS

Not for Resale

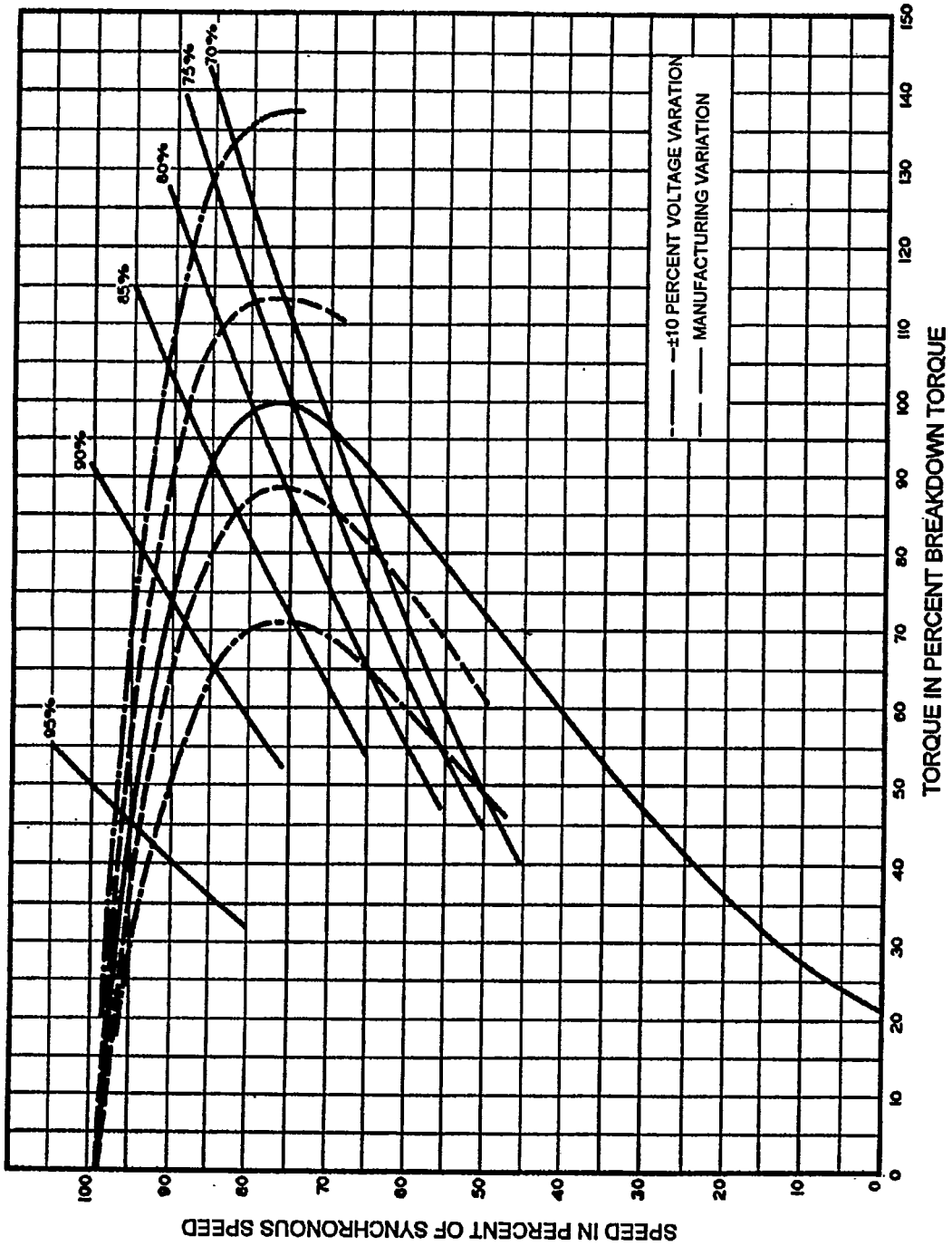

NOTE: Fan load based upon nominal speed-torque curve.

Figure 18-22
TYPICAL PERMANENT-SPLIT CAPACITOR SPEED-TORQUE CURVE SHOWING EXPECTED SPEED VARIATION DUE TO MANUFACTURING AND VOLTAGE VARIATIONS

Copyright National Electrical Manufacturers Association
Provided by IHS under license with NEMA
No reproduction or networking permitted without license from IHS

Not for Resale

SMALL MOTORS FOR SUMP PUMPS

(A sump pump motor is one which furnishes power for operating a pump used for draining basements, pits or sumps.)

18.226 CLASSIFICATION ACCORDING TO ELECTRICAL TYPE

Single-phase—Split-phase

RATINGS

18.227 VOLTAGE RATINGS

The voltage ratings of single-phase motors shall be:

a. 60 hertz—115 and 230 volts
b. 50 hertz—110 and 220 volts

18.228 FREQUENCIES

Frequencies shall be 50 and 60 hertz.

18.229 HORSEPOWER AND SPEED RATINGS

18.229.1 Horsepower Ratings

Horsepower ratings shall be 1/4, 1/3, and 1/2 horsepower.

18.229.2 Speed Ratings

Full-load speed ratings shall be:

a. 60 hertz—1800 rpm synchronous speed, 1725 rpm approximate full-load speed
b. 50 hertz—1500 rpm synchronous speed, 1425 rpm approximate full-load speed

TESTS AND PERFORMANCE

18.230 TEMPERATURE RISE

Sump pump motors shall have either Class A or Class B insulation.[1] The temperature rise above the temperature of the cooling medium for each of the various parts of the motor, when tested in accordance with the rating, shall not exceed the following values.

Class of Insulation	A	B
Coil Windings, Degrees C		
Single phase		
thermometer	50	70
resistance	60	80

The temperature attained by cores and squirrel-cage windings shall not injure the insulation or the machine in any respect.

18.231 BASIS OF HORSEPOWER RATINGS

Ratings of single-phase induction motors shall be in accordance with 10.34.

18.232 TORQUE CHARACTERISTICS

For 60-hertz motors, the breakdown and locked-rotor torques (see 1.48 and 1.51) shall be not less than the following.

	Torque, Oz-ft	
Hp	Breakdown	Locked Rotor
1/4	21.5	14.0
1/3	31.5	20.0
1/2	40.5	20.0

The temperature of the motor at the start of the test shall be approximately 25°C.

18.233 HIGH-POTENTIAL TESTS

See 3.01 and 12.03.

18.234 VARIATIONS FROM RATED VOLTAGE AND RATED FREQUENCY

See 12.44.

18.235 DIRECTION OF ROTATION

The direction of rotation for sump pump motors shall be clockwise facing the end opposite the drive.

[1] See 1.66 for description of classes of insulation.

Copyright National Electrical Manufacturers Association
Provided by IHS under license with NEMA
No reproduction or networking permitted without license from IHS
Not for Resale

MANUFACTURING

18.238 GENERAL MECHANICAL FEATURES

Sump pump motors shall be constructed with the following mechanical features (see Figure 18-23).

a. Open construction. Top end bracket to be totally enclosed or to have ventilating openings protected by louvers, or the equivalent.
b. Bearings shall be suitable for vertical operation.
c. Bottom end bracket to have hub machined for direct mounting on support pipe.
d. Motors shall be permitted to be equipped with automatic thermal protector.
e. Motor frame shall have provision for connection of ground lead.
f. When provided, supply cords shall be three-conductor of at least 18 AWG cord.

18.239 DIMENSIONS FOR SUMP PUMP MOTORS, TYPE K

See Figure 18-23.

18.240 FRAME NUMBER AND FRAME SUFFIX LETTER

When a motor built in a frame given in 11.31 is designed in accordance with the standards for sump pump motors, the frame number shall be followed by the suffix letter K to indicate such construction. Sump pump motors are normally built in 48 or 56 frame sizes.

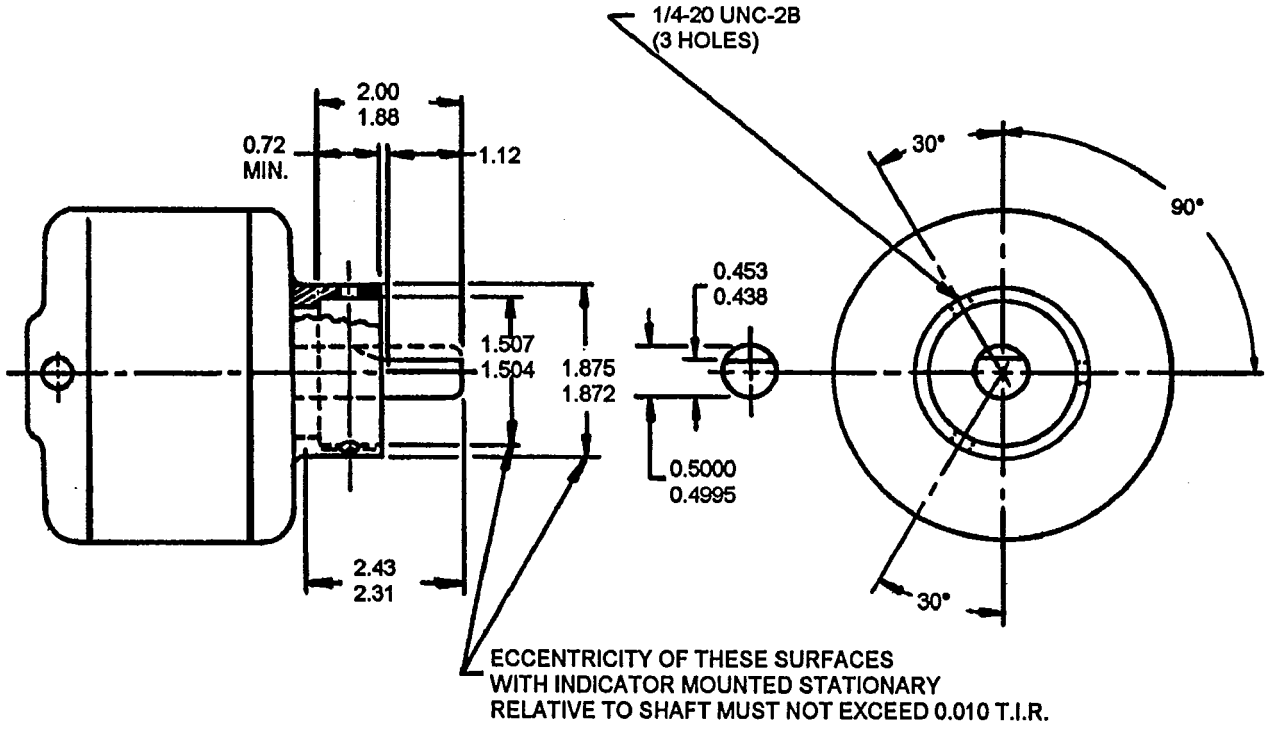

All dimensions in inches

Figure 18-23
SUMP PUMP MOTOR DIMENSIONS

Copyright National Electrical Manufacturers Association
Provided by IHS under license with NEMA
No reproduction or networking permitted without license from IHS
Not for Resale

SMALL MOTORS FOR GASOLINE DISPENSING PUMPS

(A motor of Class I, Group D explosion-proof construction as approved by Underwriters Laboratories Inc. for belt or direct-couple drive of gasoline dispensing pumps of the size commonly used in automobile service stations.)

18.251 CLASSIFICATION ACCORDING TO ELECTRICAL TYPE

a. Single-phase
   1. Capacitor start
   2. Repulsion-start induction

b. Polyphase: Squirrel-cage, constant speed

RATINGS

18.252 VOLTAGE RATINGS

18.252.1 Single-Phase Motors

The voltage ratings of single-phase motors shall be:
a. 60 hertz—115/230 volts
b. 50 hertz—110/220 volts

18.252.2 Polyphase Induction Motors

The voltage ratings of polyphase motors shall be:
a. 60 hertz—200 and 230 volts
b. 50 hertz—220 volts

18.253 FREQUENCIES

Frequencies shall be 50 and 60 hertz.

18.254 HORSEPOWER AND SPEED RATINGS

18.254.1 Horsepower Ratings

The horsepower ratings shall be 1/3, 1/2, and 3/4 horsepower.

18.254.2 Speed Ratings

Speed ratings shall be:
a. 60 hertz—1800 rpm synchronous speed, 1725 rpm approximate full-load speed
b. 50 hertz—1500 rpm synchronous speed, 1425 rpm approximate full-load speed

TESTS AND PERFORMANCE

18.255 TEMPERATURE RISE

Gasoline dispensing pump motors shall have Class A insulation.[1] They shall be rated 30 minutes or continuous, and the temperature rise above the temperature of the cooling medium for each of the various parts of the motor, when tested in accordance with the rating, shall not exceed the following values.

Coil Windings, Degrees C	
Single-phase and polyphase	
thermometer	55
resistance	65

The temperature attained by cores and squirrel-cage windings shall not injure the insulation or the machine in any respect.

NOTE—All temperature rises are based on an ambient temperature of 40°C. Abnormal deterioration of insulation may be expected if this ambient temperature is exceeded in regular operation.

18.256 BASIS OF HORSEPOWER RATINGS

The horsepower ratings of single-phase motors is based upon breakdown torque (see 1.51). For small motors for gasoline dispensing pumps, the value of breakdown torque to be expected by the user for any horsepower shall fall within the range given in the following table.

	Torque, Oz-ft	
Hp	115 Volts 60 Hertz	110 Volts 50 Hertz
1/3	46.0–53.0	55.0–64.0
1/2	53.0–73.0	64.0–88.0
3/4	73.0–100.0	88.0–120.0

The minimum value of breakdown torque obtained in the manufacture of any design will determine the rating of the design. Tolerances in manufacturing will result in individual motors having breakdown torque from 100 percent to approximately 115 percent of the value on which the rating

[1] See 1.66 for description of classes of insulation.

Copyright National Electrical Manufacturers Association
Provided by IHS under license with NEMA
No reproduction or networking permitted without license from IHS
Not for Resale

is based, but this excess torque shall not be relied upon by the user in applying the motor to its load.

The temperature of the motor at the start of the test shall be approximately 25°C.

18.257 LOCKED-ROTOR TORQUE

The locked-rotor torques (see 1.48) of single-phase small motors for gasoline dispensing pumps shall be not less than those shown in the following table.

	Torque, Oz-ft	
Hp	115 Volts 60 Hertz	110 Volts 50 Hertz
1/3	46.0	55.0
1/2	61.0	73.0
3/4	84.0	101.0

The temperature of the motor at the start of the test shall be approximately 25°C.

18.258 LOCKED-ROTOR CURRENT

See 12.33 for Design N motors.

18.259 HIGH-POTENTIAL TEST

See 3.01 and 12.03.

18.260 VARIATIONS FROM RATED VOLTAGE AND RATED FREQUENCY

See 12.44.

18.261 DIRECTION OF ROTATION

The direction of rotation shall be clockwise facing the end opposite the drive.

MANUFACTURING

18.264 GENERAL MECHANICAL FEATURES

Gasoline dispensing pump motors shall be constructed with the following mechanical features (see 18.266).

a. Totally enclosed, explosion proof, Class I, Group D
b. Rigid base mounting
c. Built-in line switch and operating lever (optional)
d. A motor that may exceed its maximum safe temperature under any operating condition (including locked rotor and single phasing) shall be provided with a temperature-limiting device within the motor enclosure. The temperature-limiting device shall not open under full-load conditions within its time rating and shall prevent dangerous temperatures from occurring on the exterior surface of the rotor enclosure with respect to ignition of the explosion atmosphere involved. The maximum safe temperature is 280°C (536°F) for Class I, Group D. The temperature limiting device shall open the motor circuit directly.
e. Voltage selector switch built in on the same end as the swivel connector on single-phase motors
f. Line leads 36 inches long brought out through the swivel connector
g. Swivel connector and line switch shall be permitted to be furnished in locations 90 and 180 degrees from that shown in 18.266.

18.265 FRAME NUMBER AND FRAME SUFFIX LETTER

When a motor having the dimensions given in 18.266 is designated in accordance with the standards for gasoline dispensing pump motors, the frame number shall be followed by the letter G.

Copyright National Electrical Manufacturers Association
Provided by IHS under license with NEMA
No reproduction or networking permitted without license from IHS
Not for Resale

Copyright National Electrical Manufacturers Association
Provided by IHS under license with NEMA
No reproduction or networking permitted without license from IHS

18.266 DIMENSIONS FOR GASOLINE DISPENSING PUMP MOTORS, TYPE G[1]

See Figure 18-24.

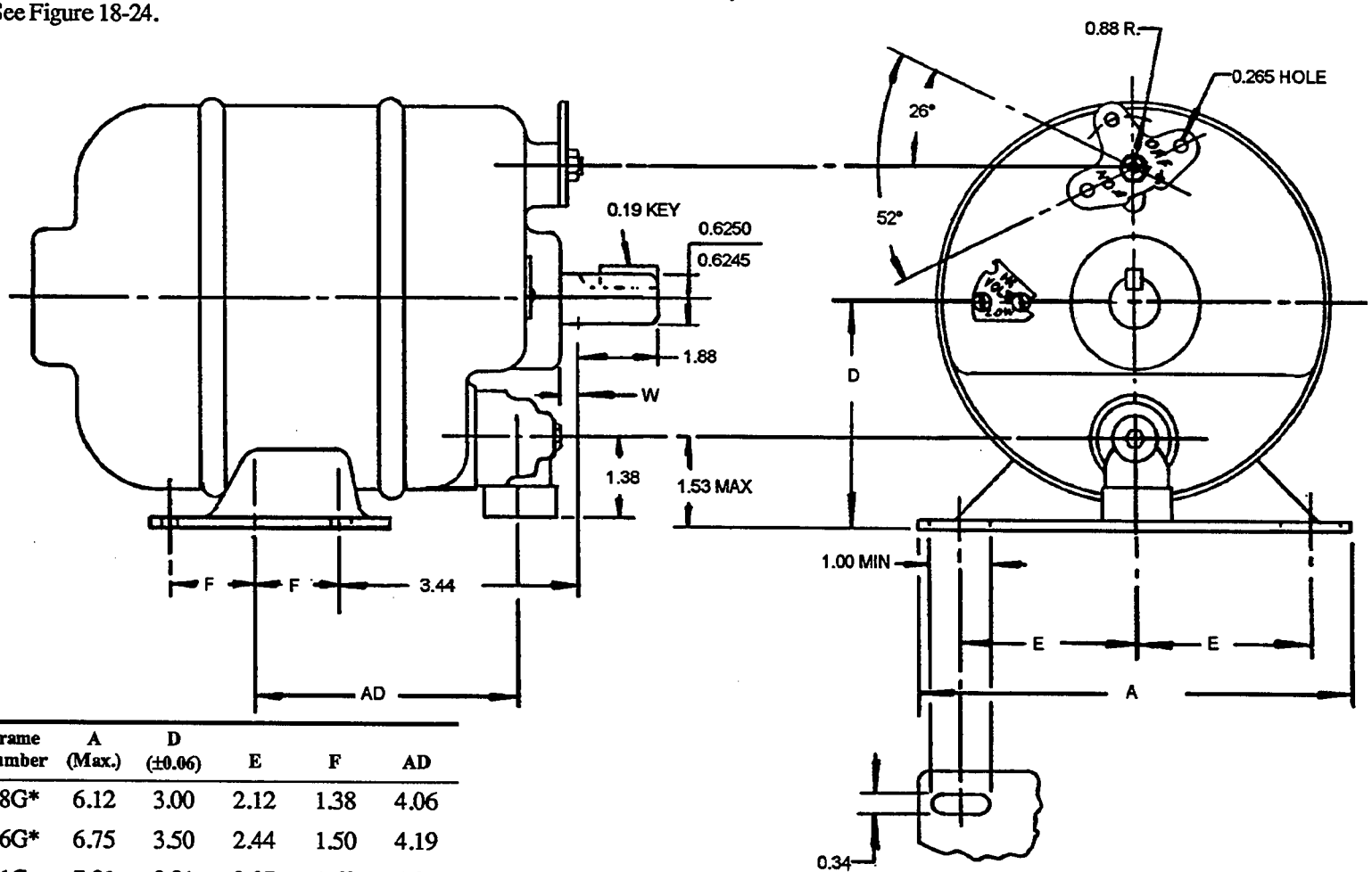

Frame Number	A (Max.)	D (±0.06)	E	F	AD
48G*	6.12	3.00	2.12	1.38	4.06
56G*	6.75	3.50	2.44	1.50	4.19
61G	7.81	3.81	2.97	1.62	4.31

*Approved as Suggested Standard for Future Design.
All dimensions in inches.

Figure 18-24
DIMENSIONS FOR TYPE G GASOLINE DISPENSING PUMP MOTORS

[1]For tolerances on shaft extension diameters and keyseats, see 4.05.

Not for Resale

SMALL MOTORS FOR OIL BURNERS

(A motor for operating mechanical-draft oil burners for domestic installations.)

18.276 CLASSIFICATION ACCORDING TO ELECTRICAL TYPE

Single-phase—Split-phase

RATINGS

18.277 VOLTAGE RATINGS

The voltage ratings of single-phase motors shall be:

a. 60 hertz—115 and 230 volts
b. 50 hertz—110 and 220 volts

18.278 FREQUENCIES

Frequencies shall be 50 and 60 hertz.

18.279 HORSEPOWER AND SPEED RATINGS

18.279.1 Horsepower Ratings

The horsepower ratings shall be 1/12, 1/8, and 1/6 horsepower.

18.279.2 Speed Ratings

Speed ratings shall be:

1. 60 hertz—1800 and 3600 rpm synchronous speed, 1725 and 3450 rpm approximate full-load speed
2. 50 hertz—1500 and 3000 rpm synchronous speed, 1425 and 2850 rpm approximate full-load speed

TESTS AND PERFORMANCE

18.280 TEMPERATURE RISE

Oil-burner motors shall have either Class A or Class B insulation.[1] The temperature rise above the temperature of the cooling medium for each of the various parts of the motor, when tested in accordance with the rating, shall not exceed the following values.

Class of Insulation.....	A	B
Coil Windings, Degrees C*		
Guarded motors		
thermometer.....	50	70
resistance	60	80
Totally enclosed motors		
thermometer.....	55	75
resistance	65	85

The temperatures attained by cores and squirrel-cage windings shall not injure the insulation or the machine in any respect.

*Where two methods of temperature measurement are listed, a temperature rise within the values listed in the table, measured by either method, demonstrates conformity with the standard.

NOTE—All temperature rises are based on an ambient temperature of 40°C. Abnormal deterioration of insulation may be expected if this ambient temperature is exceeded in regular operation.

18.281 BASIS OF HORSEPOWER RATING

For single-phase induction motors, see 10.34.

18.282 LOCKED-ROTOR CHARACTERISTICS

The locked-rotor torque (see 1.48) and locked-rotor current (see 1.54) of 60-hertz motors, with rated voltage and frequency applied, shall be in accordance with the following table.

Hp	Minimum Torque, Oz-ft	Maximum Current Amperes*
	1800 Synchronous Rpm	
1/12	7.0	20.0
1/8	10.0	23.0
1/6	12.0	25.0
	3600 Synchronous Rpm	
1/12	4.0	20.0
1/8	6.0	22.0
1/6	7.0	24.0

*115-volt values.

18.283 HIGH-POTENTIAL TEST

See 3.01 and 12.03.

18.284 VARIATIONS FROM RATED VOLTAGE AND RATED FREQUENCY

See 12.44.

[1] See 1.66 for description of classes of insulation.

Copyright National Electrical Manufacturers Association
Provided by IHS under license with NEMA
No reproduction or networking permitted without license from IHS
Not for Resale

18.285 DIRECTION OF ROTATION

The direction of rotation of oil burner motors shall be clockwise facing the end opposite the drive.

MANUFACTURING

18.288 GENERAL MECHANICAL FEATURES

Oil burner motors shall be constructed with the following mechanical features (see Figure 18-25).

a. Guarded or totally enclosed
b. Motors are to be supplied with nameplate in accordance with 10.39 and in addition marked with the words "oil burner motor."
c. Motors are to be equipped with manual reset inherent thermal overload protector provided with suitable marking to so indicate and with directions for resetting.
d. Motors shall be supplied with:
   1. Terminal leads consisting of two 20-inch lengths of flexible single-conductor wire which enter the enclosure through a hole tapped for 1/2-inch conduit located at 3 o'clock facing the end of the motor opposite the drive
   2. A 12-inch maximum length of two-wire 18 AWG Type SO cable brought out of the enclosure at 5 o'clock facing the end of the motor opposite the drive.

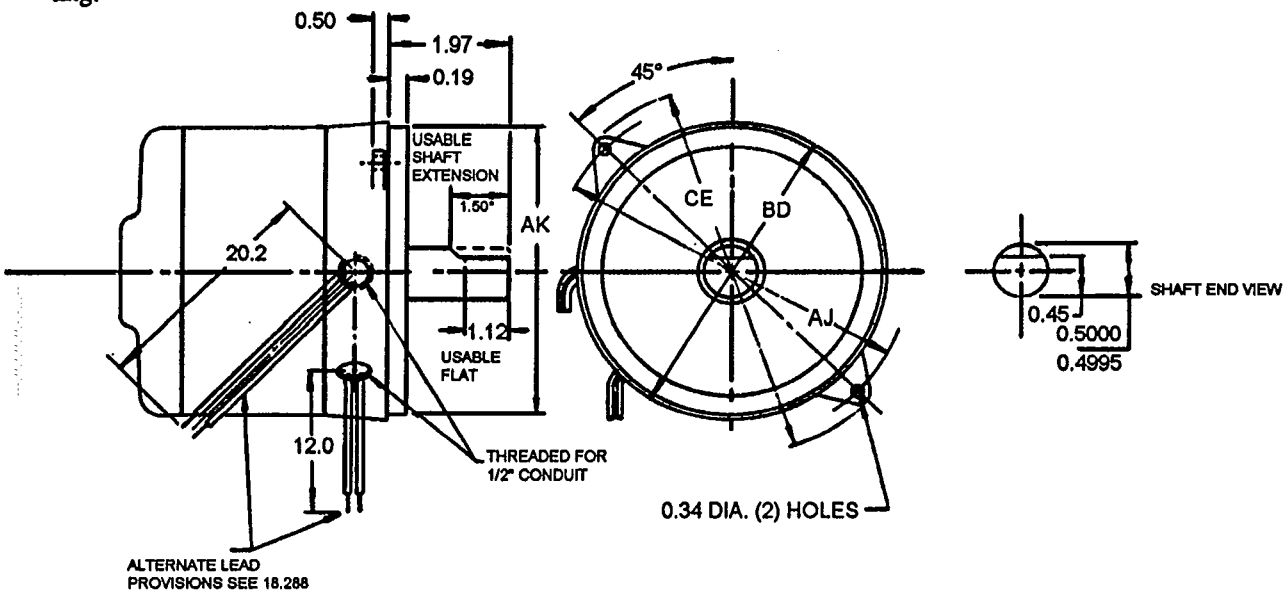

All dimensions in inches.
*If the shaft extension length of the motor is not suitable for the application, it is recommended that deviations from this length be in 0.25 inch increments.

18.289 DIMENSIONS FOR FACE-MOUNTING MOTORS FOR OIL BURNERS, TYPES M AND N

Dimensions and tolerances for face-mounted small motors for oil burners shall be as follows.

18.289.1 Dimensions

AJ	AK	BD Max	CE Max
6.750	5.500	6.25	7.75
7.250	6.375	7.00	8.25

18.289.2 Tolerances

a. Maximum face runout—0.008-inch indicator reading
b. Maximum pilot eccentricity—0.008-inch indicator reading
c. AK dimension— + 0. 000, -0. 005 inch

18.290 FRAME NUMBER AND FRAME SUFFIX LETTER

18.290.1 When a motor of a frame size given in 11.31 is designed in accordance with the standards for oil burner motors and has an AK dimension of 5.500 inches, the frame number shall be followed by the suffix letter M to indicate such construction.

18.290.2 When a motor of a frame size given in 11.31 is designed in accordance with the standards for oil burner motors and have an AK dimension of 6.375 inches, the frame number shall be followed by the suffix letter N to indicate such construction.

Copyright National Electrical Manufacturers Association
Provided by IHS under license with NEMA
No reproduction or networking permitted without license from IHS
Not for Resale

SMALL MOTORS FOR HOME LAUNDRY EQUIPMENT

(A home laundry equipment motor is one which furnishes power for driving a home washing machine, dryer, or a combination washer-dryer.)

18.301 CLASSIFICATION ACCORDING TO ELECTRICAL TYPE

Single phase
a. Split phase
b. Capacitor start

RATINGS

18.302 VOLTAGE RATINGS

The voltage ratings of single-phase motors shall be:
a. 60 hertz—115 and 230 volts
b. 50 hertz—110 and 220 volts

18.303 FREQUENCIES

Frequencies shall be 50 and 60 hertz.

18.304 HORSEPOWER AND SPEED RATINGS

18.304.1 Horsepower Ratings

Horsepower ratings shall be 1/12, 1/8, 1/6, 1/4, 1/3, 1/2, and 3/4 horsepower.

18.304.2 Speed Ratings

Speed ratings shall be:
a. 60 hertz
   1. Single speed—1800 rpm synchronous speed, 1725 rpm approximate full-load speed
   2. Two speed—1800/1200 rpm synchronous speeds, 1725/1140 rpm approximate full-load speeds
b. 50 hertz
   1. Single speed—1500 rpm synchronous speed, 1425 rpm approximate full-load speed
   2. Two speed—1500/1000 rpm synchronous speeds, 1425/950 rpm approximate full-load speeds

18.305 NAMEPLATE MARKING

The following minimum amount of information shall be given on all nameplates. For abbreviation, see 1.80.
a. Manufacturer's name (shall be permitted to be coded)
b. Manufacturer's type and frame designation
c. Horsepower output (optional if amperes is marked)
d. Insulation system designation (if other than Class A)
e. Rpm at full load
f. Frequency
g. Voltage
h. Full-load amperes (optional if horsepower is marked)
i. For motors equipped with thermal protection, the words "thermally protected" or "thermally protected L," whichever is applicable (L designates locked rotor protection only.)

TESTS AND PERFORMANCE

18.306 TEMPERATURE RISE

Motors for home laundry equipment shall have either Class A, Class B, or Class F insulation.[1] The temperature rise, above the temperature of the cooling medium, for each of the various parts of the motor when tested in accordance with the rating shall not exceed the following values.

Coil Windings—Resistance, Degrees C*	
Class A insulation.....	60
Class B insulation.....	80
Class F insulation.....	105

The temperature attained by cores and squirrel-cage windings shall not injure the insulation or the machine in any respect.

*These temperature rises are based on an ambient temperature of 40°C

[1] See 1.66 for description of classes of insulation.

Copyright National Electrical Manufacturers Association
Provided by IHS under license with NEMA
No reproduction or networking permitted without license from IHS
Not for Resale

18.307 BASIS OF HORSEPOWER RATING

For single-phase induction motors, see 10.34, Table 10-5.

18.308 MAXIMUM LOCKED-ROTOR CURRENT

The locked-rotor current of 115-volt laundry equipment motors shall not exceed 50 amperes when tested in accordance with IEEE Std 114 with the current value being read at the end of the 3-second period.

18.309 HIGH-POTENTIAL TEST

See 3.01 and 12.03.

18.310 VARIATIONS FROM RATED VOLTAGE AND RATED FREQUENCY

See 12.44.

MANUFACTURING

18.313 GENERAL MECHANICAL FEATURES

Motors for home laundry equipment shall be constructed with the following mechanical features.

a. Open
b. Sleeve bearing
c. Mounting
   The motors shall be provided with one of the following.
   1. Mounting rings for resilient mounting. The mounting rings dimensions and the spacing between mounting rings shall be as shown in 18.314.
   2. Extended studs
      Stud spacing dimensions shall be as shown in 18.314.
d. Shaft extension in accordance with 18.314
e. When blade terminals are used, the blade shall be 0.25 inch wide and 0.03 inch thick.

Copyright National Electrical Manufacturers Association
Provided by IHS under license with NEMA
No reproduction or networking permitted without license from IHS
Not for Resale

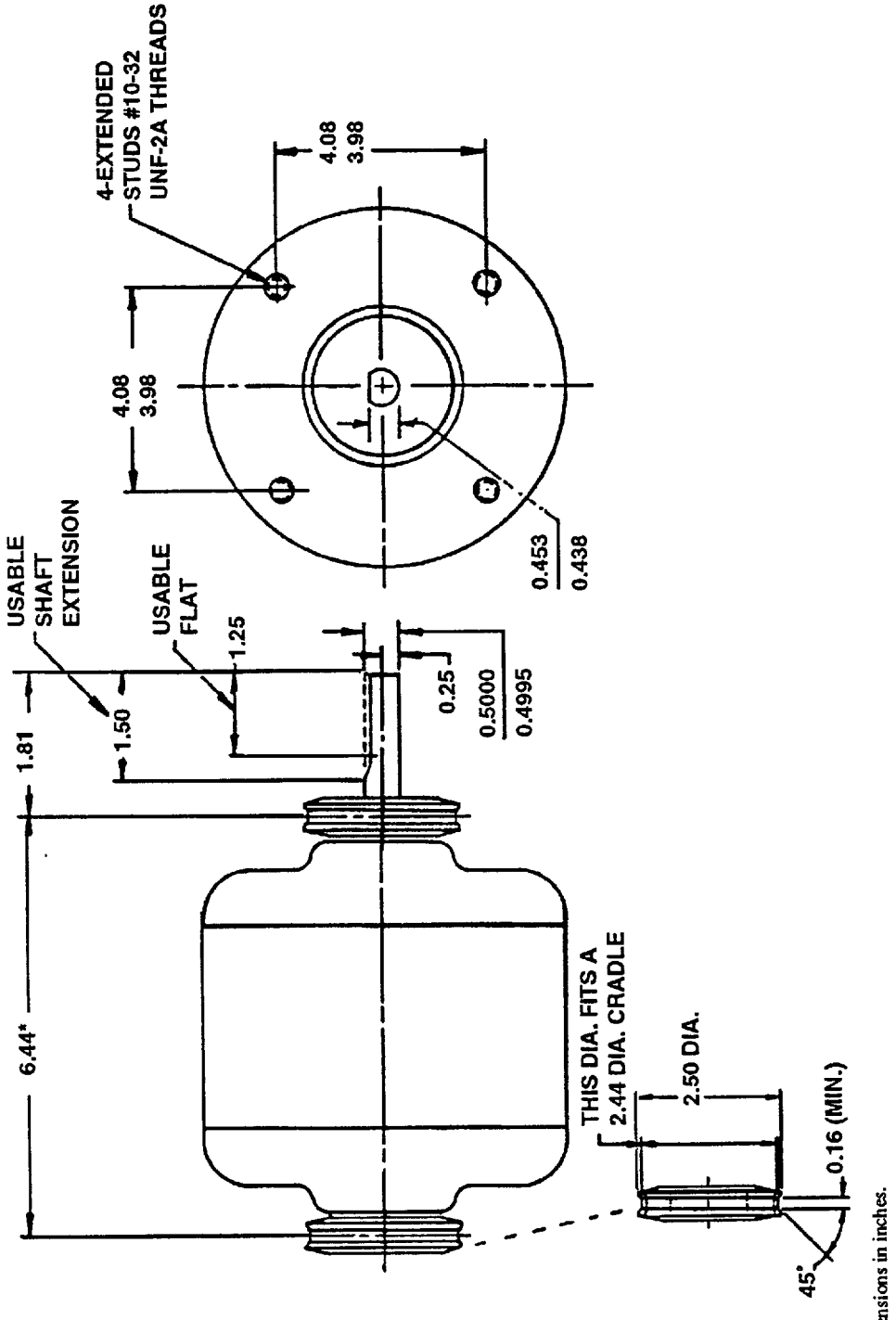

All dimensions in inches.

*When this dimension is greater or less than 6.44-inches, it shall vary in increments of 0.50-inch.

18.314 DIMENSIONS FOR MOTORS FOR HOME LAUNDRY EQUIPMENT

See Figure 18-26.

Figure 18-26
MOTOR DIMENSIONS

Copyright National Electrical Manufacturers Association
Provided by IHS under license with NEMA
No reproduction or networking permitted without license from IHS

Not for Resale

MOTORS FOR JET PUMPS

(A jet-pump motor is an open dripproof-type motor built for horizontal or vertical operation for direct-driven centrifugal ejector pumps.)

18.326 CLASSIFICATION ACCORDING TO ELECTRICAL TYPE

a. Single-phase
   1. Split phase
   2. Capacitor start

b. Polyphase induction; Squirrel cage

RATINGS

18.327 VOLTAGE RATINGS

18.327.1 Single-Phase motors

The voltage ratings for single-phase motors shall be:

a. 60 hertz
   1. Split-phase—115 and 230 volts
   2. Capacitor start—115/230 volts[1]

b. 50 hertz
   1. Split-phase—110 and 220 volts
   2. Capacitor start—110/220 volts[2]

18.327.2 Polyphase Induction Motors ▲

The voltage ratings for polyphase motors shall be:

a. 60 hertz—200, 230, 460, and 575 volts
b. 50 hertz—220 and 380 volts

18.328 FREQUENCIES

Frequencies shall be 50 and 60 hertz.

18.329 HORSEPOWER, SPEED, AND SERVICE FACTOR RATINGS

The horsepower ratings shall be ⅓, ½, ¾, 1, 1½, 2, and 3 horsepower.

The service factor and minimum rpm at service factor shall be:

Hp	Service Factor	Minimum Rpm at Service Factor*
	60 Hertz	
⅓	1.75	3450
½	1.60	3450
¾	1.50	3450
1	1.40	3450
1½	1.30	3450
2	1.20	3450
3	1.15	3450
	50 Hertz	
All	1.0	2850

*This speed is obtained in a test at rated voltage when the temperature of the winding and the other parts of the machine are at approximately 25°C at the start of the test.

TESTS AND PERFORMANCE

18.330 TEMPERATURE RISE

Motors for jet pumps shall have a class A or class B insulation system.[3] The temperature rise above the temperature of the cooling medium shall be in accordance with 12.42 for small ac motors and 12.43 for medium ac motors.

18.331 BASIS OF HORSEPOWER RATING

For single-phase induction motors, see 10.34.

18.332 TORQUE CHARACTERISTICS

For breakdown torque, see 12.32 for single-phase induction motors and 12.37 for polyphase induction motors.

18.333 MAXIMUM LOCKED-ROTOR CURRENT

See 12.33, 12.34, or 12.35, depending on type and rating of motor.

18.334 HIGH-POTENTIAL TEST

See 3.01 and 12.03.

---

[1] Single-phase three-horsepower motors are rated for 230-volt operation only.

[2] Single-phase three-horsepower motors are rated for 220-volt operation only.

[3] See 1.66 for description of Class A and Class B insulation systems.

Copyright National Electrical Manufacturers Association
Provided by IHS under license with NEMA
No reproduction or networking permitted without license from IHS
Not for Resale

18.335 VARIATIONS FROM RATED VOLTAGE AND RATED FREQUENCY

See 12.44 and 12.67.

18.336 DIRECTION OF ROTATION

The direction of rotation for jet-pump motors shall be clockwise facing the end opposite the drive.

MANUFACTURING

18.339 GENERAL MECHANICAL FEATURES

Jet-pump motors shall be constructed with the following mechanical features (see Figures 18-27 and 18-28).

a. Open dripproof construction
b. Grease-lubricated ball bearing on one end suitable for taking axial thrust and with either oil-lubricated sleeve bearing or a ball bearing on the other end suitable for horizontal or vertical position. The axial thrust may be taken at either end consistent with design practice.
c. The face mounting for the drive end shall be in accordance with Figure 18-27.
d. The end shield at the end opposite the drive shall be totally enclosed or shall provide a suitable means to accommodate a drip cover when required for vertical mounting.
e. Standard shaft extension shall be in accordance with Figure 18-27 (frame 56C). Alternate standard shaft extension shall be in accordance with Figure 18-28 (frame 56J).[1]
f. Terminals for line lead connections shall be located in the end shield at the end opposite the drive at the 3 o'clock position.
g. The capacitor unit, when mounted externally on capacitor motors, shall be attached to the motor frame 90 degrees counterclockwise from the terminal location facing the end opposite the drive and as shown by the dotted lines in Figure 18-27.
h. Frame-mounted nameplates shall be attached to the motor in the area from 0 to 180 degrees counterclockwise from the motor terminal location facing the end opposite the drive. The nameplate shall be so located that it will be read when the motor is mounted in a vertical position and the drip cover, when used, is in place. Any other instruction plates shall be immediately adjacent to the motor nameplate.
i. Automatic reset thermal overload protector shall be provided on single-phase motors.
j. When the alternate shaft extension shown in Figure 18-28 is used, a means shall be provided for holding the shaft during assembly or removal of the pump impeller (3/32-inch screwdriver slot in opposite end of shaft, flat in shaft, etc.).

[1] If the shaft extension length of the motor is not suitable for the application, it is recommended that deviations from this length be in 1/4-inch increments.

Copyright National Electrical Manufacturers Association
Provided by IHS under license with NEMA
No reproduction or networking permitted without license from IHS
Not for Resale

18.340 DIMENSION FOR FACE-MOUNTED MOTORS FOR JET PUMPS[1,2,3]

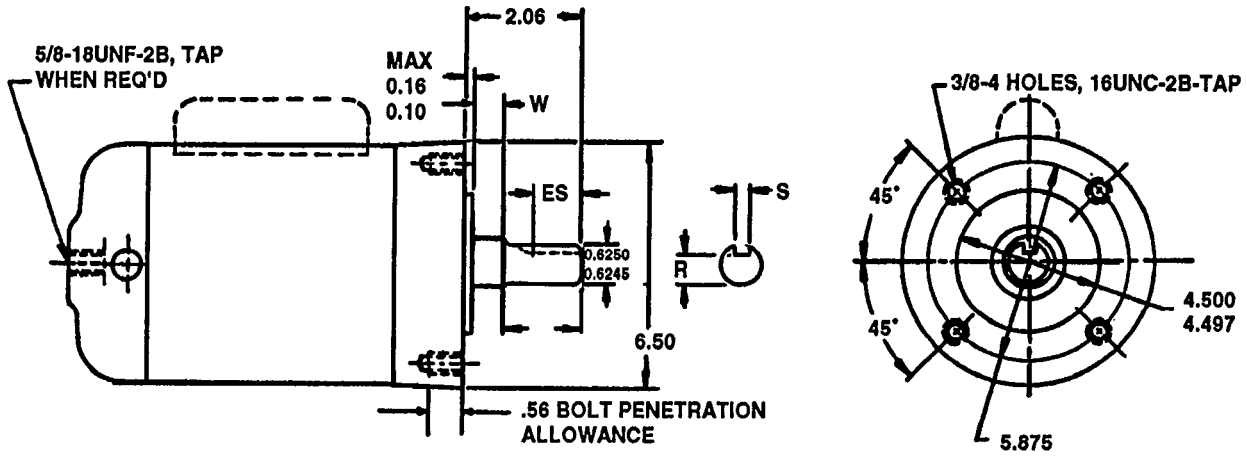

All dimensions in inches.

Figure 18-27
FACE-MOUNTED JET PUMP MOTOR DIMENSIONS

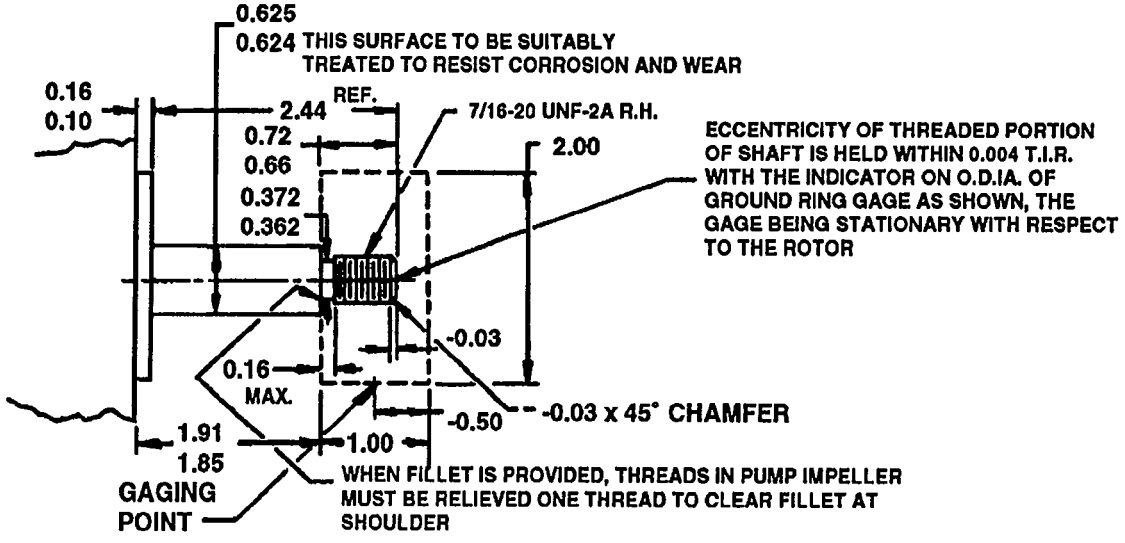

All dimensions in inches.

Figure 18-28
FACE-MOUNTED JET PUMP MOTOR DIMENSIONS

18.341 FRAME NUMBER AND FRAME SUFFIX LETTER

When a motor of a frame size given in 11.31 and 11.60 is designed in accordance with the standards for jet-pump motors and has the alternate standard shaft extension (threaded shaft) shown in Figure 18-28, the frame number shall be followed by the suffix letter J to indicate such construction.

---

[1]Face runout or eccentricity of rabbet (with indicator mounted on the shaft) will be within 0.004-inch gage reading.

[2]For general mechanical features, see 18.339.

[3]See 11.31 and 11.60 for key dimensions.

Copyright National Electrical Manufacturers Association
Provided by IHS under license with NEMA
No reproduction or networking permitted without license from IHS

Not for Resale

SMALL MOTORS FOR COOLANT PUMPS

(A coolant-pump motor is an enclosed ball-bearing-type motor built for horizontal or vertical operation for direct connection to direct-driven centrifugal coolant pumps.)

18.351 CLASSIFICATION ACCORDING TO ELECTRICAL TYPE

a. Single-phase
   1. Split-phase
   2. Capacitor start
   3. Repulsion-start induction

b. Polyphase induction
   Squirrel cage, constant speed

c. Direct current
   Compound wound

RATINGS

18.352 VOLTAGE RATINGS

18.352.1 Single-Phase Motors

The voltage ratings for single-phase motors shall be:

a. 60 hertz
   1. Split-phase—115 and 230 volts
   2. Capacitor start
      a) 1/4 horsepower and smaller—115 and 230 volts
      b) 1/3 horsepower and larger—115/230 volts

b. 50 hertz
   1. Split-phase—110 and 220 volts
   2. Capacitor start
      a) 1/4 horsepower and smaller—110 and 220 volts
      b) 1/3 horsepower and larger—110/220 volts

18.352.2 Polyphase Induction Motors ▲

The voltage ratings for polyphase motors shall be:

a. 60 hertz—200, 230, 460, and 575 volts
b. 50 hertz—220 and 380 volts

18.352.3 Direct-current Motors ▲

115 and 230 volts.

18.353 FREQUENCIES

Frequencies for single-phase and polyphase induction motors shall be 50 and 60 hertz.

18.354 HORSEPOWER AND SPEED RATINGS

Horsepower and speed ratings shall be as noted in the following table.

	60 Hertz		50 Hertz	
Brake Hp Rating	Synchronous Rpm	Approximate Full-Load Rpm	Synchronous Rpm	Approximate Full-Load Rpm
1/20	3600	3450	3000	2850
	1800	1725	1500	1425
1/12	3600	3450	3000	2850
	1800	1725	1500	1425
1/8	3600	3450	3000	2850
	1800	1725	1500	1425
1/6	3600	3450	3000	2850
	1800	1725	1500	1425
1/4	3600	3450	3000	2850
	1800	1725	1500	1425
1/3	3600	3450	3000	2850
	1800	1725	1500	1425
1/2	3600	3450	3000	2850
	1800	1725	1500	1425
3/4	3600	3450	3000	2850
	1800	1725	1500	1425
1	3600	3450	3000	2850

Copyright National Electrical Manufacturers Association
Provided by IHS under license with NEMA
No reproduction or networking permitted without license from IHS
Not for Resale

TESTS AND PERFORMANCE

18.355 TEMPERATURE RISE

Motors for coolant pumps shall have Class A insulation.[1]

The temperature rise above the temperature of the cooling medium for each of the various parts of the motor, when tested in accordance with the rating, shall not exceed the following values.

Coil Windings, Degrees C	
Single-phase and polyphase-induction motors*	
thermometer	55
resistance	65
Direct-current motors—thermometer	55
Commutators—thermometer	65

The temperatures attained by cores, squirrel-cage windings, commutators, and miscellaneous parts (such as brushholders and brushes, etc.) shall not injure the insulation or the machine in any respect.

*Where two methods of temperature measurement are listed, a temperature rise within the values listed in the table, measured by either method, demonstrates conformity with the standard.

NOTE—All temperature rises are based on a maximum ambient temperature of 40°C. Abnormal deterioration of insulation may be expected if this ambient temperature is exceeded in regular operation.

18.356 BASIS OF HORSEPOWER RATING

For single-phase induction motors, see 10.34.

18.357 TORQUE CHARACTERISTICS

For breakdown torque, see 12.32 for single induction motors and 12.37 for polyphase-induction motors.

18.358 MAXIMUM LOCKED-ROTOR CURRENT

See 12.33.

18.359 HIGH-POTENTIAL TESTS

See 3.01 and 12.03.

18.360 VARIATIONS FROM RATED VOLTAGE AND RATED FREQUENCY

See 12.44 and 12.64.

18.361 DIRECTION OF ROTATION

The direction of rotation for coolant-pump motors is clockwise, facing the end opposite the drive.

MANUFACTURING

18.364 GENERAL MECHANICAL FEATURES

Coolant-pump motors shall be constructed with the following mechanical features (see 18.340).

a. Totally enclosed
b. Grease-lubricated ball bearings suitable for horizontal or vertical mounting which shall have suitable provision for taking axial trust away from the front end.
c. Back end shield shall be machined in accordance with Figure 18-27, except that the 5/8"-18 tapped hole in the bearing hub shall be omitted.
d. The straight shaft extension shall be in accordance with 11.31 and 11.60 or, alternatively, in accordance with Figure 18-28.
e. Terminals or leads shall be located in the front end shield or on the frame adjacent to the front end shield.
f. The capacitor unit, when mounted externally on capacitor motors, shall be attached to the motor frame 90 degrees counterclockwise from the terminal location while facing the front end of the motors.

[1]See 1.65 for description of Class A insulation.

Copyright National Electrical Manufacturers Association
Provided by IHS under license with NEMA
No reproduction or networking permitted without license from IHS
Not for Resale

SUBMERSIBLE MOTORS FOR DEEP WELL PUMPS—4-INCH

(A submersible motor for deep well pumps is a motor designed for operation while totally submerged in water having a temperature not exceeding 25°C (77°F).)

18.376 CLASSIFICATION TO ELECTRICAL TYPE

a. Single-phase
   1. Split-phase
   2. Capacitor

b. Polyphase induction: Squirrel cage, constant speed

RATINGS

18.377 VOLTAGE RATINGS

18.377.1 Single-Phase Motors

The voltage ratings for single-phase motors shall be:

a. 60 hertz—115 and 230 volts
b. 50 hertz—110 and 220 volts

18.377.2 Polyphase Induction Motors

The voltage ratings for polyphase motors shall be:

a. 60 hertz—200, 230, 460, and 575 volts
b. 50 hertz—220 and 380 volts

18.378 FREQUENCIES

Frequencies shall be 50 and 60 hertz.

18.379 HORSEPOWER AND SPEED RATINGS

18.379.1 Horsepower Ratings

Horsepower ratings shall be:

a. Single-phase, 115 volts—1/4, 1/3, and 1/2 horsepower
b. Single-phase, 230 volts—1/4, 1/3, 1/2, 3/4, 1, 1-1/2, 2, and 3 horsepower
c. Polyphase induction—1/4, 1/3, 1/2, 3/4, 1, 1-1/2, 2, 3, and 5 horsepower

18.379.2 Speed Ratings

Speed ratings shall be:

a. 60 hertz—3600 rpm synchronous speed
b. 50 hertz—3000 rpm synchronous speed

TESTS AND PERFORMANCE

18.380 BASIS OF HORSEPOWER RATING

For single-phase induction motors, see 10.34.

18.381 LOCKED-ROTOR CURRENT

18.381.1 For single-phase small motors, see 12.33.

18.381.2 For single-phase medium motors, see 12.34.

18.381.3 For three-phase medium squirrel-cage induction motors, see 12.35.

18.382 HIGH-POTENTIAL TEST

See 3.01 and 12.03.

18.383 VARIATION FROM RATED VOLTAGE AT CONTROL BOX

See 12.44.

Length and size of cable should be taken into consideration, and the motor manufacturer should be consulted.

18.384 VARIATION FROM RATED FREQUENCY

See 12.44.

18.385 DIRECTION OF ROTATION

The direction of rotation for submersible motors is clockwise facing the end opposite the drive.

18.386 THRUST CAPACITY

When submersible pump motors are operated in a vertical position with the shaft up, they shall be capable of withstanding the following thrust.

Horsepower	Thrust, Pounds
1/4–1-1/2, incl.	300
2–5, incl.	900

MANUFACTURING

18.387 TERMINAL LEAD MARKINGS

The terminal lead markings for single-phase submersible pump motors shall be as follows.

a. Auxiliary winding—red
b. Main winding—black
c. Common auxiliary winding and main winding—yellow

Copyright National Electrical Manufacturers Association
Provided by IHS under license with NEMA
No reproduction or networking permitted without license from IHS
Not for Resale

18.388 GENERAL MECHANICAL FEATURES

See Figure 18-29.

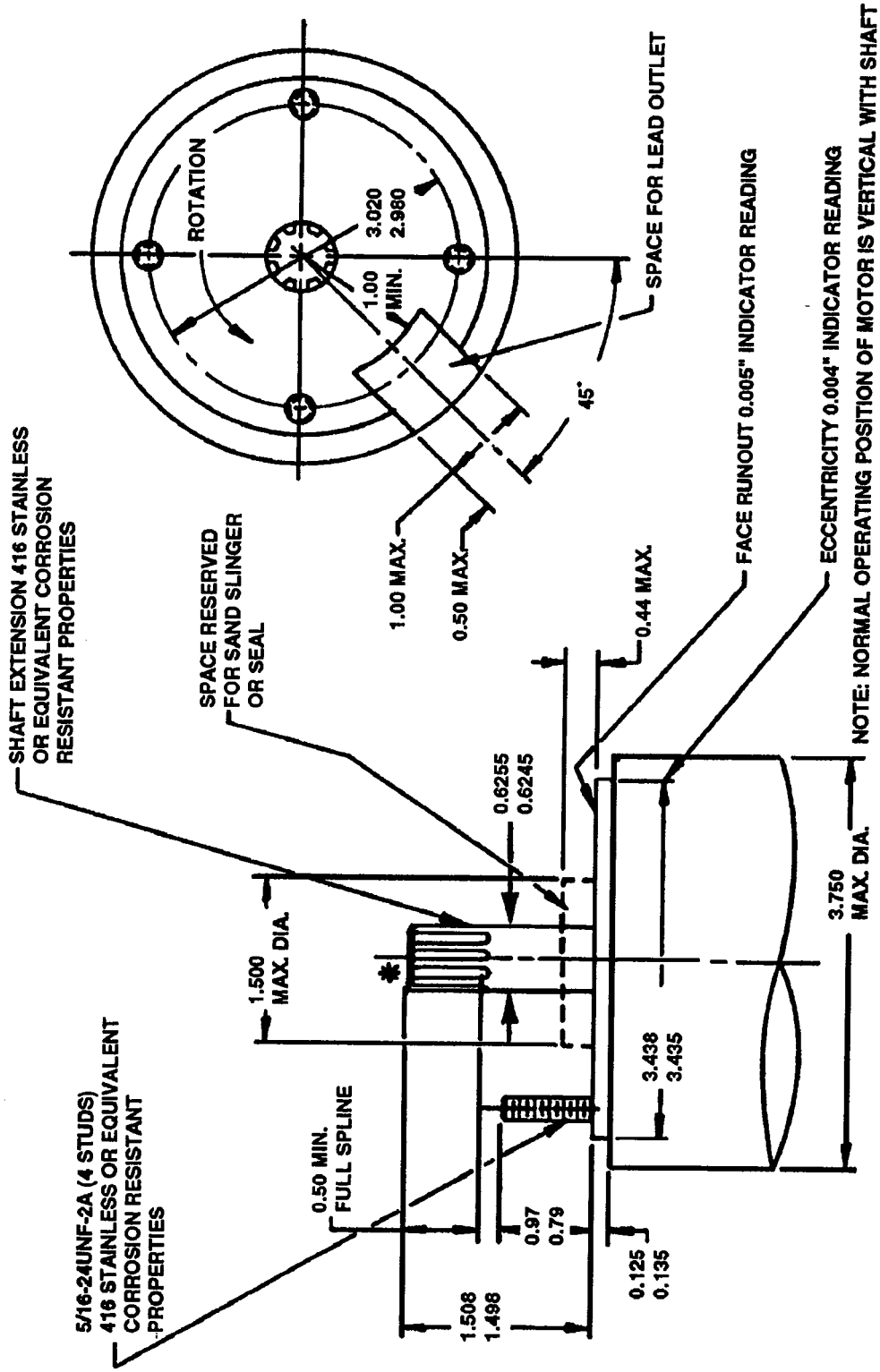

All dimensions in inches.

*Spline Data—14 teeth, 24/48 pitch, 30-degree pressure angle, flat or fillet root, side fit, tolerance Class 5, in accordance with ANSI B92.1, with major diameter reduced to 0.012 inch to allow use with former short dedendum and present standard internal splines.

Figure 18-29
GENERAL MECHANICAL FEATURES

Copyright National Electrical Manufacturers Association
Provided by IHS under license with NEMA
No reproduction or networking permitted without license from IHS

Not for Resale

SUBMERSIBLE MOTORS FOR DEEP WELL PUMPS—6-INCH

(A submersible motor for deep well pumps is a motor designed for operation while totally submerged in water having a temperature not exceeding 25°C (77°F).)

18.401 CLASSIFICATION ACCORDING TO ELECTRICAL TYPE

See 18.376.

RATINGS

18.402 VOLTAGE RATINGS

18.402.1 Single-Phase Motors

The voltage ratings for single-phase motors shall be:

a. 60 hertz—230 volts
b. 50 hertz—220 volts

18.402.2 Polyphase Induction Motors

The voltage ratings for polyphase motors shall be:

a. 60 hertz—200, 230, 460, and 575 volts
b. 50 hertz—220 and 380 volts

18.403 FREQUENCIES

See 18.378.

18.404 HORSEPOWER AND SPEED RATINGS

18.404.1 Horsepower Ratings

Horsepower ratings shall be:

a. Single-phase 230 volts—3, 5, and 7-1/2 horsepower
b. Polyphase induction—3, 5, 7-1/2, 10, 15, 20, 25, and 30 horsepower.

18.404.2 Speed Ratings

Speed Ratings shall be:

a. 60 hertz—3600 rpm synchronous speed
b. 50 hertz—3600 rpm synchronous speed

TESTS AND PERFORMANCE

18.405 BASIS FOR HORSEPOWER RATING

For single-phase induction motors, see 10.34.

18.406 LOCKED-ROTOR CURRENT

18.406.1 For single-phase medium motors, see 12.34.

18.406.2 For three-phase medium squirrel-cage induction motors, the locked-rotor current, when measured with rated voltage and frequency impressed and with rotor locked, shall not exceed the following.

Three-phase 60 Hertz Motors at 230 Volts*	
Hp	Locked-Rotor Current, Amperes
3	64
5	92
7½	130
10	190
15	290
20	390
25	500
30	600

*Locked-rotor current of motors designed for voltages other than 230 volts shall be inversely proportional to the voltages.

18.407 HIGH-POTENTIAL TEST

See 3.01 and 12.03.

18.408 VARIATION FROM RATED VOLTAGE AT CONTROL BOX

See 12.44.

Length and size of cable should be taken into consideration, and the motor manufacturer should be consulted.

18.409 VARIATION FROM RATED FREQUENCY

See 12.44.

18.410 DIRECTION OF ROTATION

See 18.385.

Copyright National Electrical Manufacturers Association
Provided by IHS under license with NEMA
No reproduction or networking permitted without license from IHS
Not for Resale

18.411 THRUST CAPACITY

When submersible pump motors are operated in a vertical position with the shaft up, they shall be capable of withstanding the following thrusts.

Hp	Thrust, Pounds
3	300
5	500
7½	750
10	1000
15	1500
20	2000
25	2500
30	3000

MANUFACTURING

18.412 TERMINAL LEAD MARKINGS

See 18.387.

Copyright National Electrical Manufacturers Association
Provided by IHS under license with NEMA
No reproduction or networking permitted without license from IHS

Not for Resale

18.413 GENERAL MECHANICAL FEATURES

See Figure 18-30.

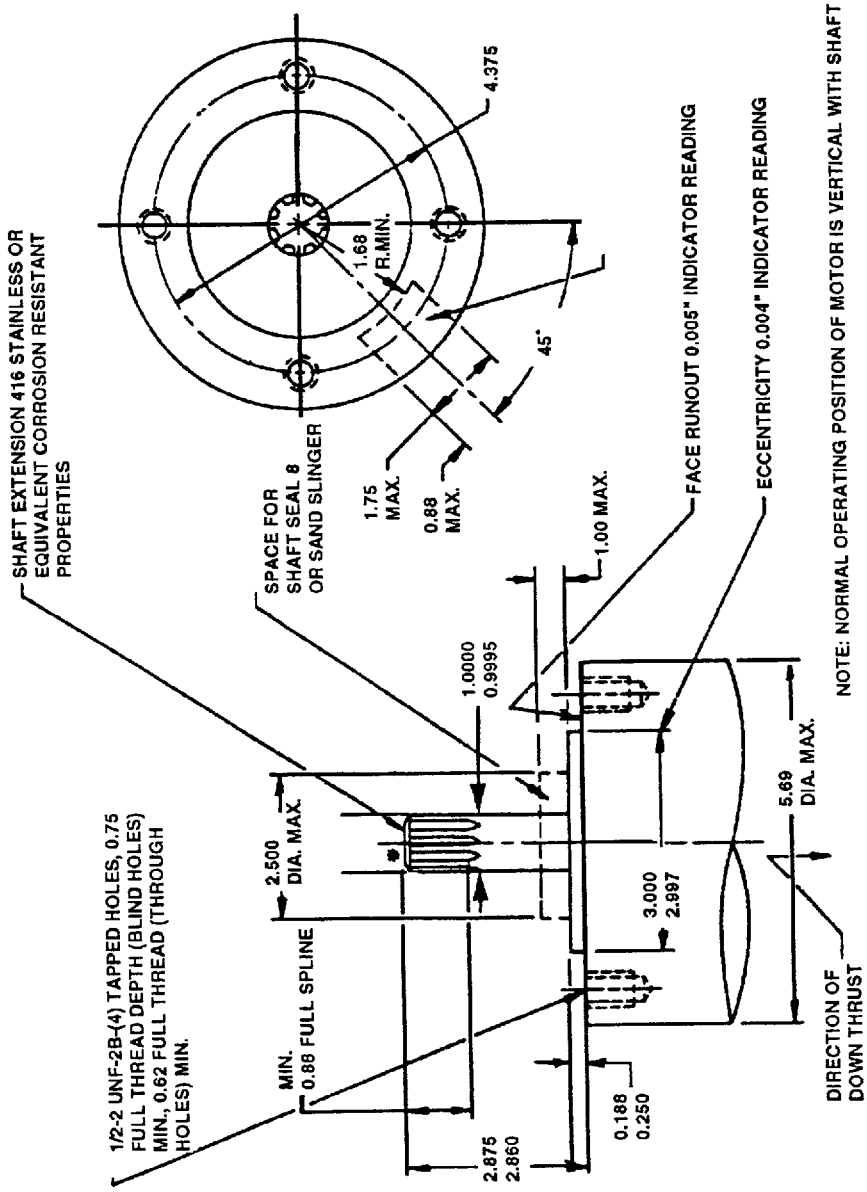

All dimensions in inches.

*Spline Date—15 teeth, 16/32 pitch, 30-degree pressure angle, flat or fillet root, side fit, tolerance Class 5, in accordance with ANSI B92.1, with major diameter reduced 0.016 inch to allow use with former short dedendum and present standard internal splines.

Figure 18-30
GENERAL MECHANICAL FEATURES

Copyright National Electrical Manufacturers Association
Provided by IHS under license with NEMA
No reproduction or networking permitted without license from IHS

Not for Resale

SUBMERSIBLE MOTORS FOR DEEP WELL PUMPS—8-INCH

(A submersible motor for deep well pumps is a motor designed for operation while totally submerged in water having a temperature not exceeding 25°C (77°F).)

18.414 CLASSIFICATION ACCORDING TO ELECTRICAL TYPE

Polyphase induction squirrel-cage, constant speed

RATINGS

18.415 VOLTAGE RATINGS

Voltage ratings shall be:

a. 60 hertz—460 and 575 volts
b. 50 hertz—380 volts

18.416 FREQUENCIES

Frequencies shall be 60 and 50 hertz.

18.417 HORSEPOWER AND SPEED RATINGS

18.417.1 Horsepower Ratings

Horsepower ratings shall be 40, 50, 60, 75, and 100 horsepower.

18.417.2 Speed Ratings ▲

Speed ratings shall be:

a. 60 hertz—3600 rpm synchronous speed
b. 50 hertz—3000 rpm synchronous speed

TESTS AND PERFORMANCE

18.418 LOCKED-ROTOR CURRENT

For squirrel-cage induction motors, the locked-rotor current, when measured with rated voltage and frequency impressed and with rotor locked, shall not exceed the following.

Three-Phase 60 Hertz Motors at 460 Volts*	
Hp	Locked-Rotor Current, Amperes
40	380
50	470
60	560
75	700
100	930

*Locked-rotor current of motors designed for voltages other than 460 volts shall be inversely proportional to the voltages.

18.419 HIGH-POTENTIAL TEST

See 3.01 and 12.03.

18.420 VARIATION FROM RATED VOLTAGE AT CONTROL BOX

See 12.44.

Length and size of cable should be taken into consideration, and the motor manufacturer should be consulted.

18.421 VARIATION FROM RATED FREQUENCY

See 12.44.

18.422 DIRECTION OF ROTATION

See 18.385.

18.423 THRUST CAPACITY

When submersible pump motors are operated in a vertical position with the shaft up, they shall be capable of withstanding the following thrusts.

Hp	Thrust, Pounds
40	4000
50	5000
60	6000
75	7500
100	10000

Copyright National Electrical Manufacturers Association
Provided by IHS under license with NEMA
No reproduction or networking permitted without license from IHS

Not for Resale

18.424 GENERAL MECHANICAL FEATURES

See Figure 18-31.

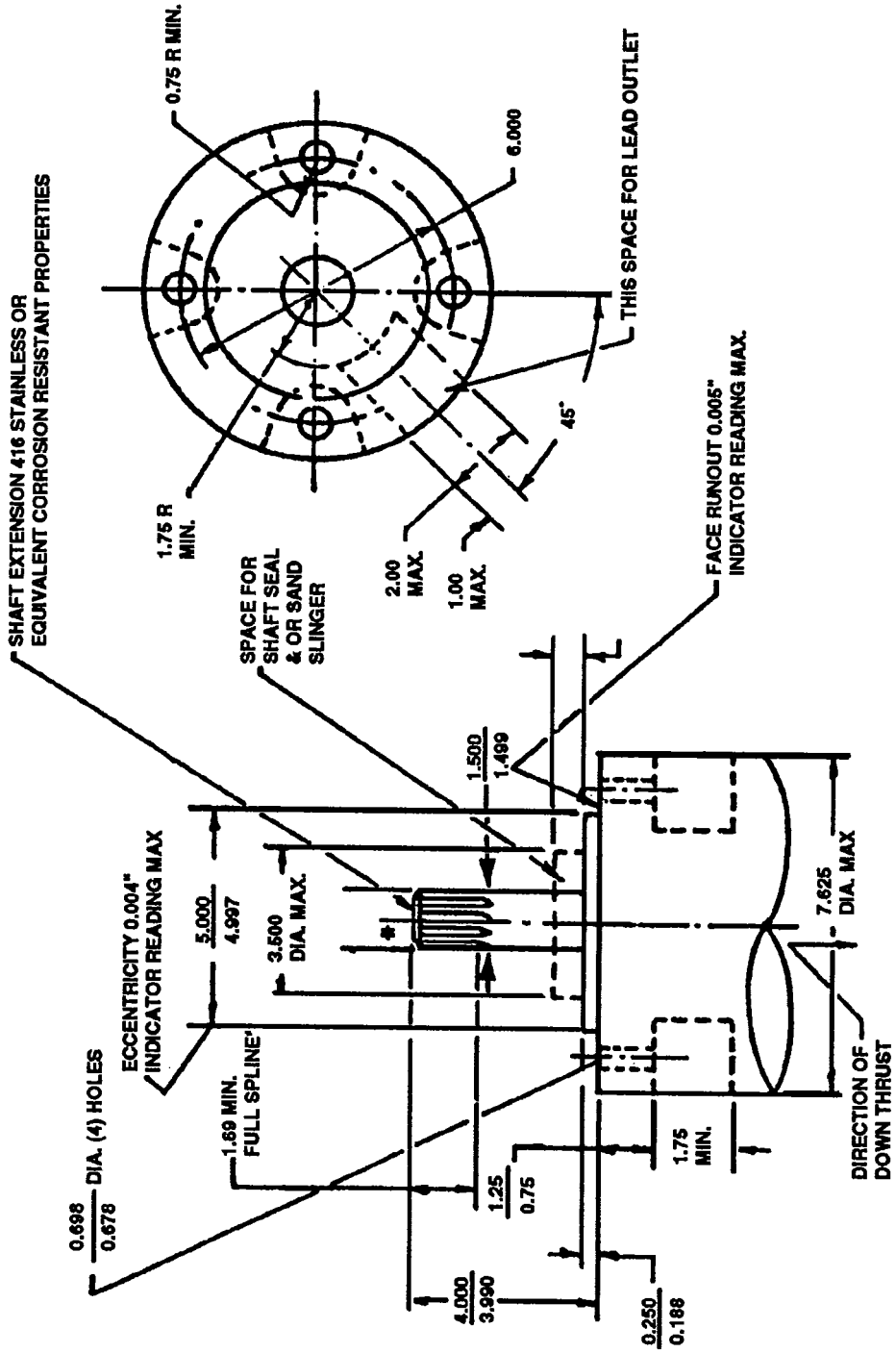

NOTE: NORMAL OPERATING POSITION OF MOTOR IS VERTICAL WITH SHAFT UP.

*Spline Data—23 teeth, 16/32 pitch, 30 degree pressure angle, fillet root, side fit, tolerance Class 5, in accordance with ANSI B92.1.

Figure 18-31
GENERAL MECHANICAL FEATURES

Copyright National Electrical Manufacturers Association
Provided by IHS under license with NEMA
No reproduction or networking permitted without license from IHS

Not for Resale

MEDIUM DC ELEVATOR MOTORS

18.426 CLASSIFICATION ACCORDING TO TYPE

18.426.1 Class DH

Class DH direct-current high-speed elevator motors are open-type motors for use with gear-driven elevators. Speed variation is obtained primarily by armature voltage control.

18.426.2 Class DL

Class DL direct-current low-speed elevator motors are open-type motors for use with gearless elevators. Speed variation is obtained primarily by armature voltage control.

RATINGS

18.427 VOLTAGE RATINGS

Because the speed variation of direct-current elevator motors is primarily obtained by armature voltage control, these motors are operated over a wide range of voltages. Usually the highest applied armature voltage should not exceed 600 volts. Whenever possible, it is recommended that voltage ratings of 230 or 240 volts should be utilized for motors of all horsepower ratings, although voltage ratings of 115 or 120 volts may be used for motors having ratings of 10 horsepower and smaller.

18.428 HORSEPOWER AND SPEED RATINGS

18.428.1 Class DH

When the voltage rating of a Class DH direct-current elevator motor is either 230 or 240 volts (see 18.427), the horsepower and speed ratings shall be:

Hp	Speed, Rpm			
7½	1750	1150	850	...
10	1750	1150	850	...
15	1750	1150	850	...
20	1750	1150	850	650
25	1750	1150	850	650
30	1750	1150	850	650
40	1750	1150	850	650
50	...	1150	850	650
60	...	1150	850	650
75	...	...	850	650
100	...	...	850	650

18.428.2 Class DL

Because of the multiplicity of combinations of traction sheave diameters, car speeds, car loading ratings, and roping, it is impracticable to develop a standard for horsepower and speed ratings for Class DL direct-current elevator motors.

18.429 BASIS OF RATING

18.429.1 Class DH

A Class DH direct-current elevator motor shall have a time rating of 15 minutes, 30 minutes, or 60 minutes. When operated at rated horsepower, speed, and time, the temperature rise of the motor shall be in accordance with 18.436.

18.429.2 Class DL

A Class DL direct-current elevator motor shall have a time rating of 60 minutes. When operated at rated horsepower, speed, and time, the temperature rise of the motor shall be in accordance with 18.436.

NOTE—When the elevator duty cycle permits a Class DL direct-current elevator motor may have a time rating of 30 minutes.

18.430 NAMEPLATE MARKINGS

See 10.66.

TESTS AND PERFORMANCE

18.431 ACCELERATION AND DECELERATION CAPACITY

Class DH or DL direct-current elevator motors shall be capable of carrying successfully at least 200 percent of rated armature current for a period not to exceed 3 seconds at any voltage up to 70 percent of rated armature voltage and a momentary load of at least 230 percent of rated armature current within the same voltage range.

18.432 VARIATION IN SPEED DUE TO LOAD

18.432.1 Class DH

When Class DH direct-current elevator motors (see 18.428) are operated at rated voltage, the variation in speed

Copyright National Electrical Manufacturers Association
Provided by IHS under license with NEMA
No reproduction or networking permitted without license from IHS

Not for Resale

from full-load to no-load hot, based upon full-load speed hot with constant field current maintained, shall not exceed 10 percent.

18.432.2 Class DL

When Class DL direct-current elevator motors are operated at rated voltage, the varation in speed from full-load to no-load hot, based upon full-load speed hot with constant field current maintained, shall not exceed 20 percent.

18.433 VARIATION FROM RATED SPEED

When Class DH or Class DL direct-current elevator motors (see 18.428) are operated at rated armature and field voltage and load, the actual full-load speed hot shall not vary by more than plus or minus 7.5 percent from rated speed.

18.434 VARIATION IN SPEED DUE TO HEATING

18.434.1 Open-Loop Control Sytem

When a Class DH or Class DL direct-current elevator motor is intended for use in an open-loop elevator control system and is operated at rated armature and field voltage and load, the variation in speed from full-load cold to full-load hot during a run of a specified duration shall not exceed 10 percent of the full-load speed hot.

18.434.2 Closed-Loop Control System

When a Class DH or Class DL direct-current elevator motor is intended for use in a closed-loop elevator control system and is operated at rated armature and field voltage and load, the variation in speed from full-load cold to full-load hot during a run of a specified duration shall not exceed 15 percent of the full-load speed hot.

18.435 HIGH-POTENTIAL TEST

See 3.01 and 12.03.

18.436 TEMPERATURE RISE

The temperature rise, above the temperature of the cooling medium, for each of the various parts of Class DH and Class DL direct-current elevator motors, when tested in accordance with the rating, shall not exceed the values given in the following table. All temperature rises are based on a maximum ambient temperature of 40°C. Temperatures shall be determined in accordance with IEEE Std 113.

Time Rating	15 minutes		30 and 60 minutes	
Class of Insulation*	A	B	A	B
Load, Percent of Rated Capacity	100	100	100	100
Temperature Rise, † Degrees C				
a. Armature windings and all other windings other than those given in items b and c—resistance	80	115	70	100
b. Multi-layer filed windings—resistance	80	115	70	100
c. Single-layer field windings with exposed uninsulated surfaces and bare copper windings—resistance	80	115	70	100
d. The temperature attained by cores, communators, and miscellaneous parts (such as brushholders, brushes, pole tips, etc.) shall not injure the insulation or the machine in any respect.				

*See 1.66 for description of classes of insulation.

Copyright National Electrical Manufacturers Association
Provided by IHS under license with NEMA
No reproduction or networking permitted without license from IHS
Not for Resale

MOTOR-GENERATOR SETS FOR DC ELEVATOR MOTORS

(A motor-generator set consisting of an open-type induction motor direct-connected to an open-type direct-current adjustable-voltage generator for supplying power to a direct-current elevator motor.)

RATINGS

18.451 BASIS OF RATING

18.451.1 The induction motor and the direct-current adjustable-voltage generator shall each have a continuous time rating.

18.451.2 The kilowatt rating of the direct-current adjustable-voltage generator and the horsepower rating of the induction motor do not necessarily bear any definite relation to the rating of the direct-current elevator motor to which they furnish power because of the difference in time rating.

18.452 GENERATOR VOLTAGE RATINGS

18.452.1 The direct-current adjustable-voltage generator shall be capable to producing the rated voltage of the direct-current elevator motor to which it is supplying power.

18.452.2 Since the direct-current elevator motor and the direct-current adjustable-voltage generator are rated on different bases, the generator rated voltage may be less than that of the direct-current elevator motor. Usually the highest rated voltage of the generator should not exceed 600 volts. Whenever possible, it is recommended that the rated voltage of the generator be 250 volts.

TESTS AND PERFORMANCE

18.453 VARIATION IN VOLTAGE DUE TO HEATING

18.453.1 Open-Loop Control System

When an elevator direct-current adjustable-voltage generator is intended for use in an open-loop control system, the change in armature voltage from full-load cold to full-load hot, with a fixed voltage applied to the generator field, shall not exceed 10 percent.

18.453.2 Closed-Loop Control System

When an elevator direct-current adjustable-voltage generator is intended for use in a closed-loop control system, the change in armature voltage from full-load cold to full-load hot, with a fixed voltage applied to the generator field, shall not exceed 15 percent.

18.454 OVERLOAD

Both the induction motor and the direct-current adjustable-voltage generator shall be capable of supplying the peak load required for the direct-current elevator motor to which it is supplying power. See 18.43.1.

18.455 HIGH-POTENTIAL TEST

The various parts of the set shall be given high-potential tests in accordance with 3.01 for single-phase and polyphase induction motors and in accordance with 15.48 for direct-current generators.

18.456 VARIATION FROM RATED VOLTAGE

All sets shall operate successfully at rated load and frequency with the motor voltage not more than 10 percent above or below the nameplate rating but not necessarily in accordance with the standards established for operation at normal rating.

18.457 VARIATION FROM RATED FREQUENCY

All sets shall operate successfully at rated load and voltage with the motor frequency not more than 5 percent above or below the nameplate rating but not necessarily in accordance with the standards established for operation at normal rating.

18.458 COMBINED VARIATION OF VOLTAGE AND FREQUENCY

All sets shall operate successfully at rated load with a combined variation in motor voltage and frequency not more than 10 percent above or below the nameplate rating, provided the limits of variations given in 18.456 and 18.457 are not exceeded, but not necessarily in accordance with the standards established for operation at normal rating.

18.459 TEMPERATURE RISE

The temperature rise, above the temperature of the cooling medium, for each of the various parts of each machine in the set, when tested in accordance with their ratings, shall not exceed the following values.

Copyright National Electrical Manufacturers Association
Provided by IHS under license with NEMA
No reproduction or networking permitted without license from IHS

Not for Resale

18.459.1 Induction Motors

See 12.43.

18.459.2 Direct-Current Adjustable-Voltage Generators

Class of Insulation*	A	B
Load, Percent of Rated Capacity	100	100
Time Rating—Continuous		
Temperature Rise, **Degrees C		
a. Armature windings and all other windings other than those given in items b and c—resistance	70	100
b. Multi-layer field windings—resistance	70	100
c. Single-layer field windings with exposed uninsulated surfaces and bare copper windings—resistance	70	100
d. The temperature attained by cores, commutators, and miscellaneous parts (such as brushholders, brushers, pole tips, etc.) shall not injure the insulation or the machine in any respect.		

*See 1.66 for description of classes of insulation.

**All temperature rises are based on a maximum ambient temperature of 40°C. Temperatures shall be determined in accordance with IEEE Std 113. Abnormal deterioration of insulation may be expected if this ambient temperature is exceeded in regular operation.

Copyright National Electrical Manufacturers Association
Provided by IHS under license with NEMA
No reproduction or networking permitted without license from IHS

Not for Resale

MEDIUM AC POLYPHASE ELEVATOR MOTORS

18.476 CLASSIFICATION ACCORDING TO ELECTRICAL TYPE

Polyphase alternating-current high-speed motors, Class AH, for use with gear-driven elevators shall include:

18.476.1 AH1

All single-speed internal-resistance-type elevator motors having a squirrel-cage secondary or other form of secondary winding having no external connection and designed for only one synchronous speed.

18.476.2 AH2

All single-speed external-resistance-type elevator motors having a wound secondary with means for connection to an external starting resistance and designed for only one synchronous speed.

18.476.3 AH3

All multispeed internal-resistance-type elevator motors having a squirrel-cage secondary or other forms of secondary winding having no external connection and designed to give two or more synchronous speeds.

RATINGS

18.477 BASIS OF RATING—ELEVATOR MOTORS

Squirrel-cage elevator motors shall be rated primarily on the basis of locked-rotor torque, but they may also be given a horsepower rating. The horsepower ratings shall be those ratings given under 18.480 and shall be the brake-horsepower the motor will actually develop without exceeding the standard temperature rise for the standard time rating as given in 18.482.

18.478 VOLTAGE RATINGS

The voltage ratings shall be:

a. Class AH1 motors, 1 horsepower to 10 horsepower, inclusive, at 1200 and 1800 rpm—115 volts
b. Class AH1 motors other than those covered in item a, Class AH2 motors, and Class AH3 motors—200, 230, 460, and 575 volts

18.479 FREQUENCY

The frequency shall be 60 hertz.

18.480 HORSEPOWER AND SPEED RATINGS

Horsepower and synchronous speed ratings of open-type Class AH1 squirrel-cage motors for elevators and similar applications shall be as given in the following table.

60 HERTZ, TWO- AND THREE-PHASE					
Hp	Synchronous Speed, Rpm				
1	1800	1200	...	...	...
2	1800	1200	...	...	...
3	1800	1200	...	...	...
5	1800	1200	900	...	...
7½	1800	1200	900	720	...
10	1800	1200	900	720	600
15	1800	1200	900	720	600
20	1800	1200	900	720	600
25	1800	1200	900	720	600
30	...	...	900	720	600
40	...	...	900	720	600

TESTS AND PERFORMANCE

18.481 LOCKED-ROTOR TORQUE FOR SINGLE-SPEED SQUIRREL-CAGE ELEVATOR MOTORS

The locked-rotor torque for Class AH1 elevator motors, with rated voltage and frequency applied, shall be not less than 285 percent of rated synchronous torque.

For the selection of gearing and other mechanical design features of the elevator, 335 percent of rated synchronous torque shall be used as a maximum value of locked-rotor torque for Class AH1 elevator motors.

18.482 TIME-TEMPERATURE RATING

The rated horsepower or torque of elevator motors under Class AH1 shall be based on a 30-minute run at rated horsepower or rated torque and corresponding speed with a temperature rise not to exceed the values given in 12.43.

18.483 HIGH-POTENTIAL TEST

See 3.01 and 12.03.

18.484 VARIATIONS FROM RATED VOLTAGE AND RATED FREQUENCY

See 12.44.

Copyright National Electrical Manufacturers Association
Provided by IHS under license with NEMA
No reproduction or networking permitted without license from IHS

Not for Resale

MANUFACTURING

18.487 NAMEPLATE MARKING

The following minimum amount of information shall be given on the nameplates of all squirrel-cage high-torque elevator motors. For abbreviations, see 1.80.

a. Manufacturer's type designation (optional)
b. Horsepower rating
c. Time rating
d. Temperature rise
e. Rpm at full load
f. Starting torque (pounds at 1 foot)
g. Frequency
h. Number of phases
i. Voltage
j. Full-load amperes
k. Code letter for locked-rotor kVA (see 10.37)

Copyright National Electrical Manufacturers Association
Provided by IHS under license with NEMA
No reproduction or networking permitted without license from IHS

Not for Resale

MEDIUM AC CRANE MOTORS

RATINGS

18.501 VOLTAGE RATINGS

Voltage ratings shall be:

Hp	Voltage Ratings, Volts
	60 Hertz
1–10, incl.	115, 200, 230, 460, and 575
15–125, incl.	200, 230, 460, and 575
150	460 and 575
	50 Hertz
1–125, incl.	220 and 380
150	380

18.502 FREQUENCIES

Frequencies shall be 50 and 60 hertz.

18.503 HORSEPOWER AND SPEED RATINGS

Horsepower and speed ratings for intermittent-rated alternating-current wound-rotor crane motors shall be:

Hertz	60	60	60	60	60	50	50	50	50	50
Ratings Hp	Synchronous Speed, Rpm									
1	1800	1200	...	...	...	1500	1000	...	...	...
1½	1800	1200	...	...	...	1500	1000	...	...	...
2	1800	1200	900	...	...	1500	1000	750	...	...
3	1800	1200	900	...	...	1500	1000	750	...	...
5	1800	1200	900	...	...	1500	1000	750	...	...
7½	1800	1200	900	...	...	1500	1000	750	...	...
10	1800	1200	900	...	...	1500	1000	750	...	...
15	1800	1200	900	...	...	1500	1000	750	...	...
20	1800	1200	900	720	...	1500	1000	750	600	...
25	1800	1200	900	720	...	1500	1000	750	600	...
30	1800	1200	900	720	...	1500	1000	750	600	...
40	1800	1200	900	720	600	1500	1000	750	600	500
50	1800	1200	900	720	600	1500	1000	750	600	500
60	1800	1200	900	720	600	1500	1000	750	600	500
75	1800	1200	900	720	600	1500	1000	750	600	500
100	1800	1200	900	720	600	1500	1000	750	600	500
125	1800	1200	...	720	600	1500	1000	...	600	500
150	1800	...	...	...	600	1500	...	...	...	500

Copyright National Electrical Manufacturers Association
Provided by IHS under license with NEMA
No reproduction or networking permitted without license from IHS

Not for Resale

18.504 SECONDARY DATA FOR WOUND-ROTOR CRANE MOTORS

Hp Rating	Secondary Volts*	Maximum Secondary Amperes	External Resistance,** Ohms	Hp Rating	Secondary Volts*	Maximum Secondary Amperes	External Resistance,** Ohms
1	90	6	7	25	220	60	1.75
1½	110	7.3	7	30	240	65	1.75
2	120	8.4	7	40	315	60	2.75
3	145	10	7	50	350	67	2.75
5	140	19	3.5	60	375	74	2.75
7½	165	23	3.5	75	385	90	2.30
10	195	26.5	3.5	100	360	130	1.50
15	240	32.5	3.5	125	385	150	1.40
20	265	38	3.5	150	380	185	1.10

*Tolerance plus or minus 10 percent
**Tolerance plus or minus 5 percent
NOTE—100 percent external ohms is the resistance per leg in a 3-phase wye-connected bank of resistance which will limit the motor locked-rotor torque to 100 percent.

18.505 NAMEPLATE MARKING

The following minimum amount of information shall be given on all nameplates. For abbreviations, see 1.80.

a. Manufacturer's type and frame designation
b. Horsepower output
c. Time rating
d. Class of insulation system and maximum ambient temperature for which motor is designed (see Note 1 of 12.43)
e. Rpm at full load
f. Frequency
g. Number of phases
h. Voltage
i. Full-load primary amperes
j. Secondary amperes at full load
k. Secondary open-circuit voltage

18.506 FRAME SIZES FOR TWO- AND THREE-PHASE 60-HERTZ OPEN AND TOTALLY ENCLOSED WOUND-ROTOR CRANE MOTORS HAVING CLASS B INSULATION SYSTEMS

Hp Rating	Time Rating, Enclosure	Synchronous Speed, Rpm		
		1800	1200	900
		Frame Designation*		
10	30 minutes, open	256X	284X	286X
15		284X	286X	324X
20	30 minutes, totally enclosed	286X	324X	326X
25		324X	326X	364X
30		326X	364X	364X
40		364X	364X	365X
50	60 minutes, open	364X	365X	404X
60		365X	404X	405X
75	30 minuted, totally enclosed	404X	405X	444X
100		405X	444X	445X
125		444X	445X	...
150		445X	...	...

*Dimensions for these frame designations are given in 18.520.

Copyright National Electrical Manufacturers Association
Provided by IHS under license with NEMA
No reproduction or networking permitted without license from IHS
Not for Resale

NEMA MG*1 93 6470247 0506787 368

TESTS AND PERFORMANCE

18.507 TIME RATINGS

The time ratings for open and totally enclosed alternating-current wound-rotor motors shall be 15, 30, and 60 minutes.

18.508 TEMPERATURE RISE

For temperature rise of Class B insulation system, see 12.43.

18.509 BREAKDOWN TORQUE

18.509.1 The breakdown torque for alternating-current wound-rotor crane motors, with rated voltage and frequency applied, shall be not less than 275 percent of full-load torque.

18.509.2 For the selection of gearing and other mechanical design features of the crane, 375 percent of rated full-load torque shall be used as the maximum value of breakdown torque for an alternating-current would-rotor crane motor.

18.510 HIGH-POTENTIAL TEST

See 3.01 and 12.03.

18.511 OVERSPEEDS

Alternating-current wound-rotor crane motors having standard horsepower and speed ratings and built in frame sizes given in 18.506 shall be so constructed that they will withstand, without mechanical injury, an overspeed which is 50 percent above synchronous speed.

18.512 PLUGGING

Alternating-current wound-rotor crane motors shall be designed to withstand reversal of the phase rotation of the power supply at rated voltage when running at the overspeed given in 18.51.1.

18.513 VARIATIONS FROM RATED VOLTAGE AND RATED FREQUENCY

See 12.44.

18.514 ROUTINE TESTS

The routine tests shall be:

a. No-load readings of current and speed at normal voltage and frequency and with collector rings short-circuited. On 50-hertz motors, these readings shall be permitted to be taken at 60 hertz if 50 hertz is not available.
b. Measurement of open-circuit voltage ratio
c. High-potential test in accordance with 3.01 and 12.03

18.515 BALANCE OF MOTORS ▲

See MG 1, Part 7.

18.516 BEARINGS

Bearings for wound-rotor crane motors shall be of the antifriction type.

Copyright National Electrical Manufacturers Association
Provided by IHS under license with NEMA
No reproduction or networking permitted without license from IHS
Not for Resale

18.519 DIMENSIONS FOR ALTERNATING-CURRENT WOUND-ROTOR OPEN AND TOTALLY ENCLOSED CRANE MOTORS[1]

See Figure 18-32.

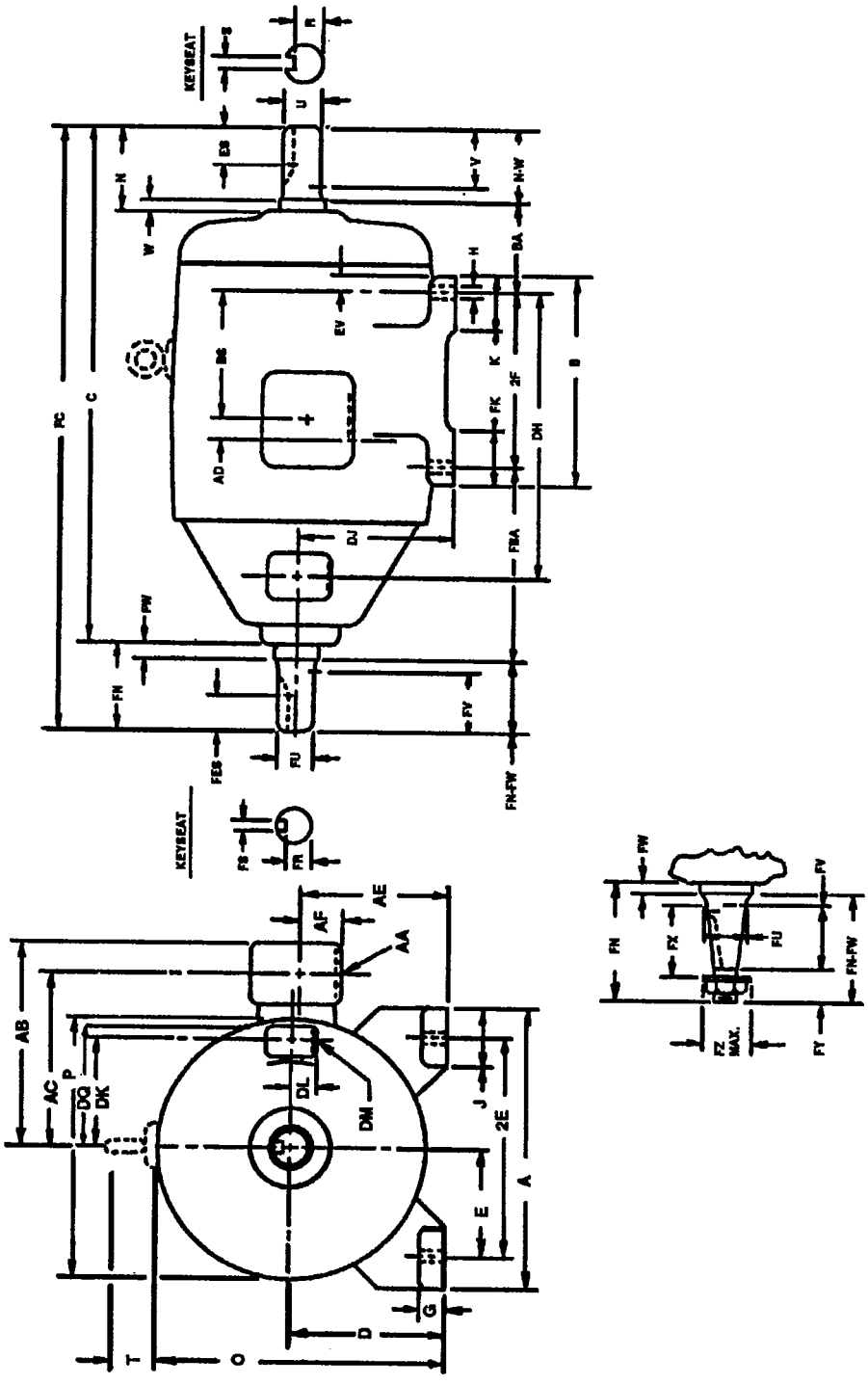

Figure 18-32
DIMENSIONS FOR OPEN AND TOTALLY ENCLOSED CRANE MOTORS

[1]See 18.520 for shaft style at end opposite drive.

Copyright National Electrical Manufacturers Association
Provided by IHS under license with NEMA
No reproduction or networking permitted without license from IHS

Not for Resale

18.520 DIMENSIONS AND TOLERANCES FOR ALTERNATING-CURRENT OPEN AND TOTALLY ENCLOSED WOUND-ROTOR CRANCE MOTORS HAVING ANTIFRICITON BEARINGS[1]

Frame Designation	A Max	D*	E**	2F**	AA Min	BA	H**
254X	12.50	6.25	5.00	8.25	1	4.25	0.53
256X	12.50	6.25	5.00	10.00	1	4.25	0.53
284X	14.00	7.00	5.50	9.50	1-1/4	4.75	0.53
286X	14.00	7.00	5.50	11.00	1-1/4	4.75	0.53
324X	16.00	8.00	6.25	10.50	1-1/2	5.25	0.66
326X	16.00	8.00	6.25	12.00	1-1/2	5.25	0.66
364X	18.00	9.00	7.00	11.25	2	5.88	0.66
365X	18.00	9.00	7.00	12.25	2	5.88	0.66
404X	20.00	10.00	8.00	12.25	2	6.62	0.81
405X	20.00	10.00	8.00	13.75	2	6.62	0.81
444X	22.00	11.00	9.00	14.50	2-1/2	7.50	0.81
445X	22.00	11.00	9.00	16.50	2-1/2	7.50	0.81

	Drive End—Straight Shaft Extension†					
				Keyseat††		
Frame Designation	U	N-W	V Min	R	ES Min	S
254X	1.3750	3.75	3.50	1.201	2.78	0.312
256X	1.3750	3.75	3.50	1.201	2.78	0.312
284X	1.625	3.75	3.50	1.416	2.53	0.375
286X	1.625	3.75	3.50	1.416	2.53	0.375
324X	1.875	3.75	3.50	1.591	2.41	0.500
326X	1.875	3.75	3.50	1.591	2.41	0.500
364X	2.375	4.75	4.50	2.021	3.03	0.625
365X	2.375	4.75	4.50	2.021	3.03	0.625
404X	2.875	5.75	5.50	2.450	3.78	0.750
405X	2.875	5.75	5.50	2.450	3.78	0.750
444X	3.375	5.50	5.25	2.880	4.03	0.875
445X	3.375	5.50	5.25	2.880	4.03	0.875

		Opposite Drive End—Shaft Extension†									
									Keyseat▲		
Frame Designation	Shaft Style	FU	FN-FW	FV††	FX	FY	FZ Max	Shaft, Threaded	Width	Depth	Length▲
254X	Straight	1.1250	3.00	2.75	...	...	...	...	0.250	0.125	2.41
256X	Straight	1.1250	3.00	2.75	...	...	...	...	0.250	0.125	2.41
284X	Tapered	1.3750	4.12	2.62	2.75	1.25	2.00	1–12	0.312	0.156	2.25
286X	Tapered	1.3750	4.12	2.62	2.75	1.25	2.00	1–12	0.312	0.156	2.25
324X	Tapered▲▲	1.625	4.50	2.88	3.00	1.25	2.00	1–12	0.375	0.188	2.50
326X	Tapered▲▲	1.625	4.50	2.88	3.00	1.25	2.00	1–12	0.375	0.188	2.50
364X	Tapered▲▲	2.125	4.88	3.50	3.62	1.38	2.75	1-1/2–8	0.500	0.250	3.25
365X	Tapered▲▲	2.125	4.88	3.50	3.62	1.38	2.75	1-1/2–8	0.500	0.250	3.25
404X	Tapered▲▲	2.375	5.25	3.75	3.88	1.50	3.25	1-3/4–8	0.625	0.312	3.50
405X	Tapered▲▲	2.375	5.25	3.75	3.88	1.50	3.25	1-3/4–8	0.625	0.312	3.50
444X	Tapered▲▲	2.625	5.88	4.12	4.25	1.75	3.62	2–8	0.625	0.312	3.88
445X	Tapered▲▲	2.625	5.88	4.12	4.25	1.75	3.62	2–8	0.625	0.312	3.88

(See next page for notes.)

[1]For meaning of letter dimensions, see 4.01 and 18.519.

Copyright National Electrical Manufacturers Association
Provided by IHS under license with NEMA
No reproduction or networking permitted without license from IHS

Not for Resale

All dimensions in inches.

*Dimension D will never be greater than the above values, but it may be less such that shims are usually required for coupled or geared machines. When the exact dimension is required, shims up to 0.03 inch may be necessary.

**The tolerance for the E and 2F dimensions shall be ±0.03 inch and for the H dimension shall be +0.05 inch, -0 inch.

†For tolerances on shaft extensions and keyseats, see 4.05.

††For straight shafts, this is a minimum dimension.

▲The tolerance on the length of the key is ±0.03 inch.

▲▲The standard taper of shafts shall be at the rated of 1.25 inches in diameter per foot of length. The thread at the end of the tapered shaft shall be provided with a nut and a suitable locking device.

NOTE—It is recommended that all motors with keyseats cut in the shaft extension for pulley, coupling, pinion, etc., be furnished with a key unless otherwise specified by the purchaser.

Copyright National Electrical Manufacturers Association
Provided by IHS under license with NEMA
No reproduction or networking permitted without license from IHS
Not for Resale

MEDIUM SHELL-TYPE MOTORS FOR WOODWORKING AND MACHINE-TOOL APPLICATIONS

18.526 DEFINITION OF SHELL-TYPE MOTOR

A shell-type motor consists of a stator and rotor without shaft, end shields, bearings, or conventional frame. Separate fans or fans larger than the rotor are not included.

18.527 TEMPERATURE RISE—SHELL-TYPE MOTOR

The temperature rise of a shell-type motor depends on the design of the ventilating system as well as on the motor losses. The motor manufacturer's responsibility is limited to (a) supplying motors with losses, characteristics, current densities, and flux densities consistent with complete motors of similar ratings, size, and proportion, and (b) when requested, supplying information regarding the design of a ventilating system which will dissipate the losses within the rated temperature rise.

Therefore, obviously, the machine manufacturer is ultimately responsible for the temperature rise.

18.528 TEMPERATURE RISE FOR 60-HERTZ SHELL-TYPE MOTORS OPERATED ON 50 HERTZ

When 40°C continuous 60-hertz single-speed shell-type motors are designed as suitable for operation on 50-hertz circuits at the 60-hertz voltage and horsepower rating, they will operate without injurious heating if the ventilation system is in accordance with the motor manufacturers' recommendations.

18.529 OPERATION AT OTHER FREQUENCIES—SHELL-TYPE MOTORS

All two-pole 40°C continuous 60-hertz shell-type motors shall be capable of operating on proportionally increased voltage at frequencies up to and including 120 hertz. The horsepower load shall be permitted to be increased in proportion to one half of the increased speed.

18.530 RATINGS AND DIMENSIONS FOR SHELL-TYPE MOTORS[1]

18.530.1 Rotor Bore and Keyway Dimensions, Three-Phase 60-Hertz 40°C Open Motors, 208, 220, 440, and 550 Volts

18.530.1.1 STRAIGHT ROTOR BORE MOTORS

Hp Rating	Rotor Bores			Rotor Keyways	
Two Pole	Normal Diameter Inches	Maximum Diameter Inches	Minimum Diameter, Inches	Bores, Inches	Keys, Inches
			BH = 8-Inch Diameter		
1½ to 10	1½	2	None	1½ to 1¾, incl. 2	⅜ × ³⁄₁₆ ½ × ¼
			BH = 10-Inch Diameter		
7½ to 20	1⅞	2⅜–4-, 6-, & 8-pole motors*	None	1⅞	⅜ × ³⁄₁₆
		2⅛–2-pole motors	None	2 to 2⅜, incl.	½ × ¼
			BH = 12.375-Inch Diameter		
15 to 25	2¼	2¾		2¼ to 2½, incl. 2¾	½ × ¼ ¾ × ⅜

*All other 4-, 6-, and 8-pole hp ratings will have same rotor bore as 2-pole ratings by frame size.

[1]See 18.531.

Copyright National Electrical Manufacturers Association
Provided by IHS under license with NEMA
No reproduction or networking permitted without license from IHS
Not for Resale

18.530.1.2 TAPERED ROTOR BORES*

BH Dimension	Range of Bore on Big End
8	1.75 to 2 inches—For all pole combinations
10	2.125 to 2.375 inches—For 4, 6, and 8 poles
	2.125 to 2.25 inches—For 2 poles
12.375	2.5 to 2.75 inches—For all pole combinations

*All rotor bore dimensions are based on the use of magnetic shaft material.

The small-end diameter will be whatever comes depending on length of rotor using ¼ inch taper per foot.

18.530.2 BH and BJ Dimensions in Inches, Open Type Three-Phase 60-Hertz 40°C Continuous, 208, 220, 440, and 550 Volts

Horsepower				BJ Maximum		
Poles				Poles		
2	4	6	8	2	4	6 and 8
BH = 8-Inch Diameter						
1½	1	¾	...	6¾	6¾	6⅛
2	1½	1	½	7½	7⅛	6⅞
3	2	1½	¾	8	7⅝	7⅜
5	3	2	1	9⅜	9	8¾
7½	5	3	1½	11½	11⅛	10⅞
10	...	...	...	13½	...	...
BH = 10-Inch Diameter						
7½	5	3	2	9½	9	8⅝
10	7½	5	3	11	10½	10⅛
15	10	7½	5	12¾	12¼	11⅞
20	15	10	7½	14½	14	13⅝
BH = 12.375-Inch Diameter						
15	10	7½	½	11	10⅜	9⅞
20	15	10	7½	12¼	11⅝	11⅛
25	20	15	10	13½	12⅞	12⅜

$$\text{Maximum BK} = \frac{\text{Maximum BJ}}{2} + ¼$$

Copyright National Electrical Manufacturers Association
Provided by IHS under license with NEMA
No reproduction or networking permitted without license from IHS

Not for Resale

18.531 LETTERING FOR DIMENSION SHEETS FOR SHELL-TYPE MOTORS[1]

See Figure 18-33.

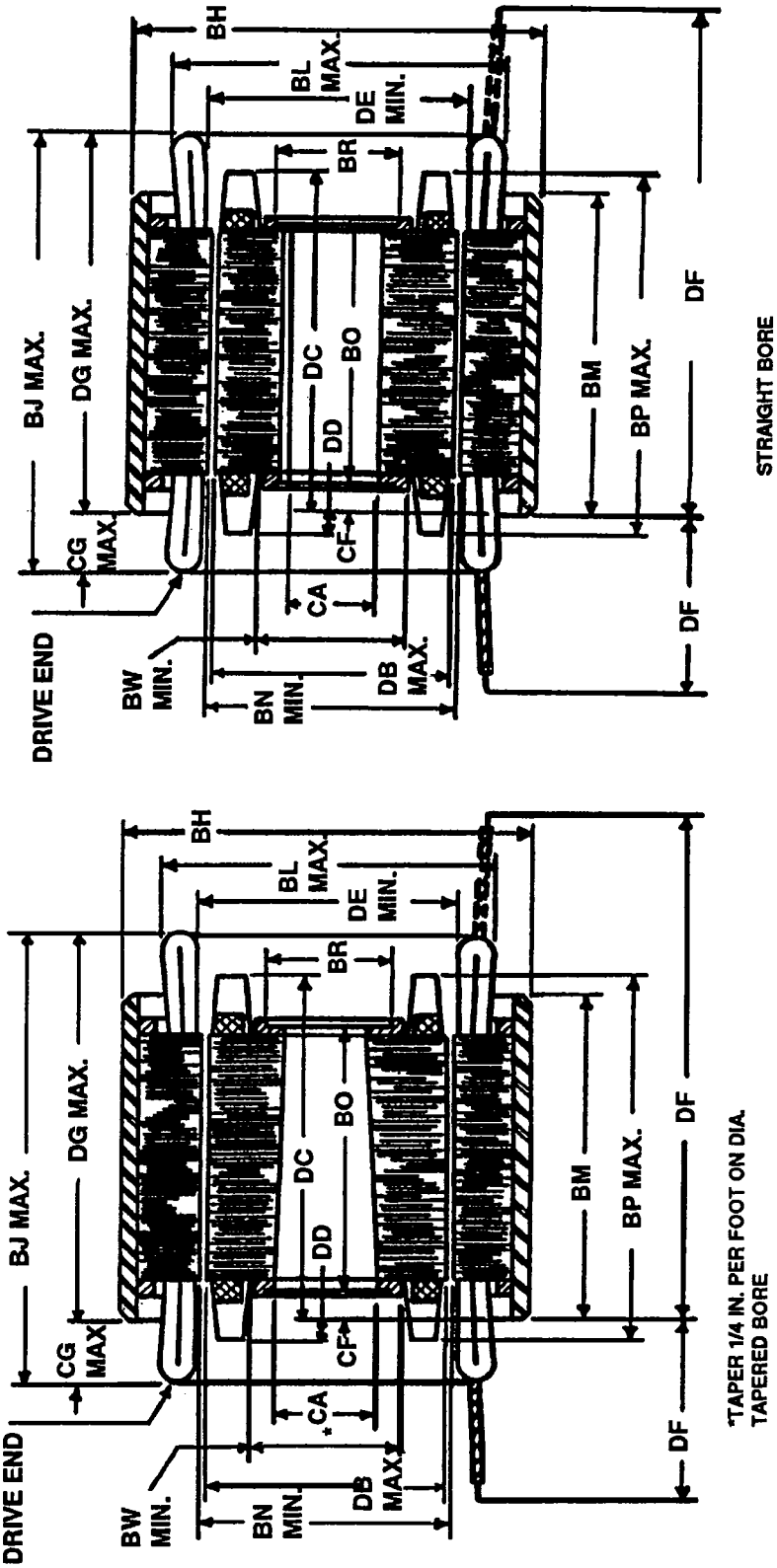

Figure 18-33
DIMENSION SHEET LETTERING

[1]For the meaning of letter dimensions, see 4.01.

Copyright National Electrical Manufacturers Association
Provided by IHS under license with NEMA
No reproduction or networking permitted without license from IHS

Not for Resale

MEDIUM AC SQUIRREL-CAGE INDUCTION MOTORS FOR VERTICAL TURBINE PUMP APPLICATIONS

(These standards were developed jointly with the Hydraulic Institute.)

18.590 DIMENSION FOR TYPE VP VERTICAL SOLID-SHAFT, SINGLE-PHASE AND POLYPHASE, DIRECT CONNECTED SQUIRREL-CAGE INDUCTION MOTORS FOR VERTICAL TURBINE PUMP APPLICATIONS[1,2,3,4]

					BF Clearance Hole	
Frame Designations*	AJ**	AK	BB Min	BD Max	Number	Size
143VP and 145VP	9.125	8.250	0.19	10.00	4	0.44
182VP and 184VP	9.125	8.250	0.19	10.00	4	0.44
213VP and 215VP	9.125	8.250	0.19	10.00	4	0.44
254VP and 256VP	9.125	8.250	0.19	10.00	4	0.44
284VP and 286VP	9.125	8.250	0.19	10.00	4	0.44
324VP and 326VP	14.750	13.500	0.25	16.50	4	0.69
364VP and 365VP	14.750	13.500	0.25	16.50	4	0.69
404VP and 405VP	14.750	13.500	0.25	16.50	4	0.69
444VP and 445VP	14.750	13.500	0.25	16.50	4	0.69

				Keyseat			
Frame Designations*	U	V Min	AH†	R	ES Min	S	EU
143VP and 145VP	0.8750	2.75	2.75	0.771–0.756	1.28	0.190–0.188	0.6875
182VP and 184VP	1.1250	2.75	2.75	0.986–0.971	1.28	0.252–0.250	0.8750
213VP and 215VP	1.1250	2.75	2.75	0.986–0.971	1.28	0.252–0.250	0.8750
254VP and 256VP	1.1250	2.75	2.75	0.986–0.971	1.28	0.252–0.250	0.8750
284VP and 286VP	1.1250	2.75	2.75	0.986–0.971	1.28	0.252–0.250	0.8750
324VP and 326VP	1.625	4.50	4.50	1.416–1.401	3.03	0.377–0.375	1.2500
364VP and 365VP	1.625	4.50	4.50	1.416–1.401	3.03	0.377–0.375	1.2500
404VP and 405VP	1.625	4.50	4.50	1.416–1.401	3.03	0.377–0.375	1.2500
444VP and 445VP	2.125	4.50	4.50	1.845–1.830	3.03	0.502–0.500	1.7500

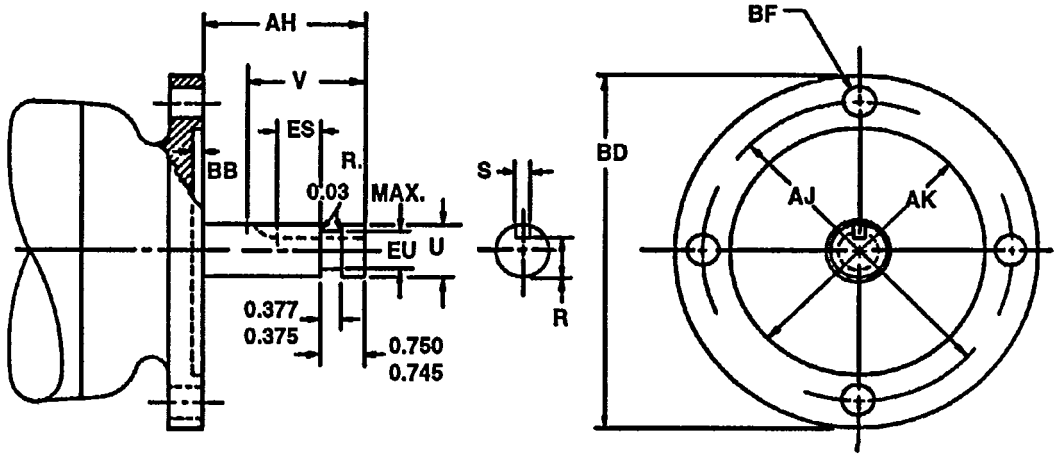

All dimensions in inches.

*The assignment of horsepower and speed ratings to these frames shall be in accordance with NEMA Standards Publication No. MG 13, except for the inclusion of the suffix letters VP in place of the suffix letters T and TS.

**AJ dimension—centerline of bolt holes shall be within 0.025 inch of true location. True location is defined as angular and diametrical location with reference to the centerline of the AK dimension.

†The tolerance on the AH dimension shall be ±0.06 inch. Dimension AH shall be measured with motor in vertical position, shaft down.

Figure 18-34
DIMENSIONS FOR MOTORS FOR VERTICAL TURBINE PUMP APPLICATIONS

[1]The tolerance for the permissible shaft runout shall be 0.002-inch indicator reading (see 4.07).

[2]For the meaning of the letter dimensions, see 4.01.

[3]For tolerance on AK dimension, face runout, and permissible eccentricity of mounting rabbet, see 4.09.

[4]For tolerance on shaft extension diameters and keyseats, see 4.05 and 4.06.

Copyright National Electrical Manufacturers Association
Provided by IHS under license with NEMA
No reproduction or networking permitted without license from IHS
Not for Resale

18.591 DIMENSIONS FOR TYPE P AND PH ALTERNATING-CURRENT SQUIRREL-CAGE VERTICAL HOLLOW-SHAFT MOTORS FOR VERTICAL TURBINE PUMP APPLICATONS[1,2]

18.591.1 Base Dimensions

Item*	Frame Designation	AJ**	AK	BB Min	BD Max	BF Clearance	BF Tap Size	BF Number	EO Min
1	182TP	9.125	8.250	0.19	10.00	0.44	...	4	2.50
2	184TP	9.125	8.250	0.19	10.00	0.44	...	4	2.50
3	213TP	9.125	8.250	0.19	10.00	0.44	...	4	2.50
4	215TP	9.125	8.250	0.19	10.00	0.44	...	4	2.50
5	254TP	9.125	8.250	0.19	10.00	0.44	...	4	2.75
6	256TP	9.125	8.250	0.19	10.00	0.44	...	4	2.75
7	284TP†	9.125	8.250	0.19	10.00	0.44	...	4	2.75
8	286TP†	9.125	8.250	0.19	10.00	0.44	...	4	2.75
9	324TP†	14.750	13.500	0.25	16.50	0.69	...	4	4.00
10	326TP†	14.750	13.500	0.25	16.50	0.69	...	4	4.00
11	364TP†	14.750	13.500	0.25	16.50	0.69	...	4	4.00
12	365TP	14.750	13.500	0.25	16.50	0.69	...	4	4.00
13	404TP	14.750	13.500	0.25	16.50	0.69	...	4	4.50
14	405TP	14.750	13.500	0.25	16.50	0.69	...	4	4.50
15	444TP	14.750	13.500	0.25	16.50	0.69	...	4	5.00
16	445TP	14.750	13.500	0.25	16.50	0.69	...	4	5.00
17	...	14.750	13.500	0.25	20.00	0.69	...	4	...
18	...	14.750	13.500	0.25	24.50	0.69††	5/8-11	4	...
19	...	26.000	22.000	0.25	30.50	0.81††	3/4-10	4	...

All dimensions in inches.
*See 18.591.2 for the coupling dimensions of the motors covered in items 1 through 16.
†These frames have the following alternative base dimensions, the coupling dimensions given in 18.591.2 remaining unchanged:

Frame Designations	Base Dimensions AJ**	AK	BB Min	BD Max	BF Clearance	BF Tap Size	BF Number	EO Min
324TPH	9.125	8.250	0.19	12.00	0.44	...	4	4.00
326TPH	9.125	8.250	0.19	12.00	0.44	...	4	4.00
284TPH	14.750	13.500	0.25	16.50	0.69	...	4	2.75
286TPH	14.750	13.500	0.25	16.50	0.69	...	4	2.75

**AJ dimension—centerline of bolt holes shall be within 0.025 inch of true location. True location is defined as angular and diametrical location with reference to the centerline of the AK dimension.
††Either clearance hole or tap size shall be specified.

[1]For the meaning of the letter dimensions, see 4.01 and Figure 4-5.

[2]For tolerances on AK dimension, face runout, and permissible eccentricity of mounting rabbet, see 4.09.

Copyright National Electrical Manufacturers Association
Provided by IHS under license with NEMA
No reproduction or networking permitted without license from IHS
Not for Resale

18.591.2 Coupling Dimensions[1]

	Coupling Dimensions									
	Standard Bore					Maximum Bore				
Item*	BX**	EW	R	BY	BZ	BX**	EW	R	BY	BZ
1	0.751	0.188–0.190	0.837–0.847	10–32	1.375	1.001	0.250–0.252	1.114–1.124	10–32	1.375
2	0.751	0.188–0.190	0.837–0.847	10–32	1.375	1.001	0.250–0.252	1.114–1.124	10–32	1.375
3	0.751	0.188–0.190	0.837–0.847	10–32	1.375	1.001	0.250–0.252	1.114–1.124	10–32	1.375
4	0.751	0.188–0.190	0.837–0.847	10–32	1.375	1.001	0.250–0.252	1.114–1.124	10–32	1.375
5	1.001	0.250–0.252	1.114–1.124	10–32	1.375	1.251	0.250–0.252	1.367–1.377	1/4–20	1.750
6	1.001	0.250–0.252	1.114–1.124	10–32	1.375	1.251	0.250–0.252	1.367–1.377	1/4–20	1.750
7	1.001	0.250–0.252	1.114–1.124	10–32	1.375	1.251	0.250–0.252	1.367–1.377	1/4–20	1.750
8	1.001	0.250–0.252	1.114–1.124	10–32	1.375	1.251	0.250–0.252	1.367–1.377	1/4–20	1.750
9	1.188	0.250–0.252	1.304–1.314	1/4–20	1.750	1.501	0.375–0.377	1.669–1.679	1/4–20	2.125
10	1.188	0.250–0.252	1.304–1.314	1/4–20	1.750	1.501	0.375–0.377	1.669–1.679	1/4–20	2.125
11	1.188	0.250–0.252	1.304–1.314	1/4–20	1.750	1.501	0.375–0.377	1.669–1.679	1/4–20	2.125
12	1.188	0.250–0.252	1.304–1.314	1/4–20	1.750	1.501	0.375–0.377	1.669–1.679	1/4–20	2.125
13	1.438	0.375–0.377	1.605–1.615	1/4–20	2.125	1.688	0.375–0.377	1.859–1.869	1/4–20	2.500
14	1.438	0.375–0.377	1.605–1.615	1/4–20	2.125	1.688	0.375–0.377	1.859–1.869	1/4–20	2.500
15	1.688	0.375–0.377	1.859–1.869	1/4–20	2.500	1.938	0.500–0.502	2.160–2.170	1/4–20	2.500
16	1.688	0.375–0.377	1.859–1.869	1/4–20	2.500	1.938	0.500–0.502	2.160–2.170	1/4–20	2.500

All dimensions in inches

*See the correspondingly numbered item in 18.591.1 for the frame designation and base dimensions of the motors to which these coupling dimensions apply.

**The tolerance on the BX dimension shall be as follows.
BX dimension—1.001 to 1.500 inches, inclusive, +0.001 inch, -0.000 inch
BX dimension—larger than 1.500 inches, +0.0015 inch, -0.000 inch

[1]For the meaning of the letter dimensions, see 4.01 and Figure 4-5.

Copyright National Electrical Manufacturers Association
Provided by IHS under license with NEMA
No reproduction or networking permitted without license from IHS

Not for Resale

MEDIUM AC SQUIRREL-CAGE INDUCTION MOTORS FOR CLOSE-COUPLED PUMPS

(A face-mounting close-coupled pump motor is a medium alternating-current squirrel-cage induction open or totally enclosed motor, with or without feet, having a shaft suitable for mounting an impeller and sealing device. For explosion proof motors, see Note 3 of Figure 18-35.)

RATINGS

18.601 VOLTAGE RATINGS

See 10.30.

18.602 FREQUENCIES

See 10.31.1.

18.603 NAMEPLATE MARKINGS

See 10.40.

18.604 NAMEPLATE TIME RATINGS

See 10.36.

TESTS AND PERFORMANCE

18.605 TEMPERATURE RISE

See 12.43.

18.606 TORQUES

For single-phase medium motors, see 12.32.

For polyphase medium motors, see 12.38, 12.39, and 12.40.

18.607 LOCKED-ROTOR CURRENTS

For single-phase medium motors, see 12.34. For three-phase medium motors, see 12.35 and 12.36.

18.608 HIGH-POTENTIAL TEST

See 3.01 and 12.03.

18.609 VARIATIONS FROM RATED VOLTAGE AND RATED FREQUENCY

See 12.44.

18.610 BALANCE OF MOTORS ▲

See MG 1, Part 7.

MANUFACTURING

18.613 FRAME ASSIGNMENTS

Frame assignments shall be in accordance with NEMA Standards Publication No. MG 13, except for the omission of the suffix letters T and TS and the inclusion of the suffix letters in accordance with 18.614, i.e., 254JP.

Copyright National Electrical Manufacturers Association
Provided by IHS under license with NEMA
No reproduction or networking permitted without license from IHS
Not for Resale

18.614 DIMENSIONS FOR TYPES JM AND JP ALTERNATING-CURRENT FACE-MOUNTING CLOSE-COUPLED PUMP MOTORS HAVING ANTIFRICTION BEARINGS

(This standard was developed jointly with the Hydraulic Institute.)

See Figure 18-35.

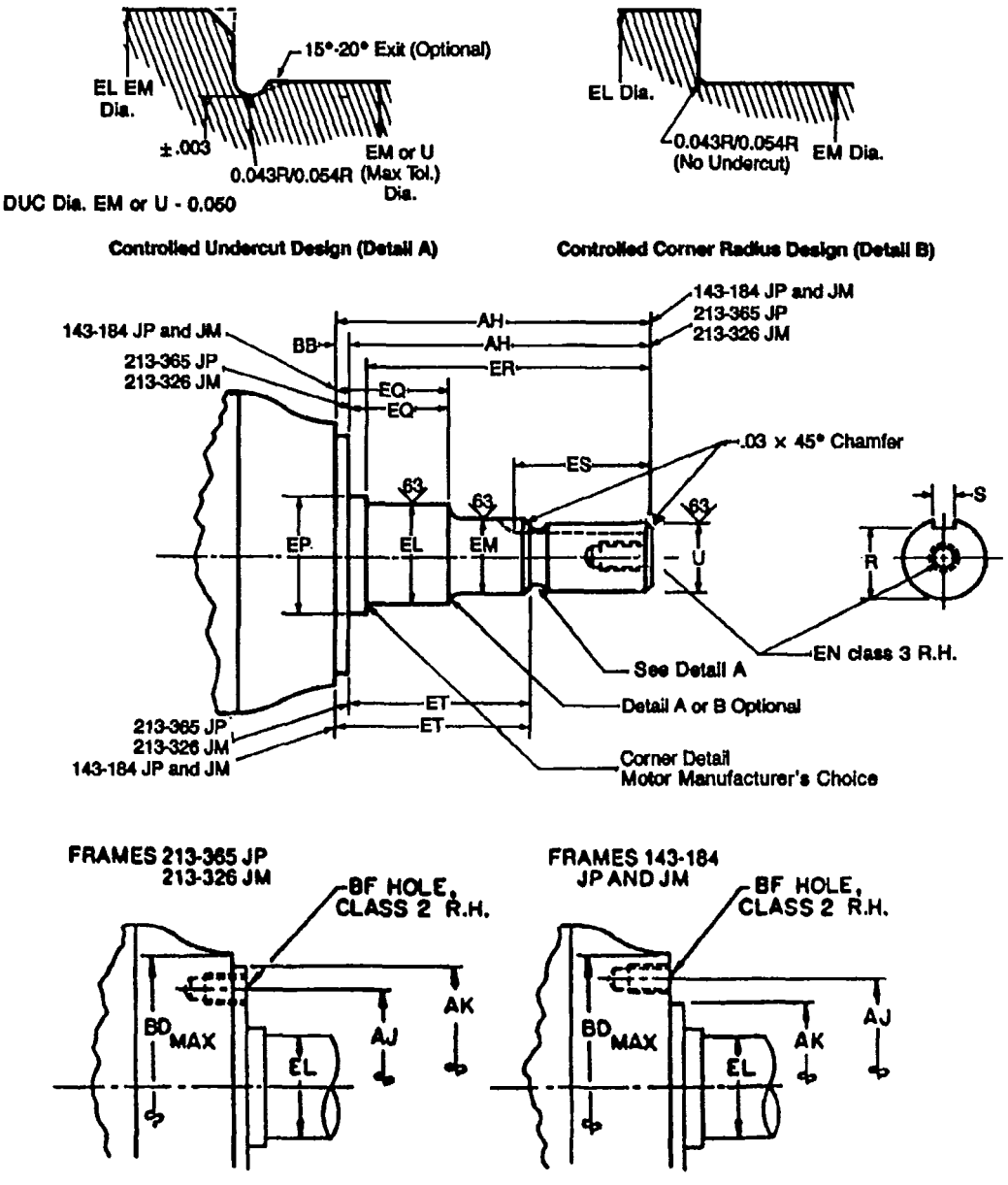

Figure 18-35
DIMENSIONS FOR PUMP MOTORS HAVING ANTIFRICTION BEARINGS

NOTES

1—AH, EQ, and ET dimensions measured with the shaft pulled by hand away from the motor to the limit of end play.

2—AJ dimension-centerline of bolt holes is within 0.015 inch of true location for frames 143 to 256 JM and JP, inclusive, and within 0.025 inch of true location for frames 284 to 365 JM and JP, inclusive. True location is defined as angular and diametrical location with reference to the centerline of the AK dimension.

3—Shaft end play should not exceed the bearing internal axial movement. Bearing mounting fits should be as recommended for pump application by the bearing manufacturer. (This note applies to open and totally enclosed motors. For explosion-proof motors, the individual motor manufacturer should be contacted.)

Copyright National Electrical Manufacturers Association
Provided by IHS under license with NEMA
No reproduction or networking permitted without license from IHS
Not for Resale

Copyright National Electrical Manufacturers Association
Provided by IHS under license with NEMA
No reproduction or networking permitted without license from IHS

Table 1 of 1-18.614

DIMENSIONS FOR TYPE JM ALTERNATING-CURRENT FACE-MOUNTING CLOSE-COUPLED PUMP MOTORS

Frame Designations	U	AH*	AJ**	AK	BB	BD Max	BF Number	BF Tap Size	BF Bolt Penetration Allowance
143JM and 145JM	0.8745 0.8740	4.281 4.219	5.875	4.500 4.497	0.156 0.125	6.62	4	3/8–16	0.56
182JM and 184JM	0.8745 0.8740	4.281 4.219	5.875	4.500 4.497	0.156 0.125	6.62	4	3/8–16	0.56
213JM and 215JM	0.8745 0.8740	4.281 4.219	7.250	8.500 8.497	0.312 0.250	9.00	4	1/2–13	0.75
254JM and 256JM	1.2495 1.2490	5.281 5.219	7.250	8.500 8.497	0.312 0.250	10.00	4	1/2–13	0.75
284JM and 286JM	1.2495 1.2490	5.281 5.219	11.000	12.500 12.495	0.312 0.250	14.00	4	5/8–11	0.94
324JM and 326JM	1.2495 1.2490	5.281 5.219	11.000	12.500 12.495	0.312 0.250	14.00	4	5/8–11	0.94

Frame Designations	EL	EM	EN Tap Size	EN Tap Drill Depth Max	EN Bolt Penetration Allowance	EP Min	EQ*	ER Min	Keyseat R	Keyseat ES Min	Keyseat S	ET*
143JM and 145JM	1.156 1.154	1.0000 0.9995	3/8–16	1.12	0.75	1.156	0.640 0.610	4.25	0.771–0.756	1.65	0.190–0.188	2.890 2.860
182JM and 184JM	1.250 1.248	1.0000 0.9995	3/8–16	1.12	0.75	1.250	0.640 0.610	4.25	0.771–0.756	1.65	0.190–0.188	2.890 2.860
213JM and 215JM	1.250 1.248	1.0000 0.9995	3/8–16	1.12	0.75	1.750	0.640 0.610	4.25	0.771–0.756	1.65	0.190–0.188	2.890 2.860
254JM and 256JM	1.750 1.748	1.3750 1.3745	1/2–13	1.50	1.00	1.750	0.640 0.610	5.25	1.112–1.097	2.53	0.252–0.250	3.015 2.985
284JM and 286JM	1.750 1.748	1.3750 1.3745	1/2–13	1.50	1.00	2.125	0.645 0.605	5.25	1.112–1.097	2.53	0.252–0.250	3.020 2.980
324JM and 326JM	1.750 1.748	1.3750 1.3745	1/2–13	1.50	1.00	2.125	0.645 0.605	5.25	1.112–1.097	2.53	0.252–0.250	3.020 2.980

All dimensions in inches.

*AH, EQ, and ET dimensions measured with the shaft pulled by hand away from the motor to the limit of end play

**AJ dimension—centerline of bolt holes is within 0.015 inch of true location for frames 143 to 256 JM and JP, inclusive, and within 0.025 inch of true location for frames 284 to 365 JM and JP, inclusive. True location is determined as angular and diametrical location with reference to the centerline of the AK dimension.

NOTE—For the meaning of the letter dimensions, see Figure 18-35 and 4.01.

Tolerances (see 4.07.)

Face runout—

143JM to 256JM frames, incl., 0.004-inch indicator reading

284JM to 326JM frames, incl., 0.006-inch indicator reading

Permissible eccentricity of mounting rabbet—

143JM to 256JM frames, incl., 0.004-inch indicator reading

284JM to 326JM frames, incl., 0.006-inch indicator reading

Permissible shaft runout—

143JM to 256JM frames, incl., 0.002-inch indicator reading

284JM to 326JM frames, incl., 0.003-inch indicator reading

Not for Resale

Copyright National Electrical Manufacturers Association
Provided by IHS under license with NEMA
No reproduction or networking permitted without license from IHS

Table 2 of 1-18.614

DIMENSIONS FOR TYPE JP ALTERNATING-CURRENT FACE-MOUNTING CLOSE-COUPLED PUMP MOTORS

Frame Designations	U	AH*	AJ**	AK	BB	BD Max	BF Number	BF Tap Size	BF Bolt Penetration Allowance
143JP and 145JP	0.8745	7.343	5.875	4.500	0.156	6.62	4	3/8–16	0.56
	0.8740	7.281		4.497	0.125				
182JP and 184JP	0.8745	7.343	5.875	4.500	0.156	6.62	4	3/8–16	0.56
	0.8740	7.281		4.497	0.125				
213JP and 215JP	1.2495	8.156	7.250	8.500	0.312	9.00	4	1/2–13	0.75
	1.2490	8.094		8.497	0.250				
254JP and 256JP	1.2495	8.156	7.250	8.500	0.312	10.00	4	1/2–13	0.75
	1.2490	8.094		8.497	0.250				
284JP and 286JP	1.2495	8.156	11.000	12.500	0.312	14.00	4	5/8–11	0.94
	1.2490	8.094		12.495	0.250				
324JP and 326JP	1.2495	8.156	11.000	12.500	0.312	14.00	4	5/8–11	0.94
	1.2490	8.094		12.495	0.250				
364JP and 365JP	1.6245	8.156	11.000	12.500	0.312	14.00	4	5/8–11	0.94
	1.6240	8.094		12.495	0.250				

Frame Designations	EL	EM	EN Tap Size	EN Tap Drill Depth Max	EN Bolt Penetration Allowance	EP Min	EQ*	ER Min	Keyseat ES R	Keyseat ES Min	Keyseat ES S	ET*
143JP and 145JP	1.156	1.0000	3/8–16	1.12	0.75	1.156	1.578	7.312	0.771–	1.65	0.190–	5.952
	1.154	0.9995					1.548		0.756		0.188	5.922
182JP and 184JP	1.250	1.0000	3/8–16	1.12	0.75	1.250	1.578	7.312	0.771–	1.65	0.190–	5.952
	1.248	0.9995					1.548		0.756		0.188	5.922
213JP and 215JP	1.750	1.3750	1/2–13	1.50	1.00	1.750	2.390	8.125	1.112–	2.53	0.252–	5.890
	1.748	1.3745					2.360		1.097		0.250	5.860
254JP and 256JP	1.750	1.3750	1/2–13	1.50	1.00	1.750	2.390	8.125	1.112–	2.53	0.252–	5.890
	1.748	1.3745					2.360		1.097		0.250	5.860
284JP and 286JP	1.750	1.3750	1/2–13	1.50	1.00	2.125	2.390	8.125	1.112–	2.53	0.252–	5.895
	1.748	1.3745					2.360		1.097		0.250	5.855
324JP and 326JP	1.750	1.3750	1/2–13	1.50	1.00	2.125	2.395	8.125	1.112–	2.53	0.252–	5.895
	1.748	1.3745					2.355		1.097		0.250	5.855
364JP and 365JP	2.125	1.7500	1/2–13	1.50	1.00	2.500	2.395	8.125	1.416–	2.53	0.377–	5.895
	2.123	1.7495					2.355		1.401		0.375	5.855

All dimensions in inches.

*AH, EQ, and ET dimensions measured with the shaft pulled by hand away from the motor to the limit of end play

**AJ dimension—centerline of bolt holes is within 0.015 inch of true location for frames 143 to 256 JM and JP, inclusive, and within 0.025 inch of true location for frames 284 to 365 JM and JP, inclusive. True location is defermined as angular and diametrical location with reference to the centerline of the AK dimension.

NOTE—For the meaning of the letter dimensions, see Figure 18-35 and 4.01.

Tolerances (see 4.07.)

Face runout—

143JP to 256JP frames, incl., 0.004-inch indicator reading

284JP to 326JP frames, incl., 0.006-inch indicator reading

Permissible eccentricity of mounting rabbet—

143JP to 256JP frames, incl., 0.004-inch indicator reading

284JP to 326JP frames, incl., 0.006-inch indicator reading

Permissible shaft runout—

143JP to 256JP frames, incl., 0.002-inch indicator reading

284JP to 326JP frames, incl., 0.003-inch indicator reading

Not for Resale

Copyright National Electrical Manufacturers Association
Provided by IHS under license with NEMA
No reproduction or networking permitted without license from IHS

18.620 DIMENSIONS FOR TYPE LP AND LPH VERTICAL SOLID-SHAFT SINGLE-PHASE AND POLYPHASE DIRECT-CONNECTED SQUIRREL-CAGE INDUCTION MOTORS (HAVING THE THRUST BEARING IN THE MOTOR) FOR CHEMICAL PROCESS IN-LINE PUMP APPLICATIONS

See Figure 18-36.

Frame Designations	AJ*	AK	BB Min	BD Max	BF Clearance Hole Number	BF Clearance Hole Size	U	V Min	AH**	EP Min	EU	Keyseat R	Keyseat ES Min	Keyseat S
143LP and 145LP	9.125	8.253 8.250	0.19	10.00	4	0.44	1.1250 1.1245	2.75	2.781 2.719	1.156	0.875 0.870	0.986–0.971	1.28	0.252–0.250
182LP and 184LP	9.125	8.253 8.250	0.19	10.00	4	0.44	1.1250 1.1245	2.75	2.781 2.719	1.156	0.875 0.870	0.986–0.971	1.28	0.252–0.250
213LP and 215LP	9.125	8.253 8.250	0.19	10.00	4	0.44	1.6250 1.6245	2.75	2.781 2.719	1.750	1.250 1.245	1.416–1.401	1.28	0.377–0.375
254LP and 256LP	9.125	8.253 8.250	0.19	10.00	4	0.44	1.6250 1.6245	2.75	2.781 2.719	1.750	1.250 1.245	1.416–1.401	1.28	0.377–0.375
284LP and 286LP=	9.125	8.253 8.250	0.19	10.00	4	0.44	2.1250 2.1240	4	4.531 4.469	2.250	1.750 1.745	1.845–1.830	3.03	0.502–0.500
324LP and 326LP	14.750	13.505 13.500	0.25	16.50	4	0.69	2.1250 2.1240	4	4.531 4.469	2.250	1.750 1.745	1.845–1.830	3.03	0.502–0.500
364LP and 365LP	14.750	13.505 13.500	0.25	16.50	4	0.69	2.1250 2.1240	4	4.531 4.469	2.250	1.750 1.745	1.845–1.830	3.03	0.502–0.500
404LP and 405LP	14.750	13.505 13.500	0.25	16.50	4	0.69	2.1250 2.1240	4	4.531 4.469	2.250	1.750 1.745	1.845–1.830	3.03	0.502–0.500
444LP and 445LP	14.750	13.505 13.500	0.25	16.50	4	0.69	2.1250 2.1240	4	4.531 4.469	2.250	1.750 1.745	1.845–1.830	3.03	0.502–0.500
=These frames have the following alternate dimensions:														
284LPH and 286LPH	14.750	13.505 13.500	0.25	16.50	4	0.69	2.1250 2.1240	4	4.531 4.469	2.250	1.750 1.745	1.845–1.830	3.03	0.502–0.500

All dimensions in inches.

*AJ centerline of bolt holes within 0.025 inch for all frames of true location. True location is defined as angular and diametrical location with reference to the centerline of AK.

**Dimension measured with motor in vertical position shaft down

NOTES

1—Total axial end play of shaft is 0.002 inch maximum under 50 pounds reversing static load with motor in horizontal position at ambient temperature.

2—Radial displacement at end of motor shaft is 0.001 inch maximum at ambient temperature with zero axial load and a 25-pound force applied at the pump end of the motor shaft.

3—The assignment of horsepower and speed ratings to these frames should be in accordance with NEMA Standards Publication No. MG 13, except for the includion of the suffix letters LP and LPH in place of the suffix letters T and TS.

4—Motor balance should not exceed 0.001 inch for all operating speeds. See 12.07 for method of measurement.

Tolerances (See 4.07)

Face runout and permissible eccentricity of mounting rabbet—0.004-inch indicator reading

Permissible shaft runout—0.001-inch indicator reading

Not for Resale

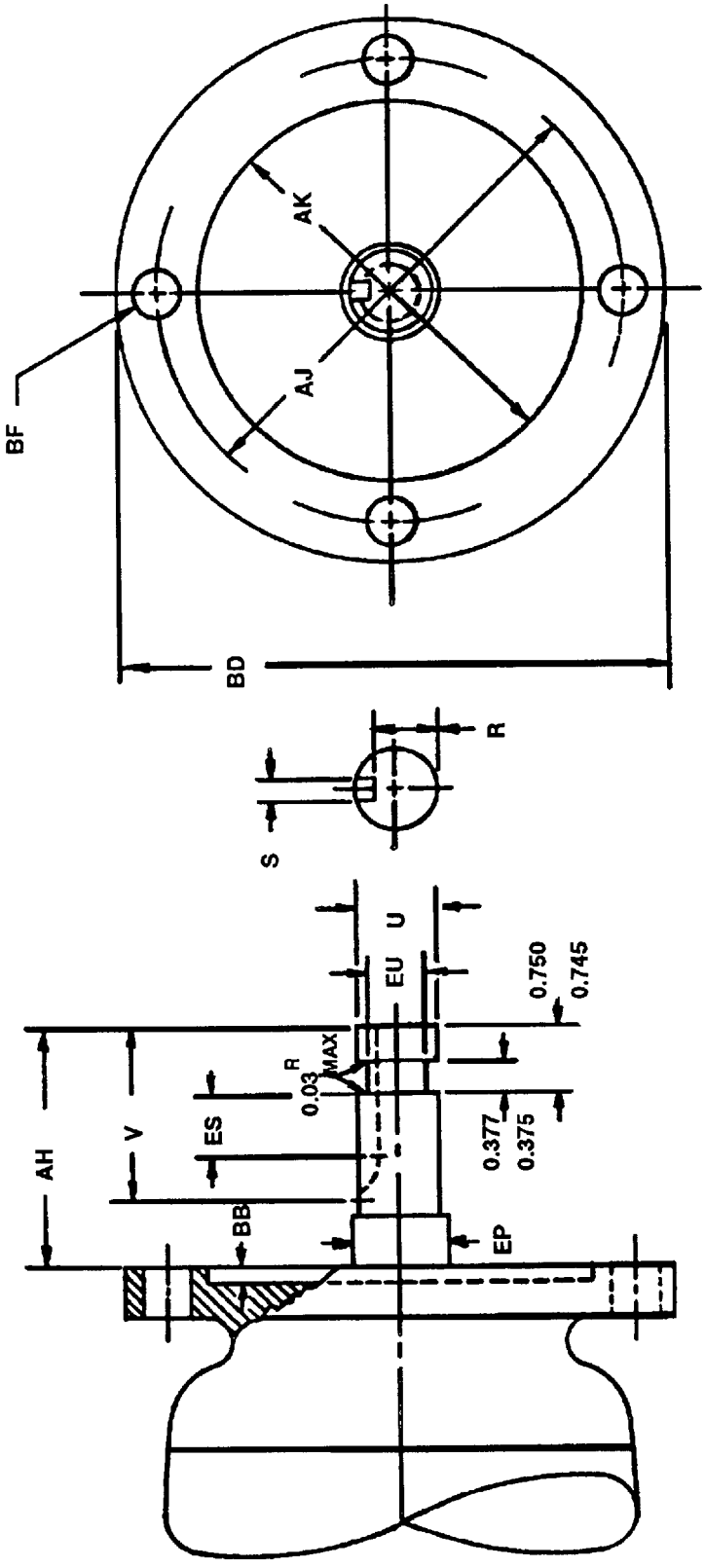

Figure 18-36
DIMENSIONS OF INDUCTION MOTORS FOR CHEMICAL PROCESS IN-LINE PUMP APPLICATIONS

Copyright National Electrical Manufacturers Association
Provided by IHS under license with NEMA
No reproduction or networking permitted without license from IHS

Not for Resale

Copyright National Electrical Manufacturers Association
Provided by IHS under license with NEMA
No reproduction or networking permitted without license from IHS
Not for Resale

18.625 DIMENSIONS FOR TYPE HP AND HPH VERTICAL SOLID-SHAFT SINGLE-PHASE AND POLYPHASE DIRECT-CONNECTED SQUIRREL-CAGE INDUCTION MOTORS FOR PROCESS AND IN-LINE PUMP APPLICATIONS

(This standard was developed jointly with the Hydraulic Institute.)

See Figure 18-37

Frame Designations	AJ*	AK	BB Min	BD Max	BF Clearance Hole Number	BF Clearance Hole Size	U	V Min	AH†	EP Min	EU	Keyseat R	Keyseat ES Min	Keyseat S
143HP and 145HP	9.125	8.253	0.19	10.00	4	0.44	0.8750	2.75	2.781	1.156	0.688	0.771–0.756	1.28	0.190–0.188
		8.250					0.8745		2.719		0.683			
182HP and 184HP	9.125	8.253	0.19	10.00	4	0.44	1.1250	2.75	2.781	1.156	0.875	0.986–0.971	1.28	0.252–0.250
		8.250					1.1245		2.719		0.870			
213HP and 215HP	9.125	8.253	0.19	10.00	4	0.44	1.1250	2.75	2.781	1.375	0.875	0.986–0.971	1.28	0.252–0.250
		8.250					1.1245		2.719		0.870			
254HP and 256HP	9.125	8.253	0.19	10.00	4	0.44	1.1250	2.75	2.781	1.750	0.875	0.986–0.971	1.28	0.252–0.250
		8.250					1.1245		2.719		0.870			
284HP and 286HP††	9.125	8.253	0.19	10.00	4	0.44	1.1250	2.75	2.781	1.750	0.875	0.986–0.971	1.28	0.252–0.250
		8.250					1.1240		2.719		0.870			
324HP and 326HP	14.750	13.505	0.25	16.50	4	0.69	1.6250	4.50	4.531	2.125	1.250	1.416–1.401	3.03	0.377–0.375
		13.500					1.6240		4.469		1.245			
364HP and 365HP	14.750	13.505	0.25	16.50	4	0.69	1.6250	4.40	4.531	2.250	1.250	1.416–1.401	3.03	0.377–0.375
		13.500					1.6240		4.469		1.245			
404HP and 405HP††	14.750	13.505	0.25	16.50	4	0.69	1.6250	4.50	4.562	2.250	1.250	1.416–1.401	3.03	0.377–0.375
		13.500					1.6240		4.438		1.245			
444HP and 445HP	14.750	13.505	0.25	16.50	4	0.69	2.1250	4.50	4.562	2.250	1.750	1.845–1.830	3.03	0.502–0.500
		13.500					2.1240		4.438		1.745			
††These frames have the following alternate dimensions:														
284HPH and 286HPH	14.750	13.505	0.25	16.50	4	0.69	1.6250	4.50	4.531	1.750	1.250	1.416–1.401	3.03	0.377–0.375
		13.500					1.6245		4.469		1.245			
404HPH and 405HPH	14.750	13.505	0.25	16.50	4	0.69	2.1250	4.50	4.562	2.250	1.750	1.845–1.830	3.03	0.502–0.500
		13.500					2.1240		4.438		1.745			

All dimensions in inches.

*AJ centerline of bolt holes within 0.025 inch for all frames of true location. True location is defined as angular and diametrical location with reference to the centerline of AK.

†Dimension measured with motor in vertical position shaft down.

NOTES

1—Where continuous thrust in either direction may occur, the shaft end play should not exceed the bearing internal axial movement. The bearing and mounting fits should be as recommended by the bearing manufacturer for pump applications. Note 1 applies to open and totally enclosed motors only; for explision-proof motors, contact individual motor manufacturers.

2—The assignment of horsepower and speed ratings to these frames should be in accordance with NEMA Standards Publication No. MG 13, except for the inclusion of the suffix letters HP and HPH in place of the suffix letters T and TS.

Tolerances (see 4.07)

Face runout—
For AK dimension 8.250 inch, 0.004-inch indicator reading
For AK dimension 13.500 inch, 0.006-inch indicator reading

Permissible eccentricity of mounting rabbet—
For AK dimension 8.250 inch, 0.004-inch indicator reading
For AK dimension 13.500 inch, 0.006-inch indicator reading

Permissible shaft runout—
For AK dimension 8.250 inch, 0.002-inch indicator reading
For AK dimension 13.500 inch, 0.002-inch indicator reading

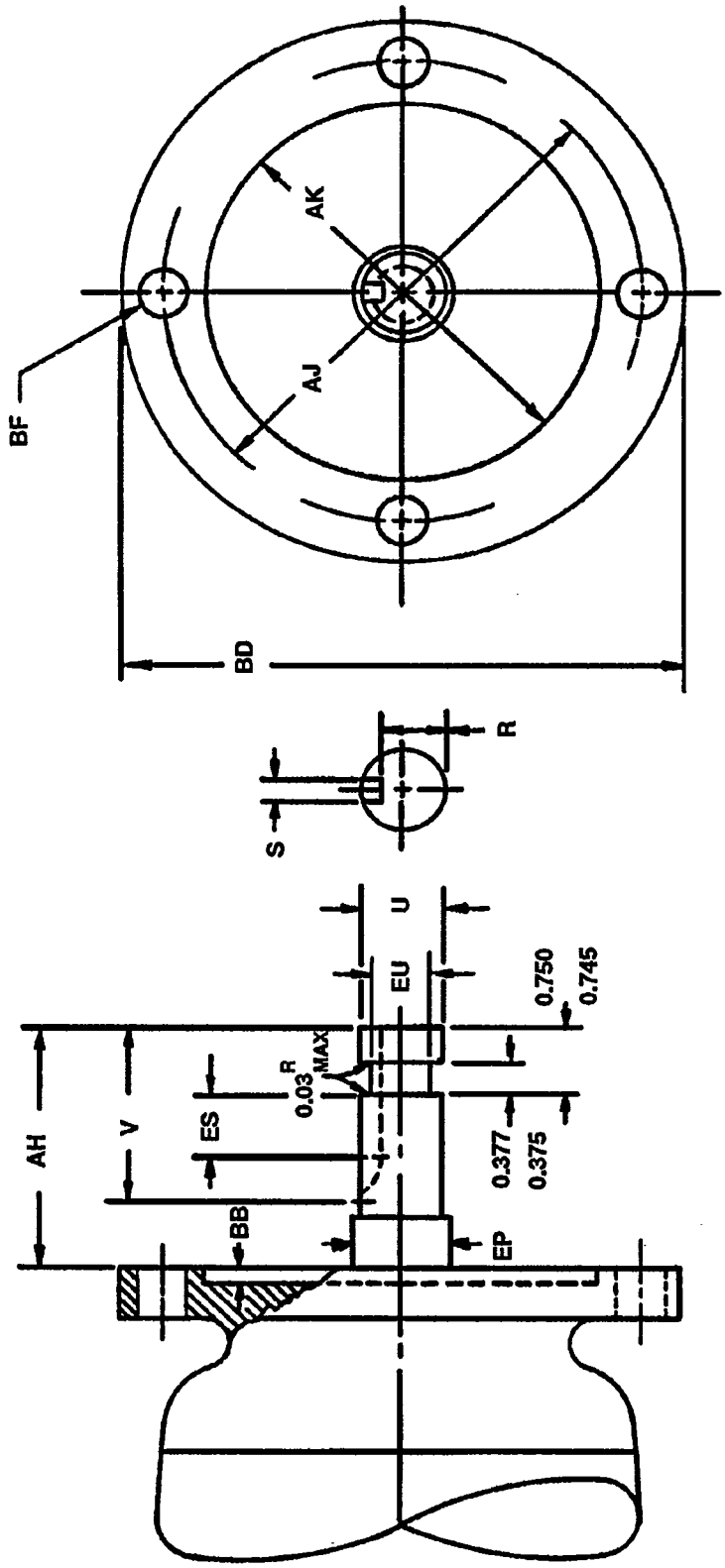

Figure 18-37
DIMENSIONS OF INDUCTION MOTORS FOR PROCESS AND IN-LINE PUMP APPLICATIONS

Copyright National Electrical Manufacturers Association
Provided by IHS under license with NEMA
No reproduction or networking permitted without license from IHS

Not for Resale

DC PERMANENT-MAGNET TACHOMETER GENERATORS FOR CONTROL SYSTEMS

(A direct-current permanent-magnet control tachometer generator is a direct-current generator designed to have an output voltage proportional to rotor speed for use in open-loop or closed-loop control systems.)

18.626 CLASSIFICATION ACCORDING TO ELECTRICAL TYPE

Direct-current permanent-magnet excited

18.627 CLASSIFICATION ACCORDING TO OUTPUT VOLTAGE RATING

a. High-voltage type
b. Low-voltage type

RATINGS

18.628 OUTPUT VOLTAGE RATINGS

The output voltage ratings of high-voltage-type tachometer generators shall be 50, 100, and 200 volts per 1000 rpm.

The output voltage ratings of low-voltage-type tachometer generators shall be 2, 4, 8, 16, and 32 volts per 1000 rpm.

18.629 CURRENT RATING

The current rating of high-voltage-type tachometer generators shall be 25 milliamperes at the highest rate of speed.

Low-voltage-type tachometer generators do not have a current rating. In general, the load impedance should be at least 1000 times the armature resistance.

18.630 SPEED RATINGS

The speed range of high-voltage-type tachometer generators shall be 100–5000, 100–3600, 100–2500, 100–1800, and 100–1250 rpm.

The speed range of low-voltage-type tachometer generators shall be 100–10000, 100–5000, and 100–3600 rpm.

TESTS AND PERFORMANCE

18.631 TEST METHODS

Tests to determine performance characteristics shall be made in accordance with IEEE Std 251.

18.632 TEMPERATURE RISE

Control tachometer generators shall have a Class A insulation system[1] and shall be designed for use in a maximum ambient of 65°C. The temperature rise above the temperature of the cooling medium for each of the various parts of the generator, when tested in accordance with the rating, shall not exceed the following values.

	High-Voltage Type	Low-Voltage Type
Coil Windings, Degrees C		
Armature—resistance	40	50
Commutators—thermometer...	40	40

The temperatures attained by cores, commutators, and miscellaneous parts (such as brushholders and brushes) shall not injure the insulation or the machine in any respect.

Abnormal deterioration of insulation may be expected if the ambient temperature stated above is exceeded in regular operation.

18.633 VARIATION FROM RATED OUTPUT VOLTAGE

18.633.1 High-Voltage Type

The no-load voltage of individual generators shall be within plus or minus 5 percent of the rated output voltage.

[1]See 1.66 for description of classes of insulation.

Copyright National Electrical Manufacturers Association
Provided by IHS under license with NEMA
No reproduction or networking permitted without license from IHS
Not for Resale

18.633.2 Low-Voltage Type

The voltage with specified load impedance shall be within plus or minus 5 percent of the rated output voltage.

18.634 HIGH-POTENTIAL TESTS

18.634.1 See 3.01.

18.634.2 The high-potential test shall be made by applying 1000 volts plus twice the rated voltage of the tachometer generator. Rated voltage shall be determined by using the tachometer generator rated voltage at maximum rated speed.

18.635 OVERSPEED

Control tachometer generators shall be so constructed that, in an emergency, they will withstand without mechanical injury a speed of 125 percent of the maximum rated speed.

This overspeed may damage the commutator and brush surfaces with a resulting temporary change in performance characteristics.

18.636 PERFORMANCE CHARACTERISTICS

The following typical performance data shall be available for each control tachometer generator. Data will normally be supplied in tabulated form.

18.636.1 High-Voltage Type

a. Peak-to-peak or root mean square ripple voltage data, as specified, expressed as a percentage of output voltage over the rated speed range and at one or more load impedances
b. Linearity data as a percentage of output voltage over the rated speed range at no-load and at one or more load impedances
c. Reversing error data as a percentage of output voltage over the rated speed range at no-load
d. Short-time voltage stability data at constant speed and load impedance in percent of average voltage
e. Long-time voltage stability data at constant speed and load impedance in percent voltage change per hour
f. Rotor resistance between bars of opposite polarity corrected to 25°C
g. Standstill (break-away) and maximum running torque-ounce-feet or ounce-inches
h. Wk^2 of rotor-lb-in.^{2}
i. Total weight of generator

18.636.2 Low-Voltage Type

a. Peak-to-peak or root mean square ripple voltage data, as specified, expressed as a percentage of output voltage over the rated speed range and at one or more load impedances
b. Linearity data as a percentage of output voltage over the rated speed range at no-load and at one or more load impedances
c. Reversing error data as a percentage of output voltage over the rated speed at no load
d. Rotor resistance between bars of opposite polarity corrected to 25°C
e. Wk^2 of rotor-oz-in.^{2}

MANUFACTURING

18.637 NAMEPLATE MARKING

The following minimum amount of information shall be given on all nameplates. For abbreviations, see 1.80.

18.637.1 High-Voltage Type

a. Manufacturer's name or identification symbol
b. Manufacturer's type designation
c. Manufacturer's serial number or date code
d. Electrical type[1]
e. Voltage rating—volts per 1000 rpm
f. Speed range[1]
g. Maximum ambient temperature[1]
h. Calibration voltage—no-load test voltage and speed[1]

18.637.2 Low-Voltage Type

a. Manufacturer's name or identification symbol
b. Manufacturer's type designation
c. Voltage rating—volts per 1000 rpm

18.638 DIRECTION OF ROTATION

The standard direction of rotation shall be clockwise facing the end opposite the drive.

Tachometer generators may be operated on a reversing cycle provided that the period of operation on any one direction of rotation is no longer than 1 hour and a reasonable balance of time on each direction is maintained. Unequal operating time in both directions may result in uneven brush wear which can cause different output voltages, ripple content, and reversing error data. For such an

[1]On small units where nameplate size is such that it is impractical to mark all data, items d, f, g, and h shall be permitted to be on a separate card or tag.

Copyright National Electrical Manufacturers Association
Provided by IHS under license with NEMA
No reproduction or networking permitted without license from IHS
Not for Resale

application condition, the tachometer generator manufacturer should be consulted.

18.639 GENERAL MECHANICAL FEATURES

Control tachometer generators shall be constructed with the following mechanical features:

18.639.1 High-Voltage Type

a. Totally enclosed
b. Ball bearing
c. Generators built in frame 42 and larger shall have dimensions according to 11.60 or 11.34.
d. Generators built in frame 42 and larger shall have provisions for ½-inch conduit connection.

18.639.2 Low-Voltage Type

a. Open or totally enclosed
b. Ball bearing

18.640 TERMINAL MARKINGS

For clockwise rotation facing the end oppostite the drive, the positive terminal shall be marked A-2 or colored red, and the negative terminal shall be marked "A-1" or colored black.

TORQUE MOTORS

18.651 DEFINITION

A torque motor is a motor rated for operation at standstill.

18.652 NAMEPLATE MARKINGS

18.652.1 AC Torque Motors

The following minimum amount of information shall be given on all nameplates.

a. Manufacturer's type and frame designation
b. Locked rotor torque
c. Time rating
d. Maximum ambient temperature for which motor is designed
e. Insulation system designation (If stator and rotor use different classes of insulation systems, both insulation system designations shall be given on the nameplate, that for the stator being given first.)
f. Synchronous rpm
g. Frequency
h. Number of phases
i. Rated load amperes (locked rotor)
j. Voltage
k. The words "thermally protected" for motors equipped with thermal protectors[1]

18.652.2 DC Torque Motors

The following minimum amount of information shall be given on all nameplates.

a. Manufacturer's type and frame designation
b. Locked rotor torque
c. Time rating
d. Temperature rise
e. Voltage
f. Rated-load amperes (locked rotor)
g. Type of winding
h. The words "thermally protected" for motors equipped with thermal protectors[1]

[1]Thermal protection shall be permitted to be indicated on a separate plate.

Copyright National Electrical Manufacturers Association
Provided by IHS under license with NEMA
No reproduction or networking permitted without license from IHS

Not for Resale

SMALL MOTORS FOR CARBONATOR PUMPS

18.726 CLASSIFICATION ACCORDING TO ELECTRICAL TYPE

Single-phase—Split-phase

RATINGS

18.727 VOLTAGE RATINGS

The voltage rating of single-phase 60-hertz motors shall be 115 or 230 volts.

18.728 FREQUENCIES

Frequencies shall be 60 and 50 hertz.

18.729 HORSE POWER AND SPEED RATINGS

18.729.1 Horsepower Ratings

Horsepower ratings shall be 1/6, 1/4, and 1/3 horsepower.

18.729.2 Speed Ratings

Speed ratings shall be:

a. 60 hertz—1800 rpm synchronous speed, 1725 rpm approximate full-load speed
b. 50 hertz—1500 rpm synchronous speed, 1425 rpm approximate full-load speed

TESTS AND PERFORMANCE

18.730 TEMPERATURE RISE

Carbonator pump motors shall have either Class A or B insulation systems. The temperature rise above the temperature of the cooling medium shall be in accordance with 12.42.

18.731 BASIS OF HORSEPOWER RATING

For single-phase induction motors, see 10.34.

18.732 HIGH-POTENTIAL TESTS

See 3.01 and 12.03.

18.733 MAXIMUM LOCKED-ROTOR CURRENT—SINGLE PHASE

See the values for Design O motors in 12.33.

18.734 VARIATIONS FROM RATED VOLTAGE AND RATED FREQUENCY

See 12.44.

18.735 DIRECTION OF ROTATION

Motors for carbonator pumps shall normally be arranged for counterclockwise rotation when facing the end opposite the drive but shall be capable of operation in either direction.

MANUFACTURING

18.738 GENERAL MECHANICAL FEATURES

Carbonator-pump motors shall be constructed with the following mechanical features (see 18.739).

a. Open or dripproof
b. Sleeve bearing
c. Resilient mounting
d. Automatic reset thermal overload protector
e. Mounting dimensions and shaft extension in accordance with 18.739

Copyright National Electrical Manufacturers Association
Provided by IHS under license with NEMA
No reproduction or networking permitted without license from IHS
Not for Resale

18.739 DIMENSIONS FOR CARBONATOR PUMP MOTORS

See Figure 18-38.

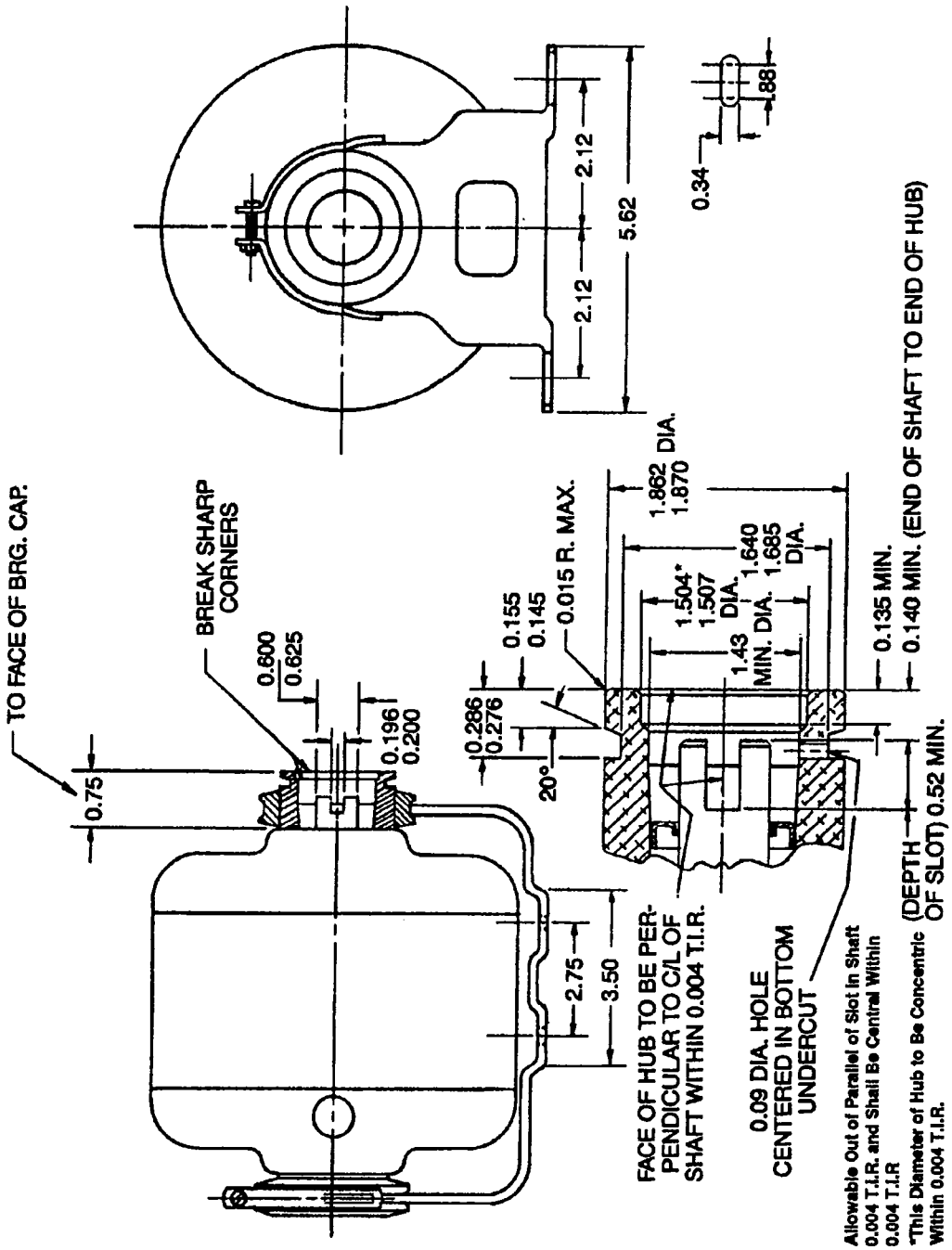

Figure 18-38
CARBONATOR PUMP MOTOR DIMENSIONS

Copyright National Electrical Manufacturers Association
Provided by IHS under license with NEMA
No reproduction or networking permitted without license from IHS

Not for Resale

Section III
LARGE MACHINES
Part 20
LARGE MACHINES—INDUCTION MACHINES

RATINGS

20.0 SCOPE

The standards in this Part 20 of Section III cover induction machines having (1) a continuous rating greater than given in the table below and (2) all ratings of 450 rpm and slower speeds.

Synchronous Speed	Motors, Squirrel-Cage and Wound Rotor, Hp	Generators, Squirrel-Cage kW
3600	500	400
1800	500	400
1200	350	300
900	250	200
720	200	150
600	150	125
514	125	100

20.05 BASIS OF RATING

Induction machines covered by this Part 20 shall be rated on a continuous-duty basis unless otherwise specified. The output rating of induction motors shall be expressed in horsepower available at the shaft at a specified speed, frequency, and voltage.

The output rating of induction generators shall be expressed in kilowatts available at the terminals at a specifed speed, frequency, and voltage.

20.10 MACHINE POWER AND SPEED RATINGS

Motor horsepower ratings shall be as follows.

Motor Hp Ratings				
100	600	2500	9000	19000
125	700	3000	10000	20000
150	800	3500	11000	22500
200	900	4000	12000	25000
250	1000	4500	13000	27500
300	1250	5000	14000	30000
350	1500	5500	15000	35000
400	1750	6000	16000	40000
450	2000	7000	17000	45000
500	2250	8000	18000	50000

Generator output ratings shall be as follows.

Generator kW Ratings					
75	450	1750	5500	14000	27500
100	500	2000	6000	15000	30000
125	600	2250	7000	16000	32500
150	700	2500	8000	17000	35000
200	800	3000	9000	18000	37500
250	900	3500	10000	19000	40000
300	1000	4000	11000	20000	45000
350	1250	4500	12000	22500	50000
400	1500	5000	13000	25000	

Sychronous speed ratings shall be as follows.

Synchronous Speed Ratings, Rpm at 60 Hertz*			
3600	720	400	277
1800	600	360	257
1200	514	327	240
900	450	300	225

*At 50 hertz, the speeds are 5/6 of the 60-hertz speeds.

NOTE—It is not practical to build induction machines of all ratings at all speeds.

Copyright National Electrical Manufacturers Association
Provided by IHS under license with NEMA
No reproduction or networking permitted without license from IHS

Not for Resale

20.11 POWER RATINGS OF MULTISPEED MACHINES

The power ratings of multispeed machines shall be selected as follows.

20.11.1 Constant Power

The horsepower or kilowatt rating for each rated speed shall be selected from 20.10.

20.11.2 Constant Torque

The horsepower or kilowatt rating for the highest rated speed shall be selected from 20.10. The horsepower or kilowatt rating for each lower speed shall be determined by multiplying the horsepower or kilowatt rating at the highest speed by the ratio of the lower synchronous speed to the highest synchronous speed.

20.11.3 Variable Torque

20.11.3.1 Variable Torque Linear

Torque varies directly with speed and the horsepower or kilowatt rating for the highest rated speed shall be selected from 20.10. The horsepower or kilowatt rating for each lower speed shall be determined by multiplying the horsepower or kilowatt rating at the highest speed by the square of the ratio of the lower synchronous speed to the highest synchronous speed.

20.11.3.2 Variable Torque Square

The torque varies as the square of speed and the horsepower or kilowatt rating for the highest rated speed shall be selected from 20.10. The horsepower or kilowatt rating for each lower speed shall be determined by multiplying the horsepower or kilowatt rating at the highest speed by the cube of the ratio of the lower synchronous speed to the highest synchronous speed.

20.12 VOLTAGE RATINGS

Voltages shall be 460, 575, 2300, 4000, 4600, 6600, and 13200 volts. These voltage ratings apply to 60-hertz circuits only.

NOTES

1—When specified, induction generators may have voltages of 480, 600, 2400, 4160, 4800, 6900, or 13800 volts.

2—It is not practical to build induction machines of all ratings for all these voltages. In general, based on motor design and manufacturing considerations, preferred motor voltage ratings are as follows:

Voltage Rating	Horsepower	Kilowatts
460 or 575	100–600	75–500
2300	200–5000	150–3500
4000 or 4600	200–10000	150–7500
6600	1000–15000	800–11000
13200	3500 and up	2500 and up

20.13 FREQUENCIES

The frequencies shall be 50 and 60 hertz.

20.14 SERVICE FACTOR

20.14.1 Service Factor of 1.0

When operated at rated voltage and frequency, induction machines covered by this Part 20 will have a service factor of 1.0 and a temperature rise not in excess of that specified in 20.40.1.

In those applications requiring an overload capacity, the use of a higher rating is recommended to avoid exceeding the adequate torque handling capacity.

20.14.2 Service Factor of 1.15

When specified, motors furnished in accordance with this standard will have a service factor of 1.15 and a temperature rise not in excess of that specified in 20.40.2 when operated at the service factor horsepower rating with rated voltage and frequency maintained.

20.14.3 Application of Motors with a Service Factor of 1.15

20.14.3.1 GENERAL

A motor having a 1.15 service factor is suitable for continuous operation at rated load under the usual service conditions given in 20.80.2. When the voltage and frequency are maintained at the value on the nameplate, the motor may be overloaded up to the horsepower obtained by multiplying the rated horsepower by the service factor shown on the nameplate. When the motor is operated at a 1.15 service factor, it may have efficiency, power factor, and speed values different from those at rated load.

NOTE—The percent values of locked-rotor current, locked-rotor torque, and breakdown torque are based on the rated horsepower. Motors operating in the service factor range may not have the torque margin during acceleration as stated in 20.41.

20.14.3.2 TEMPERATURE RISE

When operated at the 1.15-service-factor-load, the motor will have a temperature rise not in excess of that specified in 20.40.2 with rated voltage and frequency maintained. No temperature rise is specified or implied for operation at rated load.

NOTE—The tables in 20.40.1 and 20.40.2 apply individually to a particular motor rating (that is, a 1.0 or 1.15 service factor), and it is not intended or implied that they be applied as a dual rating to an individual motor.

Operation at the temperature-rise values given in 20.40.2 for a 1.15-service-factor load causes the motor insulation to age thermally at approximately twice the rate that occurs at the temperature-rise values given in 20.40.1 for a motor with a 1.0-service-factor load; that is, operating 1 hour at specified 1.15-service-factor temperature-rise values is approximately equivalent to operating 2 hours at the temperature-rise values specified for a motor with a 1.0 service factor.

Copyright National Electrical Manufacturers Association
Provided by IHS under license with NEMA
No reproduction or networking permitted without license from IHS

Not for Resale

20.40 TEMPERATURE RISE

The observable temperature rise under rated-load conditions of each of the various parts of the induction machine, above the temperature of the cooling air, shall not exceed the values given in the following tables. The temperature of the cooling air (see exception note below) is the temperature of the external air as it enters the ventilating openings of the machine, and the temperature rises given in the table are based on a maximum temperature of 40°C for this external air. Temperatures shall be determined in accordance with IEEE Std 112.

20.40.1 Machines with a 1.0 Service Factor at Rated Load

Item	Machine Part	Method of Temperature Determination	Temperature Rise, Degrees C* Class of Insulation System A	B	F	H
a	Insulated windings					
	1. All horsepower (kW) ratings	Resistance	60	80	105	125
	2. 1500 horsepower and less	Embedded detector**	70	90	115	140
	3. Over 1500 horsepower (1120 kW)					
	a) 7000 volts and less	Embedded detector**	65	85	110	135
	b) Over 7000 volts	Embedded detector**	60	80	105	125
b	The temperatures attained by cores, squirrel-cage windings, collector rings, and miscellaneous parts (such as brushholders and brushes, etc.) shall not injure the insulation or the machine in any respect.					

20.40.2 Machines with a 1.15 Service Factor at Service Factor Load

Item	Machine Part	Method of Temperature Determination	Temperature Rise, Degrees C* Class of Insulation System A	B	F	H
a	Insulated windings					
	1. All horsepower (kW) ratings	Resistance	70	90	115	135
	2. 1500 horsepower and less	Embedded detector**	80	100	125	150
	3. Over 1500 horsepower (1120 kW)					
	a) 7000 volts and less	Embedded detector**	75	95	120	145
	b) Over 7000 volts	Embedded detector**	70	90	115	135
b	The temperatures attained by cores, squirrel-cage windings, collector rings, and miscellaneous parts (such as brushholders and brushes, etc.) shall not injure the insulation or the machine in any respect.					

*For machines which operate under prevailing barometric pressure and which are designed not to exceed the specified temperature rise at altitudes from 3300 feet (1000 meters) to 13000 feet (4000 meters), the temperature rises, as checked by tests at low altitudes, shall be less than those listed in the foregoing table by 1 percent of the specified temperature rise for each 330 feet (100 meters) of altitude in excess of 3300 feet (1000 meters). (See 20.42)

**Embedded detectors are located within the slot of the machine and can be either resistance elements or thermocouples. For machines equipped with embedded detectors, this method shall be used to demonstrate conformity with the standard. (See 20.63.)

▲NOTE—Temperature rises in the foregoing tables are based upon a reference ambient temperature of 40°C. However, it is recognized that induction machines may be required to operate in an ambient temperature higher than 40°C. For successful operation of induction machines in ambient temperatures higher than 40°C, the temperature rises of the machines given in the foregoing tables shall be reduced by the number of degrees that the ambient temperature exceeds 40°C. (Exception—for totally enclosed water-air-cooled machines, the temperature of the cooling air is the temperature of the air leaving the coolers. Totally enclosed water-air-cooled machines are normally designed for the maximum cooling water temperature encountered at the location where each machine is to be installed. With a cooling water temperature not exceeding that for which the machine is designed:

a. On machines designed for cooling water temperature of 5°C to 30°C—the temperature of the air leaving the coolers shall not exceed 40°C.

b. On machines designed for higher cooling water temperatures—the temperature of the air leaving the coolers shall be permitted to exceed 40°C provided the temperature rises for the machine parts are then limited to values less than those given in the table by the number of degrees that the temperature of the air leaving the coolers exceeds 40°C.)

Copyright National Electrical Manufacturers Association
Provided by IHS under license with NEMA
No reproduction or networking permitted without license from IHS
Not for Resale

20.40A CODE LETTERS (FOR LOCKED-ROTOR kVA) ▲

The code letter designations for locked-rotor kVA per horsepower as measured at full voltage and rated frequency are as follows.

Letter Designation	kVA per Horsepower*	Letter Designation	kVA per Horsepower*
A	0–3.15	K	8.0–9.0
B	3.15–3.55	L	9.0–10.0
C	3.55–4.0	M	10.0–11.2
D	4.0–4.5	N	11.2–12.5
E	4.5–5.0	P	12.5–14.0
F	5.0–5.6	R	14.0–16.0
G	5.6–6.3	S	16.0–18.0
H	6.3–7.1	T	18.0–20.0
J	7.1–8.0	U	20.0–22.4
		V	22.4–and up

*Locked kVA per horsepower range includes the lower figure up to, but not including, the higher figure. For example, 3.14 is designated by letter A and 3.15 by letter B.

20.40A.1▲ Multispeed motors shall be marked with the code letter designating the locked-rotor kVA per horsepower for the highest speed at which the motor can be started, except constant-horsepower motors which shall be marked with the code letter for the speed giving the highest locked-rotor kVA per horsepower.

20.40A.2▲ Single-speed motors starting on Y connection and running on delta connection shall be marked with a code letter corresponding to the locked-rotor kVA per horsepower for the Y connection.

20.40A.3▲ Broad- or dual-voltage motors which have a different locked-rotor kVA per horsepower on the different voltages shall be marked with the code letter for the voltage giving the highest locked-rotor kVA per horsepower.

20.40A.4▲ Motors with 60- and 50-hertz ratings shall be marked with a code letter designating the locked-rotor kVA per horsepower on 60 Hertz.

20.40A.5▲ Part-winding-start motors shall be marked with a code letter designating the locked-rotor kVA per horsepower that is based upon the locked-rotor current for the full winding of the motor.

20.41 TORQUE

20.41.1 Standard ▲

The torques, with rated voltage and frequency applied, shall be not less than the following.

Torques	Percent of Rated Full-Load Torque
Locked-rotor*	60
Pull-up*	60
Breakdown*	175
Pushover**	175

*Applies to squirrel-cage induction motors or induction generators when specified for self-starting

**Applies to squirrel-cage induction generators

In addition, the developed torque at any speed up to that at which breakdown occurs, with starting conditions as specified in 20.45.2, shall be higher than the torque obtained from a curve that varies as the square of the speed and is equal to 100 percent of rated full-load torque at rated speed by at least 10 percent of the rated full-load torque.

20.41.2 High Torque ▲

When specified, the torques with rated voltage and frequency applied, shall not be less than the following.

Torques	Percent of Rated Full-Load Torque
Locked-rotor	200
Pull-up	150
Breakdown	190

In addition, the developed torque at any speed up to that at which breakdown occurs, with starting conditions as specified in 20.45.2, shall be higher than the torque obtained from a curve that has a constant 100 percent of rated full-load torque from zero speed to rated speed, by at least 10 percent of the rated full-load torque.

20.42 LOAD Wk^2 FOR POLYPHASE SQUIRREL-CAGE INDUCTION MOTORS ▲

Table 20-1 lists load Wk^2 which polyphase squirrel-cage motors having performance characteristics in accordance with this Part 20 can accelerate without injurious temperature rise provided that the connected load has a torque-speed characteristic according to 20.41.1. For torque-speed characteristics according to 20.41.2 maximum load Wk^2 shall be 50 percent of the values listed in Table 20-1.

The values of Wk^2 of connected load given in Table 20-1 were calculated from the following formula.[1]

Copyright National Electrical Manufacturers Association
Provided by IHS under license with NEMA
No reproduction or networking permitted without license from IHS

Not for Resale

Copyright National Electrical Manufacturers Association
Provided by IHS under license with NEMA
No reproduction or networking permitted without license from IHS
Not for Resale

Table 20-1

LOAD Wk^2 FOR POLYPHASE SQUIRREL-CAGE INDUCTION MOTORS*

	Synchronous Speed, Rpm											
	3600	1800	1200	900	720	600	514	450	400	360	327	300
Hp	Load Wk^2 (Exclusive of Motor Wk^2), Lb-ft^2											
100	. . .	. . .	. . .	. . .	. . .	. . .	. . .	12670	16830	21700	27310	33690
125	. . .	. . .	. . .	. . .	. . .	. . .	. . .	15610	20750	26760	33680	41550
150	. . .	. . .	. . .	. . .	. . .	. . .	13410	18520	24610	31750	39960	49300
200	. . .	. . .	. . .	. . .	. . .	12060	17530	24220	32200	41540	52300	64500
250	. . .	. . .	. . .	. . .	9530	14830	21560	29800	39640	51200	64400	79500
300	. . .	. . .	. . .	6540	11270	17550	25530	35300	46960	60600	76400	94300
350	. . .	. . .	. . .	7530	12980	20230	29430	40710	54200	69900	88100	108800
400	. . .	. . .	4199	8500	14670	22870	33280	46050	61300	79200	99800	123200
450	. . .	. . .	4666	9460	16320	25470	37090	51300	68300	88300	111300	137400
500	. . .	. . .	5130	10400	17970	28050	40850	56600	75300	97300	122600	151500
600	443	2202	6030	12250	21190	33110	48260	66800	89100	115100	145100	179300
700	503	2514	6900	14060	24340	38080	55500	76900	102600	132600	167200	206700
800	560	2815	7760	15830	27440	42950	62700	86900	115900	149800	189000	233700
900	615	3108	8590	17560	30480	47740	69700	96700	129000	166900	210600	260300
1000	668	3393	9410	19260	33470	52500	76600	106400	141900	183700	231800	286700
1250	790	4073	11380	23390	40740	64000	93600	130000	173600	224800	283900	351300
1500	902	4712	13260	27350	47750	75100	110000	153000	204500	265000	334800	414400
1750	1004	5310	15060	31170	54500	85900	126000	175400	234600	304200	384600	476200
2000	1096	5880	16780	34860	61100	96500	141600	197300	264100	342600	433300	537000
2250	1180	6420	18440	38430	67600	106800	156900	218700	293000	380300	481200	596000
2500	1256	6930	20030	41900	73800	116800	171800	239700	321300	417300	528000	655000
3000	1387	7860	23040	48520	85800	136200	200700	280500	376500	489400	620000	769000
3500	1491	8700	25850	54800	97300	154800	228600	319900	429800	559000	709000	881000
4000	1570	9460	28460	60700	108200	172600	255400	358000	481600	627000	796000	989000
4500	1627	10120	30890	66300	118700	189800	281400	395000	532000	693000	881000	1095000
5000	1662	10720	33160	71700	128700	206400	306500	430800	581000	758000	963000	1198000
5500	1677	11240	35280	76700	138300	222300	330800	465600	628000	821000	1044000	1299000
6000	. . .	11690	37250	81500	147500	237800	354400	499500	675000	882000	1123000	1398000
7000	. . .	12400	40770	90500	164900	267100	399500	565000	764000	1001000	1275000	1590000
8000	. . .	12870	43790	98500	181000	294500	442100	626000	850000	1114000	1422000	1775000
9000	. . .	13120	46330	105700	195800	320200	482300	685000	931000	1223000	1563000	1953000
10000	. . .	13170	48430	112200	209400	344200	520000	741000	1009000	1327000	1699000	2125000
11000	. . .	. . .	50100	117900	220000	366700	556200	794000	1084000	1428000	1830000	2291000
12000	. . .	. . .	51400	123000	233500	387700	590200	844800	1155000	1524000	1956000	2452000
13000	. . .	. . .	52300	127500	244000	407400	622400	893100	1224000	1617000	2078000	2608000
14000	. . .	. . .	52900	131300	253600	425800	652800	934200	1289000	1707000	2195000	2758000
15000	. . .	. . .	53100	134500	262400	442900	681500	983100	1352000	1793000	2309000	2904000

* See MG 1-20.42

$$\text{Load } Wk^2 = A\left[\frac{Hp^{0.95}}{\left(\frac{Rpm}{1000}\right)^{2.4}}\right] - 0.0685\left[\frac{Hp^{1.5}}{\left(\frac{Rpm}{1000}\right)^{1.8}}\right]$$

Where:

A = 24 for 300 to 1800 rpm, inclusive, motors
A = 27 for 3600 rpm motors

20.43 NUMBER OF STARTS

20.43.1 Squirrel-cage induction motors (or induction generators specified to start and accelerate a connected load) shall be capable of making the following starts, providing the Wk^2 of the load, the load torque during acceleration, the applied voltage, and the method of starting are those for which the motor was designed.

a. Two starts in succession, coasting to rest between starts, with the motor initially at ambient temperature
b. One start with the motor initially at a temperature not exceeding its rated load operating temperature.

20.43.2 If additional starts are required, it is recommended that none be made until all conditions affecting operation have been thoroughly investigated and the apparatus has been examined for evidence of excessive heating. It should be recognized that the number of starts should be kept to a minimum since the life of the motor is affected by the number of starts.

20.43.3 When requested by the purchaser, a separate starting information plate should be supplied on the motor.

20.44 OVERSPEEDS

Squirrel-cage and wound-rotor induction machines shall be so constructed that, in an emergency not to exceed 2 minutes, they will withstand without mechanical injury overspeeds above synchronous speed in accordance with the following table. During this overspeed condition the machine is not electrically connected to the supply.

Synchronous Speed, Rpm	Overspeed, Percent of Synchronous Speed
1801 and over	20
1800 and below	25

20.45 VARIATIONS FROM RATED VOLTAGE AND RATED FREQUENCY

20.45.1 Running

Induction machines shall operate successfully under running conditions at rated load with a variation in the voltage or the frequency up to the following:

a. Plus or minus 10 percent of rated voltage, with rated frequency
b. Plus or minus 5 percent of rated frequency, with rated voltage
c. A combined variation in voltage and frequency of 10 percent (sum of absolute values) of the rated values, provided the frequency variation does not exceed plus or minus 5 percent of rated frequency.

Performance within these voltage and frequency variations will not necessarily be in accordance with the standards established for operation at rated voltage and frequency.

20.45.2 Starting

20.45.2.1 Standard ▲

Induction machines shall start and accelerate to running speed a load which has a torque characteristic not exceeding that listed in 20.41 and an inertia value not exceeding that listed in 20.42 with the voltage and frequency variations specified in 20.45.1.

20.45.2.2 Low Voltage Option ▲

When low voltage starting is specified, induction machines shall start and accelerate to running speed a load which has a torque characteristic not exceeding that listed in 20.41 and an inertia value not exceeding that listed in 20.42 with the following voltage and frequency variations:

a. -15 percent of rated voltage with rated frequency
b. ±5 percent of rated frequency, with rated voltage
c. A combined variation in voltage and frequency of 15 percent (sum of absolute values) of the rated values, provided the frequency variation does not exceed ±5 percent of rated frequency.

20.45.3 For loads with other characteristics, the starting voltage and frequency limits may be different. The limiting values of voltage and frequency under which an induction machine will successfully start and accelerate to running speed depend on the margin between the speed-torque curve of the induction machine at rated voltage and frequency and the speed-torque curve of the load under starting conditions. Since the torque developed by the induction machine at any speed is approximately proportional to the square of the voltage and inversely proportional to the square of the frequency it is generally desirable to determine what voltage and frequency variations will actually occur at each installation, taking into account any voltage drop resulting from the starting current drawn by the machine. This information and the torque requirements of the driven (or driving) machine define the machine speed-torque curve, at rated voltage and frequency, which is adequate for the application.

Copyright National Electrical Manufacturers Association
Provided by IHS under license with NEMA
No reproduction or networking permitted without license from IHS

Not for Resale

20.46 OPERATION OF INDUCTION MACHINES FROM VARIABLE-FREQUENCY OR VARIABLE-VOLTAGE POWER SUPPLIES, OR BOTH

Induction machines to be operated from solid-state or other types of variable-frequency or variable-voltage power supplies, or both, for adjustable-speed applications may require individual consideration to provide satisfactory performance. Especially for operation below rated speed, it may be necessary to reduce the machine rating to avoid overheating. The induction machine manufacturer should be consulted before selecting a machine for such applications.

20.47 TESTS

20.47.1 Test Methods

The method of testing polyphase induction machines shall be in accordance with the following.

a. IEEE Std 112
b. All tests shall be made by the manufacturer. (The order of listing does not necessarily indicate the sequence in which the tests shall be made.)
c. Multispeed machines shall be tested at each speed.

20.47.2 Routine Tests on Machines Completely Assembled in Factory

The following tests shall be made on machines completely assembled in the factory and furnished with shaft and complete set of bearings.

a. Measurement of winding resistance
b. No-load motoring readings of current, power, and nominal speed at rated voltage and frequency. On 50-hertz machines, these readings shall be permitted to be taken at 60 hertz.
c. Measurement of open-circuit voltage ratio on wound-rotor machines
d. High-potential test in accordance with 20.48

20.47.3 Routine Tests on Machines Not Completely Assembled in Factory

The following factory tests shall be made on all machines not completely assembled in the factory.

a. Measurement of winding resistance
b. High-potential test in accordance with 20.48

20.48 HIGH-POTENTIAL TESTS

20.48.1 Safety Precautions and Test Procedure

See 3.01.

20.48.2 Test Voltage—Primary Windings

The test voltage shall be an alternating voltage whose effective value is 1000 volts plus twice the rated voltage of the machine.[1]

20.48.3 Test Voltage—Secondary Windings of Wound Rotors

The test voltage shall be an alternating voltage whose effective value is 1000 volts plus twice the maximum voltage which will appear between slip rings on open-circuit with rated voltage on the primary and with the rotor either at standstill or at any speed and direction of rotation (with respect to the rotating magnetic field) required by the application for which the machine was designed.1

20.49 MACHINE WITH SEALED WINDINGS—CONFORMANCE TESTS

An alternating-current squirrel-cage machine with sealed windings shall be capable of passing the following tests.

20.49.1 Test for Stator Which Can Be Submerged

After the stator winding is completed, join all leads together leaving enough length to avoid creepage to terminals and perform the following tests in the sequence indicated.

a. The sealed stator shall be tested while all insulated parts are submerged in a tank of water containing a wetting agent. The wetting agent shall be non-ionic and shall be added in a proportion sufficient to reduce the surface tension of water to a value of 31 dyn/cm (3.1 μN/m) or less at 25°C.
b. Using 500 volts direct current, take a 10-minute insulation resistance measurement. The insulation resistance value shall not be less than the minimum recommended in IEEE Std 43. (Insulation resistance in megohms ≥ machine rated kilovolts plus 1.)
c. Subject the winding to a 60-hertz high-potential test of 1.15 times the rated line-to-line rms voltage for 1 minute. Water must be at ground potential during this test.
d. Using 500 volts direct current, take a 1 minute insulation resistance measurement. The insulation resistance value shall be not less than the minimum recommended in IEEE Std 43. (Insulation resistance in megohms ≥ machine rated kilovolts plus 1.)
e. Remove winding from water, rinse if necessary, dry, and apply other tests as may be required.

---

[1] A direct instead of an alternating voltage is sometimes used for high-potential test on primary windings of machines rated 6000 volts or higher. In such cases, a test voltage equal to 1.7 times the alternating-current test voltage (effective value) as given in 20.48.2 and 20.48.3 is recommended. Following a direct-voltage high-potential test, the tested winding should be thoroughly grounded. The insulation rating of the winding and the test level of the voltage applied determine the period of time required to dissipate the charge and, in many cases, the ground should be maintained several hours to dissipate the charge to avoid hazard to personnel

Copyright National Electrical Manufacturers Association
Provided by IHS under license with NEMA
No reproduction or networking permitted without license from IHS
Not for Resale

20.49.2 Test for Stator Which Cannot Be Submerged

When the wound stator, because of its size or for some other reason, cannot be submerged, the tests shall be performed as follows.

a. Spray windings thoroughly for one-half hour with water containing a wetting agent. The wetting agent shall be non-ionic and shall be added in a proportion sufficient to reduce the surface tension of water to a value of 31 dyn/cm (3.1 μN/m) or less at 25°C.
b. Using 500 volts direct current, take a 10-minute insulation resistance measurement. The insulation resistance value shall not be less than the minimum recommended in IEEE Std 43. (Insulation resistance in megohms machine rated kilovolts plus 1.)
c. Subject the winding to a 60-hertz high-potential test of 1.15 times the rated line-to-line rms voltage for 1 minute.
d. Using 500 volts direct current, take a 1-minute insulation resistance measurement. The insulation resistance value shall be not less than the minimum recommended in IEEE Std 43. (Insulation resistance in megohms ≥ machine rated kilovolts plus 1.)
e. Rinse winding if necessary, dry, and apply other tests as may be required.

20.50 MACHINE SOUND

20.50.1 Sound Quality

Sound quality is determined by the distribution of effective sound intensities as a function of frequency. It plays a significant role in determining how acceptable the sound is to the human ear.

Although the overall A-weighted sound does not completely define sound acceptability because machines with the same overall decibel sound level may have a different sound quality, it does provide a quantitative measure of loudness and hearing damage potential. It may be necessary, in some cases, to describe the sound profile in more detail. In such cases, the manufacturer should be consulted.

20.50.2 Sound Measurement

Machine sound should be measured in accordance with IEEE Std 85.

Sound tests should be taken with the induction machine operating as a motor at no load so that the induction machine sound can be isolated from other sound sources.

It should be recognized that decibel readings are not exact and are subject to many external influences. For further information see NEMA Standards Publication No. MG 3.

20.50.3 Sound Power Levels of Polyphase Squirrel-Cage Induction Machines

The no-load overall sound power level (dBA re 10^{-12} watts) of polyphase squirrel-cage machines covered by this Part 20 generally do not exceed the values shown in Table 20-2 when measured in accordance with IEEE Std 85. The values are for machines operating at 60 hertz. Machines with additional degrees of enclosure or various types of acoustic treatment, or both, may have lower values of sound power level than the values shown.

The numerical values mean sound pressure level (dBA re 20 μ Pa), as determined by IEEE Std 85, will be typically

Table 20-2
SOUND POWER LEVELS

Rated Horsepower	Rated Kilowatts	Speed, Rpm	Overall Sound Power Level Decibels, A-Weighted (Reference: 10^{-12} Watts)		
			Dripproof	Totally Enclosed Fan-Cooled	Weather-Protected Type II
200–250	150–200	3600	...	107	...
300–450	250–350	3600	107	110	102
500–800	400–600	3600	110	113	105
900–1500	700–1000	3600	111	116	106
1750–2500	1250–2000	3600	112	118	107
3000–5000	2250–3500	3600	114	120	109
200–	150–	1800	...	103	...
250–400	200–300	1800	103	105	99
450–700	350–500	1800	106	108	102
800–1250	600–900	1800	108	111	104
1500–2250	1000–1750	1800	109	113	105
2500–4000	2000–3000	1800	110	115	106
150–	125–	1200	96	98	...
200–350	150–250	1200	99	100	97
400–700	300–500	1200	102	103	99
800–1250	600–900	1200	105	106	101
1500–2500	1000–2000	1200	107	109	103
3000–3500	2250–2500	1200	109	111	105
125–	100–	900–600	93	96	92
150–250	125–200	900–600	95	97	92
350–400	250–300	900–600	98	100	96
450–700	350–500	900–600	99	102	98
800–1250	600–900	900–600	101	105	100
1500–2250	1000–1750	900–600	103	107	102

Copyright National Electrical Manufacturers Association
Provided by IHS under license with NEMA
No reproduction or networking permitted without license from IHS

Not for Resale

lower than corresponding values of sound power level in accordance with the following table.

Distance from Major Machine Surface, Motors	Typical Reductions in Decibels from Sound Power Level to Yield Mean Sound Pressure Level
1	10–13
2	15–18

20.51 REPORT OF TEST FORM FOR INDUCTION MACHINES

For typical test forms, see IEEE Std 112.

20.52 EFFICIENCY

Efficiency and losses shall be determined in accordance with IEEE Std 112. Unless otherwise specified, the stray-load loss shall be determined by direct measurement (test loss minus conventional loss).

When using Method B, Dynamometer, efficiency shall be determined by loss segregation including the smoothing of stray-load loss as outlined in IEEE 112.

The following losses shall be included in determining the efficiency.

a. Stator I^2R
b. Rotor I^2R
c. Core loss
d. Stray load loss[1]
e. Friction and windage loss[2]
f. Power required for auxiliary items such as external pumps or fans necessary for the operation of the machine shall be stated separately.

In determining I^2R losses, the resistance of each winding shall be corrected to a temperature equal to an ambient temperature of 25°C plus the observed rated-load temperature rise measured by resistance. When the rated-load temperature rise has not been measured, the resistance of the winding shall be corrected to the following temperature.

Class of Insulation System	Temperature, Degrees C
A	75
B	95
F	115
H	130

This reference temperature shall be used for determining I^2R losses at all loads. If the rated temperature rise is specified as that of a lower class of insulation system, temperature for resistance correction shall be that of the lower insulation class.

20.53 MECHANICAL VIBRATION ▲

See MG 1, Part 7.

20.54 METHOD OF MEASURING THE MACHINE VIBRATION ▲

Text deleted.

20.55 REED FREQUENCY OF VERTICAL MACHINES

20.55.1 In a single degree of freedom system, the static deflection of the mass (Δ_s, inches) is related to the resonant frequency of the system (f_n, cycles per minute) as follows.

$$f_n = 187.6\sqrt{\frac{1}{\Delta_s}}$$

20.55.2 Vertical or other flange-mounted induction machines are frequently mounted on some part of the driven (or driving) machine such as a pump adapter. The resulting system may have a radial resonant frequency (reed frequency) the same order of magnitude as the rotational speed of the induction machine. This system frequency can be calculated from the preceding equation. When the resonant frequency of the system is too close to the rotational speed, a damaging vibration level may result.

20.55.3 The vertical induction machine manufacturer should supply the following information to aid in determining the system resonant frequency, f_n.

a. Machine weight
b. Center of gravity location—This is the distance from the machine mounting flange to the center of gravity of the machine.
c. Machine static deflection—This is the distance the center of gravity would be displaced downward from its original position if the machine were horizontally mounted. This value assumes that the machine uses its normal mounting and fastening means but that the foundation to which it is fastened does not deflect.

[1] In the event stray-load loss is not measured, the value of stray-load loss at rated load shall be assumed to be 1.2 percent of the rated output for motors rated less than 2500 horsepower (2000 kW for induction generators) and 0.9 percent for motors rated at 2500 horsepower (2000 kW for induction generators) and greater. For other than rated load, it shall be assumed that the stray-load loss varies as the square of the rotor current.

[2] In the case of induction machines furnished with thrust bearings, only that portion of the thrust bearing loss produced by the machine itself shall be included in the efficiency calculation. Alternatively, a calculated value of efficiency, including bearing loss due to external thrust load, shall be specified.
In the case of induction machines furnished with less than a full set of bearings, friction and windage losses which are representative of the actual installation shall be determined by (1) calculation or (2) experience with shop test bearings and shall be included in the efficiency calculations.

Copyright National Electrical Manufacturers Association
Provided by IHS under license with NEMA
No reproduction or networking permitted without license from IHS
Not for Resale

20.56 EFFECTS OF UNBALANCED VOLTAGES ON THE PERFORMANCE OF POLYPHASE SQUIRREL-CAGE INDUCTION MOTORS

When the line voltages applied to a polyphase induction motor are not equal, unbalanced currents in the stator windings will result. A small percentage voltage unbalance will result in a much larger percentage current unbalance. Consequently, the temperature rise of the motor operating at a particular load and percentage voltage unbalance will be greater than for the motor operating under the same conditions with balanced voltages.

Voltages should be evenly balanced as closely as can be read on a voltmeter. If the voltages are unbalanced, the rated horsepower of polyphase squirrel-cage induction motors should be multiplied by the factor shown in Figure 20-2 to reduce the possibility of damage to the motor.[1] Operation of the motor with more than a 5-percent voltage unbalance is not recommended.

When the derating curve of Figure 20-2 is applied for operation on unbalanced voltages, the selection and setting of the overload device should take into account the combination of the derating factor applied to the motor and the increase in current resulting from the unbalanced voltages. This is a complex problem involving the variation in motor current as a function of load and voltage unbalance in addition to the characteristics of the overload device relative to $I_{maximum}$ or $I_{average}$. In the absence of specific information it is recommended that overload devices be selected or adjusted, or both, at the minimum value that does not result in tripping for the derating factor and voltage unbalance that applies. When the unbalanced voltages are anticipated, it is recommended that the overload devices be selected so as to be responsive to $I_{maximum}$ in preference to overload devices responsive to $I_{average}$.

20.56.1 Effect on Performance—General

The effect of unbalanced voltages on polyphase induction motors is equivalent to the introduction of a "negative sequence voltage" having a rotation opposite to that occurring with balanced voltages. This negative-sequence voltage produces an air gap flux rotating against the rotation of the rotor, tending to produce high currents. A small negative-sequence voltage may produce current in the windings considerably in excess of those present under balanced voltage conditions.

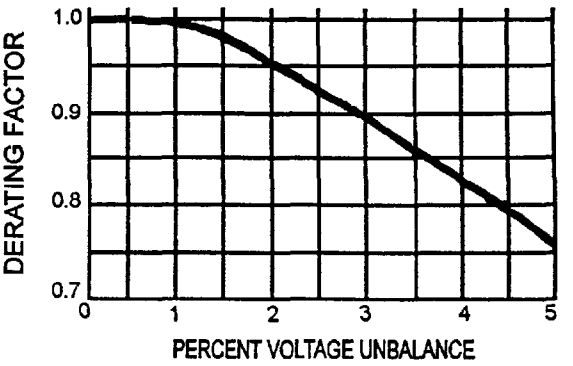

Figure 20-2
POLYPHASE SQUIRREL-CAGE INDUCTION MOTORS DERATING FACTOR DUE TO UNBALANCED VOLTAGE

20.56.2 Voltage Unbalance Defined

The voltage unbalance in percent may be defined as

$$\text{percent voltage unbalance} = 100 \times \frac{\text{maximum voltage deviation from average voltage}}{\text{average voltage}}$$

EXAMPLE—With voltage of 2300, 2220, and 2185, the average is 2235, the maximum deviation from the average is 65, the percentage unbalance $= 100 \times {}^{65}/_{2235} = 2.9$ percent.

20.56.3 Torques

The locked-rotor torque and breakdown torque are decreased when the voltage is unbalanced. If the voltage unbalance is extremely severe, the torques might not be adequate for the application.

20.56.4 Full-Load Speed

The full-load speed is reduced slightly when the motor operates at unbalanced voltages.

20.56.5 Currents

The locked-rotor current will be unbalanced to the same degree that the voltages are unbalanced but the locked rotor kVA will increase only slightly.

The currents at normal operating speed with unbalanced voltages will be greatly unbalanced in the order of 6 to 10 times the voltage unbalance.

[1]The derating factor shown in Figure 20-2 is applicable only to motors with normal starting torque, i.e., motors typically intended for service with centrifugal pumps, fans, compressors, etc., where the required starting or pull-up torque, or both, is less than 100 percent of rated full-load torque. For motors with other torque characteristics, the motor manufacturer should be consulted.

Copyright National Electrical Manufacturers Association
Provided by IHS under license with NEMA
No reproduction or networking permitted without license from IHS
Not for Resale

MANUFACTURING

20.60 NAMEPLATE MARKING ▲

The following information shall be given on all nameplates. For abbreviations, see 1.80. For some examples of additional information that may be included on the nameplate see 20.60.5.

20.60.1 Alternating-Current Polyphase Squirrel-Cage Motors

a. Manufacturer's type and frame designation
b. Horsepower output
c. Time rating
d. Temperature rise[1]
e. Rpm at rated load
f. Frequency
g. Number of phases
h. Voltage
i. Rated-load amperes
j. Code letter (see 20.40A)
k. Service factor

20.60.2 Polyphase Wound-Rotor Motors

a. Manufacturer's type and frame designation
b. Horsepower output
c. Time rating
d. Temperature rise[1]
e. Rpm at rated load
f. Frequency
g. Number of phases
h. Voltage
i. Rated-load amperes
j. Secondary amperes at full load
k. Secondary voltage
l. Service factor

20.60.3 Polyphase Squirrel-Cage Generators

a. Manufacturer's type and frame designation
b. Kilowatt rating
c. Time rating
d. Temperature rise[1]
e. Rpm at rated load
f. Frequency
g. Number of phases
h. Voltage
i. Rated-load amperes

20.60.4 Polyphase Wound-Rotor Generators

a. Manufacturer's type and frame designation
b. Kilowatt rating
c. Time rating
d. Temperature rise[1]
e. Rpm at rated load
f. Frequency
g. Number of phases
h. Voltage
i. Rated-load amperes
j. Secondary amperes at full speed
k. Secondary voltage

20.60.5 Additional Nameplate Information

Some examples of additional nameplate information:

a. Enclosure or IP code
b. Manufacturer's name, mark, or logo
c. Manufacturer's plant location
d. Serial number or date of manufacture

20.61 TOLERANCE LIMITS IN DIMENSIONS

The dimensions from the shaft center to the bottom of the feet shall be not greater than the dimensions shown on the manufacturer's dimension sheet. When the induction machine is coupled or geared to the driven (or driving) machines, shims are usually required to secure accurate alignment.

20.62 MOTOR TERMINAL HOUSINGS AND BOXES

20.62.1 When induction machines covered by this Part 20 are provided with terminal housings for line cable connections,[2] the minimum dimensions and usable volume shall be as indicated in Table 20-3 for Type I terminal housings or Figure 20-3 for Type II terminal housings.

Unless otherwise specified, when induction machines are provided with terminal housings, a Type I terminal housing shall be supplied.

For machines rated 601 volts and higher, accessory leads shall terminate in a terminal box or boxes separate from the machine terminal housing. As an exception, current and potential transformers located in the machine terminal housing shall be permitted to have their secondary connections terminated in the machine terminal housing if separated from the machine leads by a suitable physical barrier.

---

[1] As an alternative marking, this item shall be permitted to be replaced by the following.
a. Maximum ambient temperature for which the machine is designed (see 20.40, Note).
b. Insulation system designation (if stator and rotor use different classes of insulation systems, both insulation systems shall be given, that for the stator being given first).

[2] Terminal housings containing stress cones, surge capacitors, surge arresters, current transformers, or potential transformers require individual consideration.

Copyright National Electrical Manufacturers Association
Provided by IHS under license with NEMA
No reproduction or networking permitted without license from IHS
Not for Resale

Table 20-3 ▲
TYPE I TERMINAL HOUSING
UNSUPPORTED AND INSULATED TERMINATIONS

Voltage	Maximum Full-Load Current	Minimum Usable Volume, Cubic Inches	Minimum Internal Dimension, Inches	Minimum Centerline Distance,* Inches
0–600	400	900	8	...
	600	2000	8	...
	900	3200	10	...
	1200	4600	14	...
601–2400	160	180	5	...
	250	330	6	...
	400	900	8	...
	600	2000	8	12.6
	900	3200	10	12.6
	1500	3940	14	20.1
2401–4800	160	2000	8	12.6
	700	5600	14	16
	1000	8000	16	20
	1500	10740	20	25
	2000	13400	22	28.3
4801–6900	260	5600	14	16
	680	8000	16	20
	1000	9400	18	25
	1500	11600	20	25
	2000	14300	22	28.3
6901–13800	400	44000	22	28.3
	900	50500	25	32.3
	1500	56500	27.6	32.3
	2000	62500	30.7	32.3

*Minimum distance from the entrance plate for conduit entrance to the centerline of machine leads.

housing shall be permitted to have their secondary connections terminated in the machine terminal housing if separated from the machine leads by a suitable physical barrier.

For machines rated 601 volts and higher, the termination of leads of accessory items normally operating at a voltage of 50 volts (rms) or less shall be separated from leads of higher voltage by a suitable physical barrier to prevent accidental contact or shall be terminated in a separate box.

20.63 EMBEDDED TEMPERATURE DETECTORS

Embedded temperature detectors are resistance temperature detectors or thermocouples built into the machine during construction at points which are inaccessible after the machine is built.

Unless otherwise specified, when machines are equipped with embedded detectors they shall be of the resistance temperature detector type. The resistance element shall have a minimum width of 0.25 inch, and the detector length shall be approximately as follows.

Core Length, Inches	Approximate Detector Length, Inches
12 or less	6
Greater than 12 and less than 40	10
40 or greater	20

As a minimum, the number of detectors shall equal the number of phases for which the machine is wound, i.e., three detectors for a three-phase machine. The detectors shall be suitably distributed around the circumference, located between the coil sides, and in positions having normally the highest temperature along the length of the slot.

The detector shall be located in the center of the slot (with the respect to the slot width) and in intimate contact with the insulation of both the upper and lower coil sides whenever possible; otherwise, it shall be in contact with the insulation of the upper coil side (that is, the coil side

Copyright National Electrical Manufacturers Association
Provided by IHS under license with NEMA
No reproduction or networking permitted without license from IHS
Not for Resale

nearest the air gap). Each detector shall be installed, and its leads brought out, so that the detector is effectively protected from contact with the cooling medium. If the detector does not occupy the full length of the core, suitable packing shall be inserted between the coils to the full length of the core to prevent the cooling medium from directly contacting the detector.

APPLICATION DATA

20.80 SERVICE CONDITIONS

20.80.1 General

Induction machines should be properly selected with respect to their service conditions, usual or unusual, both of which involve the environmental conditions to which the machine is subjected and the operating conditions.

Machines conforming to this Part 20 are designed for operation in accordance with their ratings under usual service conditions. Some machines may also be capable of operating in accordance with their ratings under one or more unusual service conditions. Definite-purpose or special-purpose machines may be required for some unusual conditions.

Service conditions, other than those specified as usual, may involve some degree of hazard. The additional hazard depends upon the degree of departure from usual operating conditions and the severity of the environment to which the machine is exposed. The additional hazard results from such things as overheating, mechanical failure, abnormal deterioration of the insulation system, corrosion, fire, and explosion.

Although experience of the user may often be the best guide, the manufacturer of the driven (or driving) equipment and the induction machine manufacturer should be consulted for further information regarding any unusual service conditions which increase the mechanical or thermal duty on the machine and, as a result, increase the chances for failure and consequent hazard. This further information should be considered by the user, his consultants, or others most familiar with the details of the application involved when making the final decision.

	Minimum Dimensions (Inches)									
Machine Voltage	L	W	D	A	B	C	X	E	F	G
460-600	24	18	18	9½	8½	4	5	2½	4	12
2300-4800	26	27	18	9½	8½	5½	8	3½	5	14
6600-6900	36	30	18	9½	8½	6	9	4	6	30
13200-13800	48	48	25	13½	11½	8½	13½	6¾	9½	36

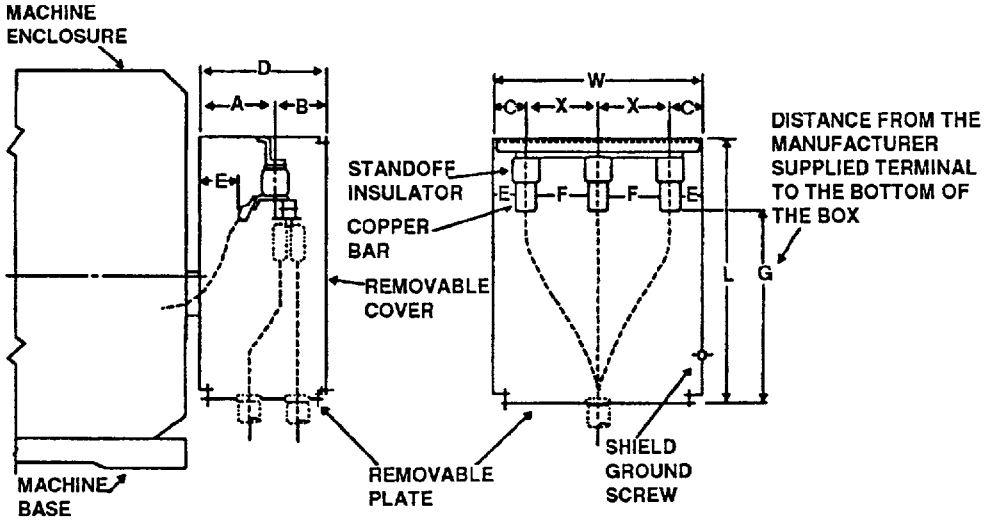

Figure 20-3
TYPE II MACHINE TERMINAL HOUSING STANDOFF-INSULATOR-SUPPORTED INSULATED OR UNINSULATED TERMINATIONS

Copyright National Electrical Manufacturers Association
Provided by IHS under license with NEMA
No reproduction or networking permitted without license from IHS
Not for Resale

20.80.2 Usual Service Conditions ▲

Usual service conditions include the following:

a. Exposure to an ambient temperature in the range of -15°C to 40°C or, when water cooling is used, an ambient temperature range of 5°C (to prevent freezing of water) to 40°C, except for machines other than water cooled having slip rings for which the minimum ambient temperature is 0°C.
b. An altitude not exceeding 3300 feet (1000 meters).
c. A location and supplementary enclosure, if any, such that there is no serious interference with the ventilation of the machine.

20.80.3 Unusual Service Conditions

The manufacturer should be consulted if any unusual service conditions exist which may affect the construction or operation of the machine. Among such conditions are:

a. Exposure to:
   1. Combustible, explosive, abrasive, or conducting dusts
   2. Lint or very dirty operating conditions where the accumulation of dirt will interfere with normal ventilation
   3. Chemical fumes, flammable or explosive gases
   4. Nuclear radiation
   5. Steam, salt-laden air, or oil vapor
   6. Damp or very dry locations, radiant heat, vermin infestation, or atmospheres conducive to the growth of fungus
   7. Abnormal shock, vibration, or mechanical loading from external sources
   8. Abnormal axial or side thrust imposed on the machine shaft
b. Operation where:
   1. There is excessive departure from rated voltage or frequency, or both (see 20.45).
   2. The deviation factor of the alternating-current supply voltage exceeds 10 percent.
   3. The alternating-current supply voltage is unbalanced by more than 1 percent (see 20.56).
   4. Low noise levels are required.
   5. The power system is not grounded (see 20.91).
c. Operation at speeds other than the rated speed (see 20.45)
d. Operation in a poorly ventilated room, in a pit, or in an inclined position
e. Operation where subjected to:
   1. Torsional impact loads
   2. Repetitive abnormal overloads
   3. Reversing or electric braking
   4. Frequent starting (see 20.43)
   5. Out-of-phase bus transfer (see 20.85)
   6. Frequent short circuits

20.81 END PLAY AND ROTOR FLOAT FOR COUPLED SLEEVE BEARING HORIZONTAL INDUCTION MACHINES

Operating experience on horizontal sleeve bearing induction machines has shown that sufficient thrust to damage bearings may be transmitted to the induction machine through a flexible coupling. Damage to induction machine bearings due to thrusts under such conditions will be avoided if the following limits are observed by the induction machine manufacturer and the driven (or driving) equipment/induction machine assembler:

20.81.1 Where induction machines are provided with sleeve bearings, the machine bearings and limited-end-float coupling should be applied as indicated in the following table.

Machine Hp (kW)	Synchronous Speed, Rpm	Min Motor Rotor End Float, Inches	Max. Coupling End Float,* Inches
500 (400) and below	1800 and below	0.25	0.09
300 (250) to 500 (400) incl.	3600 and 3000	0.50	0.19
600 (500) and higher	all speeds	0.50	0.19

*Couplings with elastic axial centering forces are usually satisfactory without these precautions.

20.81.2 To facilitate the assembly of driven (or driving) equipment and sleeve bearing induction machines, the induction machine manufacturer should:

a. Indicate on the induction machine outline drawing the minimum machine rotor end play in inches.
b. Mark rotor end play limits on machine shaft.

Note—The induction machine and the driven (or driving) equipment should be assembled and adjusted at the installation site so that there will be some endwise clearance in the induction machine bearing under all operating conditions. The difference between the rotor end play and the end float in the coupling allows for expansion and contraction in the driven (or driving) equipment, for clearance in the driven (or driving) equipment thrust bearing, for endwise movement in the coupling, and for assembly.

20.82 PULSATING STATOR CURRENT IN INDUCTION MOTORS

When the driven load, such as that of reciprocating type pumps, compressors, etc., requires a variable torque during each revolution, it is recommended that the combined installation have sufficient inertia in its rotating parts to limit the variations[1] in motor stator current to a value not exceeding 66 percent of full-load current.

[1]The basis for determining this variation should be by oscillograph or similar measurement and not by ammeter readings. A line should be drawn on

Copyright National Electrical Manufacturers Association
Provided by IHS under license with NEMA
No reproduction or networking permitted without license from IHS
Not for Resale

20.83 ASEISMATIC CAPABILITY

20.83.1 The susceptibility of induction machines to earthquake damage is particularly influenced by their mounting structures. Therefore, the aseismatic capability requirements for induction machines should be based on the response characteristics of the system consisting of the induction machine and mounting structure or equipment on which the induction machine will be mounted when subjected to the specified earthquake ground motions.

20.83.2 System aseismatic capability requirements should preferably be given in terms of the peak acceleration which a series of "single-degree-of-freedom" oscillators, mounted on the induction machine support structure system, would experience during the specified earthquake. A family of continuous plots of peak acceleration versus frequency over the complete frequency range and for various values of damping is referred to as a "frequency response spectrum" for the induction machine and support structure system. This frequency response spectrum should be utilized by those responsible for the system or mounting structure, or both, to determine the aseismatic capability requirement which is to be applied to the induction machine alone when it is mounted on its supporting structure. The induction machine manufacturer should furnish the required data for induction machine natural frequency or mass stiffness, or both, to allow this determination to be made.

20.83.3 Induction machine aseismatic capability requirements should preferably be stated as a single acceleration or "g" value as determined from the system structural characteristics and input data as outlined in 20.83.1 and 20.83.2.

20.83.4 For induction machines covered by this Part 20, it is recommended that the supporting base structure for the induction machine limit the peak acceleration due to earthquakes to the following maximum values.

a. One and one-half g's in any direction
b. One g vertically upward and downward in addition to the normal downward gravity of one g

The loads imposed as a result of the foregoing inputs can be assumed to have negligible effect upon the operation of the induction machine.

NOTES

1—Accelerations are given in g's or multiples of the "standard" gravitational acceleration (32.2 ft/sec^2) (9.81 meters/sec^2) and are based on an assumed damping factor of 1 percent. Horizontal and vertical accelerations are assumed to act individually but not simultaneously.

2—The axial restraint of the shaft in most horizontal applications is provided by the driven (or driving) equipment or other devices external to the induction machine. In such cases, the axial seismic loading of the shaft should be included in the requirements for the driven (or driving) equipment. In other applications, restraint of the driven (or driving) equipment rotor may be provided by the induction machine. In such cases, the axial seismic loading of the shaft should be included in the requirements for the induction machine.

3—When a single g value is given, it is implied that this g value is the maximum value of peak acceleration on the actual frequency response curve for the induction machine when mounted on its supporting structure for a particular value of system structural damping and specified earthquake ground motion. Values for other locations are frequently inappropriate because of nonrigid characteristics of the intervening structure.

20.84 BELT, CHAIN, AND GEAR DRIVE

When induction machines are for belt, chain, or gear drive, the manufacturer should be consulted.

20.85 BUS TRANSFER OR RECLOSING

Induction machines are inherently capable of developing transient current and torque considerably in excess of rated current and torque when exposed to an out-of-phase bus transfer or momentary voltage interruption and reclosing on the same power supply. The magnitude of this transient torque may range from 2 to 20 times rated torque and is a function of the machine, operating conditions, switching time, rotating system inertias and torsional spring constants, number of motors on the bus, etc.

20.85.1 Slow Transfer or Reclosing

A slow transfer or reclosing is defined as one in which the length of time between disconnection of the motor from the power supply and reclosing onto the same or another power supply is equal to or greater than one and a half motor open-circuit alternating-current time constant (see 1.61).

It is recommended that slow transfer or reclosing be used so as to limit the possibility of damaging the motor or driven (or driving) equipment or both. This time delay permits a sufficient decay in rotor flux linkages so that the transient current and torque associated with the bus transfer or reclosing will remain within acceptable levels. When several motors are involved, the time delay should be based on one and a half times the longest open-circuit time constant of any motor on the system being transferred or reclosed.

20.85.2 Fast Transfer or Reclosing

A fast transfer or reclosing is defined as one which occurs within a time period shorter than one and a half open-circuit alternating-current constant. In such cases transfer or reclosure should be timed to occur when the difference between the motor residual voltage and frequency, and the incoming system voltage and frequency will not result in damaging transients.

The rotating masses of motor-load system, connected by elastic shafts, constitute a torsionally responsive mechani-

---

full-load current of the motor. (The maximum value of the motor stator current is to be assumed as 1.41 times the rated full-load current.)

Copyright National Electrical Manufacturers Association
Provided by IHS under license with NEMA
No reproduction or networking permitted without license from IHS
Not for Resale

NEMA MG*1 93 ■ 6470247 0506803 330 ■

cal system which is excited by the motor electro-magnetic (air gap) transient torque that consists of the sum of an exponentially decaying unidirectional component and exponentially decaying oscillatory components at several frequencies, including power frequency and slip frequency. The resultant shaft torques may be either attenuated or amplified with reference to the motor electromagnetic (air-gap) torque, and for this reason it is recommended that the electromechanical interactions of the motor, the driven equipment, and the power system be studied for any system where fast transfer or reclosure is used.

The electrical and mechanical parameters required for such a study will be dependent upon the method of analysis and the degree of detail employed in the study. When requested, the motor manufacturer should furnish the following and any other information as may be required for the system study.

a. Reactances and resistances for the electrical equivalent circuit for the motor, as depicted in Figure 1-6, for both unsaturated and saturated (normal slip frequency) condition
b. Wk^2 of the motor rotor
c. Spring constant of the motor shaft

20.86 POWER FACTOR CORRECTION

WARNING—When power factor correction capacitors are to be switched with an induction machine, the maximum value of corrective kVAR should not exceed the value required to raise the no-load power factor to unity. Corrective kVAR in excess of this value may cause overexcitation resulting in high transient voltages, currents, and torques that can increase safety hazards to personnel and can cause possible damage to the machine or to the driven (or driving) equipment. For applications where overspeed of the machine is contemplated (i.e., induction generators, paralleled centrifugal pumps without check valves), the maximum corrective kVAR should be further reduced by an amount corresponding to the square of the expected overspeed.

a. The maximum value of corrective kVAR to be switched with an induction machine can be calculated as follows.

$$\text{kVAR} \leq \frac{0.9 \times I_{nl} \times E \times \sqrt{3}}{1000 \times (1 + OS)^2}$$

Where:

I_{nl} = No-load current at rated voltage
E = Rated voltage
OS = Per unit maximum expected overspeed

b. The use of capacitors for power factor correction, switched at the motor terminals, is not recommended for machines subjected to high speed bus transfer or reclosing, elevator motors, multi-speed motors, motors used on plugging or jogging applications, and motors used with open transition autotransformer or wye delta starting. For such applications the machine manufacturer should be consulted before installing power factor corrective capacitors switched with the machine.

Closed transition autotransformer starters may introduce a large phase shift between the supply voltage and the motor internal voltage during the transition period when the autotransformer primary is in series with the motor winding. To minimize the resultant transient current and torque when the autotransformer is subsequently shorted out, capacitors for power factor correction should be connected on the line side of the autotransformer.

20.87 SURGE CAPABILITIES OF AC WINDINGS WITH FORM-WOUND COILS

Stator winding insulation systems of ac machines are exposed to stresses due to the steady state operating voltages and to steep-fronted voltage surges of high amplitudes. Both types of voltages stress the ground insulation. The steep-fronted surge also stresses the turn insulation. If the rise time of the surge is steep enough (0.1 to 0.2 μsec), most of the surge could appear across the first or line coil and its distribution in the coil could be non-linear.

20.87.1 The steep-fronted surges appearing across the motor terminals are caused by lightning strikes, normal circuit breaker operation, motor starting, aborted starts, bus transfers, switching windings (or speeds) in two-speed motors, or switching of power factor correction capacitors. Turn insulation testing itself also imposes a high stress on the insulation system.

20.87.2 The crest value and rise time of the surge at the motor depends on the transient event taking place, on the electrical system design, and on the number and characteristics of all other devices in the system. These include, but are not limited to, the motor, the cables connecting the motor to the switching device, the type of switching device used, the length of the busbar and the number and sizes of all other loads connected to the same busbar.

20.87.3 Although certain surge withstand capability levels must be specified for the windings, it is desirable, because of the unpredictable nature of the surge magnitudes and rise times, that for critical applications surge protection devices be installed at or very close to the motor terminals to slope back the rise of the incoming surge thereby making it more evenly distributed across the entire winding.

20.87.4 Stator windings of ac machines, unless otherwise specified, shall be designed to have a surge withstand capability of 2 pu (per unit) at a rise time of 0.1 to 0.2 μs and 4.5 pu at 1.2 μs, or longer, where one pu is the crest of the rated motor line-to-ground voltage, or

Copyright National Electrical Manufacturers Association
Provided by IHS under license with NEMA
No reproduction or networking permitted without license from IHS

Not for Resale

$$1 \text{ pu} = \sqrt{2/3} \times V_{L\text{-}L}$$

20.87.5 When higher surge capabilities are required, the windings shall be designed for a surge withstand capability of 3.5 pu at a rise time of 0.1 to 0.2 μs and 5 pu at a rise time of 1.2 μs or longer. This higher capability shall be by agreement between the customer and the manufacturer.

20.87.6 Unless otherwise agreed to between the customer and the manufacturer, the method of test and the test instrumentation used shall be per IEEE Std 522.

The test may be made at any of the following steps of manufacture.

a. On individual coils before installation in slots
b. On individual coils after installation in slots, prior to connection with stator slot wedging and endwinding support systems installed
c. On completely wound and finished stator

The actual step where testing is done shall be a matter of agreement between the customer and the manufacturer.

20.87.7 The test voltage steps at 20.87.6.a and 20.87.6.b shall be at least:

a. 65% of the values specified in 20.87.4 or 20.87.5 for unimpregnated coils
b. 80% of the values specified in 20.87.4 or 20.87.5 for resin-rich coils

20.91 MACHINES OPERATING ON AN UNGROUNDED SYSTEM

Alternating-current machines are intended for continuous operation with the neutral at or near ground potential. Operation on ungrounded systems with one line at ground potential should be done only for infrequent periods of short duration, for example as required for normal fault clearance. If it is intended to operate the machine continuously or for prolonged periods in such conditions, a special machine with a level of insulation suitable for such operation is required. The motor manufacturer should be consulted before selecting a motor for such an application.

Grounding of the interconnection of the machine neutral points should not be undertaken without consulting the System Designer because of the danger of zero-sequence components of currents of all frequencies under some operating conditions and the possible mechanical damage to the winding under line-to-neutral fault conditions.

Other auxiliary equipment connected to the motor such as, but not limited to, surge capacitors, power factor correction capacitors, or lightning arrestors, may not be suitable for use on an ungrounded system and should be evaluated independently.

20.92 OCCASIONAL EXCESS CURRENT

Induction motors while running and at rated temperature shall be capable of withstanding a current equal to 150 percent of the rated current for 30s.

Excess capacity is required for the coordination of the motor with the control and protective devices. The heating effect in the machine winding varies approximately as the product of the square of the current and the time for which this current is being carried. The overload condition will thus result in increased temperatures and a reduction in insulation life. The motor should therefore not be subjected to this extreme condition for more than a few times in its life.

Copyright National Electrical Manufacturers Association
Provided by IHS under license with NEMA
No reproduction or networking permitted without license from IHS
Not for Resale

Copyright National Electrical Manufacturers Association
Provided by IHS under license with NEMA
No reproduction or networking permitted without license from IHS

Not for Resale

NEMA MG*1 93 6470247 0506104 9T0

Section III
LARGE MACHINES
Part 21
LARGE MACHINES—SYNCHRONOUS MOTORS

(The standards in this Part 21 do not apply to nonexcited synchronous motors, nor do they necessarily apply to synchronous motors of motor-generator sets.)

RATINGS

21.0 SCOPE

The standards in this Part 21 of this Section III cover (1) synchronous motors built in frames larger than those required for synchronous motors having the continuous open-type ratings given in the table below, and (2) all ratings of synchronous motors of the revolving-field type of 450 rpm and slower speeds.

	Motors, Synchronous, Hp	
	Power Factor	
Synchronous Speed	Unity	0.8
3600	500	400
1800	500	400
1200	350	300
900	250	200
720	200	150
600	150	125
514	125	100

21.05 BASIS OF RATING

Synchronous motors covered by this Part 21 shall be rated on a continuous-duty basis unless otherwise specified. The output rating shall be expressed in horsepower available at the shaft at a specified speed, frequency, voltage, and power factor.

21.10 HORSEPOWER AND SPEED RATINGS

Horsepower Ratings				
20	600	6000	27500	
25	700	7000	30000	
30	800	8000	32500	
40	900	9000	35000	
50	1000	10000	37500	
60	1250	11000	40000	
75	1500	12000	45000	
100	1750	13000	50000	
125	2000	14000	55000	
150	2250	15000	60000	
200	2500	16000	65000	
250	3000	17000	70000	
300	3500	18000	75000	
350	4000	19000	80000	
400	4500	20000	90000	
450	5000	22500	100000	
500	5500	25000		
Speed Ratings, Rpm at 60 Hertz*				
3600	514	277	164	100
1800	450	257	150	95
1200	400	240	138	90
900	360	225	129	86
720	327	200	120	80
600	300	180	109	—

*At 50 hertz, the speeds are 5/6 of the 60-hertz speeds.

NOTE—It is not practical to build motors of all horsepower ratings at all speeds.

21.11 POWER FACTOR

The power factor for synchronous motors shall be unity or 0.8 leading (overexcited).

Copyright National Electrical Manufacturers Association
Provided by IHS under license with NEMA
No reproduction or networking permitted without license from IHS
Not for Resale

21.12 VOLTAGE RATINGS

Voltages shall be 460, 575, 2300, 4000, 4600, 6600, and 13200 volts. These voltage ratings apply to 60-hertz circuits.

NOTE—It is not practical to build motors of all horsepower ratings for all voltages. In general, based on motor design and manufacturing considerations, preferred motor voltage ratings are as follows.

Voltage Rating	Horsepower
460 or 575	100–600
2300	200–5000
4000 or 4600	200–10000
6600	1000–15000
13200	3500 and up

21.13 FREQUENCIES

Frequencies shall be 50 and 60 hertz.

21.14 EXCITATION VOLTAGE

The excitation voltages for field windings shall be 62½, 125, 250, 375, and 500 volts direct current. These excitation voltages do not apply to motors of the brushless type with direct-connected exciters.

NOTE—It is not practical to design all horsepower ratings of motors for all of the foregoing excitation voltages.

21.15 SERVICE FACTOR

21.15.1 Service Factor of 1.0

When operated at rated voltage and frequency, synchronous motors covered by this Part 21 and having a rated temperature rise in accordance with 21.40.1 shall have a service factor of 1.0.

In those applications requiring an overload capacity, the use of a higher horsepower rating, as given in 21.10, is recommended to avoid exceeding the temperature rise for the insulation class used and to provide adequate torque capacity.

21.15.2 Service Factor of 1.15

When a service factor other than 1.0 is specified, it is preferred that motors furnished in accordance with this Part 21 will have a service factor of 1.15 and temperature rise not in excess of that specified in 21.40.2 when operated at the service factor horsepower with rated voltage and frequency maintained.

21.15.3 Application of Motor with 1.15 Service Factor

21.15.3.1 GENERAL

A motor having a 1.15 service factor is suitable for continuous operation at rated load under the usual service conditions given in 21.80.2. When the rated voltage and frequency are maintained, the motor may be overloaded up to the horsepower obtained by multiplying the rated horsepower by the service factor shown on the nameplate. At the service factor load, the motor will have efficiency and power factor or field excitation values different from those at rated load.

1.0 power factor motors will have their field excitation adjusted to maintain the rated power factor. Motors with power factors other than 1.0 (i.e., over-excited) will have their field excitation held constant at the rated load value and the power factor allowed to change.

NOTE—The percent values of locked-rotor, pull-in and pull-out torques and of locked-rotor current are based on the rated horsepower.

21.15.3.2 TEMPERATURE RISE

When operated at the 1.15 service factor load the motor will have a temperature rise not in excess of that specified in 21.40.2 with rated voltage and frequency applied and the field set in accordance with 21.15.3.1. No temperataure rise is specified or implied for operation at rated load.

NOTES

1—Tables 21.40.1 and 21.40.2 apply individually to a particular motor at 1.0 or 1.15 service factor. It is not intended or implied that they be applied to a single motor both at 1.0 and 1.15 service factors.

2—Operation at temperature rise values given in 21.40.2 for a 1.15 service factor load causes the motor insulation to age thermally at approximately twice the rate that occurs at the temperature rise values given in 21.40.1 for a motor with a 1.0 service factor load, i.e., operation for one hour at specified 1.15 service factor is approximately equivalent to operation for two hours at 1.0 service factor.

Copyright National Electrical Manufacturers Association
Provided by IHS under license with NEMA
No reproduction or networking permitted without license from IHS

Not for Resale

21.16 TYPICAL kW RATINGS OF EXCITERS FOR 60-HERTZ SYNCHRONOUS MOTORS

When synchronous motors have individual exciters, the kilowatt ratings given in Tables 21-1 to 21-4, inclusive, represent typical kilowatt ratings for such exciters.

Table 21-1
1.0 POWER FACTOR, 60-HERTZ, SYNCHRONOUS MOTORS, 1800–514 RPM

	Exciter Ratings, kW					
	Speed, Rpm					
Hp	1800	1200	900	720	600	514
20	0.75	0.75	...	...	...	...
25	0.75	0.75	1.0	...	...	...
30	0.75	1.0	1.0	1.5	...	...
40	0.75	1.0	1.5	1.5	1.5	...
50	1.0	1.5	1.5	1.5	2.0	...
60	1.0	1.5	1.5	2.0	2.0	...
75	1.0	1.5	2.0	2.0	3.0	3.0
100	1.5	1.5	2.0	2.0	3.0	3.0
125	1.5	2.0	3.0	3.0	3.0	3.0
150	1.5	2.0	3.0	3.0	3.0	4.5
200	2.0	3.0	3.0	3.0	4.5	4.5
250	2.0	3.0	3.0	4.5	4.5	4.5
300	2.0	3.0	4.5	4.5	4.5	4.5
350	3.0	3.0	4.5	4.5	4.5	6.5
400	3.0	3.0	4.5	4.5	6.5	6.5
450	3.0	4.5	4.5	4.5	6.5	6.5
500	3.0	4.5	4.5	4.5	6.5	6.5
600	3.0	4.5	6.5	6.5	6.5	6.5
700	4.5	4.5	6.5	6.5	6.5	9.0
800	4.5	6.5	6.5	6.5	9.0	9.0
900	4.5	6.5	6.5	9.0	9.0	9.0
1000	4.5	6.5	9.0	9.0	9.0	9.0
1250	6.5	6.5	9.0	9.0	13	13
1500	6.5	9.0	9.0	13	13	13
1750	9.0	9.0	13	13	13	13
2000	9.0	13	13	13	13	17
2250	9.0	13	13	13	17	17
2500	13	13	13	17	17	17
3000	13	13	17	17	17	21
3500	13	17	17	21	21	21
4000	17	17	21	21	21	25
4500	17	21	21	21	25	25
5000	17	21	25	25	33	33
5500	21	25	25	25	33	33
6000	21	25	33	33	33	33
7000	25	33	33	33	33	40
8000	33	33	40	40	40	40
9000	33	40	40	40	50	50
10000	33	40	50	50	50	50
11000	40	50	50	50	50	50
12000	40	50	50	50	65	65
13000	50	50	65	65	65	65
14000	50	65	65	65	65	65
15000	50	65	65	65	65	65
16000	65	65	65	65	85	85
17000	65	65	85	85	85	85
18000	65	65	85	85	85	85
19000	65	85	85	85	85	85
20000	65	85	85	85	85	85
22500	85	85	85	100	100	100
25000	85	100	100	100	100	125
27500	100	100	125	125	125	125
30000	100	125	125	125	125	125

Copyright National Electrical Manufacturers Association
Provided by IHS under license with NEMA
No reproduction or networking permitted without license from IHS

Not for Resale

Table 21-2
0.8 POWER FACTOR, 60-HERTZ, SYNCHRONOUS MOTORS, 1800–514 RPM

	Exciter Ratings, kW					
	Speed, Rpm					
Hp	1800	1200	900	720	600	514
20	0.75	1.5	...	...	...	...
25	1.0	1.5	1.0	...	...	...
30	1.0	1.5	2.0	2.0	...	...
40	1.0	1.5	2.0	3.0	3.0	...
50	1.5	2.0	3.0	3.0	3.0	...
60	1.5	2.0	3.0	3.0	3.0	...
75	1.5	2.0	3.0	3.0	4.5	4.5
100	2.0	3.0	3.0	4.5	4.5	4.5
125	2.0	3.0	4.5	4.5	4.5	4.5
150	2.0	3.0	4.5	4.5	4.5	6.5
200	3.0	4.5	4.5	4.5	6.5	6.5
250	3.0	4.5	4.5	6.5	6.5	6.5
300	3.0	4.5	6.5	6.5	6.5	9.0
350	4.5	4.5	6.5	6.5	9.0	9.0
400	4.5	6.5	6.5	6.5	9.0	9.0
450	4.5	6.5	6.5	9.0	9.0	9.0
500	4.5	6.5	6.5	9.0	9.0	9.0
600	6.5	6.5	9.0	9.0	13	13
700	6.5	9.0	9.0	9.0	13	13
800	6.5	9.0	9.0	13	13	13
900	6.5	9.0	13	13	13	13
1000	9.0	9.0	13	13	13	17
1250	9.0	13	13	13	17	17
1500	13	13	17	17	17	17
1750	13	13	17	17	21	21
2000	13	17	17	21	21	21
2250	13	17	21	21	25	25
2500	17	17	21	21	25	25
3000	17	21	25	25	33	33
3500	21	25	25	33	33	33
4000	21	25	33	33	33	40
4500	25	33	33	33	40	40
5000	33	33	40	40	40	40
5500	33	33	40	40	50	50
6000	33	40	40	50	50	50
7000	40	40	50	50	65	65
8000	40	50	50	65	65	65
9000	50	50	65	65	65	65
10000	50	65	65	65	80	85
11000	65	65	85	85	85	85
12000	65	65	85	85	85	85
13000	65	85	85	85	100	100
14000	65	85	85	85	100	100
15000	85	85	100	100	100	100
16000	85	85	100	100	125	125
17000	85	100	100	100	125	125
18000	85	100	125	125	125	125
19000	100	100	125	125	125	125
20000	100	125	125	125	125	170
22500	125	125	170	170	170	170
25000	125	125	170	170	170	170
27500	125	170	170	170	170	170
30000	170	170	170	170	200	200

Copyright National Electrical Manufacturers Association
Provided by IHS under license with NEMA
No reproduction or networking permitted without license from IHS

Not for Resale

Copyright National Electrical Manufacturers Association
Provided by IHS under license with NEMA
No reproduction or networking permitted without license from IHS
Not for Resale

Table 21-3

1.0 POWER FACTOR, 60-HERTZ, SYNCHRONOUS MOTORS, 450–150 RPM

	Exciter Ratings, kW												
	Speed, Rpm												
Hp	450	400	360	327	300	277	257	240	225	200	180	164	150
20	1.5	1.5	2.0	2.0	2.0	2.0	2.0	2.0	2.0	3.0	3.0	3.0	3.0
25	2.0	2.0	2.0	2.0	2.0	3.0	3.0	3.0	3.0	3.0	3.0	3.0	3.0
30	2.0	2.0	2.0	2.0	3.0	3.0	3.0	3.0	3.0	3.0	3.0	3.0	4.5
40	2.0	3.0	3.0	3.0	3.0	3.0	3.0	3.0	3.0	3.0	4.5	4.5	4.5
50	3.0	3.0	3.0	3.0	3.0	3.0	3.0	3.0	3.0	4.5	4.5	4.5	4.5
60	3.0	3.0	3.0	3.0	3.0	3.0	4.5	4.5	4.5	4.5	4.5	4.5	4.5
75	3.0	3.0	3.0	3.0	4.5	4.5	4.5	4.5	4.5	4.5	4.5	4.5	4.5
100	3.0	4.5	4.5	4.5	4.5	4.5	4.5	4.5	4.5	4.5	6.5	6.5	6.5
125	4.5	4.5	4.5	4.5	4.5	4.5	4.5	4.5	6.5	6.5	6.5	6.5	6.5
150	4.5	4.5	4.5	4.5	4.5	6.5	6.5	6.5	6.5	6.5	6.5	6.5	6.5
200	4.5	4.5	4.5	6.5	6.5	6.5	6.5	6.5	6.5	6.5	6.5	9.0	9.0
250	4.5	6.5	6.5	6.5	6.5	6.5	6.5	6.5	6.5	9.0	9.0	9.0	9.0
300	6.5	6.5	6.5	6.5	6.5	6.5	6.5	9.0	9.0	9.0	9.0	9.0	9.0
350	6.5	6.5	6.5	6.5	6.5	9.0	9.0	9.0	9.0	9.0	9.0	9.0	13
400	6.5	6.5	6.5	9.0	9.0	9.0	9.0	9.0	9.0	9.0	13	13	13
450	6.5	6.5	9.0	9.0	9.0	9.0	9.0	9.0	9.0	13	13	13	13
500	6.5	9.0	9.0	9.0	9.0	9.0	9.0	9.0	13	13	13	13	13
600	9.0	9.0	9.0	9.0	9.0	9.0	13	13	13	13	13	13	13
700	9.0	9.0	9.0	13	13	13	13	13	13	13	13	13	13
800	9.0	9.0	13	13	13	13	13	13	13	13	13	17	17
900	9.0	13	13	13	13	13	13	13	13	17	17	17	17
1000	13	13	13	13	13	13	13	13	17	17	17	17	17
1250	13	13	13	13	13	17	17	17	17	17	17	17	21
1500	13	13	17	17	17	17	17	17	17	21	21	21	21
1750	17	17	17	17	17	17	17	21	21	21	21	21	21
2000	17	17	17	17	21	21	21	21	21	21	25	25	25
2250	17	17	21	21	21	21	21	21	21	25	25	25	25
2500	17	21	21	21	21	21	21	25	25	25	25	33	33
3000	21	21	21	25	25	25	25	25	25	33	33	33	33
3500	25	25	25	25	25	25	33	33	33	33	33	33	33
4000	25	25	33	33	33	33	33	33	33	33	33	40	40
4500	33	33	33	33	33	33	33	33	33	40	40	40	40
5000	33	33	33	33	33	33	33	40	40	40	40	40	40
5500	33	33	33	33	33	40	40	40	40	40	40	50	50
6000	33	33	40	40	40	40	40	40	40	50	50	50	50
7000	40	40	40	40	40	50	50	50	50	50	50	50	50
8000	40	50	50	50	50	50	50	50	50	50	65	65	65
9000	50	50	50	50	50	50	50	65	65	65	65	65	65
10000	50	50	50	65	65	65	65	65	65	65	65	65	65
11000	65	65	65	65	65	65	65	65	65	65	65	85	85
12000	65	65	65	65	65	65	65	65	65	85	85	85	85
13000	65	65	65	65	65	65	85	85	85	85	85	85	85
14000	65	65	85	85	85	85	85	85	85	85	85	85	85
15000	85	85	85	85	85	85	85	85	85	85	85	85	100
16000	85	85	85	85	85	85	85	85	85	85	85	100	100
17000	85	85	85	85	85	85	85	85	85	100	100	100	100
18000	85	85	85	85	85	85	100	100	100	100	100	100	100
19000	85	85	85	100	100	100	100	100	100	100	100	125	125
20000	100	100	100	100	100	100	100	100	100	100	100	125	125

Copyright National Electrical Manufacturers Association
Provided by IHS under license with NEMA
No reproduction or networking permitted without license from IHS
Not for Resale

Table 21-4

0.8 POWER FACTOR, 60-HERTZ, SYNCHRONOUS MOTORS, 450–150 RPM

	Exciter Ratings, kW												
	Speed, Rpm												
Hp	450	400	360	327	300	277	257	240	225	200	180	164	150
20	3.0	3.0	3.0	3.0	4.5	4.5	4.5	4.5	4.5	4.5	4.5	4.5	6.5
25	3.0	3.0	3.0	4.5	4.5	4.5	4.5	4.5	4.5	4.5	4.5	6.5	6.5
30	3.0	3.0	4.5	4.5	4.5	4.5	4.5	4.5	4.5	6.5	6.5	6.5	6.5
40	4.5	4.5	4.5	4.5	4.5	4.5	4.5	6.5	6.5	6.5	6.5	6.5	6.5
50	4.5	4.5	4.5	4.5	4.5	6.5	6.5	6.5	6.5	6.5	6.5	6.5	9.0
60	4.5	4.5	4.5	6.5	6.5	6.5	6.5	6.5	6.5	6.5	6.5	9.0	9.0
75	4.5	4.5	6.5	6.5	6.5	6.5	6.5	6.5	6.5	9.0	9.0	9.0	9.0
100	6.5	6.5	6.5	6.5	6.5	6.5	6.5	9.0	9.0	9.0	9.0	9.0	13
125	6.5	6.5	6.5	6.5	6.5	9.0	9.0	9.0	9.0	9.0	9.0	13	13
150	6.5	6.5	6.5	9.0	9.0	9.0	9.0	9.0	9.0	9.0	13	13	13
200	6.5	9.0	9.0	9.0	9.0	9.0	9.0	13	13	13	13	13	13
250	9.0	9.0	9.0	9.0	9.0	13	13	13	13	13	13	13	13
300	9.0	9.0	9.0	13	13	13	13	13	13	13	13	17	17
350	9.0	9.0	13	13	13	13	13	13	13	13	17	17	17
400	13	13	13	13	13	13	13	13	13	17	17	17	17
450	13	13	13	13	13	13	13	17	17	17	17	17	21
500	13	13	13	13	13	13	17	17	17	17	17	21	21
600	13	13	13	17	17	17	17	17	17	17	21	21	21
700	13	13	17	17	17	17	17	17	17	21	21	21	21
800	17	17	17	17	17	17	17	21	21	21	21	25	25
900	17	17	17	17	17	21	21	21	21	21	25	25	25
1000	17	17	17	21	21	21	21	21	21	25	25	25	25
1250	21	21	21	21	21	21	25	25	25	25	33	33	33
1500	21	21	21	25	25	25	25	25	25	33	33	33	33
1750	25	25	25	25	25	25	33	33	33	33	33	33	33
2000	25	25	33	33	33	33	33	33	33	33	40	40	40
2250	33	33	33	33	33	33	33	33	33	40	40	40	40
2500	33	33	33	33	33	33	40	40	40	40	40	40	40
3000	33	33	40	40	40	40	40	40	40	40	50	50	50
3500	40	40	40	40	40	40	50	50	50	50	50	50	50
4000	40	40	50	50	50	50	50	50	50	50	65	65	65
4500	50	50	50	50	50	50	50	50	65	65	65	65	65
5000	50	50	50	50	50	65	65	65	65	65	65	65	65
5500	50	50	65	65	65	65	65	65	65	65	65	65	65
6000	65	65	65	65	65	65	65	65	65	65	85	85	85
7000	65	65	65	65	65	65	85	85	85	85	85	85	85
8000	65	85	85	85	85	85	85	85	85	85	85	85	85
9000	85	85	85	85	85	85	85	85	85	100	100	100	100
10000	85	85	85	85	100	100	100	100	100	100	100	100	100
11000	100	100	100	100	100	100	100	100	100	100	125	125	125
12000	100	100	100	100	100	100	125	125	125	125	125	125	125
13000	100	125	125	125	125	125	125	125	125	125	125	125	125
14000	125	125	125	125	125	125	125	125	125	125	125	170	170
15000	125	125	125	125	125	125	125	125	125	170	170	170	170
16000	125	125	125	170	170	170	170	170	170	170	170	170	170
17000	125	170	170	170	170	170	170	170	170	170	170	170	170
18000	170	170	170	170	170	170	170	170	170	170	170	170	170
19000	170	170	170	170	170	170	170	170	170	170	170	170	170
20000	170	170	170	170	170	170	170	170	170	170	170	170	170

TESTS AND PERFORMANCE

21.40 TEMPERATURE RISE—SYNCHRONOUS MOTORS

The observable temperature rise under rated-load conditions of each of the various parts of the synchronous motor, above the temperature of the cooling air, shall not exceed the values given in the appropriate table. The temperature of the cooling air[1] is the temperature of the external air as it enters the ventilating openings of the machine, and the temperature rises given in the tables are based on a maximum temperature of 40°C for this external air. Temperatures shall be determined in accordance with IEEE Std 115.

21.40.1 Motors with 1.0 Service Factor at Rated Load

Item	Machine Part	Method of Temperature Determination	Temperature Rise, Degrees C* Class of Insulation System A	B	F	H
a.	Armature winding					
	1. All horsepower ratings	Resistance	60	80	105	125
	2. 1500 horsepower and less	Embedded detector†	70	90	115	140
	3. Over 1500 horsepower					
	a) 7000 volts and less	Embedded detector†	65	85	110	135
	b) Over 7000 volts	Embedded detector†	60	80	105	125
b.	Field winding					
	1. Salient-pole motors	Resistance	60	80	105	125
	2. Cylindrical rotor motors	Resistance	...	85	105	125
c.	The temperatures attained by cores, amortisseur windings, collector rings, and miscellaneous parts (such as brushholders, brushes, pole tips, etc.) shall not injure the insulation or the machine in any respect.					

*For motors which operate under prevailing barometric pressure and which are designed not to exceed the specified temperature rise at altitudes from 3300 feet (1000 meters) to 13000 feet (4000 meters), the temperature rises, as checked by tests at low altitudes, shall be less than those listed in the foregoing table by 1 percent of the specified temperature rise for each 330 feet (100 meters) of altitude in excess of 3300 feet (1000 meters).

†Embedded detectors are located within the slots of the machine and can be either resistance elements or thermocouples. For motors equipped with embedded detectors, this method shall be used to demonstrate conformity with the standard (see 20.63).

▲NOTE—Temperature rises in the foregoing tables are based upon a reference ambient temperature of 40°C. However, it is recognized that synchronous motors may be required to operate in an ambient temperature higher than 40°C. For successful operation of the motors in ambient temperatures higher than 40°C, the temperature rises of the motors given in the foregoing table shall be reduced by the number of degrees that the ambient temperature exceeds 40°C. (Exception—totally enclosed water-air-cooled machines).

[1]For totally enclosed water-air-cooled machines, the temperature of the cooling air is the temperature of the air leaving the coolers. Totally enclosed water-air-cooled machines are normally designed for the maximum cooling water temperature encountered at the location where each machine is to be installed. With a cooling water temperature not exceeding that for which the machine is designed:

a. On machines designed for cooling water temperatures from 5°C to 30°C—the temperature of the air leaving the coolers shall not exceed 40°C.

b. On machines designed for higher cooling water temperatures—the temperature of the air leaving the coolers shall be permitted to exceed 40°C provided the temperature rises of the machine parts are then limited to values less than those given in the table by the number of degrees that the temperature of the air leaving the coolers exceeds 40°C.

Copyright National Electrical Manufacturers Association
Provided by IHS under license with NEMA
No reproduction or networking permitted without license from IHS
Not for Resale

21.40.2 Motors with 1.15 Service Factor at Service Factor Load

Item	Machine Part	Method of Temperature Determination	Temperature Rise, Degrees C* Class of Insulation System A	B	F	H
a.	Armature winding					
	1. All horsepower ratings	Resistance	70	90	115	135
	2. 1500 horsepower and less	Embedded detector†	80	100	125	150
	3. Over 1500 horsepower					
	a) 7000 volts and less	Embedded detector†	75	95	120	145
	b) Over 7000 volts	Embedded detector†	70	90	115	135
b.	Field winding					
	1. Salient-pole motors	Resistance	70	90	115	135
	2. Cylindrical rotor motors	Resistance	...	95	115	135
c.	The temperatures attained by cores, amortisseur windings, collector rings, and miscellaneous parts (such as brushholders, brushes, pole tips, etc.) shall not injure the insulation or the machine in any respect.					

*For motors which operate under prevailing barometric pressure and which are designed not to exceed the specified temperature rise at altitudes from 3300 feet (1000 meters) to 13000 feet (4000 meters), the temperature rises, as checked by tests at low altitudes, shall be less than those listed in the foregoing table by 1 percent of the specified temperature rise for each 330 feet (100 meters) of altitude in excess of 3300 feet (1000 meters).

†Embedded detectors are located within the slots of the machine and can be either resistance elements or thermocouples. For motors equipped with embedded detectors, this method shall be used to demonstrate conformity with the standard (see 20.63).

NOTE—Temperature rises in the foregoing tables are based upon a reference ambient temperature of 40°C. However, it is recognized that synchronous motors may be required to operate in an ambient temperature higher than 40°C. For successful operation of the motors in ambient temperatures higher than 40°C, it is recommended that the temperature rises of the motors given in the foregoing table be reduced, as indicated above, for the ranges of ambient temperature given. (Exception—totally enclosed water-air-cooled machines).[1]

Ambient Temperature, Degrees C	Values by Which the Temperature Rises in the Foregoing Table Should Be Reduced, Degrees C
Above 40 up to and including 50	10
Above 50 up to and including 60	20

21.41 TORQUES[2]

The locked-rotor, pull-in, and pull-out torques, with rated voltage and frequency applied, shall be not less than the values shown in Table 21-5. The motors shall be capable of delivering the pull-out torque for at least 1minute.

21.42 NORMAL Wk² OF LOAD[3]

The values of normal Wk^2 of load on which the pull-in torque values given in 21.41 are based shall be as given in Table 21-6. They are calculated from the following formula.

$$\text{Normal } Wk^2 \text{ of load} = \frac{0.375 \times (\text{horsepower rating})^{1.15}}{(\text{speed in rpm}/1000)^2}$$

[1]For totally enclosed water-air-cooled machines, the temperature of the cooling air is the temperature of the air leaving the coolers. Totally enclosed water-air-cooled machines are normally designed for the maximum cooling water temperature encountered at the location where each machine is to be installed. With a cooling water temperature not exceeding that for which the machine is designed:

a. On machines designed for cooling water temperatures from 5°C to 30°C—the temperature of the air leaving the coolers shall not exceed 40°C.

b. On machines designed for higher cooling water temperatures—the temperature of the air leaving the coolers shall be permitted to exceed 40°C provided the temperature rises of the machine parts are then limited to values less than those given in the table by the number of degrees that the temperature of the air leaving the coolers exceeds 40°C.

[2]Values of torque apply to salient-pole machines. Values of torque for cylindrical rotor machines are subject to individual negotiation between manufacturer and user.

[3]Values of normal Wk^2 of load apply to salient-pole machines. Values of normal Wk^2 for cylindrical-rotor machines are subject to individual negotiation between manufacturer and user.

Copyright National Electrical Manufacturers Association
Provided by IHS under license with NEMA
No reproduction or networking permitted without license from IHS
Not for Resale

Table 21-5
TORQUE VALUES

Speed, Rpm	Hp	Power Factor	Torques, Percent of Rated Full-Load Torque: Locked-Rotor	Pull-In (Based on Normal Wk^2 of Load)*†	Pull-Out†
500 to 1800	200 and below	1.0	100	100	150
	150 and below	0.8	100	100	175
	250 to 1000	1.0	60	60	150
	200 to 1000	0.8	60	60	175
	1250 and larger	1.0	40	60	150
		0.8	40	60	175
450 and below	All ratings	1.0	40	30	150
		0.8	40	30	200

*Values of normal Wk^2 of load are given in 21.42.
†With rated excitation current applied.

21.43 NUMBER OF STARTS[1]

21.43.1 Synchronous motors shall be capable of making the following starts, providing the Wk^2 of the load, the load torque during acceleration, the applied voltage, and the method of starting are those for which the motor was designed.

a. Two starts in succession, coasting to rest between starts, with the motor initially at ambient temperature
b. One start with the motor intially at a temperature not exceeding its rated load operating temperature

21.43.2 If additional starts are required, it is recommended that none be made until all conditions affecting operation have been thoroughly investigated and the apparatus examined for evidence of excessive heating. It should be recognized that the number of starts should be kept to a minimum since the life of the motor is affected by the number of starts.

21.43.3 When requested by the purchaser, a separate starting information plate will be supplied on the motor.

21.44 EFFICIENCY

Efficiency and losses shall be determined in accordance with IEEE Std 115. The efficiency shall be determined at rated output, voltage, frequency, and power factor.

The following losses shall be included in determining the efficiency.

a. I^2R loss of armature
b. I^2R loss of field
c. Core loss
d. Stray-load loss
e. Friction and windage loss[2]
f. Exciter loss if exciter is supplied with and driven from the shaft of the machine

Power required for auxiliary items, such as external pumps or fans, that are necessary for the operation of the motor shall be stated separately.

In determining I^2R losses, the resistance of each winding shall be corrected to a temperature equal to an ambient temperature of 25°C plus the observed rated-load temperature rise measured by resistance. When the rated-load temperature rise has not been measured, the resistance of the winding shall be corrected to the following temperature.

Class of Insulation System	Temperature, Degrees C
A	75
B	95
F	115
H	130

[1]The number of starts apply to salient-pole machines. The number of starts for cylindrical-rotor machines is subject to individual negotiation between manufacturer and user.

[2]In the case of motors which are furnished with thrust bearings, only that portion of the thrust bearing loss produced by the motor itself shall be included in the efficiency calculation. Alternatively, a calculated value of efficiency, including bearing loss due to external thrust load, may be specified.
In the case of motors which are furnished with less than a full set of bearings, friction and windage losses which are representative of the actual installation shall be determined by (1) calculation or (2) experience with shop test bearings and shall be included in the efficiency calculations.

Copyright National Electrical Manufacturers Association
Provided by IHS under license with NEMA
No reproduction or networking permitted without license from IHS
Not for Resale

This reference temperature shall be used for determining I^2R losses at all loads. If the rated temperature rise is specified as that of a lower class of insulation system, the temperature for resistance correction shall be that of the lower insulation class.

21.45 OVERSPEED

Synchronous motors shall be so constructed that, in an emergency not to exceed 2 minutes, they will withstand without mechanical injury overspeeds above synchronous speed in accordance with the following table. During this overspeed condition the machine is not electrically connected to the supply.

Synchronous Speed, Rpm	Overspeed, Percent of Synchronous Speed
1500 and over	20
1499 and below	25

21.46 OPERATION AT OTHER THAN RATED POWER FACTORS

21.46.1 For an 0.8-power-factor motor which is to operate at 1.0 power factor, with normal 0.8-power factor armature current and with field excitation reduced to correspond to that armature current at 1.0 power factor, multiply the rated horsepower and torque values of the motor by the following constants to obtain horsepower at 1.0 power factor and the torques in terms of the 1.0-power factor horsepower rating.

Horsepower	1.25
Locked-rotor torque	0.8
Pull-in torque	0.8
Pull-out torque (approx.)	0.6

For example, consider a 1000-horsepower 0.8-power factor motor which has a locked-rotor torque of 100 percent, a pull-in torque of 100 percent, and a pull-out torque of 200 percent and which is to be operated at 1.0 power factor. In accordance with the foregoing, this motor would be operated at 1250 horsepower, 1.0 power factor, 80 percent locked-rotor torque (based upon 1250 horse power), 80 percent pull-in torque (based upon 1250 horsepower) and a pull-out torque of approximately 120 percent (based upon 1250 horsepower).

21.46.2 For a 1.0-power factor motor which is to operate at 0.8 power factor, with normal 1.0-power-factor field excitation and the armature current reduced to correspond to that excitation, multiply the rated horsepower and torque values of the motor by the following constants to obtain the horsepower at 0.8 power factor and the torques in terms of the 0.8-power-factor horsepower rating.

Horsepower	0.35
Locked-rotor torque	2.85
Pull-in torque	2.85
Pull-out torque (approx.)	2.85

For example, consider a 1000-horsepower 1.0-power factor motor which has a locked-rotor torque of 100 percent, a pull-in torque of 100 percent, and a pull-out torque of 200 percent and which is to be operated at 0.8 power factor. In accordance with the foregoing. This motor could be operated at 350 horsepower, 0.8 power factor, 285 percent locked-rotor torque (based upon 350 horsepower), 285 percent pull-in torque (based upon 350 horsepower) and a 570 percent pull-out torque (based upon 350 horsepower).

Copyright National Electrical Manufacturers Association
Provided by IHS under license with NEMA
No reproduction or networking permitted without license from IHS

Not for Resale

Table 21-6
NORMAL Wk^2 OF LOAD IN LB-FT^2

Hp	Speed, Rpm									
	1800	1200	900	720	600	514	450	400	360	327
20	3.63	8.16	14.51	22.7	32.7	44.4	58.0	73.5	90.7	109.7
25	4.69	10.55	18.76	29.3	42.2	57.4	75.0	95.0	117.2	141.9
30	5.78	13.01	23.1	36.1	52.0	70.8	92.5	117.1	144.6	174.9
40	8.05	18.11	32.2	50.3	72.5	98.6	123.8	163.0	201	244
50	10.41	23.4	41.6	65.0	93.7	127.5	166.5	211	260	315
60	12.83	28.9	51.3	80.2	115.5	157.2	205	260	321	388
75	16.59	37.3	66.4	103.7	149.3	203	265	336	415	502
100	23.1	52.0	92.4	144.3	208	283	369	468	577	699
125	29.8	67.2	119.3	186.6	269	366	478	604	746	903
150	36.8	82.8	147.2	230	331	451	589	745	920	1114
200	51.2	115.3	205	320	461	628	820	1038	1281	1550
250	66.2	149.0	265	414	596	811	1060	1341	1656	2000
300	81.7	183.8	327	511	735	1001	1307	1654	2040	2470
350	97.5	219	390	610	878	1195	1561	1975	2440	2950
400	113.7	256	455	711	1024	1393	1820	2300	2840	3440
450	130.2	293	521	814	1172	1595	2080	2640	3260	3940
500	147.0	331	588	919	1323	1801	2350	2980	3670	4450
600	181.3	408	725	1133	1632	2220	2900	3670	4530	5480
700	216	487	866	1353	1948	2650	3460	4380	5410	6550
800	252	568	1009	1577	2270	3090	4040	5110	6310	7630
900	289	650	1156	1806	2600	3540	4620	5850	7220	8740
1000	326	734	1305	2040	2940	4000	5220	6610	8160	9870
1250	422	949	1687	2640	3790	5160	6750	8540	10540	12750
1500	520	1170	2080	3250	4680	6370	8320	10530	13000	15730
1750	621	1397	2480	3880	5590	7610	9930	12570	15520	18780
2000	724	1629	2900	4520	6510	8870	11580	14660	18100	21900
2250	829	1865	3320	5180	7460	10150	13260	16780	20700	25100
2500	936	2110	3740	5850	8420	11460	14970	18950	23400	28300
3000	1154	2600	4620	7210	10390	14140	18460	23400	28800	34900
3500	1378	3100	5510	8610	12400	16880	22000	27900	34400	41700
4000	1606	3610	6430	10040	14460	19680	25700	32500	40200	48600
4500	1839	4140	7360	11500	16550	22500	29400	37200	46000	55600
5000	2080	4670	8310	12980	18690	25400	33200	42000	51900	62800
5500	2320	5210	9270	14480	20900	28400	37100	46900	57900	70100
6000	2560	5760	10240	16000	23000	31400	41000	51900	64000	77500
7000	3060	6880	12230	19110	27500	37500	48900	61900	76400	92500
8000	3560	8020	14260	22300	32100	43700	57000	72200	89100	107800
9000	4080	9180	16330	25500	36700	50000	65300	82700	102000	123500
10000	4610	10370	18430	28800	41500	56400	73700	93300	115200	139400

(Continued)

Copyright National Electrical Manufacturers Association
Provided by IHS under license with NEMA
No reproduction or networking permitted without license from IHS

Not for Resale

Table 21-6 *(Continued)*

Hp	Speed, Rpm								
	300	277	257	240	225	200	180	164	150
20	130.6	153.3	177.8	204	232	294	363	439	522
25	168.8	198.1	230	264	300	380	469	567	675
30	208	244	283	325	370	468	578	700	833
40	290	340	395	453	515	652	805	974	1159
50	375	440	510	585	666	843	1041	1259	1499
60	462	542	629	721	821	1040	1283	1553	1848
75	597	701	813	933	1062	1344	1659	2010	2390
100	831	976	1132	1299	1478	1871	2310	2790	3330
125	1075	1261	1463	1679	1910	2420	2980	3610	4300
150	1325	1555	1804	2070	2360	2980	3680	4450	5300
200	1845	2170	2510	2880	3280	4150	5120	6200	7380
250	2380	2800	3250	3730	4240	5370	6620	8010	9540
300	2940	3450	4000	4600	5230	6620	8170	9880	11760
350	3510	4120	4780	5490	6240	7900	9750	11800	14050
400	4090	4800	5570	6400	7280	9210	11370	13760	16380
450	4690	5500	6380	7320	8330	10550	13020	15760	18750
500	5290	6210	7200	8270	9410	11910	14700	17790	21200
600	6530	7660	8880	10200	11600	14680	18130	21900	26100
700	7790	9140	10610	12180	13850	17530	21600	26200	31200
800	9090	10660	12370	14200	16150	20400	25200	30500	36300
900	10400	12210	14160	16260	18490	23400	28900	35000	41600
1000	11740	13780	15980	18350	20900	26400	32600	39500	47000
1250	15180	17810	20700	23700	27000	34200	42200	51000	60700
1500	18720	22000	25500	29200	33300	42100	52000	62900	74900
1750	22400	26200	30400	34900	39700	50300	62100	75100	89400
2000	26100	30600	35500	40700	46300	58600	72400	87600	104200
2250	29800	35000	40600	46600	53000	67100	82900	100300	119400
2500	33700	39500	45800	52600	59900	75800	93600	113200	134700
3000	41500	48800	56500	64900	73900	93500	115400	139600	166200
3500	49600	58200	67500	77500	88200	111600	137800	166700	198400
4000	57800	67900	78700	90400	102800	130100	160600	194400	231000
4500	66200	77700	90100	103500	117700	149000	183900	223000	265000
5000	74700	87700	101700	116800	132900	168200	208000	251000	299000
5500	83400	97900	113500	130300	148300	187700	232000	280000	334000
6000	92200	108200	125500	144000	163900	207000	256000	310000	369000
7000	110100	129200	149800	172000	195700	248000	306000	370000	440000
8000	128300	150600	174700	201000	228000	289000	356000	431000	513000
9000	146900	172500	200000	230000	261000	331000	408000	494000	588000
10000	165900	194700	226000	259000	295000	373000	461000	558000	664000

(Continued)

Copyright National Electrical Manufacturers Association
Provided by IHS under license with NEMA
No reproduction or networking permitted without license from IHS

Not for Resale

Table 21-6 *(Continued)*

Hp	Speed, Rpm								
	138	129	120	109	100	95	90	86	80
20	613	711	816	988	1175	1310	1451	1600	1837
25	793	919	1055	1277	1519	1693	1876	2070	2370
30	977	1134	1301	1575	1874	2090	2310	2550	2930
40	1361	1578	1811	2190	2610	2910	3220	3550	4080
50	1759	2040	2340	2830	3370	3760	4160	4590	5270
60	2170	2520	2890	3490	4160	4630	5130	5660	6500
75	2800	3250	3760	4520	5370	5990	6640	7320	8400
100	3900	4530	5200	6290	7480	8340	9240	10180	11690
125	5040	5850	6720	8130	9670	10780	11940	13160	15110
150	6220	7220	8280	10020	11930	13290	14720	16230	18640
200	8660	10040	11530	13950	16600	18500	20500	22600	25900
250	11190	12980	14900	18030	21500	23900	26500	29200	33500
300	13810	16010	18380	22200	26500	29500	32700	36000	41400
350	16480	19120	21900	26600	31600	35200	39000	43000	49400
400	19220	22300	25600	31000	36800	41100	45500	50200	57600
450	22000	25500	29300	35500	42200	47000	52100	57400	65900
500	24800	28800	33100	40000	47600	53100	58800	64800	74400
600	30600	35500	40800	49400	58700	65400	72500	79900	91800
700	36600	42400	48700	58900	70100	78100	86600	95500	109600
800	42700	49500	56800	68700	81800	91100	100900	111300	127800
900	48800	56600	65000	78700	93600	104300	115600	127400	146300
1000	55100	63900	73400	88800	105700	117800	130500	143900	165100
1250	71300	82600	94900	114800	136600	152200	168700	185900	213000
1500	87900	101900	117000	141600	168500	187700	208000	229000	263000
1750	104900	121700	139700	169000	201000	224000	248000	274000	314000
2000	122300	141900	162900	197100	235000	261000	290000	319000	366000
2250	140100	162500	186500	226000	269000	299000	332000	366000	420000
2500	158100	183400	211000	255000	303000	338000	374000	413000	474000
3000	195000	226000	260000	314000	374000	417000	462000	509000	584000
3500	233000	270000	310000	375000	446000	497000	551000	608000	697000
4000	271000	315000	361000	437000	520000	580000	643000	708000	813000
4500	311000	361000	414000	501000	596000	664000	736000	811000	931000
5000	351000	407000	467000	565000	673000	750000	831000	916000	1051000
5500	392000	454000	521000	631000	751000	836000	927000	1022000	1173000
6000	433000	502000	576000	697000	830000	924000	1024000	1129000	1296000
7000	517000	599000	688000	832000	991000	1104000	1223000	1348000	1548000
8000	602000	699000	802000	971000	1155000	1287000	1426000	1572000	1805000
9000	690000	800000	918000	1111000	1323000	1474000	1633000	1800000	2070000
10000	779000	903000	1037000	1254000	1493000	1663000	1843000	2030000	2330000

Copyright National Electrical Manufacturers Association
Provided by IHS under license with NEMA
No reproduction or networking permitted without license from IHS

Not for Resale

21.47 VARIATIONS FROM RATED VOLTAGE AND RATED FREQUENCY

21.47.1 Running

Motors shall operate sucessfully in synchronism, rated exciting current being maintained, under running conditions at rated load with a variation in the voltage or the frequency up to the following.

a. Plus or minus 10 percent of rated voltage, with rated frequency
b. Plus or minus 5 percent of rated frequency, with rated voltage
c. A combined variation in voltage and frequency of 10 percent (sum of absolute values) of the rated values, provided the frequency variation does not exceed plus or minus 5 percent of rated frequency.

Performance within these voltage and frequency variations will not necessarily be in accordance with the standards established for operation at rated voltage and frequency.

21.47.2 Starting

The limiting values of voltage and frequency under which a motor will successfully start and synchronize depend upon the margin between the locked-rotor and pull-in torques of the motor at rated voltage and frequency and the corresponding requirements of the load under starting conditions. Since the locked-rotor and pull-in torques of a motor are approximately proportional to the square of the voltage and inversely proportional to the square of the frequency, it is generally desirable to determine what voltage and frequency variations will actually occur at each installation, taking into account any voltage drop resulting from the starting current drawn by the motor. This information and the torque requirements of the driven machine determine the values of locked-rotor and pull-in torque at rated voltage and frequency that are adequate for the application.

21.48 OPERATION OF SYNCHRONOUS MOTORS FROM VARIABLE-FREQUENCY POWER SUPPLIES

Synchronous motors to be operated from solid-state or other types of variable-frequency power supplies for adjustable-speed-drive applications may require individual consideration to provide satisfactory performance. Especially for operation below rated speed, it may be necessary to reduce the motor torque load below the rated full-load torque to avoid overheating the motor. The motor manufacturer should be consulted before selecting a motor for such applications.

Copyright National Electrical Manufacturers Association
Provided by IHS under license with NEMA
No reproduction or networking permitted without license from IHS

Not for Resale

21.49 SPECIFICATION FORM FOR SLIP-RING SYNCHRONOUS MOTORS

The specification form for listing performance data on synchronous motors with slip rings shall be as follows.

Date _____

SLIP-RING SYNCHRONOUS MOTOR RATING

Hp (Output)	Power Factor	kVA	Rpm	Number of Poles	Phase	Hertz	Volts	Amperes (Approx.)	Frame

Description:

Hp (Output)	Temperature Rise Guarantees Temperature Rise (Degrees C) Not to Exceed			Excitation Requirements (Maximum)	
	Armature Winding		Field Winding		
	Resistance	Embedded Temperature Detector	Resistance	kW	Exciter Rated Voltage

Rating and temperature rise are based on cooling air not exceeding 40 °C and altitude not exceeding 3300 feet (1000 meters). High-potential test in accordance with MG1-21.52.

Torque and kVA (Expressed in Terms of Above Full-Load Rating with 100-percent Voltage Applied)

Locked-Rotor Code Letter	Percent Locked-Rotor kVA	Percent Locked-Rotor Torque	Pull-In Torque		Percent Pull-Out Torque Sustained for 1 Minute With Rated-Load Excitation
			Percent Torque	Maximum Load Wk^2-lb.ft^2	

If started on reduced voltage, the starting torque of the motor will be reduced approximately in proportion to the square of the reduced voltage applied.

Minimum Efficiencies					
Hp (Output)	Power Factor	Full Load	3/4 Load	1/2 Load	

Approximate Weight, Pounds			
Total Net	Rotor Net	Heaviest Part for Crane Net	Total Shipping

Efficiencies are determined by including I^2R losses of armature and field windings at _____ °C, core losses, stray-load losses, and friction and windage losses.* Exciter loss is included if supplied with and driven from shaft of machine. Field rheostat losses are not included.

*a. In the case of a motor furnished with a thrust bearing, only that portion of the thrust bearing loss produced by the motor itself is included in the efficiency calculation.

b. In the case of a motor furnished with less than a full set of bearings, friction and windage losses representative of the actual installation are included as determined by (a) calculation or (b) experience with shop test bearings.

Copyright National Electrical Manufacturers Association
Provided by IHS under license with NEMA
No reproduction or networking permitted without license from IHS

Not for Resale

21.50 SPECIFICATION FORM FOR BRUSHLESS SYNCHRONOUS MOTORS

The specification form for listing performance data on brushless synchronous motors shall be as follows.

Date _____

BRUSHLESS SYNCHRONOUS MOTOR RATING

Hp (Output)	Power Factor	kVA	Rpm	Number of Poles	Phase	Hertz	Volts	Amperes (Approx.)	Frame

Description:

Hp (Output)	Temperature Rise Guarantees Temperature Rise (Degrees C) Not to Exceed			Field Winding	Excitation Requirements* (2) (Maximum)	
		Armature Winding				
		Resistance	Embedded Temperature Detector	Resistance	Watts	Exciter Rated Field Voltage
	Motor					
	Exciter* (1)					

*For rotating transformer give (1) data for equivalent winding temperatures and (2) input kVA and voltage instead of excitation for exciter.

Rating and temperature rise are based on cooling air not exceeding 40°C and altitude not exceeding 3300 feet (1000 meters). High-potential test in accordance with MG1-21.52.

Torque and kVA (Expressed in Terms of Above Full-Load Rating with 100-percent Voltage Applied)

Locked-Rotor Code Letter	Percent Locked-Rotor kVA	Percent Locked-Rotor Torque	Pull-In Torque		Percent Pull-Out Torque Sustained for 1 Minute With Rated-Load Excitation
			Percent Torque	Maximum Load Wk^2-lb.ft^2	

If started on reduced voltage, the starting torque of the motor will be reduced approximately in proportion to the square of the reduced voltage applied.

Minimum Efficiencies					
Hp (Output)	Power Factor	Full Load	3/4 Load	1/2 Load	

Approximate Weight, Pounds			
Total Net	Rotor Net	Heaviest Part for Crane Net	Total Shipping

Efficiencies are determined by including I^2R losses of armature and field windings at _____ °C, core losses, stray-load losses, and friction and windage losses.* Exciter loss is included if supplied with and driven from shaft of machine. Field rheostat losses are not included. When furnished with rotating transformer, replace exciter losses with equivalent transformer losses

*a. In the case of a motor furnished with a thrust bearing, only that portion of the thrust bearing loss produced by the motor itself is included in the efficeincy calculation.

b. In the case of motor furnished with less than a full set of bearings, friction and windage losses representative of the actual installation are included as determined by (a) calculation or (b) experience with shop test bearings.

Copyright National Electrical Manufacturers Association
Provided by IHS under license with NEMA
No reproduction or networking permitted without license from IHS
Not for Resale

21.51 ROUTINE TESTS

21.51.1 Motors Not Completely Assembled in the Factory

The following tests shall be made on all motors which are not completely assembled in the factory, including those furnished without a shaft, or a complete set of bearings, or neither.

a. Resistance of armature and field windings
b. Polarity of field coils
c. High-potential test in accordance with 21.52

21.51.2 Motors Completely Assembled in the Factory

The following tests shall be made on motors which are completely assembled in the factory and furnished with a shaft and a complete set of bearings.

a. Resistance of armature and field windings
b. Check no-load field current at normal voltage and frequency.[1]
c. High-potential test in accordance with 21.52

21.52 HIGH-POTENTIAL TESTS

21.52.1 Safety Precautions and Test Procedure

See 3.01.

21.52.2 Test Voltage—Armature Windings

The test voltage for all motors shall be an alternating voltage whose effective value is 1000 volts plus twice the rated voltage of the machine.[2]

21.52.3 Test Voltage—Field Windings, Motors with Slip Rings

The test voltage for all motors with slip rings shall be an alternating voltage whose effective value is as follows:

a. Motor to be started with its field short-circuited or closed through an exciting armature; ten times rated excitation voltage but in no case less than 2500 volts nor more than 5000 volts.
b. Motor to be started with a resistor in series with the field winding; twice the rms value of the IR drop across the resistor but in no case less than 2500 volts, the IR drop being taken as the product of the resistance and the current which would circulate in the field winding if short-circuited on itself at the specified starting voltage.

21.52.4 Test Voltage—Assembled Brushless Motor Field Winding and Exciter Armature Winding

The test voltage for all assembled brushless motor field windings and exciter armature windings shall be an alternating voltage whose effective value is as follows.

a. Rated excitation voltage ≤ 350 volts direct current; ten times the rated excitation voltage but in no case less than 1500 volts
b. Rated excitation voltage > 350 volts direct current; 2800 volts plus twice the rated excitation voltage
c. Alternatively, the brushless exciter rotor (armature) shall be permitted to be tested at 1000 volts plus twice the rated nonrectified alternating current voltage but in no case less than 1500 volts.

The brushless circuit components (diodes, thyristors, etc.) on an assembled brushless exciter and synchronous machine field winding shall be short-circuited (not grounded) during the test.

21.52.5 Test Voltage—Brushless Exciter Field Winding

The test voltage for all brushless exciter field windings shall be an alternating voltage whose effective value is as follows.

a. Rated excitation voltage ≤ 350 volts direct current; ten times the rated excitation voltage but in no case less than 1500 volts.
b. Rated excitation voltage > 350 volts direct current; 2800 volts plus twice the rated excitation voltage
c. Exciters with alternating-current excited stators (fields) shall be tested at 1000 volts plus twice the alternating current rated voltage of the stator

21.53 MACHINE SOUND

See 20.50.

21.54 MECHANICAL VIBRATION ▲

See MG 1, Part 7.

---

[1] On motors having brushless excitation systems, check instead the exciter field current at no-load with normal voltage and frequency on the motor.

[2] A direct instead of an alternating voltage is sometimes used for high-potential tests on primary windings of machines rated 6000 volts or higher. In such cases, a test voltage equal to 1.7 times the alternating-current test voltage (effective value) as given in 21.52.2 and 21.52.3 is recommended. Following a direct-voltage high-potential test, the tested winding should be thoroughly grounded. The insulation rating of the winding and the test level of the voltage applied determine the period of time required to dissipate the charge and, in many cases, the ground should be maintained for several hours to dissipate the charge to avoid hazard to personnel.

Copyright National Electrical Manufacturers Association
Provided by IHS under license with NEMA
No reproduction or networking permitted without license from IHS
Not for Resale

MANUFACTURING

21.60 TOLERANCE LIMITS IN DIMENSIONS

The dimensions from the shaft center to the bottom of the feet shall be not greater than the nominal dimensions shown on the manufacturer's dimension sheet. When the motor is coupled or geared to the driven machines, shims are usually required to secure accurate alignment.

21.61 NAMEPLATE MARKING ▲

The following information shall be given on nameplates. For abbreviations, see 1.80.

a. Manufacturer's type and frame designation
b. Horsepower output
c. Time rating
d. Temperature rise[1]
e. Rpm at full load
f. Frequency
g. Number of phases
h. Voltage
i. Rated amperes per terminal
j. Rated field current[2]
k. Rated excitation voltage[2]
l. Rated power factor
m. Code letter (see 10.37)
n. Service factor

Some examples of additional information that may be included on the nameplate are:

o. Enclosure or IP code
p. Manufacturer's name, mark, or logo
q. Manufacturer's plant location
r. Serial number or date of manufacture

21.62 MOTOR TERMINAL HOUSINGS AND BOXES

21.62.1 When motors covered by this Part 21 are provided with terminal housings for line cable connections,[3] the minimum dimension and usable volume shall be as indicated in Table 21-7 for Type I terminal housings or Figure 21-1 for Type II terminal housings.

Unless otherwise specified, when motors are provided with terminal housings, a Type I terminal housing shall be supplied.

21.62.2 For motors rated 601 volts and higher, accessory leads shall terminate in a terminal box or boxes separate from the motor terminal housing. As an exception, current and potential transformers located in the motor terminal housing shall be permitted to have their secondary connections terminated in the motor terminal housing if separated from the motor leads by a suitable physical barrier.

21.62.3 For motors rated 601 volts and higher, the termination of leads of accessory items normally operating at a voltage of 50 volts (rms) or less shall be separated from leads of higher voltage by a suitable physical barrier to prevent accidental contact or shall be terminated in a separate box.

---

[1] As an alternative marking, this item shall be permitted to be replaced by the following.
a. Maximum ambient temperature for which the motor is designed (see 21.40, Note).
b. *Insulation system designation* (if armature and field use different classes of insulation systems, both insulation systems shall be given, with that for the armature being given first).

[2] Applies to exciter in case of brushless machine

[3] Terminal housings containing surge capacitors, surge arresters, current transformers, or potential transformers, require individual consideration.

Copyright National Electrical Manufacturers Association
Provided by IHS under license with NEMA
No reproduction or networking permitted without license from IHS
Not for Resale

Table 21-7 ▲
TYPE I TERMINAL HOUSING
UNSUPPORTED AND INSULATED TERMINATIONS

Voltage	Maximum Full-Load Current	Minimum Usable Volume, Cubic Inches	Minimum Internal Dimension, Inches	Minimum Centerline Distance,* Inches
0–600	400	900	8	...
	600	2000	8	...
	900	3200	10	...
	1200	4600	14	...
601–2400	160	180	5	...
	250	330	6	...
	400	900	8	...
	600	2000	8	12.6
	900	3200	10	12.6
	1500	3940	14	20.1
2401–4800	160	2000	8	12.6
	700	5600	14	16
	1000	8000	16	20
	1500	10740	20	25
	2000	13400	22	28.3
4801–6900	260	5600	14	16
	680	8000	16	20
	1000	9400	18	25
	1500	11600	20	25
	2000	14300	22	28.3
6901–13800	400	4400	22	28.3
	900	50500	25	32.3
	1500	56500	27.6	32.3
	2000	62500	30.7	32.3

*Minimum distance from the entrance plate for conduit entrance to the centerline of machine leads.

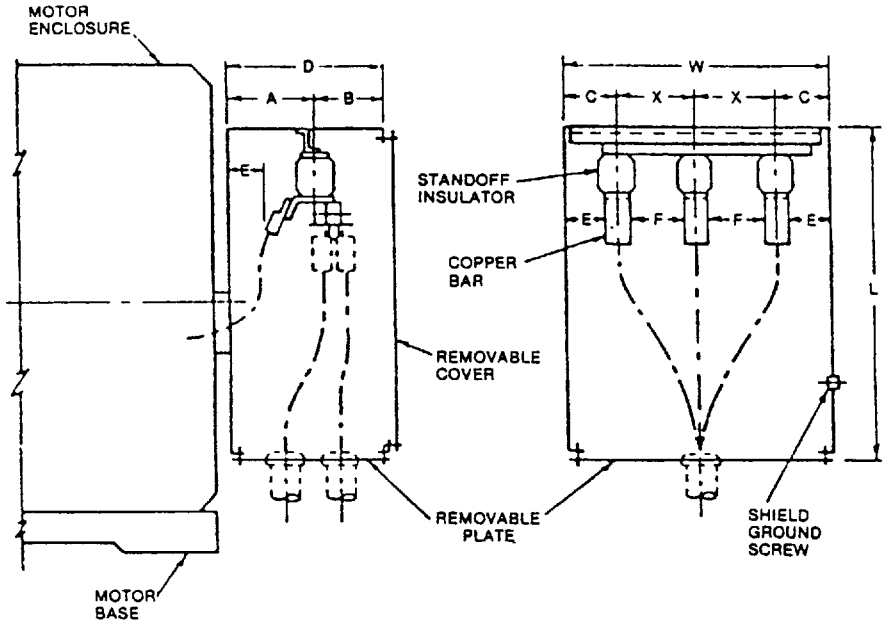

Motor Voltage	Minimum Dimensions (inches)								
	L	W	D	A	B	C	X	E	F
460–575	24	18	18	9 1/2	8 1/2	4	5	2 1/2	4
2300–4000	26	27	18	9 1/2	8 1/2	5 1/2	8	3 1/2	5
6600	36	30	18	9 1/2	8 1/2	6	9	4	6
13200	48	42	25	13 1/2	11 1/2	8 1/2	13 1/2	6 3/4	9 1/2

Figure 21-1
TYPE II MOTOR TERMINAL HOUSING STANDOFF-INSULATOR-SUPPORTED INSULATED OR UNINSULATED TERMINATIONS

Copyright National Electrical Manufacturers Association
Provided by IHS under license with NEMA
No reproduction or networking permitted without license from IHS

Not for Resale

21.63 EMBEDDED DETECTORS

See 20.63.

APPLICATION DATA

21.80 SERVICE CONDITIONS

21.80.1 General

Motors should be properly selected with respect to their service conditions, usual or unusual, both of which involve the environmental conditions to which the machine is subjected and the operating conditions. Machines conforming to this Part 21 are designed for operation in accordance with their ratings under usual service conditions. Some machines may also be capable of operating in accordance with their ratings under one or more unusual service conditions. Definite-purpose or special-purpose machines may be required for some unusual conditions.

Service conditions, other than those specified as usual, may involve some degree of hazard. The additional hazard depends upon the degree of departure from usual operating conditions and the severity of the environment to which the machine is exposed. The additional hazard results from such things as overheating, mechanical failure, abnormal deterioration of the insulation system, corrosion, fire, and explosion.

Although experience of the user may often be the best guide, the manufacturer of the driven equipment and the motor manufacturer should be consulted for further information regarding any unusual service conditions which increase the mechanical or thermal duty on the machine and, as a result, increase the chances for failure and consequent hazard. This further information should be considered by the user, his consultants, or others most familiar with the details of the application involved when making the final decision.

21.80.2 Usual Service Conditions

Usual service conditions include the following:

a. An ambient temperature in the range of 0°C to 40°C, or when water cooling is used, in the range of 5°C to 40°C
b. An altitude not exceeding 3300 feet (1000 meters)
c. A location and supplementary enclosures, if any, such that there is no serious interference with the ventilation of the motor

21.80.3 Unusual Service Conditions

The manufacturer should be consulted if any unusual service conditions exist which may affect the construction or operation of the motor. Among such conditions are:

a. Exposure to:
   1. Combustible, explosive, abrasive, or conducting dusts
   2. Lint or very dirty operating conditions where the accumulation of dirt will interfere with normal ventilation
   3. Chemical fumes, flammable or explosive gases
   4. Nuclear radiation
   5. Steam, salt-laden air, or oil vapor
   6. Damp or very dry locations, radiant heat, vermin infestation, or atmospheres conducive to the growth of fungus
   7. Abnormal shock, vibration, or mechanical loading from external sources
   8. Abnormal axial or side thrust imposed on the motor shaft
b. Operation where:
   1. There is excessive departure from rated voltage or frequency, or both (see 21.47)
   2. The deviation factor of the alternating-current supply voltage exceeds 10 percent
   3. The alternating-current supply voltage is unbalanced by more than 1 percent (see 21.81)
   4. Low noise levels are required
   5. The power system is not grounded (see 21.91).
c. Operation at speeds other than rated speed (see 21.47)
d. Operation in a poorly ventilated room, in a pit, or in an inclined position
e. Operation where subjected to:
   1. Torsional impact loads
   2. Repetitive abnormal overloads
   3. Reversing or electric braking
   4. Frequent starting (see 21.43)
   5. Out-of-phase bus transfer

Copyright National Electrical Manufacturers Association
Provided by IHS under license with NEMA
No reproduction or networking permitted without license from IHS

Not for Resale

21.81 EFFECTS OF UNBALANCED VOLTAGES ON THE PERFORMANCE OF POLYPHASE SYNCHRONOUS MOTORS

When the line voltages applied to a polyphase synchronous motor are not equal, unbalanced currents in the stator windings will result. A small percentage voltage unbalance will result in a much larger percentage current unbalance.

Voltages should be evenly balanced as closely as can be read on a voltmeter. If the voltages are unbalanced, the rated horsepower of polyphase synchronous motors should be multiplied by the factor shown in Figure 21-2 to reduce the possibility of damage to the motor.[1] Operation of the motor with more than a 5-percent voltage unbalance is not recommended.

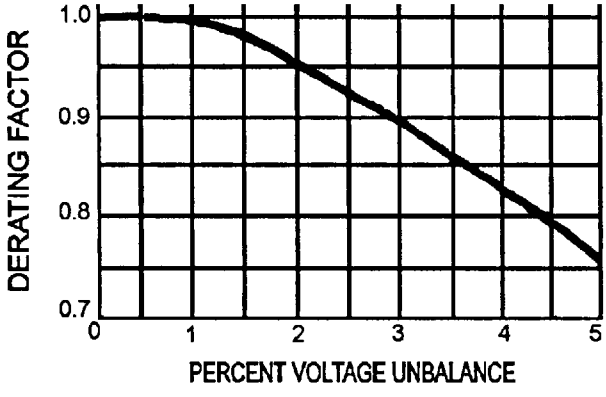

Figure 21-2
POLYPHASE SYNCHRONOUS MOTOR DERATING FACTOR DUE TO UNBALANCED VOLTAGE

When the derating curve of Figure 21-2 is applied for operation on unbalanced voltages, the selection and setting of the overload device should take into account the combination of the derating factor applied to the motor and the increase in current resulting from the unbalanced voltages. This is a complex problem involving the variation in motor current as a function of load and voltage unbalance in addition to the characteristics of the overload device relative to $I_{maximum}$ or $I_{average}$. In the absence of specific information it is recommended that overload devices be selected or adjusted, or both, at the minimum value that does not result in tripping for the derating factor and voltage unbalance that applies. When unbalanced voltages are anticipated, it is recommended that negative sequence current relays be installed or the overloaded devices be selected so as to be responsive to $I_{maximum}$ in preference to overload devices responsive to $I_{average}$.

21.81.1 Effect on Performance

21.81.1.1 TEMPERATURE RISE

The temperature rise of the motor operating at a particular load and percentage voltage unbalance will be greater than for the motor operating under the same conditions with balanced voltages.

21.81.1.2 CURRENTS

The effect of unbalanced voltages on polyphase synchronous motors is equivalent to the introduction of a "negative sequence voltage" having a rotation opposite to that occurring with balanced voltages. This negative sequence voltage produces an air gap flux rotating against the rotation of the rotor, tending to produce high currents. A small negative-sequence voltage may produce significant continuous current in the amortisseur (cage) winding, which normally carries little or no current when the motor is running in synchronism, along with slightly higher current in the stator winding.

The negative-sequence current at normal operating speed with unbalanced voltages may be in the order of four to ten times the voltage unbalance.

The locked-rotor current will be unbalanced to the same degree that the voltages are unbalanced but the locked-rotor kVA will increase only slightly.

21.81.1.3 TORQUES

The locked-rotor torque, pull-in torque, and pull-out torque are decreased when the voltage is unbalanced. If the voltage unbalance is extremely severe, the torques might not be adequate for the application.

21.81.2 Voltage Unbalance Defined

The voltage unbalance in percent may be defined as follows.

$$\text{percent voltage unbalance} = 100 \times \frac{\text{maximum voltage deviation from average voltage}}{\text{average voltage}}$$

EXAMPLE—With voltages of 2300, 2220, and 2185 the average is 2235, the maximum deviation from the average is 65, and the percent unbalance = $100 \times {}^{65}/_{2235} = 2.9$ percent.

[1]The derating factor shown in Figure 21-2 is applicable only to motors with normal starting torque and normal locked-rotor current, i.e., motors typically intended for service with centrifugal pumps, fans, compressors, and so forth, where the required starting torque is less than 100 percent of rated full-load torque. For motors with other starting torque characteristics, or motors with specified limits on locked-rotor current, the motor manufacturer should be consulted.

Copyright National Electrical Manufacturers Association
Provided by IHS under license with NEMA
No reproduction or networking permitted without license from IHS
Not for Resale

21.82 COUPLING END PLAY AND ROTOR FLOAT FOR HORIZONTAL MOTORS

See 20.81.

21.83 BELT, CHAIN, AND GEAR DRIVE

When motors are for belt, chain, or gear drive, the motor manufacturer should be consulted.

21.84 PULSATING ARMATURE CURRENT

When the driven load, such as that of reciprocating-type pumps, compressors, etc., requires a variable torque during each revolution, it is recommended that the combined installation have sufficient inertia in its rotating parts to limit the variations in motor armature current to a value not exceeding 66 percent of full-load current.

NOTE—The basis for determining this variation should be by oscillograph measurement and not by ammeter readings. A line should be drawn on the oscillogram through the consecutive peaks of the current wave. This line is the envelope of the current wave. The variation is the difference between the maximum and minimum ordinates of this envelope. This variation should not exceed 66 percent of the maximum value of the rated full-load current of the motor. (The maximum value of the motor armature current to be assumed as 1.41 times the rated full-load current.)

21.85 TORQUE PULSATIONS DURING STARTING OF SYNCHRONOUS MOTORS

When operated at other than synchronous speed, all salient-pole synchronous motors develop a pulsating torque superimposed on the average torque. During starting and acceleration (with no field excitation applied), the frequency of the torque pulsations is at any instant equal to the per-unit slip times twice the line frequency. Thus, for a 60-hertz motor, the frequency of the torque pulsation varies from 120 hertz at zero speed to zero hertz at synchronous speed.

Any system consisting of inertias connected by shafting has one or more natural torsional frequencies. During acceleration by a salient-pole synchronous motor, any torsional natural frequency at or below twice line frequency will be transiently excited.

When it is desired to investigate the magnitudes of the torques which are transiently imposed upon the shafting during starting, the instantaneous torque pulsations should be considered in addition to the average torque.

21.86 BUS TRANSFER OR RECLOSING

Synchronous motors are inherently capable of developing transient current and torque considerably in excess of rated current and torque when exposed to an out-of-phase bus transfer or momentary voltage interruption and reclosing on the same power supply. The magnitude of this transient torque may range from 2 to 20 times rated torque and is a function of the machine, operating conditions, switching time, rotating system inertias and torsional spring constants, number of motors on the bus, etc.

21.86.1 A slow transfer or reclosing is defined as one in which the length of time between disconnection of the motor from the power supply and reclosing onto the same or another power supply is equal to or greater than one and a half motor open-circuit alternating-current time constant.

It is recommended that slow transfer or reclosing be used so as to limit the possibility of damaging the motor or driven (or driving) equipment, or both. This time delay permits a sufficient decay in rotor flux linkages so that the transient current and torque associated with the bus transfer or reclosing will remain within acceptable levels. When several motors are involved, the time delay should be based on one and a half times the longest open-circuit time constant of any motor on the system being transferred or reclosed.

21.86.2 A fast transfer or reclosing is defined as one which occurs within a time period (typically between 5 and 10 cycles) shorter than one and a half open circuit alternating-current time constant. In such cases transfer or reclosure should be timed to occur when the difference between the motor residual voltage and frequency, and the incoming system voltage and frequency will not result in damaging transients.

The rotating masses of a motor-load system, connected by elastic shafts, constitutes a torsionally responsive mechanical system which is excited by the motor electromagnetic (air-gap) transient torque that consists of the sum of an exponentially decaying unidirectional component and exponentially decaying oscillatory components at several frequencies, including power frequency, slip frequency and twice slip frequency. The resultant shaft torques may be either attenuated or amplified with reference to the motor electromagnetic (air-gap) torque, and for this reason it is recommended that the electromechanical interactions of the motor, the driven equipment, and the power system be studied for any system where fast transfer or reclosing is used.

The electrical and mechanical parameters required for such a study will be dependent upon the method of analysis and the degree of detail employed in the study. When requested, the motor manufacturer should furnish the following and any other information as may be required for the system study.

Copyright National Electrical Manufacturers Association
Provided by IHS under license with NEMA
No reproduction or networking permitted without license from IHS

Not for Resale

a. Synchronous, transient and subtransient reactances and time constants as well as resistances
b. Wk^2 of the motor and exciter rotors
c. A detailed shaft model with elastic data, masses, shaft lengths and diameters of different sections.

21.86.3 For slow bus transfers, and for fast transfers if the study indicates that the motor will not remain in synchronism, the following procedures are recommended.

a. Motor with slip rings—Remove the field excitation, reestablish conditions for resynchronizing and delay transfer or reclosing for one-and-one-half open circuit alternating current time constants.
b. Brushless motor—Remove the exciter field excitation, reestablish conditions for resynchronizing, and delay transfer or reclosing for one-and-one-half open circuit alternating time constants.

21.87 CALCULATION OF NATURAL FREQUENCY OF SYNCHRONOUS MACHINES DIRECT-CONNECTED TO RECIPROCATING MACHINERY

21.87.1 The undamped natural frequency of oscillation of a synchronous machine connected to an infinite system is:

$$f_n = \frac{35200}{n}\sqrt{\frac{P_r \times f}{Wk^2}}$$

Where:

f_n = natural frequency in cycles per minute
n = synchronous speed in revolutions per minute
P_r = synchronizing torque coefficient (see 21.87.2)
f = frequency of power supply in hertz
W = weight of all rotating parts in pounds
k = radius of gyration of rotating parts in feet

21.87.2 When a pulsating torque is applied to its shaft, the synchronous machine rotor will oscillate about its average angular position in the rotating magnetic field produced by the currents in the stator. As a result of this oscillation, a pulsating torque will be developed at the air gap, a component of which is proportional to the angular displacement of the rotor from its average position. The proportionality factor is the synchronizing torque coefficient, P_r. It is expressed in kilowatts, at synchronous speed, per electrical radian.

21.87.3 The value of P_r, for a given machine, is dependent upon (1) the voltage and frequency of the power system, (2) the magnitude of the applied load, (3) the operating power factor, (4) the power system impedance, and (5) the frequency of the torque pulsations. It is recommended that, unless other conditions are specified, the value of P_r submitted be that corresponding to operation at rated voltage, frequency, load, and power factor, with negligible system impedance and a pulsation frequency, in cycles per minute, equal to the rpm for synchronous motors and equal to one-half the rpm for synchronous generators.

21.88 TYPICAL TORQUE REQUIREMENTS

Typical torque requirements for various synchronous motor applications are listed in Table 21-8. In individual cases, lower values may be adequate or higher values may be required depending upon the design of the particular machine and its operating conditions.

When using Table 21-8, the following should be noted.

21.88.1 The locked-rotor and pull-in torque values listed are based upon rated voltage being maintained at the motor terminals during the starting period. If the voltage applied to the motor is less than the rated voltage because of a drop in line voltage or the use of reduced-voltage starting, the locked-rotor and pull-in torque values specified should be appropriately higher than the torque values at rated voltage. Alternatively, the locked-rotor and pull-in torque values listed in the table should be specified together with the voltage at the motor terminals for each torque value.

21.88.2 The locked-rotor and pull-in torque values listed in Table 21-8 are also based upon the selection of a motor whose rating is such that the normal running load does not exceed rated horsepower. If a smaller motor is used, correspondingly higher locked-rotor and pull-in torques may be required.

21.88.3 The pull-in torque developed by a synchronous motor is not a fixed value but varies over a wide range depending upon the Wk^2 of its connected load. Hence, to design a motor which will synchronize a particular load, it is necessary to know the Wk^2 of the load as well as the pull-in torque. For the applications listed in Table 21-8, the Wk^2 of the load divided by the normal Wk^2 of load (see 21.42) will usually fall within the range of the values shown in the last column. Where a rotating member of the driven equipment operates at a speed different from that of the motor, its Wk^2 should be multiplied by the square of the ratio of its speed to the motor speed to obtain the equivalent inertia at the motor shaft.

21.88.4 For some applications, torque values are listed for (a) starting with the driven machine unloaded in some manner and (b) starting without unloading of the driven machine. Even though the driven machine is normally unloaded for starting, the higher torque values required for starting under load may be justified since, with suitable control, this will allow automatic resynchronization following pull-out due to a temporary overload or voltage disturbance.

21.88.5 The pull-out torque values listed in Table 21-8 take into account the peak loads typical of the application and include an allowance for usual variations in line voltage. Where severe voltage disturbances are expected and

Copyright National Electrical Manufacturers Association
Provided by IHS under license with NEMA
No reproduction or networking permitted without license from IHS
Not for Resale

continuity of operation is important, higher values of pull-out torque may be justified.

21.89 COMPRESSOR FACTORS

The pulsating torque of a reciprocating compressor produces a pulsation in the current which the driving motor draws from the line. To limit this current pulsation to an acceptable value, the proper Wk^2 must be provided in the rotating parts. Table 21-9 gives data for calculating the amount of Wk^2 required.

Table 21-9 lists a wide variety of compressor applications, each representing a compressor of a certain type together with a set of operating conditions. The application number assigned is for convenient identification. For each application, the table gives a range of values for the compressor factor, C, which will limit the current pulsation to 66 percent of motor full-load current (the limit established in 21.84) and also the range of values which will limit the current pulsation to 40 percent and to 20 percent of motor full-load current. The method of measuring pulsation is also given in 21.84.

The values of compressor factor, C, which are required to keep the current pulsation within specified limits are determined by the physical characteristics of the compressor, such as number of cylinders, whether single or double acting, number of stages, crank angle, and weight of reciprocating parts, together with the operating conditions, such as kind of gas compressed, suction and discharge pressures, and method of unloading. They are independent of the characteristics of the synchronous motor used to drive the compressor.

Table 21-8
TYPICAL TORQUE REQUIREMENTS FOR SYNCHRONOUS MOTOR APPLICATIONS

Item. No.	Application	Torques in Percent of Motor Full-Load Torque			Ratio of Wk^2 of Load to Normal Wk^2 of Load
		Locked-Rotor	Pull-In	Pull-Out	
1	Attrition mills (for grain processing)—starting unloaded	100	60	175	3–15
2	Ball mills (for rock and coal)	140	110	175	2–4
3	Ball mills (for ore)	150	110	175	1.5–4
4	Banbury mixers	125	125	250	0.2–1
5	Band mills	40	40	250	50–110
6	Beaters, standard	125	100	150	3–15
7	Beaters, breaker	125	100	200	3–15
8	Blowers, centrifugal—starting with:				
	a. Inlet or discharge valve closed	30	40–60*	150	3–30
	b. Inlet or discharge valve open	30	100	150	3–30
9	Blowers, positive displacement, rotary—by-passed for starting	30	25	150	3–8
10	Bowl mills (coal pulverizers)—starting unloaded				
	a. Common motor for mill and exhaust fan	90	80	150	5–15
	b. Individual motor for mill	140	50	150	4–10
11	Chippers—starting empty	60	50	250	10–100
12	Compressors, centrifugal—starting with:				
	a. Inlet or discharge valve closed	30	40–60*	150	3–30
	b. Inlet or discharge valve open	30	100	150	3–30
13	Compressors, Fuller Company				
	a. Starting unloaded (by-pass open)	60	60	150	0.5–2
	b. Starting loaded (by-pass closed)	60	100	150	0.5–2

See page 25 for notes applying to this table. *(Continued)*

Copyright National Electrical Manufacturers Association
Provided by IHS under license with NEMA
No reproduction or networking permitted without license from IHS
Not for Resale

Table 21-8 *(Continued)*

Item. No.	Application	Torques in Percent of Motor Full-Load Torque			Ratio of Wk^2 of Load to Normal Wk^2 of Load
		Locked-Rotor	Pull-In	Pull-Out	
14	Compressors, Nash-Hyotr—starting unloaded	40	60	150	2–4
15	Compressores, reciprocating—starting unloaded				
	a. Air and gas	30	25	150	0.2–15
	b. Ammonia (discharge pressure 100-250 psi)	30	25	150	0.2–15
	c. Freon	30	40	150	0.2–15
16	Crushers, Bradley-Hercules—starting unloaded	100	100	250	2–4
17	Crushers, cone—starting unloaded	100	100	250	1–2
18	Crushers, gyratory—starting unloaded	100	100	250	1–2
19	Crushers, jaw—starting unloaded	150	100	250	10–50
20	Crushers, roll—starting unloaded	150	100	250	2–3
21	Defibrators (see Beaters, standard)				
22	Disintegrators, pulp (see Beaters, standard)				
23	Edgers	40	40	250	5–10
24	Fans, centrifugal (except sintering fans)—starting with:				
	a. Inlet or discharge valve closed	30	40–60*	150	5–60
	b. Inlet or discharge valve open	30	100	150	5–60
25	Fans, centrifugal sintering—starting with inlet gates closed	40	100	150	5–60
26	Fans, propeller type—starting with discharge valve open	30	100	150	5–60
27	Generators, alternating current	20	10	150	2–15
28	Generators, direct current (except electroplating)				
	a. 150 kW and smaller	20	10	150	2–3
	b. Over 150 kW	20	10	200	2–3
29	Generators, electroplating	20	10	150	2–3
30	Grinders, pulp, single, long magazine-type—starting unloaded	50	40	150	2–5
31	Grinders, pulp, all except single, long magazine-type—starting unloaded	40	30	150	1–5
32	Hammer mills—starting unloaded	100	80	250	30–60
33	Hydrapulpers, continuous type	125	125	150	5–15
34	Jordans (see Refiners, conical)				
35	Line shafts, flour mill	175	100	150	5–15
36	Line shafts, rubber mill	125	110	225	0.5–1
37	Plasticators	125	125	250	0.5–1
38	Pulverizers, B&W—starting unload				
	a. Commom motor for mill and exhaust fan	105	100	175	20–60
	b. Individual motor for mill	175	100	175	4–10
39	Pumps, axial flow, adjustable blade—starting with:				
	a. Casing dry	5–40**	15	150	0.2–2
	b. Casing filled, blades feathered	5–40**	40	150	0.2–2
40	Pumps, axial flow, fixed blade—starting with:				
	a. Casing dry	5–40**	15	150	0.2–2
	b. Casing filled, discharge closed	5–40**	175–250*	150	0.2–2
	c. Casing filled, discharge open	5–40**	100	150	0.2–2

See page 25 for notes applying to this table. *(Continued)*

Copyright National Electrical Manufacturers Association
Provided by IHS under license with NEMA
No reproduction or networking permitted without license from IHS

Not for Resale

Table 21-8 *(Continued)*

Item No.	Application	Torques in Percent of Motor Full-Load Torque			Ratio of Wk^2 of Load to Normal Wk^2 of Load
		Locked-Rotor	Pull-In	Pull-Out	
41	Pumps, centrifugal, Francis impeller—starting with				
	a. Casing Dry	5—40**	15	150	0.2-2
	b. Casing filled, discharge closed	5—40**	60-80*	150	0.2-2
	c. Casing filled, discharge open	5—40**	100	150	0.2-2
42	Pumps, centrifugal, radia impeller—starting with:				
	a. Casing dry	5—40**	15	150	0.2-2
	b. Casing filled, discharge closed	5—40**	40-60*	150	0.2-2
	c. Casing filled, discharge open	5—40**	100	150	0.2-2
43	Pumps, mixed flow—starting with:				
	a. Casing dry	5—40**	15	150	0.2-2
	b. Casing filled, discharge closed	5—40**	82-125*	150	0.2-2
	c. Casing filled, discharge open	5—40**	100	150	0.2-2
44	Pumps, reciprocating—starting with:				
	a. Cylinders dry	40	30	150	0.2-15
	b. By-pass open	40	40	150	0.2-15
	c. No by-pass (three cylinder)	150	100	150	0.2-15
45	Refiners, conical (Jordan, Hydrafiners, Claflins, Mordens)—starting with plug out	50	50-100†	150	2-20
46	Refiners, disc type—starting unloaded	50	50	150	1-20
47	Rod mills (for ore grinding)	160	120	175	1.5-4
48	Rolling mills				
	a. Structural and rail roughing mills	40	30	300-400††	0.5-1
	b. Structural and rail finishing mills	40	30	250	0.5-1
	c. Plate mills	40	30	300-400††	0.5-1
	d. Merchant mill trains	60	40	250	0.5-1
	e. Billet, skelp, and sheet bar mills, continuous, with lay-shaft drive	60	40	250	0.5-1
	f. Rod mills, continuous with lay-shaft drive	100	60	250	0.5-1
	g. Hot strip mills, continuous, individual drive roughing stands	50	40	250	0.5-1
	h. Tube piercing and expanding mills	60	40	300-400††	0.5-1
	i. Tube rolling (plug) mills	60	40	250	0.5-1
	j. Tube reeling mills	60	40	250	0.5-1
	k. Brass and copper roughing mills	50	40	250	0.5-1
	l. Brass and copper finishing mills	150	125	250	0.5-1
49	Rubber mills, individual drive	125	125	250	0.5-1
50	Saws, band (see Band mills)				
51	Saws, edger (see Edgers)				
52	Saws, trimmer	40	40	250	5-10
53	Tube mills (see Ball mills)				
54	Vacuum pumps, Hytor				
	a. With unloader	40	30	150	2-4
	b. Without unloader	60	100	150	2-4
55	Vacuum pumps, reciprocating—starting unloaded	40	60	150	0.2-15
56	Wood hogs	60	50	250	30-100

*The pull-in torque varies with the design and operating conditions. The machinery manufacturer should be consulted.

**For horizontal shaft pumps and vertical shaft pumps having no thrust bearing (entire thrust load carried by the motor), the locked-rotor torque required is usually between 5 and 20 percent, while for vertical shaft machines having their own thrust bearing a locked-rotor torque as high as 40 percent is sometimes required.

†The pull-in torque required varis with the design of the refiner. The machinery manufacturer should be consulted. Furthermore, even though 50 percent pull-in torque is adequate with the plug out, it is sometimes considered desirable to specify 100 percent to cover the possibility that a start will be attempted without complete retraction of the plug.

††The pull-out torque varies depending upon the rolling schedule.

Copyright National Electrical Manufacturers Association
Provided by IHS under license with NEMA
No reproduction or networking permitted without license from IHS

Not for Resale

The compressor factor which will be provided by a synchronous motor is a function of the total Wk^2 of the rotating parts (motor, compressor, and flywheel) and certain motor characteristics as given by the formula:

$$C = \frac{0.746 \times Wk^2 \times (n)^4}{P_r \times f \times 10^8}$$

Where:

W, k, n, P_r, and f are as defined in 21.87.

This means that the total Wk^2 must have a value:

$$Wk^2 = \frac{C \times f \times P_r \times 10^8}{0.746 \times (n)^4}$$

Where:

C is within the range of acceptable values for the compressor application involved.

For most of the compressor applications listed in Table 21-9, the compressor factor must be within a single range of values for a given current pulsation. For certain applications, however, two ranges of values are shown. The lower range is commonly referred to as the "loop" since it corresponds to a loop or valley in the curve of current pulsations versus compressor factor for that application.

The motor characteristic, P_r, increases with an increase in line voltage or the excitation current and decreases with a reduction in these operating variables. Since the compressor factor provided by a motor varies inversely with the value of P_r, an increase in line voltage or excitation current will reduce the value of compressor factor provided and vice versa. Hence, if the line voltage or excitation current are expected to depart appreciably from rated values (on which the value of P_r is based), it may by necessary to take this into account by placing narrower limits on the range of values for the compressor factor than those shown in Table 21-9. This is particularly important if the Wk^2 selected gives a compressor factor in the "loop" since then either an increase or a decrease in the compressor factor may increase the current pulsation.

The compressor factors in Table 21-9 were calculated for typical values of the physical characteristics for each type of compressor and, therefore, a compressor factor within the range of values shown will, in most cases, limit the current pulsation to the value indicated. Particular cases will, however, occur where a compressor and its operating conditions correspond to one of the applications listed, and yet a compressor factor within a narrower range must be provided to limit the current pulsation to the value indicated because the compressor characteristics differ significantly from those assumed.

21.90 SURGE CAPABILITIES OF AC WINDINGS WITH FORM-WOUND COILS

Surge withstand capabilities of armature winding shall be as per 20.87.

21.91 MACHINES OPERATING ON AN UNGROUNDED SYSTEM

Alternating-current machines are intended for continuous operation with the neutral at or near ground potential. Operation on ungrounded systems with one line at ground potential should be done only for infrequent periods of short duration, for example as required for normal fault clearance. If it is intended to operate the machine continuously or for prolonged periods in such conditions, a special machine with a level of insulation suitable for such operation is required. The motor manufacturer should be consulted before selecting a motor for such an application.

Grounding of the interconnection of the machine neutral points should not be undertaken without consulting the System Designer because of the danger of zero-sequence components of currents of all frequencies under some operating conditions and the possible mechanical damage to the winding under line-to-neutral fault conditions.

Other auxiliary equipment connected to the motor such as, but not limited to, surge capacitors, power factor correction capacitors, or lightning arrestors, may not be suitable for use on an ungrounded system and should be evaluated independently.

21.92 OCCASIONAL EXCESS CURRENT

Synchronous motors while running and at rated temperature shall be capable of withstanding a current equal to 150 percent of the rated current for 30s.

Excess capacity is required for the coordination of the motor with the control and protective devices. The heating effect in the machine winding varies approximately as the product of the square of the current and the time for which this current is being carried. The overload condition will thus result in increased temperatures and a reduction in insulation life. The motor should therefore not be subjected to this extreme condition for more than a few times in its life.

Copyright National Electrical Manufacturers Association
Provided by IHS under license with NEMA
No reproduction or networking permitted without license from IHS

Not for Resale

Copyright National Electrical Manufacturers Association
Provided by IHS under license with NEMA
No reproduction or networking permitted without license from IHS

Table 21-9
COMPRESSOR FACTORS

Application No.	Application (Description)	Compressor Factor *C*		
		66% Pulsation	40% Pulsation	20% Pulsation
	Ammonia or Freon—Horizontal—Single-stage—Equal Suction (Discharge Pressure 100–250 Psi)			
1	One cylinder, double-acting, single-stage.	14.0 and over	20.0 and over	28.0 and over
3	One-cylinder, HDA ammonia or freon compressor half load by using clearance pocket on head end.	28.0 and over	40.0 and over	72.0 and over
5	Two-cylinder, double-acting, single-stage, 90-degree cranks for duplex operation only.	2.0 to 6.0 or 12.0 and over	3.5 to 4.5 or 14.0 and over	20.0 and over
7	Two-cylinder, double-acting, single-stage, 90-degree cranks for single-cylinder operation, with one crank disconnected. (When both cranks are connected and both cylinders are operating normally, this becomes equivalent to Application 5 and the current variation will generally be less and will never exceed the values given for Application 7.)	12.0 and over	14.0 and over	20.0 and over
9	Two-cylinder, double-acting, single-stage, 90-degree cranks for duplex operation with clearance pockets on all cylinder ends, balanced operation at all loads. NOTE—The current variation may be 125 percent if unbalanced operation of clearance pockets is used. (Note approved as Authorized Engineering Information.)	2.0 to 6.0 or 12.0 and over	3.5 to 4.5 or 14.0 and over	20.0 and over
11	Two-cylinder, double-acting, single-stage, 90-degree cranks, with clearance pockets at one end of each cylinder to completely unload that cylinder end. (Under balanced operation with clearance pockets not in use, this becomes equivalent to Application 5 and the current variation will generally be less and will never exceed the values given for Application 11.)	16.0 and over	21.0 and over	32.5 and over
	Ammonia or Freon—Horizontal—Two-stage—Equal Suction (Discharge Pressure 100–250 Psi)			
21	Two-cylinder, double-acting, two-stage, 90-degree cranks—no partial capacity operation.	13.0 and over	16.0 and over	23.0 and over
23	Two-cylinder, double-acting, two-stage, 90-degree cranks for duplex operation with clearance pockets on all cylinder ends and with balanced operation at all loads.	13.0 and over	16.0 and over	23.0 and over
25	Two-cylinder, double-acting, two-stage, 90-degree cranks, with clearance pockets at one end of each cylinder to completely unload that cylinder end. (Under balanced operation with clearance pockets not in use, this becomes equivalent to Application 21 and the current variation will generally be less and will never exceed the values given for Application 25.)	17.0 and over	23.0 and over	35.5 and over

(Continued)

Not for Resale

Copyright National Electrical Manufacturers Association
Provided by IHS under license with NEMA
No reproduction or networking permitted without license from IHS

Table 21-9 *(Continued)*

Application No.	Application (Description)	Compressor Factor *C* 66% Pulsation	40% Pulsation	20% Pulsation
	Ammonia or Freon—Vertical—Single-stage—Equal Suction (Discharge Pressure 100–250 Psi)			
41	Two-cylinder, vertical, single-acting, single-stage, 180-degree cranks. The value of compressor factor *C* to use depends upon the weight of reciprocating parts as determined by factor called "Q." $$Q = \frac{0.065 \times W \times R^2 \times (S/100)^3}{I.\ Hp.}$$ where W = weight of reciprocating parts per cylinder. R = crank radius, in feet. S = revolutions per minute. I. Hp. = indicated horsepower of both cylinders, total.			
	For values of Q of 0.2 to 0.4	9.5 or over	14.5 and over	26.0 and over
	For values of Q of 0.4 to 0.6	8.5 or over	13.0 and over	23.0 and over
	For values of Q of 0.6 to 0.8	7.5 or over	11.0 and over	19.5 and over
	For values of Q of 0.8 to 1.0	6.5 or over	9.5 and over	16.5 and over
	For values of Q of 1.0 to 1.4	5.7 or over	8.0 and over	14.0 and over
43	Two-cylinder, vertical, single-acting, cranks at 180 degrees, with by-passes at one-third or one-half of piston stroke, to reduce capacity. By-passes always opened together for balanced operation.	9 and over	13.5 and over	25.0 and over
45	Two-cylinder, vertical, single-acting, cranks at 180 degrees, single-stage. Half load by closing inlet valve on one cylinder.	40 and over	60.0 and over	111.0 and over
47	Twin vertical, two-cylinder, single-acting, single-stage, for twin operation only with cranks of the two compressors set at 90 degrees. (This application consists of two identical independent compressors, each V.D.S.A. with one motor between arranged for driving both compressors.)	2.5 and over	4.0 and over	7.0 and over
49	Twin vertical, two-cylinder, single-acting, single-stage, with cranks of the two compressors set at 90 degrees as in Application 47, except when used for single compressor operation, that is, motor arranged for driving only one compressor. (When both compressors are operating this becomes equivalent to Application 47 and the current variation will generally be less and will never exceed the values given for Application 49.)	6 and over	8.0 and over	15.0 and over
51	Three-cylinder, vertical, single-acting, single-stage, cranks at 120 degrees.	35.5 and over	5.5 and over	9.5 and over
53	Three-cylinder, vertical, single-acting, single-stage, cranks at 120 degrees with by-passes at one-third or one-half of piston stroke, to reduce capacity. By-passes always opened together for balanced operation.	3.5 and over	5.5 and over	9.5 and over

(Continued)

Not for Resale

Copyright National Electrical Manufacturers Association
Provided by IHS under license with NEMA
No reproduction or networking permitted without license from IHS

Table 21-9 *(Continued)*

Application No.	Application (Description)	Compressor Factor *C* 66% Pulsation	40% Pulsation	20% Pulsation
	Ammonia or Freon—Vertical—Single-stage—Equal Suction (Discharge Pressure 100–250 Psi) *(Continued)*			
55	Twin, three-cylinder, vertical, single-acting, single-stage for twin operation only with cranks of the two compressors set at 60 degrees. (This application consists of two identical independent compressors, with one motor between arranged for driving both compressors.)	1 and over	2.0 and over	3.5 and over
57	Twin, three-cylinder, vertical, single-acting, single-stage, cranks of the two compressors set at 60 degrees as in Application 55 except when used for single compressor operation, that is, one compressor disconnected. (When both compressors are operating, this becomes equivalent to Application 55, and the current variation will generally be less and will never exceed the values given for Application 57.)	2.5 and over	4.0 and over	6.5 and over
58A	Four-cylinder, vertical, single-acting, cranks at 90 degrees. Operation at full load and no load only.	2.5 and over	4 and over	7 and over
58B	Four-cylinder, vertical, single-acting, cranks at 90 degrees. Capacity reduction by-passes on each cylinder operated together for balanced operation at all loads.	2.5 and over	4 and over	7 and over
58C	Four-cylinder, vertical, single-acting, cranks at 90 degrees with three-step control. Full load—all cylinders working normally. Three-quarters load—mid-stroke by-pass open on two cylinders whose cranks are 180 degrees apart. One-half load—mid-stroke by-pass open on all cylinders.	6 and over	11 and over	16 and over
58D	Four-cylinder, vertical, single-acting, cranks at 90 degrees with three-step control. Full load—all cylinders working normally. Three-quarters load—mid-stroke by-pass open on two cylinders whose cranks are 90 degrees apart. One-half load—mid-stroke by-pass open on all cylinders.	20 and over	25 and over	45 and over
58E	Four-cylinder, vertical, single-acting, cranks at 90 degrees with five-step control. Full load—all cylinders working normally. Seven-eighths load—mid-stroke by-pass open on one cylinder. Three-quarters load—mid-stroke by-pass open on cylinders whose cranks are 180 degrees apart. Five-eighths load—mid-stroke by-pass open on three cylinders. One-half load—mid-stroke by-pass open on all cylinders.	16 and over	20 and over	32 and over

(Continued)

Not for Resale

Copyright National Electrical Manufacturers Association
Provided by IHS under license with NEMA
No reproduction or networking permitted without license from IHS

Table 21-9 *(Continued)*

Application No.	Application (Description)	Compressor Factor *C* 66% Pulsation	40% Pulsation	20% Pulsation
	Ammonia or Freon—Vertical—Single-stage—Equal Suction (Discharge Pressure 100–250 Psi) *(Continued)*			
58F	Four-cylinder, vertical, single-acting, cranks at 90 degrees with five-step control. Full load—all cylinders working normally. Seven-eighths load—mid-stroke by-pass open on one cylinder. Three-quarters load—mid-stroke by-pass open on two cylinders whose cranks are 90 degrees apart. Five-eighths load—mid-stroke by-pass open on three cylinders. One-half load—mid-stroke by-pass open on all cylinders.	20 and over	26 and over	45 and over
58G	Two-cylinder, vertical, single-acting, cranks at 180 degrees with three-step control. Full load—both cylinders working normally. Three-quarters load—mid-stroke by-pass open on one cylinder. One-half load—mid-stroke by-pass open on two cylinders.	20 and over	26 and over	42 and over

Ammonia or Freon—Split Suction—Horizontal—One-cylinder—Double-acting (Discharge Pressure 100–250 Psi)

	Pressures Suction Head-end	Pressures Suction Crank-end	Discharge			
61	5	20	185	23 and over	32.5 and over	55.0 and over
62	0	20	185	28 and over	40.0 and over	72.0 and over
63	20	5	185	26 and over	37.0	65.0 and over
64	20	0	185	30 and over	43.5 and over	78.0 and over

Ammonia or Freon—Split Suctions—Horizontal—Two-cylinder—Double-acting—Cranks at 90 Degrees (Discharge Pressure 100–250 Psi)

	Pressures Suction Leading Cylinder		Pressures Suction Lagging Cylinder					
	Head-end	Crank-end	Head-end	Crank-end	Discharge			
81	5	20	20	20	185	16.5 and over	22.0 and over	34.5 and over
82	0	20	20	20	185	19.5 and over	26.5 and over	44.0 and over
83	20	5	20	20	185	19.0 and over	26.0 and over	42.0 and over
84	20	0	20	20	185	22.0 and over	30.5 and over	52.0 and over
85	20	20	5	20	185	14.5 and over	19.0 and over	28.0 and over
86	20	20	0	20	185	17.0 and over	22.5 and over	36.0 and over
87	20	20	20	5	185	17.0 and over	22.5 and over	36.0 and over
88	20	20	20	0	185	20.0 and over	27.5 and over	45.5 and over
89	5	20	5	20	185	18.0 and over	24.0 and over	39.0 and over
90	0	20	0	20	185	21.0 and over	29.0 and over	48.5 and over
91	20	5	20	5	185	21.0 and over	29.0 and over	48.5 and over
92	20	0	20	0	185	23.0 and over	32.0 and over	55.0 and over

(Continued)

Not for Resale

Copyright National Electrical Manufacturers Association
Provided by IHS under license with NEMA
No reproduction or networking permitted without license from IHS

Table 21-9 *(Continued)*

Application No.	Application (Description)	Compressor Factor *C*		
		66% Pulsation	40% Pulsation	20% Pulsation
	Ammonia or Freon—Split Suctions—Vertical—Two-cylinder—Single-acting—Cranks at 180 Degrees (Discharge Pressure 100–250 Psi)			
101	Five lbs suction on one cylinder, 20 lbs suction on the other, with 185 lbs discharge on both cylinders.	22.5 and over	31.5 and over	54.0 and over
103	Zero lbs suction on one cylinder, 20 lbs suction on the other, with 185 lbs discharge on both cylinders.	25.0 and over	35.5 and over	62.0 and over
	Ammonia or Freon—Split Suctions—Vertical—Three-cylinder—Single-acting (Discharge Pressure 100–250 Psi)			
121	Five lbs suction on one cylinder, 20 lbs suction on both of the other two cylinders, with 185 lbs discharge on all cylinders.	16.5 and over	22.0 and over	35.0 and over
123	Zero lbs suction on one cylinder, 20 lbs suction on both of the other two cylinders, with 185 lbs discharge on all three cylinders.	19.5 and over	26.5 and over	44.0 and over
	Air—Single-stage (Based on Standard Pressures Not Over 160 Psi)			
141	Single-cylinder, double-acting, single-stage, two-step control. Full load—both cylinder ends working normally. No load—all suction valves lifted.	14.5 and over	20.0 and over	30.0 and over
143	Single-cylinder, double-acting, single-stage, suction valve held open at head-end.	40 and over	60.0 and over	111.0 and over
145	Two-cylinder, double-acting, cranks at 90 degrees, two-step control. Full load—all cylinder ends working normally. No load—operating with all suction valves lifted.	3.0 to 5.5 or 12.5 and over	15.5 and over	21.5 and over
147	Two-cylinder, double-acting, cranks at 90 degrees, three-step control. Full load—all cylinder ends working normally. One-half load—suction valves lifted on both ends of "lagging" cylinder. No load—suction valves lifted on both ends of both cylinders.	14.0 and over (for worst condition)	19.0 and over	27.0 and over
148	Two-cylinder, double-acting, three-step control. Cylinders mounted on vertical frame with cranks at 180 degrees. Full load—all cylinder ends working normally. One-half load—suction valves lifted on two crank ends, two head ends working normally. No load— all suction valves lifted.	9.5 and over	14.5 and over	26.0 and over
149	Two-cylinder, double-acting, cranks at 90 degrees, five-step control. Full load—all cylinder ends working normally. Three-quarters load—suction valves lifted on head-end of "lagging" cylinder. One-half load—suction valves lifted on both ends of "lagging" cylinder. One-quarter load—suction valves lifted on both ends of "lagging" cylinder and also head-end of "leading" cylinder. No load—suction valves lifted on both ends of both cylinders.	25.0 and over (for worst condition)	38.0 and over	66.0 and over

(Continued)

Not for Resale

Copyright National Electrical Manufacturers Association
Provided by IHS under license with NEMA
No reproduction or networking permitted without license from IHS

Table 21-9 *(Continued)*

Application No.	Application (Description)	Compressor Factor *C*		
		66% Pulsation	40% Pulsation	20% Pulsation
	Air—Single-stage (Based on Standard Pressures Not Over 160 Psi) *(Continued)*			
151	Two-cylinder, double-acting, cranks at 90 degrees, with any step unloading by clearance pockets maintaining balanced operation at all loads.	3.0 to 5.5 or 12.5 and over	16.0 and over	21.5 and over
153	Four-cylinder, double-acting, tandem duplex (the two cylinders of each frame operated by a single connecting rod with the cylinders on same side of shaft or on opposite sides with tie rod), with 90 degrees between the cranks on the two frames, with five-step control.			
	Full load—all cylinder ends working normally.			
	Three-quarters load—suction valves lifted on crank-end of one cylinder and head-end of other cylinder on one side.			
	One-half load—suction valves lifted on head-end of one cylinder, and crank-end of other cylinder on both sides.			
	One-quarter load—all suction valves in both cylinders on one side lifted, and suction valves on crank-end of one cylinder and head-end of other cylinder on other side lifted.	4.5 to 6 or 12.5 and over	16.0 and over	21.5 and over
155	Four-cylinder, double-acting, opposed duplex (the two cylinders of each frame on opposite sides of shaft operated by individual connecting rods driven by a single crank), with 90 degrees between the cranks of the two frames, with five-step control.			
	Full load—all cylinder ends working normally.			
	Three-quarters load—suction valves lifted on both head-ends, or both crank-ends, of one opposed frame.			
	One-half load—suction valves lifted on all head-ends, or all crank-ends.			
	One-quarter load—all suction valves lifted on both cylinders of one opposed frame and on both head-ends, or on both crank-ends of the opposed frame.			
	No load—all suction valves lifted.	4.5 and over	6.0 and over	10.0 and over

(Continued)

Not for Resale

Copyright National Electrical Manufacturers Association
Provided by IHS under license with NEMA
No reproduction or networking permitted without license from IHS
Not for Resale

Table 21-9 *(Continued)*

Application No.	Application (Description)	Compressor Factor *C*		
		66% Pulsation	40% Pulsation	20% Pulsation
	Air—Single-stage (Based on Standard Pressures Not Over 160 Psi) *(Continued)*			
157	Four-cylinder, double-acting, balanced opposed duplex (the two cylinders of each frame on oppostie sides of shaft operated by individual connecting rods and individual cranks 180 degrees apart), with 90 degrees between the cranks of the two frames, with five-step control. Full load—all cylinder ends working normally. Three-quarters load—suction valves lifted on head-end of one cylinder, crank-end of other cylinder on one opposed frame. One-half load—suction valves lifted on head-end of one cylinder and crank-end of opposed cylinder on each frame. One-quarter load—all suction valves lifted on both cylinders of one opposed frame and on head-end of one cylinder and crank-end of the other cylinder on second opposed frame. No load—all suction valves lifted.	4.5 to 5.5 or 12.5 and over	16.0 and over	21.5 and over
	Air—Two-stage (Based on Standard Pressures Not Over 160 Psi)			
161	Two-cylinder, double-acting, cranks at 90 degrees, with two-step control. Full load—all cylinder ends working normally. No load—suction valves lifted on both ends of both cylinders.	4.0 to 5.0 or 13.5 and over	17.5 and over	24.5
163	Two-cylinder, double-acting, cranks at 90 degrees, with three-step control. Full load—all cylinder ends working normally. One-half load—suction valves lifted on end of each cylinder (it makes no difference which end of either cylinder). No load—all suction valves lifted.	26.0 and over (for worst condition)	37.0 and over	65.0 and over
165	Two-cylinder, double-acting, cranks at 90 degrees, with four-step control. Full load—all cylinder ends working normally. Three-quarters load—head-end of high pressure cylinder and crank-end of low-pressure cylinder on clearance pockets. One-half load—all ends on clearance pockets. No load—all suction valves lifted.	13.5 and over (for worst condition)	17.5 and over	24.5 and over
167	Two-cylinder, double-acting, cranks at 90 degrees, with any step control. All steps of unloading accomplished by clearance pockets maintaining balanced operation at all loads.	4.0 to 5.0 or 13.5 and over	17.5 and over	24.5 and over

(Continued)

Copyright National Electrical Manufacturers Association
Provided by IHS under license with NEMA
No reproduction or networking permitted without license from IHS

Table 21-9 *(Continued)*

Application No.	Application (Description)	Compressor Factor *C*		
		66% Pulsation	40% Pulsation	20% Pulsation
	Air—Two-stage (Based on Standard Pressures Not Over 160 Psi) *(Continued)*			
169	Two-cylinder, double-acting, cranks at 90 degrees, with five step control. Full load—all cylinder ends working normally. Three-quarters load—head-end of high-pressure cylinder and crank-end of low-pressure cylinder on clearance pockets. One-half load—all ends of both cylinders on clearance pockets. One-quarter load—suction valves lifted on head-end of high-pressure cylinder and crank-end of low-pressure cylinder. Opposite ends of cylinders on clearance pockets. No load—all suction valves lifted.	24.0 and over (for worst condition)	34.0 and over	58.5 and over
171	Two-cylinder, double-acting, cranks at 90 degrees, with five-step control. Full load—all cylinder ends working normally. Three-quarters load—two head-ends working normally, two crank-ends on clearance pockets. One-half load—suction valves lifted on two head-ends. Two crank-ends working normally. One-quarter load—suction valves lifted on two head-ends. Two crank-ends on clearance pockets. No load—all suction valves lifted.	26.0 and over (for worst condition)	38.0 and over	65.0 and over
173	Three-cylinder (two low-pressure cylinders in tandem), double-acting, cranks at 90 degrees, two-stage, with five-step control. Full load—all cylinder ends working normally. Three-quarters load—suction valves lifted on head-end of one low-pressure cylinder. One-half load—suction valves lifted on both ends of one low-pressure cylinder, and on crank-end of high-pressure cylinder. One-quarter load—suction valves lifted on both ends of one low-pressure cylinder, one end of other low-pressure cylinder, and crank-end of high-pressure cylinder. No load—all suction valves lifted.	17.5 and over (for worst condition)	23.5 and over	37.5 and over

(Continued)

Not for Resale

Copyright National Electrical Manufacturers Association
Provided by IHS under license with NEMA
No reproduction or networking permitted without license from IHS

Table 21-9 *(Continued)*

Application No.	Application (Description)	Compressor Factor *C*		
		66% Pulsation	40% Pulsation	20% Pulsation
	Air—Two-stage (Based on Standard Pressures Not Over 160 Psi) *(Continued)*			
175	Four-cylinder, double-acting, tandem duplex (one high-pressure cylinder and one low-pressure cylinder on each frame operated by a single connecting rod with the cylinders on same side of shaft, or on opposite sides with a tie rod), with 90 degrees between the cranks of the two frames, with five-step control.			
	Full load—all cylinder ends working normally.			
	Three-quarters load—suction valves on head-end of low-pressure cylinder, and crank-end of high-pressure cylinder, on one side lifted.			
	One-half load—suction valves lifted on head-ends of both low-pressure cylinders, and on crank-ends of both high-pressure cylinders.			
	One-quarter load—all suction valves in both cylinders on one side lifted, and suction valves on crank-end of low-pressure cylinder and head-end of high-pressure cylinder on other side lifted.	4.5 to 6.0 or 12.5 and over (for worst condition)	16.0 and over	21.5 and over
	No load—all suction valves lifted.			
177	Two-cylinder, double-acting, cranks at 90 degrees, with three-step control.			
	Full load—all cylinder ends working normally.	3.0 to 5.0 or 13.5 and over (for worst condition)	17.5 and over	24.5 and over
	Sixty-percent load—head-ends on clearance pockets.			
	No load—all suction valves lifted.			
179	Two-cylinder, double-acting, single-crank cylinders set at 90 degrees, angle compound air compressors, full- and no-load only, single-crank.	3.5 to 7.0 or 11.5 and over	14.0 and over	19.0 and over
181	Twin, two-cylinder, double-acting, angle compound air compressors, 180 degrees apart, twin operation only.	2.0 and over	3.5 and over	5.0 and over
183	Four-cylinder, double-acting, opposed duplex (one high-pressure cylinder and one low-pressure cylinder on each frame on opposite sides of shaft and operated by individual connecting rods driven by a single crank), with 90 degrees between the cranks of the two frames, with five-step control.			
	Full load—all cylinder ends working normally.			
	Three-quarters load—crank-ends of all cylinders on clearance pockets, all other cylinder ends working normally.			
	One-half load—suction valves lifted on crank-ends all cylinders, all other cylinder ends working normally.			
	One-quarter load—suction valves lifted on head-ends all cylinders, the crank-ends of all cylinders on clearance pockets.	4.5 to 5.5 or 12.5 and over	16.0 and over	21.5 and over
	No load—all suction valves lifted.			

(Continued)

Not for Resale

Copyright National Electrical Manufacturers Association
Provided by IHS under license with NEMA
No reproduction or networking permitted without license from IHS

Table 21-9 *(Continued)*

Application No.	Application (Description)	Compressor Factor *C* 66% Pulsation	40% Pulsation	20% Pulsation
	Air—Two-stage (Based on Standard Pressures Not Over 160 Psi) *(Continued)*			
187	Four-cylinder, double-acting, balanced opposed duplex (one high-pressure cylinder and one low-pressure cylinder on each frame on opposite sides of shaft and operated by individual connecting rods and individual cranks 180 degrees apart), with 90 degrees between the cranks of the two frames, with five-step control. Full load—all cylinder ends working normally. Three-quarters load—head-end of high-pressure cylinder and crank-end of low-pressure cylinder on both frames on clearance pockets, all other cylinder ends working normally. One-half load—suction valves lifted on all cylinder ends on one opposed frame, the cylinders of other opposed frames working normally. One-quarter load—suction valves lifted on all cylinder ends of one opposed frame, the head-end of high-pressure cylinder and crank-end of low-pressure cylinder on clearance pockets and opposite ends of same cylinders working normally. No load—all suction valves lifted.	13.0 and over	16.5 and over	23.0 and over
189	Two-cylinder (cylinders mounted on vertical frame with cranks at 180 degrees), double-acting, with three-step control. Full load—both cylinders working normally. One-half load—suction valves lifted on two crank-ends, two head-ends working normally. No load—all suction valves lifted.	13.0 and over	16.5 and over	23.0 and over

CO_2—Horizontal—Single-cylinder—Double-acting—Single-stage (Based on 300 to 450 Psi suction and 900 to 1500 Psi Discharge Pressure)

	Piston Rod Diameter in Percent of Piston Diameter	Percent Unbalance			
191	30	4 1/2	18 and over	24.0 and over	39.5 and over
192	40	8	21 and over	28.5 and over	49.0 and over
193	50	12 1/2	25 and over	35.5 and over	62.0 and over
194	60	18	30 and over	43.5 and over	78.0 and over

(Continued)

Not for Resale

Copyright National Electrical Manufacturers Association
Provided by IHS under license with NEMA
No reproduction or networking permitted without license from IHS

Table 21-9 *(Continued)*

Application No.	Application (Description)	Piston Rod Diameter in Percent of Piston Diameter	Percent Unbalance	Compressor Factor *C* 66% Pulsation	40% Pulsation	20% Pulsation
	CO_2—Horizontal or Vertical—Two-cylinder—Double-acting—Single-stage, with Cranks at 90 Degrees (Based on 300 to 450 Psi Suction and 900 to 1500 Psi Discharge Pressure)					
211		30	2 1/4	14 and over	18.0 and over	26.0 and over
212		40	4	17 and over	23.0 and over	35.5 and over
213		50	6 1/4	20 and over	27.0 and over	45.0 and over
214		60	9	23 and over	32.0 and over	55.0 and over
	CO_2—Horizontal—Two-cylinder—Double-acting—Single-stage, with Cranks at 180 Degrees (Based on 300 to 450 Psi suction and 900 to 1500 Psi Discharge Pressure)					
231	All. (The unbalance of one cylinder is offset by that of the other cylinder.)			8.5 and over	13.5 and over	23.0 and over
	CO_2—Horizontal or Vertical—Two-cylinder—Double-acting—Single-stage (Based on 300 to 450 Psi suction and 900 to 1500 Psi Discharge Pressure)					
251	Compressor with 30-percent clearance pockets each head-end, any unloading, with cranks at 180 degrees.			17 and over	23.0	36.5 and over
	CO_2—Horizontal or Vertical—Three-cylinder—Double-acting—Single-stage (Based on 300 to 450 Psi suction and 900 to 1500 Psi Discharge Pressure)					
271	Compressors without clearance pockets balanced operation.			2.0 and over	3.5 and over	5.0 and over
273	Compressor with 30-percent clearance pockets on each head-end, any unloading.			3.5 to 7.0 or 12.0 and over	14.5 and over	21.0 and over
	CO_2—Vertical—Single-stage—Equal Suction (Based on 300 to 450 Psi suction and 900 to 1500 Psi Discharge Pressure)					
291	Two-cylinder, single-acting, with cranks at 180 degrees.			9 and over	14.0 and over	25.0 and over
293	Twin, two-cylinder, single-acting, for twin operation only, with cranks of the two compressors set at 90 degrees.			2.5 and over	4.0 and over	7.0 and over
295	Twin, two-cylinder, single-acting, with cranks of the two machines set at 90 degrees as in Application 293, except when used for single compressor operation, that is, motor arranged for driving only one compressor. (When both compressors are operating this becomes equivalent to Application 293 and the current variation will generally be less and will never exceed the values given for Application 295.)			6.0 and over	8.0 and over	15.0 and over

Not for Resale

Section III

LARGE MACHINES

Part 22

LARGE MACHINES—SYNCHRONOUS GENERATORS (EXCLUSIVE OF GENERATORS FOR HYDRAULIC-TURBINE DRIVE ABOVE 10,000 kVA)

RATINGS

22.0 SCOPE

The standards in this Part 22 of Section III cover (1) synchronous generators built in frames larger than those required for synchronous generators having the continuous open-type ratings given in the table below, and (2) all ratings of synchronous generators of the revolving-field type of 450 rpm and slower speeds.

Synchronous Speed	Generators, Synchronous, Revolving Field Type, at 0.8 Power Factor	
	kVA	kW
3600	500	400
1800	500	400
1200	375	300
900	250	200
720	187	150
600	156	125
514	125	100

22.10 BASIS OF RATING

Synchronous generators shall be rated on a continuous duty basis, and the rating shall be expressed in kilovolt-amperes available at the terminals at 0.8-power-factor lagging (overexcited). The corresponding kilowatts shall also be stated.

22.11 KILOVOLT-AMPERE (kVA) AND KILOWATT (kW) RATINGS

The ratings for 60- and 50-hertz, 0.8-power-factor lagging (overexcited) synchronous generators shall be as shown in Table 22-1.

Table 22-1
KILOVOLT-AMPERE AND KILOWATT RATINGS

kVA	kW	kVA	kW	kVA	kW
62.5	50	1563	1250	31250	25000
75	60	1875	1500	37500	30000
93.8	75	2188	1750	43750	35000
125	100	2500	2000	50000	40000
156	125	2812	2250	62500	50000
				75000	60000
187	150	3125	2500		
219	175	3750	3000		
250	200	4375	3500		
312	250	5000	4000		
375	300	5625	4500		
438	350	6250	5000		
500	400	7500	6000		
625	500	8750	7000		
750	600	10000	8000		
875	700	12500	10000		
1000	800	15625	12500		
1125	900	18750	15000		
1250	1000	25000	20000		

NOTE—It is not practical to build synchronous generators of all kVA ratings at all speeds and for all voltage ratings.

22.12 SPEED RATINGS

Speed ratings shall be as shown in Table 22-2.

22.13 VOLTAGE RATINGS

Voltage ratings shall be as shown in Table 22-3. These voltage ratings apply to 60-hertz circuits only.

22.14 FREQUENCIES

Frequencies shall be 50 and 60 hertz.

22.15 EXCITATION VOLTAGES

The excitation voltages for field windings shall be 62½, 125, 250, 375, and 500 volts direct current. These excitation voltages do not apply to generators of the brushless type with direct-connected exciters.

NOTE—It is not practical to design all kVA ratings of generators for all of the excitation voltages.

Copyright National Electrical Manufacturers Association
Provided by IHS under license with NEMA
No reproduction or networking permitted without license from IHS

Not for Resale

Table 22-2
SPEED RATINGS

Number of Poles	Speed, Rpm	
	60 Hertz	50 Hertz
2	3600	3000
4	1800	1500
6	1200	1000
8	900	750
10	720	600
12	600	500
14	514	429
16	450	375
18	400	333
20	360	300
22	327	273
24	300	250
26	277	231
28	257	214
30	240	200
32	225	188
36	200	167
40	180	150
44	164	136
48	150	...
52	138	...

NOTE—It is not practical to build synchronous generators of all kVA ratings at all speeds and for all voltage ratings.

Table 22-3
VOLTAGE RATINGS, VOLTS

Three Phase
208Y/120
240
480
600
2400
4160Y/2400
4800
6900
13800

NOTE—It is not practical to build synchronous generators of all kVA ratings at all speeds and for all voltage ratings.

Copyright National Electrical Manufacturers Association
Provided by IHS under license with NEMA
No reproduction or networking permitted without license from IHS

Not for Resale

Copyright National Electrical Manufacturers Association
Provided by IHS under license with NEMA
No reproduction or networking permitted without license from IHS
Not for Resale

22.16 TYPICAL KILOWATT RATINGS OF EXCITERS FOR 0.8-POWER-FACTOR THREE-PHASE SYNCHRONOUS GENERATORS

Table 22-4
EXCITER RATINGS IN KILOWATTS FOR 60-HERTZ 0.8-POWER-FACTOR SYNCHRONOUS GENERATORS

Generator Rating		Speed, Rpm																		
kVA	kW	1800	1200	900	720	600	514	450	400	360	327	300	277	257	240	225	200	180	164	150
62.5	50	1.5	2.0	3.0	3.0	4.5	4.5	4.5	4.5	4.5	6.5	6.5	6.5	6.5	6.5	6.5	6.5	6.5	6.5	9.0
75	60	2.0	3.0	3.0	3.0	4.5	4.5	4.5	4.5	6.5	6.5	6.5	6.5	6.5	6.5	6.5	6.5	9.0	9.0	9.0
93.8	75	2.0	3.0	3.0	4.5	4.5	4.5	6.5	6.5	6.5	6.5	6.5	6.5	6.5	6.5	9.0	9.0	9.0	9.0	9.0
125	100	2.0	3.0	4.5	4.5	6.5	6.5	6.5	6.5	6.5	6.5	6.5	9.0	9.0	9.0	9.0	9.0	9.0	9.0	13
156	125	3.0	4.5	4.5	4.5	6.5	6.5	6.5	6.5	9.0	9.0	9.0	9.0	9.0	9.0	9.0	9.0	13	13	13
187	150	3.0	4.5	4.5	6.5	6.5	6.5	6.5	9.0	9.0	9.0	9.0	9.0	9.0	9.0	13	13	13	13	13
219	175	3.0	4.5	6.5	6.5	6.5	9.0	9.0	9.0	9.0	9.0	9.0	9.0	13	13	13	13	13	13	13
250	200	3.0	4.5	6.5	6.5	9.0	9.0	9.0	9.0	9.0	9.0	13	13	13	13	13	13	13	13	13
312	250	4.5	6.5	6.5	6.5	9.0	9.0	9.0	9.0	13	13	13	13	13	13	13	13	17	17	17
375	300	4.5	6.5	6.5	9.0	9.0	9.0	13	13	13	13	13	13	13	13	13	17	17	17	17
438	350	4.5	6.5	9.0	9.0	9.0	13	13	13	13	13	13	13	17	17	17	17	17	17	21
500	400	6.5	6.5	9.0	9.0	13	13	13	13	13	13	13	17	17	17	17	17	17	21	21
625	500	6.5	9.0	9.0	13	13	13	13	13	17	17	17	17	17	17	17	21	21	21	21
750	600	6.5	9.0	13	13	13	13	17	17	17	17	17	17	21	21	21	21	21	25	25
875	700	9.0	9.0	13	13	17	17	17	17	17	21	21	21	21	21	21	25	25	25	25
1000	800	9.0	13	13	13	17	17	17	17	21	21	21	21	21	25	25	25	25	25	33
1125	900	9.0	13	13	17	17	17	21	21	21	21	21	21	25	25	25	25	33	33	33
1250	1000	9.0	13	17	17	17	21	21	21	21	21	25	25	25	25	25	33	33	33	33
1563	1250	13	17	17	17	21	21	21	25	25	25	25	33	33	33	33	33	33	33	40
1875	1500	13	17	17	21	21	25	25	25	33	33	33	33	33	33	33	33	40	40	40
2188	1750	17	17	21	21	25	25	33	33	33	33	33	33	33	33	40	40	40	40	40
2500	2000	17	21	21	25	33	33	33	33	33	33	33	40	40	40	40	40	40	50	50
2812	2250	17	21	25	25	33	33	33	33	33	40	40	40	40	40	40	50	50	50	50
3125	2500	21	25	25	33	33	33	33	40	40	40	40	40	40	50	50	50	50	50	50
3750	3000	21	25	33	33	40	40	40	40	40	50	50	50	50	50	50	50	65	65	65
4375	3500	25	33	33	40	40	40	50	50	50	50	50	50	50	50	65	65	65	65	65
5000	4000	33	33	40	40	50	50	50	50	50	50	65	65	65	65	65	65	65	65	65
5625	4500	33	40	40	50	50	50	50	65	65	65	65	65	65	65	65	65	65	85	85
6250	5000	33	40	50	50	50	65	65	65	65	65	65	65	65	65	65	85	85	85	85
7500	6000	40	50	65	65	65	65	65	65	65	85	85	85	85	85	85	85	85	85	85
8750	7000	50	65	65	65	65	85	85	85	85	85	85	85	85	85	85	85	100	100	100

22.40 TEMPERATURE RISE

The observable temperature rise under rated-load conditions of each of the various parts of the synchronous generator, above the temperature of the cooling air, shall not exceed the values given in the following table. The temperature of the cooling air (see exception, Note 3 below) is the temperature of the external air as it enters the ventilating openings of the machine, and the temperature rises given in the table are based on a maximum temperature of 40°C for this external air. Temperatures shall be determined in accordance with IEEE Std 115.

22.41 MAXIMUM MOMENTARY OVERLOADS

Synchronous generators shall be capable of carrying a 1-minute overload with the field set for normal rated load excitation in accordance with Table 22-5.

Synchronous Speed, Rpm	Armature Current, Percent of Normal Rated Current
1801 and over	130
1800 and below	150

It is recognized that the voltage and power factor will differ from the rated load values when generators are subjected to this overload condition. Also, since the heating effect in the machine winding varies approximately as the product of the square of the current and the time for which this current is being carried, the overload condition will result in increased temperatures and a reduction in insulation life. The generator should therefore not be subjected to this extreme condition for more than a few times in its life. It is assumed that this excess capacity is required only to coordinate the generator with the control and protective devices.

Table 22-5
TEMPERATURE RISE

Item	Machine Part	Method of Temperature Determination	Temperature Rise, Degrees C* Class of Insulation System A	B	F	H
a.	Armature windings					
	1. All kVA ratings	Resistance	60	80	105	125
	2. 1563 kVA and less	Embedded detector**	70	90	115	140
	3. Over 1563 kVA					
	a) 7000 volts and less	Embedded detector**	65	85	110	135
	b) Over 7000 volts	Embedded detector**	60	80	105	125
b.	Field winding	Resistance	60	80	105	125
c.	The temperature attained by cores, amortisseur windings, collector rings, and miscellaneous parts (such as brushholders, brushes, pole tips, etc.) shall not injure the insulation or the machine in any respect.					

*For machines which operate under prevailing barometric pressure and which are designed not to exceed the specified temperature rise at altitudes from 3300 feet (1000 meters) to 13000 feet (4000 meters), the temperature rises, as checked by tests at low altitudes, shall be less than those listed in the foregoing table by 1 percent of the specified temperature rise for each 330 feet (100 meters) of altitude in excess of 3300 feet (1000 meters).

**Embedded detectors are located within the slot of the machine and can be either resistance elements or thermocouples. For machines equipped with embedded detectors, this method shall be used to demonstrate conformity with the standard. (See 20.63.)

NOTES

1—Temperature rises in the above table are based upon generators rated on a continuous duty basis. Synchronous generators may be rated on a stand-by duty basis (see 22.85). In such cases, it is recommended that temperature rises not exceed those in the foregoing table by more than 25°C under continuous operation at a stand-by rating.

2—Diesel engine specifications often call for machines which are suitable for 10-percent overload for 2 hours out of any 24 consecutive hours of operation. Generators having a corresponding overload capability are sometimes required. In such cases, it is recommended that the generators and their excitation systems be designed to deliver 110 percent of rated kVA at rated power factor, frequency, and voltage with temperature rises under rated load conditions not exceeding those given in the above table.

▲3—Temperature rises in the foregoing table are based upon a reference ambient temperature of 40°C. However, it is recognized that synchronous generators may be required to operate at an ambient temperature higher than 40°C. The temperature rises of the generators given in the foregoing table shall be reduced by the number of degrees that the ambient temperature exceeds 40°C.

(Exception—for totally enclosed water-air-cooled machines, the temperature of the cooling air is the temperature of the air leaving the coolers. Totally enclosed water-air-cooled machines are normally designed for the maximum cooling water temperature encountered at the location where each machine is to be installed. With a cooling water temperature not exceeding that for which the machine is designed:

a. On machines designed for cooling water temperature from 5°C to 30°C—the temperature of the air leaving the coolers shall not exceed 40°C.

b. On machines designed for higher cooling water temperatures—the temperature of the air leaving the coolers shall be permitted to exceed 40°C provided the temperature rises of the machine parts are then limited to values less than those given in the table by the number of degrees that the temperature of the air leaving the coolers exceeds 40°C.)

Copyright National Electrical Manufacturers Association
Provided by IHS under license with NEMA
No reproduction or networking permitted without license from IHS

Not for Resale

22.42 MAXIMUM DEVIATION FACTOR

The deviation factor of the open-circuit line-to-line terminal voltage of synchronous generators shall not exceed 0.1.

22.43 TELEPHONE INFLUENCE FACTOR (TIF)

The telephone influence factor of a synchronous generator is the measure of the possible effect of harmonics in the generator voltage wave on telephone circuits.

22.43.1 When specified, the balanced telephone influence factor (TIF) based on the weighting factors given in 22.43.3 shall not exceed the following values.

kVA Rating of Generator	TIF
125 to 4999	150
5000 to 19999	100
20000 and above	70

22.43.2 When specified, the residual component telephone influence factor based on the weighting factors given in 22.43.3 shall not exceed the following values. The residual component applies only to those generators having voltage ratings of 2000 volts and higher.

kVA Rating of Generator	TIF
	Residual
1000 to 4999	100
5000 to 19999	75
20000 and above	50

22.43.3 The single-frequency telephone influence weighting factors (TIF_f), according to the 1960 single frequency weighting are as listed in Table 22-6.

22.43.4 The telephone influence factor shall be measured in accordance with IEEE Std 115.

TIF shall be measured at the generator terminals on open circuit at rated voltage and frequency.

22.44 EFFICIENCY

Efficiency and losses shall be determined in accordance with IEEE Std 115. The efficiency shall be determined at rated output, voltage, frequency, and balanced load conditions.

Table 22-6
TIF_f—ACCORDING TO THE 1960 SINGLE FREQUENCY WEIGHTING

Frequency	TIF_f	Frequency	TIF_f
60	0.5	1860	7820
180	30	1980	8330
300	225	2100	8830
360	400	2160	9080
420	650	2220	9330
540	1320	2340	9840
660	2260	2460	10340
720	2760	2580	10600
780	3360	2820	10210
900	4350	2940	9820
1000	5000	3000	9670
1020	5100	3180	8740
1080	5400	3300	8090
1140	5630	3540	6730
1260	6050	3660	6130
1380	6370	3900	4400
1440	6650	4020	3700
1500	6680	4260	2750
1620	6970	4380	2190
1740	7320	5000	840
1800	7570		

The following losses shall be included in determining the efficiency:

a. I^2R loss of armature
b. I^2R loss of field
c. Core loss
d. Stray-load loss
e. Friction and windage loss[1]
f. Exciter loss if exciter is supplied with and driven from shaft of machine

Power required for auxiliary items, such as external pumps or fans, that are necessary for the operation of the generator shall be stated separately.

In determining I^2R losses, the resistance of each winding shall be corrected to a temperature equal to an ambient temperature of 25°C plus the observed rated-load temperature rise measured by resistance. When the rated-load temperature rise has not been measured, the resistance of the winding shall be corrected to the following temperature.

[1] In the case of generators which are furnished with thrust bearings, only that portion of the thrust bearing loss produced by the generator itself shall be included in the efficiency calculation. Alternatively, a calculated value of efficiency, including bearing loss due to external thrust load, shall be permitted to be specified.
In the case of generators which are furnished with less than a full set of bearings, friction and windage losses which are representative of the actual installation shall be determined by (1) calculation or (2) experience with shop test bearings and shall be included in the efficiency calculations.

Copyright National Electrical Manufacturers Association
Provided by IHS under license with NEMA
No reproduction or networking permitted without license from IHS
Not for Resale

Class of Insulation System	Temperature, Degrees C
A	75
B	95
F	115
H	130

This reference temperature shall be used for determining I^2R losses at all loads. If the rated temperature rise is specified as that of a lower class of insulation system, the temperature for resistance correction shall be that of the lower insulation class.

22.45 SHORT-CIRCUIT REQUIREMENTS

A synchronous generater shall be capable of withstanding, without injury, a 30-second,[1] three-phase short circuit at its terminals when operating at rated kVA and power factor, at 5-percent over-voltage, with fixed excitation. The generator shall also be capable of withstanding, without injury, any other short circuit at its terminals of 30 seconds[1] or less[1] provided:

a. The machine phase currents under fault conditions are such that the negative-phase-sequence current, (I_2), expressed in per unit of stator current at rated kVA, and the duration of the fault in seconds, t, are limited to values which give an integrated product, $(I_2)^2t$, equal to or less than:
   1. 40 for salient-pole machines
   2. 30 for air-cooled cylindrical rotor machines
b. The maximum phase current is limited by external means to a value which does not exceed the maximum phase current obtained from the three-phase fault.

NOTE—Generators subjected to faults between the preceding values of $(I_2)^2t$ and 200 percent of these values may suffer varying degrees of damage; for faults in excess of 200 percent of these limits, serious damage should be expected.

22.46 CONTINUOUS CURRENT UNBALANCE

A synchronous generator shall be capable of withstanding, without injury, the effects of a continuous current unbalance corresponding to a negative-phase-sequence current I_2 of the following values, providing the rated kVA is not exceeded and the maximum current does not exceed 105 percent of rated current in any phase. (Negative-phase-sequence current is expressed as a percentage of rated stator current.)

Type of Generator	Permissible I_2, Percent
Salient pole	
a. With connected amortisseur winding	10
b. With nonconnected amortisseur winding	8
Air-cooled cylindrical rotor	10

These values also express the negative-phase-sequence current capability at reduced generator kVA capabilities, as a percentage of the stator current corresponding to the reduced capability.

Continuous performance with nonconnected amortisseur windings is not readily predictable. Therefore, if unbalanced conditions are anticipated, machines with connected amortisseur windings should be specified.

22.47 OVERSPEEDS

Synchronous generators shall be so constructed that, in an emergency not to exceed 2 minutes, they will withstand without mechanical injury overspeeds above synchronous speed in accordance with the following.

Synchronous Speed, Rpm	Overspeed, Percent of Synchronous Speed
1801 and over	20
1800 and below	25

22.48 VARIATION FROM RATED VOLTAGE

Synchronous generators shall operate successfully at rated kVA, frequency, and power factor at any voltage not more than 5 percent above or below rated voltage, but not necessarily in accordance with the standards of performance established for operation at normal rating.

[1] With the voltage regulator in service, the allowable duration, t, of the short circuit shall be determined from the following equation in situations where the regulator is designed to provide ceiling voltage continuously during a short circuit.

$$t = \left(\frac{\text{Nominal field voltage}}{\text{Exciter ceiling voltage}}\right)^2 \times 30 \text{ seconds}$$

where nominal field voltage is the voltage across the generator field winding at rated load conditions.

Copyright National Electrical Manufacturers Association
Provided by IHS under license with NEMA
No reproduction or networking permitted without license from IHS

Not for Resale

22.49 SPECIFICATION FORM FOR SLIP-RING SYNCHRONOUS GENERATORS

The specification form for listing performance data on synchronous generators with slip rings shall be as follows.

Date _____

SLIP-RING SYNCHRONOUS GENERATOR RATING

kVA	Power Factor	kW	Rpm	Number of Poles	Phase	Hertz	Volts	Amperes	Frame

Description:

Is amortisseur winding included? _____

kVA	Power Factor	Temperature Rise (Degrees C) Not to Exceed			Excitation Requirements (Maximum)	
		Armature Winding		Field Winding		
		Resistance	Embedded Temperature Detector	Resistance	kW	Exciter Rated Voltage

Rating and temperature rise are based on cooling air not exceeding 40°C and altitude not exceeding 3300 feet (1000 meters). High-potential test in accordance with MG1-22.52. The rotor of the generator and the armature of the direct-connected exciter, when used, will stand an overspeed of _____ percent without mechanical injury.

Minimum Efficiencies							
kVA	Power Factor	kW		Full Load	¾ Load	½ Load	

Efficiencies are determined by including I^2R losses of armature and field windings at _____ °C, core losses, stray-load losses, and friction and windage losses.* Exciter loss is included if supplied with and driven from shaft of machine. Field rheostat losses are not included.

*1. In the case of a motor furnished with a thrust bearing, only that portion of the thrust bearing loss produced by the motor itself is included in the efficiency calculation.

2. In the case of motor furnished with less than a full set of bearings, friction and windage losses representative of the actual installation are included as determined by (a) calculation or (b) experience with shop test bearings.

Approximate Data	
Wk^2 of the Generator	Pr Synchronizing Power per Electrical Radian

Approximate Weight, Pounds			
Total Net	Rotor Net	Heaviest Part for Crane Net	Total Shipping

Copyright National Electrical Manufacturers Association
Provided by IHS under license with NEMA
No reproduction or networking permitted without license from IHS

Not for Resale

22.50 SPECIFICATION FORM FOR BRUSHLESS SYNCHRONOUS GENERATORS

The specification form for listing performance data on brushless synchronous generators shall be as follows.

Date _____

BRUSHLESS SYNCHRONOUS GENERATOR RATING

kVA	Power Factor	kW	Rpm	Number of Poles	Phase	Hertz	Volts	Amperes	Frame

Description:

Is amortisseur winding included? _____

kVA	Power Factor	Temperature Rise (Degrees C) Not to Exceed				Excitation Requirements* (2) (Maximum)	
			Armature Winding		Field Winding		
			Resistance	Embedded Temperature Detector	Resistance	Watts	Exciter Rated Field Voltage
		Generator					
		Exciter* (1)					

*For rotating transformer give (1) data for equivalent winding temperatures and (2) input kVA and voltage instead of excitation for exciter.

Rating and temperature rise are based on cooling air not exceeding 40°C and altitude not exceeding 3300 feet (1000 meters). High-potential test in accordance with MG1-22.52. The rotor of the generator and the armature of the direct-connected exciter, when used, will stand an overspeed of _____ percent without mechanical injury.

Minimum Efficiencies							
kVA	Power Factor	kW		Full Load	¾ Load	½ Load	

Efficiencies are determined by including I^2R losses of armature and field windings at _____ °C, core losses, stray-load losses, and friction and windage losses.** Exciter loss is included if supplied with and driven from shaft of machine. Field rheostat losses are not included.

**1. In the case of a motor furnished with a thrust bearing, only that portion of the thrust bearing loss produced by the motor itself is included in the efficiency calculation.

2. In the case of motor furnished with less than a full set of bearings, friction and windage losses representative of the actual installation are included as determined by (a) calculation or (b) experience with shop test bearings.

Approximate Data	
Wk^2 of the Generator	Pr Synchronizing Power per Electrical Radian

Approximate Weight, Pounds			
Total Net	Rotor Net	Heaviest Part for Crane Net	Total Shipping

Copyright National Electrical Manufacturers Association
Provided by IHS under license with NEMA
No reproduction or networking permitted without license from IHS

Not for Resale

NEMA MG*1 93 ■ 6470247 0506814 116 ■

22.51 ROUTINE TESTS

22.51.1 Generators Not Completely Assembled in the Factory

The following tests shall be made on all generators which are not completely assembled in the factory, including those furnished without a shaft or a complete set of bearings, or neither.

a. Resistance of armature and field windings
b. Polarity of field coils
c. High-potential test in accordance with 22.52

22.51.2 Generators Completely Assembled in the Factory

The following tests shall be made on generators which are completely assembled in the factory and furnished with a shaft and a complete set of bearings.

a. Resistance of armature and field windings
b. Check no-load field current at normal voltage and frequency.[1]
c. High-potential test in accordance with 22.52

22.52 HIGH-POTENTIAL TESTS

22.52.1 Safety Precautions and Test Procedures

See 3.01.

22.52.2 Test Voltage—Armature Windings

The test voltage for all generators (with the exception of those described in 22.52.6) shall be an alternating voltage whose effective value is 1000 volts plus twice the rated voltage of the machine but in no case less than 1500 volts.[2]

22.52.3 Test Voltage—Field Windings, Generators with Slip Rings

The test voltage for all generators with slip rings (with the exception of those described in 22.52.6) shall be an alternating voltage whose effective value is as follows.

a. Rated excitation voltage ≤ 500 volts direct current; ten times the rated excitation voltage but in no case less than 1500 volts
b. Rated excitation voltage > 500 volts direct current; 4000 volts plus twice the rated excitation voltage

22.52.4 Test Voltage—Assembled Brushless Generator Field Winding and Exciter Armature Winding

The test voltage for all assembled brushless generator field windings and exciter armature windings (with the exception of those described in 22.52.6) shall be an alternating voltage whose effective value is as follows.

a. Rated excitation voltage ≤ 350 volts direct current; ten times the rated voltage but in no case less than 1500 volts
b. Rated excitation voltage > 350 volts direct current; 2800 volts plus twice the rated excitation voltage

The brushless circuit components (diodes, thyristors, etc.) on an assembled brushless exciter and synchronous machine field wiring shall be short-circuited (not grounded) during the test.

22.52.5 Test Voltage—Brushless Exciter Field Winding

The test voltage for all brushless exciter field windings (with the exception of those described in 22.52.6) shall be an alternating voltage whose effective value is as follows.

a. Rated excitation voltage ≤ 350 volts direct current; ten times the rated excitation voltage but in no case less than 1500 volts
b. Rated excitation voltage > 350 direct current; 2800 volts plus twice the rated excitation voltage
c. Exciters with alternating-current excited stators (fields) shall be tested at 1000 volts plus twice the rated alternating-current voltage of the stator.

22.52.6 Exceptions to Test Voltages Given in 22.52.2 Through 22.52.5

For generators of less than 250 watts output and having rated voltages not exceeding 250 volts, the test voltage of the armature and field winding (including assembled brushless exciters) shall be an alternating voltage whose effective value is 1000 volts.

For generators whose armature or field windings are for connection to circuits of 35 volts or less, the test voltage for such a winding (including assembled brushless exciters) shall be an alternating voltage whose effective value is 500 volts.

22.53 MACHINE SOUND

See 20.50.

22.54 MECHANICAL VIBRATION ▲

See MG 1, Part 7.

---

[1] On generators having brushless excitation systems, check instead the exciter field current at no load with normal voltage and frequency on the generator.

[2] A direct instead of an alternating voltage is sometimes used for high-potential tests on primary windings of machines rated 6000 volts or higher. In such cases, a test voltage equal to 1.7 times the alternating-current test voltage (effective value) as given in 22.52.2 and 22.52.3 is recommended. Following a direct-voltage high-potential test, the tested winding should be thoroughly grounded. The insulation rating of the winding and the test level of the voltage applied determine the period of time required to dissipate the charge and, in many cases, the ground should be maintained for several hours to dissipate the charge to avoid hazard to personnel.

Copyright National Electrical Manufacturers Association
Provided by IHS under license with NEMA
No reproduction or networking permitted without license from IHS
Not for Resale

MANUFACTURING

22.60 LOCATION OF TERMINALS

On horizontal synchronous generators furnished without bearings (or with pedestal-type bearings) and without a conduit box, the recommended location of the armature winding terminals is at the bottom edge of the stator frame within 30 degrees of the vertical centerline. On all other types of horizontal synchronous generators, the recommended location is on the left-hand side of the generator, viewing the end of the generator opposite the drive.

22.61 NAMEPLATE MARKING ▲

The following information shall be given on all nameplates. For abbreviations, see 1.80.

a. Manufacturer's type and frame designation
b. Kilovolt-ampere output
c. Power factor
d. Time rating
e. Temperature rise[1]
f. Rated speed in rpm
g. Voltage
h. Rated current in amperes per terminal
i. Number of phases
j. Frequency
k. Rated field current[2]
l. Rated excitation voltage[2]

Some examples of additional information that may be included on the nameplate are:

m. Enclosure or IP code
n. Manufacturer's name, mark, or logo
o. Manufacturer's plant location
p. Serial number or date of manufacture

22.62 TOLERANCE LIMITS IN DIMENSIONS

The dimensions from the shaft center to the bottom of the feet shall be not greater than the nominal dimensions shown on the manufacturer's dimensions sheet. When the generator is coupled or geared to the driven machines, shims are usually required to secure accurate alignment.

22.63 GENERATOR TERMINAL

22.63.1 When generators covered by this Part 22 are provided with the terminal housings for wire-to-wire connections,[3] the housings shall have the following dimensions and usable volumes.

---

[1] As an alternate marking, this item shall be permitted to be replaced by the following.
a. Maximum ambient temperature for which the generator is designed (see 22.40, Note 3)
b. Insulation system designation (if armature and field use different classes of insulation systems, both insulation systems shall be given, that for the armature being given first).

[2] Applies to exciter in case of brushless machine

[3] Terminal housings containing surge capacitors, surge arrestors, current transformers, or potential transformers require individual consideration.

Copyright National Electrical Manufacturers Association
Provided by IHS under license with NEMA
No reproduction or networking permitted without license from IHS
Not for Resale

Voltage	kVA	Minimum Usable Volume, Cubic Inches	Minimum Dimension, Inches	Minimum Centerline Distance,* Inches
480	201–312, incl.	600	7	...
	313–500, incl.	1100	8	...
	501–750, incl.	2000	8	...
	751–1000, incl.	3200	10	...
2400	251–625, incl.	180	5	...
	626–1000, incl.	330	6	...
	1000–1563, incl.	600	7	...
	1564–2500, incl.	1100	8	...
	2501–3750, incl.	2000	8	...
4160	351–1250, incl.	2000	8	12.5
	1251–5000, incl.	5600	14	16
	5001–7500, incl.	8000	16	20
6900	876–3125, incl.	5600	14	16
	3126–8750, incl.	8000	16	20

*Minimum distance from the entrance plate for conduit entrance to the centerline of motor leads.

22.63.2 For generators rated 601 volts and higher, accessory leads shall terminate in a terminal box or boxes separate from the generator terminal housing. As an exception, current and potential transformers located in the generator terminal housing shall be permitted to have their secondary connections terminated in the generator terminal housing if separated from the generator leads by a suitable physical barrier to prevent accidental contact.

22.63.3 For generators rated 601 volts and higher, the termination of leads of accessory items normally operating at a voltage of 50 volts (rms) or less shall be separated from leads of higher voltge by a suitable physical barrier to prevent accidental contact, or shall be terminated in a separate box.

22.64 EMBEDDED TEMPERATURE DETECTORS

See 20.63.

APPLICATION DATA

22.80 PARALLEL OPERATION

Many of the factors which affect the parallel operation of generators are contained in the prime mover, and the characteristics of the equipment connected to the system with which the generator is to operate in parallel also impose conditions which should be taken into account in parallel operation.

When requested, the generator manufacturer should furnish the following and any other information as may be required, in determining the system requirements for successful parallel operation.

a. Synchronizing torque coefficient P_r. Unless otherwise specified the value of P_r should correspond to a pulsation frequency of one-half the rpm (see 21.87).
b. Wk^2 of the generator rotor

22.81 CALCULATION OF NATURAL FREQUENCY

See 21.87.

22.82 TORSIONAL VIBRATION

Excessive torsional vibration may result in overstressed shafts, couplings, and other rotating parts. Torsional vibration is difficult to determine and measure, and it is recommended that torsional stresses be investigated when generators are to be driven by prime movers producing periodic torque pulsations.

While the factors which affect torsional vibration are primarily contained in the design of the prime mover, the design of the generator rotor should also be considered. When requested, the generator manufacturer should furnish the Wk^2 and weight of the generator rotor, and any other information, such as the stiffness of the spider, as may be required to make a successful design of the combined unit.

Before the generator spider and such part of the shaft as may be furnished by the generator manufacturer are manufactured, the final drawings of the same should be submitted for approval insofar as their design affects torsional vibration.

22.83 SERVICE CONDITIONS

22.83.1 General

Generators should be properly selected with respect to their service conditions, usual or unusual, both of which involve the environmental conditions to which the machine is subjected and the operating conditions. Machines conforming to this Part 22 are designed for operation in accordance with their ratings under usual service conditions. Some machines may also be capable of operating in accordance with their ratings under one or more unusual service conditions. Definite-purpose or special-purpose machines may be required for some unusual conditions.

Service conditions, other than those specified as usual, may involve some degree of hazard. The additional hazard depends upon the degree of departure from usual operating conditions and the severity of the environment to which the machine is exposed. The additional hazard results from such things as overheating, mechanical failure, abnormal deterioration of the insulation system, corrosion, fire, and explosion.

Although experience of the user may often be the best guide, the manufacturer of the driving equipment and the generator manufacturer should be consulted for further information regarding any unusual service conditions which increase the mechanical or thermal duty on the machine and, as a result, increase the chances for failure

Copyright National Electrical Manufacturers Association
Provided by IHS under license with NEMA
No reproduction or networking permitted without license from IHS
Not for Resale

and consequent hazard. This further information should be considered by the user, his consultants, or others most familiar with the details of the application involved when making the final decision.

22.83.2 Usual Service Conditions

Usual service conditions include the following:

a. An ambient temperature in the range of 0°C to 40°C or, when water cooling is used, in the range of 5°C to 40°C
b. An altitude not exceeding 3300 feet (1000 meters)
c. A location or supplementary enclosure, if any, such that there is no serious interference with the ventilation of the generator

22.83.3 Unusual Service Conditions

The manufacturer should be consulted if any unusual service conditions exist which may affect the construction or operation of the generator. Among such conditions are:

a. Exposure to:
   1. Combustible, explosive, abrasive, or conducting dusts
   2. Lint or very dirty operating conditions where the accumulation of dirt will interfere with normal ventilation
   3. Chemical fumes, flammable or explosive gases
   4. Nuclear radiation
   5. Steam, salt-laden air, or oil vapor
   6 Damp or very dry locations, radiant heat, vermin infestation, or atmospheres conducive to the growth of fungus
   7. Abnormal shock or vibration from external sources
   8. Abnormal axial or side thrust imposed on the generators shaft
b. Operation where:
   1. There is excessive departure from rated voltage (see 22.48)
   2. Low noise levels are required
   3. Generator neutral will be solidly grounded (see 22.84)
c. Operation at speeds other than rated speed
d. Operation in a poorly ventilated room, in a pit, or in an inclined position
e. Operation where subjected to:
   1. Torsional vibration (see 22.82)
   2. Out-of-phase paralleling

22.84 NEUTRAL GROUNDING

For safety of personnel and to reduce over-voltages to ground, the generator neutral is often either grounded solidly or grounded through a resistor or reactor. When the neutral is grounded through a resistor or reactor properly selected in accordance with established power systems practices, there are no special considerations required in the generator design or selection unless the generator is to be operated in parallel with other power supplies. The neutral of a generator should not be solidly grounded unless the generator has been specifically designed for such operation. With the neutral solidly grounded, the maximum line-to-ground fault current may be excessive (see 22.45), and in parallel systems excessive circulating harmonic currents may be present in the neutrals.

22.85 STAND-BY GENERATOR

Synchronous generators are at times assigned a standby rating where the application is an emergency back-up power source and is not the prime power supply. Under such conditions, temperature rises up to 25°C above those for continuous-duty operation may occur in accordance with Note 1 of 22.40.

Operation at these stand-by temperature rise values causes the generator insulation to age thermally at about four to eight times the rate that occurs at the continuous-duty temperature rise values, i.e., operating 1 hour at stand-by temperature rise values is approximately equivalent to operating 4 to 8 hours at continuous-duty temperature rise values.

22.86 BELT, CHAIN, AND GEAR DRIVE

When generators are for belt, chain, or gear drive, the generator manufacturer should be consulted.

Copyright National Electrical Manufacturers Association
Provided by IHS under license with NEMA
No reproduction or networking permitted without license from IHS
Not for Resale

NEMA MG*1 93 ■ 6470247 0506150 880 ■

Section III
LARGE MACHINES
Part 23
LARGE MACHINES—DC MOTORS
LARGER THAN 1.25 HORSEPOWER PER RPM, OPEN TYPE

CLASSIFICATION

23.0 SCOPE

The standards in this Part 23 of Section III cover direct-current motors built in frames larger than that having a continuous dripproof rating, or equivalent capacity, of 1.25 horsepower per rpm, open type.

23.01 GENERAL INDUSTRIAL MOTORS

These motors are designed for all general industrial service (excepting metal rolling mill service) and may be designed, when specified, for operation at speeds above base speed by field weakening as indicated in Table 23-3 and Table 23-5.

23.02 METAL ROLLING MILL MOTORS

These motors are designed particularly for metal rolling mill service (except for reversing hot-mill service, see 23.03) and are known as either Class N or Class S metal rolling mill motors. They may be designed for operation with a single direction of rotation (nonreversing) or, if required, they may be designed for either direction of rotation (reversing). These motors differ in design from general industrial motors because of the requirements for this service which are as follows.

a. Continuous overload capability (see 23.41.2)
b. Heavy mechanical construction
c. High momentary overload (see 23.41)
d. Close speed regulation

23.02.1 Class N Metal Rolling Mill Motors

Class N metal rolling mill motors are normally designed for operation at a given base speed but, when specified, may be designed for operation at speeds above base speeds by field weakening as indicated in Table 23-3 and Table 23-5.

23.02.2 Class S Metal Rolling Mill Motors

Still higher speeds than those attained for Class N metal rolling mill motors by field weakening can be obtained, when specified, on metal rolling mill motors by using higher strength material, additional banding, and bracing. Such motors are known as Class S metal rolling mill motors. The maximum speeds recommended for operation of these motors are given in Table 23-4 and Table 23-6.

23.03 REVERSING HOT MILL MOTORS

These motors are designed particularly for application to reversing hot mills, such as blooming and slabbing mills. They are characterized by:

a. No continuous overload capability
b. Mechanical construction suitable for rapid reversal and for the sudden application of heavy loads
c. Higher momentary overload capacity (see 23.41.3)

RATINGS

23.09 BASIS OF RATING

Direct-current motors covered by this Part 23 shall be rated on a continuous-duty basis unless otherwise specified. The rating shall be expressed in horsepower available at the shaft at rated speed (or speed range) and voltage.

Copyright National Electrical Manufacturers Association
Provided by IHS under license with NEMA
No reproduction or networking permitted without license from IHS

Not for Resale

Copyright National Electrical Manufacturers Association
Provided by IHS under license with NEMA
No reproduction or networking permitted without license from IHS
Not for Resale

23.10 HORSEPOWER, SPEED, AND VOLTAGE RATINGS

23.10.1 General Industrial Motors and Metal Rolling Mill Motors, Classes N and S

Horsepower, base speed, and voltage ratings for these motors shall be those shown in Table 23-1.

Table 23-1

Hp	Base Speed, Rpm																				
	850	650	500	450	400	350	300	250	225	200	175	150	125	110	100	90	80	70	65	60	55	50
250	. . .	. . .	. . .	. . .	. . .	. . .	. . .	. . .	. . .	. . .	A	A	A	A	A	. . .	. . .	. . .	. . .	. . .	. . .	. . .
300	. . .	. . .	. . .	. . .	. . .	. . .	. . .	. . .	A	A	A	A	A	A	A	. . .	. . .	. . .	. . .	. . .	. . .	. . .
400	. . .	. . .	. . .	. . .	. . .	. . .	A	A	A	A	A	A	A	A	A	. . .	. . .	. . .	. . .	. . .	. . .	. . .
500	. . .	. . .	. . .	. . .	. . .	A	A	B	B	B	B	B	B	B	B	C	. . .	. . .	. . .	. . .	. . .	. . .
600	. . .	. . .	. . .	A	A	A	B	B	B	B	B	B	B	B	B	C	C	. . .	. . .	. . .	. . .	. . .
700	. . .	. . .	A	A	A	B	B	B	B	B	B	B	B	B	B	C	C	C	. . .	. . .	. . .	. . .
800	. . .	. . .	A	A	B	B	B	B	B	B	B	B	B	B	B	C	C	C	. . .	. . .	. . .	. . .
900	. . .	A	A	A	B	B	B	B	B	B	B	B	B	B	B	C	C	C	C	C	. . .	. . .
1000	. . .	B	B	B	B	B	B	B	B	B	B	B	B	B	B	C	C	C	C	C	C	. . .
1250	C	C	C	C	C	C	C	C	C	C	C	C	C	C	C	C	C	C	C	C	C	C*
1500	C	C	C	C	C	C	C	C	C	C	C	C	C	C	C	C	C	C	C	C	C*	C*
1750	C	C	C	C	C	C	C	C	C	C	C	C	C	C	C	C	C	C	C	C*	C*	C*
2000	. . .	C	C	C	C	C	C	C	C	C	C	C	C	C	C	C	C	C	C	C*	C*	C*
2250	. . .	C	C	C	C	C	C	C	C	C	C	C	C	C	C	C	C	C	C*	C*	C*	C*
2500	. . .	C	C	C	C	C	C	C	C	C	C	C	C	C	C	C	C	C*	C*	C*	C*	C*
3000	. . .	. . .	C	C	C	C	C	C	C	C	C	C	C	C	C	C	C	C*	C*	C*	C*	C*
3500	. . .	. . .	. . .	D	D	D	D	D	D	D	D	D	D	D	D	D*	D*	D*	D*	D*	D*	D*
4000	. . .	. . .	. . .	. . .	D	D	D	D	D	D	D	D	D	D	D	D*	D*	D*	D*	D*	D*	D*
4500	. . .	. . .	. . .	. . .	. . .	D	D	D	D	D	D	D	D	D	D	D*	D*	D*	D*	D*	D*	D*
5000	. . .	. . .	. . .	. . .	. . .	. . .	D	D	D	D	D	D	D	D	D*	D*	D*	D*	D*	D*	D*	D*
6000	. . .	. . .	. . .	. . .	. . .	. . .	. . .	. . .	. . .	. . .	D	D	D	D*	D*	D*	D*	D*	D*	D*	D*	D*
7000	. . .	. . .	. . .	. . .	. . .	. . .	. . .	. . .	. . .	. . .	. . .	D	D*	D*	D*	D*	D*	D*	D*	D*	D*	D*
8000	. . .	. . .	. . .	. . .	. . .	. . .	. . .	. . .	. . .	. . .	. . .	. . .	D*	D*	D*	D*	D*	D*	D*	D*	D*	D*

*These ratings are based on forced ventilation.
"A" indicates voltage rating at either 250 or 500 volts.
"B" indicates voltage ratings at either 250, 500, or 700 volts.
"C" indicates voltage rating at either 500 or 700 volts.
"D" indicates voltage rating at 700 volts, only.

Copyright National Electrical Manufacturers Association
Provided by IHS under license with NEMA
No reproduction or networking permitted without license from IHS

23.10.2 Reversing Hot Mill Motors

Horsepower, base speed, and voltage ratings for these motors shall be those shown in Table 23-2.

Table 23-2

	Base Speed, Rpm																
Hp	200	175	150	125	110	100	90	80	70	65	60	55	50	45	40	35	30
500	C	C	C	C	C	C	C	. . .	. . .	. . .	. . .	. . .	. . .	. . .	. . .	. . .	. . .
600	C	C	C	C	C	C	C	C	. . .	. . .	. . .	. . .	. . .	. . .	. . .	. . .	. . .
700	C	C	C	C	C	C	C	C	C	. . .	. . .	. . .	. . .	. . .	. . .	. . .	. . .
800	C	C	C	C	C	C	C	C	C	C	C	. . .	. . .	. . .	. . .	. . .	. . .
900	C	C	C	C	C	C	C	C	C	C	C	C	. . .	. . .	. . .	. . .	. . .
1000	C	C	C	C	C	C	C	C	C	C	C	C	C	C	C	C	C
1250	C	C	C	C	C	C	C	C	C	C	C	C	C	C	C	C	C
1500	C	C	C	C	C	C	C	C	C	C	C	C	C	C	C	C	C
1750	C	C	C	C	C	C	C	C	C	C	C	C	C	C	C	C	C
2000	C	C	C	C	C	C	C	C	C	C	C	C	C	C	C	C	C
2250	C	C	C	C	C	C	C	C	C	C	C	C	C	C	C	C	C
2500	. . .	C	C	C	C	C	C	C	C	C	C	C	C	C	C	C	C
3000	. . .	. . .	C	C	C	C	C	C	C	C	C	C	C	C	C	C	C
3500	. . .	. . .	. . .	D	D	D	D	D	D	D	D	D	D	D	D	D	D
4000	. . .	. . .	. . .	D	D	D	D	D	D	D	D	D	D	D	D	D	D
4500	. . .	. . .	. . .	. . .	D	D	D	D	D	D	D	D	D	D	D	D	D
5000	. . .	. . .	. . .	. . .	. . .	D	D	D	D	D	D	D	D	D	D	D	D
6000	. . .	. . .	. . .	. . .	. . .	. . .	D	D	D	D	D	D	D	D	D	D	D
7000	. . .	. . .	. . .	. . .	. . .	. . .	. . .	D	D	D	D	D	D	D	D	D	D
8000	. . .	. . .	. . .	. . .	. . .	. . .	. . .	D	D	D	D	D	D	D	D	D	D
9000	. . .	. . .	. . .	. . .	. . .	. . .	. . .	. . .	D	D	D	D	D	D	D	D	D
10000	. . .	. . .	. . .	. . .	. . .	. . .	. . .	. . .	. . .	D	D	D	D	D	D	D	D

"C" indicates voltage rating at either 500 or 700 volts
"D" indicates voltage rating at 700 volts, only

Not for Resale

Copyright National Electrical Manufacturers Association
Provided by IHS under license with NEMA
No reproduction or networking permitted without license from IHS
Not for Resale

23.11 SPEED RATINGS BY FIELD CONTROL FOR 250-VOLT DIRECT-CURRENT MOTORS

Speed ratings by field control shall be permitted to vary between the base speed and the speeds listed in Tables 23-3 and 23-4.

Table 23-3
GENERAL INDUSTRIAL MOTORS (SEE MG 1-23.01) AND METAL ROLLING MILL MOTORS, CLASS N (SEE MG 1-23.02)

	Base Speed, Rpm													
Hp	650	500	450	400	350	300	250	225	200	175	150	125	110	100
	Speed by Field Control, Rpm—Nonreversing Service*													
250	. . .	. . .	. . .	. . .	. . .	. . .	. . .	. . .	. . .	725	660	585	540	510
300	. . .	. . .	. . .	. . .	. . .	. . .	. . .	820	760	700	630	560	520	490
400	. . .	. . .	. . .	. . .	. . .	910	810	765	710	650	595	525	490	460
500	. . .	. . .	. . .	. . .	930	855	765	720	670	615	565	500	465	440
600	. . .	. . .	990	940	880	805	725	690	640	590	540	480	445	425
700	. . .	975	935	890	830	765	690	655	615	560	515	460	430	410
800	. . .	925	890	840	795	735	660	630	590	540	500	450	420	395
900	1000	875	845	800	760	700	630	605	570	525	480	435	405	385
1000	965	840	800	770	725	675	615	585	550	505	460	420	395	370

Table 23-4
METAL ROLLING MILL MOTORS, CLASS S (SEE MG 1-23.02)

	Base Speed, Rpm													
Hp	650	500	450	400	350	300	250	225	200	175	150	125	110	100
	Speed by Field Control, Rpm—Nonreversing Service*													
250	. . .	. . .	. . .	. . .	. . .	. . .	. . .	. . .	. . .	850	775	690	640	600
300	. . .	. . .	. . .	. . .	. . .	. . .	. . .	960	890	820	745	660	615	580
400	. . .	. . .	. . .	. . .	. . .	1060	950	890	830	765	695	620	575	545
500	. . .	. . .	. . .	. . .	1075	990	890	840	785	720	660	590	550	520
600	. . .	. . .	1135	1080	1010	930	840	800	745	690	630	565	525	500
700	. . .	1105	1070	1020	960	885	800	760	715	660	600	540	505	480
800	. . .	1040	1010	960	910	840	765	730	685	630	580	525	490	465
900	1110	985	950	915	870	805	735	700	660	610	560	510	475	450
1000	1050	935	905	870	830	775	710	675	640	590	540	490	460	435

*Speed ratings by field control of motors designed for reversing service (operation with either direction of rotation) shall be permitted to vary between the base speed and a speed equal to 90 percent of the value listed in the table.

NOTE—The speeds indicated in the above tables take into consideration both electrical and mechanical limitations. Operation at speeds above those indicated by increasing the armature voltage is not recommended.

Copyright National Electrical Manufacturers Association
Provided by IHS under license with NEMA
No reproduction or networking permitted without license from IHS

23.12 SPEED RATINGS BY FIELD CONTROL FOR 500- OR 700-VOLT DIRECT-CURRENT MOTORS

Speed ratings by field control shall be permitted to vary between the base speed and the speeds listed in Tables 23-5, 23-6, and 23-7. (See MG 1-23.10 for the voltage ratings for the horsepower ratings listed.)

Table 23-5
GENERAL INDUSTRIAL MOTORS (SEE MG 1-23.01) AND METAL ROLLING MILL MOTORS, CLASS N (SEE MG 1-23.02)

	Base Speed, Rpm																				
	850	650	500	450	400	350	300	250	225	200	175	150	125	110	100	90	80	70	65	60	55	50
Hp	Speed by Field Control, Rpm—Nonreversing Service*																					
250	. . .	. . .	. . .	. . .	. . .	. . .	1140	1030	960	890	820	730	645	590	550	. . .	. . .	. . .	. . .	. . .	. . .	. . .
300	. . .	. . .	. . .	. . .	. . .	1190	1090	990	920	855	790	700	620	570	530	. . .	. . .	. . .	. . .	. . .	. . .	. . .
400	. . .	. . .	1290	1250	1200	1110	1020	920	860	800	735	655	580	540	500	. . .	. . .	. . .	. . .	. . .	. . .	. . .
500	. . .	1400	1220	1170	1110	1040	960	870	810	750	700	625	550	510	480	450	. . .	. . .	. . .	. . .	. . .	. . .
600	. . .	1330	1160	1120	1060	980	910	830	775	720	660	590	530	490	455	430	400	. . .	. . .	. . .	. . .	. . .
700	1370	1270	1110	1065	1010	940	870	790	740	690	640	570	510	470	440	415	385	350	. . .	. . .	. . .	. . .
800	1320	1220	1070	1020	970	900	830	760	710	660	610	550	490	450	425	400	370	340	315	300	. . .	. . .
900	1270	1170	1030	980	930	870	805	730	690	640	590	530	475	440	410	385	360	330	305	285	260	. . .
1000	1220	1130	990	950	900	840	780	710	660	620	570	515	460	425	400	375	350	320	295	275	255	240
1250	1115	1030	920	870	830	770	720	660	620	575	530	480	430	400	385	350	330	300	280	260	240	225
1500	1030	960	850	810	770	720	670	610	580	540	500	450	410	380	355	330	310	285	265	250	230	215
1750	960	900	800	760	720	670	630	575	540	510	475	430	385	360	340	315	300	270	250	235	220	205
2000	. . .	840	750	720	675	630	590	540	515	485	450	410	370	340	320	300	285	260	240	225	210	200
2250	. . .	795	710	680	640	600	560	515	490	460	430	390	350	330	310	290	275	250	230	220	205	195
2500	. . .	750	675	650	600	570	535	490	470	440	410	370	340	315	300	280	260	240	225	210	200	190
3000	. . .	. . .	610	585	540	510	490	450	430	405	380	340	315	295	280	260	245	225	210	200	190	180
3500	. . .	. . .	. . .	530	490	470	445	410	395	380	350	320	295	275	260	245	230	210	200	190	180	170
4000	. . .	. . .	. . .	. . .	450	430	410	380	365	350	330	300	275	260	250	235	220	200	190	180	170	160
4500	. . .	. . .	. . .	. . .	. . .	390	380	355	340	330	310	285	260	245	235	220	205	190	180	170	165	155
5000	. . .	. . .	. . .	. . .	. . .	. . .	350	330	320	310	290	270	250	235	225	210	195	180	170	165	160	150
6000	. . .	. . .	. . .	. . .	. . .	. . .	. . .	. . .	. . .	. . .	260	240	225	210	205	190	180	165	155	150	145	140
7000	. . .	. . .	. . .	. . .	. . .	. . .	. . .	. . .	. . .	. . .	. . .	220	205	195	190	175	165	155	145	140	135	130
8000	. . .	. . .	. . .	. . .	. . .	. . .	. . .	. . .	. . .	. . .	. . .	. . .	190	180	170	160	150	140	135	130	128	125

*Speed ratings by field control of motors designed for reversing service (operation with either direction of rotation) shall be permitted to vary between the base speed and a speed equal to 90 percent of the value listed in the table

NOTE—The speeds indicated in Table 23-5 take into consideration both electrical and mechanical limitations. Operation at speeds above those indicated by increasing the armature voltage is not recommended.

Not for Resale

Copyright National Electrical Manufacturers Association
Provided by IHS under license with NEMA
No reproduction or networking permitted without license from IHS
Not for Resale

Table 23-6
METAL ROLLING MILL MOTORS, CLASS S (SEE MG 1-23.02)

	Base Speed, Rpm																				
	850	650	500	450	400	350	300	250	225	200	175	150	125	110	100	90	80	70	65	60	55	50
Hp	Speed by Field Control, Rpm—Nonreversing Service*																					
250	. . .	. . .	. . .	. . .	. . .	. . .	1340	1200	1130	1050	965	860	760	700	650	. . .	. . .	. . .	. . .	. . .	. . .	. . .
300	. . .	. . .	. . .	. . .	. . .	1390	1280	1160	1085	1010	930	825	730	675	625	. . .	. . .	. . .	. . .	. . .	. . .	. . .
400	. . .	. . .	1480	1440	1390	1290	1200	1075	1010	940	860	775	680	635	590	. . .	. . .	. . .	. . .	. . .	. . .	. . .
500	. . .	1590	1400	1350	1310	1210	1120	1020	950	880	820	735	650	600	565	525	. . .	. . .	. . .	. . .	. . .	. . .
600	. . .	1500	1320	1280	1220	1130	1060	965	905	840	775	695	620	575	535	505	470	. . .	. . .	. . .	. . .	. . .
700	1510	1420	1260	1210	1160	1085	1010	915	860	805	740	670	600	550	515	490	455	410	. . .	. . .	. . .	. . .
800	1460	1330	1215	1160	1110	1030	960	880	825	770	710	645	575	530	500	470	435	400	370	350	. . .	. . .
900	1400	1310	1165	1110	1060	1000	930	850	800	745	685	620	555	515	480	450	420	390	360	335	310	. . .
1000	1330	1260	1120	1080	1025	960	900	820	765	720	660	600	540	500	470	435	400	375	350	325	300	275
1250	1210	1140	1040	1020	1000	875	825	765	715	670	615	560	500	470	450	410	385	350	325	300	285	265
1500	1100	1050	950	920	870	820	765	700	670	625	580	525	475	440	415	385	365	335	310	295	270	255
1750	1030	980	885	850	810	755	720	660	620	585	550	500	445	415	395	365	350	315	295	275	260	240
2000	. . .	910	830	800	755	720	670	625	590	555	520	475	430	395	370	350	330	300	285	265	245	235
2250	. . .	855	785	750	715	670	635	585	560	525	490	450	405	380	360	335	320	290	270	255	240	230
2500	. . .	800	740	710	665	635	600	550	530	500	465	425	390	365	345	325	300	280	260	245	235	220
3000	. . .	. . .	660	635	590	565	540	510	485	460	430	390	360	340	325	300	280	260	245	230	220	210
3500	. . .	. . .	. . .	570	530	515	490	460	445	430	395	365	335	315	300	285	265	240	230	220	210	200
4000	. . .	. . .	. . .	. . .	480	465	450	420	405	395	370	335	310	295	285	270	250	230	220	210	195	185
4500	. . .	. . .	. . .	. . .	. . .	420	410	390	375	355	340	320	295	280	270	250	235	220	205	195	190	180
5000	. . .	. . .	. . .	. . .	. . .	. . .	370	360	350	340	320	300	280	265	255	240	225	210	195	190	185	175
6000	. . .	. . .	. . .	. . .	. . .	. . .	. . .	. . .	. . .	. . .	285	265	250	240	230	215	205	190	180	170	165	160
7000	. . .	. . .	. . .	. . .	. . .	. . .	. . .	. . .	. . .	. . .	. . .	240	230	220	215	195	185	175	165	160	155	150
8000	. . .	. . .	. . .	. . .	. . .	. . .	. . .	. . .	. . .	. . .	. . .	. . .	210	200	190	180	170	160	155	150	145	140

*Speed ratings by field control of motors designed for reversing service (operation with either direction of rotation) shall be permitted to vary between the base speed and a speed equal to 90 percent of the value listed in the table.

Table 23-7
REVERSING HOT MILL MOTORS (SEE MG 1-23.03)

Base Speed, Rpm																
200	175	150	125	110	100	90	80	70	65	60	55	50	45	40	35	30
Speed by Field Control, Rpm																
400	350	300	250	220	200	180	160	140	130	120	110	100	90	80	70	60

NOTE—The speeds indicated in Tables 23-6 and 23-7 take into consideration both electrical and mechanical limitations. Operation at speeds above those indicated by increasing the armature voltage is not recommended.

Copyright National Electrical Manufacturers Association
Provided by IHS under license with NEMA
No reproduction or networking permitted without license from IHS

TESTS AND PERFORMANCE

23.40 TEMPERATURE RISE

The observable temperature rise under rated-load conditions of each of the various parts of the motor, above the temperature of the cooling air, shall not exceed the values given in the following table. The temperature of the cooling air[1] is the temperature of the external air as it enters the ventilating openings of the machine, and the temperature rises given in the table are based on a maximum temperature of 40°C for this external air. Temperatures shall be determined in accordance with IEEE Std 113, *Guide on Test Procedures for DC Machines.*[2]

OBSERVABLE TEMPERATURE RISES, DEGREES C*

Item	Machine Part	Method of Temperature Determination†	General Industrial Service								Metal Rolling Mill Service								
			Semi-enclosed				Totally-enclosed				Metal Rolling Mills, Excluding Reversing Hot Mills						Reversing Hot Mills		
											Forced-ventilated or Totally-enclosed Water-air-cooled						Forced-ventilated or Totally-enclosed Water-air-cooled		
			Continuous Rated 100% Load				Continuous Rated 100% Load				Continuous Rated 100% Load			2 Hours‡ 125% Load			Continuous Rated 100% Load		
			Insulation Class				Insulation Class				Insulation Class			Insulation Class			Insulation Class		
			A	B	F	H	A	B	F	H	B	F	H	B	F	H	B	F	H
1	Armature windings and all other windings other than those given in items 2 and 3	Thermometer	50	70	90	110	55	75	95	115	40	60	75	55	75	95	50	70	90
		Resistance	70	100	130	155	70	100	130	155	60	90	110	80	110	135	70	100	130
2	Multilayer field windings	Resistance	70	100	130	155	70	100	130	155	70	100	120	80	110	135	70	100	130
3	Single-layer field windings with exposed uninsulated surfaces and bare copper windings	Thermometer	60	80	105	130	65	85	110	135	50	70	90	65	85	110	60	80	105
		Resistance	70	100	130	155	70	100	130	155	60	90	110	80	110	135	70	100	130
4	Commutator and collector rings	Thermometer	65	85	105	125	65	85	105	125	55	75	90	65	85	105	65	85	105
5	The temperatures attained by cores, commutators, and miscellaneous parts (such as brushholders, brushes, pole tips, etc.) shall not injure the insulation or the machine in any respect.																		

*For motors which operate under prevailing barometric pressure and which are designed not to exceed the specified temperature rise at altitudes from 3300 feet (1000 meters) to 13000 feet (4000 meters), the temperature rises, as checked by tests at low altitudes, shall be less than those listed in the foregoing table by 1 percent of the specified temperature rise for each 330 feet (100 meters) of altitude in excess of 3300 feet (1000 meters).

†Where two methods of temperature measurement are listed, a temperature rise within the values listed in the table measured by either method demonstrates conformity with the standard.

‡Temperature limits apply at end of 2-hour operation at 125-percent load following operation at rated load long enough to reach a stable temperature.

NOTE I—See MG 1-1.65 for description of classes of insulation.

NOTE II—Abnormal deterioration of insulation may be expected if the ambient temperature of 40°C is exceeded in regular operation.

[1]For totally-enclosed water-air-cooled machines, the temperature of the cooling air is the temperature of the air leaving the coolers. Totally-enclosed water-air-cooled machines are normally designed for the maximum cooling water temperature encountered at the location where each machine is to be installed. With a cooling water temperature not exceeding that for which the machine is designed:

a. On machines designed for cooling water temperatures up to 30°C—the temperature of the air leaving the coolers shall not exceed 40°C.

b. On machines designed for higher cooling water temperatures—the temperature of the air leaving the coolers shall be permitted to exceed 40°C provided the temperature rises of the machine parts are then limited to values less than those given in the table by the number of degrees that that temperature of the air leaving the coolers exceeds 40°C

[2]See Referenced Standards, MG 1-1.01.

Not for Resale

23.41 OVERLOAD CAPABILITY

23.41.1 General Industrial Motors

These motors shall be capable of carrying, with successful commutation, the following momentary (1 minute) loads.

	Percent of Rated Horsepower Load	
Percent of Base Speed*	Occasionally Applied**	Frequently Applied**
100	150	140
200	150	130
300 or over	140	125

*At intermediate speeds the variation in momentary load capability is linear with respect to speed.
**See 23.42.

These motors have no continuous overload capability.

23.41.2 Metal Rolling Mill Motors (Excluding Reversing Hot Mill Motors)—Open, Forced-Ventilated, and Totally Enclosed Water-Air-Cooled

These motors shall be capable of carrying, with successful commutation, the following loads.

a. 115 percent of rated-horsepower load continuously at rated voltage throughout the rated-speed range. Under this load, the temperature rises will be higher and other characteristics may differ from those specified for operation under rated conditions
b. 125 percent of rated-horsepower load for 2 hours at rated voltage throughout the rated-speed range, following continuous operation at rated load, without exceeding the temperature rises specified in 23.40 for this operating condition. Other characteristics may differ from those specified for operation under rated conditions
c. The following momentary (1 minute) loads:

	Percent of Rated-Horsepower Load	
Percent of Base Speed*	Occasionally Applied**	Frequently Applied**
100	200	175
200	200	160
300 or over	175	140

*At intermediate speeds the variation in momentary load capability is linear with respect to speed.
**See 23.42.

23.41.3 Reversing Hot Mill Motors—Forced-Ventilated and Totally Enclosed Water-Air-Cooled

These motors shall be capable of carrying, with successful commutation, the following momentary (1-minute) loads.

	Occasionally Applied Load*		Frequently Applied Load*	
Percent of Base Speed	Percent of Rated Base Speed Torque	Percent of Rated Horsepower	Percent of Rated Base Speed Torque	Percent of Rated Horsepower
93**	275	256	...	...
95**	...	...	225	214
125	199	248.5	166	207.5
150	162	242.5	135	202
175	135	236.5	112	196.5
200	115	230	95.5	191
225	99.5	224	82.5	185.5
250	87.5	218	72	180
275	77	212	63.5	174.5
300	68.5	206	56.3	169

*See 23.42.
**Approximate speed attained at load shown with motor field adjusted for 100-percent base speed at 100-percent load.

These motors have no continuous overload capability.

23.42 MOMENTARY LOAD CAPACITY

Occasionally applied momentary load capacity denotes the ability of a motor to carry loads in excess of its continuous rating for a period not to exceed 1 minute on an infrequent or emergency basis. It is recommended that the circuit breaker instantaneous-trip setting correspond to the occasionally applied momentary load capacity.

Frequently applied momentary load capacity denotes the ability of the motor to carry loads in excess of its rating on a repetitive basis, such as a part of a regular duty cycle.

Operation at the momentary load capacity should be followed by light load operation such that the rms load value of the complete load cycle does not exceed the continuous motor rating. Also, the time of operation at momentary load capacity must be limited to a period such that the rated temperature rise is not exceeded to ensure that the insulation life is not reduced.

23.43 SUCCESSFUL COMMUTATION

Successful commutation is attained if neither the brushes nor the commutator are burned or injured in the conformance test or in normal service to the extent that abnormal maintenance is required. The presence of some visible sparking is not necessarily evidence of unsuccessful commutation.

Copyright National Electrical Manufacturers Association
Provided by IHS under license with NEMA
No reproduction or networking permitted without license from IHS

Not for Resale

23.44 EFFICIENCY

Efficiency and losses shall be determined in accordance with IEEE Std 113. The efficiency shall be determined at rated output, voltage, and speed. In the case of adjustable-speed motors, the base speed shall be used unless otherwise specified.

The following losses shall be included in determining the efficiency.

a. I^2R loss of armature
b. I^2R loss of series windings
c. I^2R loss of shunt field
d. Core loss
e. Stray load loss
f. Brush contact loss
g. Brush friction loss
h. Exciter loss if exciter is supplied with and driven from the shaft of the machine
i. Ventilating loss
j. Friction and windage loss[1]

In determining I^2R losses, the resistance of each winding shall be corrected to a temperature equal to an ambient temperature of 25°C plus the observed rated-load temperature rise measured by resistance. Where the rated-load temperature rise has not been measured, the resistance of the winding shall be corrected to the following temperature:

Class of Insulation System*	Temperature, Degrees C
A	85
B	110
F	135
H	155

*Where the rated temperature rise is that of a lower class of insulation system (e.g., motors for metal rolling mill service), the temperature used for resistance correction shall be that of the lower insulation class.

23.45 TYPICAL REVERSAL TIME OF REVERSING HOT MILL MOTORS

The maximum time typically required for reversing hot mill motors to reverse their direction of rotation, when operating at no load and with suitable control and power supply, is given in the following table.

Motor Speed (Forward and Reverse), Percent of Base Speed	Reversal Time, Seconds
Horsepower × base speed (rpm) not over 250,000 and speed ratio not over 2:1	
100	1.5
150	2.5
200	4
Horsepower × base speed (rpm) over 250,000 or speed ratio over 2:1	
100	2
150	3
200	5
240	7
300	12

23.46 IMPACT SPEED DROP OF A DIRECT-CURRENT MOTOR

The impact speed drop of a direct-current motor is defined as the initial transient speed drop (from the time of impact to the first point of zero slope on the transient speed-time curve), expressed as a percentage of the speed prior to the speed change, when full load is suddenly applied under conditions of fixed line and shunt field excitation voltages while the motor is operating at no-load and rated voltage with shunt field excitation required to produce rated base speed at rated load and rated voltage.

NOTE—In actual operation, the resultant speed drop of the motor is affected by the stability of the applied voltage, the added inertia of the connected load and the operation of any control equipment.

23.47 OVERSPEED

Direct-current motors shall be so constructed that, in an emergency not to exceed 2 minutes, they will withstand an overspeed of 25 percent above rated full-load speed without mechanical injury.

23.48 VARIATION FROM RATED VOLTAGE

23.48.1 Steady State

Direct-current motors covered by this Part 23 shall operate successfully at rated load up to and including 110 percent of rated direct-current armature or field voltage, or both, provided the maximum speed is not exceeded.

Performance within this voltage variation will not necessarily be in accordance with the standards established for operation at rated voltage. For operation below base speed at reduced armature voltage, see 23.82.

[1] In the case of motors furnished with thrust bearings, only that portion of the thrust bearing loss produced by the motor itself shall be included in the efficiency calculation. Alternatively, a calculated value of efficiency, including bearing loss due to external thrust load, shall be permitted to be specified.
In the case of motors furnished with less than a full set of bearings, friction and windage losses which are representative of the actual installation shall be determined by (1) calculation or (2) experience with shop test bearings and shall be included in the efficiency calculations.

Copyright National Electrical Manufacturers Association
Provided by IHS under license with NEMA
No reproduction or networking permitted without license from IHS
Not for Resale

23.48.2 Transient Voltages of Microsecond Duration

Direct-current motors shall withstand transient peak voltages of 160 percent of rated voltage for repetitive transients and 200 percent of rated voltage for random transients.

23.49 FIELD DATA FOR DIRECT-CURRENT MOTORS

The following data for direct-current motors may be required by the control manufacturer.

a. Manufacturer's name
b. Requisition or order number
c. Frame designation
d. Serial number
e. Horsepower output
f. Shunt or compound-wound
g. Rated speed in rpm
h. Rated voltage
i. Rated current
j. Excitation voltage
k. Resistance of shunt field at 25°C
l. Field amperes to obtain:

100% speed at full load . . . . . _____
____ speed at full load . . . . . _____
200% speed at full load . . . . . _____
____ speed at full load . . . . . _____
300% speed at full load . . . . . _____
400% speed at full load . . . . . _____
____ speed at full load . . . . . _____

NOTE—The above table is to be followed only up to the speed that agrees with the maximum speed rating of the motor.

Indicate if values given are calculated or taken from tests.

23.50 ROUTINE TESTS

The following tests shall be performed in accordance with IEEE Std 113.

a. Measurement of resistance of all windings
b. Potential drop and polarity of field coils
c. Brush setting
d. Commutation adjustment
e. Speed-limit-switch adjustment
f. Air gap measurement
g. High-potential test in accordance with 23.51

23.51 HIGH-POTENTIAL TEST

23.51.1 Safety Precautions and Test Procedure

See 3.01.

23.51.2 Test Voltage

The test voltage shall be an alternating voltage whose effective value is 1000 volts plus twice the rated voltage of the machine.

23.52 MECHANICAL VIBRATION ▲

See MG 1, Part 7.

23.53 METHOD OF MEASURING THE MOTOR VIBRATION ▲

See 7.07, except that series motors shall be checked at rated operating speed only.

23.54 CONDITIONS OF TEST FOR SPEED REGULATION

For conditions of test for speed regulation, see IEEE Std 113.

Copyright National Electrical Manufacturers Association
Provided by IHS under license with NEMA
No reproduction or networking permitted without license from IHS

Not for Resale

MANUFACTURING

23.60 NAMEPLATE MARKING ▲

The following information shall be given on all nameplates. For abbreviations, see 1.80.

a. Manufacturer's type and frame designation
b. Horsepower output
c. Time rating
d. Temperature rise[1]
e. Rpm at rated load
f. Voltage
g. Amperes at rated load
h. Winding—shunt, compound, or series

Some examples of additional information that may be included on the nameplate are:

i. Enclosure or IP code
j. Manufacturer's name, mark, or logo
k. Manufacturer's plant location
l. Serial number or date of manufacture

APPLICATION DATA

23.80 SERVICE CONDITIONS

23.80.1 General

Motors should be properly selected with respect to their service conditions, usual or unusual, both of which involve the environmental conditions to which the machine is subjected and the operating conditions. Machines conforming to this Part 23 are designed for operation in accordance with their ratings under usual service conditions. Some machines may also be capable of operating in accordance with their ratings under one or more unusual service conditions. Definite-purpose or special-purpose machines may be required for some unusual conditions.

Service conditions, other than those specified as usual, may involve some degree of hazard. The additional hazard depends upon the degree of departure from usual operating conditions and the severity of the environment to which the machine is exposed. The additional hazard results from such things as overheating, mechanical failure, abnormal deterioration of the insulation system, corrosion, fire, and explosion.

Although experience of the user may often be the best guide, the manufacturer of the driven equipment and the motor manufacturer should be consulted for further information regarding any unusual service conditions which increase the mechanical or thermal duty on the machine and, as a result, increase the chances for failure and consequent hazard. This further information should be considered by the user, his consultants, or others most familiar with the details of the application involved when making the final decision.

23.80.2 Usual Service Conditions

Usual service conditions include the following:

a. An ambient temperature in the range of 0°C to 40°C or, when water cooling is used, in the range of 5°C to 40°C.
b. An altitude not exceeding 3300 feet (1000 meters)
c. A location or supplementary enclosures, if any, such that there is no serious interference with the ventilation of the motor

23.80.3 Unusual Service Conditions

The manufacturer should be consulted if any unusual service conditions exist which may affect the construction or operation of the motor. Among such conditions are:

a. Exposure to:
   1. Combustible, explosive, abrasive, or conducting dusts
   2. Lint or very dirty operating conditions where the accumulation of dirt will interfere with normal ventilation
   3. Chemical fumes, flammable or explosive gases
   4. Nuclear radiation
   5. Steam, salt-laden air, or oil vapor
   6. Damp or very dry locations, radiant heat, vermin infestation, or atmospheres conducive to the growth of fungus
   7. Abnormal shock, vibration, or mechanical loading from external sources
   8. Abnormal axial or side thrust imposed on the motor shaft
b. Operation where:
   1. There is excessive departure from rated voltage (see 23.48)
   2. Low noise levels are required
c. Operation at:

---

[1] As an alternative marking, this item shall be permitted to be replaced by the following.
a. Maximum ambient temperature for which the machine is designed.
b. Insulation system designation (if field and armature use different classes of insulation systems, both insulation systems shall be given, that for the field being given first).

Copyright National Electrical Manufacturers Association
Provided by IHS under license with NEMA
No reproduction or networking permitted without license from IHS
Not for Resale

NEMA MG*1 93 ■ 6470247 0506819 7T8 ■

1. Speeds above highest rated speed
2. Standstill with any winding continuously energized

d. Operation in a poorly ventilated room, in a pit, or in an inclined position

e. Operation where subjected to:
   1. Torsional impact loads
   2. Repetitive abnormal overloads

23.81 OPERATION OF DIRECT-CURRENT MOTORS ON RECTIFIED ALTERNATING CURRENT

23.81.1 When a direct-current motor is operated from a rectified alternating-current supply, its performance may differ materially from that of the same motor when operated from a direct-current source of supply having the same effective value of voltage. At the same load, its temperature rise, speed regulation, and noise level may be increased, and successful commutation may not be achieved. The degree of difference will depend upon the effect of the rectified voltage on the motor current and is more likely to be significant when the rectifier pulse number is less than 6 or when the rectifier current is phase controlled to produce an output voltage of 85 percent or less of the maximum possible rectified output voltage.

23.81.2 If the power supply for a direct-current motor has a continuous pulsation or ripple in its output voltage, a similar ripple will appear in the motor armature current. The performance standards for direct-current motors in this Part 23 are based upon operation from a direct-current source of supply, such as a generator or battery, and do not necessarily apply if the magnitude of the ripple current (peak-to-peak), expressed in percent of rated-load current, exceeds six percent at rated load, rated armature voltage, and rated base speed.

The inductance of the motor armature winding is a major component of the impedance limiting the flow of ripple current. The approximate inductance in henries can be calculated from the formula:

$$L_a = \frac{19.1 \times V_o}{P \times N_1 \times I_a} \times C_x$$

Where:

L_a = Armature circuit inductance in henries
V_o = Rated motor voltage in volts
P = Number of poles
N_1 = Base speed in rpm
I_a = Rated motor current in amperes
C_x = Per unit value of armature circuit reactance at base speed frequency. (Typically, the armature circuit reactance, at base speed frequency, has a per unit value which will equal or exceed 0.1 for motors having compensating windings and 0.4 for motors without compensating windings.)

Since the value of C_x varies with machine construction, the armature circuit inductance calculated by this formula is an approximation.

The manufacturer should be contacted if a more accurate value of the saturated inductance is required. Besides the armature circuit inductance, the current ripple calculation may include the effects of cable inductance, series inductor(s) (either integral with, or separate from, the power supply), and the inductance of the supply transformer.

23.81.3 When a direct-current motor is operated from some unfiltered rectifier power supplies, bearing currents may result. Ripple currents, transmitted by capacitive coupling between the rotor winding and core, may flow to ground. While these currents are small in magnitude, they may cause damage to either antifriction or sleeve bearings under certain circumstances. It is recommended that manufacturers be consulted to determine whether bearing currents may be a problem and, if so, what measures can be taken to minimize them.

23.82 OPERATION OF DIRECT-CURRENT MOTORS BELOW BASE SPEED BY REDUCED ARMATURE VOLTAGE

When a direct-current motor is operated below base speed by reduced armature voltage, it may be necessary to reduce its torque load below rated full-load torque to avoid overheating of the motor.

23.83 RATE OF CHANGE OF LOAD CURRENT

Direct-current motors can be expected to operate successfully with repetitive changes in load current such as those which occur during a regular duty cycle provided that, for each change in current, the factor K, as defined in the following formula, does not exceed 15.

In the formula, the equivalent time for the current change to occur is the time which would be required for the change if the current increased or decreased at a uniform rate equal to the maximum rate at which it actually increases or decreases (neglecting any high-frequency ripple).

$$K = \frac{(\text{Change in current / rated-load current})^2}{\text{Equivalent time in seconds for current change to occur}}$$

Copyright National Electrical Manufacturers Association
Provided by IHS under license with NEMA
No reproduction or networking permitted without license from IHS
Not for Resale

NEMA MG*1 93 6470247 0506162 5T2

Section III
LARGE MACHINES
Part 24
LARGE MACHINES—DC GENERATORS LARGER THAN 1.0 KILOWATT PER RPM, OPEN TYPE CLASSIFICATION

24.0 SCOPE

The standards in this Part 24 of Section III cover direct-current generators built in frames larger than that having a continuous dripproof rating, or equivalent capacity, of 1.0 kilowatt per rpm, open type.

24.01 GENERAL INDUSTRIAL GENERATORS

These generators are designed for all general industrial service (excepting metal rolling mill service).

24.02 METAL ROLLING MILL GENERATORS

These generators are designed particularly for metal rolling mill service (except for reversing hot mill service, see 24.03). These generators differ in design from general industrial generators because of the requirements for this service which are as follows.

a. Continuous overload capability (see 24.41).
b. High momentary overload (see 24.41).

24.03 REVERSING HOT MILL GENERATORS

These generators are designed particularly for application to reversing hot mills, such as blooming and slabbing mills. They are characterized by:

a. No continuous overload capability
b. Higher momentary overload capacity (see 24.41)

RATINGS

24.09 BASIS OF RATING

Direct-current generators covered by this Part 24 shall be rated on a continuous-duty basis unless otherwise specified. The rating shall be expressed in kilowatts available at the terminals at rated speed and voltage.

24.10 KILOWATT, SPEED, AND VOLTAGE RATINGS

Kilowatt, speed, and voltage ratings shall be as shown in Table 24-1.

Copyright National Electrical Manufacturers Association
Provided by IHS under license with NEMA
No reproduction or networking permitted without license from IHS

Not for Resale

Table 24-1
KILOWATT, SPEED, AND VOLTAGE RATINGS FOR DC GENERATORS LARGER THAN 1.0 KILOWATT PER RPM, OPEN TYPE

kW Ratings	Speed, Rpm													
	900	720	600	514	450	400	360	327	300	277	257	240	225	200
125	For smaller ratings, see 15.10					...	...	...	...	...	...	...	...	...
170				...	...	...	...	...	...	...	...	...	...	...
200	...	...	...	...	...	...	...	...	...	...	...	...	...	...
240	...	...	...	...	...	...	...	...	...	...	...	...	A	A
320	...	...	...	...	...	...	...	...	A	A	A	A	A	A
400	...	...	...	...	...	...	A	A	A	A	A	A	A	A
480	...	...	...	...	A	A	A	A	A	A	A	A	A	A
560	...	...	...	A	A	A	A	A	A	A	A	A	A	A
640	...	...	B	B	B	B	B	B	B	B	B	B	B	B
720	...	...	B	B	B	B	B	B	B	B	B	B	B	B
800	...	B	B	B	B	B	B	B	B	B	B	B	B	B
1000	C	B	B	B	B	B	B	B	B	B	B	B	B	B
1200	C	B	B	B	B	B	B	B	B	B	B	B	B	B
1400	C	C	B	B	B	B	B	B	B	B	B	B	B	B
1600	C	C	C	B	B	B	B	B	B	B	B	B	B	B
1800	...	C	C	C	B	B	B	B	B	B	B	B	B	B
2000	...	C	C	C	C	C	B	B	B	B	B	B	B	B
2400	...	...	C	C	C	C	C	C	C	C	C	C	C	C
2800	...	...	...	D	D	D	D	D	D	D	D	D	D	D
3200	...	...	...	D	D	D	D	D	D	D	D	D	D	D
3600	...	...	...	...	D	D	D	D	D	D	D	D	D	D
4000	...	...	...	...	...	D	D	D	D	D	D	D	D	D
4800	...	...	...	...	...	...	...	D	D	D	D	D	D	D
5600	...	...	...	...	...	...	...	...	...	D	D	D	D	D
6400	...	...	...	...	...	...	...	...	...	...	D	D	D	D

"A" indicates voltage rating at either 250 or 500 volts.
"B" indicates voltage ratings at either 250, 500, or 700 volts.
"C" indicates voltage rating at either 500 or 700 volts.
"D" indicates voltage rating at 700 volts only.

TESTS AND PERFORMANCE

24.40 TEMPERATURE RISE

The observable temperature rise under rated-load conditions of each of the various parts of the generator, above the temperature of the cooling air, shall not exceed the values given in the following table. The temperature of the cooling air[1] is the temperature of the external air as it enters the ventilating openings of the machine, and the temperature rises given in the table are based on a maximum temperature of 40°C for this external air. Temperatures shall be determined in accordance with IEEE Std 113.

[1]For totally enclosed water-air-cooled machines, the temperature of the cooling air is the temperature of the air leaving the coolers. Totally enclosed water-air-cooled machines are normally designed for the maximum cooling water temperature encountered at the location where each machine is to be installed. With a cooling water temperature not exceeding that for which the machine is designed:
a. On machines designed for cooling water temperatures from 5°C to 30°C—the temperature of the air leaving the coolers shall not exceed 40°C.
b. On machines designed for higher cooling water temperatures—the temperature of the air leaving the coolers shall be permitted to exceed 40°C provided the temperature rises of the machine parts are then limited to values less than those given in the table by the number of degrees that temperature of the air leaving the coolers exceeds 40°C.

Copyright National Electrical Manufacturers Association
Provided by IHS under license with NEMA
No reproduction or networking permitted without license from IHS
Not for Resale

			Observable Temperature Rises, Degrees C*																
			General Industrial Service								Metal Rolling Mill Service								
											Metal Rolling Mills, Excluding Reversing Hot Mills						Reversing Hot Mills		
											Forced-ventilated or Totally-enclosed Water-air-cooled						Forced-ventilated or Totally-enclosed Water-air-cooled		
			Semi-enclosed				Totally-enclosed				Continuous Rated 100% Load			2 Hours‡ 125% Load			Continuous Rated 100% Load		
			Continuous Rated 100% Load				Continuous Rated 100% Load												
			Insulation Class				Insulation Class				Insulation Class			Insulation Class			Insulation Class		
Item	Machine Part	Method of Temperature Determination†	A	B	F	H	A	B	F	H	B	F	H	B	F	H	B	F	H
1	Armature windings and all other windings other than those given in items 2 and 3	Thermometer	50	70	90	110	55	75	95	115	40	60	75	55	75	95	50	70	90
		Resistance	70	100	130	155	70	100	130	155	60	90	110	80	110	135	70	100	130
2	Multilayer field windings	Resistance	70	100	130	155	70	100	130	155	60	90	110	80	110	135	70	100	130
3	Single-layer field windings with exposed uninsulated surfaces and bare copper windings	Thermometer	60	80	105	130	65	85	110	135	50	70	90	65	85	110	60	80	105
		Resistance	70	100	130	155	70	100	130	155	60	90	110	80	110	135	70	100	130
4	Commutator and collector rings	Thermometer	65	85	105	125	65	85	105	125	55	75	90	65	85	105	65	85	105
5	The temperatures attained by cores, commutators, and miscellaneous parts (such as brushholders, brushes, pole tips, etc.) shall not injure the insulation or the machine in any respect.																		

*For generators which operate under prevailing barometric pressure and which are designed not to exceed the specified temperature rise at altitudes from 3300 feet (1000 meters) to 13000 feet (4000 meters), the temperature rises, as checked by tests at low altitudes, shall be less than those listed in the foregoing table by 1 percent of the specified temperature rise for each 330 feet (100 meters) of altitude in excess of 3300 feet (1000 meters).

†Where two methods of temperature measurement are listed, a temperature rise within the values listed in the table, measured by either method, demonstrates conformity with the standard

‡Temperature limits apply at end of 2-hour operation at 125-percent load following operation at rated load long enough to reach a stable temperature.

NOTE I—See **1.66 for description of classes of insulation.**

NOTE II—Abnormal deterioration of insulation may be expected if the ambient temperature of 40°C is exceeded in regular operation.

Copyright National Electrical Manufacturers Association
Provided by IHS under license with NEMA
No reproduction or networking permitted without license from IHS

Not for Resale

24.41 OVERLOAD CAPABILITY

24.41.1 General Industrial Generators

These generators shall be capable of carrying, with successful commutation, a load of 150 percent of rated-load amperes for 1 minute with the rheostat set for rated load excitation and with no temperature rise specified. These generators have no continuous overload capability.

24.41.2 Metal Rolling Mill Generators (Excluding Reversing Hot Mill Generators)—Open, Forced-Ventilated, and Totally Enclosed Water-Air-Cooled

These generators shall be capable of carrying, with successful commutation, the following loads.

a. 115 percent of rated current continuously, when operating at rated speed and rated or less than rated voltage, with no temperature rise specified.
b. 125 percent of rated current for 2 hours, at rated speed and rated or less than rated voltage, following continuous operation at rated load without exceeding the temperature rises specified in 24.40 for this operating condition.
c. 200 percent of rated-load amperes for 1 minute with the rheostat set for rated load or lower excitation and with no temperature rise specified.

24.41.3 Reversing Hot Mill Generators—Forced-Ventilated and Totally Enclosed Water-Air-Cooled

These generators shall be capable of carrying, with successful commutation, a load of 275 percent of rated-load amperes for 1 minute with the rheostat set for rated-load excitation and with no temperature rise specified. These generators have no continuous overload capability.

24.41A Momentary Load Capacity

Occasionally-applied monetary load capacity denotes the ability of a generator to carry loads in excess of its continuous rating for a period not to exceed 1 minute on an infrequent basis. It is recommended that the circuit breaker instantaneous-trip setting correspond to the occasionally-applied momentary load capacity.

Frequently-applied momentary load capacity denotes the ability of a generator to carry loads in excess of its rating on a repetitive basis, such as a part of a regular duty cycle.

Operation at the momentary load capacity should be followed by light load operation such that the rms load value of the complete load cycle does not exceed the continuous generator rating. Also, the time of operation at momentary load capacity must be limited to a period such that the rated temperature rise is not exceeded to ensure that the insulation life is not reduced.

24.42 SUCCESSFUL COMMUTATION

Successful commutation is attained if neither the brushes nor the commutator are burned or injured in the conformance test or in normal service to the extent that abnormal maintenance is required. The presence of some visible sparking is not necessarily evidence of unsuccessful commutation.

24.43 OUTPUT AT REDUCED VOLTAGE

When operated at less than rated voltage, generators shall carry load currents equal to those corresponding to their kilowatt and voltage ratings.

24.44 EFFICIENCY

Efficiency and losses shall be determined in accordance with IEEE Std 113; efficiency shall be determined at rated output, voltage, and speed.

The following losses shall be included in determining the efficiency.

a. I^2R loss of armature
b. I^2R loss of series windings
c. I^2R loss of shunt field
d. Core loss
e. Stray load loss
f. Brush contact loss
g. Brush friction loss
h. Exciter loss if exciter is supplied with and driven from the shaft of the machine
i. Friction and windage loss[1]

In determining I^2R losses, the resistance of each winding shall be corrected to a temperature equal to an ambient temperature of 25°C plus the observed rated-load temperature rise measured by resistance. Where the rated-load temperature rise has not been measured, the resistance of the winding shall be corrected to the following temperature.

[1] In the case of generators furnished with thrust bearings, only that portion of the thrust bearing loss produced by the machine itself shall be included in the efficiency calculation. Alternatively, a calculated value of efficiency, including bearing loss due to external thrust load, shall be specified. In the case of generators furnished with less than a full set of bearings, friction and windage losses which are representative of the actual installation shall be determined by (1) calculation or (2) experience with shop test bearings and shall be included in the efficiency calculations.

Copyright National Electrical Manufacturers Association
Provided by IHS under license with NEMA
No reproduction or networking permitted without license from IHS
Not for Resale

Class of Insulation System*	Temperature, Degrees C
A	85
B	110
F	135
H	155

*Where the rated temperature rise is that of a lower class of insulation system (e.g., generators for metal rolling mill service), the temperature used for resistance correction shall be that of the lower insulation class.

24.45 OVERSPEED

Direct-current generators shall be so constructed that, in an emergency not to exceed 2 minutes, they will withstand an overspeed of 25 percent without mechanical injury.

24.46 FIELD DATA FOR DIRECT-CURRENT GENERATORS

The following field data for direct-current generators may be required by control manufacturers.

a. Manufacturer's name
b. Requisition or order number
c. Frame designation
d. Serial number
e. kW output
f. Shunt or compound-wound
g. Rated speed in rpm
h. Rated voltage
i. Rated current
j. Excitation voltage, or self-excited
k. Resistance of shunt field at 25°C
l. Recommended value of resistance for rheostat for hand or regulator control
m. N.L. saturation

	Percent Rated Armature Voltage	Field Current Amperes
Max. field rheostat out		
	100	
	50	
Shunt field current at rated voltage and load		

24.47 ROUTINE TESTS

a. Field current at no load, rated voltage, and rated speed
b. Field current at rated load, rated voltage, and rated speed (commutation to be observed)
c. Voltage regulation curve
d. High-potential tests in accordance with 24.48

All tests shall be made in accordance with IEEE Std 113.

24.48 HIGH POTENTIAL TESTS

24.48.1 Safety Precautions and Test Procedure

See 3.01.

24.48.2 Test Voltage

The test voltage shall be an alternating voltage whose effective value is 1000 volts plus twice the rated voltage of the machine.

24.49 CONDITIONS OF TESTS FOR VOLTAGE REGULATION

For conditions of tests for voltage regulation, see IEEE Std 113.

24.50 MECHANICAL VIBRATION ▲

See MG 1, Part 7.

Copyright National Electrical Manufacturers Association
Provided by IHS under license with NEMA
No reproduction or networking permitted without license from IHS
Not for Resale

MANUFACTURING

24.61 NAMEPLATE MARKING ▲

The following information shall be given on all nameplates. For abbreviations, see 1.80

a. Manufacturer's type and frame designation
b. Kilowatt output
c. Time rating (see 24.40)
d. Temperature rise for rated continuous load[1]
e. Overload[2]
f. Time rating of overload[2]
g. Temperature rise for overload[1,2]
h. Rated speed in rpm
i. Voltage rating[3]
j. Rated current in amperes
k. Winding—series, shunt or compound

Some examples of additional information that may be included on the nameplate are:

l. Enclosure or IP code
m. Manufacturer's name, mark, or logo
n. Manufacturer's plant location
o. Serial number or date of manufacture

APPLICATION DATA

24.80 SERVICE CONDITIONS

24.80.1 General

Generators should be properly selected with respect to their service conditions, usual or unusual, both of which involve the environmental conditions to which the machine is subjected and the operating conditions. Machines conforming to this Part 24 are designed for operation in accordance with their ratings under usual service conditions. Some machines may also be capable of operating in accordance with their ratings under one or more unusual service conditions. Definite-purpose or special-purpose machines may be required for some unusual conditions.

Service conditions other than those specified as usual, may involve some degree of hazard. The additional hazard depends upon the degree of departure from usual operating conditions and the severity of the environment to which the machine is exposed. The additional hazard results from such things as overheating, mechanical failure, abnormal deterioration of the insulation system, corrosion, fire, and explosion.

Although experience of the user may often be the best guide, the manufacturer of the driving equipment and the generator manufacturer should be consulted for further information regarding any unusual service conditions which increase the mechanical or thermal duty on the machine and, as a result, increase the chances for failure and consequent hazard. This further information should be considered by the user, his consultants, or others most familiar with the details of the application involved when making the final decision.

24.80.2 Usual Service Conditions

Usual service conditions include the following:

a. An ambient temperature not less than 10°C nor more than 40°C
b. An altitude not exceeding 3300 feet (1000 meters)
c. A location or supplementary enclosures, if any, such that there is no serious interference with the ventilation of the generator

24.80.3 Unusual Service Conditions

The manufacturer should be consulted if any unusual service conditions exist which may affect the construction or operation of the generator. Among such conditions are:

a. Exposure to:
   1. Combustible, explosive, abrasive, or conducting dusts
   2. Lint or very dirty conditions where the accumulation of dirt will interfere with normal ventilation
   3. Chemical fumes, flammable or explosive gases
   4. Nuclear radiation
   5. Steam, salt-laden air, or oil vapor
   6. Damp or very dry locations, radiant heat, vermin infestation, or atmospheres conducive to the growth of fungus
   7. Abnormal shock, vibration, or mechanical loading from external sources
   8. Abnormal axial or side thrust imposed on the generator shaft
b. Operation at:
   1. Voltages above rated voltage

---

[1] As an alternative marking, this item shall be permitted to be replaced by the following.
a. Maximum ambient temperature for which the machine is designed (see 20.40, Note)
b. Insulation system designation (if field and armature use different classes of insulation systems, both insulation systems shall be given, that for the field being given first).

[2] Applies only to generators having overload capabilities for which temperature rises are given

[3] Both rated and no-load voltage to be given for compound-wound generators

Copyright National Electrical Manufacturers Association
Provided by IHS under license with NEMA
No reproduction or networking permitted without license from IHS
Not for Resale

3. Standstill with any winding continuously energized

c. Operation where low noise levels are required
d. Operation in a poorly ventilated room, in a pit, or in an inclined position
e. Operation in parallel with other power sources

24.81 RATE OF CHANGE OF LOAD CURRENT

Direct-current generators can be expected to operate successfully with repetitive changes in load current such as those which occur during a regular duty cycle provided that, for each change in current, the factor K, as defined in the following formula, does not exceed 15.

In the formula, the equivalent time for the current change to occur is the time which would be required for the change if the current increased or decreased at a uniform rate equal to the maximum rate at which it actually increases or decreases (neglecting any high-frequency ripple).

$$K = \frac{(\text{Change in current / rated-load current})^2}{\text{Equivalent time in seconds for current change to occur}}$$

24.82 SUCCESSFUL PARALLEL OPERATION OF GENERATOR

Successful parallel operation is attained if the load of any generator does not differ more than plus or minus 15 percent of its rated kilowatt load from its proportionate share, based on the generator ratings of the combined load, for any change in the combined load between 20 percent and 100 percent of the sum of the rated load of all of the generators. Successful parallel operation is considered to be obtained when the following conditions are met.

a. The generators should be at their normal operating temperatures.
b. The speed of the generators should be constant or decreasing with the change in speed proportional to the change in load to agree with the speed regulation of the prime mover
c. For compound-wound machines, the voltage drop at rated-load current across the series-field circuit (including the series-field proper, cables between series field, and main bus) of all machines should be made by the insertion of resistance if necessary.
d. Between any two compound wound machines, the equalizer connection circuit should have a resistance not exceeding 20 percent of the resistance of the series-field circuit of the smaller machine. However, lower values of resistance are desirable.

24.83 OPERATION OF DIRECT-CURRENT GENERATORS IN PARALLEL WITH RECTIFIED ALTERNATING-VOLTAGE POWER SUPPLY

24.83.1 When a direct-current generator is operated in parallel with a rectified alternating-voltage power supply, its performance may differ materially from that of the same generator when operated individually or in parallel with another direct-current generator. At the same time, its temperature rise, voltage regulation, and noise level may be increased, and successful commutation may not be achieved. The degree of difference will depend upon the magnitude of the ripple voltage impressed upon the commutator and is more likely to be significant when the rectifier pulse number is less than 6 or the amount of phase contol is more than 15 percent or both.

24.83.2 If the rectified alternating-voltage power supply has a continuous pulsation or ripple in its output voltage, this ripple voltage will be impressed across the generator commutator. The performance standards for direct-current generators in this Part 24 are based on individual operation or operation in parallel with a generator or battery and do not necessarily apply if the generator is operated in parallel with a power supply in which the magnitude of the resultant ripple current (peak to peak), expressed in percent of rated generator current, exceeds 6 percent at rated load and rated armature voltage.

24.83.3 When a direct-current generator is operated in parallel with some unfiltered rectifier power supplies, bearing currents may result. Ripple currents, transmitted by capacitive coupling between the rotor winding and core, may flow to ground. While these currents are small in magnitude, they may cause damage to either antifriction or sleeve bearings under certain circumstances. It is recommended that manufacturers be consulted to determine whether bearing currents may be a problem and, if so, what measures can be taken to minimize them.

24.84 COMPOUNDING

24.84.1 Flat-compounded generators should have the series winding so proportioned that the terminal voltage at no load is essentially the same as at rated load when the generator is operated at rated speed and normal operating temperature and with the field rheostat set to obtain rated voltage at rated load and left unchanged.

Copyright National Electrical Manufacturers Association
Provided by IHS under license with NEMA
No reproduction or networking permitted without license from IHS
Not for Resale

24.84.2 Other compounding of generators may be required to provide individual characteristics. Over-compounded generators should have the series windings so proportioned that the terminal voltage at rated load is greater than at no load when the generator is operated at rated speed and normal operating temperature and with the field rheostat set to obtain rated voltage at ratedload and left unchanged. A dropping voltage-current characteristic curve where the voltage at rated load is less than the no-load voltage is used for some applications and may require the series windings to be connected in differential with respect to the shunt field.

Copyright National Electrical Manufacturers Association
Provided by IHS under license with NEMA
No reproduction or networking permitted without license from IHS

Not for Resale

Section IV

PERFORMANCE STANDARDS APPLYING TO ALL MACHINES

Part 30

APPLICATION CONSIDERATIONS FOR CONSTANT SPEED MOTORS USED ON A SINUSOIDAL BUS WITH HARMONIC CONTENT AND GENERAL PURPOSE MOTORS USED WITH VARIABLE-VOLTAGE OR VARIABLE-FREQUENCY CONTROLS OR BOTH

30.0 SCOPE

The information in this section applies to NEMA Designs A and B squirrel-cage motors covered by Part 12 and to motors covered by Part 20 rated 5000 horsepower or less at 7200 volts or less, when used on a sinusoidal bus with harmonic content, or when used with variable-voltage or variable-frequency controls, or both.

NEMA Designs C and D motors and motors larger than 5000 horsepower and voltages greater than 7200 volts are excluded from this section and the manufacturer should be consulted regarding their application.

For motors intended for use in hazardous (classified) locations refer to 30.02.2.10.

30.01 APPLICATION CONSIDERATIONS FOR CONSTANT SPEED MOTORS USED ON A SINUSOIDAL BUS WITH HARMONIC CONTENT

30.01.1 Efficiency

Efficiency will be reduced when a motor is operated on a bus with harmonic content. The harmonics present will increase the electrical losses which decrease efficiency. This increase in losses will also result in an increase in motor temperature, which further reduces efficiency.

30.01.2 Derating for Harmonic Content

Harmonic currents are introduced when the line voltages applied to a polyphase induction motor include voltage components at frequencies other than nominal (fundamental) frequency of the supply. Consequently, the temperature rise of the motor operating at a particular load and per unit voltage harmonic factor will be greater than that for the motor operating under the same conditions with only voltage at the fundamental frequency applied.

When a motor is operated at its rated conditions and the voltage applied to the motor consists of components at frequencies other than the nominal frequency, the rated horsepower of the motor should be multiplied by the factor shown in Figure 30-1 to reduce the possibility of damage to the motor. This curve is developed under the assumption that only harmonics equal to odd multiples (except those divisible by three) of the fundamental frequency are present. It is assumed that any voltage unbalance or any even harmonics, or both, present in the voltage are negligible. This derating curve is not intended to apply when the motor is operated at other than its rated frequency nor when operated from a variable voltage or a variable frequency power supply, or both.

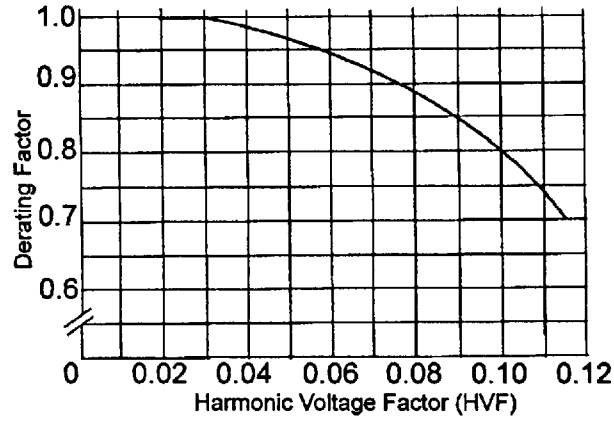

Figure 30-1
PROPOSED DERATING CURVE FOR HARMONIC VOLTAGES

30.01.2.1 Harmonic Voltage Factor (HVF) Defined

The harmonic voltage factor (HVF) is defined as follows:

$$\sqrt{\sum_{n=5}^{n=\infty} \frac{(V_n)^2}{n}}$$

Where:

n = order of odd harmonic, not including those divisible by three

Vn = the per-unit magnitude of the voltage at the nth harmonic frequency

Example: With per-unit voltages of 0.10, 0.07, 0.045, and 0.036 occurring at the 5, 7, 11, and 13th harmonics, respectively, the value of the HVF is:

Copyright National Electrical Manufacturers Association
Provided by IHS under license with NEMA
No reproduction or networking permitted without license from IHS
Not for Resale

$$\sqrt{\frac{0.10^2}{5}+\frac{0.07^2}{7}+\frac{0.045^2}{11}+\frac{0.036^2}{13}}=0.0546$$

30.01.3 Power Factor Correction

The proper application of power capacitors to a bus with harmonic currents requires an analysis of the power system to avoid potential harmonic resonance of the power capacitors in combination with transformer and circuit inductance. For power distribution systems which have several motors connected to a bus, power capacitors connected to the bus rather than switched with individual motors are recommended to minimize potentially resonant combinations of capacitance and inductance, and to simplify the application of any tuning filters that may be required. This requires that such bus-connected capacitor banks be sized so that proper bus voltage limits are maintained. (See 14.43 or 20.86.)

30.02 GENERAL PURPOSE MOTORS USED WITH VARIABLE-VOLTAGE OR VARIABLE-FREQUENCY CONTROLS OR BOTH

30.02.1 DEFINITIONS

30.02.1.1 Base Operating Point (Motor)

Base operating point for motors defines a reference operating point at a specified speed, frequency, fundamental voltage or current, and torque.

30.02.1.2 Breakaway Torque (Motor)

The torque that a motor is required to develop to break away its load from rest to rotation.

30.02.1.3 Constant-Horsepower Speed Range (Drive)

The portion of its speed range within which the drive is capable of maintaining essentially constant horsepower (for the defined time rating).

30.02.1.4 Constant-Torque Speed Range (Drive)

The portion of its speed range within which the drive is capable of maintaining essentially constant torque for the defined time rating.

30.02.1.5. Drive

A drive is a combination of the power converter (controller), motor, and any motor mounted auxiliary devices.

Examples of motor mounted auxiliary devices are encoders, tachometers, thermal switches and detectors, air blowers, heaters, and vibration sensors

30.02.1.6 Drive Speed-Range

All the speeds that can be obtained in a stable mode by action of part (or parts) of the motor drive system.

30.02.1.7 Drive System Response

The dynamic output of the drive in combination with the driven load as a function of a defined reference control input.

30.02.1.8 Magnetizing Current

The reactive current which flows in a motor operating at no load with applied fundamental voltage and frequency equal to those at the base point.

30.02.1.9 Maximum Operating Speed

Maximum operating speed is the upper limit of the rotational velocity at which a motor may operate based on mechanical considerations.

30.02.1.10 Motor Base Rating

When a motor is applied to an inverter, the base rating shall be the nameplated horsepower, voltage, frequency, speed, and torque (as determined from horsepower and speed).

30.02.1.11 Motor Output Capability

The motor is capable of producing constant torque (horsepower proportional to speed) at and below base speed, and constant horsepower (torque inversely proportional to speed) at and above base speed, except where limited by the following.

a. Effect of reduced speed on cooling (See 30.02.2.5)
b. Additional losses introduced by harmonic content (Under consideration.)

30.02.1.12 Overload Capability

Overload capability is the maximum power or torque level to which a motor may be subjected for a stated period of time beyond which permanent damage or significant performance deterioration occurs.

30.02.1.13 Pulsating Torque

The single amplitude of variation in torque from the average torque.

30.02.1.14 Rated Temperature

The rated temperature is the maximum allowable winding temperature of the motor when the drive is delivering rated output at any speed within the rated speed range for a defined and specified period of time.

30.02.1.15 Regeneration

Regeneration is the process of returning energy to the power source.

30.02.1.16 Regenerative Braking

Regenerative braking is a form of dynamic braking in which the kinetic energy of the motor and driven machinery is returned to the power supply system.

Copyright National Electrical Manufacturers Association
Provided by IHS under license with NEMA
No reproduction or networking permitted without license from IHS

Not for Resale

30.02.1.17 Slip

Slip is the quotient of (A) the difference between synchronous speed and the actual speed of the rotor to (B) the synchronous speed expressed as a ratio, or as a percentage.

30.02.1.18 Slip Rpm

Slip rpm is the difference between the speed of a rotating magnetic field (synchronous speed) and that of a rotor, expressed in revolutions per minute.

30.02.1.19 Speed Stability

Speed stability is the amplitude of variation in speed from the average speed, expressed in percent, throughout the entire speed range when the drive is connected to the driven equipment.

30.02.1.20 Variable-Torque Speed Range (Drive)

The portion of its speed range within which the drive is capable of maintaining a varying level of torque (for the defined time rating) generally increasing with speed. It is common for the term variable-torque to be used when referring to a torque which varies as the square of the speed and hence the power output varies as the cube of the speed.

30.02.1.21 Voltage Boost

That amount of additional voltage above the normal voltage value based on constant volts per hertz which must be applied at any frequency to compensate for the voltage drop in the stator winding.

30.02.1.22 Volts/Hertz Ratio (Base)

The base volts/hertz ratio is the ratio of fundamental voltage to frequency at the base operating point.

30.02.2 APPLICATION CONSIDERATIONS

30.02.2.1 Torque

30.02.2.1.1 OPERATION BELOW BASE SPEED

The torque produced by an ac motor is approximately proportional to the ratio of the input (fundamental) voltage divided by frequency. Therefore, to develop constant torque below base speed the input voltage should be varied to maintain approximately rated volts per hertz. At frequencies below approximately 30 hertz an increase in the volts per hertz ratio may be required to maintain constant torque. For applications that require less than rated torque below base speed, system economics may be improved by operation at a reduced volts per hertz ratio.

30.02.2.1.2 OPERATION ABOVE BASE SPEED

Above base speed, an input voltage having a fundamental component equal to rated motor voltage should be maintained for constant horsepower operation. The maximum (breakdown) torque capability of the motor will limit the maximum speed at which constant horsepower operation is possible (refer to the motor manufacturer).

30.02.2.2 Current

30.02.2.2.1 RUNNING CURRENT

Inverters are generally rated in terms of a continuous current carrying capacity, a short term current carrying capacity, and a peak current capacity. To properly choose the size of inverter required in an application, consideration should be given to the peak and transient values in addition to the rms value of motor current, and the manner in which the system is to be operated. Because some level of current will exist at each of the harmonic frequencies characteristic of the particular type of inverter, the total rms sum of current required at full load may be from 5 percent to 10 percent greater than that level of current corresponding to operation on a sinusoidal power source. The magnitude of the peak values of the current waveform may vary from 1.3 to 2.5 times the rms value of the current, depending on the type of inverter considered and the motor characteristics. An additional margin from 10 percent to 50 percent in the current rating of the inverter should be considered to allow for possible overload conditions on the motor so as not to trip the inverter on such short time overcurrent demand. When the motor and inverter are used in a system where sudden changes in load torque or frequency might occur, then the inverter should be sized based on the peak value of the transient current which results from the sudden change. Also, when changing from one operating speed to another, if the rate of change in frequency is greater than the possible rate of change in motor speed and if the slip increases beyond the value of slip for full load, then the amount of rms current or peak current required from the inverter may exceed that of the steady state requirements.

30.02.2.2.2 STARTING CURRENT

In a stall condition, the amount of current drawn by an induction motor is primarily determined by the magnitude and frequency of the applied voltage and the impedance of the motor. Under variable frequency control, motors are normally started by applying voltage to the motor at a low frequency (1 to 3 hertz). The current drawn by the motor under this condition is mainly a function of the equivalent stator and rotor resistances since the reactive impedance is small because of the low frequency. In order to provide sufficient starting torque, it is necessary to provide an increase in voltage (voltage boost) at low frequencies in order to overcome this resistive drop in the motor. This voltage boost is the product of the required phase current (for the level of breakaway torque needed) and the stator phase resistance and the square root of 3 (to convert phase quantity to line-to-line value). A wye connection is assumed. For rated torque at start it will be necessary to adjust the voltage boost to have at least rated current. Since stator and rotor resistances vary with temperature, the

Copyright National Electrical Manufacturers Association
Provided by IHS under license with NEMA
No reproduction or networking permitted without license from IHS

Not for Resale

actual starting current will be a function of the machine temperature.

CAUTION: The use of voltage boost at low frequencies under no load conditions will increase motor heating. When voltage boost is required to achieve greater than 150 percent breakaway torque, the motor should not be operated under voltage boost condition at frequencies less than 10 hertz for more than 1 minute.

30.02.2.3 Efficiency

Motor efficiency will be reduced when it is operated on an inverter. The harmonics present will increase the electrical losses, which decrease efficiency. This increase in losses will also result in an increase in motor temperature, which further reduces efficiency.

30.02.2.4 Maximum Safe Operating Speeds

The maximum safe operating speed capability of a typical standard motor when used on an adjustable speed power supply, direct drive, at 0–40°C ambient temperature, should not exceed the values given in Table 30-1. For possible operation at speeds greater than those given in Table 30-1 consult the motor manufacturer. For motors not covered by Table 30-1, refer to 12.52.1 or 20.44.

Copyright National Electrical Manufacturers Association
Provided by IHS under license with NEMA
No reproduction or networking permitted without license from IHS

Not for Resale

Table 30-1
MAXIMUM SAFE OPERATING SPEEDS FOR TYPICAL STANDARD MOTORS USED ON ADJUSTABLE SPEED POWER SUPPLIES WITH DIRECT DRIVE

	Totally Enclosed Fan-Cooled			Open Dripproof		
	Synchronous Speed at 60 Hz					
	3600	1800	1200	3600	1800	1200
Horsepower	Maximum Safe Operating Speeds					
¼	7200	3600	2400	7200	3600	2400
⅓	7200	3600	2400	7200	3600	2400
½	7200	3600	2400	7200	3600	2400
¾	7200	3600	2400	7200	3600	2400
1	7200	3600	2400	7200	3600	2400
1.5	7200	3600	2400	7200	3600	2400
2	7200	3600	2400	7200	3600	2400
3	7200	3600	2400	7200	3600	2400
5	7200	3600	2400	7200	3600	2400
7.5	5400	3600	2400	7200	3600	2400
10	5400	3600	2400	5400	3600	2400
15	5400	3600	2400	5400	3600	2400
20	5400	3600	2400	5400	3600	2400
25	5400	2700	2400	5400	2700	2400
30	5400	2700	2400	5400	2700	2400
40	4500	2700	2400	5400	2700	2400
50	4500	2700	2400	4500	2700	2400
60	3600	2700	2400	4500	2700	2400
75	3600	2700	2400	3600	2700	2400
100	3600	2700	1800	3600	2700	1800
125	3600	2700	1800	3600	2700	1800
150	3600	2700	1800	3600	2700	1800
200	3600	2250	1800	3600	2700	1800
250	3600	2250	1800	3600	2250	1800
300	3600	2250	1800	3600	2250	1800
350	3600	1800	1800	3600	2250	1800
400	3600	1800	—	3600	2250	—
450	3600	1800	—	3600	2250	—
500	3600	1800	—	3600	2250	—

a. Standard NEMA Design A and B motors and frames per MG 1
b. Overspeeds of 10 percent above values in Table 30-1 (not to exceed 2 minutes in duration) except where the maximum safe operating speed is the same as the synchronous speed at 60 Hz, the overspeeds referenced in 12.52.1 apply
c. Direct drive (TS shaft) over 250 frame
d. Within the operating limits noted in the table, the motor is capable of constant horsepower from 60 through 90 hertz. Above 90 hertz the motor may not provide sufficient torque based on specified voltage to reach table speeds while under load
e. May require to refine balance for operation above nameplate speed
f. Contact the manufacturer for speeds and ratings not covered by the table
g. Considerations:
   1. Noise limits per 12.53 and vibration limits per 12.07 are not applicable
   2. Bearing life will be affected by the length of time operated at various speeds

Copyright National Electrical Manufacturers Association
Provided by IHS under license with NEMA
No reproduction or networking permitted without license from IHS
Not for Resale

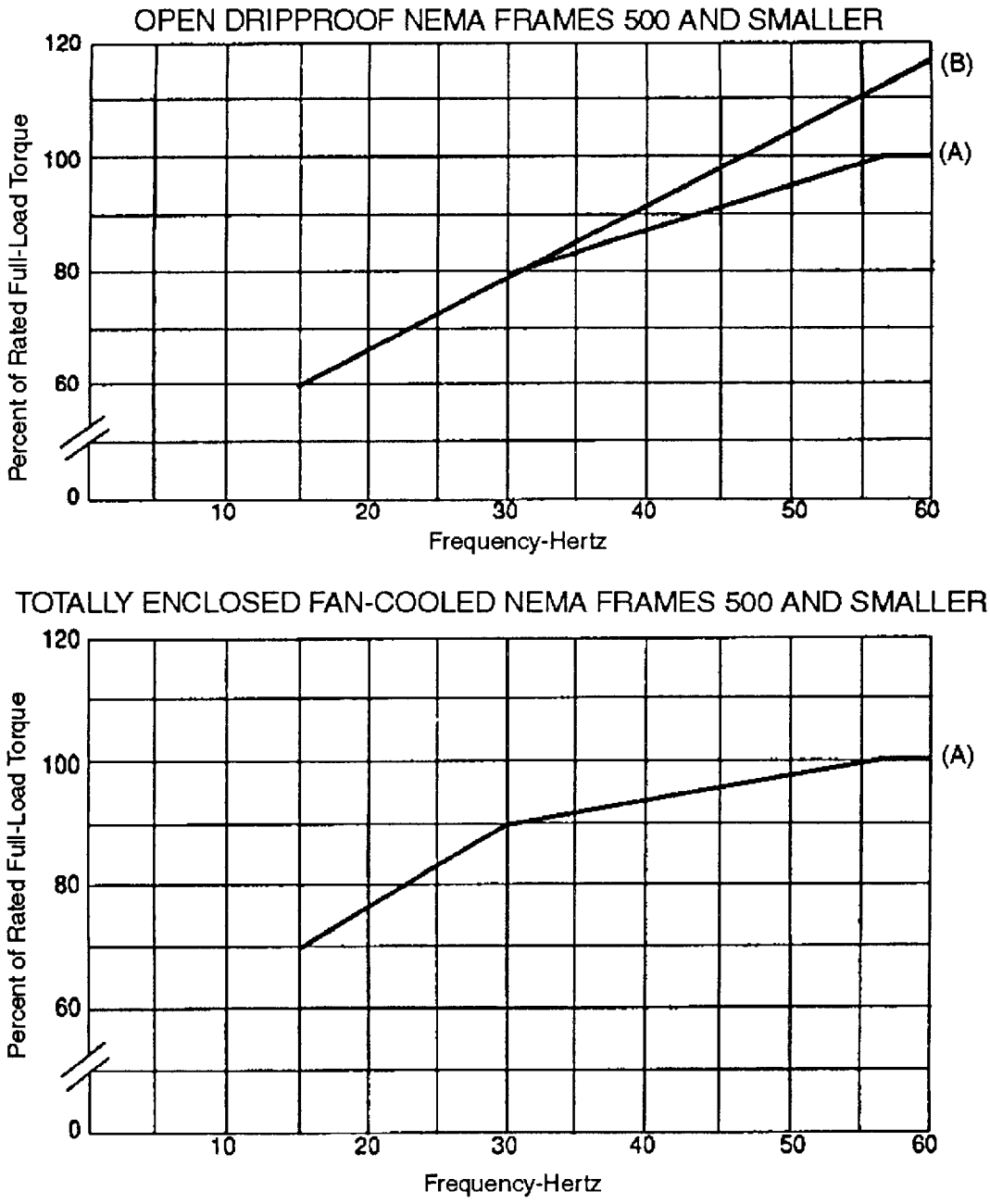

Figure 30-2
THE EFFECT OF REDUCED COOLING ON THE TORQUE CAPABILITY AT REDUCED SPEEDS OF 60 HZ NEMA DESIGN A AND B MOTORS

NOTES:
1—Curve Identification
a. Limit for Class B 80°C or Class F 105°C rise by resistance, 1.0 service factor.
b. Limit for Class B 90°C or Class F 115°C rise by resistance, 1.15 service factor.
2—All curves are based on a sinusoidal wave shape, rated air-gap flux. Additional derating for harmonic voltages should be applied as a multiplier to the above limits.
3—All curves are based on non-injurious heating which may exceed rated temperature rise.
4—Curves are applicable only to frame sizes and design types indicated. For larger frames or other design types consult the motor manufacturer.

Copyright National Electrical Manufacturers Association
Provided by IHS under license with NEMA
No reproduction or networking permitted without license from IHS
Not for Resale

30.02.2.5 Derating and Torque Capability at Reduced Speeds

Induction motors to be operated in adjustable-speed drive applications should be derated as a result of the effect of reduced speed on the cooling of the motor and the effect of the additional losses introduced by harmonics in the power source.

30.02.2.5.1 TORQUE DERATING BASED ON REDUCTION IN COOLING

To account for the effect of the reduction in cooling resulting from any reduction in operating speed, the motor should be derated in accordance with Figure 30-2. The proposed derating may be inherent in the load speed-torque characteristics, or may require selection of an oversize motor. The curves are applicable only to the NEMA frame sizes and Design types as indicated, and as noted, additional derating for harmonics may be required. For larger NEMA frames or other Design types consult the motor manufacturer.

The curves in Figure 30-2 represent the thermal capability of Design A and B motors under the conditions noted, and are based on non-injurious heating which may exceed rated temperature rise for the class of insulation. This is analogous to operation of a 1.15 service factor motor at service factor load (with rated voltage and frequency applied) as evidenced by the 115 percent point at 60 hertz for a 1.15 service factor motor.

30.02.2.5.2 TORQUE DERATING DURING INVERTER OPERATION

In the case of inverter operation, the available torque from the motor is usually lower than on a sinusoidal voltage source. The reduction results from the additional temperature rise due to harmonic losses and also from the voltage-frequency characteristics of some inverters.

The temperature rise at any load-speed point depends on the individual motor design, the type of cooling, the effect of the reduction in speed on the cooling, the voltage applied to the motor and the characteristics of the inverter. When determining the derating factor, the thermal reserve of the particular motor is important. Taking all of these matters into account, the derating factor at rated frequency ranges from 0 to 20 percent.

Figure 30-3 shows examples of a derating curve for a typical motor for which the thermal reserve of the motor at rated frequency is less than the additional temperature rise resulting from operation on an inverter and one for which the thermal reserve is greater. It is not possible to produce a curve which applies to all cases. Other motors with different thermal reserve, different methods of cooling (self-circulation cooling or independent cooling), and used with other types of inverters will have different derating curves.

There is no established calculation method for determining the derating curve for a particular motor used with a particular inverter that can be used by anyone not familiar with all of the details of the motor and inverter characteristics. The preferred method for determining the derating curve for a class of motors is to test representative samples of the motor design under load while operating from a representative sample of the inverter design and measure the temperature rise of the winding.

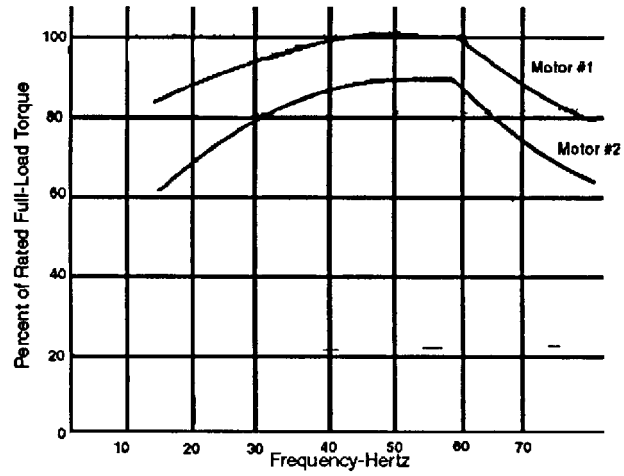

Figure 30-3
EXAMPLES OF TORQUE DERATING OF NEMA MOTORS WHEN USED WITH INVERTER

30.02.2.6 Torque Capability Above Base Speed

The curves in Figure 30-4 represent the load which the defined motor is capable of carrying above base speed. The curves represent operation at constant horsepower for 1.0 service factor motors and similar performance for 1.15 service factor motors. The maximum frequency of 90 hertz is established based on the approximate peak torque capability of NEMA Design A and B motors assuming operation at a constant level of voltage equal to rated voltage from 60 to 90 hertz.

For operation above 90 hertz at a required horsepower level, it may be necessary to utilize a motor with a greater horsepower rating at 60 hertz.

30.02.2.7 Sound

Sound levels should be considered when using induction motors with a variable frequency and voltage power supply. Sound levels produced thus will be higher than published values when operated above rated speed. At certain frequencies mechanical resonance or magnetic noise may cause a significant increase in sound levels, while a change in frequency and/or voltage may reduce the sound level.

Experience has shown that typically an increase in the A-weighted noise level by up to 6dB occurs in the case of operation with variable-voltage input (VVI) or current

Copyright National Electrical Manufacturers Association
Provided by IHS under license with NEMA
No reproduction or networking permitted without license from IHS

Not for Resale

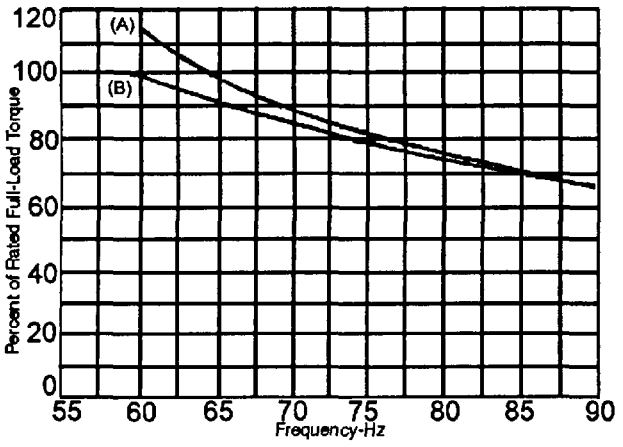

Figure 30-4
TORQUE CAPABILITY ABOVE BASE SPEED

NOTES
1—Curve Identification
a. Limit for Class B 80°C or Class F 105°C rise by resistance, 1.0 service factor.
b. Limit for Class B 90°C or Class F 115°C rise by resistance, 1.15 service factor.
2—All curves are based on a sinusoidal wave shape, constant voltage equal to rated voltage. Additional derating for harmonic voltages should be applied as a multiplier to the above limits.
3—All curves are based on non-injurious heating which may exceed rated temperature rise.
4—Curves are applicable only to frame sizes and design types indicated. For larger frames or other design types consult the motor manufacturer.

source input (CSI) inverters at rated frequency, in comparison with operation at sinusoidal supply voltage and frequency, and by up 5dB to 15dB in the case of operation with pulse-width-modulated (PWM) inverters. For other frequencies the noise levels may be higher. The fluctuation band is determined by the number of poles of the motors, the different pulse pattern of the inverter plus other factors.

30.02.2.8 Resonances, Sound, Vibration

When an induction motor is operated from an inverter, torque ripple at various frequencies may exist over the operating speed range. Consideration should be given to identifying the frequency and amplitude of these torques and determining the possible effect upon the motor and the driven equipment. It is of particular importance that the equipment not be operated longer than momentarily at a speed where a resonant condition exists between the torsional system and the electrical system (i.e., the motor electrical torque). For example, if the inverter is of the six-step type then a sixth harmonic torque ripple is created which would vary from 36 to 360 hertz when the motor is operated over the frequency range of 6 to 60 hertz. At low speeds, such torque ripple may be apparent as observable oscillations of the shaft speed or as torque and speed pulsations (usually termed 'cogging'). It is also possible that some speeds within the operating range may correspond to the natural mechanical frequencies of the load or support structure and operation other than momentarily could be damaging to the motor and or load and should be avoided at those speeds.

30.02.2.9 Voltage Stress

When operated under usual service conditions (14.02 or 20.80.2) the following limit values at the motor terminals should be observed.

Motors with base rating voltage ≤ 600 volts:

$V_{peak} \leq 1kV$

Rise time ≥ 2 μs

Motors with base rating voltage > 600 volts:

$V_{peak} \leq 2.5$ pu

Rise time ≥ 1 μs

Where V_{peak} is single amplitude and one pu is peak of the line-to-ground rated base voltage (1 pu = $\sqrt{2}\ V_{LL} / \sqrt{3}$).

30.02.2.10 Power Factor Correction

The use of power capacitors for power factor correction on the load side of an electronic power supply connected to an induction motor is not recommended. The proper application of such capacitors requires an analysis of the motor, electronic power supply, and load characteristics as a function of speed to avoid potential over-excitation of the motor, harmonic resonance, and capacitor over-voltage. For such applications the electronic power supply manufacturer should be consulted.

30.02.2.11 Operation in Hazardous (Classified) Locations

WARNING: Motors operated from variable frequency or variable voltage power supplies or both, should not be used in any Division 1 hazardous (classified) locations unless the motor is identified on the nameplate as acceptable for variable speed operation when used in Division 1 hazardous (classified) locations.

For motors to be used in any Division 2 hazardous (classified) locations, the motor manufacturer should be consulted.

Failure to comply with this warning could result in an unsafe installation that could cause damage to property or serious injury or death to personnel, or both.

Copyright National Electrical Manufacturers Association
Provided by IHS under license with NEMA
No reproduction or networking permitted without license from IHS

Not for Resale

Section IV
PERFORMANCE STANDARDS APPLYING TO ALL MACHINES
Part 31
DEFINITE-PURPOSE INVERTER-FED MOTORS

31.0 SCOPE

The information in this section applies to definite purpose squirrel-cage induction motors rated 5000 horsepower or less at 7200 volts or less, intended for use with adjustable-voltage and adjustable-frequency controls.

31.10 SERVICE CONDITIONS

31.10.1 General

Machines should be properly selected with respect to their service conditions, usual or unusual, both of which involve the environmental conditions to which the machine is subjected and the operating conditions. Machines conforming to Part 31 of this publication are designed for operation in accordance with their ratings under usual service conditions. Some machines may also be capable of operating in accordance with their ratings under one or more unusual service conditions. Special machines may be required for some unusual conditions.

Service conditions, other than those specified as usual, may involve some degree of hazard. The additional hazard depends upon the degree of departure from usual operating conditions and the severity of the environment to which the machine is exposed. The additional hazard results from such things as overheating, mechanical failure, abnormal deterioration of the insulation system, corrosion, fire, and explosion.

Although past experience of the user may often be the best guide, the manufacturer of the driven or driving equipment or the manufacturer of the machine, or both, should be consulted for further information regarding any unusual service conditions which increase the mechanical or thermal duty on the machine and, as a result, increase the chances for failure and consequent hazard. This further information should be considered by the user, his consultants, or others most familiar with the details of the application involved when making the final decision.

31.10.2 Usual Service Conditions

a. An ambient temperature in the range of -15°C to 40°C for machines with grease lubricated bearings, 0°C to 40°C for machines with oil lubricated bearings or, when water cooling is used, in the range of 5°C to 40°C

b. An altitude which does not exceed 3300 feet (1000 meters)

c. Installation on a rigid mounting surface

d. Installation in areas or supplementary enclosures which do not seriously interfere with the ventilation of the machine

e. For motors in frame sizes per 31.20

   1. V-belt drive in accordance with 14.67
   2. Flat-belt, chain, and gear drives in accordance with 14.07

31.10.3 Unusual Service Conditions

The manufacturer should be consulted if any unusual service conditions exist which may affect the construction or operation of the motor. Among such conditions are:

a. Exposure to:

   1. Combustible, explosive, abrasive, or conducting dusts
   2. Lint or very dirty operating conditions where the accumulation of dirt may interfere with normal ventilation
   3. Chemical fumes, flammable or explosive gases.
   4. Nuclear radiation
   5. Steam, salt-laden air, or oil vapor
   6. Damp or very dry locations, radiant heat, vermin infestation, or atmospheres conducive to the growth of fungus
   7. Abnormal shock, vibration, or mechanical loading from external sources
   8. Abnormal axial or side thrust imposed on the motor shaft

b. Operation where:

   1. There is excessive departure from rated voltage or frequency, or both
   2. Low noise levels are required
   3. The voltage at the motor terminals is unbalanced by more than one percent

c. Operation at speeds above the highest rated speed

d. Operation in a poorly ventilated room, in a pit, or in an inclined position

e. Operation where subjected to:

   1. Torsional impact loads
   2. Repetitive abnormal overloads
   3. Reversing or electric braking

f. Belt, gear, or chain drives for machines not covered by 31.20

Copyright National Electrical Manufacturers Association
Provided by IHS under license with NEMA
No reproduction or networking permitted without license from IHS

Not for Resale

31.20 DIMENSIONS, TOLERANCES, AND MOUNTING FOR FRAME DESIGNATIONS

Frame designations for definite-purpose inverter-fed motors shall be in accordance with Part 4.

31.30 RATING

31.30.1 Basis Of Rating

Definite-purpose inverter-fed ac induction motors covered by this Part shall be rated based on identification of the four load points shown in and defined in Figure 31-1. The base rating shall be defined coincident with point (3) in Figure 31-1 by specifying the motor voltage, speed, and horsepower, or torque, at that point.

(1) Torque at minimum speed based on temperature considerations and voltage boost.

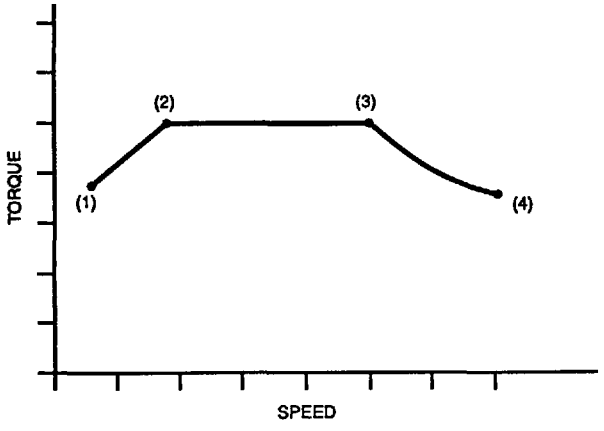

(2) Lowest speed of the constant torque range based on temperature considerations.

(3) Base rating point at upper end of constant torque range.

(4) Maximum operating speed based on constant horsepower and any limitation on rotational speed.

Figure 31-1
BASIS OF RATING

When the voltage ratings at reference points 3 and 4 are different, then, unless otherwise specified, the voltage is assumed to reach the maximum value at a frequency between points 3 and 4 per a constant volts to Hertz relationship equal to the voltage at point 3 divided by the frequency at point 3.

31.30.2 Horsepower And Speed Ratings

Preferred horsepower and speed ratings shall be as shown in Table 31-1.

NOTE—It is not practical to build induction motors of all horsepower ratings at all speeds.

Table 31-1
PREFERRED HORSEPOWER AND SPEED RATINGS

Output Horsepower					
½	10	75	400	1250	4000
¾	15	100	450	1500	4500
1	20	125	500	1750	5000
1½	25	150	600	2000	–
2	30	200	700	2250	–
3	40	250	800	2500	–
5	50	300	900	3000	–
7½	60	350	1000	3500	–

Speed (RPM)			
300	650	1750	5000
400	850	2500	7000
500	1150	3500	10000

31.30.3 Speed Range

Defined speed ranges illustrated by the points shown in Figure 31-1 are based on the base rating point (3) speed for a given machine.

31.30.3.1 LOWEST SPEED OF CONSTANT TORQUE RANGE—POINT (2)

The preferred ratio of speed at base rating point (3) to that at point (2) shall be 1, 2, 3, 4, 6, or 10.

31.30.3.2 MAXIMUM OPERATING SPEED—POINT (4)

The preferred ratio of speed at point (4) to that of base rating point (3) shall be 1, 1½, 2, 2½, 3, or 4.

31.30.3.3 MINIMUM SPEED—POINT (1)

The minimum speed may be zero.

NOTE— It is not practical to build induction motors of all horsepower ratings at all speed ranges or combinations of speed ranges.

31.30.3.4 OTHER SPEED RANGES

Other speed ranges may be specified by agreement between the purchaser and manufacturer.

31.30.4 Base Voltages

Preferred voltages shall be 115, 230, 460, 575, 2300, 4000, 4600, 6600, and 7200 volts. These voltage ratings apply to the maximum level of voltage applied to the motor over the rated speed range.

NOTE—It is not practical to build induction motors of all horsepower ratings at all voltages.

Copyright National Electrical Manufacturers Association
Provided by IHS under license with NEMA
No reproduction or networking permitted without license from IHS

Not for Resale

31.30.5 Number Of Phases

31.30.5.1 PREFERRED

The preferred number of phases shall be as follows.

HP	Phase
< 0.75	1
≥ 0.75	3

31.30.5.2 OTHER

When the number of phases required is other than those listed in 31.30.5.1 are required, these shall be equal to 2N or 3N, where N is an integer.

31.30.6 Direction of Rotation

a. F1 or F2 arrangement, foot mounted

The standard direction of rotation for definite purpose inverter-fed motors having an F1 or F2 arrangement and foot mounting is counter-clockwise when phase sequence 1, 2, and 3 are applied to terminals T1, T2, and T3, respectively, when facing the end of the motor for which the conduit box is on the right and the feet are down.

b. Other arrangements

The standard direction of rotation for definite purpose inverter-fed motors having arrangements other than F1 or F2 is counter-clockwise when phase sequence 1, 2, and 3 are applied to terminals T1, T2, and T3, respectively, when facing the opposite drive end.

WARNING—Direction of rotation should be checked by momentary application of voltage before connecting the motor to the driven equipment.

31.30.7 Service Factor

When operated at rated voltage and frequency within the defined speed range, an adjustable-speed motor covered by this Part 31 and having a rated temperature rise in accordance with 31.40.1.2 shall have a service factor of 1.0.

31.40 PERFORMANCE

31.40.1 Temperature Rise

31.40.1.1 TEMPERATURE RISE

The maximum intermittent temperature rise of the windings, above the temperature of the cooling medium, shall not exceed the values given in Table 31-2 when tested at any rated load within the rated speed range with the identified power supply. The relative equivalent temperature rise T_E for a defined load/speed cycle as determined according to 31.40.1.2 shall not exceed the values given in the table. All temperature rises in the table are based on a maximum ambient temperature of 40°C.

The temperature attained by cores, squirrel-cage windings, and miscellaneous parts shall not injure the insulation of the machine in any respect.

31.40.1.2 RELATIVE EQUIVALENT TEMPERATURE RISE

The load cycle of the definite purpose inverter-fed motor may be comprised of varying load conditions at varying speeds within the defined speed range. The minimum load within a load cycle may have the value zero.

The reference to a load cycle, given in this standard, is to be considered as integral figures over a long period of time such that thermal equilibrium is reached. It is not necessary that each cycle be exactly the same as another (which would be periodic duty, which implies times too short for thermal equilibrium to be reached). They will be similar and can be integrated to give a nominal pattern with the same thermal life expectancy. An example of a load cycle based on temperature and time of operation is shown in Figure 31-2.

The rate of thermal ageing of the insulation system will be dependent on the value of the temperature and the duration of operation at the different loads and speeds within the load cycle. A thermal life expectancy of the motor operating over the load cycle can be derived in relation to that for the motor operating continuously at a temperature equal to that for the temperature classification of the insulation system. This relative thermal life expectancy can be calculated by the following equation.

$$\frac{1}{TL} = \Delta t_1 \times 2^{\frac{\Delta T_1}{K}} + \Delta t_2 \times 2^{\frac{\Delta T_2}{K}} + \ldots + \Delta t_n \times 2^{\frac{\Delta T_v}{K}}$$

Where:

TL = relative thermal life expectancy for the load cycle related to the thermal life expectancy for continuous operation at the temperature rating of the insulation class

$\Delta T_1 \ldots \Delta T_n$ = difference between the temperature rise of the winding at each of the various loads within the load cycle and the permissible temperature rise for the insulation class

$\Delta t_1 \ldots \Delta t_n$ = period of time for operation at the various loads expressed as a per unit value of the total time for the load cycle

k = 10°C = difference in temperature rise which results in a shortening of the thermal life expectancy of the insulation system by 50%

A relative equivalent temperature rise based on continuous operation at that temperature rise for the load cycle time and resulting in the same level of relative

Copyright National Electrical Manufacturers Association
Provided by IHS under license with NEMA
No reproduction or networking permitted without license from IHS
Not for Resale

Table 31-2
TEMPERATURE RISE

Insulation Class	Maximum Intermittent Winding Temperature Rise Degrees C		Relative Equivalent Temperature Rise (T_E) Degrees C	
	Method of Temperature Determination		Method of Temperature Determination	
	Resistance	Embedded Detector	Resistance	Embedded Detector
A	70	80	60	70
B	100	110	80	90
F*	130	140	105	115
H*	155	170	125	140

* Where a Class F or H insulation system is used, special consideration should be given to bearing temperature, lubrication, etc.

NOTES

1— For machines which operate under prevailing barometric pressure and which are designed not to exceed the specific temperature rise at altitudes from 3300 feet (1000 meters) to 13000 feet (4000 meters), the temperature rise, as checked by tests at low altitudes, shall be less than those listed in the foregoing table by 1 percent of the specified temperature rise for each 330 feet (100 meters) of altitude in excess of 3300 feet (1000 meters).

Preferred values of altitude are 3300 feet (1000 meters), 6600 feet (2000 meters), 9900 feet (3000 meters), 13200 feet (4000 meters), and 16500 feet (5000 meters).

2— The temperature rises given in the above table are based upon a reference temperature of 40°C. Motors intended for use in higher ambient temperatures should have temperature rises not exceeding the value calculated from the formula below, rounded off to the nearest 5 degrees:

Temperature rise = $0.9(T_c - T_a)$

Where:

T_a = ambient temperature

T_c = for maximum intermittent termperature rise =

115°C for Class A insulation
150°C for Class B insulation
180°C for Class F insulation
210°C for Class H insulation

for relative equivalent temperature rise=

115°C for Class A insulation
130°C for Class B insulation
155°C for Class F insulation
180°C for Class H insulation

When a higher ambient temperature than 40°C is required, preferred values of ambient temperature are 50°C, 65°C, 90°C, and 115°C.

Copyright National Electrical Manufacturers Association
Provided by IHS under license with NEMA
No reproduction or networking permitted without license from IHS
Not for Resale

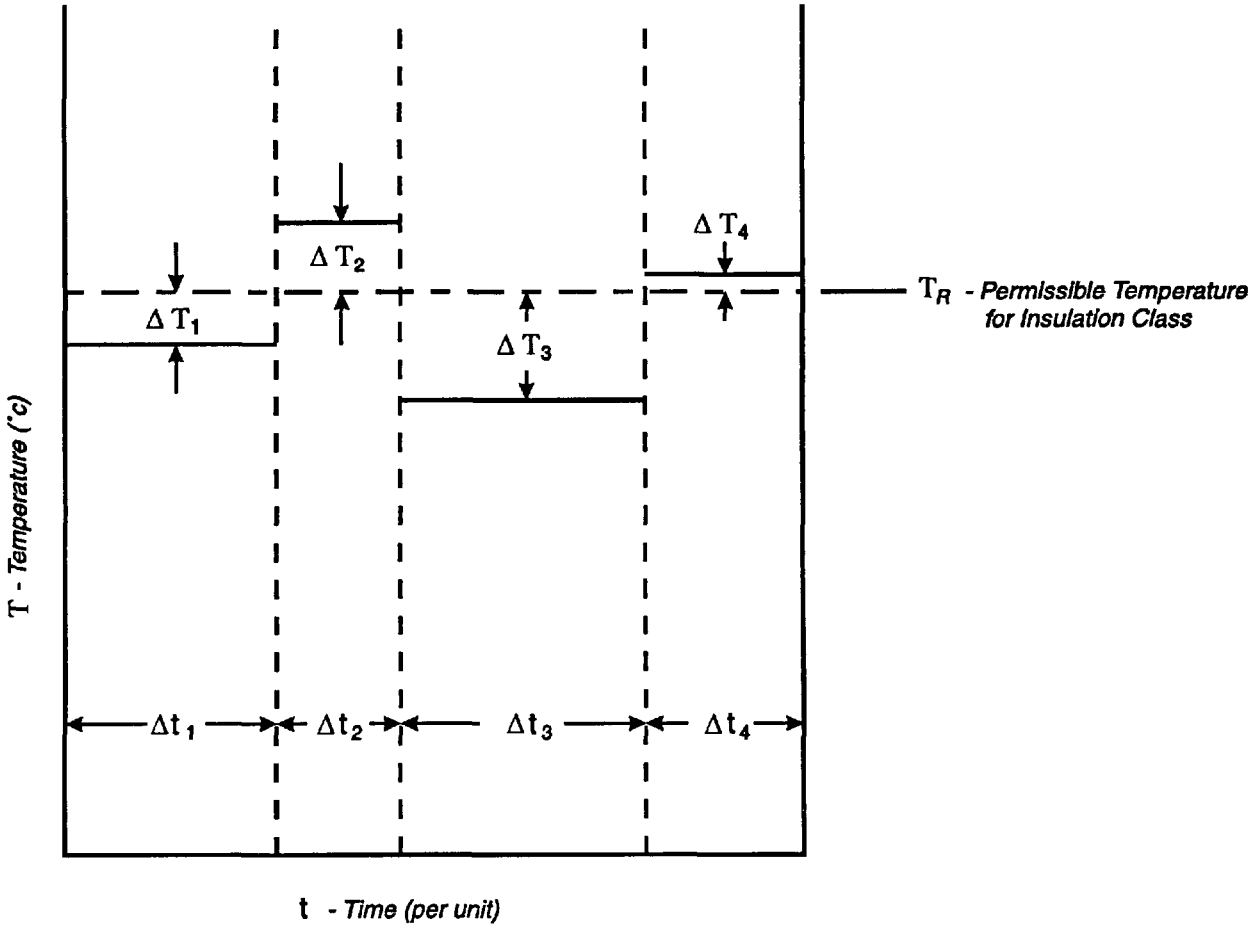

Figure 31-2
LOAD CYCLE BASED ON TEMPERATURE AND TIME OF OPERATION

Copyright National Electrical Manufacturers Association
Provided by IHS under license with NEMA
No reproduction or networking permitted without license from IHS
Not for Resale

thermal life expectancy for the defined load cycle can be determined as follows:

$$T_E = k \times LOG_2 \left(\frac{1}{TL}\right) + T_R$$

Where:

T_E = relative equivalent temperature rise

T_R = permissible temperature rise for insulation class (Figure 31-2; for example see 12.42, 12.43, or 20.40)

31.40.2 Torque

31.40.2.1 BREAKAWAY TORQUE

The motor should be capable of producing at least 140% breakaway torque requiring not more than 150% current when the voltage boost is adjusted to develop rated flux in the motor and when the inverter is able to produce the required minimum fundamental frequencies.

For frequencies below 5 hertz rated flux occurs approximately when

$$V_{LL} = \sqrt{3} \times I_L \times \frac{(R_{LL})}{2} + V_{LL_{rated}} \times \frac{f}{f_{rated}}$$

Where:

V_{LL} = line-to-line RMS voltage at the motor terminals

I_L = line current (RMS)

R_{LL} = line-to-line resistance at operating temperature

f = frequency

The voltage boost should not be adjusted to exceed a value of V_{LL} based on I_L equal to 1.5 times rated full load current to achieve higher breakaway torque without special consideration.

CAUTION—The use of voltage boost at low frequencies under no load conditions will increase motor heating. When voltage boost is required to achieve greater than 140 percent breakaway torque, the motor should not be operated at no load under full voltage boost condition.

31.40.2.2 BREAKDOWN TORQUE

The breakdown torque at any frequency within the defined frequency range shall be not less than 150 percent of the rated torque at that frequency when rated voltage for that frequency is applied.

31.40.3 Operating Limitations

31.40.3.1 STARTING REQUIREMENTS

While definite-purpose motors may be capable of being started across-the-line, the level of locked rotor current at line frequency and voltage may exceed that for general-purpose motors. The torque versus speed profile during across the line starting of the definite-purpose motor also may be different from that of the general-purpose motors and may not be suitable for the requirements of the load. For large motors the stator end-winding support may be inadequate. If across-the-line starting capability is required by the application, these factors should be considered when selecting the motor and controls.

31.40.3.2 VARIATIONS FROM RATED VOLTAGE

The rated motor fundamental line voltage as a function of motor speed is defined at the base rating point and implied at the various operating conditions in 31.30. Definite purpose inverter-fed motors shall operate successfully throughout their defined speed range when the applied fundamental voltage does not vary from the rated value at any operating point by more than plus or minus 10 percent. Performance with this variation will not necessarily be in accordance with operation at the rated voltage.

31.40.3.3 OCCASIONAL EXCESS CURRENT

Definite purpose inverter-fed motors shall be capable of withstanding an occasional excess current for a period of not less than 1 minute when the motor is initially at normal operating temperature. The magnitude of the current and the time in minutes between successive applications of this current are as follows.

Momentary Overload as a Percent of Base Current	Time Interval (minutes)
110	≥9
125	≥28
150	≥60

Repeated overloads may result in operation where winding temperatures are above the maximum values given by 31.40.1.1 which will result in reduced insulation life. If the overload is part of the normal duty cycle, the relative equivalent temperature rise must be calculated per 31.40.1.2 to ensure that the limits in 31.40.1.1 are not exceeded.

31.40.3.4 POWER FACTOR CORRECTION OR SURGE SUPPRESSION

The use of power capacitors for power factor correction or surge suppression on the load side of an electronic power supply connected to an induction motor is not

Copyright National Electrical Manufacturers Association
Provided by IHS under license with NEMA
No reproduction or networking permitted without license from IHS

Not for Resale

recommended. For such applications the control manufacturer should be consulted.

31.40.3.5 OVERSPEEDS

Definite purpose inverter-fed motors shall be so constructed that, in an emergency not to exceed 2 minutes, they will withstand without mechanical injury, overspeeds above the maximum operating speed in accordance with the following.

Maximum Operating Speed	Overspeed, Percent of Maximum Operating Speed
3601 and over	15
1801–3600	20
1800 and below	25

31.40.4 Insulation Considerations

31.40.4.1 LEAKAGE CURRENTS

High frequency harmonics of inverters can cause an increase in the magnitudes of leakage currents in the motor due to a reduction in the capacitive reactance of the winding insulation at higher frequencies. Established and safe grounding practices for the motor frame should therefore be followed.

31.40.4.2 VOLTAGE SPIKES

Inverters used to supply adjustable frequency power to induction motors do not produce sinusoidal output voltage waveforms. In addition to lower order harmonics, these waveforms also have superimposed on them steep-fronted, single-amplitude voltage spikes. Turn-to-turn, phase-to-phase, and ground insulation of stator windings are subjected to the resulting dielectric stresses. Suitable precautions should be taken in the design of drive systems to minimize the magnitude of these spikes.

When operated under usual service conditions (31.10), stator winding insulation systems for definite purpose inverter fed motors shall be designed to operate under the following limits at the motor terminals.

Motors with base rating voltages ≤600 volts:

$V_{peak} \leq$ 1600 volts

Rise time ≥ 0.1 μs

Motors with base rating voltage > 600 volts:

$V_{peak} \leq$ 2.5 pu

Rise time ≥ 1 μs

where V_{peak} is single amplitude and 1 pu is the peak of the line-to-ground voltage at the maximum operating speed point (4) defined in Figure 31-1 (1 pu = $\sqrt{2}/\sqrt{3}$ V_{LL}).

31.40.4.3 SHAFT VOLTAGES AND BEARING INSULATION

Additional shaft voltages occur from voltage and current peaks which are superimposed on the symmetrical phase quantities during inverter operation. These voltages will cause currents to flow through the bearings. Experience shows that this is not generally a problem on motors in frame sizes less than the 500 frame series. For larger frame sizes, the manufacturer should be consulted. If shaft voltages higher than 300 millivolts (peak) are present when tested per IEEE Standard 112, the resulting bearing currents can cause pitting of the bearings, scoring of the shafts, and eventual bearing failure. In such cases, it is recommended that the motor be equipped with an insulated bearing or that the shaft be suitably grounded.

31.40.4.4 NEUTRAL SHIFT

When inverters are applied to motors, the motor windings can be exposed to higher than normal voltages due to the neutral shift effect. Neutral shift is the voltage difference between the source neutral and the motor neutral. Its magnitude is a function of the total system design and in the case of some types of current source inverters can be as high as 2.3 per unit (1 pu = $\sqrt{2}/\sqrt{3}$ V_{LL}), resulting in motor line-to-ground voltages of up to 3.3 per unit, or 3.3 times the crest of the nominal sinusoidal line-to-ground voltage. In the case of a typical voltage source inverter, the magnitude of the line-to-ground voltage can be as high as $\sqrt{3}$ times the crest of the nominal sinusoidal line-to-ground voltage.

The magnitude of the neutral voltage can be reduced if the inverter is connected to an ungrounded power source or, if this is not possible, by isolating it from the source ground by using an isolation transformer, by using separate reactors in both the positive and the negative direct current link, or by connecting the motor neutral to the ground through a relatively low impedance. Proper selection of the method to reduce motor line-to-ground voltage should be coordinated with the system designer.

31.40.5 Resonances, Sound, Vibration

31.40.5.1 GENERAL

The motor and the driven equipment (system) have natural resonant frequencies in the lateral, axial, and torsional modes. When an adjustable frequency control is applied to the motor, the system is excited by a spectrum of harmonics coming from the control. This can affect the sound level, vibration level, and torsional response of the system. The system integrator should take these effects into consideration to ensure successful system performance.

Copyright National Electrical Manufacturers Association
Provided by IHS under license with NEMA
No reproduction or networking permitted without license from IHS

Not for Resale

31.40.5.2 SOUND AND VIBRATION

Machine sound and vibration are influenced by the following parameters.

a. Electromagnetic design
b. Type of electronic power supply
c. Resonance of frame structure and enclosure
d. Integrity, mass and configuration of the base mounting structure.
e. Reflection of sound and vibration originating in or at the load and shaft coupling
f. Windage

It is recognized that it is a goal that motors applied on inverter type supply systems for variable speed service should be designed and applied to optimize the reduction of sound and vibration in accordance with the precepts explained above. However, since many of these influencing factors are outside of the motor itself, it is not possible to address all sound and vibration concerns through the design of the motor alone.

31.40.5.3 TORSIONAL CONSIDERATIONS

When an induction motor is operated from an inverter, torque ripple at various frequencies may exist over the operating speed range. Consideration should be given to identifying the frequency and amplitude of these torques and determining the possible effect upon the motor and the driven equipment. It is of particular importance that the equipment not be operated longer than momentarily at a speed where a resonant condition exists between the torsional system and the electrical system (i.e., the motor electrical torque). For example, if the inverter is of the six-step type then a sixth harmonic torque ripple is created which would vary from 36 to 360 Hz when the motor is operated over the frequency range of 6 to 60 Hz. At low speeds, such torque ripple may be apparent as observable oscillations of the shaft speed or as torque and speed pulsations (usually termed "cogging"). It is also possible that some speeds within the operating range may correspond to the natural mechanical frequencies of the load or support structure and operation other than momentarily should be avoided at those speeds.

31.40.6 Bearing Lubrication At Low And High Speeds

Successful operation of the bearings depends on their ability to function within acceptable temperatures. Above a certain operating speed, depending on the design, size, and load, the losses in an oil lubricated sleeve bearing may increase to a point that the temperature exceeds the permissible limits with self-lubrication. Below a certain speed, self-lubrication may not be adequate and may result in abnormal wear or high temperature or both. In either case, forced lubrication will be required.

Grease-lubricated anti-friction bearings do not have similar problems at low speeds. Maximum operating speed for these bearings is limited due to temperature considerations and is a function of the bearing design, its size, the load and other considerations.

The maximum and minimum operating speeds should be taken into consideration in the selection of the bearing and lubrication systems for motors covered by this Part.

31.50 NAMEPLATE MARKING

31.50.1 Variable Torque Applications

The following minimum information necessary to characterize the motor for variable torque applications (torque proportional to speed squared) in which the maximum operating speed does not exceed the speed corresponding to the base rating point (3) defined in Figure 31-1 shall be given on all nameplates. All performance data is to be based on a sine wave power supply.

a. Manufacturer's name, serial number or date code, type, frame, and enclosure
b. The following data corresponding to base rating point (3) defined in Figure 31-1
    1. Horsepower
    2. Voltage
    3. Current
    4. Speed—RPM
    5. Frequency
c. Number of phases
d. Number of poles
e. Ambient temperature—degrees C
f. Insulation class
g. Time rating
h. Rotor Wk^2

31.50.2 Other Applications

For applications other than variable torque, the appropriate items selected from the following list should be given in addition to that stated in 31.50.1.

a. The following data corresponding to base rating points (1), (2), or (4) defined in Figure 31-1.
    1. Horsepower
    2. Voltage
    3. Current
    4. Speed—RPM
    5. Frequency
    6. Torque
b. Equivalent circuit parameters for R_1, R_2, X_1, X_2, X_m (see 1.61.6) in Ohms per phase (Wye equivalent) at 25°C for the base rating. For reconnectable winding multi-voltage motors the parameters are to be based on the higher voltage connection.

Copyright National Electrical Manufacturers Association
Provided by IHS under license with NEMA
No reproduction or networking permitted without license from IHS

Not for Resale

31.60 TESTS

31.60.1 Test Method

The method of testing definite purpose inverter-fed motors shall be in accordance with IEEE Standard 112.

31.60.2 Routine Tests

a. Measurement of winding resistance.

b. No-load readings of current, power, and speed at base rating voltage and frequency (point (3) of Figure 31-1) using sinusoidal voltage. For motors with the base rating at other than 60 Hertz, these readings shall be permitted to be taken at 60 Hertz at the corresponding voltage for 60 Hertz.

c. High-potential test in accordance with 3.01, 12.03, or 20.48.

31.60.3 Performance Tests

Performance tests, when required, shall be conducted on a sinusoidal power supply unless otherwise specified by mutual agreement between the manufacturer and the user.

31.70 ACCESSORY MOUNTING

When provided, a Type FC face for the mounting of tachometers, resolvers, encoders or similar accessories on the end opposite the drive end of definite purpose inverter-fed motors shall be per 11.35 based on FAK dimensions of 4.50 or 8.50 inches.

Care should be used in the selection of the accessory coupling to ensure it is able to accommodate any misalignment likely to be encountered in the assembly. If the driven accessory is a tachometer, resolver, or encoder, it also may be necessary to ensure that the coupling has adequate torsional stiffness for the desired response, resolution and stability in the intended application.

If the motor has an insulated bearing or similar means to guard against bearing currents (see 31.40.4.3), it may be necessary to provide an insulated coupling or other means to prevent such shaft potentials from being applied to connected accessories.

Copyright National Electrical Manufacturers Association
Provided by IHS under license with NEMA
No reproduction or networking permitted without license from IHS

Not for Resale

Copyright National Electrical Manufacturers Association
Provided by IHS under license with NEMA
No reproduction or networking permitted without license from IHS

Not for Resale

INDEX

The NEMA Standards Publication for Motors and Generators is logically arranged and contains cues and cross-references to help the reader locate desired information. The text is divided into four major sections: Section I, "Standards Applying to All Machines," with green tabs; Section II "Small and Medium Machines," with yellow tabs; Section III, "Large Machines", with orange tabs; and Section IV, "Performance Standards Applying to All Machines," with blue tabs. The 4 major sections are divided into a total of twenty-eight general "Parts" with a characteristic paragraph number series and subject title marked on the colored tabs. According to the paragraph number series, the "Part" number precedes the decimal point and the sequence number follows the decimal point. For example: under the keyword "efficiency," paragraphs numbered in the 1.XX series will indicate general definition information; the 12.XX and 15.XX series indicates efficiency information for integral horsepower machines; the 20.XX series for large synchronous generators; the 23.XX series for large dc motors; and the 24.XX series for large dc generators. The index is provided to identify and cross-reference individual paragraphs by a topic or keyword.

A

abbreviations, 1.70, 1.80, 4.01–4.03
ac machines
  generators
    definite purpose, Part 18
    large synchronous, Part 22
    small and medium
      application data, Part 14
      definitions, Part 1
      dimensions, Part 11
      ratings, Part 16
    terminal markings, Part 2
  motors
    definite purpose, Part 18
    large induction, Part 20
    large synchronous, Part 21
    small and medium
      application data, Part 14, 14.30–14.44
      definitions, 1.03, 1.05, 1.15–1.18
      dimensions, Part II, 11.30–11.36
      ratings, Part 10, 10.30–10.40
      tests and performance, Part 12
    terminal markings, Part 2
accessories
  external, 2.43
  high-potential tests, 3.01
  internal, 2.43
  mounting dimensions
    ac motors, 11.35
    dc motors, 11.68
  terminal connections, 2.45
adjustable-speed motor, 1.32, 1.34
air conditioning motors, 18.201–18.222
altitude. See service conditions; temperature rise.
ambient temperature, 1.55
  See service conditions; temperature rise.
application
  classification 1.05–1.13
  definite-purpose machines. See Table of Contents for Part 18.
  large machines
    dc generators, 24.80–24.84
    dc motors, 23.80–23.83
    induction motors, 20.80–20.84
    synchronous generators, 22.80–22.86
    synchronous motors, 21.80–21.89
  small and medium machines, Part 14
armature
  form factor, 14.60
  inductance, 23.81
  pulsating current, 21.84
  ripple, 14.62, 23.81
articulated probe, 1.25
asiesmatic, 14.42, 20.83
auxiliary devices. See accessories.
axial centering force, 1.58

B

balance. See also vibration.
  large machines
    dc generators, 24.50
    dc motors, 23.52
    induction motors, 20.53
    synchronous generators, 22.54
    synchronous motors, 21.54, 21.87
  small and medium machines, 12.06, 12.07, 16.52
base speed, 1.33
bearing. See also sheaves.
  currents, 14.65
  losses, 12.09
belts, 14.7. See also sheaves; drives.
blade terminals, 11.05
blower motors
  belted, 18.176–18.189
  shaft-mounted, 18.126–18.141
breakdown torque. See torque.
bus transfer, 20.85, 21.86

C

capacitance, 1.57
capacitor motors. See also Table of Contents for Part 18.
  definitions, 1.17
  rating, 10.32
  schematics, 2.48–2.50, 2.53
carbonator pump motors, 18.726–18.739
chemical pump motors, 18.620
classification, Part 1

Copyright National Electrical Manufacturers Association
Provided by IHS under license with NEMA
No reproduction or networking permitted without license from IHS
Not for Resale

application, 1.05–1.13
complete machines and parts, 1.0–1.1
electrical type, 1.15–1.21
insulation, 1.66
miscellaneous, 1.70–1.80
protection and cooling, 1.25–1.27
rating, performance and test, 1.40–1.58
size, 1.02–1.03
variability, 1.30–1.35
cleanliness test, 18.086, 18.087
clearance holes, 4.04, 11.07
close-coupled pump motors, 18.601–18.614
code letters, 1.70, 10.37
color code, 2.41
commutation, 12.69, 15.42, 23.43, 24.42
compounding, 15.45, 24.84
compound-wound, 1.20, 1.21, 12.70
compressor factors, 21.89
connection diagrams. See terminal markings.
constant-speed motor, 1.30
continuous duty. See time ratings.
coolant pump motors, 18.351–18.364
coupling, 14.38, 20.81, 21.81
crane motors, 18.501–18.520

D

dc machines
generators
definite purpose, Part 18
industrial, Part 15
application data, Part 14
definitions, 1.21, 1.61
dimensions, Part 11
direction of rotation, 2.11, 15.60
large, Part 24
terminal markings, 2.10–2.13
motors
definite purpose, Part 18
large, Part 23
small and medium
application data, Part 14, 14.60, 14.60–14.67
definitions, 1.03, 1.06–1.08, 1.18–1.20
dimensions, Part 11, 11.60–11.68
direction of rotation, 2.11, 14.06
ratings, Part 10, 10.60–10.66
tests and performance, Part 12
terminal markings, 2.10–2.13
deep well pump motors
4-inch, 18.376–18.388
6-inch, 18.401–18.413
8-inch, 18.414–18.424
definite-purpose machines, 1.09, Part 18
definitions, Part 1
delta-connected, 2.62, 2.64
derating factor, 20.56, 21.81
deviation factor, 16.42, 22.42
dielectric
high potential tests, 3.01, 12.03, 12.04
dimensions, Part 4. See also Table of Contents for Part 18.
ac machines, Part 11
face-mounting, 11.34, 11.35
flange-mounting, 11.46
foot-mounted, 11.31–11.33
dc machines, Part 11
base, 11.67
face-mounting, 11.63–11.68
flange-mounting, 11.66
foot-mounted, 11.61, 11.62
small, 11.60
vertical, 11.67
frame designation, 11.01
lettering, 4.01
terminal housings. See terminal housing.
through-bolt mounting, 14.08
direction of rotation. See rotation.
dripproof, 1.25
drives, 20.84, 21.83, 22.86
dryer motors, 18.301–18.314
dual voltage, 2.40, 2.62
dust-ignition-proof, 1.26
dynamic balance. See balance

E

eccentricity of mounting surfaces, 4.07
efficiency
definition, 1.41
large machines
dc generators, 24.44
dc motors, 23.44
induction motors, 20.52
synchronous generators, 22.44
synchronous motors, 21.44
medium machines
ac motors, 12.54, 12.55
dc generators, 15.52
dc motors, 12.74
synchronous generators, 16.44
power factor, 14.43
elevator motors
ac, 18.476–18.487
dc, 18.426–18.436
motor-generator sets, 18.451–18.459
embedded detectors, 20.63, 21.63
encapsulated windings, 1.27, 14.40
enclosed machine, 1.26
end-lay. See coupling.
equalizer leads, 15.61
evaporator fan motors, 18.201–18.222
excitation voltage, 21.14, 22.15, 22.16
exciters, 21.16
explosion-proof, 1.26

F

face-mounting. See dimensions.
face runout, 4.07
fan motors
belted, 18.176–18.189
shaft-mounted, 18.126–18.141
field control, 23.11, 23.12

Copyright National Electrical Manufacturers Association
Provided by IHS under license with NEMA
No reproduction or networking permitted without license from IHS
Not for Resale

field data format. See also test forms.
dc generators, 15.50, 24.46
dc motors, 12.77, 23.49
fixed speed, 1.30
flanges. See also dimensions. See also definite-purpose machines.
Type C, 11.34, 11.63–11.65
Type D, 11.36, 11.66
Type FC, 11.45, 11.68
flat compounding, 15.45, 24.4
fractional-horsepower machines. See small machines.
frame designation, 11.01.
frequency
convertors, 18.551–18.555
large machines
induction motors, 20.13, 20.45, 20.55
synchronous generators, 22.14, 22.81
synchronous motors, 21.12, 21.47, 21.87
Small and medium machines
ac motors, 10.31, 12.44, 14.30
synchronous generators, 16.01
universal motors, 10.31
underfrequency, 14.33, 14.66
variable, 14.31
variations, 12.44, 14.30, 20.45, 21.47
full-load torque. See torque.

G

gasoline pump motors, 18.251–18.266
gear motors, 14.39, 18.001–18.013, 18.026–18.038
gears, 14.07. See also drive.
general industrial motor, 1.07, 23.01
general standards. See Section I.
grounding, 11.06, 16.84, 22.84
guarded machine, 1.25

H

heating. See also temperature.
dc machines
shunfield, 14.64
speed variation, 12.66, 18.434
voltage variation, 15.44
hermetic motors, 18.076–18.093
high-frequency motors, 18.551–18.555
high-potential test, Part 3. See also Table of Contents for Part 18
definitions, 1.56
large machines
dc generators, 24.48
dc motors, 23.51
induction motors, 20.48
synchronous generators, 22.52
synchronous motors, 21.52
small and medium machines, 12.03, 15.48, 16.51
horsepower. See also Table of Contents for Part 18.
large motors
dc, 23.10
induction, 20.10, 20.11
synchronous, 21.10
small and medium motors
ac, 10.32–10.35
dc, 10.62

I

impedance protection, 10.39.2.h
induction motor, 1.15. See also ac motors.
industrial. See Table of Contents for Part 18.
instrument motors, 18.001-18.013
insulation classification, 1.65, 1.66
See also efficiency.
See also heating.
See also temperature.
See also temperature rise.
integral-horsepower machines. See medium machines.
IP, 5.03

J

jet pump motors, 18.326-18.341

K

keyseats, 4.05, 4.06. See also dimensions; Table of Contents for Part 18.
kilowatt ratings
dc generators, 15.10, 24.10
synchronous generators, 16.11, 22.11
synchronous motors, 21.16
knockout diameters, 4.04, 11.07
kVA, 1.70, 10.36, 16.11, 22.11

L

labeling. See nameplate markings.
large machines. See Section III.
laundry motors, 18.301–18.314
lettering, 1.80, 4.01, 11.02. See also nameplate markings.
load. See also overload.
capacity, large machines
dc motors, 23.42
current, large machines
dc generators, 24.81
dc motors, 23.83
short-time, 10.36
Wk, large machines
induction, 20.42
synchronous, 21.42
locked-rotor current
definition, 1.54
small and medium machines, 12.33–12.36
locked-rotor torque. See torque.

Copyright National Electrical Manufacturers Association
Provided by IHS under license with NEMA
No reproduction or networking permitted without license from IHS
Not for Resale

M

machine-tool motors, 18.526–18.531
magnetic pull, 1.58
marking. See abbreviations. See nameplate marking. See terminal marking.
medium machines. See Section II.
mill motors, 21.88, 23.02, 23.03
motor-generator sets, 2.03, 18.451–18.459
mounting, Part 4. See also Table of Contents for Part 18; dimensions.
multispeed motor, 1.35

N

nameplate markings. See Table of Contents for Part 18.
  large machines
    dc generators, 24.61
    dc motors, 24.60
    induction, 20.60
    synchronous generators, 22.61
    synchronous motors, 21.61
  small and medium machines
    ac motors, 10.37–10.40
    dc generators, 15.11, 15.12
    dc motors, 10.63–10.66
    synchronous generators, 16.61
noise. See sound.

O

oil burner motors, 18.276–18.290
open machine, 1.25
oscillation, 21.87
overload. See also service factor.
  dc generators, 15.43, 24.41
  dc motors, 12.69, 23.41
  synchronous generators, 16.41, 22.41
overspeed. See also speed.
  large machines
    dc generators, 24.45
    dc motors, 23.47
    induction motors, 20.44
    synchronous generators, 22.47
    synchronous motors, 21.45
  small and medium machines
    ac motors, 12.48
    dc generators, 15.47
    dc motors, 12.70
    synchronous generators, 16.46
overtemperature, 1.73

P

parallel operation, 16.80, 22.80, 24.82, 24.83
part-winding-start motor, 1.15, 14.37
performance. See tests; ac machines; dc machines.
permanent-magnet generator, 18.626–18.640
permanent-split capacitor motor. See capacitor motors.
phase-sequence, 2.21, 2.22, 2.25
phasors, 2.23
polarity, 2.25
polyphase motors, 1.16. See also ac motors.
power factor
  correction, 30.02.2.10, 31.40.3.4
  definition, 1.42
  large synchronous motors, 21.11, 21.46
  small and medium motors, 14.43
power supply, 10.61, 12.74
probes, 1.25
protection and cooling, 1.25–1.27, 1.71–1.73
pulleys, 14.07. See also sheaves.
pull-in torque, pull-out torque; pull-up torque. See torque.
pulsation. See also ripple.
  armature current, 21.84
  stator current, 20.82
  torque, 21.85
pump motors. See Table of Contents for Part 18.

R

ratings. See ac machines; dc machines
reciprocating machinery, 21.87
reclosing, 20.85, 21.86
rectified ac. See ripple.
referenced standards, 1.01
refrigeration motors, 18.076–18.093, 18.201–18.222
regulation. See voltage; speed
repulsion motors, 1.17, 2.52
resistance-start motor, 1.17
reverse rotation. See rotation.
reversing mill motors, 23.03, 23.45
ripple
  large dc machines
    rectified ac, 23.81, 24.83
  small and medium dc machines
    rectified ac, 14.60–14.62, 14.66
    test power, 12.62
rodent protection, 14.09
rotation. See also terminal markings; Table of Contents for Part 18.
  ac machines, 2.03, 2.24
  dc machines, 2.03, 2.11, 2.24, 14.06
  phasors, 2.23
  reverse, 2.11, 2.25
rotor float. See coupling.
routine tests. See tests.

S

safety warning, 3.01, 14.43
schematic diagrams. See terminal markings.
sealed windings, 1.27 14.40, 20.49
secondary data, 10.35
secondary voltage, 1.46
series-wound motor, 1.15, 1.18, 1.20
service conditions
  large machines
    dc generators, 24.80

Copyright National Electrical Manufacturers Association
Provided by IHS under license with NEMA
No reproduction or networking permitted without license from IHS
Not for Resale

dc motors, 23.80
induction motors, 20.80
synchronous generators, 22.83
synchronous motors, 21.80
small and medium machines, 14.02–14.04, 16.83
service factor, 1.43
large machines
induction motors, 20.14
small and medium machines, 12.47, 14.04, 14.36
synchronous motors, 21.15
servo motors, 18.026–18.038
shaded-pole motor. See capacitor motors.
shaft extensions, 4.05–4.07. See also dimensions.
sheaves
application, 14.07
dimensions
ac motors, 14.41
dc motors, 14.67
shell-type motors, 18–526-18.531
short-circuit, 16.45, 22.45, 22.46
shunt-wound machines, 1.20, 1.21, 12.70
single-phase motor, 1.17
size, classification, 1.02, 1.03
slip, 1.61.6, 14.30.4, 14.33.1, 14.34.3
small motors
application data, Part 14; definite purpose, Part 18
definition, 1.02, 1.05, 1.06
dimensions, Part 11
ratings, Part 10
terminal markings, Part 2
tests and performance, Part 12
sound, 30.02.2.7, 31.40.5.2
large machines, 20.50, 21.53, 22.53
small and medium machines, 12.49, 12.78, 16.86
sparking. See commutation.
speed. See also overspeed. See also Table of Contents for Part 18.
base, 1.33, 14.63
classifications, 1.30–1.35, 1.44
definite-purpose machines, Part 18
large machines
dc generators, 24.10
dc motors, 23.10, 23.12, 23.46, 23.82
induction motors, 20.10
regulation, 1.44, 23.54
synchronous generators, 22.12
synchronous motors, 21.10
terminal markings, part 2
variation, 12.46, 12.65–12.67
small and medium machines
ac motors, 10.32, 14.39
dc generators, 15.10
dc motors, 10.62, 14.63
splash-proof, 1.25
split-capacitor motor. See capacitor motors.
split-phase motor, 1.17, 2.47
sprockets, 14.07
squirrel-cage motors, 1.16, 1.17. See also ac motors.
stability, 12.75
standards, referenced, 1.01
stand-by-generator, 16.85, 22.85
start, part-winding, 1.15, 1.74, 14.37
starts, 12.50, 20.43, 21.43
static torque. See torque.
submergence test, 20.49
submersible motors, 18.376–18.424
sump pump motors. See Table of Contents for Part 18.
surge test, 12.05
symbols. See abbreviations.
synchronous machines. See also Table of Contents for Part 18.
definition, 1.15, 1.60
general purpose, Part 16
large generators, Part 22
large motors, Part 21

T

tachometer generators, 18.626–18.640
telephone influence factor, 16.43, 22.43
temperature. See also insulation classification; serviceconditions.
ambient, 1.55
embedded detectors, 20.63, 21.63
overtemperature, 1.73
overtemperature protection, 12.53, 12.76
ratings
ac small and universal motors, 10.38
dc generators, 15.11
dc motors, 10.65
tests, 1.54
thermal protection, 1.72, 12.52, 12.53
temperature rise. See also service factor; Table of Contents for Part 18; insulation classification.
large machines
dc generators, 24.40
dc motors, 23.40
induction motors, 20.40
synchronous generators, 22.40
synchronous motors, 21.40
small and medium machines
ac motors, 12.42, 12.43, 14.04
dc generators, 15.41
dc motors, 12.63, 14.04
synchronous generators, 16.40
universal motors, 12.42
terminal connections, 11.05
terminal housing
dimensions for small and medium ac and dc motors, 11.03, 11.06
induction motors, 20.62
knockout diameters and clearance holes, 4.04, 11.07
location, 4.02
synchronous generators, 22.63
synchronous motors, 21.62
terminal markings, Part 2. See also Table of Contents for Part 18.
ac machines, 2.20–2.25
generators and synchronous motors, 2.30
polyphase induction, 2.60–2.66
single-phase, 2.40–2.46
color, 2.41
dc machines, 2.10–2.13
direction and rotation, 2.03
location, 2.01
markings, 2.02
schematic diagrams, 2.47–2.52
universal motors, 2.51
windings, 2.60–2.65
test forms. See also field data forms.
large machines

Copyright National Electrical Manufacturers Association
Provided by IHS under license with NEMA
No reproduction or networking permitted without license from IHS
Not for Resale

induction, 20.51
synchronous, 21.49, 21.50, 22.49, 22.50
small and medium machines 12.56, 12.73, 15.51
synchronous generators, 16.49
tests. See also Table of Contents for Part 18.
high-potential, 3.01
large machines
dc generators, 24.40–24.50
dc motors, 23.40–23.54
induction motors, 20.40–20.56
synchronous generators, 22.40–22.54
synchronous motors, 21.40–21.54
small and medium machines, Part 12
ac motors, 12.30–12.56
dc generators, 15.40–15.52
dc motors, 12.61–12.78
synchronous generators, 16.48–16.52
thermal protection. See temperature.
thermal protector
definition, 12.57
hermetic motors, 18.092
through-bolt mounting, 14.08
thrust capacity, 18.386, 18.411, 18.423
time constants, 1.59
time ratings
definition, 1.40
large machines
dc motors, 23.45
induction, 20.05
small and medium machines
ac motors, 10.36
dc generators, 15.11
dc motors, 10.63, 10.64, 12.63
tolerances, 4.05–4.08. See also dimensions.
large induction motors, 20.61
torque. See also Table of Contents for Part 18.
breakdown
large motors
induction, 20.41, 20.56.3
small and medium motors, 12.32, 12.37, 12.39, 12.41, 14.33.2, 14.35.3
constant, 10.33
definitions, 1.47–1.52
locked-rotor
large motors
induction, 20.41, 20.56.3
synchronous 21.85, 21.88
small and medium motors, 10.37, 12.32, 12.52, 14.33.2, 14.35.3
motors, 18.651–18.653
pull-in and pull-out
large synchronous motors, 21.41, 21.85, 21.88
pull-up
large motors
induction, 20.41
small and medium motors, 12.32, 12.40
pulsation, 21.85, 21.87
torque motors, 18.651–18.652
variable, 10.33
torsional vibration, 16.82, 22.82
totally-enclosed machines, 1.26
transient voltage, 16.48
trip current, 12.52
turbine pump motors, 18.590–18.591

U

unbalance. See voltage.
underfrequency, 14.33
universal motors
definition, 1.18
direction of rotation, 14.06
frequencies, 10.31
high-potential test, 12.03
parts, 18.051–18.061
ratings, 10.32.5
schematic, 2.51
shaft extensions, 11.30
temperature rise, 12.42.2

V

v-belt. See sheaves.
variation. See voltage; frequency; speed.
varying speed motor, 1.31
velocity. See speed.
vertical motors, 11.67. See also ac machines; dc machines.
vertical turbine pump motors, 18.590-18.591
vibration, 16.82, 20.54, 21.87, 22.82, 23.53. See also balance.
voltage
boost 30.04.2–30.04.8
deviation factor, 22.42
dip, 16.48
excitation, 21.14, 22.15, 22.16
high potential, 3.01
overvoltage, 14.32
ratings
definite-purpose machines, Part 18
large machines
dc generators, 24.10
dc motors, 23.10
induction motors, 20.12
synchronous generators, 22.13
synchronous motors, 21.12
small and medium machines
ac motors, 10.30
dc generators, 15.10
dc motors, 10.62
regulation, 1.45, 15.46, 16.48, 24.49
tests. See tests.
unbalance, 12.45, 14.35, 20.56, 21.81
undervoltage, 14.34, 24.43
variable, 14.31, 20.46
variation. See also heating.
large machines
dc motors, 23.48
induction motors, 20.45
synchronous generators, 22.48
synchronous motors, 21.47
small and medium machines
ac motors, 12.44, 14.30
dc generators, 15.44
dc motors, 12.67
synchronous generators, 16.47

Copyright National Electrical Manufacturers Association
Provided by IHS under license with NEMA
No reproduction or networking permitted without license from IHS
Not for Resale

W

warnings, 3.01, 14.43
water-cooled, 1.26
water-proof, 1.26
weather-protected, 1.25
winding. See also terminal markings.
  application, 14.40
  encapsulated, 1.27
  part-winding-start, 1.15, 14.37
  sealed, 1.27, 20.49
  temperature, 12.52, 12.53
wiring diagrams. See terminal markings.
Wk. See load.
woodworking motors, 18.526–18.531
wound-rotor, 1.15, 12.41. See also ac motors.

Y

Y-connected, 2.61, 2.62, 2.64

Copyright National Electrical Manufacturers Association
Provided by IHS under license with NEMA
No reproduction or networking permitted without license from IHS
Not for Resale

NEMA STANDARDIZIATION BACKGROUND

The purpose of NEMA standards, their classification, and status are set forth in certain clauses of the NEMA *Standardization Policies and Procedures* manual and are referenced below:

Purpose of Standards

National Electrical Manufacturers Association Standards are adopted in the public interest and are designed to eliminate misunderstandings between the manufacturer and the purchaser and to assist the purchaser in selecting and obtaining the proper product for their particular needs. Existence of a National Electrical Manufacturers Association Standard does not in any respect preclude any member or nonmember from manufacturing or selling products not conforming to the standard.

Definition of a Standard

A standard of the National Electrical Manufacturers Association defines a product, process, or procedure with reference to one or more of the following: nomenclature, composition, dimensions, tolerances, safety, operating characteristics, performance, rating, testing, and the service for which they are designed.

(Standardization Policies and Procedures, p. 1)

Dimensions

Where dimensions are given for interchangeability purposes, alternate dimensions satisfying the other provisions of the Standards Publication may be capable of otherwise equivalent performance.

(Standardization Policies and Procedures, p. 6)

Categories of Standards

National Electrical Manufacturers Association Standards are of three classes, which have received the affirmative vote of at least two-thirds of the Subdivision votes cast in the affirmative or negative:

1. NEMA Standard, which relates to a product, process, or procedure commercially standardized and subject to repetitive manufacture.
2. Suggested Standard for Future Design, which may not have been regularly applied to a commercial product, but which suggests a sound engineering approach to future development.
3. Adoptive Standard, which is adopted in whole or in part from the standards of another organization, either domestic, regional, or international.

(Standardization Policies and Procedures, pp. 5)

Authorized Engineering Information

Authorized Engineering Information consists of explanatory data and other engineering information of an informative character not falling within the classification of NEMA Standard or Suggested Standard for Future Design, which standard has received the affirmative vote of at least two-thirds of the Subdivision votes cast in the affirmative or negative.

(Standardization Policies and Procedures, pp. 5)

Identification of Status

Standards in NEMA Standards Publications are identified as "NEMA Standard," "Suggested Standard for Future Design," or "Adoptive Standard." These indicate the status of the standard. A statement incorporating the auxiliary verb "shall" indicates that compliance with a requirement is mandatory for compliance with the standard. These classes of standards are identified in the foreword or throughout the text.

The material identified as "Authorized Engineering Information" is designated similarly. Statements incorporating other auxiliary verbs such as "should," "may," etc. refer to the authorized engineering information and not to procedures required for compliance with the standard.

Copyright National Electrical Manufacturers Association
Provided by IHS under license with NEMA
No reproduction or networking permitted without license from IHS
Not for Resale

MOTOR AND GENERATOR SECTION
OF THE
NATIONAL ELECTRICAL MANUFACTURERS ASOCIATION

MEMBER COMPANIES

Allen Bradley Company
Milwaukee, WI 53204

Ametek, Incorporated
Lamb Electric Division
Kent, OH 44240

Baldor Electric Company
Fort Smith, AR 72902

Bodine Electric Company
Chicago, IL 60618

Danaher Controls
Gurnee, IL 60031

Eaton Corporation
Kenosha, WI 53141

Electra Gear
Division of Regal-Beloit
Anaheim, CA 92801

Electric Machinery
Dresser-Rand
Minneapolis, MN 55413

Emerson Electric Company
U. S. Electrical Motors Division
St. Louis, MO 63136

General Dynamics
Electro Dynamic
Avenel, NJ 07001

GE Motors
Fort Wayne, IN 46801-2205

Gettys Corporation
Racine, WI 53404

Harnischfeger Corporation
Milwaukee, WI 53215

Howell Electric Motors
Division of SFM Corporation
Plainfield, NJ 07601

Ideal Electric Company
Mansfield, OH 44903

The Imperial Electric Company
Akron, OH 44309

The Lincoln Electric Company
Cleveland, OH 44117-1199

MagneTek, Inc.
Medium AC Motor Business
St. Louis, MO 63017

MagneTek Indiana General
El Paso, TX 79935

Marathon Electric Mfg.
Corporation
Wausau, WI 54402-8003

Micro Mo Electronics, Inc.
St. Petersburg, FL 33701

Onan Corporation
Minneapolis, MN 55432

Peerless-Winsmith, Inc.
Warren, OH 44485-2797

Pittman,
A Division of Penn Engineering &
Manufacturing Corp.
Harleysville, PA 19438

Reliance Electric Company
Cleveland, OH 44124-8020

Rexroth Corporation
Indramat Division
Wood Dale, IL 60191

Siemens Energy & Automation,
Inc.
Norwood, OH 45212

Sterling Electric, Inc.
Santa Ana, CA 92799-5070

The Superior Electric Company
Bristol, CT 06010

Toshiba International Corporation
Houston, TX 77041

Westinghouse Motor Company
Round Rock, TX 78680-0277

Copyright National Electrical Manufacturers Association
Provided by IHS under license with NEMA
No reproduction or networking permitted without license from IHS
Not for Resale