9009279 0003288 9T6

ANSI/NEMA STANDARDS PUBLICATION/NO. MG 1-1978 (R 1981)

ANSI Approval Dates:
Base document—May 2, 1978
ANSI/NEMA Rev. 1—August 8, 1980
ANSI/NEMA Rev. 2—March 23, 1981
ANSI/NEMA Rev. 3—May 22, 1981
ANSI/NEMA Rev. 4—July, 1982
ANSI/NEMA Rev. 5—July, 1982

Includes: ANSI/NEMA Rev. No. 1—November 1978
ANSI/NEMA Rev. No. 2—May 1979
ANSI/NEMA Rev. No. 3—February 1980
ANSI/NEMA Rev. No. 4—June 1980
ANSI/NEMA Rev. 5—December 1980*
NEMA Rev. No. 6—June 1981*
NEMA Rev. No. 7—July 1982*
NEMA Rev. No. 8—November 1984*

*Not yet approved by ANSI

nema

Motors and Generators

NEMA

NATIONAL ELECTRICAL MANUFACTURERS ASSOCIATION ● 2101 L STREET, N.W., WASHINGTON, D.C. 20037

Copyright National Electrical Manufacturers Association
Provided by IHS under license with NEMA
No reproduction or networking permitted without license from IHS

Not for Resale

9009279 0003289 832

© 1985 by National Electrical Manufacturers Association

Copyright National Electrical Manufacturers Association
Provided by IHS under license with NEMA
No reproduction or networking permitted without license from IHS

Not for Resale

KEEP THIS SHEET INSIDE THE FRONT COVER OF YOUR BOOK

The following checklist shows the latest dates of the pages now comprising the *American National Standard for Motors and Generators,* ANSI/NEMA Standards Publication No. MG 1-1978 (R 1981). Only those pages dated June 1981, July 1982, and November 1984 have not yet been approved by ANSI.

Part	Page	Date
Introduction	Pages i through viii	undated
Part 1	1 and 2	November 1978, July 1982
	3 and 4	June 1978, June 1980
	5 and 6	June 1978, December 1980, July 1982, November 1984
	7 and 8	June 1978, November 1984
	9 and 10	June 1978, June 1980, December 1980
	11 and 12	June 1978, June 1980, December 1980, November 1984
	12A*	November 1984
	13	June 1980
Part 2	1 through 6	June 1978, June 1980
	7 through 22	June 1978
	23 and 24	November 1978†
	25	June 1978
Part 3	1 and 2	May 1979, June 1980
Part 4	1 and 2	May 1979
	3 and 4	May 1979, June 1980
	5 and 6	June 1978, June 1980, November 1984
	7 and 8	June 1978, June 1980, December 1980
	9 and 10	May 1979, December 1980
	11 and 12	May 1979, June 1980, June 1981
	13	November 1978
Part 10—ac	1 through 4	November 1978
	5 and 6	May 1979, December 1980, June 1981
	7 and 8	June 1978, December 1980
dc	9 and 10	November 1978
	11 and 12	November 1978, June 1981
	13	June 1978, June 1980
Part 11—ac & dc	1 through 4	June 1978, July 1982, November 1984
ac	5 and 6	June 1978, November 1984
	7 and 8	May 1979, November 1984
	9 and 10	November 1978, November 1984
	11*	June 1978
dc	13 through 16	June 1978, November 1984
	17 and 18	June 1978, July 1982, November 1984
	19 and 20	November 1978
	21 and 22	May 1979, July 1982
	23	Please delete page by drawing a line through the copy
	24	November 1978
Part 12—ac & dc	1 and 2	June 1978, June 1980, November 1984
	3*	June 1978
ac	5 through 10	November 1978
	11 and 12	November 1978, July 1982
	13 and 14	May 1979, June 1980
	14A*	November 1978, July 1982
	15 and 16	November 1978
	17 and 18	February 1980, July 1982, November 1984
	19 and 20	February 1980, June 1980‡, July 1982
	20A and 20B	July 1982
dc	21 and 22	November 1978
	23 and 24	June 1978, July 1982
	25 and 26	November 1978, June 1980, July 1982
	27 and 28	November 1978, June 1980
	29 and 30	June 1978
Part 14—ac & dc	1 and 2	May 1979
	3*	June 1978
ac	5 and 6	November 1978, June 1980, November 1984
	7 and 8	November 1978, November 1984
	9 and 10	November 1978, July 1982
dc	11 through 14	May 1979

(Continued)

†This is a single sheet.

*Succeeding page is blank.

‡June 1980 sheet consists of page 19 only, with blank backup.

Copyright National Electrical Manufacturers Association
Provided by IHS under license with NEMA
No reproduction or networking permitted without license from IHS
Not for Resale

NOVEMBER 1984

Part	Page	Date
Part 15	1 and 2	November 1978, July 1982
	3 and 4	June 1978, July 1982
	5	June 1978
Part 16	1 and 2	July 1982
	3 and 4	July 1982, November 1984
	5 through 10	July 1982
Part 18	Table of Contents for Part 18*	undated
	1 and 2	June 1978, June 1981
	3 through 16	June 1978
	17 and 18	June 1978, July 1982
	19 through 30	June 1978
	31 and 32	June 1978, June 1980
	33 through 42	June 1978
	43 and 44	June 1978, November 1984
	45 through 50	June 1978
	51 and 52	June 1978, July 1982
	53 and 54	June 1978
	55 and 56	June 1978, November 1984
	57 and 58	June 1978
	59 through 62	June 1978, November 1984
	63 through 66	June 1978, July 1982
	67 and 68	May 1979, June 1980
	69 and 70	June 1978
	71 and 72	May 1979, June 1980
	73 and 74	May 1979
	75 and 76	June 1978
	77 through 82	May 1979
	83 through 86	June 1978
	87 through 90	May 1979
	91 through 94	June 1978
	95 through 97	June 1978, June 1980
Part 20	1 and 2	November 1978, December 1980, June 1981
	3 and 4	June 1978, June 1980, June 1981, November 1984
	5 and 6	June 1978, June 1980, December 1980, June 1981, July 1982, November 1984
	6A*	November 1984
	7 and 8	November 1978, June 1980, December 1980, November 1984
	8A	June 1980, December 1980, November 1984
	8B	November 1984
	9 and 10	June 1978, December 1980, June 1981, July 1982, November 1984
	11	December 1980, July 1982, November 1984
Part 21	1 and 2	November 1978, June 1981, November 1984
	3 and 4	June 1978
	5 and 6	June 1978, December 1980, November 1984
	7 and 8	June 1978, November 1984
	9 and 10	June 1978
	11 and 12	June 1978, June 1981, November 1984
	13 and 14	June 1978
	15 and 16	June 1978, December 1980, June 1981, November 1984
	16A and 16B	November 1984
	17 and 18	June 1978, December 1980, July 1982, November 1984
	18A*	November 1984
	19 through 32	June 1978
Part 22	1 and 2	November 1978, June 1981, July 1982
	3 and 4	June 1978, June 1980, December 1980, November 1984
	5 and 6	June 1978, December 1980
	7 and 8	November 1978, December 1980, November 1984
	9 and 10	June 1978, June 1981
Part 23	1 and 2	May 1979, July 1982, November 1984
	3 and 4	November 1978
	5 and 6	June 1978
	7 and 8	November 1978
	9 and 10	June 1978, November 1984
	11 and 12	June 1978
Part 24	1 and 2	November 1978
	3 and 4	June 1978, November 1984
	5 and 6	June 1978, December 1980
Index	1 through 6	December 1980, July 1982, November 1984

Copyright National Electrical Manufacturers Association
Provided by IHS under license with NEMA
No reproduction or networking permitted without license from IHS
Not for Resale

9009279 0003292 327

Pub. No. MG 1-1978 (R 1981)

ANSI/NEMA STANDARDS PUBLICATION

MOTORS AND GENERATORS

(This book supersedes Publication No. MG 1-1972.)

This entire Standards Publication was approved by the American National Standards Institute on May 2, 1978, as *ANSI/NEMA Standards Publication for Motors and Generators,* MG 1-1978.

Copies are available from:

Orders Department
National Electrical Manufacturers Association
2101 L Street, N.W.
Washington, D.C. 20037

—and from—

American National Standards Institute, Inc.
1430 Broadway
New York, N.Y. 10018

Printed in U.S.A.

Copyright National Electrical Manufacturers Association
Provided by IHS under license with NEMA
No reproduction or networking permitted without license from IHS

Not for Resale

9009279 0003293 263

HISTORY OF NEMA

The first trade association in the electrical manufacturing industry started in 1905 with the Electrical Manufacturers Alliance, which changed its name immediately to Electrical Manufacturers Club. In 1908, the American Association of Electric Motor Manufacturers was formed, which changed its name to Electric Power Club in 1910 and which changed its scope to include generators as well as motors and, later, to include other forms of electrical apparatus. Early in its career, the Electric Power Club became active in standardization.

In 1915, the Associated Manufacturers of Electrical Supplies came into existence. One of its stated purposes was "to promote the standardization of electrical material." Its scope covered devices and materials entering into electrical construction work. In 1916, the Electrical Manufacturers Council, consisting of representatives of each of the three organizations mentioned above, was formed.

In 1926, the Electric Power Club and the Associated Manufacturers of Electrical Supplies were merged into the National Electrical Manufacturers Association, and the Electrical Manufacturers Council was dissolved. One of the stated objectives of the new organization reads: "To promote the standardization of electrical apparatus and supplies."

NEMA is the National Electrical Manufacturers Association, a nonprofit trade association of manufacturers of electrical apparatus and supplies. It is engaged in standardization to facilitate understanding between the manufacturers and users of electrical products.

NEMA is divided into numerous subdivisions, each covering a group of related apparatus or supplies. Each such subdivision carries on a definite program of standardization along with its numerous other activities.

* * *

NEMA STANDARDS PUBLICATIONS

Please consult NEMA Headquarters for further information concerning NEMA Standards Publications.

Copyright National Electrical Manufacturers Association
Provided by IHS under license with NEMA
No reproduction or networking permitted without license from IHS
Not for Resale

9009279 0003294 1TT

FOREWORD

THE standards appearing in this publication have been developed by the Motor and Generator Section and approved for publication as Standards of the National Electrical Manufacturers Association. They are intended to assist users in the proper selection and application of motors and generators. These standards are revised periodically to provide for changes in user needs, advances in technology, and changing economic trends. All persons having experience in the selection, use or manufacture of electric motors and generators are encouraged to submit recommendations that will improve the usefulness of these standards.

The standards represent the best judgment of the Motor and Generator Section on the performance and construction of motors and generators. They are based upon sound engineering principles, research, and records of tests and field experience. Also involved is an appreciation of the problems of manufacture, installation, and use derived from consultation with and information obtained from manufacturers, users, inspection authorities, and others having specialized experience. For machines intended for general applications, information as to user needs was determined by the individual companies through normal commercial contact with users. For a motor intended for a definite application, the organization that participated in the development of the standard is listed at the beginning of the definite-purpose motor standard.

The standards are regularly reviewed and are subject to such revision as further experience or investigation may show is necessary or desirable. Prior to publication, the NEMA Standards, Suggested Standards for Future Design and Authorized Engineering Information included herein were reaffirmed by the Motor and Generator Section.

These standards provide practical information concerning performance, safety, test, construction and manufacture of alternating-current and direct-current motors and generators within the product scopes defined in the applicable section or sections of this publication. Although some definite-purpose motors and generators are included, the standards do not apply to machines such as generators and traction motors for railroads, motors for mining locomotives, arc-welding generators, automotive accessory and toy motors and generators, machines mounted on airborne craft, etc.

In the preparation and revision of these standards, consideration has been given to the work of other organizations whose standards are in any way related to motors and generators. Credit is hereby given to all those whose standards may have been helpful in the preparation of this volume.

* * *

Publication No. MG 1-1978 (R 1981) revises and supersedes the NEMA Standards Publication for *Motors and Generators,* Publication No. MG 1-1972. This publication is completely reprinted at approximately 5-year intervals.

Purchasers who wish to receive printed pages of revisions to Publication No. MG 1-1978 (R 1981) as they are issued should fill out and return the postal card which is mailed with each copy of the book. If the address or name of the person who is to receive revisions is changed after you have returned the postal card, please notify the Standards Publication Department of this change and ***be sure to include a listing of any other Standards Publications in your possession which are affected by this change as our mailing are maintained according to publication number.***

Copyright National Electrical Manufacturers Association
Provided by IHS under license with NEMA
No reproduction or networking permitted without license from IHS
Not for Resale

9009279 0003295 036

NEMA STANDARDIZATION

The purpose of NEMA Standards, their classification and status are set forth in certain clauses of the NEMA Bylaws, which are quoted below:

Purpose of Standards

National Electrical Manufacturers Association Standards are adopted in the public interest and are designed to eliminate misunderstandings between the manufacturer and the purchaser and to assist the purchaser in selecting and obtaining the proper product for its particular need. Existence of a National Electrical Manufacturers Association Standard does not in any respect preclude any member or nonmember from manufacturing or selling products not conforming to the standard.

(Bylaw—Art. V, Sec. 1)

Definition of a Standard

A standard of the National Electrical Manufacturers Association defines a product, process or procedure with reference to one or more of the following: nomenclature, composition, construction, dimensions, tolerances, safety, operating characteristics, performance, rating, testing, and the service for which they are designed.

(Bylaw—Art. V, Sec. 2, Subsection A)

Dimensions

Where dimensions are given for interchangeability purposes, alternate dimensions satisfying the other provisions of the standards publication may be capable of otherwise equivalent performance.

(NEMA Policy Memorandum 84-2, dated June 7, 1984)

Classes of Standards

National Electrical Manufacturers Association Standards are of two classes:

1. NEMA Standard, which relates to a product commercially standardized and subject to repetitive manufacture, which standard has been approved by at least 90 percent of the members of the Subdivision eligible to vote thereon;
2. Suggested Standard for Future Design, which may not have been regularly applied to a commercial product, but which suggests a sound engineering approach to future development, which standard has been approved by at least two-thirds of the members of the Subdivision eligible to vote thereon.

(Bylaw—Art. V, Sec. 2, Subsection B)

Authorized Engineering Information

Authorized Engineering Information consists of explanatory data and other engineering information of an informative character not falling within the classification of NEMA Standard or Suggested Standard for Future Design.

(Bylaw—Art. V, Sec. 6, 1st Sentence)

Official Standards Proposal

An Official Standards Proposal is an official draft of a proposed standard which is formally recommended to an outside organization(s) for consideration, comment and/or approval.

(Bylaw—Art. V, Sec. 4, Subsection A)

Identification of Status

Standards in NEMA Standards Publications are identified in the foreword or following each standard as "NEMA Standard" or "Suggested Standard for Future Design." These indicate the status of the standard. These words are followed by a date which indicates when the standard was adopted in its present form by the Association.

The material identified as "Authorized Engineering Information" and "Official Standards Proposal" is designated similarly.

Copyright National Electrical Manufacturers Association
Provided by IHS under license with NEMA
No reproduction or networking permitted without license from IHS
Not for Resale

TABLE OF CONTENTS—GENERAL

(A detailed Index is given at the back of this publication)

SECTION I. STANDARDS APPLYING TO ALL MACHINES

(Identified by Green Index Tabs)

Part 1 Definitions
Part 2 Terminal Markings
Part 3 High-potential Tests
Part 4 Dimensions, Tolerances and Mounting

SECTION II. FRACTIONAL- AND INTEGRAL-HORSEPOWER MACHINES

(Identified by Yellow Index Tabs)

Part 10 Ratings (in two parts)
AC Fractional- and Integral-horsepower Motors
DC Fractional- and Integral-horsepower Motors

Part 11 Dimensions (in three parts)
AC and DC Fractional- and Integral-horsepower Motors and Generators
AC Fractional- and Integral-horsepower Motors and Generators
DC Fractional- and Integral-horsepower Motors and Generators

Part 12 Tests and Performance (in three parts)
AC and DC Fractional- and Integral-horsepower Motors and Generators
AC Fractional- and Integral-horsepower Motors
DC Fractional- and Integral-horsepower Motors

Part 14 Application Data (in three parts)
AC and DC Fractional- and Integral-horsepower Motors and Generators
AC Fractional- and Integral-horsepower Motors and Generators
DC Fractional- and Integral-horsepower Motors and Generators

Part 15 DC Generators

Part 16 Synchronous Integral-horsepower Motors and Generators

Part 18 Definite-purpose Motors and Generators (a detailed breakdown is given at the beginning of Part 18)

SECTION III. LARGE APPARATUS

(Identified by Orange Index Tabs)

Part 20 Induction Motors

Part 21 Synchronous Motors

Part 22 Synchronous Generators—Salient-pole Type (Exclusive of Generators for Hydraulic-turbine Drive)

Part 23 DC Motors Larger Than 1.25 Horsepower per Rpm, Open Type

Part 24 DC Generators Larger Than 1.0 Kilowatt per Rpm, Open Type

Copyright National Electrical Manufacturers Association
Provided by IHS under license with NEMA
No reproduction or networking permitted without license from IHS
Not for Resale

9009279 0003297 909

REFERENCED STANDARDS

In this book, reference is made to the following publications. Copies are available from the sources indicated.

I

American National Standards Institute
1430 Broadway
New York, NY 10018

B92.1-1970	*Involute Splines and Inspection*
C50.10-1977	*General Requirements for Synchronous Machines*

II

American Society for Testing and Materials
1916 Race Street
Philadelphia, PA 19103

D 149-75	*Test for Dielectric Breakdown Voltage and Dielectric Strength of Electrical Insulating Materials at Commercial Power Frequencies*

III

Edison Electric Institute
1111 19th Street, N.W.
Washington, D.C. 20036

Report 60-68 (1960)	*Telephone Influence Factor of Supply System Voltages and Currents*

IV

Institute of Electrical and Electronics Engineers
345 East 47th Street
New York, NY 10017

Std 1-1969	*General Principles for Temperature Limits in the Rating of Electric Equipment*
ANSI/IEEE Std 43-1974 (R 1979)	*Recommended Practice for Testing Insulation Resistance of Rotating Machinery*
Std 85-1973	*Test Procedure for Airborne Sound Measurements on Rotating Electric Machinery*
Std 100-1977	*Dictionary of Electrical and Electronics Terms*
Std 112-1978	*Test Procedure for Polyphase Induction Motors and Generators*
Std 113-1973	*Test Code for Direct-current Machines*
ANSI/IEEE Std 114-1969	*Test Procedure for Single-phase Induction Motors*
Std 115-1965	*Test Procedure for Synchronous Machines*
ANSI/IEEE Std 117-1974	*Standard Test Procedure for Evaluation of Systems of Insulating Materials for Random-wound AC Electric Machinery*
Std 251-1963 (R 1972)	*Test Procedure for Direct-current Tachometer Generators*
Std 275-1966 (R 1972)	*Test Procedure for Evaluation of Systems of Insulating Materials for AC Electric Machinery Employing Form-wound Preinsulated Stator Coils*
Std 304-1977	*Test Procedure for Evaluation and Classification of Insulation Systems for DC Machines*
ANSI/IEEE Std 429-1972	*Evaluation of Sealed Insulation Systems for AC Electric Machinery Employing Form-wound Stator Coils*

(Continued)

Copyright National Electrical Manufacturers Association
Provided by IHS under license with NEMA
No reproduction or networking permitted without license from IHS
Not for Resale

V

International Organization for Standardization
1, rue de Varembe
1211 Geneva 20
Switzerland

R-1000 *SI Units and Recommendations for the Use of Their Multiplies and of Certain Other Units*

VI

National Electrical Manufacturers Association
2101 L Street, N.W.
Washington, DC 20037

MG 2-1977 *Safety Standard for Construction and Guide for Selection, Installation and Use of Electric Motors and Generators*
MG 3-1974 *Sound Level Prediction for Installed Rotating Electrical Machines*
MG 13-1974 *Frame Assignments for Alternating-current Integral-horsepower Induction Motors*

VII

National Fire Protection Association
470 Atlantic Avenue
Boston, MA 02210

70-78 *National Electrical Code*

Copyright National Electrical Manufacturers Association
Provided by IHS under license with NEMA
No reproduction or networking permitted without license from IHS
Not for Resale

9009279 0003299 781

MOTOR AND GENERATOR SECTION
OF THE
NATIONAL ELECTRICAL MANUFACTURERS ASSOCIATION

MEMBER COMPANIES

Ametek, Inc.
Lamb Electric Division
Kent, OH 44240

Baldor Electric Company
Fort Smith, AR 72902

Bodine Electric Company
Chicago, IL 60618

Century Electric, Inc.
St. Louis, MO 63166

Delco Products
Div. General Motors
Dayton, OH 45401

Doerr Electric Corp.
Cedarburg, WI 53012

Electra Motors Operations
Dresser Industries
Anaheim, CA 92801

Electric Machinery Turbodyne Div.
McGraw Edison Company
Minneapolis, MN 55413

Emerson Electric Company
Industrial Control Div.
Chicago, IL 60647

Emerson Electric Company
U.S. Electrical Motors Div.
Milfor, CT 06406

Franklin Electric Company, Inc.
Bluffton, IN 46714

General Dynamics
Electro Dynamic
Avenel, NJ 07001

General Electric Company
Schenectady, NY 12345

Harnischfeger Corporation
Milwaukee, WI 53201

Hayward Tyler, Inc.
Norwalk, CT 06856

Howell Electric Motors
Plainfield, NJ 07061

Ideal Electric Company
Mansfield, OH 44901

Imperial Electric Company
Akron, OH 44309

Indiana General Motors
Electronic Memories & Magnetics Co.
El Paso, TX 79935

Kohler Company
Kohler, WI 53044

Leeson Electric Corp.
Grafton, WI 53024

The Lincoln Electric Company
Cleveland, OH 44117

Marathon Electric Mfg. Corporation
Wausau, WI 54401

Ohio Electric Motors Division
Magnetics International
Barnardsville, NC 28709

Onan Corporation
Minneapolis, MN 55432

Reliance Electric Company
Cleveland, OH 44117

Siemens-Allis, Inc.
Atlanta, GA 60622

The Sievert Electric Company
Melrose Park, IL 60160

Sterling Electric, Inc.
Santa Ana, CA 92711

Toshiba Internation Corp.
Houston, TX 77041

Westinghouse Electric Corp.
Orlando, FL 32817

Westinghouse Electric Corp.
Large Motor Division
Buffalo, NY 14240

Copyright National Electrical Manufacturers Association
Provided by IHS under license with NEMA
No reproduction or networking permitted without license from IHS
Not for Resale

9009279 0003300 223

SECTION I

STANDARDS APPLYING TO ALL MACHINES

Part 1. Definitions

Copyright National Electrical Manufacturers Association
Provided by IHS under license with NEMA
No reproduction or networking permitted without license from IHS
Not for Resale

Part 1
DEFINITIONS

(For definitions not found in Part 1, refer to IEEE Std 100, Dictionary of Electrical and Electronics Terms.)

CLASSIFICATION ACCORDING TO SIZE

MG 1-1.01 Fractional-horsepower Motor

A fractional-horsepower motor is either (1) a motor built in a frame which has a 2-digit frame number in accordance with par. A of MG 1-11.01 or (2) a motor built in a frame smaller than that frame of an integral-horsepower motor (see MG 1-1.02) which has a continuous rating of 1 horsepower, open construction, at 1700–1800 rpm.

NEMA Standard 10-27-1944, revised 6-24-1949; 11-12-1964.

MG 1-1.02 Integral-horsepower Motor ▲

A. An alternating-current integral-horsepower motor is a motor (1) built in a 3 or 4 digit frame number series in accordance with par. B of MG 1-11.01 (or equivalent for machines without feet) and (2) having a continuous horsepower/speed rating up to and including the following:

Synchronous Speed	Horsepower
3600	500
1800	500
1200	350
900	250
720	200
600	150
514	125

B. A direct-current integral-horsepower motor is a motor (1) built in a 3 or 4 digit frame number series in accordance with par. B of MG 1-11.01 (or equivalent for machines without feet) and (2) having a continuous rating up to and including 1.25 horsepower per rpm.

NEMA Standard 10-29-1937, revised 6-24-1949; 11-12-1964; 5-15-1978; 11-12-1981.

MG 1-1.03 Large Motors ●

A. An alternating-current large motor is a motor having a horsepower/speed rating greater than given in par. A of MG 1-1.02.

B. A direct-current large motor is a motor having a continuous rating greater than 1.25 horsepower per rpm.

NEMA Standard 11-12-1982.

CLASSIFICATION ACCORDING TO APPLICATION

(Some of the definitions in this section apply only to specific types or sizes of machines.)

MG 1-1.05 General-purpose Alternating-current Motor

A general-purpose alternating-current motor is an induction motor, rated 200 horsepower and less, which incorporates all of the following:

1. Is of open construction.
2. Is continuously rated.
3. Has a service factor in accordance with MG 1-12.47.
4. Has a Class A insulation system with a temperature rise as specified in MG 1-12.41 for fractional-horsepower motors or has a Class B insulation system with a temperature rise as specified in MG 1-12.42 for integral-horsepower motors.

It is designed in standard ratings with standard operating characteristics and mechanical construction for use under usual service conditions without restriction to a particular application or type of application.

NEMA Standard 10-29-1937, revised 6-24-1949; 11-12-1964; 11-11-1965.

MG 1-1.05.a General-purpose Direct-Current Fractional-horsepower Motor

A general-purpose direct-current fractional-horsepower motor is a fractional-horsepower motor of mechanical construction suitable for general

▲ Revised.
● Added.

Copyright National Electrical Manufacturers Association
Provided by IHS under license with NEMA
No reproduction or networking permitted without license from IHS
Not for Resale

9009279 0003302 0T6

use under usual service conditions and has ratings, constructional and performance characteristics applying to direct-current fractional-horsepower motors as given in Parts 10, 11, 12 and 14.

NEMA Standard 9-20-1972.

MG 1-1.06 Industrial Direct-current Motor

An industrial direct-current motor is an integral-horsepower motor of mechanical construction suitable for industrial use under usual service conditions and has ratings, constructional and performance characteristics applying to direct-current integral-horsepower motors as given in the standards in Parts 10, 11, 12 and 14.

NEMA Standard 11-11-1954, revised 6-24-1957; 1-21-1964; 8-19-1964; 1-25-1972.

MG 1-1.07 Industrial Direct-current Generator

An industrial direct-current generator is a generator of mechanical construction suitable for industrial use under usual service conditions and has ratings, constructional and performance characteristics applying to direct-current generators as given in the standards in Parts 11 and 15.

NEMA Standard 11-17-1955, revised 6-24-1957; 1-21-1964; 8-19-1964; 1-25-1972.

MG 1-1.08 Definite-purpose Motor

A definite-purpose motor is any motor designed in standard ratings with standard operating characteristics or mechanical construction for use under service conditions other than usual or for use on a particular type of application.

NEMA Standard 6-24-1949.

MG 1-1.09 General Industrial Motors

See MG 1-23.01.

MG 1-1.10 Metal Rolling Mill Motors

See MG 1-23.02.

MG 1-1.11 Reversing Hot Mill Motors

See MG 1-23.03.

MG 1-1.12 Special-purpose Motor

A special-purpose motor is a motor with special operating characteristics or special mechanical construction, or both, designed for a particular application and not falling within the definition of a general-purpose or definite-purpose motor.

NEMA Standard 10-29-1937, revised 6-24-1949, 11-17-1949.

CLASSIFICATION ACCORDING TO ELECTRICAL TYPE

MG 1-1.15 Alternating-current Motors

Alternating-current motors are of three general types—induction, synchronous and series—and are defined as follows:

A. INDUCTION MOTOR

An induction motor is an alternating-current motor in which a primary winding on one member (usually the stator) is connected to the power source and a polyphase secondary winding or a squirrel-cage secondary winding on the other member (usually the rotor) carries induced current.

1. SQUIRREL-CAGE INDUCTION MOTOR—A squirrel-cage induction motor is one in which the secondary circuit consists of a squirrel-cage winding suitably disposed in slots in the secondary core.
2. WOUND-ROTOR INDUCTION MOTOR—A wound-rotor induction motor is an induction motor in which the secondary circuit consists of a polyphase winding or coils whose terminals are either short-circuited or closed through suitable circuits.

B. SYNCHRONOUS MOTOR

A synchronous motor is a synchronous machine which transforms electrical power into mechanical power.

C. PART-WINDING-START MOTOR

A part-winding-start induction or synchronous motor is one arranged for starting by first energizing part of its primary (armature) winding and. subsequently, energizing the remainder of this winding in one or more steps. The purpose is to reduce the initial values of the starting current drawn or the starting torque developed by the motor. A standard part-winding-start induction motor is arranged so that one-half of its primary winding can be energized initially and, subsequently, the remaining half can be energized, both halves then carrying the same current.

D. SERIES-WOUND MOTOR

A series-wound motor is a motor in which the field circuit and armature circuit are connected in series.

NEMA Standard 8-26-1948, revised 6-22-1950; 11-15-1951; 5-17-1955.

Copyright National Electrical Manufacturers Association
Provided by IHS under license with NEMA
No reproduction or networking permitted without license from IHS
Not for Resale

9009279 0003303 T32

MG 1-1.16 Polyphase Motors

Alternating-current polyphase motors are of the squirrel-cage, wound-rotor or synchronous types.

Design Letters of Polyphase Squirrel-cage Integral-horsepower Motors

Polyphase squirrel-cage integral-horsepower induction motors may be one of the following:

Design A

A Design A motor is a squirrel-cage motor designed to withstand full-voltage starting and developing locked-rotor torque as shown in MG 1-12.37, pull-up torque as shown in MG 1-12.39, breakdown torque as shown in MG 1-12.38, with locked-rotor current higher than the values shown in MG 1-12.34 for 60 hertz and MG 1-12.35 for 50 hertz and having a slip at rated load of less than 5 percent.*

*Motors with 10 or more poles may have slip slightly greater than 5 percent.

Design B

A Design B motor is a squirrel-cage motor designed to withstand full-voltage starting, developing locked-rotor, breakdown and pull-up torques adequate for general application as specified in MG 1-12.37, MG 1-12.38 and MG 1-12.39, drawing locked-rotor current not to exceed the values shown in MG 1-12.34 for 60 hertz and MG 1-12.35 for 50 hertz and having a slip at rated load of less than 5 percent.*

*Motors with 10 and more poles may have slip slightly greater than 5 percent.

Design C

A Design C motor is a squirrel-cage motor designed to withstand full-voltage starting, developing locked-rotor torque for special high-torque application up to the values shown in MG 1-12.37, pull-up torque as shown in MG 1-12.39, breakdown torque up to the values shown in MG 1-12.38, with locked-rotor current not to exceed the values shown in MG 1-12.34 for 60 hertz and MG 1-12.35 for 50 hertz and having a slip at rated load of less than 5 percent.

Design D

A Design D motor is a squirrel-cage motor designed to withstand full-voltage starting, developing high locked-rotor torque as shown in MG 1-12.37, with locked-rotor current not greater than shown in MG 1-12.34 for 60 hertz and MG 1-12.35 for 50 hertz and having a slip at rated load of 5 percent or more.

NEMA Standard 8-26-1948, revised 8-20-1966; 7-16-1969; 1-25-1972.

MG 1-1.17 Single-phase Motors

Alternating-current single-phase motors are usually induction or series motors although single-phase synchronous motors are available in the smaller ratings.

Design Letters of Single-phase Fractional-horsepower Motors

Design N

A Design N motor is a single-phase fractional-horsepower motor designed to withstand full-voltage starting and with a locked-rotor current not to exceed the values shown in MG 1-12.32.

Design O

A Design O motor is a single-phase fractional-horsepower motor designed to withstand full-voltage starting and with a locked-rotor current not to exceed the values shown in MG 1-12.32.

Design Letters of Single-phase Integral-horsepower Motors

Single-phase integral-horsepower motors may be one of the following:

Design L

A Design L motor is a single-phase integral-horsepower motor designed to withstand full-voltage starting and to develop a breakdown torque as shown in MG 1-10.33 with a locked-rotor current not to exceed the values shown in MG 1-12.33.

Design M

A Design M motor is a single-phase integral-horsepower motor designed to withstand full-voltage starting and to develop a breakdown torque as shown in MG 1-10.33 with a locked-rotor current not to exceed the values shown in MG 1-12.33.

Single-phase Squirrel-cage Motors

Single-phase squirrel-cage induction motors are classified and defined as follows:

A. Split-phase Motor

A split-phase motor is a single-phase induction motor equipped with an auxiliary winding, displaced in magnetic position from, and connected in parallel with, the main winding.

NOTE—Unless otherwise specified, the auxiliary circuit is assumed to be opened when the motor has attained a predetermined speed. The term "split-phase motor," used without qualification, describes a motor to be used without impedance other than that offered by the motor windings themselves, other types being separately defined.

B. Resistance-start Motor

A resistance-start motor is a form of split-phase motor having a resistance connected in series with the auxiliary winding. The auxiliary circuit is opened when the motor has attained a predetermined speed.

Copyright National Electrical Manufacturers Association
Provided by IHS under license with NEMA
No reproduction or networking permitted without license from IHS

Not for Resale

9009279 0003304 979

C. CAPACITOR MOTOR

A capacitor motor is a single-phase induction motor with a main winding arranged for direct connection to a source of power and an auxiliary winding connected in series with a capacitor. There are three types of capacitor motors, as follows:

1. CAPACITOR-START MOTOR—A capacitor-start motor is a capacitor motor in which the capacitor phase is in the circuit only during the starting period.
2. PERMANENT-SPLIT CAPACITOR MOTOR—A permanent-split capacitor motor is a capacitor motor having the same value of capacitance for both starting and running conditions.
3. TWO-VALUE CAPACITOR MOTOR—A two-value capacitor motor is a capacitor motor using different values of effective capacitance for the starting and running conditions.

D. SHADED-POLE MOTOR

A shaded-pole motor is a single-phase induction motor provided with an auxiliary short-circuited winding or windings displaced in magnetic position from the main winding.

SINGLE-PHASE WOUND-ROTOR MOTORS

Single-phase wound-rotor motors are defined and classified as follows:

E. REPULSION MOTOR

A repulsion motor is a single-phase motor which has a stator winding arranged for connection to a source of power and a rotor winding connected to a commutator. Brushes on the commutator are short-circuited and are so placed that the magnetic axis of the rotor winding is inclined to the magnetic axis of the stator winding. This type of motor has a varying-speed characteristic.

F. REPULSION-START INDUCTION MOTOR

A repulsion-start induction motor is a single-phase motor having the same windings as a repulsion motor, but at a predetermined speed the rotor winding is short-circuited or otherwise connected to give the equivalent of a squirrel-cage winding. This type of motor starts as a repulsion motor but operates as an induction motor with constant-speed characteristics.

G. REPULSION-INDUCTION MOTOR

A repulsion-induction motor is a form of repulsion motor which has a squirrel-cage winding in the rotor in addition to the repulsion motor winding. A motor of this type may have either a constant-speed (see MG 1-1.30) or varying-speed (see MG 1-1.31) characteristic.

NEMA Standard 8-26-1948, revised 5-21-1962.

MG 1-1.18 Universal Motors

A universal motor is a series-wound motor designed to operate at approximately the same speed and output on either direct current or single-phase alternating current of a frequency not greater than 60 hertz and approximately the same rms voltage.

A. SERIES-WOUND MOTOR

A series-wound motor is a commutator motor in which the field circuit and armature circuit are connected in series.

B. COMPENSATED SERIES MOTOR

A compensated series motor is a series motor with a compensating field winding.

NOTE—The compensating field winding and the series field winding may be combined into one field winding.

NEMA Standard 8-26-1948, revised 6-22-1950; 6-28-1951.

MG 1-1.19 Direct-current Motors ▲

Direct-current motors are of four general types—shunt wound, series wound, compound wound, and permanent magnet—and are defined as follows:

A. SHUNT WOUND MOTOR

A shunt-wound motor is either a straight shunt-wound motor or a stabilized shunt-wound motor.

1. *Straight Shunt-wound Motor*—A straight shunt-wound motor is a direct-current motor in which the field circuit is connected either in parallel with the armature circuit or to a separate souce of excitation voltage. The shunt field is the only winding supplying field excitation.

2. *Stabilized Shunt-wound Motor*—A stabilized shunt-wound motor is a direct-current motor in which the shunt field circuit is connected either in parallel with the armature circuit or to a separate source of excitation voltage and which also has a light series winding added to prevent a rise in speed or to obtain a slight reduction in speed with increase in load.

B. SERIES-WOUND MOTOR

A series-wound motor is a motor in which the field circuit and armature circuit are connected in series.

C. COMPOUND-WOUND MOTOR

A compound-wound motor is a direct-current motor which has two separate field windings—one, usually the predominating field, connected as in a straight shunt-wound motor, and the other connected in series with the armature circuit.

D. PERMANENT MAGNET MOTOR

A permanent magnet motor is a direct-current motor in which the field excitation is supplied by permanent magnets.

NEMA Standard 8-26-1948, revised 11-17-1949; 11-15-1951; 11-11-1965; 3-19-1980.

▲ Revised.

Copyright National Electrical Manufacturers Association
Provided by IHS under license with NEMA
No reproduction or networking permitted without license from IHS
Not for Resale

MG 1-1.20 Direct-current Generators

Direct-current generators are of two general types—shunt wound and compound wound—and are defined as follows:

A. SHUNT-WOUND GENERATOR

A shunt-wound generator is a direct-current generator in which the field circuit is connected either in parallel with the armature circuit or to a separate source of excitation voltage.

B. COMPOUND-WOUND GENERATOR

A compound-wound generator is a direct-current generator which has two separate field windings—one, usually the predominating field, connected as in a shunt-wound generator, and the other connected in series with the armature circuit.

NEMA Standard 11-11-1965.

CLASSIFICATION ACCORDING TO ENVIRONMENTAL PROTECTION AND METHODS OF COOLING

MG 1-1.25 Open Machine

An open machine is one having ventilating openings which permit passage of external cooling air over and around the windings of the machine. The term "open machine," when applied to large apparatus without qualification, designates a machine having no restriction to ventilation other than that necessitated by mechanical construction.

A. DRIPPROOF MACHINE

A dripproof machine is an open machine in which the ventilating openings are so constructed that successful operation is not interfered with when drops of liquid or solid particles strike or enter the enclosure at any angle from 0 to 15 degrees downward from the vertical.*

B. SPLASH-PROOF MACHINE

A splash-proof machine is an open machine in which the ventilating openings are so constructed that successful operation is not interfered with when drops of liquid or solid particles strike or enter the enclosure at any angle not greater than 100 degrees downward from the vertical.*

C. SEMI-GUARDED MACHINE

A semi-guarded machine is an open machine in which part of the ventilating openings in the machine, usually in the top half, are guarded as in the case of a "guarded machine" but the others are left open.

D.1 GUARDED MACHINE *(NEMA Standard)*▲

A guarded machine is an open machine in which all openings giving direct access to live metal or rotating parts (except smooth rotating surfaces) are limited in size by the structural parts or by screens, baffles, grilles, expanded metal or other means to prevent accidental contact with hazardous parts. Openings giving direct access to such live or rotating parts shall not permit the passage of a cylindrical rod 0.75 inch in diameter.

The openings in the machine enclosure shall be such that (1) a probe such as that illustrated in Fig. 1-1.1, when inserted through the openings, will not touch an uninsulated live metal part or a hazardous rotating part and (2) a probe such as that illustrated in Fig. 1-1.2, when inserted through the openings, will not touch film-coated wire.▲

NEMA Standard 9-7-1977.

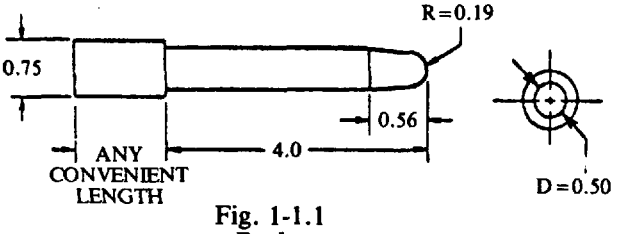

Fig. 1-1.1
Probe

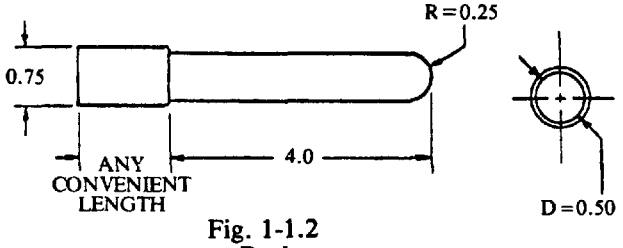

Fig. 1-1.2
Probe

D.2 GUARDED MACHINE (*Suggested Standard for Future Design*)▲

A guarded machine is an open machine in which all openings giving direct access to live metal or rotating parts (except smooth rotating surfaces) are limited in size by the structural parts or by screens, baffles, grilles, expanded metal or other means to prevent accidental contact with hazardous parts. Openings giving direct access to such live or rotating parts shall not permit the passage of a cylindrical rod 0.75 inch in diameter.

The openings in the machine enclosure shall be such that (1) a probe such as that illustrated in Fig. 1-2.1, when inserted through the openings, will not touch a hazardous rotating part, (2) a probe such as that illustrated in Fig. 1-2.2, when inserted through the openings, will not touch film-coated wire, and (3) an articulated probe such as that illustrated in Fig. 1-2.3, when inserted through the openings, will not touch an uninsulated live metal part.▲

Suggested Standards for Future Design 9-3-1980.

* A method for demonstrating successful operation is: (1) by exposing the machine, with the motor at rest, to a spray of water at the specified angle and at a rate no greater than 1 inch per hour for 1 hour, and (2) after exposure, by subjecting the windings to a high-potential test of 50 percent of the normal high-potential test followed by a 15-minute no-load operation at rated voltage.

▲ Editorially revised.

Copyright National Electrical Manufacturers Association
Provided by IHS under license with NEMA
No reproduction or networking permitted without license from IHS
Not for Resale

E. Drippproof Guarded Machine

A drippproof guarded machine is a drippproof machine whose ventilating openings are guarded in accordance with par. D.

F. Open Externally-Ventilated Machine

An open externally-ventilated machine is one which is ventilated by means of a separate motor-driven blower mounted on the machine enclosure. Mechanical protection may be as defined in par. A to E, inclusive. This machine is sometimes known as a blower-ventilated or a forced-ventilated machine.

G. Open Pipe - Ventilated Machine

An open pipe-ventilated machine is an open machine except that openings for the admission of the ventilating air are so arranged that inlet ducts or pipes can be connected to them. Open pipe-ventilated machines may be self-ventilated (air circulated by means integral with the machine) or forced-ventilated (air circulated by means external to and not a part of the machine). Enclosures may be defined in par. A to E, inclusive.

NOTE—See par. F of MG 1-1.26 for definition of totally-enclosed pipe-ventilated machine.

H. Weather-Protected Machine

Type I—A weather-protected Type I machine is an open machine with its ventilating passages so constructed as to minimize the entrance of rain, snow and air-borne particles to the electric parts and having its ventilated openings so constructed as to prevent the passage of a cylindrical rod 0.75 inch in diameter.

Type II—A weather-protected Type II machine shall have, in addition to the enclosure defined for a weather-protected Type I machine, its ventilating passages at both intake and discharge so arranged that high-velocity air and air-borne particles blown into the machine by storms or high winds can be discharged without entering the internal ventilating passages leading directly to the electric parts of the machine itself. The normal path of the ventilating air which enters the electric parts of the machine shall be so arranged by baffling or separate housings as to provide at least three abrupt changes in direction, none of which shall be less than 90 degrees. In addition, an area of low velocity not exceeding 600 feet per minute shall be provided in the intake air path to minimize the possibility of moisture or dirt being carried into the electric parts of the machine.

NEMA Standard 9-7-1977.

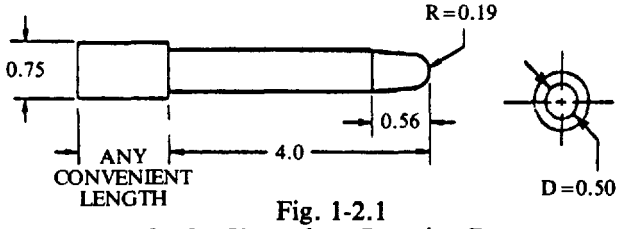

Fig. 1-2.1
Probe for Hazardous Rotating Parts

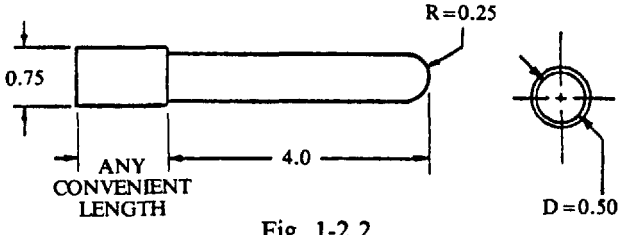

Fig. 1-2.2
Probe for Film-Coated Wire ▲

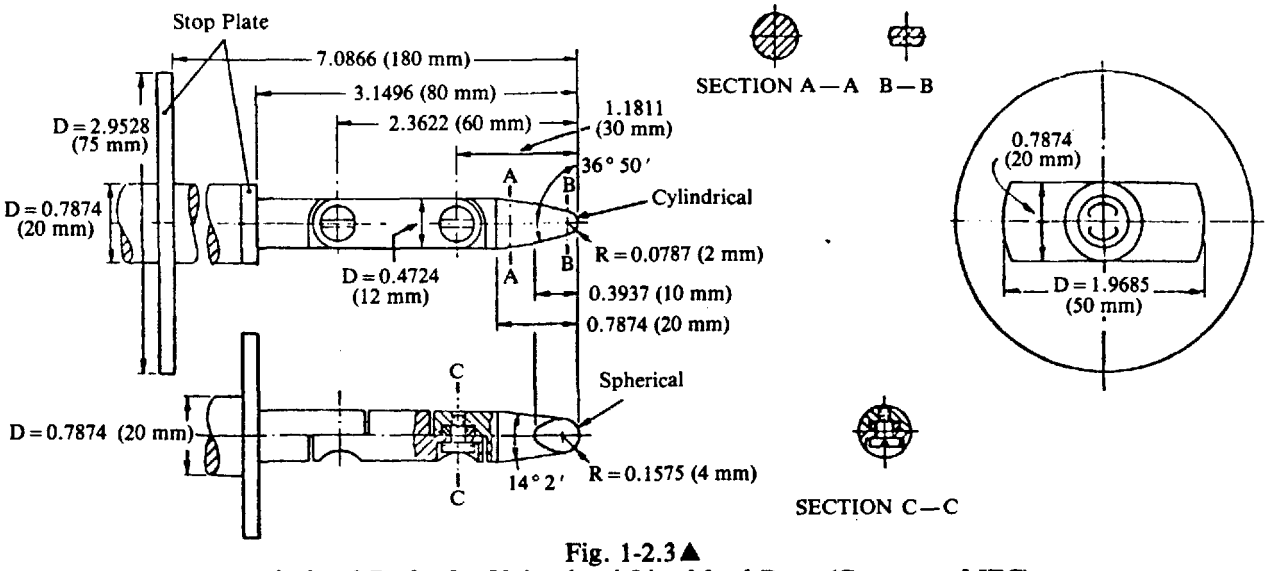

Fig. 1-2.3▲
Articulated Probe for Uninsulated Live Metal Parts (Courtesy of IEC)

▲ Editorially revised.

Copyright National Electrical Manufacturers Association
Provided by IHS under license with NEMA
No reproduction or networking permitted without license from IHS
Not for Resale

9009279 0003307 688

MG 1-1.26 Totally-enclosed Machine

A totally-enclosed machine is one so enclosed as to prevent the free exchange of air between the inside and the outside of the case but not sufficiently enclosed to be termed air-tight.

A. TOTALLY-ENCLOSED NONVENTILATED MACHINE

A totally-enclosed nonventilated machine is a totally-enclosed machine which is not equipped for cooling by means external to the enclosing parts.

B. TOTALLY-ENCLOSED FAN-COOLED MACHINE

A totally-enclosed fan-cooled machine is a totally-enclosed machine equipped for exterior cooling by means of a fan or fans integral with the machine but external to the enclosing parts.

C. EXPLOSION-PROOF MACHINE

An explosion-proof machine is a totally-enclosed machine whose enclosure is designed and constructed to withstand an explosion of a specified gas or vapor which may occur within it and to prevent the ignition of the specified gas or vapor surrounding the machine by sparks, flashes or explosions of the specified gas or vapor which may occur within the machine casing.

NOTE—See *National Electrical Code* Article 500—For Hazardous Locations, Class I, Groups A, B, C or D.

D. DUST-IGNITION-PROOF MACHINE

A dust-ignition-proof machine is a totally-enclosed machine whose enclosure is designed and constructed in a manner which will exclude ignitable amounts of dust or amounts which might affect performance or rating, and which will not permit arcs, sparks, or heat otherwise generated or liberated inside of the enclosure to cause ignition of exterior accumulations or atmospheric suspensions of a specific dust on or in the vicinity of the enclosure.

NOTE I—Successful operation of this type of machine requires avoidance of overheating from such causes as excessive overloads, stalling or accumulation of excessive quantities of dust on the machine.

NOTE II—See *National Electrical Code* Article 500—For Hazardous Locations, Class II, Groups E, F or G.

E. WATER-PROOF MACHINE

A water-proof machine is a totally-enclosed machine so constructed that it will exclude water applied in the form of a stream from a hose, except that leakage may occur around the shaft provided it is prevented from entering the oil reservoir and provision is made for automatically draining the machine. The means for automatic draining may be a check valve or a tapped hole at the lowest part of the frame which will serve for application of a drain pipe.

NOTE—A common form of test for a water-proof machine is to play on the machine a stream of water from a hose with a 1-inch nozzle delivering at least 65 gallons per minute from a distance of about 10 feet, from any direction, for a period of not less than 5 minutes.

F. TOTALLY-ENCLOSED PIPE-VENTILATED MACHINE

A totally-enclosed pipe-ventilated machine is a machine with openings so arranged that when inlet and outlet ducts or pipes are connected to them there is no free exchange of the internal air and the air outside the case. Totally-enclosed pipe-venitlated machines may be self-ventilated (air circulated by means integral with the machine) or forced-ventilated (air circulated by means external to and not a part of the machine).

NOTE—See par. G of MG 1-1.25 for definition of an open pipe-ventilated machine.

G. TOTALLY-ENCLOSED WATER-COOLED MACHINE

A totally-enclosed water-cooled machine is a totally-enclosed machine which is cooled by circulating water, the water or water conductors coming in direct contact with the machine parts.

H. TOTALLY-ENCLOSED WATER-AIR-COOLED MACHINE

A totally-enclosed water-air-cooled machine is a totally-enclosed machine which is cooled by circulating air which, in turn, is cooled by circulating water. It is provided with a water-cooled heat exchanger for cooling the internal air and a fan or fans, integral with the rotor shaft or separate, for circulating the internal air.

I. TOTALLY-ENCLOSED AIR-TO-AIR-COOLED MACHINE

A totally-enclosed air-to-air-cooled machine is a totally-enclosed machine which is cooled by curculating the internal air through a heat exchanger which, in turn, is cooled by circulating external air. It is provided with an air-to-air heat exchanger for cooling the internal air and a fan or fans, integral with the rotor shaft or separate, for circulating the internal air and a separate fan for circulating the external air.

J. TOTALLY-ENCLOSED FAN-COOLED GUARDED MACHINE

A totally-enclosed fan-cooled guarded machine is a totally-enclosed fan-cooled machine in which all openings giving direct access to the fan are limited in size by the design of the structural parts or by screens, grilles, expanded metal, etc., to prevent accidental contact with the fan. Such openings shall not permit the passage of a cylindrical rod 0.75 inch in diameter, and a probe such as that shown in Fig. 1-1 of MG 1-1.25, par. D, shall not contact the blades, spokes or other irregular surfaces of the fan.

K. TOTALLY-ENCLOSED AIR-OVER MACHINE

A totally-enclosed air-over mchine is a totally-enclosed machine intended for exterior cooling by a ventilating means external to the machine.

NEMA Standard 8-26-1948; revised 6-24-1949; 11-17-1949; 6-22-1950; 11-12-1953; 7-21-1954; 11-15-1956; 8-20-1966; 11-6-1975; 9-7-1977.

Copyright National Electrical Manufacturers Association
Provided by IHS under license with NEMA
No reproduction or networking permitted without license from IHS
Not for Resale

MG 1-1.27 Machine with Encapsulated or Sealed Windings ▲

A. MACHINE WITH ENCAPSULATED WINDINGS

A machine with encapsulated windings is an alternating-current squirrel-cage machine having random windings filled with an insulating resin which also forms a protective coating. This type of machine is intended for exposure to more severe environmental conditions than usual varnish treatments can withstand. Other parts of the machine may require protection against such environmental conditions.

NOTE—This machine may have any one of the enclosures described in MG 1-1.25 or MG 1-1.26.

B. MACHINE WITH SEALED WINDINGS

A machine with sealed windings is an alternating-current squirrel-cage machine making use of form-wound coils and having an insulation system which, through the use of materials, processes, or a combination of materials and processes, results in a sealing of the windings and connections against contaminants. This type of machine is intended for exposure to more severe environmental conditions than the usual insulation system can withstand. Other parts of the machine may require protection against such environmental conditions.

Machines of this type shall be capable of passing the tests described in MG 1-20.48.

NOTE—This machine may have any one of the enclosures described in MG 1-1.25 or MG 1-1.26.

NEMA Standard 7-13-1967, revised 5-16-1984.

CLASSIFICATION ACCORDING TO VARIABILITY OF SPEED

MG 1-1.30 Constant-speed Motor

A constant-speed motor is one the speed of normal operation of which is constant or practically constant; for example, a synchronous motor, an induction motor with small slip or a direct-current shunt-wound motor.

NEMA Standard 10-29-1943, revised 8-26-1948.

MG 1-1.31 Varying-speed Motor

A varying-speed motor is one the speed of which varies with the load, ordinarily decreasing when the load increases; such as a series-wound or repulsion motor.

NEMA Standard 10-29-1937, revised 8-26-1948.

MG 1-1.32 Adjustable-speed Motor

An adjustable-speed motor is one the speed of which can be varied gradually over a considerable range, but when once adjusted remains practically unaffected by the load, such as a direct-current shunt-wound motor with field-resistance control designed for a considerable range of speed adjustment.

NEMA Standard 10-29-1937, revised 8-26-1948.

MG 1-1.33 Base Speed of an Adjustable-speed Motor

The base speed of an adjustable-speed motor is the lowest rated speed obtained at rated load and rated voltage at the temperature rise specified in the rating.

NEMA Standard 11-1-1946.

MG 1-1.34 Adjustable Varying-speed Motor

An adjustable varying-speed motor is one the speed of which can be adjusted gradually, but when once adjusted for a given load will vary in considerable degree with change in load; such as a direct-current compound-wound motor adjusted by field control or a wound-rotor induction motor with rheostatic speed control.

NEMA Standard 10-29-1937, revised 8-26-1948.

MG 1-1.35 Multispeed Motor

A multispeed motor is one which can be operated at any one of two or more definite speeds, each being practically independent of the load. For example, a direct-current motor with two armature windings or an induction motor with windings capable of various pole groupings. In the case of multispeed permanent-split capacitor and shaded pole motors, the speeds are dependent upon the load.

NEMA Standard 10-29-1937, revised 5-21-1962.

RATING, PERFORMANCE AND TEST

MG 1-1.40 Rating of a Machine

The rating of a machine shall consist of the output power together with any other characteristics, such as speed, voltage and current, assigned to it by the manufacturer. For machines which are designed for absorbing power, the rating shall be the input power.

A. CONTINUOUS RATING

The continuous rating defines the load which can be carried for an indefinitely long period of time.

B. SHORT-TIME RATING

The short-time rating defines the load which

▲ Revised.

Copyright National Electrical Manufacturers Association
Provided by IHS under license with NEMA
No reproduction or networking permitted without license from IHS
Not for Resale

9009279 0003309 450

can be carried for a short and definitely specified time.

NEMA Standard 10-29-1937, revised 6-24-1949; 3-21-1973.

MG 1-1.41 Efficiency

The efficiency of a motor or generator is the ratio of its useful power output to its total power input and is usually expressed in percentage.

NEMA Standard 6-24-1949.

MG 1-1.42 Power Factor

The power factor of an alternating-current motor or generator is the ratio of the kilowatt input (or output) to the kVA input (or output) and is usually expressed as a percentage.

NEMA Standard 6-24-1949.

MG 1-1.43 Service Factor—Alternating-current Motors

The service factor of an alternating-current motor is a multiplier which, when applied to the rated horsepower, indicates a permissible horsepower loading which may be carried under the conditions specified for the service factor (see MG 1-14.35).

NEMA Standard 10-29-1937, revised 11-12-1964; 7-13-1967.

MG 1-1.43a Speed Regulation of Direct-current Motors

The speed regulation of a direct-current motor is the difference between the steady no-load speed and the steady rated-load speed, expressed in percent of rated-load speed.

NEMA Standard 3-21-1973.

MG 1-1.44 Voltage Regulation of Direct-current Generators

The voltage regulation of a direct-current generator is the final change in voltage with constant field rheostat setting when the specified load is reduced gradually to zero, expressed a percent of rated-load voltage, the speed being kept constant.

NOTE—In practice it is often desirable to specify the overall regulation of the generator and its driving machine, thus taking into account the speed regulation of the driving machine.

NEMA Standard 10-29-1943.

MG 1-1.45 Secondary Voltage of Wound-rotor Motors

The secondary voltage of wound-rotor motors is the open-circuit voltage at standstill, measured across the slip rings, with rated voltage applied on the primary winding.

NEMA Standard 6-7-1922, revised 6-24-1949.

MG 1-1.46 Full-load Torque

The full-load torque of a motor is the torque necessary to produce its rated horsepower at full-load speed. In pounds at a 1-foot radius, it is equal to the horsepower times 5252 divided by the full-load speed.

NEMA Standard 11-1-1940.

MG 1-1.47 Locked-rotor Torque (Static Torque)

The locked-rotor torque of a motor is the minimum torque which it will develop at rest for all angular positions of the rotor, with rated voltage applied at rated frequency.

NEMA Standard 10-29-1943.

MG 1-1.48 Pull-up Torque

The pull-up torque of an alternating-current motor is the minimum torque developed by the motor during the period of acceleration from rest to the speed at which breakdown torque occurs. For motors which do not have a definite breakdown torque, the pull-up torque is the minimum torque developed up to rated speed.

NEMA Standard 10-29-1943.

MG 1-1.49 Breakdown Torque

The breakdown torque of a motor is the maximum torque which it will develop with rated voltage applied at rated frequency, without an abrupt drop in speed.

NEMA Standard 10-29-1943.

MG 1-1.50 Pull-out Torque

The pull-out torque of a synchronous motor is the maximum sustained torque which the motor will develop at synchronous speed with rated voltage applied at rated frequency and with normal excitation.

NEMA Standard 10-29-1943, revised 6-22-1950.

MG 1-1.51 Pull-in Torque

The pull-in torque of a synchronous motor is the maximum constant torque under which the motor will pull its connected inertia load into synchronism, at rated voltage and frequency, when its field excitation is applied.

The speed to which a motor will bring its load depends on the power required to drive it and whether the motor can pull the load into step from this speed depends on the inertia of the revolving parts, so that the pull-in torque cannot be determined without having the Wk^2 as well as the torque of the load.

NEMA Standard 10-29-1943.

Copyright National Electrical Manufacturers Association
Provided by IHS under license with NEMA
No reproduction or networking permitted without license from IHS

Not for Resale

MG 1-1.52 Locked-rotor Current

The locked-rotor current of a motor is the steady-state current taken from the line with the rotor locked and with rated voltage (and rated frequency in the case of alternating-current motors) applied to the motor.

NEMA Standard 5-27-1926, revised 6-22-1950.

MG 1-1.53 Temperature Tests

Temperature tests are tests taken to determine the temperature rise of certain parts of the machine above the ambient temperature, when running under a specified load.

NEMA Standard 6-24-1949.

MG 1-1.54 Ambient Temperature

Ambient temperature is the temperature of the surrounding cooling medium, such as gas or liquid, which comes into contact with the heated parts of the apparatus.

NOTE—Ambient temperature is commonly known as "room temperature" in connection with air-cooled apparatus not provided with artificial ventilation.

NEMA Standard 4-27-1944.

MG 1-1.55 High-potential Test

High-potential tests are tests which consist of the application of a voltage higher than the rated voltage for a specified time for the purpose of determining the adequacy against breakdown of insulating materials and spacings under normal conditions. (See MG 1, Part 3.)

NEMA Standard 10-29-1943.

MG 1-1.56 Starting Capacitance for a Capacitor Motor

The starting capacitance for a capacitor motor is the total effective capacitance in series with the starting winding under locked-rotor conditions.

NEMA Standard 6-24-1957.

MG 1-1.57 Radial Magnetic Pull and Axial Centering Force

A. RADIAL MAGNETIC PULL

The radial magnetic pull of a motor or generator is the magnetic force on the rotor resulting from its radial (air gap) displacement from magnetic center.

B. AXIAL CENTERING FORCE

The axial centering force of a motor or generator is the magnetic force on the rotor resulting from its axial displacement from magnetic center.

NOTE—Unless other conditions are specified, the value of radial magnetic pull and axial centering force will be for no load, with rated voltage, rated field current, and rated frequency applied, as applicable.

NEMA Standard 7-17-1974.

▲ Revised.

MG 1-1.58 Induction Motor Time Constants▲

A. GENERAL

When a polyphase induction motor is open-circuited or short-circuited while running at rated speed, the rotor flux-linkages generate a voltage in the stator winding. The decay of the rotor flux-linkages, and the resultant open-circuit terminal voltage or short-circuit current, is determined by the various motor time constants defined by the following equations:

B. OPEN-CIRCUIT AC TIME CONSTANT:

$$T''_{do} = \frac{X_M + X_2}{2\pi f r_2} \text{ (seconds)}$$

C. SHORT-CIRCUIT AC TIME CONSTANT:

$$T''_d = \frac{X_S}{X_1 + X_M} T''_{do} \text{ (seconds)}$$

D. SHORT-CIRCUIT DC TIME CONSTANT:

$$T_a = \frac{X_S}{2\pi f r_1 \left[1 + \frac{LL_s}{kW_1}\right]} \text{ (seconds)}$$

E. X/R RATIO:

$$X/R = \frac{X_S}{r_1 \left[1 + \frac{LL_s}{kW_1}\right]} \text{ (radians)}$$

F. DEFINITIONS (SEE FIG. 1-3):

r_1 = Stator dc resistance per phase corrected to operating temperature.

r_2 = Rotor resistance per phase at rated speed and operating temperature referred to stator.

X_1 = Stator leakage reactance per phase at rated current.

X_2 = Rotor leakage reactance per phase at rated speed and rated current referred to stator.

Copyright National Electrical Manufacturers Association
Provided by IHS under license with NEMA
No reproduction or networking permitted without license from IHS
Not for Resale

9009279 0003311 009

X_S = Total starting reactance (stator and rotor) per phase at zero speed and locked-rotor current.

X_M = Magnetizing reactance per phase.

LL_s = Fundamental-frequency component of stray-load loss in kW at rated current.

kW_1 = Stator I^2R loss in kW at rated current and operating temperature.

f = Rated frequency, hertz.

s = Slip in per unit of synchronous speed.

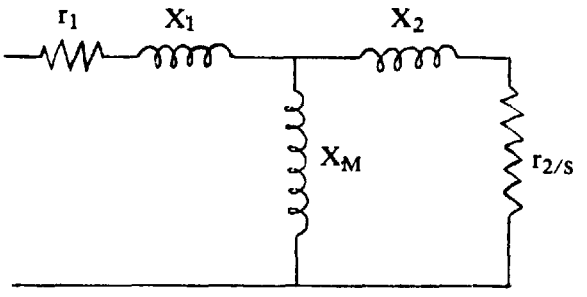

Fig. 1-3

NEMA Standard 3-19-1980, revised 9-3-1980.

COMPLETE MACHINES AND PARTS

MG 1-1.60 Synchronous Generators—Complete

A. BELTED TYPE

A belted-type generator consists of a generator with a shaft extension suitable for the driving pulley or sheave, with either two or three bearings as required, and with rails or with a sliding base which has provision for adjusting belt tension.

B. ENGINE TYPE

An engine-type generator consists of a stator, rotor "without shaft," foundation caps or sole plates, and brush rigging support. No base, bearings, shaft, shaft keys or foundation bolts are included in generators of this type.

C. COUPLED TYPE

A coupled-type generator consists of a generator with shaft extension for coupling and with one or two bearings.

NEMA Standard 8-7-1947, revised 11-12-1964.

MG 1-1.61 Direct-current Generator—Complete

A. BELTED TYPE

A belted-type generator consists of a generator with a shaft extension suitable for the driving pulley or sheave, with either two or three bearings as required, and with rails or with a sliding base which has provision for adjusting belt tension.

B. ENGINE TYPE

An engine-type generator consists of a field frame, armature (without shaft), foundation caps or sole plates (when required), and a brush rigging support. No base, bearings, shaft, shaft keys or foundation bolts are included in generators of this type.

C. COUPLED TYPE

A coupled-type generator consists of a generator with a shaft extension suitable for coupling, with either one or two bearings as required.

NEMA Standard 5-20-1912, revised 1-23-1951; 11-12-1964.

Copyright National Electrical Manufacturers Association
Provided by IHS under license with NEMA
No reproduction or networking permitted without license from IHS

Not for Resale

9009279 0003312 T45

CLASSIFICATION OF INSULATION SYSTEMS

MG 1-1.65 Insulation System Defined ▲

An insulation system is an assembly of insulating materials in association with the conductors and the supporting structural parts. All of the components described below that are associated with the stationary winding constitute one insulation system and all of the components that are associated with the rotating winding constitute another insulation system.

A. COIL INSULATION WITH ITS ACCESORIES

The coil insulation comprises all of the insulating materials that envelop and separate the current-carrying conductors and their component turns and strands and form the insulation between them and the machine structure; including wire coatings, varnish, encapsulants, slot insulation, slot fillers, tapes, phase insulation, pole-body insulation, and retaining ring insulation when present.

B. CONNECTION AND WINDING SUPPORT INSULATION

The connection and winding support insulation includes all of the insulation materials that envelop the connections, which carry current from coil to coil, and from stationary or rotating coil terminals to the points of external circuit attachment; and the insulation of any metallic supports for the winding.

C. ASSOCIATED STRUCTURAL PARTS

The associated structural parts of the insulation system includes items such as slot wedges, space blocks and ties used to position the coil ends and connections, any nonmetallic supports for the winding, and field-coil flanges.

NEMA Standard 3-8-1983.

MG1-1.66 Classification of Insulation Systems ▲

Insulation systems are divided into classes according to the thermal endurance of the system for temperature rating purposes. Four classes of insulation systems are used in motors and generators, namely, Classes A, B, F, and H. These classes have been established in accordance with IEEE Std. 1, *General Principles for Temperature Limits in the Rating of Electrical Equipment.*

Insulation systems shall be classified as follows:

Class A—A Class A insulation system is one which by experience or accepted test can be shown to have suitable thermal endurance when operating at the limiting Class A temperature specified in the temperature rise standard for the machine under consideration.

Class B—A Class B insulation system is one which by experience or accepted test can be shown to have suitable thermal endurance when operating at the limiting Class B temperature specified in the temperature rise standard for the machine under consideration.

Class F—A Class F insulation system is one which by experience or accepted test can be shown to have suitable thermal endurance when operating at the limiting Class F temperature specified in the temperature rise standard for the machine under consideration.

Class H—A Class H insulation system is one which by experience or accepted test can be shown to have suitable thermal endurance when operating at the limiting Class H temperature specified in the temperature rise standard for the machine under consideration.

"Experience," as used in this standard, means successful operation for a long time under actual operating conditions of machines designed with temperature rise at or near the temperature rating limit.

"Accepted test," as used in this standard, means a test on a system or model system which simulates the electrical, thermal, and mechanical stresses occurring in service.

Where appropriate to the construction, tests shall be made in accordance with the following applicable IEEE test procedures:

1. *Recommended Practice for Testing Insulation Resistance of Rotating Machinery,* Std 43.
2. *Evaluation of Systems of Insulating Materials for Random-Wound AC Electric Machinery,* Std 117.
3. *Evaluation of Systems of Insulation Materials for AC Electric Machinery Employing Form-Wound Preinsulated Stator Coils,* Std 275.
4. *Evaluation and Classification of Insulation Systems for DC Machines,* Std 304.

For other constructions for which tests have not been standardized, similar procedures may be used if it is shown that they properly discriminate between service-proven systems known to be different.

When evaluated by an accepted test, a new or modified insulation system shall be compared to an insulation system on which there has been substantial service experience. If a comparison is made on a system of the same class, the new system shall have equal or longer thermal endurance under the same test conditions; if the comparison is made with a system of a lower temperature class, it shall have equal or longer

▲ Revised.

Copyright National Electrical Manufacturers Association
Provided by IHS under license with NEMA
No reproduction or networking permitted without license from IHS
Not for Resale

9009279 0003313 981

thermal endurance at an appropriately higher temperature. When comparing systems of different classes, an appropriate higher temperature shall be considered to be 25°C per class higher than the temperature for the base insulation system class.

NEMA Standard 5-13-1942, revised 6-24-1949; 11-11-1954; 6-3-1956; 11-15-1962; 11-12-1970; 3-8-1983.

MISCELLANEOUS

MG 1-1.70 Code Letter

A code letter is a letter which appears on the nameplate of alternating-current motors to show their locked-rotor kVA per horsepower. The letter designations for locked-rotor kVA per horsepower are given in MG 1-10.36.

NEMA Standard 11-17-1949.

MG 1-1.71 Thermal Protector

A thermal protector is a protective device for assembly as an integral part of the machine and which, when properly applied, protects the machine against dangerous overheating due to overload and, in a motor, failure to start.

NOTE—The thermal protector may consist of one or more temperature sensing elements integral with the machine and a control device external to the machine.

NEMA Standard 11-17-1949, revised 9-21-1966.

MG 1-1.72 Thermally Protected

The words "thermally protected" appearing on the nameplate of a motor indicate that the motor is provided with a thermal protector.

NEMA Standard 11-17-1949, revised 9-21-1966; 12-16-1971.

MG 1-1.73 Overtemperature Protection

For alternating-current integral-horsepower motors, see MG 1-12.53.

For direct-current integral-horsepower motors, see MG 1-12.75.

Copyright National Electrical Manufacturers Association
Provided by IHS under license with NEMA
No reproduction or networking permitted without license from IHS

Not for Resale

9009279 0003314 818

MG 1-1.80 Marking Abbreviations for Motors and Generators

When abbreviations are used for markings which are attached to the motor or generator (rating plates, connections, etc.), they shall consist of capital letters because the conventional marking machines provide only numbers and capital letters and shall be in accordance with the following:

Abbreviation	Marking Indicated
A	Ampere
AC	Alternating current
AMB	Ambient
AO	Air over
ARM	Armature
BB	Ball bearing
BRG	Bearing
C	Celsius (Centigrade), degrees
CAP	Capacitor
CCW	Counterclockwise
CL	Class or classification
CODE	Code letter
CONN	Connection
CONT	Continuous
CFM	Cubic feet per minute
COMM	Commutating (interpole)
COMP	Compensating
CPD	Compound
C/S	Cycles per second
CW	Clockwise
DC	Direct current
DIAG	Diagram
EFF	Efficiency
ENCL	Enclosure
EXC	Exciter or Excitation
F	Fahrenheit, degrees
FF	Form Factor
FHP	Fractional horsepower
FLA	Full load amperes
FLD	Field
FR	Frame
FREQ	Frequency
GEN	Generator
GPM	Gallons per minute
GPS	Gallons per second
H	Henry
HI	High
HP	Horsepower
HR	Hour
HZ	Hertz
IND	Inductance or Induction
INS	Insulation System Class
KVA	Kilovolt-ampere
KVAR	Reactive Kilovolt-ampere
KW	Kilowatt
L*	Line
LB-FT	Pound-feet
LO	Low
LRA	Locked rotor amperes
MAX	Maximum
MFD	Microfarad
MG	Motor-generator
MH	Millihenry
MHP	Millihorsepower
MIN	Minimum
MIN	Minute
MTR	Motor
NEMA or DES†	NEMA Design Letter
NO or #	Number
OZ-FT	Ounce-feet
OZ-IN	Ounce-inch
PF	Power factor
PH	Phase, Phases or Number of Phases
●PM	Permanent magnet
RB	Roller bearing
RECT	Rectifier or rectified
RES	Resistance
RHEO	Rheostat
RMS	Root mean square
ROT	Rotation
RPM	Revolutions per minute
RTD	Resistance temperature detector
SB	Sleeve bearing
SEC	Second (time)
SEC	Secondary
SER	Serial or serial number
SER	Series
SF	Service factor
SFA	Service factor amperes
SH	Shunt
SPL	Special
STAB	Stabilized or stabilizing
STD	Standard
TACH	Tachometer
TC	Thermocouple
TEMP	Temperature
TEMP RISE	Temperature rise
TERM	Terminal
TH	Thermometer
TIME	Time rating
TORQ	Torque
TYPE	Type
V	Volt(s) or Voltage
VA	Volt-amperes
VAR	Reactive volt-amperes
W	Watt
WDG	Winding
WT	Weight

* May be used in conjunction with a number.
† Used in conjunction with a letter.

Suggested Standard for Future Design 11-21-1968, NEMA Standard 11-13-1969, revised 9-20-1972; 9-7-1977; 3-19-1980.

●Added.

Copyright National Electrical Manufacturers Association
Provided by IHS under license with NEMA
No reproduction or networking permitted without license from IHS
Not for Resale

9009279 0003315 754

SECTION I

STANDARDS APPLYING TO ALL MACHINES

Part 2. Terminal Markings

Copyright National Electrical Manufacturers Association
Provided by IHS under license with NEMA
No reproduction or networking permitted without license from IHS
Not for Resale

9009279 0003316 690

Part 2

TERMINAL MARKINGS

GENERAL

MG 1-2.01 Location of Terminal Markings

Terminal markings shall be placed on or directly adjacent to terminals to which connections must be made from outside circuits or from auxiliary devices which must be disconnected for shipment. Wherever specified, color coding may be used instead of the usual letter and numeral marking.

NEMA Standard 11-16-1967.

MG 1-2.02 Terminal Markings

A combination of capital letters or symbols and an arabic numeral shall be used to indicate the character or function of the windings which are brought to the terminal.

The following letters and symbols shall be used for motors and generators and their auxiliary devices when they are included within or mounted on the machine.

Armature—A1, A2, A3, A4, etc.
Brake—B1, B2, B3, B4, etc.
Alternating-current rotor windings (collector rings)‡—M1, M2, M3, M4, etc.
Capacitor—J1, J2, J3, J4, etc.
Control signal lead attached to commutating winding—C.
Dynamic braking resistor—BR1, BR2, BR3, BR4, etc.
Field (series)—S1, S2, S3, S4, etc.
Field (shunt)—F1, F2, F3, F4, etc.
Line—L1, L2, L3, L4, etc.
Magnetizing winding (for initial and maintenance magnetization and demagnetization of permanent magnet fields)—E1, E2, E3, E4, etc. (NOTE—E1, E3, or other odd-numbered terminals should be attached to the positive terminal of the magnetizing power supply for magnetization and to the negative terminal for demagnetization.)
Resistance (armature and miscellaneous)—R1, R2, R3, R4, etc.
Resistance (shunt field adjusting)—V1, V2, V3, V4, etc.
Shunt braking resistor—DR1, DR2, DR3, DR4, etc.
Space heaters—H1, H2, H3, H4, etc.
Stator‡—T1, T2, T3, T4, etc.
Starting switch—K.
Thermal protector—P1, P2, P3, P4, etc.
Equalizing lead—= (equality sign).
Neutral connection—Terminal letter with numeral 0.

For the significance of the arabic numeral, see MG 1-2.20 for alternating-current machines and MG 1-2.10 for direct-current machines.

‡ For alternating-current machines only.

NEMA Standard 11-16-1967, revised 11-21-1968.

MG 1-2.03 Direction of Rotation

A. Alternating-current Machines

See MG 1-2.24.

B. Direct-current Machines

See MG 1-2.11.

C. Motor-generator Sets

When one motor and one generator are coupled together at their drive ends, the standard direction of rotation for both machines shall be as given for that type of machine and will apply to the motor-generator set without a change in connections.

The correct direction of rotation shall be clearly indicated on a motor-generator set.

NEMA Standard 11-16-1967.

When two or more machines are coupled together but not at their drive ends, the standard direction of rotation cannot apply to all machines in the set. Changes in connections will be necessary for those machines operating in the opposite direction of rotation.

Authorized Engineering Information 11-16-1967.

DIRECT-CURRENT MOTORS AND GENERATORS

MG 1-2.10 Terminal Markings

A. The markings comprising letters and numbers on the terminals of a direct-current machine shall indicate the relation of circuits within the machine.

B. When an armature lead passes through the commutating or compensating field, or any combination of these fields, before being brought out for connection to the external circuit, the terminal marking of this lead shall be an "A". When an armature lead passes through a series field and all internal connections are permanently made, the lead brought out shall be marked with an appropriate "S" designation. If an equalizer lead for paralleling purposes is brought out, it shall be marked with an = (equality sign).

C. All numerals shall be determined on the following fundamental basis. The numerals of

Copyright National Electrical Manufacturers Association
Provided by IHS under license with NEMA
No reproduction or networking permitted without license from IHS
Not for Resale

9009279 0003317 527

all the terminals of direct-current machines shall be selected so that when the direction of current in any single excitation winding is from a lower to a higher numeral, the voltage generated (counter electromotive force in a motor) in the armature from this excitation shall, for counterclockwise rotation facing the end opposite the drive, make armature terminal A1 positive and A2 negative. With excitation applied in the same manner, the opposite rotation will result in A2 being positive and A1 negative.

In accordance with the fundamental basis, a standard direction of rotation direct-current motor or generator (as defined in MG 1-2.11) with a single field winding will have current flow in both armature and field circuits in the same direction with respect to the numeral sequence. Any other accumulative field winding will have current flow with respect to its numeral sequence in the same direction as the current in the main field winding. Any differential field winding will have current direction with respect to its numeral sequence in the opposite direction to the current flow in the main field.

NEMA Standard 11-16-1967.

MG 1-2.11 Direction of Rotation

A. Direct-current Motors

The standard direction of shaft rotation for direct-current motors shall be counterclockwise facing the end opposite the drive.

NEMA Standard 11-16-1967.

The direction of shaft rotation of direct-current motors depends on the relative polarities of the field and armature and, therefore, if the polarities of both are reversed, the direction of rotation will be unchanged. Since the field excitation of direct-current motors is obtained from an external source, residual magnetism has no practical effect on polarity except for those with permanent magnet excitation. Reversal of the shaft rotation of a direct-current motor is obtained by a transposition of the two armature leads or by a transposition of the field leads. With such reversed shaft rotation (clockwise) and when the polarity of the power supply is such that the direction of the current in the armature is from terminal 2 to terminal 1, the current will be flowing in the field windings from terminal 1 to terminal 2, and vice versa.

Authorized Engineering Information 11-16-1967.

B. Direct-current Generators

The standard direction of shaft rotation for direct-current generators shall be clockwise facing the end opposite the drive.

NEMA Standard 11-16-1967.

The direction of rotation of a generator mounted as a part of an engine-generator set is usually counterclockwise facing the end opposite the drive.

Self-excited direct-current generators, with connections properly made for standard direction of shaft rotation (clockwise), will not function if driven counterclockwise as any small current delivered by the armature tends to demagnetize the fields and thus prevent the armature from delivering current. If the conditions call for reversed direction of shaft rotation, connections should be made with either the armature leads transposed or the field leads transposed. The polarity of a self-excited direct-current generator, with accompanying direction of current flow in the several windings, is determined by the polarity of the residual magnetism. An accidental or unusual manipulation may reverse this magnetic polarity. Though the generator itself will function as well with either polarity, an unforeseen change may cause disturbance or damage to other generators or devices when the generator is connected to them.

C. Reverse Function

A direct-current machine can be used either as a generator or as a motor if the field design is suitable for such operation. (The manufacturer should be consulted regarding this.) For the desired direction of rotation, connection changes may be necessary. The conventions for current flow in combination with the standardization of opposite directions of rotation for direct-current generators and direct-current motors are such that any direct-current machine can be called "generator" or "motor" without a change in terminal markings.

Authorized Engineering Information 11-16-1967.

MG 1-2.12 Connection Diagrams with Terminal Markings for Direct-current Motors ▲

The connection diagrams with terminal markings for direct-current motors shall be as shown in Figs. 2-1 through 2-6b.

When connections between different windings are made permanently inside the machine, any lead brought out of the machine from the junction (except a control lead) shall bear the terminal markings of all windings to which it is connected except that no markings shall be included for commutating and compensating fields.

NEMA Standard 11-16-1967.

These connection diagrams show all leads from the armature, the shunt field and the series (or stabilizing) field brought out of the machines. The same diagram is, therefore, applicable for reversing the nonreversing motors. The dotted connections may be made inside the machine or outside the machine as conditions require. The relationship between the terminal marking numbers, the relative polarity of the windings and the direction of rotation is in accordance with MG 1-2.11, but the polarities shown in these connection diagrams, while preferred, are not standardized.

NOTE I—See MG 1-2.02 for terminal letters assigned to different types of windings and par. C of MG 1-2.10 for the significance of the numerals.

NOTE II—The connections shown are for cumulative series fields. Differential connection of the series field in direct-current motors is very seldom used but, when required, no change should be made on the field leads or terminal markings on the machine, but the connection of the series field to the armature should be shown reversed.

▲ Revised.

Copyright National Electrical Manufacturers Association
Provided by IHS under license with NEMA
No reproduction or networking permitted without license from IHS
Not for Resale

9009279 0003318 463

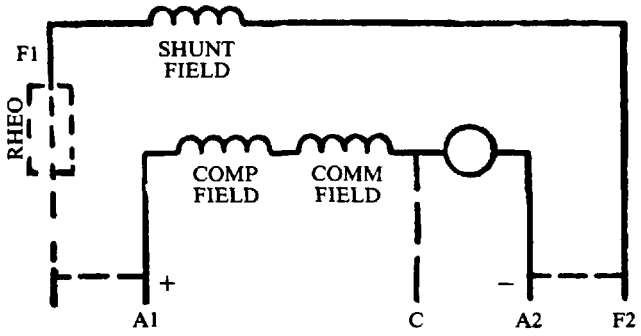

Fig. 2-1▲
Shunt Motor—Counterclockwise Rotation Facing End Opposite Drive, Clockwise Rotation Facing Drive End

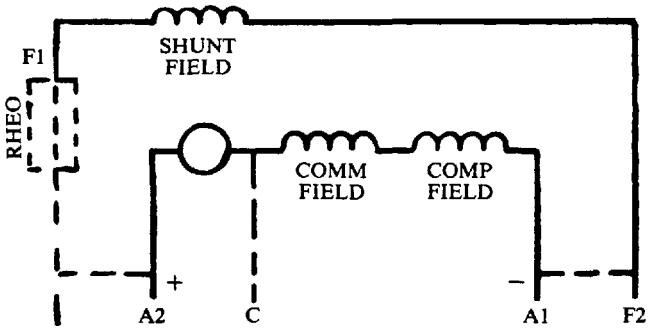

Fig. 2-2▲
Shunt Motor—Clockwise Rotation Facing End Opposite Drive, Counterclockwise Rotation Facing Drive End

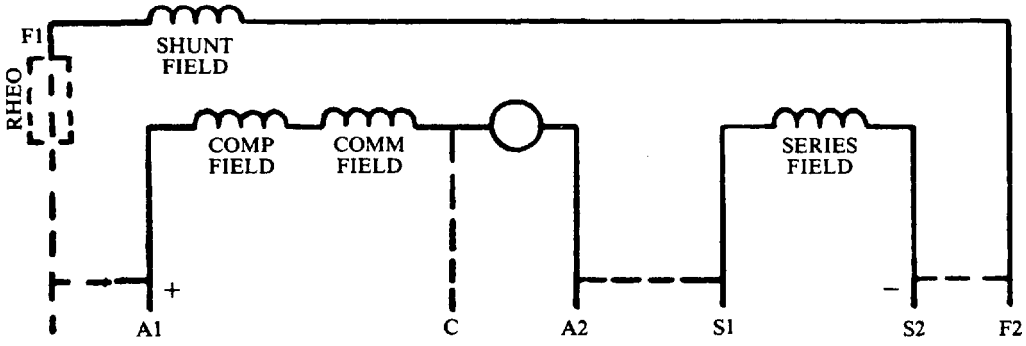

Fig. 2-3▲
Compound or Stabilized Shunt Motor—Counterclockwise Rotation Facing End Opposite Drive, Clockwise Rotation Facing Drive End

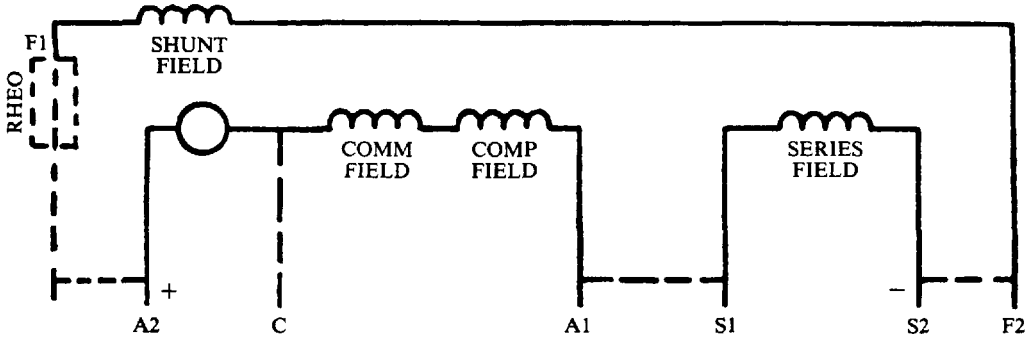

Fig. 2-4▲
Compound or Stabilized Shunt Motor—Clockwise Rotation Facing End Opposite Drive, Counterclockwise Rotation Facing Drive End

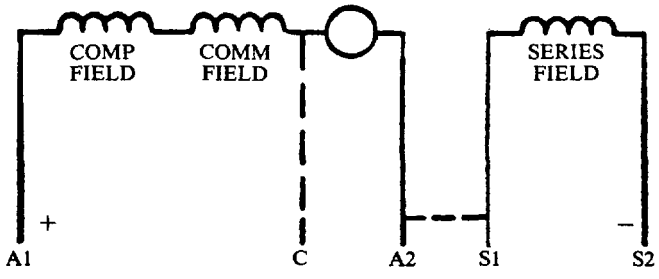

Fig. 2-5▲
Series Motor—Counterclockwise Rotation Facing End Opposite Drive, Clockwise Rotation Facing Drive End

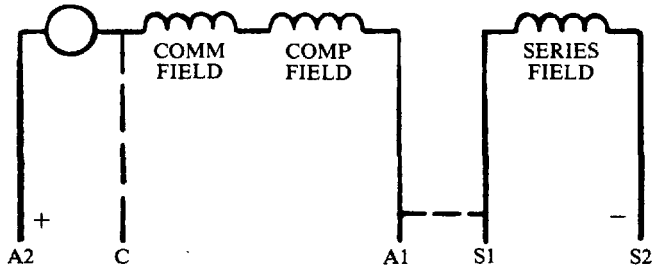

Fig. 2-6▲
Series Motor—Clockwise Rotation Facing End Opposite Drive, Counterclockwise Rotation Facing Drive End

▲ Figure title editorially revised.

Copyright National Electrical Manufacturers Association
Provided by IHS under license with NEMA
No reproduction or networking permitted without license from IHS
Not for Resale

9009279 0003319 3TT

NOTE III—Commutating, compensating and series field windings are shown on the A1 side of the armature but this location, while preferred, is not standardized. If sound engineering, sound economics or convenience so dictates, these windings may be connected on either side of the armature or may be divided part on one side and part on the other.

NOTE IV—For shunt-wound, stabilized-shunt-wound and compound-wound motors, the shunt field may be either connected in parallel with the armature as shown by the dotted lines or may be separately excited. When separately excited, the shunt field is usually isolated from the other windings of the machine, but the polarity of the voltage applied to the shunt field must be as shown for the particular rotation and armature and series field polarities.

NOTE V—When the compensating field or both the commutating and the compensating fields are omitted from any machine, the terminal markings do not change.

NOTE VI—The lead designated by C, if used, is for control purposes and would not be used in any machine which has neither commutating nor compensating fields. In utilizing this terminal, the location of the commutating and/or compensating field must be known. See Note III.

NOTE VII—The position of the field rheostat shown in these diagrams does not indicate any preference. The field rheostat may be attached to either terminal of the shunt field.

Authorized Engineering Information 11-16-1967, revised 3-19-1980.

MG 1-2.13 Connection Diagrams with Terminal Markings for Direct-current Generators

The connection diagrams with terminal markings for direct-current generators shall be as shown in Fig. 2-7 through 2-10.

When connections between different windings are made permanently inside the machine, any lead brought out of the machine from the junction (except an equalizer or control lead) shall bear the terminal markings of all windings to which it is connected except that no markings shall be included for commutating and compensating fields.

NEMA Standard 11-16-1967.

These connection diagrams show all leads from the armature, the shunt field and the series field brought out of the machines. The dotted connections may be made inside the machine or outside the machine as conditions require. The relationship between the terminal marking numbers, the relative polarity of the windings and the direction of rotation is in accordance with MG 1-2.11, but the polarities shown in these connection diagrams, while preferred are not standardized.

NOTE I—See MG 1-2.02 for terminal letters assigned to different types of windings and par. C of MG 1-2.10 for the significance of the numerals.
NOTE II—The connections shown are for cumulative series fields. For differential connection of the series fields, no change should be made on the field leads or terminal markings on the machine, but the connection of the series field to the armature should be shown reversed.
NOTE III—Commutating, compensating and series field windings are shown on the A1 side of the armature, but this location, while preferred, is not standardized. If sound engineering, sound economics or convenience so dictates, these windings may be connected on either side of the armature or may be divided part on one side and part on the other.
NOTE IV—Fig. 2-9 and 2-10 show the shunt field connected either inside or outside the series field. Either may be used depending upon the desired characteristics.
NOTE V—For shunt-wound generators and compound-wound generators the shunt-field may be either self-excited or separately excited. When self-excited, connections should be made as shown by the dotted lines. When separately excited, the shunt field is usually isolated from the other windings of the machine, but the polarity of the voltage applied to the shunt field must be as shown for the particular rotation and armature polarity.
NOTE VI—When the compensating field or both the commutating and the compensating fields are omitted from any machine, the terminal markings do not change.
NOTE VII—The terminal designated by C, if used, is for control purposes and would not be used in any machine which has neither commutating nor compensating fields. In utilizing this terminal, the location of the commutating and/or compensating field must be known. See Note III.
NOTE VIII—The position of the field rheostat shown in these diagrams does not indicate any preference. The field rheostat may be attached to either terminal of the shunt field.

Authorized Engineering Information 11-16-1967.

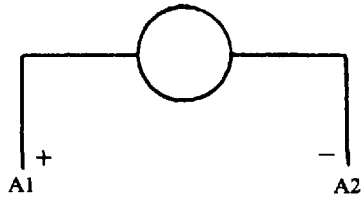

Fig. 2-6a †●
Permanent Magnet Motor—Counterclockwise Rotation Facing End Opposite Drive, Clockwise Rotation Facing Drive End

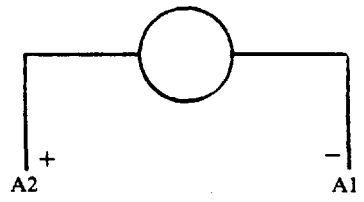

Fig. 2-6b †●
Permanent Magnet Motor—Clockwise Rotation Facing End Opposite Drive, Counter Clockwise Rotation Facing Drive End

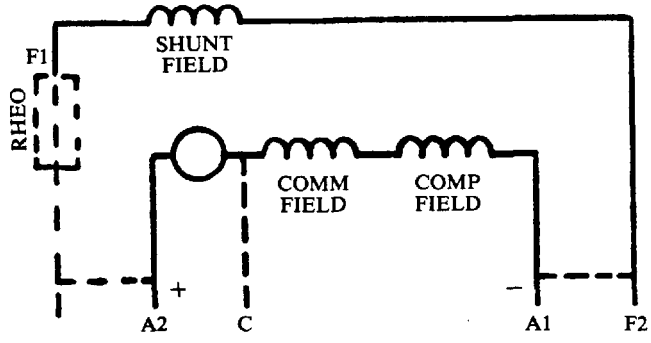

Fig. 2-7▲
Shunt Generator—Clockwise Rotation Facing End Opposite Drive, Counterclockwise Rotation Facing Drive End

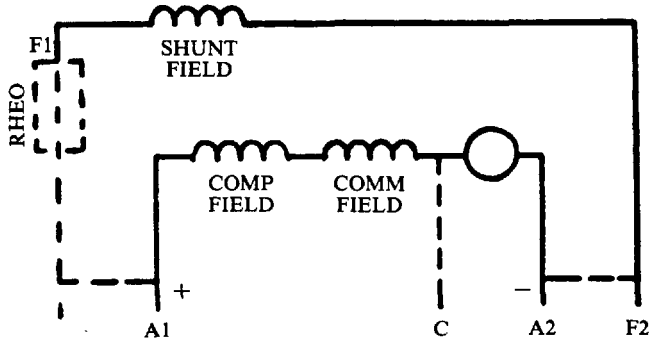

Fig. 2-8▲
Shunt Generator—Counterclockwise Rotation Facing End Opposite Drive, Clockwise Rotation Facing Drive End

† When magnetizing windings are provided, see MG 1-2.02.
●Added.
▲Figure title editorially revised.

Copyright National Electrical Manufacturers Association
Provided by IHS under license with NEMA
No reproduction or networking permitted without license from IHS Not for Resale

9009279 0003320 011

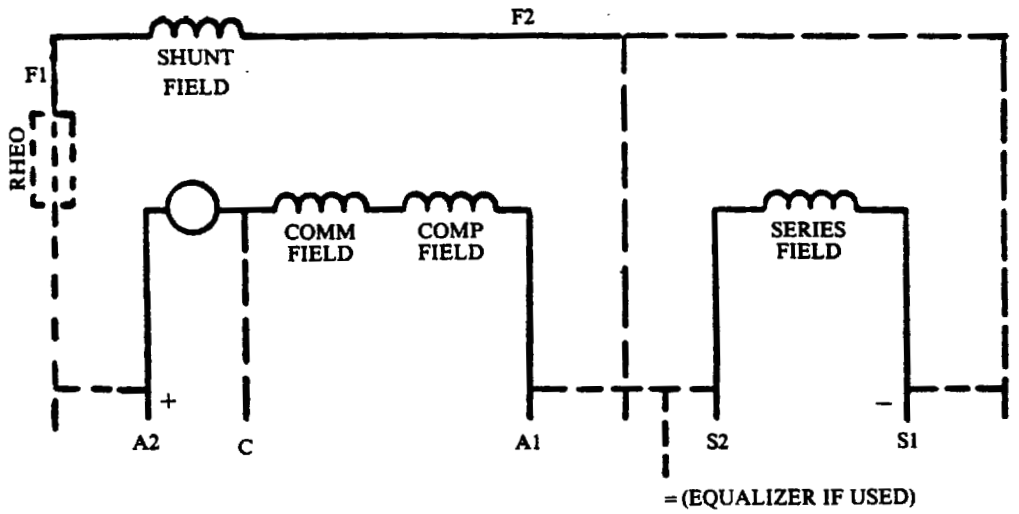

Fig. 2-9▲
Compound Generator—Clockwise Rotation Facing End
Opposite Drive, Counterclockwise Rotation Facing Drive End

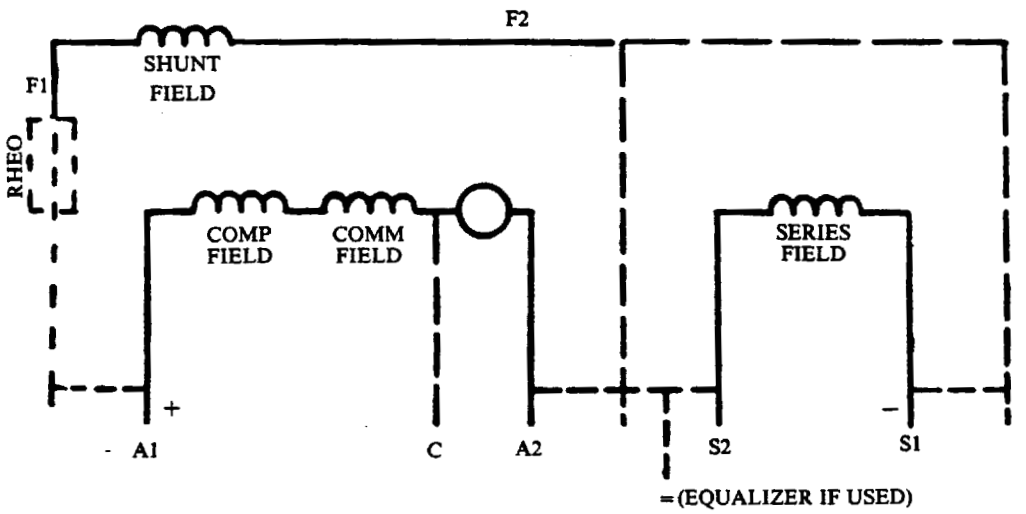

Fig. 2-10▲
Compound Generator—Counterclockwise Rotation Facing End
Opposite Drive, Clockwise Rotation Facing Drive End

ALTERNATING-CURRENT MOTORS AND GENERATORS

MG 1-2.20 Numerals on Terminals of Alternating-current Polyphase Machines

A. Synchronous Machines

The numerals 1, 2, 3, etc., indicate the order in which the voltages at the terminals reach their maximum positive values (phase sequence) with clockwise shaft rotation when facing the connection end of the coil windings: hence, for counter-clockwise shaft rotation (not standard) when facing the same end, the phase sequence will be 1, 3, 2.

B. Induction Machines

Terminal markings of polyphase induction machines are not related to the direction of rotation.

Authorized Engineering Information 11-19-1967.

▲ Figure title editorially revised.

Copyright National Electrical Manufacturers Association
Provided by IHS under license with NEMA
No reproduction or networking permitted without license from IHS
Not for Resale

9009279 0003321 T58

MG 1-2.21 Definition of Phase Sequence

Phase sequence is the order in which the voltages successively reach their maximum positive values between terminals.

NEMA Standard 11-16-1967.

MG 1-2.22 Phase Sequence

The order of numerals on terminal leads does not necessarily indicate the phase sequence, but the phase sequence is determined by the direction of shaft rotation relative to the connection end of the coil winding.

Authorized Engineering Information 11-16-1967.

MG 1-2.23 Direction of Rotation of Vectors

Vector diagrams shall be shown so that advance in phase of one vector with respect to another is in the counterclockwise direction. See Fig. 2-11 in which vector 1 is 120 degrees in advance of vector 2 and the phase sequence is 1, 2, 3. (See MG 1-2.21.)

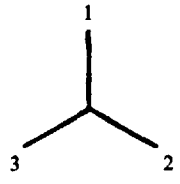

Fig. 2-11

NEMA Standard 11-16-1967.

MG 1-2.24 Direction of Rotation

The standard direction of rotation for alternating generators is clockwise when facing the end of the machine opposite the drive.

NEMA Standard 11-16-1967.

The direction of rotation of a generator mounted as a part of an engine-generator set is usually counterclockwise when facing the end opposite the drive.

Authorized Engineering Information 11-16-1967.

The standard direction of rotation for all alternating-current single-phase motors, all synchronous motors, and all universal motors shall be counterclockwise when facing the end of the machine opposite the drive.

NEMA Standard 11-16-1967.

MG 1-2.25 Reversal of Rotation, Polarity and Phase Sequence

Alternating-current generators driven counterclockwise when facing the connection end of the coil windings will generate without change in connections, but the terminal phase sequence will be 1, 3, 2.

Synchronous condensers and synchronous motors may be operated with counterclockwise shaft rotation viewed from the connection end of the coil windings by connecting them to leads in which the phase sequence is 1, 2, 3, in the following manner:

Power leads.....1, 2, 3
Machine terminals.....1, 3, 2

Authorized Engineering Information 11-16-1967.

ALTERNATING-CURRENT GENERATORS AND SYNCHRONOUS MOTORS

MG 1-2.30 Connections and Terminal Markings—Alternating-current Generators and Synchronous Motors—One, Two and Three Phase

The alternating-current windings of three-phase alternating-current generators and synchronous motors shall have terminal markings as given in MG 1-2.61 for three-phase single-speed induction motors.

The alternating-current windings of two-phase alternating-current generators and synchronous motors shall have terminal markings as given in MG 1-2.66 for two-phase single-speed induction motors.

The alternating-current windings of single-phase alternating-current generators and synchronous motors shall have terminal markings as given in Fig. 2-12.

The terminal markings of direct-current field windings shall be F1 and F2.

NEMA Standard 11-16-1967.

NOTE—See MG 1-2.02 for terminal letters assigned to different types of windings and MG 1-2.20 for the significance of the numerals.

Authorized Engineering Information 11-16-1967.

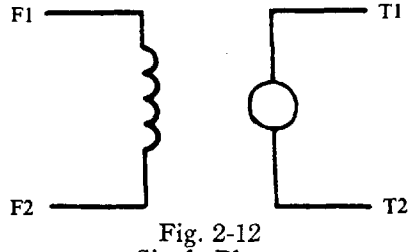

Fig. 2-12
Single Phase

Copyright National Electrical Manufacturers Association
Provided by IHS under license with NEMA
No reproduction or networking permitted without license from IHS
Not for Resale

9009279 0003322 994

SINGLE-PHASE MOTORS

MG 1-2.40 General

A. DUAL VOLTAGE

Regardless of type, when a single-phase motor is reconnectible series-parallel for dual voltage, the terminal marking shall be determined as follows:

For the purpose of assigning terminal markings, the main winding is assumed to be divided into two halves, and T1 and T2 should be assigned to one half and T3 and T4 to the other half.

For the purpose of assigning terminal markings, the auxiliary winding (if present) is assumed to be divided into two halves, and T5 and T6 should be assigned to one half and T7 and T8 to the other half.

Polarities shall be established so that the standard direction of rotation (counterclockwise facing the end opposite the drive) is obtained when the main winding terminal T4 and the auxiliary winding terminal T5 are joined or when an equivalent circuit connection is made between the main and auxiliary winding.

The terminal marking arrangement is shown diagrammatically in Fig. 2-13.

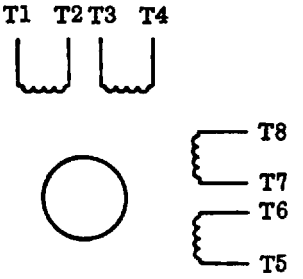

Fig. 2-13
Dual Voltage

B. SINGLE VOLTAGE

If a single-phase motor is single voltage or if either winding is intended for only one voltage, the terminal marking shall be determined as follows.

T1 and T4 shall be assigned to the main winding and T5 and T8 to the auxiliary winding (if present) with the polarity arrangement such that the standard direction of rotation is obtained if T4 and T5 are joined to one line and T1 and T8 to the other.

The terminal marking arrangement is shown diagrammatically in Fig. 2-14.

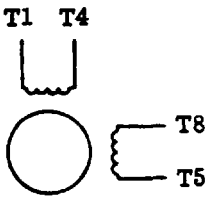

Fig. 2-14
Single Voltage

NEMA Standard 11-16-1967.

NOTE I—It has been found to be impracticable to follow this standard for the terminal markings of some definite-purpose motors. See Part 18.
NOTE II—No general standards have been developed for terminal markings of multispeed motors because of the great variety of methods employed to obtain multiple speeds.

Authorized Engineering Information 11-16-1967.

MG 1-2.41 Terminal Markings Identified by Color

When single-phase motors use lead colors instead of letter and number markings to identify the leads, the color assignment shall be determined from the following:

T1—Blue
T2—White
T3—Orange
T4—Yellow
T5—Black
T8—Red
P1—No color assigned
P2—Brown

NEMA Standard 11-16-1967.

NOTE—It has been found to be impracticable to follow this standard for the lead markings of some definite-purpose motors. See Part 18.

Authorized Engineering Information 11-16-1967.

MG 1-2.42 Auxiliary Devices Within Motor

The presence of an auxiliary device or devices, such as a capacitor, starting switch, thermal protector, etc., permanently connected in series between the motor terminal and the part of the winding to which it ultimately connects shall not affect the marking unless a terminal is provided at the junction.

Where a terminal is provided at the junction, the terminal marking of this junction shall be determined by the part of the winding to which it is connected. Any other terminals connected to this auxiliary device shall be identified by a letter indicating the auxiliary device within the motor to which the terminal is connected.

NEMA Standard 11-16-1967.

MG 1-2.43 Auxiliary Devices External to Motor

Where the capacitors, resistors, inductors, transformers or other auxiliary devices are housed separately from the motor, the terminal markings shall be those established for the device.

NEMA Standard 11-16-1967.

Copyright National Electrical Manufacturers Association
Provided by IHS under license with NEMA
No reproduction or networking permitted without license from IHS
Not for Resale

9009279 0003323 820

MG 1-2.44 Marking of Rigidly-mounted Terminals

On a terminal board, the identification of rigidly-mounted terminals shall be either by marking on the terminal board or by means of a diagram attached to the machine. When all windings are permanently connected to rigidly-mounted terminals, these terminals may be identified in accordance with the terminal markings specified in this publication. When windings are not permanently attached to rigidly-mounted terminals on a terminal board, the rigidly-mounted terminals shall be identified by numbers only, and the identification need not coincide with that of the terminal leads connected to the rigidly-mounted terminals.

NEMA Standard 11-16-1967.

MG 1-2.45 Internal Auxiliary Devices Permanently Connected to Rigidly-mounted Terminals

If the motor design is such that the starting switch, thermal protector or other auxiliary device is permanently connected to a rigidly-mounted terminal, some variation from the connection arrangements illustrated in MG 1-2.47 through MG 1-2.53 will be required. However, any variations shall be based on the provisions of MG 1-2.46.

NEMA Standard 11-16-1967.

MG 1-2.46 General Principles for Terminal Markings for Single-Phase Motors

The terminal marking and connection procedure given in MG 1-2.40 through MG 1-2.45 and in the schematic diagrams which follow are based on the following principles:

A. First Principle

The main winding of a single-phase motor is designated by T1, T2, T3 and T4 and the auxiliary winding by T5, T6, T7 and T8 to distinguish it from a quarter-phase motor which uses odd numbers for one phase and even numbers for the other phase.

B. Second Principle

By following the first principle, it follows that odd-to-odd numbered terminals of each winding are joined for lower voltage (parallel) connection and odd-to-even numbered terminals of each winding are joined for higher voltage (series) connection.

C. Third Principle

The rotor of a single-phase motor is represented by a circle, even though there are no external connections to it. It also serves to distinguish the single-phase motor schematic diagram from that of the quarter-phase motor in which the rotor is never represented.

Authorized Engineering Information 11-16-1967.

Copyright National Electrical Manufacturers Association
Provided by IHS under license with NEMA
No reproduction or networking permitted without license from IHS
Not for Resale

Copyright National Electrical Manufacturers Association
Provided by IHS under license with NEMA
No reproduction or networking permitted without license from IHS

MG 1-2.47 Schematic Diagrams for Split-Phase Motors—Single Voltage—Reversible

NOTE—Motor starting switch shown in running position. All directions of rotation shown are facing the end opposite the drive.

Without Thermal Protector

Line Leads

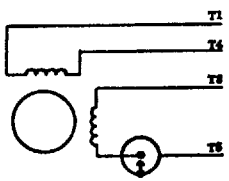

	L1	L2
Counter-clockwise rotation	T1, T8	T4, T5
Clockwise rotation	T1, T5	T4, T8

Fig. 2-15

Terminal Board

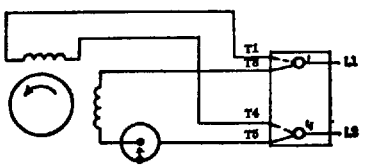

To obtain clockwise rotation, interchange leads T5 and T8.

Fig. 2-16.a

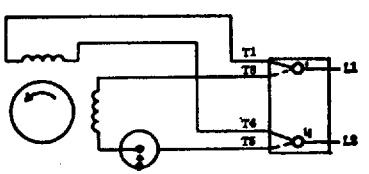

To obtain clockwise rotation, interchange leads T1 and T4.

Fig. 2-16.b

NOTE—When terminal boards are shown, they are viewed from the front. Dotted lines indicate permanent connection.

With Thermal Protector

Line Leads

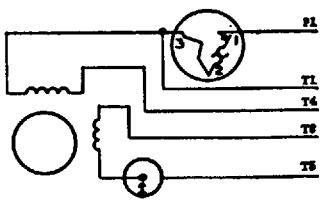

	L1	L2	Join
Counter-clockwise rotation	P1	T4, T5	T1, T8
Clockwise rotation	P1	T4, T8	T1, T5

Fig. 2-17

Terminal Board

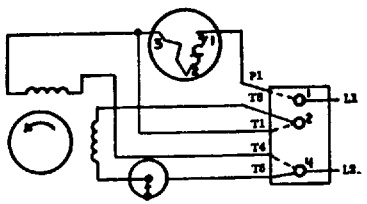

To obtain clockwise rotation, interchange leads T5 and T8.

Fig. 2-18.a

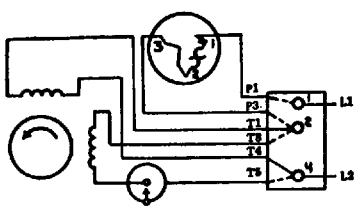

To obtain clockwise rotation, interchange leads T1 and T4.

Fig. 2-18.b

NOTE—When terminal boards are shown, they are viewed from the front. Dotted lines indicate permanent connection.

9009279 0003324 767

Not for Resale

Copyright National Electrical Manufacturers Association
Provided by IHS under license with NEMA
No reproduction or networking permitted without license from IHS
Not for Resale

9009279 0003325 6T3

MG 1-2.48 Schematic Diagrams for Capacitor-Start Motors—Reversible

NOTE—Motor starting switch shown in running position. All directions of rotation shown are facing the end opposite the drive.

Single Voltage—Without Thermal Protector

Line Leads

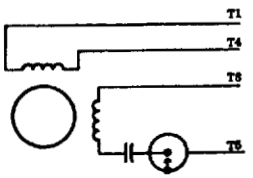

	L1	L2
Counter-clockwise rotation	T1, T8	T4, T5
Clockwise rotation	T1, T5	T4, T8

Fig. 2-19

Terminal Board

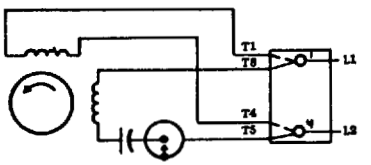

To obtain clockwise rotation, interchange leads T5 and T8.

Fig. 2-20.a

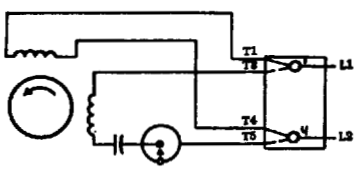

To obtain clockwise rotation, interchange leads T1 and T4.

Fig. 2-20.b

NOTE—When terminal boards are shown, they are viewed from the front. Dotted lines indicate permanent connection.

Single Voltage—With Thermal Protector

Line Leads

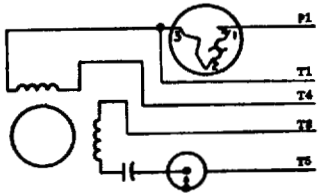

	L1	L2	Join
Counter-clockwise rotation	P1	T4, T5	T1, T8
Clockwise rotation	P1	T4, T8	T1, T5

Fig. 2-21

Terminal Board

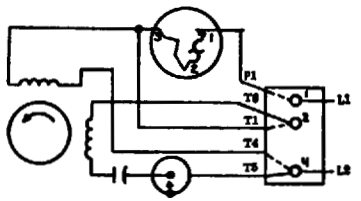

To obtain clockwise rotation, interchange leads T5 and T8.

Fig. 2-22.a

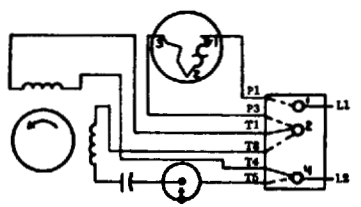

To obtain clockwise rotation, interchange leads T1 and T4.

Fig. 2-22.b

NOTE—When terminal boards are shown, they are viewed from the front. Dotted lines indicate permanent connection.

MG 1-2.48 Schematic Diagrams for Capacitor-Start Motors—Reversible—(*Continued*)

NOTE—Motor starting switch shown in running position. All directions of rotation shown are facing the end opposite the drive.

Double Voltage—Without Thermal Protector

Line Leads

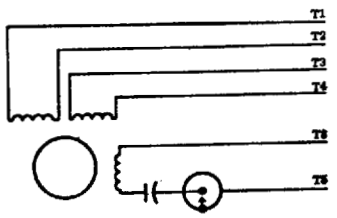

		L1	L2	Join
Higher nameplate voltage	Counter clockwise rotation	T1	T4, T5	T2, T3 and T8
	Clockwise rotation	T1	T4, T8	T2, T3 and T5
Lower nameplate voltage	Counter-clockwise rotation	T1, T3, T8	T2, T4, T5	
	Clockwise rotation	T1, T3, T5	T2, T4, T8	

Fig. 2-23

Terminal Board

Higher Nameplate Voltage

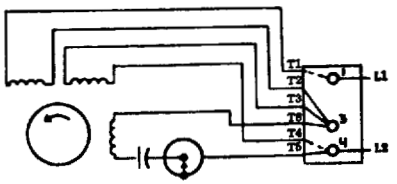

To obtain clockwise rotation, interchange leads T5 and T8.

Fig. 2-24.a

Lower Nameplate Voltage

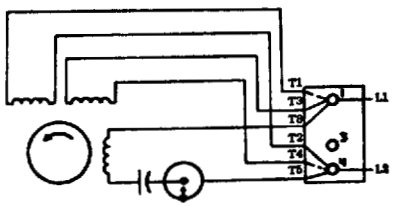

To obtain clockwise rotation, interchange leads T5 and T8

Fig. 2-24.b

NOTE—When terminal boards are shown, they are viewed from the front. Dotted lines indicate permanent connection.

Terminal Board with Links

Higher Nameplate Voltage

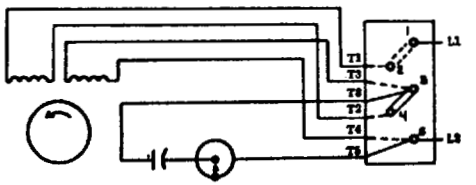

To obtain clockwise rotation, interchange leads T5 and T8.

Fig. 2-25.a

Lower Nameplate Voltage

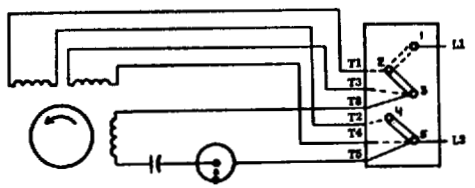

To obtain clockwise rotation, interchange leads T5 and T8.

Fig. 2-25.b

NOTE—When terminal boards are shown, they are viewed from the front. Dotted lines indicate permanent connection.

9009279 0003326 53T
Copyright National Electrical Manufacturers Association
Provided by IHS under license with NEMA
No reproduction or networking permitted without license from IHS
Not for Resale

Copyright National Electrical Manufacturers Association
Provided by IHS under license with NEMA
No reproduction or networking permitted without license from IHS
Not for Resale

9009279 0003327 476

MG 1-2.48 Schematic Diagrams for Capacitor-Start Motors—Reversible—(*Continued*)

NOTE I—The design proportions for dual-voltage, reversible, capacitor-start motors are such that three different groups of diagrams are necessary to show the means for obtaining adequate protection for these motors. These three groups of diagrams (I, II, and III) insert the thermal protector at different points in the circuit; therefore, different currents are provided to actuate the thermal protector.
NOTE II—Motor starting switch shown in running position. All directions of rotation shown are facing the end opposite the drive.

GROUP I—DOUBLE VOLTAGE—WITH THERMAL PROTECTOR

Line Leads

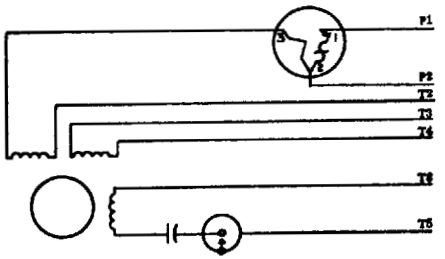

		L1	L2	Join	Join
Higher nameplate voltage	Counter-clockwise rotation	P1	T4	P2, T8	T2, T3 T5
	Clockwise rotation	P1	T4	P2, T5	T2, T3, T8
Lower nameplate voltage	Counter-clockwise rotation	P1	T2, T4, T5	P2, T3, T8	...
	Clockwise rotation	P1	T2, T4, T8	P2, T3, T5	...

Fig. 2-26

Terminal Board

Higher Nameplate Voltage

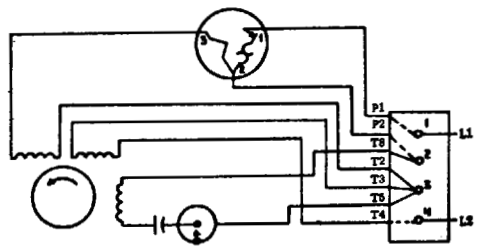

To obtain clockwise rotation, interchange leads T5 and T8.

Fig. 2-27.a

Lower Nameplate Voltage

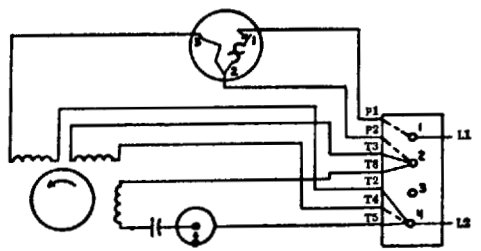

To obtain clockwise rotation, interchange leads T5 and T8.

Fig. 2-27.b

NOTE III—When terminal boards are shown, they are viewed from the front. Dotted lines indicate permanent connection.
NOTE IV—Proper connection depends upon design of motor and thermal protector; refer to motor manufacturers' information for proper diagram.

Terminal Board with Links

Higher Nameplate Voltage

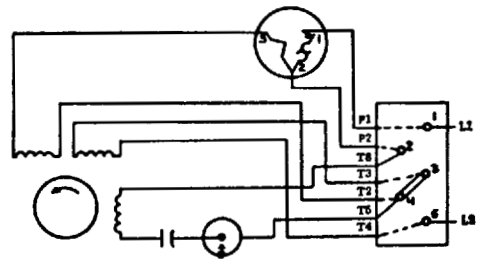

To obtain clockwise rotation, interchange leads T5 and T8.

Fig. 2-28.a

Lower Nameplate Voltage

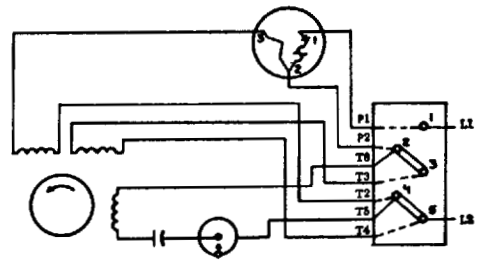

To obtain clockwise rotation, interchange leads T5 and T8.

Fig. 2-28.b

NOTE—When terminal boards are shown, they are viewed from the front. Dotted lines indicate permanent connection.

Copyright National Electrical Manufacturers Association
Provided by IHS under license with NEMA
No reproduction or networking permitted without license from IHS
Not for Resale

MG 1-2.48 Schematic Diagrams for Capacitor-Start Motors—Reversible—(*Continued*)

NOTE—Motor starting switch shown in running position. All directions of rotation shown are facing the end opposite the drive.

GROUP II—DOUBLE VOLTAGE—WITH THERMAL PROTECTOR

Line Leads

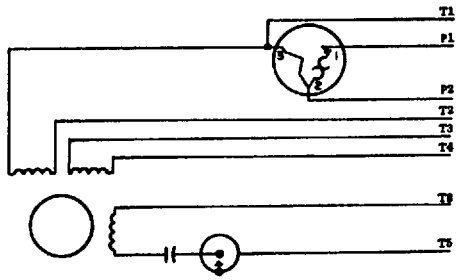

		L1	L2	Join	Join	Insulate Separately
Higher nameplate voltage	Counter-clockwise rotation	P1	T4, T5	T2, T3, T8	...	P2, T1
	Clockwise rotation	P1	T4, T8	T2, T3, T5	...	P2, T1
Lower nameplate voltage	Counter-clockwise rotation	P1	T2, T4, T5	P2, T3	T1, T8	...
	Clockwise rotation	P1	T2, T4, T8	P2, T3	T1, T5	...

Fig. 2-29

Terminal Board

Higher Nameplate Voltage

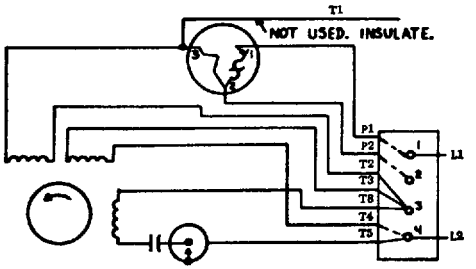

To obtain clockwise rotation, interchange leads T5 and T8

Fig. 2-30.a

Lower Nameplate Voltage

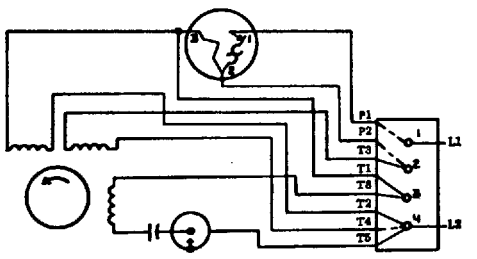

To obtain clockwise rotation, interchange leads T5 and T8.

Fig. 2-30.b

NOTE I—When terminal boards are shown, they are viewed from the front. Dotted lines indicate permanent connection.
NOTE II—Proper connection depends upon design of motor and thermal protector; refer to motor manufacturers' information for proper diagram.

Terminal Board with Links

Higher Nameplate Voltage

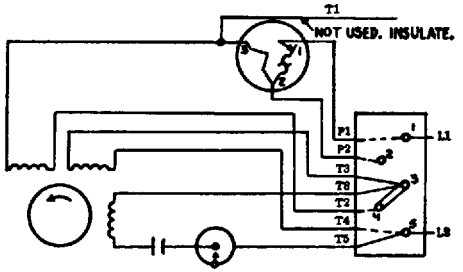

To obtain clockwise rotation, interchange leads T5 and T8.

Fig. 2-31.a

Lower Nameplate Voltage

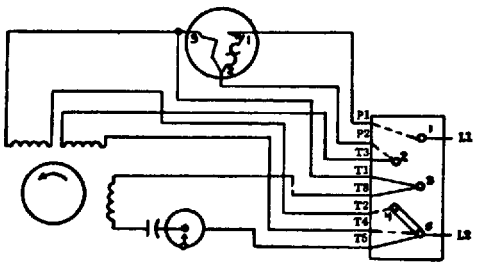

To obtain clockwise rotation, interchange leads T5 and T8.

Fig. 2-31.b

NOTE—When terminal boards are shown, they are viewed from the front. Dotted lines indicate permanent connection.

9009279 0003328 302

Copyright National Electrical Manufacturers Association
Provided by IHS under license with NEMA
No reproduction or networking permitted without license from IHS
Not for Resale

MG 1-2.48 Schematic Diagrams for Capacitor-Start Motors—Reversible—(*Continued*)

NOTE—Motor starting switch shown in running position. All directions of rotation shown are facing the end opposite the drive.

GROUP III—DOUBLE VOLTAGE—WITH THERMAL PROTECTOR

Line Leads

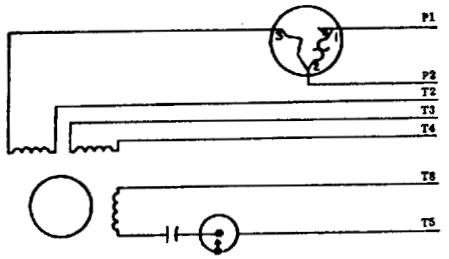

		L1	L2	Join	Insulate Separately
Higher nameplate voltage	Counter-clockwise rotation	P1	T4, T5	T2, T3, T8	P2
	Clockwise rotation	P1	T4, T8	T2, T3, T5	P2
Lower nameplate voltage	Counter-clockwise rotation	P1	T2, T4, T5	P2, T3, T8	...
	Clockwise rotation	P1	T2, T4, T8	P2, T3, T5	...

Fig. 2-32

Terminal Board

Higher Nameplate Voltage

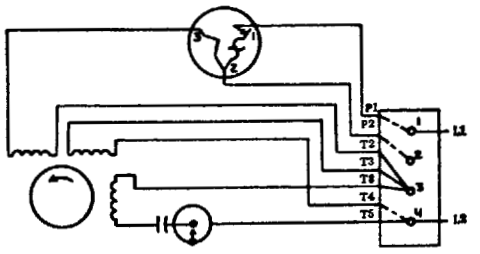

To obtain clockwise rotation, interchange leads T5 and T8.

Fig. 2-33.a

Lower Nameplate Voltage

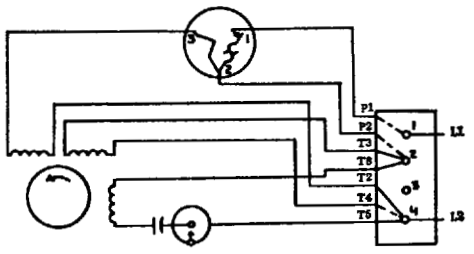

To obtain clockwise rotation, interchange leads T5 and T8.

Fig. 2-33.b

NOTE I—When terminal boards are shown, they are viewed from the front. Dotted lines indicate permanent connection.
NOTE II—Proper connection depends upon design of motor and thermal protector; refer to motor manufacturers' information for proper diagram.

Terminal Board with Links

Higher Nameplate Voltage

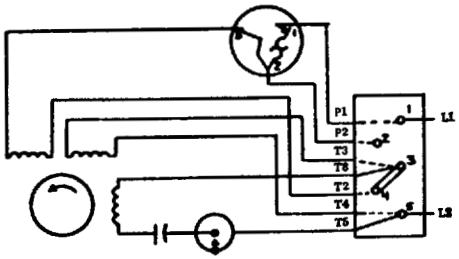

To obtain clockwise rotation, interchange leads T5 and T8.

Fig. 2-34.a

Lower Nameplate Voltage

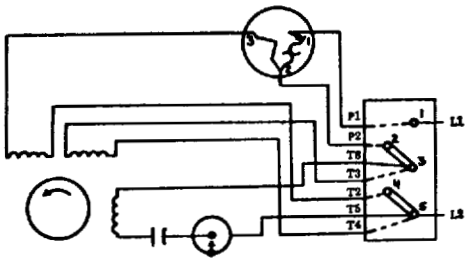

To obtain clockwise rotation, interchange leads T5 and T8.

Fig. 2-34.b

NOTE—When terminal boards are shown, they are viewed from the front. Dotted lines indicate permanent connection.

9009279 0003529 249

Copyright National Electrical Manufacturers Association
Provided by IHS under license with NEMA
No reproduction or networking permitted without license from IHS
Not for Resale

MG 1-2.49 Schematic Diagrams for Two-Value Capacitor Motors—Single Voltage—Reversible

NOTE—Motor starting switch shown in running position. All directions of rotation shown are facing the end opposite the drive.

Without Thermal Protector

Line Leads

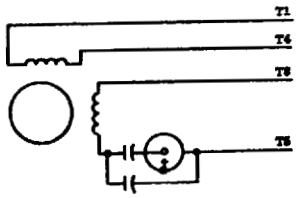

	L1	L2
Counter-clockwise rotation	T1, T8	T4, T5
Clockwise rotation	T1, T5	T4, T8

Fig. 2-35

Terminal Board

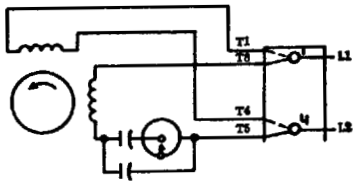

To obtain clockwise rotation, interchange leads T5 and T8.

Fig. 2-36.a

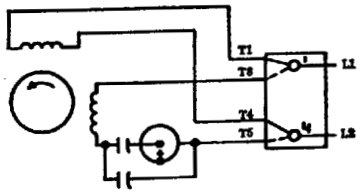

To obtain clockwise rotation, interchange leads T1 and T4.

Fig. 2-36.b

With Thermal Protector

Line Leads

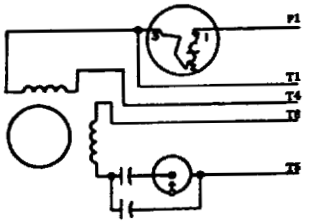

	L1	L2	Join
Counter-clockwise rotation	P1	T4, T5	T1, T8
Clockwise rotation	P1	T4, T8	T1, T5

Fig. 2-37

Terminal Board

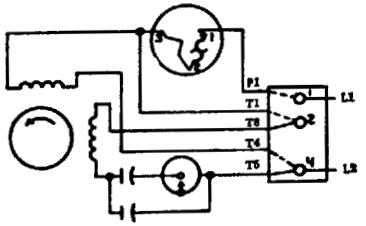

To obtain clockwise rotation, interchange leads T5 and T8.

Fig. 2-38.a

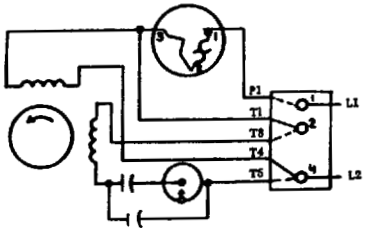

To obtain clockwise rotation, interchange leads T1 and T4.

Fig. 2-38.b

MG 1-2.50 Schematic Diagrams for Permanent-Split Capacitor Motors—Single Voltage—Reversible

NOTE I—All directions of rotation shown are facing the end opposite the drive.
NOTE II—There are other terminal markings for definite-purpose permanent-split capacitor motors; see Part 18.

Line Leads

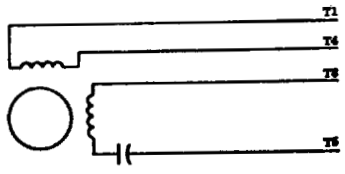

	L1	L2
Counter-clockwise rotation	T1, T8	T4, T5
Clockwise rotation	T1, T5	T4, T8

Fig. 2-39

Terminal Board

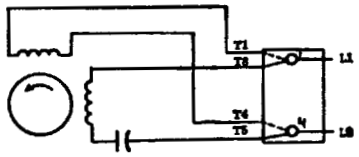

To obtain clockwise rotation, interchange leads T5 and T8.

Fig. 2-40.a

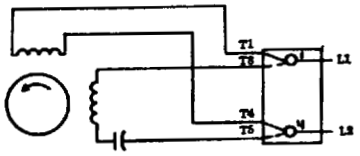

To obtain clockwise rotation, interchange leads T1 and T4.

Fig. 2-40.b

NOTE—When terminal boards are shown, they are viewed from the front. Dotted lines indicate permanent connection.

NEMA Standard 11-16-1967.

9009279 0003330 760

Copyright National Electrical Manufacturers Association
Provided by IHS under license with NEMA
No reproduction or networking permitted without license from IHS
Not for Resale

9009279 0003331 9T7

MG 1-2.51 Schematic Diagrams for Universal Motors—Single Voltage

Non-reversible

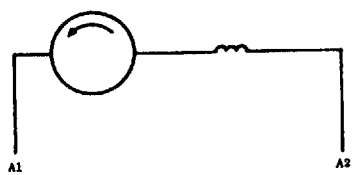

L1 to A1
L2 to A2

Fig. 2-41.a

Reversible

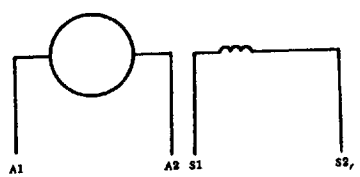

	L1	L2	Join
Counter-clockwise rotation	A1	S2	A2, S1
Clockwise rotation	A1	S1	A2, S2

Fig. 2-41.b

MG 1-2.52 Schematic Diagrams for Repulsion, Repulsion-Start Induction and Repulsion-Induction Motors

Reversible by Shifting Brushes

Single Voltage

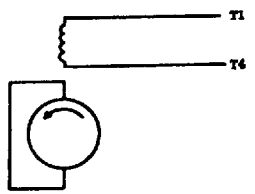

L1 to T1
L2 to T4

Fig. 2-42.a

Double Voltage

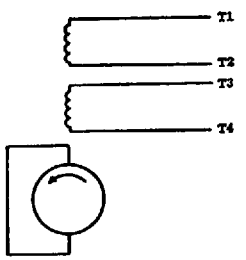

	L1	L2	Join
Higher nameplate voltage	T1	T4	T2, T3
Lower nameplate voltage	T1, T3	T2, T4	...

Fig. 2-42.b

Single Voltage—Externally Reversible

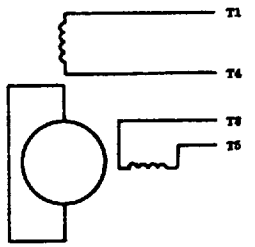

	L1	L2	Join
Counter-clockwise rotation	T1	T5	T4, T8
Clockwise rotation	T1	T8	T4, T5

Fig. 2-43.a

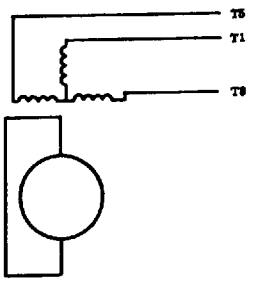

	L1	L2	Insulate
Counter-clockwise rotation	T1	T5	T8
Clockwise rotation	T1	T8	T5

Fig. 2-43.b

NEMA Standard 11-16-1967.

9009279 0003332 833

MG 1-2.53 Shaded-pole Motors—Two Speed



	L1	L2	Open
High Speed	White	Black	Red
Low Speed	White	Red	Black

Fig. 2-44

NEMA Standard 11-16-1967.

POLYPHASE INDUCTION MOTORS

MG 1-2.60 General Principles for Terminal Markings for Polyphase Induction Motors

A. The markings of the terminals of a motor serve their purpose best if they indicate the electrical relations between the several circuits within the motor. The windings of a motor are seldom accessible, and the arrangement of the terminal numbers varies with the combinations of connections which are required. However, if a definite system of numbering is used, the marking of the terminals may be made to tell the exact relations of the windings within the motor. As far as practicable, MG 1-2.61 and MG 1-2.66 are formulated to embody such a system, which system employs as one of its fundamental points a clockwise rotating spiral with T1 at the outer end and finishing with the highest number at its inner end as a means for determining the sequence of the numerals. See Fig. 2-46. The numbering of the terminals on polyphase induction motors does not imply standardization of the direction of rotation of the motor shaft.

B. For three-phase motors having two synchronous speeds obtained from a reconnectible winding, it is undesirable to adhere to the clockwise system of numbering for all terminals as this would cause the motor to run with clockwise shaft rotation on one speed and counterclockwise on the other speed if the power lines are connected to each set of terminals in the same sequence. This feature may be considered an advantage as a winding with part of its terminals following a clockwise sequence and part following a counterclockwise sequence can be recognized immediately as a two-speed motor with a reconnectible winding.

C. For two-phase motors, the terminal markings are such that all odd numbers are in one phase and all even numbers are in the other phase. The markings of all motors except those for two-speed motors using a single reconnectible winding are based, as are three-phase windings, on a clockwise spiral system of rotation in the sequence of terminal numbering.

Authorized Engineering Information 11-16-1967.

MG 1-2.61 Terminal Markings for Three-phase Single-speed Induction Motors

The terminal markings for three-phase single-speed induction motors shall be as shown in Fig. 2-51, 2-52, 2-53 and 2-54. These terminal markings were developed in accordance with the following procedure which shall be used in developing terminal markings for other combinations of motor stator circuits:

A. First

A schematic vector diagram should be drawn showing an inverted Y connection with the individual circuits in each phase arranged for series connection with correct polarity relation of circuits. The diagram for two circuits per phase, for example, is as shown in Fig. 2-45.

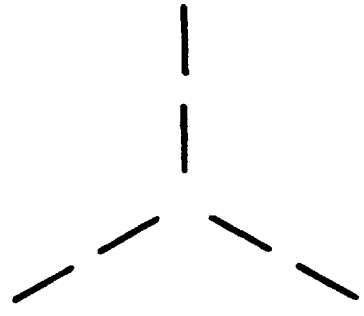

Fig. 2-45
Diagram for Two Circuits per Phase

Copyright National Electrical Manufacturers Association
Provided by IHS under license with NEMA
No reproduction or networking permitted without license from IHS
Not for Resale

9009279 0003333 77T

B. SECOND

Starting with T1 at the outside and top of the diagram, the ends of the circuit shall be numbered consecutively in a clockwise direction proceeding on a spiral towards the center of the diagram. For two circuits per phase, for example, the terminals are marked as shown in Fig. 2-46.

C. THIRD

A schematic vector diagram shall be drawn showing the particular interconnection of circuits for the motor under consideration, and the terminal markings determined in accordance with par. A and B shall be arranged to give the correct polarity relation of circuits. For example, if the winding shown in Fig. 2-46 is to be connected with two circuits in multiple per phase, the diagram and markings shall be as shown in Fig. 2-47.

D. FOURTH

The highest numbers shall be dropped and only the lowest number shall be retained where two or more terminals are permanently connected together. For example, if the winding shown in Fig. 2-47 is to have the two circuits in each phase permanently connected together with three line leads and three neutral leads brought out, the terminal markings shall be as shown in Fig. 2-48, or, if the winding shown in Fig. 2-46 is to be arranged for either a series or a multiple connection with the neutral point brought out, the vector diagram and terminal markings shall be as shown in Fig. 2-49.

E. FIFTH

Where the ends of three coils are connected together to form a permanent neutral, the terminal markings of the three leads so connected shall be dropped. If the neutral point is brought out, it shall always be marked T0. See Fig. 2-49.

F. SIXTH

If a winding is to be delta-connected, the inverted Y diagram (Fig. 2-45) shall be rotated 30 degrees counterclockwise. T1 shall be assigned to the outer end of the top leg and the balance of the numbering shall be in accordance with MG 1-2.60 and Fig. 2-46. A schematic delta shall then be constructed in which the T1 leg of the rotated Y becomes the right-hand side of the delta, the T2 leg becomes the bottom (horizontal) side, and the T3 leg becomes the left side of the delta. MG 1-2.60 shall be applied insofar as it applies to a delta connection. See Fig. 2-50.

NEMA Standard 11-16-1967.

MG 1-2.62 Terminal Markings for Y- and Delta-connected Dual-voltage Motors

Fig. 2-51 through 2-54 illustrate the application of MG 1-2.61 in determining terminal markings of Y- and delta-connected dual-voltage motors.

Authorized Engineering Information 11-16-1967.

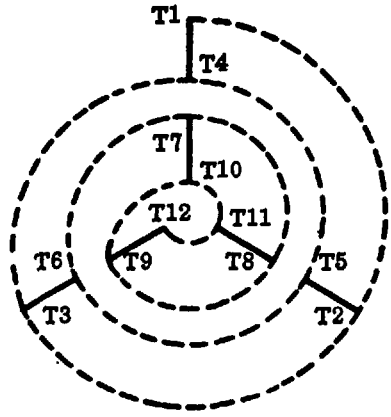

Fig. 2-46
Terminal Markings for Two Circuits per Phase

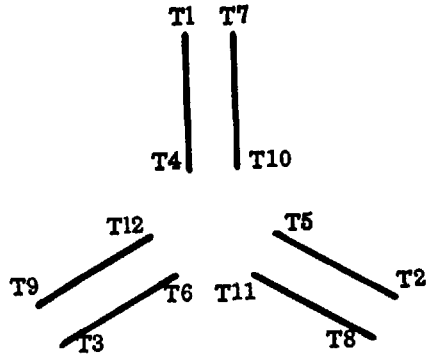

Fig. 2-47
Terminal Markings for Two Circuits in Multiple per Phase

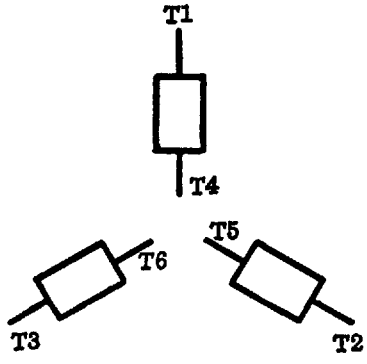

Fig. 2-48
Terminal Markings for Two Circuits in Multiple per Phase, Permanently Connected

Copyright National Electrical Manufacturers Association
Provided by IHS under license with NEMA
No reproduction or networking permitted without license from IHS
Not for Resale

9009279 0003334 606

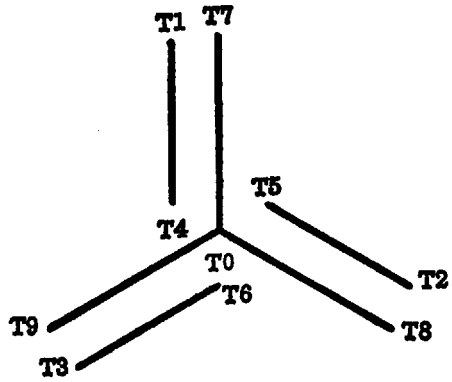

Fig. 2-49
Terminal Markings with Neutral Point Brought Out

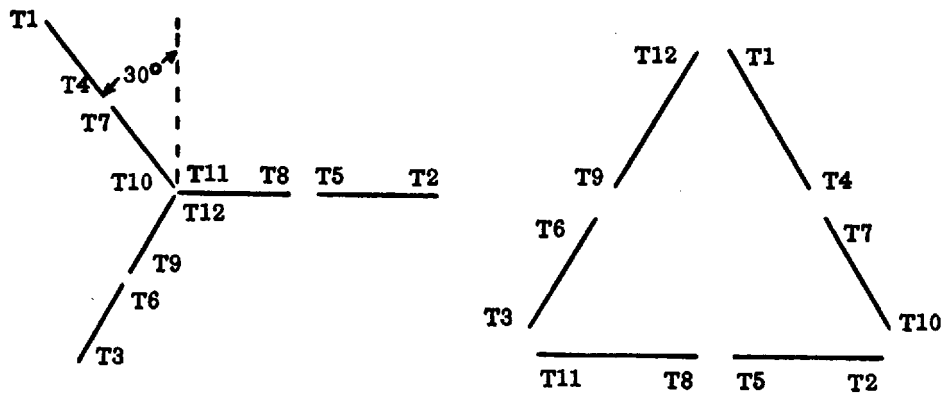

Fig. 2-50
Terminal Markings for Two Circuits per Phase, Delta Connected

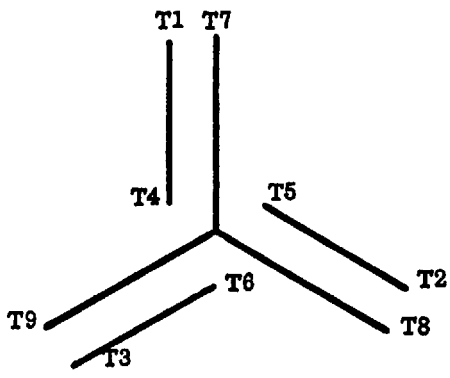

Fig. 2-51
Y-connected, Dual Voltage

Voltage	L1	L2	L3	Tie Together		
Low	(T1,T7)	(T2,T8)	(T3,T9)	...	(T4,T5,T6)	...
High	T1	T2	T3	(T4,T7)	(T5,T8)	(T6,T9)

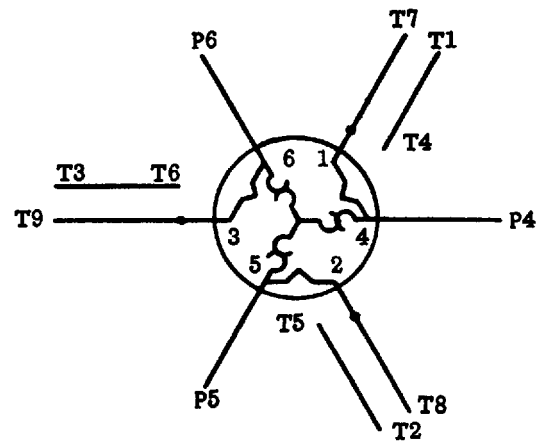

Fig. 2-52
Terminal Markings for Three-phase Dual-voltage Single-speed Induction Motors with Protector in Neutral

Volt-age	L1	L2	L3	Tie Together			Insulate Separately
Low	(T1,T7)	(T2,T8)	(T3,T9)	(T4,P4)	(T5,P5)	(T6,P6)	...
High	T1	T2	T3	(T4,T7)	(T5,T8)	(T6,T9)	P4-P5-P6

Copyright National Electrical Manufacturers Association
Provided by IHS under license with NEMA
No reproduction or networking permitted without license from IHS
Not for Resale

9009279 0003335 542

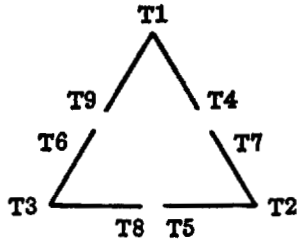

Fig. 2-53
Delta-connected, Dual Voltage

Voltage	L1	L2	L3	Tie Together		
Low	(T1,T6,T7)	(T2,T4,T8)	(T3,T5,T9)	...	...	...
High	T1	T2	T3	(T4,T7)	(T5,T8)	(T6,T9)

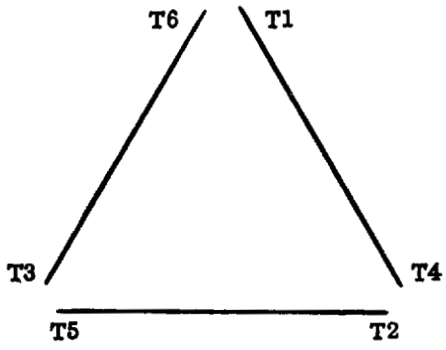

Fig. 2-54
Y-connected Start, Delta-connected Run, Single Voltage

	L1	L2	L3	Tie Together
Start	T1	T2	T3	(T4,T5,T6)
Run	(T1,T6)	(T2,T4)	(T3,T5)	...

Y-delta-connected, Dual Voltage
(Voltage Ratio $\sqrt{3}$ to 1)

	L1	L2	L3	Tie Together
High Voltage	T1	T2	T3	(T4,T5,T6)
Low Voltage	(T1,T6)	(T2,T4)	(T3,T5)	...

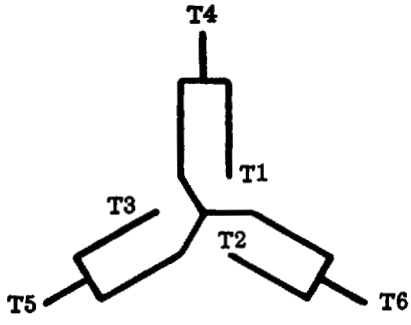

Fig. 2-55
Variable Torque Motors

Speed	L1	L2	L3	Insulate Separately	Tie Together
Low	T1	T2	T3	T4-T5-T6	...
High	T6	T4	T5	...	(T1,T2,T3)

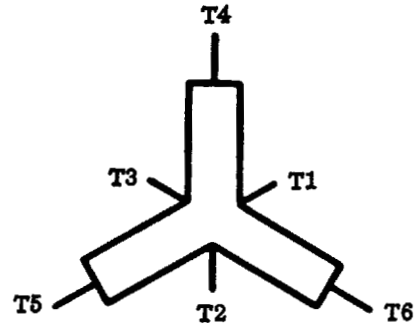

Fig. 2-56
Constant Torque Motors

Speed	L1	L2	L3	Insulate Separately	Tie Together
Low	T1	T2	T3	T4-T5-T6	...
High	T6	T4	T5	...	(T1,T2,T3)

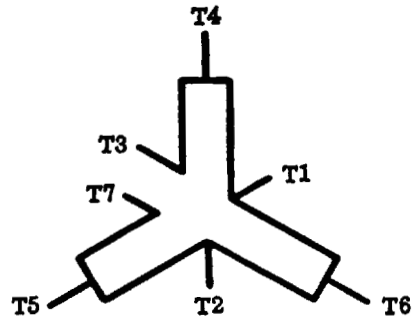

Fig. 2-57
Constant-torque Motors

Speed	L1	L2	L3	Insulate Separately	Tie Together
Low	T1	T2	(T3,T7)	T4-T5-T6	...
High	T6	T4	T5	...	(T1,T2,T3,T7)

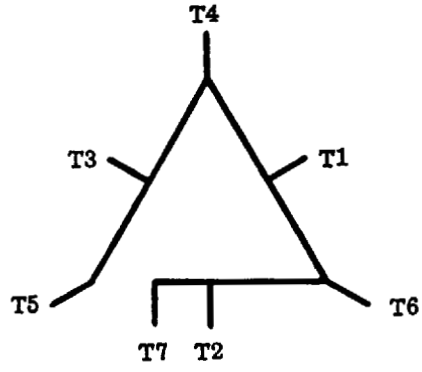

Fig. 2-58
Constant Horsepower Motors

Speed	L1	L2	L3	Insulate Separately	Tie Together
Low	T1	T2	T3	...	(T4,T5,T6,T7)
High	T6	T4	(T5,T7)	T1-T2-T3	...

Copyright National Electrical Manufacturers Association
Provided by IHS under license with NEMA
No reproduction or networking permitted without license from IHS
Not for Resale

9009279 0003336 489

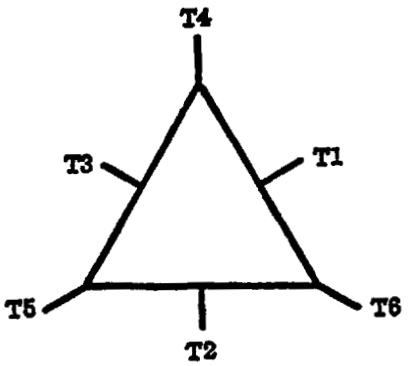

Fig. 2-59
Constant Horsepower Motors

Speed	L1	L2	L3	Insulate Separately	Tie Together
Low	T1	T2	T3	...	(T4,T5,T6)
High	T6	T4	T5	T1-T2-T3	...

MG 1-2.63 Terminal Markings for Three-phase Two-speed Single-winding Induction Motors

The general principles for terminal markings for polyphase induction motors given in par. B of MG 1-2.60 are not applicable to three-phase two-speed single-winding induction motors because, if followed and the terminals are connected in the same sequence, the direction of rotation at the two speeds will be different.

Authorized Engineering Information 11-16-1967.

MG 1-2.64 Terminal Markings for Y- and Delta-connected Two-speed Single-winding Motors

The terminal markings for Y- and delta-connected two-speed single-winding three-phase induction motors shall be in accordance with Fig. 2-55 through 2-59. The neutral terminal, if brought out, shall be marked T0 .

NEMA Standard 11-16-1967.

MG 1-2.65 Terminal Markings for Three-phase Induction Motors Having Two or More Synchronous Speeds Obtained from Two or More Independent Windings

A. Each Independent Winding Giving One Speed

The winding giving the lowest speed shall take the same terminal markings as determined from MG 1-2.61 for the particular winding used. The terminal markings for the higher speed windings shall be obtained by adding 10, 20, or 30, etc., to the terminal markings as determined from MG 1-2.61 for the particular winding used, the sequences being determined by progressing each time to the next higher speed. The terminal markings for a three-speed motor using three windings are given in Fig. 2-60.

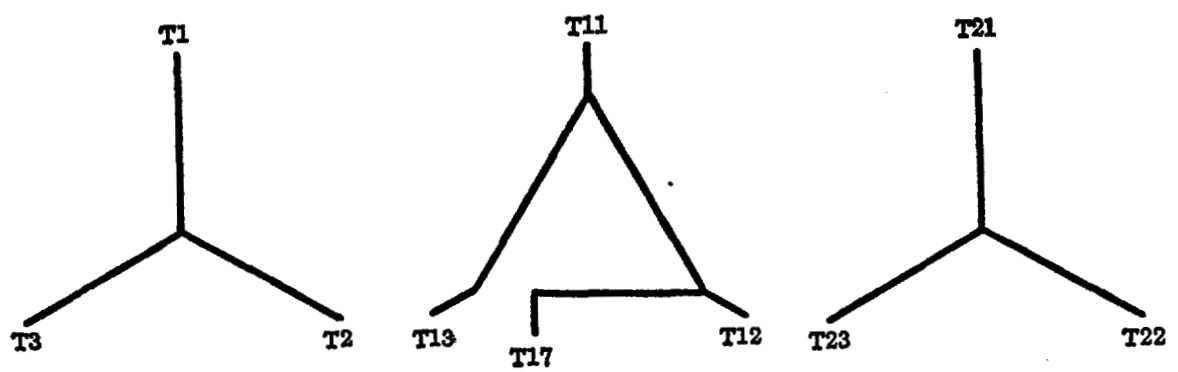

Fig. 2-60
Three-speed Motor Using Three Windings

Speed	L1	L2	L3	Insulate Separately	Tie Together
Low	T1	T2	T3	T11-T12-T13-T17-T21-T22-T23	...
Second	T11	T12	(T13,T17)	T1-T2-T3-T21-T22-T23	...
High	T21	T22	T23	T1-T2-T3-T11-T12-T13-T17	...

Copyright National Electrical Manufacturers Association
Provided by IHS under license with NEMA
No reproduction or networking permitted without license from IHS
Not for Resale

9009279 0003337 315

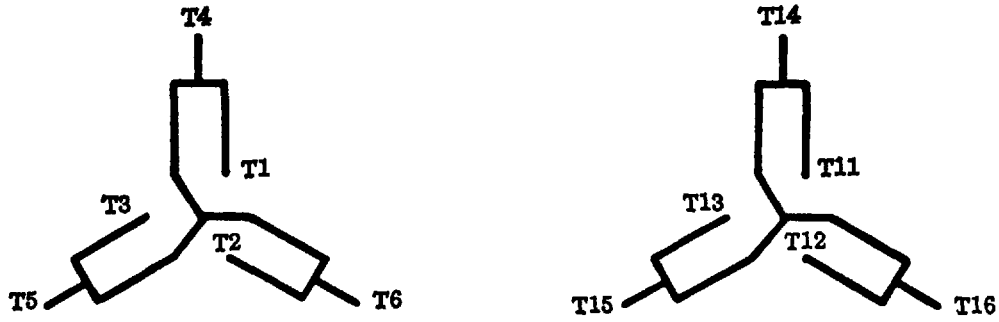

Fig. 2-61
Four-speed Motor Using Two Windings

Speed	L1	L2	L3	Insulate Separately	Tie Together
Low	T1	T2	T3	T4-T5-T6-T11-T12-T13-T14-T15-T16	...
Second	T11	T12	T13	T1-T2-T3-T4-T5-T6-T14-T15-T16	...
Third	T6	T4	T5	T11-T12-T13-T14-T15-T16	(T1,T2,T3)
High	T16	T14	T15	T1-T2-T3-T4-T5-T6	(T11,T12,T13)

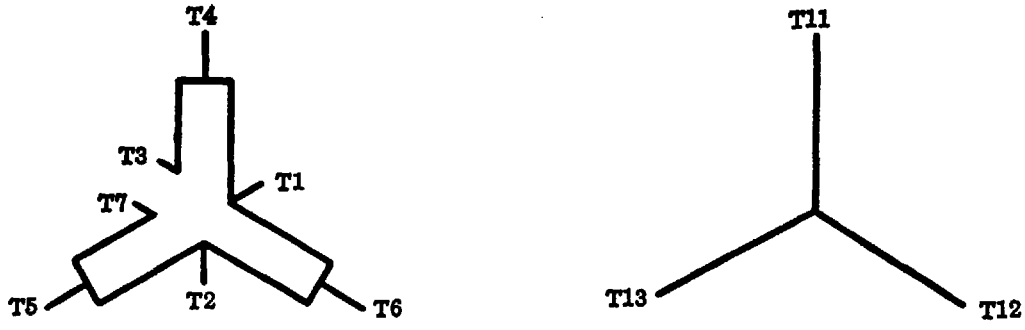

Fig. 2-62
Three-speed Motor Using Two Windings

Speed	L1	L2	L3	Insulate Separately	Tie Together
Low	T1	T2	(T3,T7)	T4-T5-T6-T11-T12-T13	...
Second	T6	T4	T5	T11-T12-T13	(T1,T2,T3,T7)
High	T11	T12	T13	T1-T2-T3-T4-T5-T6-T7	...

B. Each Independent Winding Reconnectible to Give Two Synchronous Speeds

1. *First*—Vector diagrams of the windings to be used shall be drawn and each winding given the terminal markings shown in MG 1-2.64.

2. *Second*—No change shall be made in any of the terminal markings of the winding giving the lowest speed, irrespective of whether the other speed obtained from this winding is an intermediate or the highest speed.

3. *Third*—Ten shall be added to all terminal markings of the winding giving the next higher speed, and an additional 10 shall be added to all the terminal markings for each consecutively higher speed winding. The terminal markings for a four-speed motor using two windings are given in Fig. 2-61.

C. Two or More Independent Windings at Least One of Which Gives One Synchronous Speed and the Other Winding Gives Two Synchronous Speeds

1. *First*—Each winding shall be given the markings determined in accordance with MG 1-2.61 or MG 1-2.64.
2. *Second*—No change shall be made in any of the terminal markings of the winding giving the lowest speed.
3. *Third*—Ten shall be added to all terminal markings of the winding giving the next higher speed, and an additional 10 shall be added to all the terminal markings for each consecutively higher speed winding. A typical terminal marking for a three-speed motor using two windings where one of the windings is used for the high speed only is given in Fig. 2-62.

NEMA Standard 11-16-1967.

Copyright National Electrical Manufacturers Association
Provided by IHS under license with NEMA
No reproduction or networking permitted without license from IHS
Not for Resale

9009279 0003338 251

NOTE I—If, under any of the provisions of this standard, the addition of 10, 20, 30, etc., to the basic terminal markings causes a duplication of markings due to more than nine leads being brought out on any one winding, then 20, 40, 60, etc., should be added instead of 10, 20, 30, etc., to obtain the markings for the higher speeds.

NOTE II—The illustrative figures in this standard apply when all leads are brought out on the same end of the motor. When one or more of the windings have some leads brought out on one end of the motor and some on the other end, the rotation of the terminal markings for leads brought out on one end may be shown on the diagram as shown in the illustrative figures, and the terminal markings for those brought out on the opposite end may be shown reversed in rotation. When diagrams use this reversed rotation of markings, an explanatory note should be included for the benefit of the control manufacturer and user to inform them that, when L1, L2 and L3 are connected to any winding with the same sequence of numbers (T1, T2, T3; or T4, T5, T6; or T11, T12, T13, etc.), the shaft rotation will be the same.

Authorized Engineering Information 11-16-1967.

MG 1-2.66 Two-phase Single-speed Induction Motors▲

Rescinded 7-12-1978.

MG 1-2.67 Two-speed Single-winding Two-phase Induction Motors▲

Rescinded 7-12-1978.

MG 1-2.68 Terminal Markings for Two-phase Induction Motors Having Two or More Synchronous Speeds from Two or More Independent Windings▲

Rescinded 7-12-1978.

MG 1-2.69 Terminal Markings of the Rotors of Wound-rotor Induction Motors

See Fig. 2-71.a and 2-71.b.

NEMA Standard 11-16-1967.

▲ Revised.

Copyright National Electrical Manufacturers Association
Provided by IHS under license with NEMA
No reproduction or networking permitted without license from IHS

Not for Resale

9009279 0003339 198

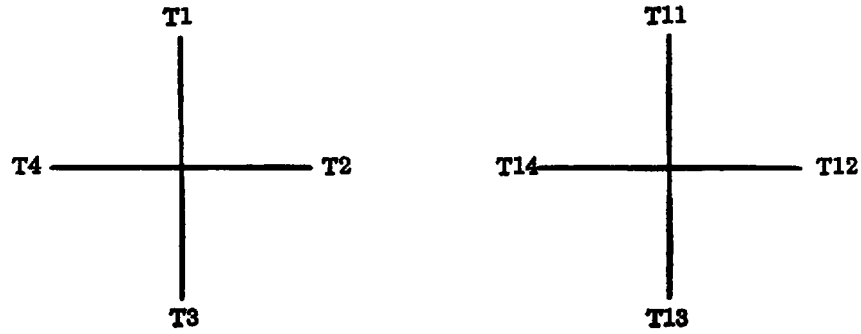

Fig. 2-68

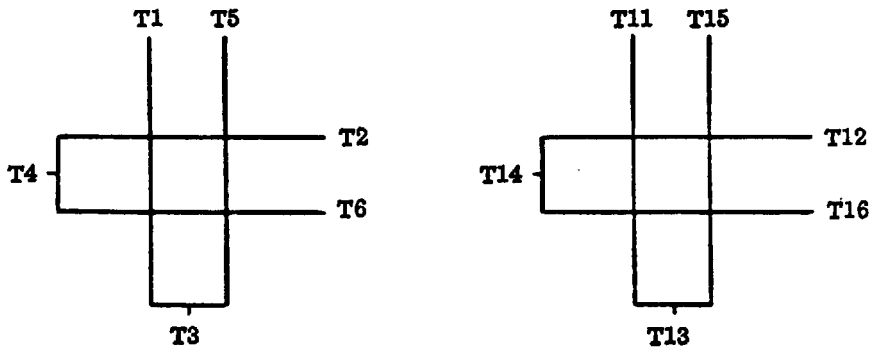

Fig. 2-69

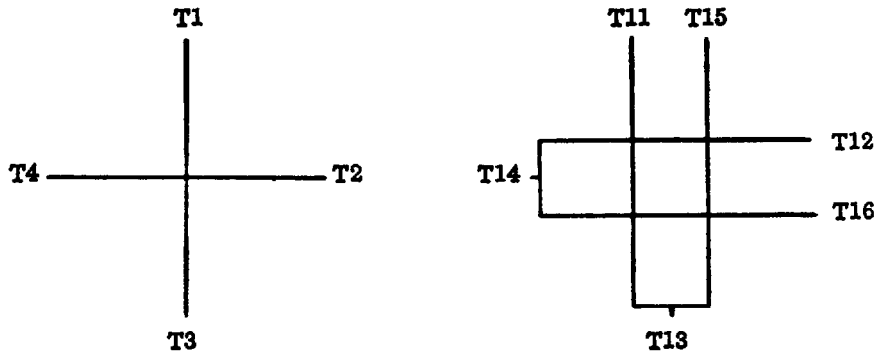

Fig. 2-70

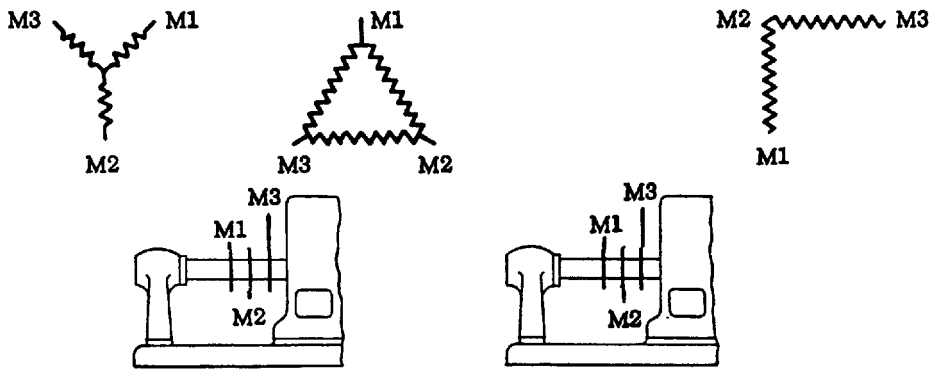

Fig. 2-71.a
Three-phase Wound Rotor

Fig. 2-71.b
Two-phase Wound Rotor

Copyright National Electrical Manufacturers Association
Provided by IHS under license with NEMA
No reproduction or networking permitted without license from IHS
Not for Resale

9009279 0003340 90T

SECTION I

STANDARDS APPLYING TO ALL MACHINES

Part 3. High-potential Tests

Copyright National Electrical Manufacturers Association
Provided by IHS under license with NEMA
No reproduction or networking permitted without license from IHS
Not for Resale

Part 3
HIGH-POTENTIAL TESTS

MG 1-3.01 High-Potential Tests

A. Safety

WARNING—Because of the high voltages used, high-potential tests should be conducted only by trained personnel, and adequate safety precautions should be taken to avoid injury to personnel and damage to property. Tested windings should be discharged carefully to avoid injury to personnel on contact. See MG 2-2.10 in the *NEMA Safety Standard for Construction and Guide for Selection, Installation and Use of Electric Motors and Generators,* Publication No. MG 2.

Authorized Engineering Information 1-15-1977.

B. Definition

High-potential tests are test which consist of the application of a voltage higher than the rated voltage for a specified time for the purpose of determining the adequacy against breakdown of insulating materials and spacings under normal conditions.

C. Procedure

High-potential tests shall be made in accordance with the latest revision of the following IEEE† Publications:

IEEE Std 112, *Test Procedure for Polyphase Induction Motors and Generators.*

IEEE Std 113, *Test Code for Direct-current Machines.*

IEEE Std 114, *Test Procedure for Single-phase Induction Motors.*

IEEE Std 115, *Test Procedure for Synchronous Machines.*

†Copies are available from the Institute of Electrical and Electronics Engineers, 345 East 47th Street, New York, NY 10017.

D. Test Voltage▲

The high-potential test shall be made by applying a test voltage having the magnitude specified in the part of this Publication No. MG 1 that applies to the specific type of machine and rating being tested.

The frequency of the test circuit shall be 50 to 60 hertz, and the effective value of the test voltage shall be the crest value of the specified test voltage divided by the square root of two. The wave shape shall have a deviation factor not exceeding 0.1.

NEMA Standard 1-15-1977.

The dielectric test should be made with a dielectric tester which will maintain the specified voltage at the terminals during the test.

When leakage current is measured (as in MG 1-12.03.a), the leakage current from the motor windings to ground or frame is made up of capacitive current and resistive current. For proper evaluation of the insulation system, the dielectric tester should have a capacitive compensating circuit so that the resistive leakage current is the value measured.

Authorized Engineering Information 3-19-1980.

E. Condition of Machine to be Tested

The winding being tested shall be completely assembled (see par. J). The test voltage shall be applied when, and only when, the machine is in good condition and the insulation resistance is not impaired due to dirt or moisture. (See the IEEE Std 43, *Recommended Practice for Testing Insulation Resistance of Rotating Machinery.)*

F. Duration of Application of Test Voltage

The specified high-potential test voltage shall be applied continuously for 1 minute. Machines for which the specified test voltage is 2500 volts or less may be tested for 1 second at a voltage which is 1.2 times the specified 1-minute test voltage as an alternative to the 1-minute test, if desired.

NEMA Standard 1-15-1977.

To avoid excessive stressing of the insulation, repeated application of the high-potential test voltage is not recommended.

Authorized Engineering Information 1-15-1977.

G. Points of Application of Test Voltage

The high-potential test voltage shall be successively applied between each electric circuit and the

▲ Revised.

Copyright National Electrical Manufacturers Association
Provided by IHS under license with NEMA
No reproduction or networking permitted without license from IHS
Not for Resale

9009279 0003342 782

frame or core. All other windings or electric circuits not under test and all external metal parts shall be connected to the frame or core. All leads of each winding, phase or electric circuit shall be connected together, whether being tested or connected to the frame or core.

An electric circuit consists of all windings and other live parts which are conductively connected to the same power supply or load bus when starting or running. A winding which may be connected to a separate power supply, transformer, or load bus any time during normal operation is considered to be a separate circuit and must be high-potential tested separately. For example, fields of direct-current machines shall be considered to be separate circuits unless they are permanently connected in the machine. Unless otherwise stated, interconnected polyphase windings are considered as one circuit and may be so tested.

H. Accessories and Components

All accessories such as surge capacitors, lightning arresters, current transformers, etc., which have leads connected to the rotating machine terminals shall be disconnected during the test, with the leads connected together and to the frame or core. These accessories shall have been subjected to the high-potential test applicable to the class of apparatus at their point of manufacture. Capacitors of capacitor-type motors must be left connected to the winding in the normal manner for machine operation (running or starting).

Component devices and their circuits such as space heaters and temperature sensing devices in contact with the winding (thermostats, thermocouples, thermistors, resistance temperature detectors, etc.),connected other than in the line circuit, shall be connected to the frame or core during machine winding high-potential tests. Each of these component device circuits, with leads connected together, shall then be tested by applying a voltage between the circuit and the frame or core, equal to twice the circuit rated voltage plus 1000 volts, or equal to the high-potential test voltage of the machine, whichever is lower. During each device circuit test all other machine windings and components shall be connected together and to the frame or core. Unless otherwise stated, the rated voltage of temperature sensing devices shall be taken as follows:

Thermostats—600 volts
Thermocouples, thermistors, RTD's—50 volts

When conducting a high-potential test on an assembled brushless exciter and synchronous machine field winding, the brushless circuit components (diodes, thyristors, etc.) shall be short circuited (not grounded) during the test.

I. Evaluation of Dielectric Failure

Insulation breakdown during the application of the high-potential test voltage shall be considered as evidence of dielectric failure, except that in the production testing of fractional-horsepower motors dielectric failure shall consist of a resistive leakage current in excess of a specified value (see MG 1-12.03.a).

J. Initial Test at Destination

When assembly of a winding is completed at the destination, thus precluding the possibility of making final high-potential tests at the factory, it is recommended that high-potential tests be made with the test voltages specified in the applicable section of this publication immediately after the final assembly and before the machine is put into service. The test voltage should be applied when, and only when, the machine is in good condition and the insulation resistance is not impaired due to dirt or moisture. (See IEEE Std 43, *Recommended Practice for Testing Insulation Resistance of Rotating Machinery.*)

K. Tests of an Assembled Group of Machines and Apparatus

Repeated application of the foregoing test voltage is not recommended. When a motor is installed in other equipment immediately after manufacture and a high-potential test of the entire assembled motor and equipment is required, the test voltage shall not exceed 85 percent of the original test voltage or, when the motor and equipment are installed in an assembled group, the test voltage shall not exceed 85 percent of the lowest test voltage specified for that group.

L. Additional Tests Made After Installation

When a high-potential test is made after installation on a new machine which has previously passed its high-potential test at the factory and whose windings have not since been disturbed, the test voltage shall be 75 percent of the test voltage specified in the part of this publication that applies to the type of machine and rating being tested.

NEMA Standard 1-5-1977, revised 1-10-1978.

Copyright National Electrical Manufacturers Association
Provided by IHS under license with NEMA
No reproduction or networking permitted without license from IHS
Not for Resale

9009279 0003343 619

SECTION I

STANDARDS APPLYING TO ALL MACHINES

Part 4. Dimensions, Tolerances, and Mounting

Copyright National Electrical Manufacturers Association
Provided by IHS under license with NEMA
No reproduction or networking permitted without license from IHS
Not for Resale

Part 4

DIMENSIONS, TOLERANCES AND MOUNTING•

MG 1-4.01 Lettering of Dimension Sheets

Dimension sheets shall be lettered in accordance with the following (also see Figs. 4-1 through 4-5).

Any letter dimension normally applying to the drive end of the machine will, when prefixed with the letter F, apply to the end opposite the drive.

Letter dimensions other than those listed below used by individual manufacturers should be designated by the prefix letter X followed by A, B, C, D, E, etc.

NEMA Letter	IEC Letter	Dimension Indicated
A	AB	Overall dimension across feet of horizontal machine (end view).
B	BB	Overall dimension across feet of horizontal machine (side view).
C	L	Overall length of single shaft extension machine. (For overall length of double shaft extension machine, see letter dimension FC.)
D	H	Centerline of shaft to bottom of feet.
E	...	Centerline of shaft to centerline of mounting holes in feet (end view). [NOTE—2E (IEC letter A) is the distance between centerlines of mounting holes in feet or base of machine (end view).]
2F	B	Distance between centerlines of mounting holes in feet or base of machine (side view).
G	HA	Thickness of mounting foot at H hole or slot.
H	K	Diameter of holes or width of slot in feet of machine.
J	AA	Width of mounting foot at mounting surface.
K	...	Length of mounting foot at mounting surface.
L	...	(No longer in use.)
M	...	(No longer in use.)
N	...	Length of shaft from end of housing to end of shaft, drive end.
O	HC	Top of horizontal machine to bottom of feet.
P	AC	Maximum width of machine (end view) including pole bolts, fins, etc., but excluding terminal housing, lifting devices, feet and outside diameter of face or flange.
▲R	G	Bottom of keyseat or flat to opposite side of shaft or bore.
S	F	Width of keyseat.
T	...	Height of eye bolt above top of machine.
U	D	Diameter of shaft extension. (For tapered shaft, this is a diameter at a distance V from the threaded portion of the shaft.)
V	...	Length of shaft available for coupling, pinion or pulley hub, drive end. (On a straight shaft extension, this is a minimum value.)
W	...	For straight and tapered shaft, end of housing to shoulder. (For shaft extensions without shoulders, it is a clearance to allow for all manufacturing variations in parts and assembly.)
X	...	Length of hub of pinion when using full length of taper, drive end.
Y	...	Distance from end of shaft to outer end of taper, drive end.
Z	...	Width across corners of nut or diameter of washer, on tapered shaft, drive end.
AA	...	Threaded or clearance hole for external conduit entrance (expressed in conduit size) to terminal housing.
AB	AD	Centerline of shaft to extreme outside part of terminal housing (end view).
AC	...	Centerline of shaft to centerline of hole AA in terminal housing (end view).
AD	...	Centerline of terminal housing mounting to centerline of hole AA (side view).
AE	...	Centerline of terminal housing mounting to bottom of feet (end view).
AF	...	Centerline of terminal housing mounting to hole AA (end view).
AG	LB	Mounting surface of face, flange or base of machine to opposite end of housing (side view).

(*Continued*)

•The material contained in Part 4 was previously contained in Part 11 and has been editorially moved to Part 4.

▲Revised.

Copyright National Electrical Manufacturers Association
Provided by IHS under license with NEMA
No reproduction or networking permitted without license from IHS
Not for Resale

9009279 0003345 491

NEMA Letter	IEC Letter	Dimension Indicated
AH	...	Mounting surface of face, flange or base of machine to end of shaft.
AJ	M	Diameter of mounting bolt circle in face, flange or base of machine.
AK	N	Diameter of male or female pilot on face, flange or base of machine.
AL	...	Overall length of sliding base or rail.
AM	...	Overall width of sliding base or outside dimensions of rails.
AN	...	Distance from centerline of machine to bottom of sliding base or rails.
AO	...	Centerline of sliding base or rail to centerline of mounting bolt holes (end view).
AP	...	Centerline of sliding base or rails to centerline of inner mounting bolt holes (motor end view).
AR	...	Distance between centerlines of mounting holes in sliding base or distance between centerlines of rail mounting bolt holes (side view).
AT	...	Thickness of sliding base or rail foot.
AU	...	Size of mounting holes in sliding base or rail.
AV	...	Bottom of sliding base or rail to top of horizontal machine.
AW	...	Centerline of rail or base mounting hole to centerline of adjacent motor mounting bolt.
AX	...	Height of sliding base or rail.
AY	...	Maximum extension of sliding base (or rail) adjusting screw.
AZ	...	Width of slide rail.
BA	C	Centerline of mounting hole in nearest foot to the shoulder on drive end shaft. (For machine without a shaft shoulder, it is the centerline of mounting hole in nearest foot to the housing side of N–W dimension.)
BB	T	Depth of male or female pilot of mounting face, flange or base of machine.
BC	R	Distance between mounting surface of face, flange or base of machine to shoulder on shaft. (For machine without a shaft shoulder, it is the distance between the mounting surface of face, flange or base of machine to housing side of N–W dimension.)
BD	P	Outside diameter of mounting face, flange or base of machine.
BE	LA	Thickness of mounting flange or base of machine.
BF	S	Threaded or clearance hole in mounting face, flange or base of machine.
BG	...	(No longer in use.)
BH	...	Outside diameter of core or shell (side view).
BJ	...	Overall length of coils (side view). Actual dimensions may be less depending on the number of poles and winding construction.
BK	...	Distance from centerline of stator to lead end of coils.
BL	...	Diameter over coils, both ends (BL = two times maximum radius).
BM	...	Overall length of stator shell.
BN	...	Diameter of stator bore.
BO	...	Length of rotor at bore.
BP	...	Length of rotor over fans.
BR	...	Diameter of finished surface or collar at ends of rotor.
BS	...	Centerline of foot mounting hole, shaft end, to centerline of terminal housing mounting (side view).
BT	...	Movement of horizontal motor on base or rail.
BU	...	Angle between centerline of terminal housing mounting and reference centerline of motor (end view).
BV	...	Centerline of terminal housing mounting to mounting surface of face or flange (side view).
BW	...	Inside diameter of rotor fan or end ring for shell-type and hermetic motors.
BX	...	Diameter of bore in top drive coupling for hollow-shaft vertical motor.
BY	...	Diameter of mounting holes in top drive coupling for hollow-shaft vertical motor.
BZ	...	Diameter of bolt circle for mounting holes in top drive coupling for hollow-shaft vertical motor.
CA	...	Rotor bore diameter.
CB	...	Rotor counterbore diameter.

(*Continued*)

Copyright National Electrical Manufacturers Association
Provided by IHS under license with NEMA
No reproduction or networking permitted without license from IHS
Not for Resale

9009279 0003346 328

NEMA Letter	IEC Letter	Dimension Indicated
CC	...	Depth of rotor counterbore.
CD	...	Distance from the top of coupling to the bottom of the base on Type P vertical motors.
CE	...	Overall diameter of mounting lugs.
CF	...	Distance from the end of the stator shell to the end of the rotor quill at compressor end. Where either the shell or quill is omitted, the dimension refers to the driven load end of the core.
CG	...	Distance from the end of the stator shell to the end of the stator coil at compressor end.
CH	...	Distance from the end of the stator shell to the end of the stator coil at end opposite the compressor.
CL	...	Distance between clamp-bolt centers for two-hole clamping of universal motor stator cores.
CO	...	Clearance hole for maximum size of clamp bolts for clamping universal motor stator cores.
DB	...	Outside diameter of rotor core.
DC	...	Distance from the end of stator shell (driven load end) to the end of rotor fan or end ring (opposite driven load end). Where the shell is omitted, the dimension is to the driven load end of the stator core.
DD	...	Distance from the end of stator shell (driven load end) to the end of rotor fan or end ring (driven load end). Where the shell is omitted, the dimension is to the driven load end of the stator core.
DE	...	Diameter inside coils, both ends (DE = 2 times minimum radius).
DF	...	Distance from driven load end of stator core or shell to centerline of mounting hole in lead clip or end of lead if no clip is used.
DG	...	Distance from driven load end of stator core or shell to end of stator coil (opposite driven load end).
▲DH	...	Centerline of foot mounting hole (shaft end) to centerline of secondary terminal housing mounting (side view).
▲DJ	...	Centerline of secondary lead terminal housing inlet to bottom of feet (horizontal).
DK	...	Centerline of machine to centerline of hole "DM" for secondary lead conduit entrance (end view).
▲DL	...	Centerline of secondary lead terminal housing inlet to entrance for conduit.
▲DM	...	Diameter of conduit (pipe size) for secondary lead terminal housing.
DN	...	Distance from the end of stator shell to the bottom of rotor counterbore (driven load end). Where the shell is omitted, the dimension is to the driven load end of the stator core.

(Continued)

CJ, CK, CM, CN, CP, CR, CS, CT, CU, CV, CW, CX, CY, CZ and DA rescinded 7-17-1973.
▲ Revised.

Copyright National Electrical Manufacturers Association
Provided by IHS under license with NEMA
No reproduction or networking permitted without license from IHS
Not for Resale

9009279 0003347 264

NEMA Letter	IEC Letter	Dimension Indicated
DO	...	Dimension between centerlines of base mounting grooves for resilient ring mounted motors or, on base drawings, the dimension of the base which fits the groove.
DP	...	Radial distance from center of Type C face at end opposite drive to center of circle defining the available area for disc brake lead opening(s).
● DQ	...	Centerline of shaft to extreme outside part of secondary terminal housing (end view).
▲ DR to EK, incl.	...	(No longer in use.)
EL	...	Diameter of shaft after emergence from the mounting surface of face or flange.
EM	...	Diameter of shaft first step after EL.
EN	...	Internal threaded portion of shaft extension.
EO	...	Top of coupling to underside of canopy of vertical hollow-shaft motor.
EP	...	Diameter of shaft at emergence from bearing (face or flange end).
EQ	...	Length of shaft from mounting surface of face or flange to EL-EM interface.
ER	...	Length of shaft from EP-EL interface to end of shaft.
ES	...	Usable length of keyseat.
ET	...	Length of shaft from mounting surface of face or flange to EM-U interface.
EU	...	Diameter of shaft at bottom of ring groove.
EV	...	Distance between centerline of H hole and end of motor foot at shaft end (side view).
EW	...	Width of the ring groove or gib head keyseat.
EX	...	Distance from end of shaft to opposite side of ring groove keyseat.
FC	...	Overall length of double shaft extension machine. (For overall length of single shaft extension machine, see letter dimension C.)

NEMA Standard 6-24-1949, revised 6-22-1950; 6-28-1951; 8-16-1951; 11-15-1951; 11-13-1952; 7-21-1954; 11-11-1954; 11-17-1955; 6-30-1958; 11-13-1958; 6-1-1959; 5-16-1963; 7-7-1965; 1-6-1966; 11-17-1966; 7-13-1967; 11-16-1967; 7-17-1968; 11-21-1968; 11-13-1969; 7-14-1971; 7-17-1973; 7-12-1978; 1-10-1979; 3-19-1980.

● Added.
▲ Editorially revised.

Copyright National Electrical Manufacturers Association
Provided by IHS under license with NEMA
No reproduction or networking permitted without license from IHS
Not for Resale

9009279 0003348 1T0

● Fig. 4-1. Lettering of Dimension Sheets for Foot-mounted Machines—Side View.

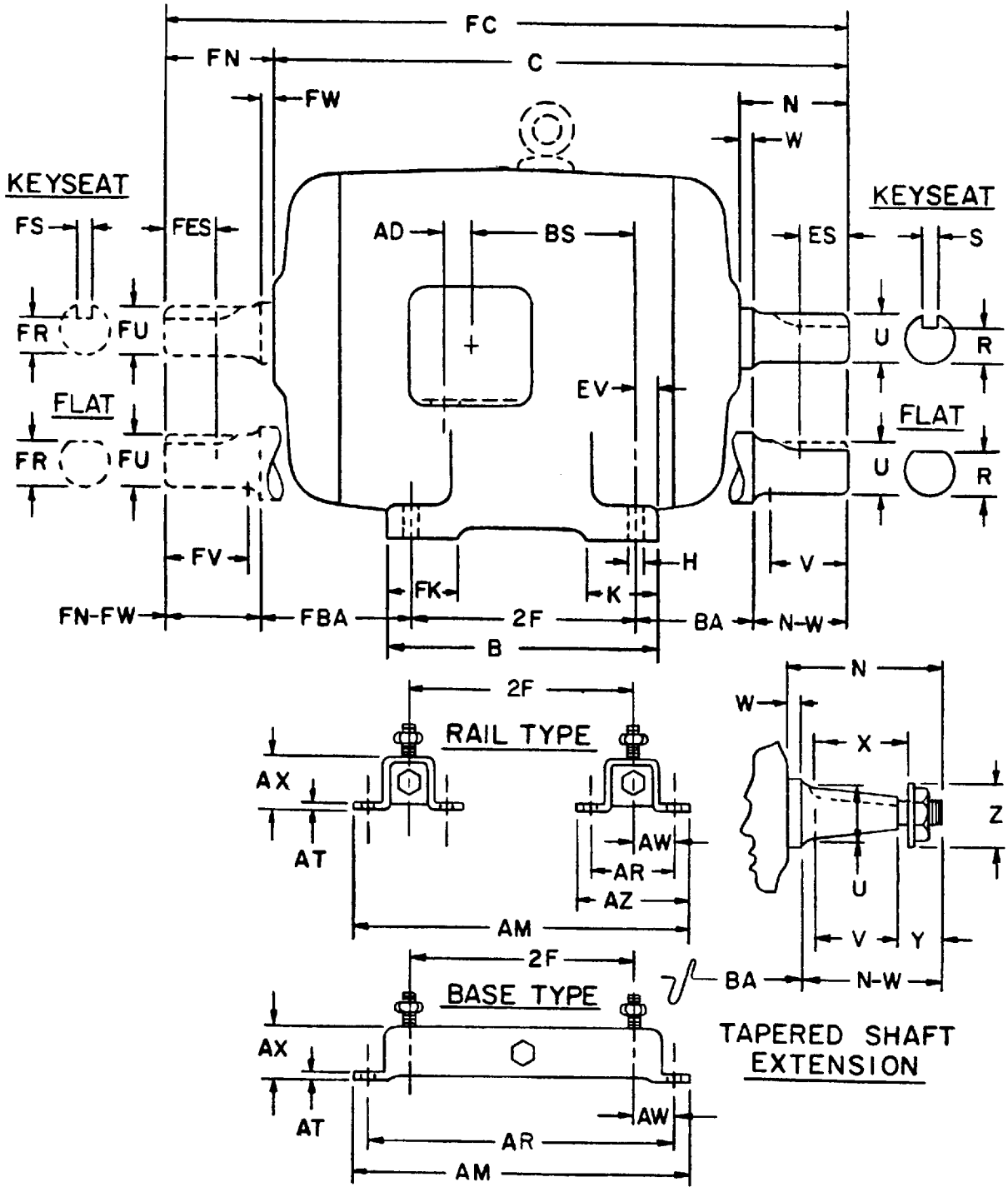

● Editorially revised.

Copyright National Electrical Manufacturers Association
Provided by IHS under license with NEMA
No reproduction or networking permitted without license from IHS
Not for Resale

9009279 0003349 037

▲Fig. 4-2. Lettering of Dimension Sheets for Foot-mounted Machines—Drive End View.

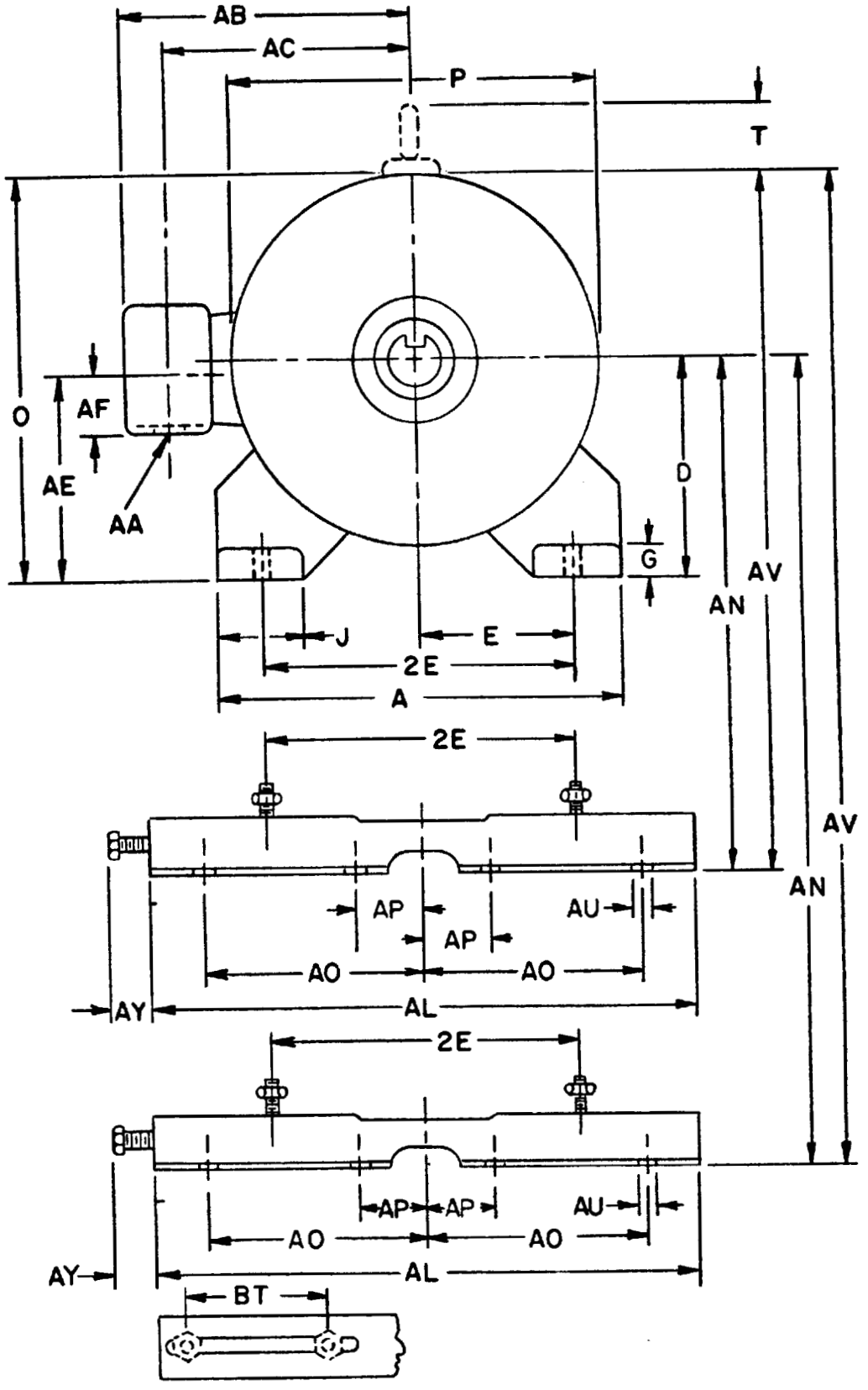

▲ Revised.

Copyright National Electrical Manufacturers Association
Provided by IHS under license with NEMA
No reproduction or networking permitted without license from IHS
Not for Resale

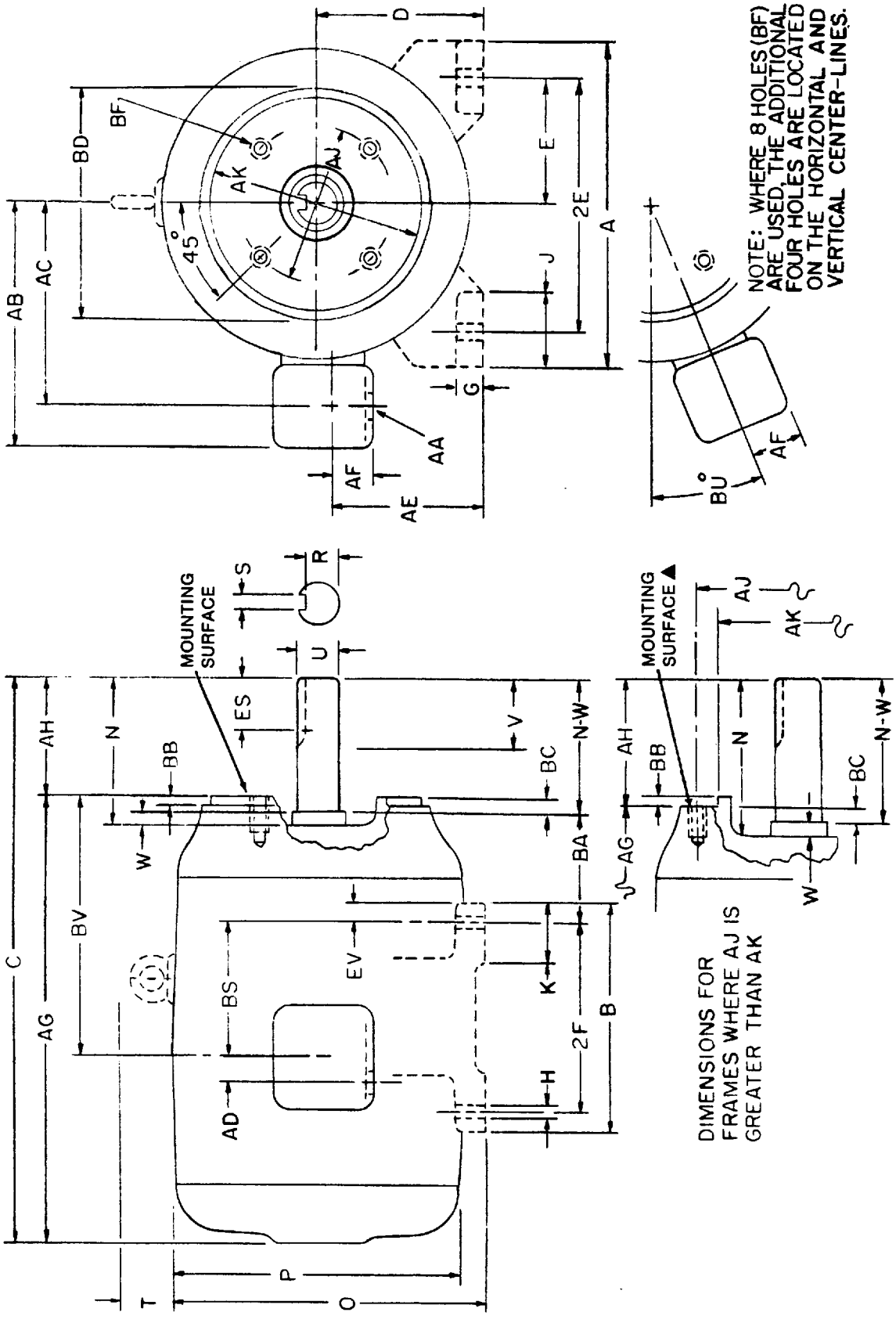

Fig. 4-3. Lettering of Dimension Sheets for Type C Face-mounted Foot or Footless Machines

▲ Editorially revised.

Copyright National Electrical Manufacturers Association
Provided by IHS under license with NEMA
No reproduction or networking permitted without license from IHS

Not for Resale

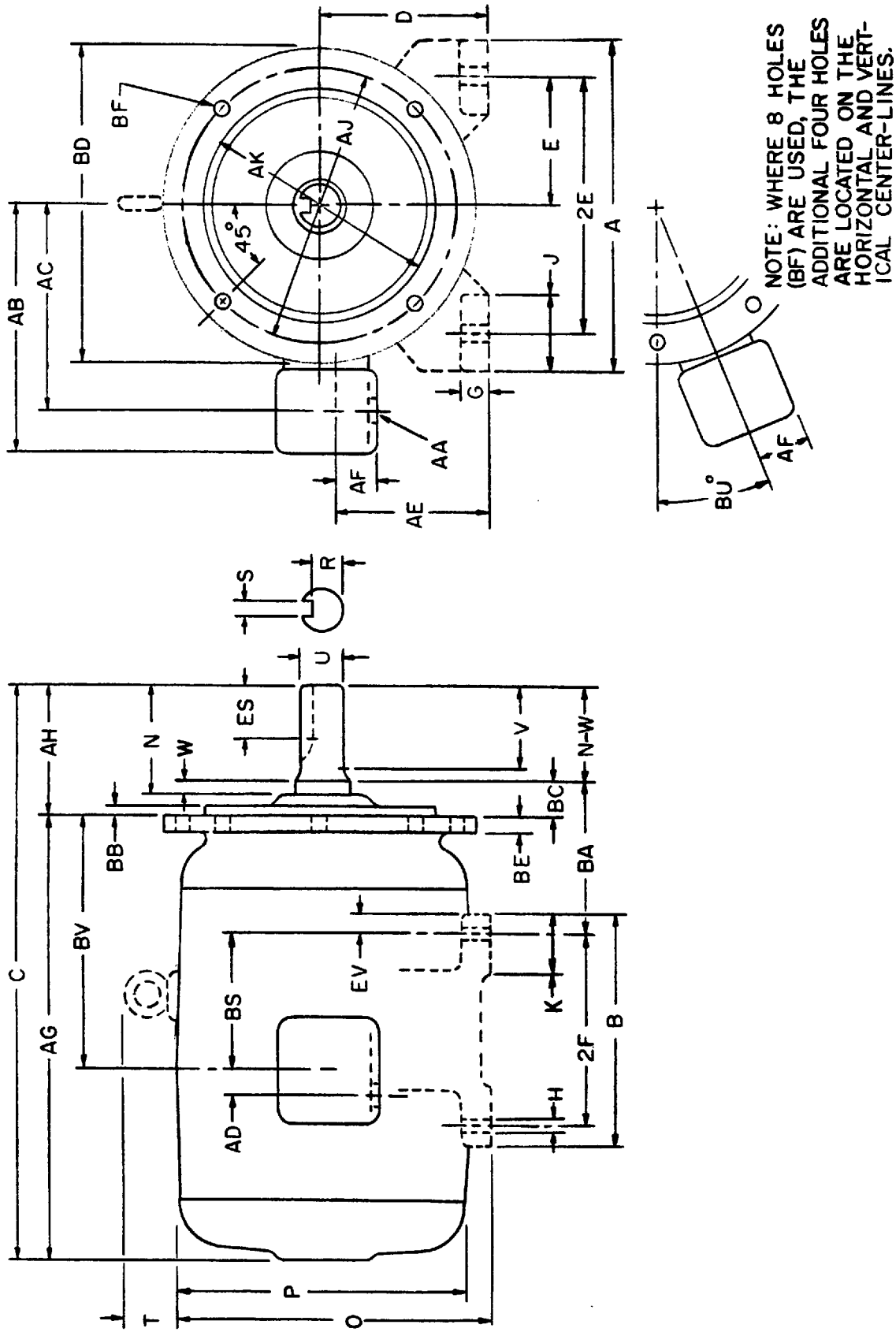

Fig. 4-4. Lettering of Dimension Sheets for Type D Flange-mounted Foot or Footless Machines.

Copyright National Electrical Manufacturers Association
Provided by IHS under license with NEMA
No reproduction or networking permitted without license from IHS

Not for Resale

9009279 0003352 621

Fig. 4-5. Lettering of Dimension Sheets for Vertical Machines.▲

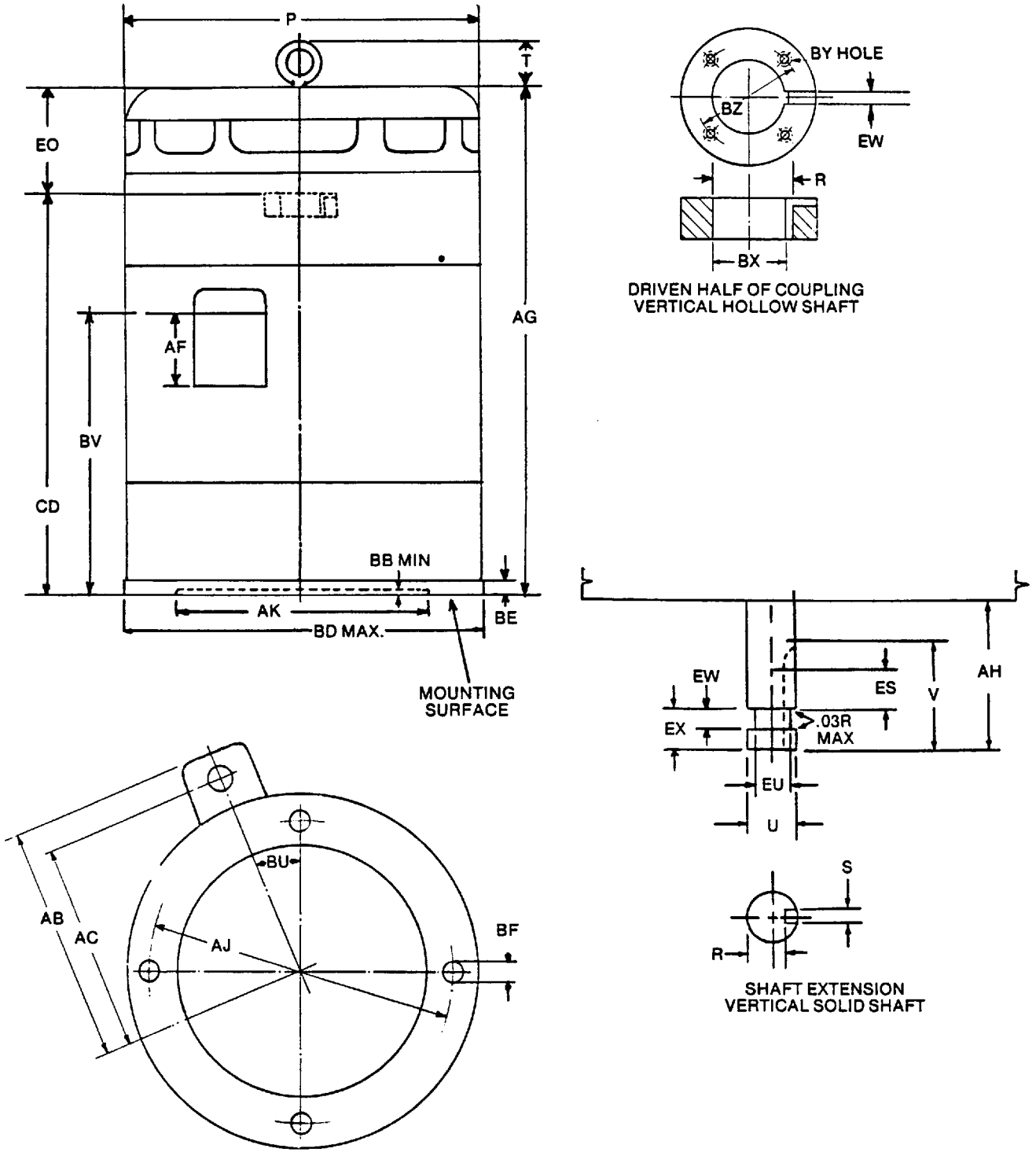

▲ Editorially revised.

Copyright National Electrical Manufacturers Association
Provided by IHS under license with NEMA
No reproduction or networking permitted without license from IHS
Not for Resale

MG 1-4.02 Motor Mounting and Terminal Housing Location

The motor mounting and location of terminal housing shall be as shown in assembly symbol F-1 of MG 1-4.03. Where other motor mountings and terminal housing locations are required, they shall be designated in accordance with the symbols shown in MG 1-4.03.

NEMA Standard 8-20-1966, revised 11-16-1967.

MG 1-4.03 Symbols for Motor and Generator Mounting Assemblies

Assembly symbols for floor, wall- and ceiling-mounted motors and generators shall be as follows:

FLOOR MOUNTINGS

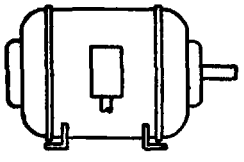

ASSEMBLY F-1
SEE MG 1-4.03

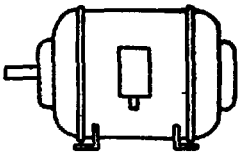

ASSEMBLY F-2

WALL MOUNTINGS

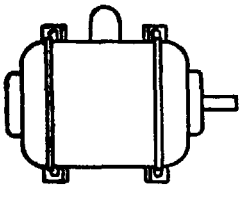

ASSEMBLY W-1

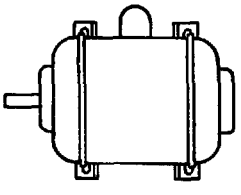

ASSEMBLY W-2

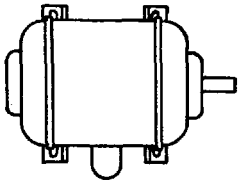

ASSEMBLY W-3

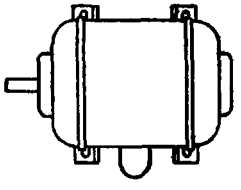

ASSEMBLY W-4

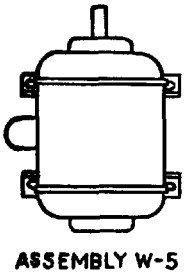

ASSEMBLY W-5

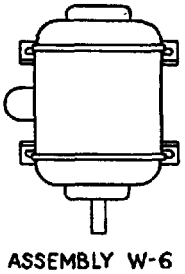

ASSEMBLY W-6

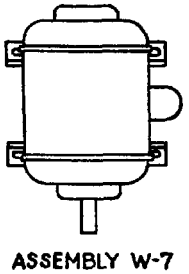

ASSEMBLY W-7

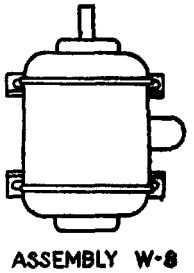

ASSEMBLY W-8

CEILING MOUNTINGS

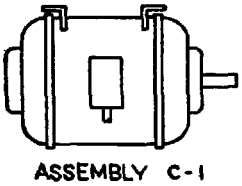

ASSEMBLY C-1

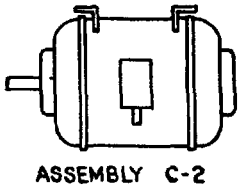

ASSEMBLY C-2

NEMA Standard 10-29-1943; revised 8-20-1966; 11-16-1967.

Assembly symbols F-1, W-2, W-3, W-6, W-8 and C-2 show the terminal housing in the same relative location with respect to the mounting feet and the shaft extension.

Authorized Engineering Information 8-20-1966.

Copyright National Electrical Manufacturers Association
Provided by IHS under license with NEMA
No reproduction or networking permitted without license from IHS

Not for Resale

9009279 0003354 4T4

MG 1-4.04 Knockout and Clearance Hole Diameters for Motor and Generator Terminal Boxes

The diameter of the knockout, excluding any projection of breakout ears or tabs, and the clearance hole in the terminal box of a motor and generator shall be in accordance with the following:

Conduit Size, Inches	Knockout or Clearance Hole Diameter, Inches		
	Nominal	Minimum	Maximum
½	0.875	0.859	0.906
¾	1.109	1.094	1.141
1	1.375	1.359	1.406
1¼	1.734	1.719	1.766
1½	1.984	1.969	2.016
2	2.469	2.453	2.500
2½	2.969	2.953	3.000
3	3.594	3.578	3.625
3½	4.125	4.094	4.156
4	4.641	4.609	4.672
5	5.719	5.688	5.750
6	6.813	6.781	6.844

Suggested Standard for Future Design 7-7-1965, reaffirmed 11-21-1968, NEMA Standard 3-14-1979.

MG 1-4.05 Tolerances on Shaft Extension Diameters and Keyseats

A. The tolerance on shaft extension diameters shall be:

Shaft Diameter, Inches	Tolerances, Inches	
	Plus	Minus
0.2500 to 1.5000, incl.	0.000	0.0005
Over 1.5000 to 6.500, incl.	0.000	0.001

B. The tolerance on the width of shaft extension keyseats shall be:

Width of Keyseat, Inches	Tolerances, Inches	
	Plus	Minus
0.188 to 0.750, incl.	0.002	0.000
Over 0.750 to 1.500, incl.	0.003	0.000

C. The tolerance from the bottom of the keyseat to the opposite side of a cylindrical shaft extension shall be +0.000 inch, −0.015 inch.

The tolerance on the depth of shaft extension keyseats for tapered shafts shall be +0.015 inch, −0.000 inch.

D. The tolerance for making keyseats parallel to the centerline of the shaft shall be:

1. For V dimensions up to and including 4.00 inches—0.002 inch.
2. For V dimensions greater than 4.00 inches up to and including 10.00 inches—0.0005 inch per inch of V dimension.
3. For V dimensions exceeding 10.00 inches—0.005 inch.

E. The tolerance on the lateral displacement of all keyseats relative to the centerline of the shaft (offset) shall be 0.010 inch.

F. The cylindrical shaft extension diameters and keyseat dimensions for square keys shall be as shown in Table 4-1.

G. The tolerance for the permissible shaft runout, when measured at the end of the shaft extension, shall be (see MG 1-4.06):

▲1. For 0.1875- to 1.625-inch diameter shafts, inclusive—0.002-inch indicator reading.
2. For over 1.625- to 6.500-inch diameter shafts, inclusive—0.003-inch indicator reading.

NOTE—Standards have not been established for shaft runouts where the shaft extension length exceeds the standard. However, runouts for shafts longer than standard are usually greater than those indicated above. (This note has been approved as Authorized Engineering Information.)

Recommended Standard 8-7-1947, revised 11-13-1952; NEMA Standard 11-12-1953, revised 11-13-1958; 11-12-1964; 11-21-1968; 7-16-1969; 5-15-1978; 7-12-1978; 3-14-1979; 3-19-1980; 1-29-1981.

TABLE 4-1
CYLINDRICAL SHAFT EXTENSION DIAMETERS AND KEYSEAT DIMENSIONS FOR SQUARE KEYS

Shaft Diameter, U Inches	Keyseat Width, S Inches	Bottom of Keyseat to Opposite Side of Cylindrical Shaft, R Inches
0.3750	Flat	0.328
0.5000	Flat	0.453
0.6250	0.188	0.517
0.7500	0.188	0.644
0.8750	0.188	0.771
1.0000	0.250	0.859
1.1250	0.250	0.986
1.2500	0.250	1.112
1.3750	0.312	1.201
1.5000	0.375	1.289
1.625	0.375	1.416
1.750	0.375	1.542
1.875	0.500	1.591
2.000	0.500	1.718
2.125	0.500	1.845
2.250	0.500	1.972
2.375	0.625	2.021
2.500	0.625	2.148
2.625	0.625	2.275
2.750	0.625	2.402
2.875	0.750	2.450
3.000	0.750	2.577
3.125	0.750	2.704
3.250	0.750	2.831
3.375	0.875	2.880
3.500	0.875	3.007
3.625	0.875	3.134
3.750	0.875	3.261
3.875	1.000	3.309
4.000	1.000	3.436
4.250	1.000	3.690
4.375	1.000	3.817
4.500	1.000	3.944
Over 4.500 to 5.500	1.250	*
Over 5.500 to 6.500	1.500	*

$$* R = \frac{U - S + \sqrt{U^2 - S^2}}{2}$$

MG 1-4.05.a Ring Groove Shaft Keyseats for Vertical Solid Shaft Motors

Dimensions and tolerances for ring groove shaft keyseats shall be in accordance with Table 4-2.

NEMA Standard 7-12-1978.

▲Revised

Copyright National Electrical Manufacturers Association
Provided by IHS under license with NEMA
No reproduction or networking permitted without license from IHS
Not for Resale

9009279 0003355 330

TABLE 4-2

U, Inches	EU, Inches	EW, Inches	EX, Inches
0.8750 through 1.0000	U-(0.1875)	0.377 0.375	0.750 0.745
1.1250 through 1.5000	U-(0.250)	0.377 0.375	0.750 0.745
1.625 through 2.500	U-(0.375)	0.377 0.375	0.750 0.745
2.625 through 4.500	U-(0.500)	0.503 0.500	1.000 0.990
4.625 through 6.000	U-(0.750)	0.755 0.750	1.500 1.485

NOTE—Tolerance on Ring Keyseat Diameter (EU)

Nominal Shaft Diameter, Inches	Tolerance, Inches
0.875 to 2.500, incl.	+0.000/−0.005
2.625 to 4.500, incl.	+0.000/−0.010
4.625 to 6.000, incl.	+0.000/−0.015

MG 1-4.06 Method of Measurement of Shaft Runout and of Eccentricity and Face Runout of Mounting Surfaces

A. SHAFT RUNOUT

The shaft runout shall be measured with the indicator stationary with respect to the motor and with its point at the end of the finished surface of the shaft. See Fig. 4-6 and 4-7 for typical fixtures.

Read the maximum and minimum values on the indicator as the shaft is rotated slowly through 360 degrees. The difference between the readings shall not exceed the specified value.

B. ECCENTRICITY AND FACE RUNOUT OF MOUNTING SURFACES

The eccentricity and face runout of the mounting surfaces shall be measured with indicators mounted on the shaft extension. The point of the eccentricity indicator shall be at approximately the middle of the rabbet surface, and the point of the face runout indicator shall be at approximately the outer diameter of the mounting face. See Fig. 4-8 for typical fixture.

Read the maximum and minimum values on the indicators as the shaft is rotated slowly through 360 degrees. The difference between the readings shall not exceed the specified value.

NOTE—On ball-bearing motors, it is recommended that the test be made with the shaft vertical to minimize the effect of bearing clearances.

NEMA Standard 11-12-1964.

MG 1-4.07 Tolerances for Type C Face-mounted and Type D Flange-mounted Motors

For Type C face-mounted and Type D flange-mounted motors, the tolerance on the mounting rabbet diameter, the maximum face runout and the maximum eccentricity of the mounting rabbet shall be as follows when measured in accordance with MG 1-4.06.

AK Dimension, Inches	Tolerance on AK Dimension, Inches		Maximum Face Runout, Inches	Maximum Permissible Eccentricity of Mounting Rabbet, Inches
	Plus	Minus		
Less than 12	0.000	0.003	0.004	0.004
12 and larger	0.000	0.005	0.007	0.007

NEMA Standard 5-17-1972.

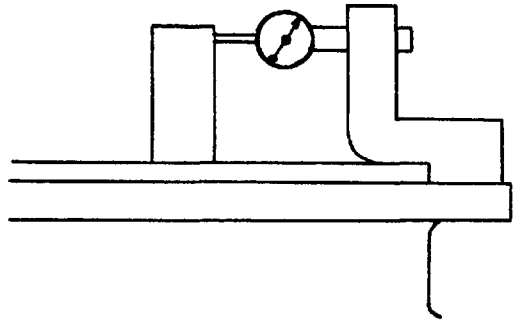

Fig. 4-6

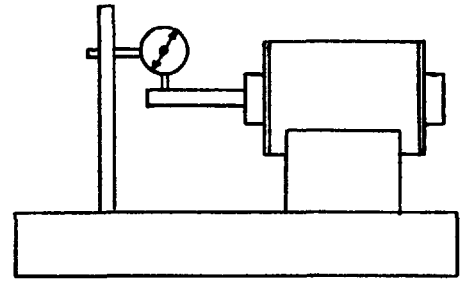

Fig. 4-7

Copyright National Electrical Manufacturers Association
Provided by IHS under license with NEMA
No reproduction or networking permitted without license from IHS
Not for Resale

9009279 0003356 277

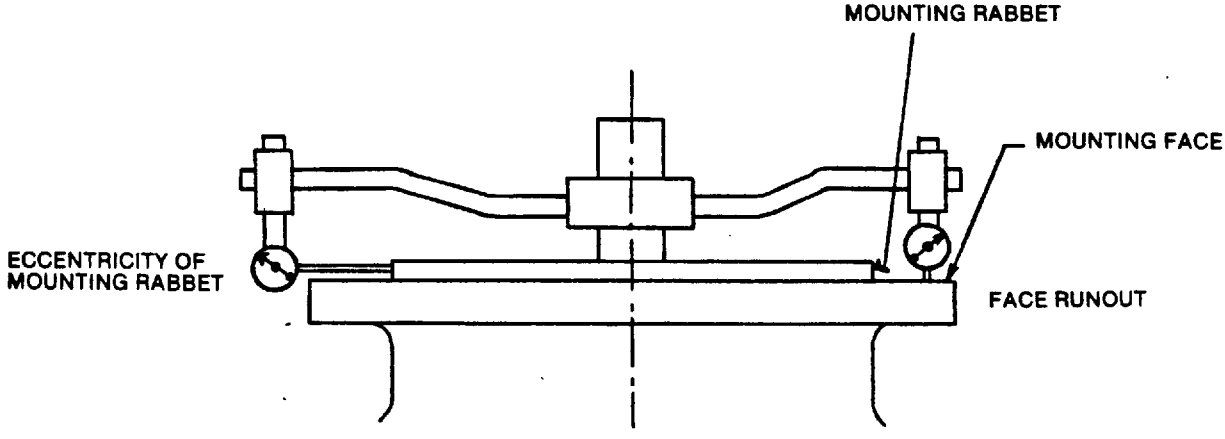

Fig. 4-8

Copyright National Electrical Manufacturers Association
Provided by IHS under license with NEMA
No reproduction or networking permitted without license from IHS

Not for Resale

9009279 0003357 103

SECTION II

FRACTIONAL- AND INTEGRAL-HORSEPOWER MACHINES

Part 10. Ratings—AC Motors

The standards in this Part 10 of Section II cover alternating-current motors up to and including the ratings built in frames corresponding to the continuous open-type ratings given in the table below:

Synchronous Speed	Motors, Squirrel-cage and Wound Rotor, Hp	Motors, Synchronous, Hp	
		Power Factor	
		Unity	0.8
3600	500	200	150
1800	500	200	150
1200	350	200	150
900	250	150	125
720	200	125	100
600	150	100	75
514	125	75	60

Copyright National Electrical Manufacturers Association
Provided by IHS under license with NEMA
No reproduction or networking permitted without license from IHS
Not for Resale

9009279 0003358 04T

Part 10

RATINGS

AC FRACTIONAL- AND INTEGRAL-HORSEPOWER MOTORS

MG 1-10.30 Voltages

1. Universal motors—115 and 230 volts.
2. Single-phase motors
   a. 60 hertz—115 and 230 volts.
   b. 50 hertz—110 and 220 volts.
3. Alternating-current polyphase motors
   a. 60 hertz—115*, 200, 230, 460, 575, 2300, 4000, 4600 and 6600 volts.
   b. Three phase, 50 hertz—220 and 380 volts.

* Applies only to motors rated 15 horsepower and smaller.
NOTE—It is not practical to build motors of all horsepower ratings for all of the standard voltages.

NEMA Standard 6-24-1949, revised 11-15-1956; 11-12-1959; 11-15-1962; 11-12-1964; 7-17-1968; 7-16-1969.

MG 1-10.31 Frequencies

A. Alternating-current Motors

The frequency shall be 50 and 60 hertz.

B. Universal Motors

The frequency shall be 60 hertz/direct current.

NOTE—Universal motors will operate successfully on all frequencies below 60 hertz and on direct current.

NEMA Standard 6-24-1949, revised 6-22-1950; 11-11-1954.

MG 1-10.32 Horsepower and Speed Ratings

A. Fractional-horsepower Induction Motors, Except Permanent-split Capacitor Motors Rated ⅓ Horsepower and Smaller and Shaded-pole Motors

The horsepower and speed ratings for fractional-horsepower induction motors rated 115 and 230 volts single phase and 115, 200* and 230 volts polyphase shall be:

* Applies to 60-hertz circuits only.

		All Motors Except Shaded Pole and Permanent-split Capacitor	Permanent-split Capacitor Motors		All Motors Except Shaded Pole and Permanent-split Capacitor	Permanent-split Capacitor Motors
Hp	60-hertz Synchronous Rpm	Approximate Rpm at Rated Load		50-hertz Synchronous Rpm	Approximate Rpm at Rated Load	
1, 1.5, 2, 3, 5, 7.5, 10, 15, 25 and 35 millihorsepower	3600 1800 1200 900	3450 1725 1140 ..	....	3000 1500 1000	2850 1425 950	....
1/20, 1/12 and 1/8 horsepower	3600 1800 1200 900	3450 1725 1140 850	....	3000 1500 1000	2850 1425 950	....
1/6, 1/4 and 1/3 horsepower	3600 1800 1200 900	3450 1725 1140 850	....	3000 1500 1000	2850 1425 950	....
1/2 horsepower	3600 1800 1200	3450 1725 1140	3250 1625 1075	3000 1500 1000	2850 1425 950	2700 1350 900
3/4 horsepower	3600 1800	3450 1725	3250 1625	3000 1500	2850 1425	2700 1350
1 horsepower	3600	3450	3250	3000	2850	2700

Copyright National Electrical Manufacturers Association
Provided by IHS under license with NEMA
No reproduction or networking permitted without license from IHS
Not for Resale

9009279 0003359 T86

B. Fractional-horsepower Induction Motors, Permanent-split Capacitor Motors Rated 1/3 Horsepower and Smaller, and Shaded-pole Motors

The horsepower and speed ratings for fractional-horsepower induction motors rated 115 and 230 volts single phase shall be:

Permanent-split Capacitor Motors

Hp	60-hertz Synchronous Rpm	Approximate Rpm at Rated Load	50-hertz Synchronous Rpm	Approximate Rpm at Rated Load
1, 1.25, 1.5, 2, 2.5, 3, 4, 5, 6, 8, 10, 12.5, 16, 20, 25, 30 and 40 millihorsepower	3600	3000	3000	2500
	1800	1550	1500	1300
	1200	1050	1000	875
	900	800		
1/20, 1/15, 1/12, 1/10, 1/8, 1/6, 1/5, 1/4 and 1/3 horsepower	3600	3250	3000	2700
	1800	1625	1500	1350
	1200	1075	1000	900
	900	825		

Shaded-pole Motors

Hp	60-hertz Synchronous Rpm	Approximate Rpm at Rated Load	50-hertz Synchronous Rpm	Approximate Rpm at Rated Load
1, 1.25, 1.5, 2, 2.5, 3, 4, 5, 6, 8, 10, 12.5, 16, 20, 25, 30 and 40 millihorsepower	1800	1550	1500	1300
	1200	1050	1000	875
	900	800		
1/20, 1/15, 1/12, 1/10, 1/8, 1/6, 1/5 and 1/4 horsepower	1800	1550	1500	1300
	1200	1050	1000	875
	900	800		

C. Single-phase Integral-horsepower Motors ▲

The horsepower and synchronous speed ratings of single-phase integral-horsepower motors rated 115 and 230 volts shall be:

Hp	60-hertz Rpm				50-hertz Rpm			
1/2	...	...	...	900	...	...	1000	750
3/4	...	...	1200	900	...	1500	1000	750
1	...	1800	1200	900	3000	1500	1000	750
1 1/2	3600	1800	1200	900	3000	1500	1000	750
2	3600	1800	1200	900	3000	1500	1000	750
3	3600	1800	1200	900	3000	1500	1000	750
5	3600	1800	1200	900	3000	1500	1000	750
7 1/2	3600	1800	1200	900	3000	1500	1000	750
10	3600	1800	1200	900	3000	1500	1000	750

▲ Revised.

Copyright National Electrical Manufacturers Association
Provided by IHS under license with NEMA
No reproduction or networking permitted without license from IHS
Not for Resale

9009279 0003360 7T8

D. POLYPHASE INTEGRAL-HORSEPOWER INDUCTION MOTORS

The horsepower and synchronous speed ratings of polyphase integral-horsepower induction motors shall be:

Hp	60 hertz Rpm							50 hertz Rpm			
½	...	...	...	900	720	600	514	...	...	...	750
¾	...	...	1200	900	720	600	514	...	...	1000	750
1	...	1800	1200	900	720	600	514	...	1500	1000	750
1½	3600*	1800	1200	900	720	600	514	3000*	1500	1000	750
2	3600*	1800	1200	900	720	600	514	3000*	1500	1000	750
3	3600*	1800	1200	900	720	600	514	3000*	1500	1000	750
5	3600*	1800	1200	900	720	600	514	3000*	1500	1000	750
7½	3600*	1800	1200	900	720	600	514	3000*	1500	1000	750
10	3600*	1800	1200	900	720	600	514	3000*	1500	1000	750
15	3600*	1800	1200	900	720	600	514	3000*	1500	1000	750
20	3600*	1800	1200	900	720	600	514	3000*	1500	1000	750
25	3600*	1800	1200	900	720	600	514	3000*	1500	1000	750
30	3600*	1800	1200	900	720	600	514	3000*	1500	1000	750
40	3600*	1800	1200	900	720	600	514	3000*	1500	1000	750
50	3600*	1800	1200	900	720	600	514	3000*	1500	1000	750
60	3600*	1800	1200	900	720	600	514	3000*	1500	1000	750
75	3600*	1800	1200	900	720	600	514	3000*	1500	1000	750
100	3600*	1800	1200	900	720	600	514	3000*	1500	1000	750
125	3600*	1800	1200	900	720	600	514	3000*	1500	1000	750
150	3600*	1800	1200	900	720	600	...	3000*	1500	1000	750
200	3600*	1800	1200	900	720	...	...	3000*	1500	1000	750
250	3600*	1800	1200	900	...	...	...	3000*	1500	1000	750
300	3600*	1800	1200	...	...	...	...	3000*	1500	1000	...
350	3600*	1800	1200	...	...	...	...	3000*	1500	1000	...
400	3600*	1800	...	...	...	...	...	3000*	1500	...	...
450	3600*	1800	...	...	...	...	...	3000*	1500	...	...
500	3600*	1800	...	...	...	...	...	3000*	1500	...	...

* Applies to squirrel-cage motors only.
NOTE—For frame assignments, see Publication No. MG 13.

E. UNIVERSAL MOTORS

Horsepower ratings shall be 10, 15, 25 and 35 millihorsepower and 1/20, 1/12, 1/8, 1/6, 1/4, 1/3, 1/2, 3/4 and 1 horsepower at a rated speed of 5000 rpm or above.

NOTE—At speeds less than 5000 rpm, there will be a marked difference in performance characteristics between operation on alternating current and operation on direct current.

Recommended Standard 6-24-1949, revised 11-17-1949; 6-22-1950, NEMA Standard 6-28-1951, revised 11-13-1952; 11-11-1954; 11-12-1959; 11-15-1962; 8-20-1966; 11-17-1966; 7-16-1969; 7-14-1971; 9-20-1978.

MG 1-10.32.a Horsepower Ratings of Multispeed Motors

The horsepower rating of multispeed motors shall be selected as follows:

A. CONSTANT HORSEPOWER

The horsepower rating for each rated speed shall be selected from MG 1-10.32.

B. CONSTANT TORQUE

The horsepower rating for the highest rated speed shall be selected from MG 1-10.32. The horsepower rating for each lower speed shall be determined by multiplying the horsepower rating at the highest speed by the ratio of the lower synchronous speed to the highest synchronous speed.

C. VARIABLE TORQUE

The horsepower rating for the highest rated speed shall be selected from MG 1-10.32. The horsepower rating for each lower speed shall be determined by multiplying the horsepower rating at the highest speed by the square of the ratio of the lower synchronous speed to the highest synchronous speed.

NEMA Standard 7-17-1974.

Copyright National Electrical Manufacturers Association
Provided by IHS under license with NEMA
No reproduction or networking permitted without license from IHS
Not for Resale

9009279 0003361 634

MG 1-10.33 Basis of Horsepower Rating

A. The horsepower rating of a fractional- or integral-horsepower, single-phase induction motor is based upon breakdown torque (see MG 1-1.49). The value of breakdown torque to be expected by the user for any horsepower and speed shall fall within the range given in Tables 10-1 and 10-2.

TABLE 10-1
INDUCTION MOTORS, EXCEPT SHADED-POLE AND PERMANENT-SPLIT CAPACITOR MOTORS

60	50	60	50–25	60	50	60	50–25		Frequencies, hertz
3600	3000	1800	1500	1200	1000	900	750		Synchronous Speeds, Rpm
3450†	2850†	1725†	1425†	1140†	950†	850†	.....	Hp	Fractional-horsepower Nominal Speeds, Rpm
								Millihp	
0.35–0.55	0.42–0.66	0.7–1.1	0.85–1.3	1.1–1.65	.....	.....	..	1	
0.55–0.7	0.66–0.85	1.1–1.45	1.3–1.75	1.65–2.2	.....	.....	..	1.5	The figures at left are for motors rated less than $\frac{1}{20}$ horsepower. Breakdown torques in oz-in.
0.7–1.1	0.85–1.3	1.45–2.2	1.75–2.6	2.2–3.3	.....	.....	..	2	
1.1–1.8	1.3–2.2	2.2–3.6	2.6–4.3	3.3–5.4	.....	.....	..	3	
1.8–2.7	2.2–3.2	3.6–5.4	4.3–6.6	5.4–8.1	.....	.....	..	5	
2.7–3.6	3.2–4.3	5.4–7.2	6.6–8.6	8.1–11	.....	.....	..	7.5	
3.6–5.5	4.3–6.6	7.2–11	8.6–13	11–17	.....	.....	..	10	
5.5–9.5	6.6–11.4	11–19	13–23	17–29	.....	.....	..	15	
9.5–15	11.4–18	19–30	23–36	29–46	.....	.....	..	25	
15–24	18–28.8	30–48	36–57.6	46–72	.....	.....	..	35	
								Hp	The figures at left are for fractional-hp motors. Breakdown torques in oz-ft.
2.0– 3.7	2.4– 4.4	4.0– 7.1	4.8– 8.5	6.0–10.4	7.2–12.4	8.0–13.5	..	$\frac{1}{20}$	
3.7– 6.0	4.4– 7.2	7.1–11.5	8.5–13.8	10.4–16.5	12.4–19.8	13.5–21.5	..	$\frac{1}{12}$	
6.0– 8.7	7.2–10.5	11.5–16.5	13.8–19.8	16.5–24.1	19.8–28.9	21.5–31.5	..	$\frac{1}{8}$	
8.7–11.5	10.5–13.8	16.5–21.5	19.8–25.8	24.1–31.5	28.9–37.8	31.5–40.5	..	$\frac{1}{6}$	
11.5–16.5	13.8–19.8	21.5–31.5	25.8–37.8	31.5–44.0	37.8–53.0	40.5–58.0	..	$\frac{1}{4}$	
16.5–21.5	19.8–25.8	31.5–40.5	37.8–48.5	44.0–58.0	53.0–69.5	58.0–77.0	..	$\frac{1}{3}$	
21.5–31.5	25.8–37.8	40.5–58.0	48.5–69.5	58.0–82.5	69.5–99.0	*	•	$\frac{1}{2}$	
31.5–44.0	37.8–53.0	58.0–82.5	69.5–99.0	5.16– 6.9	•	*	*	$\frac{3}{4}$	The figures at the left are for integral-horsepower motors. Breakdown torques in lb-ft.
44.0–58.0	53.0–69.5	5.16– 6.8	6.19– 8.2	6.9– 9.2	*	*	*	1	
3.6– 4.6	4.3– 5.5	6.8–10.1	8.2–12.1	9.2–13.8	•	*	•	$1\frac{1}{2}$	
4.6– 6.0	5.5– 7.2	10.1–13.0	12.1–15.6	13.8–18.0	*	*	•	2	
6.0– 8.6	7.2–10.2	13.0–19.0	15.6–22.8	18.0–25.8	*	*	*	3	
8.6–13.5	10.2–16.2	19.0–30.0	22.8–36.0	25.8–40.5	*	*	*	5	
13.5–20.0	16.2–24.0	30.0–45.0	36.0–54.0	40.5–60.0	*	*	•	$7\frac{1}{2}$	
20.0–27.0	24.0–32.4	45.0–60.0	54.0–72.0	*	*	*	•	10	

• These are ratings for which no torque values have been established.

† These approximate full-load speeds apply only for fractional-horsepower motor ratings.

NOTE I—The breakdown torque range includes the higher figure down to, but not including, the lower figure.

NOTE II—The horsepower rating of motors designed to operate on two or more frequencies shall be determined by the torque at the highest rated frequency.

Copyright National Electrical Manufacturers Association
Provided by IHS under license with NEMA
No reproduction or networking permitted without license from IHS
Not for Resale

9009279 0003362 570

Table 10-2

SHADED-POLE AND PERMANENT-SPLIT CAPACITOR MOTORS FOR FAN AND PUMP APPLICATIONS▲

(For permanent-split capacitor hermetic motors, see MG 1-18.081.)

60	50	60	50	60		Frequencies, hertz
1800	1500	1200	1000	900		Synchronous Speeds, Rpm
See MG 1-10.32, Par. A and B					Hp	Approximate Full-load Speeds, Rpm
					Millihp	
0.89–1.1	1.1–1.3	1.3–1.6	1.6–1.9	1.7–2.1	1	The figures at left are breakdown torques in oz-in.
1.1–1.4	1.3–1.7	1.6–2.1	1.9–2.5	2.1–2.7	1.25	
1.4–1.7	1.7–2.0	2.1–2.5	2.5–3.0	2.7–3.3	1.5	
1.7–2.1	2.0–2.5	2.5–3.1	3.0–3.7	3.3–4.1	2	
2.1–2.6	2.5–3.1	3.1–3.8	3.7–4.6	4.1–5.0	2.5	
2.6–3.2	3.1–3.8	3.8–4.7	4.6–5.7	5.0–6.2	3	
3.2–4.0	3.8–4.8	4.7–5.9	5.7–7.1	6.2–7.8	4	
4.0–4.9	4.8–5.8	5.9–7.2	7.1–8.7	7.8–9.5	5	
4.9–6.2	5.8–7.4	7.2–9.2	8.7–11.0	9.5–12.0	6	
6.2–7.7	7.4–9.2	9.2–11.4	11.0–13.6	12.0–14.9	8	
7.7–9.6	9.2–11.4	11.4–14.2	13.6–17.0	14.9–18.6	10	
9.6–12.3	11.4–14.7	14.2–18.2	17.0–21.8	18.6–23.8	12.5	
12.3–15.3	14.7–18.2	18.2–22.6	21.8–27.1	23.8–29.6	16	
15.3–19.1	18.2–22.8	22.6–28.2	27.1–33.8	29.6–37.0	20	
19.1–23.9	22.8–28.5	28.2–35.3	33.8–42.3	37.0–46.3	25	
23.9–30.4	28.5–36.3	35.3–44.9	42.3–53.9	46.3–58.9	30	
30.4–38.3	36.3–45.6	44.9–56.4	53.9–68.4	58.9–74.4	40	
					Hp	
3.20–4.13	3.80–4.92	4.70–6.09	5.70–7.31	6.20–8.00	1/20	The figures at left are breakdown torques in oz-ft.
4.13–5.23	4.92–6.23	6.09–7.72	7.31–9.26	8.00–10.1	1/15	
5.23–6.39	6.23–7.61	7.72–9.42	9.26–11.3	10.1–12.4	1/12	
6.39–8.00	7.61–9.54	9.42–11.8	11.3–14.2	12.4–15.5	1/10	
8.00–10.4	9.54–12.4	11.8–15.3	14.2–18.4	15.5–20.1	1/8	
10.4–12.7	12.4–15.1	15.3–18.8	18.4–22.5	20.1–24.6	1/6	
12.7–16.0	15.1–19.1	18.8–23.6	22.5–28.3	24.6–31.0	1/5	
16.0–21.0	19.1–25.4	23.6–31.5	28.3–37.6	31.0–41.0	1/4	
21.0–31.5	25.4–37.7	31.5–47.0	37.6–56.5	41.0–61.0	1/3	
31.5–47.5	37.7–57.3	47.0–70.8	56.5–84.8	3.81–5.81	1/2	The figures at left are breakdown torques in lb-ft.
47.5–63.5	57.3–76.5	4.42–5.88	5.30–7.06	5.81–7.62	3/4	
3.97–5.94	4.78–7.06	5.88–8.88	7.06–10.6	7.62–11.6	1	
5.94–7.88	7.06–9.56	8.88–11.8	10.6–14.1	11.6–15.2	1½	

NOTE I—The breakdown torque range includes the higher figure down to, but not including, the lower figure.
NOTE II—The horsepower rating of motors designed to operate on two or more frequencies shall be determined by the torque at the highest rated frequency.

B. The breakdown torque which determines the horsepower rating is that obtained in a test when the temperature of the winding and other parts of the machine are at approximately 25°C at the start of the test.

C. The minimum value of breakdown torque obtained in the manufacture of any design will determine the rating of that design. Tolerances in manufacturing will result in individual motors having breakdown torque from 100 percent to approximately 115 percent (125 percent for motors rated in millihorsepower and for all shaded-pole motors) of the value on which the rating is based, but this excess torque shall not be relied upon by the user in applying the motor to its load.

NEMA Standard 6-24-1949, revised 6-28-1951; 11-11-1954; 11-14-1957; 11-15-1962; 8-20-1966; 1-29-1981.

▲ Title revised.

Copyright National Electrical Manufacturers Association
Provided by IHS under license with NEMA
No reproduction or networking permitted without license from IHS
Not for Resale

9009279 0003363 407

MG 1-10.34 Secondary Data for Wound-rotor Motors

Hp	Secondary Volts*	Maximum Secondary, Amperes
1	90	6
1½	110	7.3
2	120	8.4
3	145	10
5	140	19
7½	165	23
10	195	26.5
15	240	32.5
20	265	38
25	220	60
30	240	65

NEMA Standard 11-16-1967.

40	315	60
50	350	67
60	375	74
75	385	90
100	360	130
125	385	150
150	380	185

* Tolerance—plus or minus 10 percent.

Suggested Standard for Future Design 11-17-1955, revised 11-13-1958; 11-17-1960, reaffirmed 8-19-1964; 11-16-1967, revised 9-20-1968; 11-13-1969, NEMA Standard 3-14-1979.

MG 1-10.35 Time Ratings for Single-phase and Polyphase Induction Motors

The time ratings for single-phase and polyphase induction motors shall be 5, 15, 30 and 60 minutes and continuous.

All short-time ratings are based upon a corresponding short-time load test which shall commence only when the winding and other parts of the machine are within 5 °C of the ambient temperature at the time of the starting of the test.

NEMA Standard 11-17-1960, revised 11-12-1964; 7-14-1971.

MG 1-10.36 Code Letters for Locked-rotor kVA—Nameplate Markings

A. The nameplate of every alternating-current motor, except a polyphase wound-rotor motor, rated 1/20 horsepower and larger shall be marked with the caption "Code" followed by a letter selected from the table in par. B to show the locked-rotor kVA per horsepower.

B. The letter designations for locked-rotor kVA per horsepower as measured at full voltage and rated frequency are as follows:

Letter Designation	kVA per Horsepower*	Letter Designation	kVA per Horsepower*
A	0–3.15	K	8.0– 9.0
B	3.15–3.55	L	9.0–10.0
C	3.55–4.0	M	10.0–11.2
D	4.0 –4.5	N	11.2–12.5
E	4.5 –5.0	P	12.5–14.0
F	5.0 –5.6	R	14.0–16.0
G	5.6 –6.3	S	16.0–18.0
H	6.3 –7.1	T	18.0–20.0
J	7.1 –8.0	U	20.0–22.4
		V	22.4–and up

*Locked kVA per horsepower range includes the lower figure up to, but not including, the higher figure. For example, 3.14 is designated by letter A and 3.15 by letter B.

C. Multispeed motors shall be marked with the code letter designating the locked-rotor kVA per horsepower for the highest speed at which the motor can be started, except constant-horsepower motors which shall be marked with the code letter for the speed giving the highest locked-rotor kVA per horsepower.

D. Single-speed motors starting on Y connection and running on delta connection shall be marked with a code letter corresponding to the locked-rotor kVA per horsepower for the Y connection.

E. Dual-voltage motors which have a different locked-rotor kVA per horsepower on the two voltages shall be marked with the code letter for the voltage giving the highest locked-rotor kVA per horsepower.

F. Motors with 60- and 50-hertz ratings shall be marked with a code letter designating the locked-rotor kVA per horsepower on 60 hertz.

G. Part-winding-start motors shall be marked with a code letter designating the locked-rotor kVA per horsepower that is based upon the locked-rotor current for the full winding of the motor.

NEMA Standard 8-7-1947, revised 6-22-1950; 11-13-1958; 5-21-1962.

MG 1-10.36a Nameplate Temperature Ratings for Alternating-current Fractional Horsepower and Universal Motors

Alternating-current motors shall be rated on the basis of a maximum ambient temperature and the insulation system class.

The rated value of the maximum ambient temperature shall be 40 °C unless otherwise specified, and the insulation system shall be Class A, B, F, or H. All such ratings are based upon a rated load test with temperature rise values (measured by either method when two methods are listed) not exceeding those shown for the designated class of insulation system in the appropriate temperature rise table in MG 1-12.41. Ratings of alternating-current motors for any other value of maximum ambient temperature shall be based on temperature rise values as calculated in accordance with MG 1-12.41.

NEMA Standard 9-3-1980.

Copyright National Electrical Manufacturers Association
Provided by IHS under license with NEMA
No reproduction or networking permitted without license from IHS
Not for Resale

9009279 0003364 343

MG 1-10.37 Nameplate Marking for Alternating-current Fractional-horsepower and Universal Motors

The following minimum amount of information shall be given on all nameplates. For abbreviations, see MG 1-1.80.

A. ALTERNATING-CURRENT SINGLE-PHASE AND POLYPHASE SQUIRREL-CAGE MOTORS, EXCEPT THOSE INCLUDED IN PAR. B, C AND D

1. Manufacturer's type and frame designation.
2. Horsepower output.
3. Time rating.
4. Maximum ambient temperature for which motor is designed (see Note I of par. A of MG 1-12.41).
5. Insulation system designation. (If stator and rotor use different classes of insulation systems, both insulation system designations should be given on the nameplate, that for stator being given first.)
6. Rpm at full load.†
7. Frequency.
8. Number of phases.
9. Voltage.
10. Full-load amperes.
11. Code.‡
12. For motors equipped with thermal protection, the words "thermally protected" and, for motors rated more than 1 horsepower, a type number.**(See MG 1-1.71 and MG 1-1.72.) (For their own convenience, motor manufacturers may use letters, but not numbers, preceding or following the words "thermally protected" for other identification purposes.)

† This speed is the approximate rpm at rated load (see par. A and B of MG 1-10.32).
‡ See MG 1-10.36.
** These may be shown on a separate plate or decalcomania if desired.

B. MOTORS RATED LESS THAN 1/20 HORSEPOWER

1. Type designation.
2. Power output.
3. Full-load speed.†
4. Voltage rating.
5. Frequency.
6. Number of phases-polyphase only (this may be designated by a number showing the number of phases following the frequency).
7. The words "thermally protected" for motors equipped with a thermal protector.* (See MG 1-1.71 and MG 1-1.72.) (For their own convenience, motor manufacturers may use letters, but not numbers, preceding or following the words "thermally protected" for other identification purposes.) Thermally protected motors rated 100 watts or less and complying with 430-32(c) (2) of the *National Electrical Code* shall be permitted to use the abbreviated marking, "T.P."

The words "impedance protected" for motors with sufficient impedance within the motors so that they are protected from the dangerous overheating due to overload or failure to start.* Impedance protected motors rated 100 watts or less and complying with 430-32(c)(4) of the *National Electrical Code* shall be permitted to use the abbreviated marking, "Z.P."

* These words may be shown on a separate plate or decalcomania.
† This speed is the approximate rpm at rated load (see par. A and B of MG 1-10.32).

C. UNIVERSAL MOTORS

1. Manufacturer's type and frame designation.
2. Horsepower output.
3. Time rating.
4. Rpm at full load.
5. Voltage
6. Full-load amperes (on 60 hertz).
7. Frequency (60/dc is recommended form).

D. MOTORS INTENDED FOR ASSEMBLY IN A DEVICE HAVING ITS OWN MARKINGS

1. Voltage rating.
2. Frequency.
3. Number of phases—polyphase only (this may be designated by a number showing the number of phases following the frequency).

NOTE—For par. A, B, C and D, when air flow is required over the motor from the driven equipment in order to have the motor conform to temperature rise standards, "air over" shall appear on the nameplate. When the heat dissipating characteristics of the driven equipment, other than air flow, are required in order to have the motor conform to temperature rise standards, "auxiliary cooling" shall appear on the nameplate.

Recommended Standard 1-26-1948, revised 6-22-1950; 1-23-1951; NEMA Standard 5-17-1953, revised 11-12-1953; 11-11-1954; 11-12-1959; 5-24-1960; 11-9-1961; 8-19-1964; 11-11-1965; 9-21-1966; 11-21-1968; 7-14-1971; 7-13-1977.

MG 1-10.38 Nameplate Marking for Integral-horsepower Single-phase and Polyphase Induction Motors

The following minimum amount of information shall be given on all nameplates of single-phase and polyphase induction motors. For abbreviations, see MG 1-1.80.

Copyright National Electrical Manufacturers Association
Provided by IHS under license with NEMA
No reproduction or networking permitted without license from IHS
Not for Resale

9009279 0003365 28T

A. ALTERNATING-CURRENT SINGLE-PHASE AND POLYPHASE SQUIRREL-CAGE MOTORS ▲

1. Manufacturer's type and frame designation.
2. Horsepower output.
3. Time rating (see MG 1-10.35).
4. Maximum ambient temperature for which motor is designed (see Note 1 of MG 1-12.42).‡
5. Insulation system designation. (If stator and rotor use different classes of insulation systems, both insulation system designations shall be given on the nameplate, that for the stator being given first.)‡
6. Rpm at rated load.
7. Frequency.*
8. Number of phases.
9. Rated-load amperes.
10. Voltage.
11. Code letter for locked-rotor kVA (see MG 1-10.36).
12. Design letter for integral-horsepower motors (see MG 1-1.16).
13. NEMA nominal efficiency when required by MG 1-12.53.b.
14. Service factor if other than 1.0.
15. For motors equipped with thermal protectors, the words "thermally protected" if the motor provides all the protection described in MG 1-12.52 (see MG 1-1.71 and MG 1-1.72).†
16. For motors rated above 1 horsepower equipped with over-temperature devices or systems, the words "OVER TEMP. PROT. ____" followed by a type number as described in MG 1-12.53.†

* If two frequencies are stamped on the nameplate, the data covered by items 2, 3, 4, 6, 9, 10 and 13, if different, shall be given for both frequencies.

† These shall be permitted to be shown on a separate plate or decalcomania.

‡ As an alternative to these two items, the temperature rise by resistance as shown in MG 1-12.42 shall be permitted to be given.

NOTE—When air flow is required over the motor from the driven equipment in order to have the motor conform to temperature rise standards, "air over" shall appear on the nameplate. When the heat dissipating characteristics of the driven equipment, other than air flow, are required in order to have the motor conform to temperature rise standards, "auxiliary cooling" shall appear on the nameplate.

B. POLYPHASE WOUND-ROTOR MOTORS

1 to 10, inclusive—same as par. A, items 1 to 10, inclusive.
11. Secondary amperes at full load.
12. Secondary voltage.

Suggested Standard for Future Design 5-24-1960, revised 11-17-1960; 7-12-1961; 11-12-1964; 7-7-1965; 11-11-1965; 9-21-1966, NEMA Standard 7-14-1971, revised 3-16-1977; 9-3-1980.

▲ Revised.

Copyright National Electrical Manufacturers Association
Provided by IHS under license with NEMA
No reproduction or networking permitted without license from IHS
Not for Resale

9009279 0003366 116

SECTION II

FRACTIONAL- AND INTEGRAL-HORSEPOWER MACHINES

Part 10. Ratings—DC Motors

The standards in this Part 10 of Section II cover direct-current motors built in frames with continuous dripproof ratings, or equivalent capacities, up to and including 1.25 horsepower per rpm, open type.

Copyright National Electrical Manufacturers Association
Provided by IHS under license with NEMA
No reproduction or networking permitted without license from IHS
Not for Resale

9009279 0003367 052

Part 10
RATINGS

DC FRACTIONAL- AND INTEGRAL-HORSEPOWER MOTORS

MG 1-10.60 Basis of Rating

A. FRACTIONAL-HORSEPOWER MOTORS

The basis of rating for a direct-current fractional-horsepower motor shall be a rated form factor.

NEMA Standard 1-25-1972, revised 9-20-1972.

If the direct current is low ripple, the form factor is 1.0. As the ripple increases, the form factor increases. A fractional-horsepower motor is not intended to be used on a power supply that produces a form factor at the rated load in conjunction with the motor greater than the rated form factor of the motor.

Authorized Engineering Information 1-25-1972, revised 9-20-1972.

B. INTEGRAL-HORSEPOWER MOTORS

While direct-current integral-horsepower motors may be used on various types of power supplies, the basis for demonstrating conformance of the motor with these standards shall be a test using a power supply described in par. B of MG 1-12.61. The power supply identification shall be indicated on the nameplate as an essential part of the motor rating in accordance with MG 1-10.65.

NEMA Standard 1-25-1972, revised 9-20-1972.

It may not be practical to conduct tests on motors intended for use on power supplies other than those specified in par. B of MG 1-12.61. In such cases, the performance characteristics of a motor may be demonstrated by a test using the particular power supply or by a combination of tests on an available power supply and the calculation of the predicted performance of the motor from the test data.

Authorized Engineering Information 1-25-1972, revised 9-20-1972.

MG 1-10.61 Power Supply Identification for Direct-Current Integral-horsepower Motors

A. When the test power supply used as the basis of rating for a direct-current integral-horsepower motor is one of those described in par. B of MG 1-12.61, a single letter shall be used to identify the test power supply.

B. When a direct-current integral-horsepower motor is intended to be used on a power supply other than those described in par. B of MG 1-12.61, it shall be identified as follows:

M/N F–V–H–L

where

M = a digit indicating total pulses per cycle.
N = a digit indicating controlled pulses per cycle.
F = free wheeling (this letter appears only if free wheeling is used).
V = three digits indicating nominal line-to-line alternating-current voltage to the rectifier.
H = two digits indicating input frequency in hertz.
L = one, two or three digits indicating the series inductance in millihenries (may be zero) to be added externally to the motor armature circuit.

If the input frequency is 60 hertz and no series inductance is added externally to the motor armature circuit, these quantities need not be indicated and may be omitted from the identification of the power supply. However, if one of these quantities is indicated, then both of them shall appear to avoid confusion.

EXAMPLE—"6/3 F–380–50–12" defines a power supply having six total pulses per cycle, three controlled pulses per cycle, with free wheeling, with 380 volts alternating-current input at 50 hertz input, and 12 millihenries of externally added series inductance to the motor armature circuit inductance.

NEMA Standard 1-25-1972.

MG 1-10.62 Horsepower, Speed and Voltage Ratings

A. DIRECT-CURRENT FRACTIONAL-HORSEPOWER MOTORS

1. Operation from Low Ripple (1.0 Form Factor) Power Supplies—The horsepower and speed ratings for direct-current, fractional-horsepower, constant-speed motors rated 115 and 230 volts shall be:

Hp	Approximate Full Load, Rpm			
1/20	3450	2500	1725	1140
1/12	3450	2500	1725	1140
1/8	3450	2500	1725	1140
1/6	3450	2500	1725	1140
1/4	3450	2500	1725	1140
1/3	3450	2500	1725	1140
1/2	3450	2500	1725	1140
3/4	3450	2500	1725	...
1	3450	2500	...	...

Copyright National Electrical Manufacturers Association
Provided by IHS under license with NEMA
No reproduction or networking permitted without license from IHS
Not for Resale

9009279 0003368 T99

A. DIRECT-CURRENT FRACTIONAL-HORSEPOWER MOTORS (*Continued*)

2. Operation from Rectifier Power Supplies—The horsepower, speed, voltage and form factor ratings of direct-current fractional-horsepower motors intended for use on adjustable-voltage rectifier power supplies shall be:

Hp	Approximate Rated-load Speed, Rpm*				Rated Voltages, Average Direct-current Values: Armature Voltages	Rated Voltages, Average Direct-current Values: Field Voltages	Rated Form Factor
SINGLE-PHASE PRIMARY POWER SOURCE							
1/20	3450	2500	1725	1140	75 volts	50 or 100 volts	See Notes I and II
1/15	3450	2500	1725	1140			
1/12	3450	2500	1725	1140			
1/8	3450	2500	1725	1140	90 volts	50 or 100 volts	
1/6	3450	2500	1725	1140	150 volts	100 volts	
1/4	3450	2500	1725	1140			
1/3	3450	2500	1725	1140			
1/2	3450	2500	1725	1140			
3/4	3450	2500	1725	...	90 volts	50 or 100 volts	
1	3450	2500	...	...	180 volts	100 or 200 volts	
THREE-PHASE PRIMARY POWER SOURCE							
1/4	3450	2500	1725	1140	240 volts	100, 150 or 240 volts	See Notes I and II
1/3	3450	2500	1725	1140			
1/2	3450	2500	1725	1140			
3/4	3450	2500	1725	...			
1	3450	2500	...	...			

NOTE I—The rated form factor of a direct-current motor is the armature current form factor at rated load and rated speed and is an essential part of the motor rating.

NOTE II—A direct-current motor is suitable for operation at the rated or lower form factor at rated load and rated speed. The rated form factor of a direct-current motor is determined by the motor manufacturer; see MG 1-10.65. Recommended rated form factors are given in Table 14-1 of MG 1-14.60.†

* Motors rated 1/20 to 1 horsepower, inclusive, are not suitable for speed control by field weakening.†

† Approved as Authorized Engineering Information.

B. INDUSTRIAL DIRECT-CURRENT MOTORS ▲

The horsepower, voltage and base speeds for industrial direct-current motors shall be in accordance with Tables 10-3, 10-4 and 10-5. The speed which may be obtained by field control of straight shunt-wound or stabilized shunt-wound industrial direct-current motors shall be as shown in the tables.

Recommended Standard 6-24-1949, revised 11-17-1949; 6-22-1950, NEMA Standard 6-28-1951, revised 11-13-1952; 11-11-1954; 11-12-1959; 11-15-1962; 11-12-1964; 7-13-1967; 11-13-1969; 11-12-1970; 1-25-1972; 9-20-1972; 11-8-1973; 5-15-1978; 9-20-1978.

TABLE 10-3
HORSEPOWER, SPEED AND VOLTAGE RATINGS FOR INDUSTRIAL DIRECT-CURRENT MOTORS

180 VOLTS ARMATURE VOLTAGE RATING,* POWER SUPPLY K

Hp	Base Speed, Rpm: 3500	2500	1750	1150	850	Field Voltage, Volts
	Speed by Field Control, Rpm					
1/2*	...	...	...	...	940	50, 100 or 200
3/4*	...	...	...	1380	940	
1*	...	...	2050	1380	940	
1 1/2	3850	2750	2050	1380	940	100 or 200
2	3850	2750	2050	1380	940	
3	3850	2750	2050	1380	940	
5	3850	2750	2050	1380	940	

* For these ratings, the armature voltage rating shall be 90 or 180 volts.

▲ Revised.

Copyright National Electrical Manufacturers Association
Provided by IHS under license with NEMA
No reproduction or networking permitted without license from IHS
Not for Resale

9009279 0003369 925

TABLE 10-4
HORSEPOWER, SPEED AND VOLTAGE RATINGS FOR INDUSTRIAL DIRECT-CURRENT MOTORS

240 VOLTS ARMATURE VOLTAGE RATING, POWER SUPPLY A, C, D OR E

Hp	Base Speed, Rpm: 3500	2500	1750	1150	850	650	500	400	300	Field Voltage, Volts
	Speed by Field Control, Rpm									
½	...	...	...	...	1700	...	...	...	...	100, 150 or 240
¾	...	...	...	2000	1700	...	...	...	...	
1	...	...	2300	2000	1700	...	...	...	...	
1½	3850	3000	2300	2000	1700	...	...	...	...	
2	3850	3000	2300	2000	1700	...	...	...	...	
3	3850	3000	2300	2000	1700	...	...	...	...	
5	3850	3000	2300	2000	1700	...	...	...	...	
7½	...	3000	2300	2000	1700	...	...	...	...	150 or 240
10	...	3000	2300	2000	1700	...	...	...	...	
15	...	3000	2300	2000	1700	1600	1500	1200	1200	
20	...	3000	2300	2000	1700	1600	1500	1200	1200	
25	...	3000	2300	2000	1700	1600	1500	1200	1200	
30	...	3000	2300	2000	1700	1600	1500	1200	1200	
40	...	3000	2100	2000	1700	1600	1500	1200	1200	
50	...	...	2100	2000	1700	1600	1500	1200	1200	
60	...	...	2100	2000	1700	1600	1500	1200	1200	
75	...	...	2100	2000	1700	1600	1500	1200	1200	
100	...	...	2000	2000	1700	1600	1500	1200	1200	
125	...	...	2000	2000	1700	1600	1500	1200	1200	
150	...	...	2000	2000	1700	1600	1500	1200	1100	
200	...	...	1900	1800	1700	1600	1500	1200	1100	
250	...	...	1900	1700	1600	...	...	...	...	

TABLE 10-5
HORSEPOWER, SPEED AND VOLTAGE RATINGS FOR INDUSTRIAL DIRECT-CURRENT MOTORS

500 OR 550* VOLTS ARMATURE VOLTAGE RATING, POWER SUPPLY A, C OR D

Hp	Base Speed, Rpm: 2500	1750	1150	850	650	500	400	300	Field Voltage, Volts
	Speed by Field Control, Rpm								
7½	3000	2300	2000	1700	...	...	...	...	240 or 300
10	3000	2300	2000	1700	...	...	...	...	
15	3000	2300	2000	1700	...	...	...	...	
20	3000	2300	2000	1700	...	...	...	...	
25	3000	2300	2000	1700	...	...	...	...	
30	3000	2300	2000	1700	...	...	...	...	
40	3000	2100	2000	1700	...	...	...	...	
50	...	2100	2000	1700	1600	1500	1200	1200	
60	...	2100	2000	1700	1600	1500	1200	1200	
75	...	2100	2000	1700	1600	1500	1200	1200	
100	...	2000	2000	1700	1600	1500	1200	1200	
125	...	2000	2000	1700	1600	1500	1200	1200	
150	...	2000	2000	1700	1600	1500	1200	1100	
200	...	1900	1800	1700	1600	1500	1200	1100	
250	...	1900	1700	1600	1600	1400	1200	1100	
300	...	1900	1600	1500	1500	1300	1200	1000	
400	...	1900	1500	1500	1400	1300	1200	...	
500	...	1900	1500	1400	1400	1250	1100	...	
600	...	...	1500	1300	1300	1200	...	...	
700	...	...	1300	1300	1250	...	...	...	
800	...	...	1250	1250	1200	...	...	...	
900	...	...	1250	1200	...	...	...	...	
1000	...	...	1250	1200	...	...	...	...	

*550 volts is an alternate armature voltage rating.

Copyright National Electrical Manufacturers Association
Provided by IHS under license with NEMA
No reproduction or networking permitted without license from IHS
Not for Resale

: ■ 9009279 0003370 647 ■

MG 1-10.63 Nameplate Time Rating

Direct-current motors shall have a continuous rating unless otherwise specified. When a short-time rating is used, it shall be for 5, 15, 30 or 60 minutes. All short-time ratings are based upon a corresponding short-time load test which shall commence only when the windings and other parts of the machine are within 5°C of the ambient temperature at the time of starting the test.

NEMA Standard 6-24-1949, revised 11-15-1951; 11-13-1952; 11-12-1959; 1-21-1964; 8-19-1964; 7-7-1965; 8-20-1966; 1-25-1972.

MG 1-10.63.a Time Rating for Intermittent, Periodic and Varying Duty

For application on intermittent, periodic or varying duty, the time rating shall be continuous or short time, based on the thermal effects being as close as possible to those which will be encountered in actual service.

NEMA Standard 1-25-1973.

MG 1-10.64 Nameplate Maximum Ambient Temperature and Insulation System Class ▲

Direct-current motors shall be rated on the basis of a maximum ambient temperature and the insulation system class.

The rated value of the maximum ambient temperature shall be 40°C unless otherwise specified, and the insulation system shall be Class A, B, F or H. All such ratings are based upon a load test with temperature rise values (measured by either method when two methods are listed) not exceeding those shown for the designated class of insulation system in the appropriate temperature rise table in MG 1-12.62. Ratings of direct-current motors for any other value of maximum ambient temperature shall be based on temperature rise values as calculated in accordance with MG 1-12.62.

NEMA Standard 6-24-1949, revised 11-15-1951; 11-13-1952; 11-12-1959; 1-21-1964; 8-19-1964; 7-7-1965; 8-20-1966; 1-25-1972; 1-29-1981.

▲ Revised.

Copyright National Electrical Manufacturers Association
Provided by IHS under license with NEMA
No reproduction or networking permitted without license from IHS
Not for Resale

9009279 0003371 583

MG 1-10.65 Nameplate Marking

The following minimum amount of information shall be given on all nameplates. For abbreviations, see MG 1-1.80.

A. FRACTIONAL-HORSEPOWER MOTORS RATED 1/20 HORSEPOWER AND LESS

1. Manufacturer's type designation.
2. Power output (millihorsepower—mhp).
3. Full-load speed (see par. A of MG 1-10.62).
4. Voltage rating.
5. The words "thermally protected" for motors equipped with a thermal protector.* (See MG 1-1.71 and MG 1-1.72.) (For their own convenience, motor manufacturers may use letters, but not numbers, preceding or following the words "thermally protected" for other identification purposes.)
6. The words "impedance protected" for motors with sufficient impedance within the motors so that they are protected from dangerous overheating due to overload or failure to start.*

B. FRACTIONAL-HORSEPOWER MOTORS EXCEPT THOSE RATED 1/20 HORSEPOWER AND LESS

1. Manufacturer's type designation.
2. Horsepower output at rated speed.
3. Time rating at rated speed.
4. Maximum ambient temperature for which motor is designed.†
5. Insulation system designation. (If field and armature use different classes of insulation systems, both insulation system designations shall be given on the nameplate, that for the field being given first.)†
6. Speed in rpm.
7. Rated armature voltage.‡
8. ▲ Rated field voltage (PM for permanent magnet motors). ‡#
9. Armature rated-load amperes at rated speed.‡
10. Rated form factor when operated from rectifier power supply (see MG 1-10.62, par. A.2, Notes I and II).
11. The words "thermally protected" for motors equipped with a thermal protector.* (See MG 1-1.71 and MG 1-1.72.)

C. INTEGRAL-HORSEPOWER MOTORS

1. Manufacturer's type and frame designation.
2. Horsepower output at base speed.
3. Time rating at base speed.
4. Maximum safe rpm for all series-wound motors and for those compound-wound motors whose variation in speed from rated load to no-load exceeds 35 percent with the windings at the constant temperature attained when operating at its rating.
5. Maximum ambient temperature for which the motor is designed.†
6. Insulation system designation. (If field and armature use different classes of insulation systems, both insulation systems shall be given, that for the field being given first.)†
7. Base speed at rated load.**
8. Rated armature voltage.‡
9. ▲ Rated field voltage (not applicable for permanent magnet motors). ††‡
10. Armature rated-load current in amperes at base speed.‡
11. Power supply identification in accordance with MG 1-10.61.
12. ▲ Winding—straight shunt, stabilized shunt, compound, series, or permanent magnet.

* These words may be shown on a separate plate or decalcomania.
† As an alternative, these items may be replaced by a single item reading "Rated temperature rise."
‡ These are average direct-current quantities.
# As an alternative, this item may be replaced by the following:
1. Field resistance in ohms at 25°C.
2. Rated field current in amperes at rated speed.

** A single speed shown on the nameplate is the base speed. Two speeds shown on the nameplate indicate the range of speed obtained by field control unless a dual armature voltage marking is shown.
††As an alternative, this item may be replaced by the following:
1. Field resistance in ohms at 25°C.
2. Rated field current in amperes. A single value of field current corresponds to the base speed. Two values correspond to the base speed and the highest speed obtained by field control.

D. MOTORS INTENDED FOR ASSEMBLY IN A DEVICE HAVING ITS OWN RATING

1. Voltage rating.
2. The words "direct current."

Recommended Standard 1-26-1948, revised 6-22-1950; 1-23-1951, NEMA Standard 5-17-1953, revised 11-12-1953; 11-11-1954; 11-12-1959; 5-24-1960; 11-9-1961; 8-19-1964; 11-11-1965; 9-21-1966; 11-16-1967; 11-21-1968; 11-12-1970; 7-14-1971; 1-25-1972; 1-25-1973; 11-8-1973: 1-17-1974; 3-19-1980.

▲ Revised.

Copyright National Electrical Manufacturers Association
Provided by IHS under license with NEMA
No reproduction or networking permitted without license from IHS
Not for Resale

9009279 0003372 41T

SECTION II

FRACTIONAL- AND INTEGRAL-HORSEPOWER MACHINES

Part 11. Dimensions—

AC and DC Motors and Generators

The standards in this Part 11 of Section II cover the following machines:

A. Alternating-current Motors and Generators

Alternating-current motors and generators up to and including the ratings built in frames corresponding to the continuous open-type ratings given in the table below:

Synchronous Speed	Motors, Squirrel-cage and Wound Rotor, Hp	Motors, Synchronous, Hp		Generators, Synchronous, Revolving Field Type, kW at 0.8 Power Factor
		Power Factor		
		Unity	0.8	
3600	500	200	150	...
1800	500	200	150	150
1200	350	200	150	150
900	250	150	125	100
720	200	125	100	100
600	150	100	75	75
514	125	75	60	60

B. Direct-current Motors and Generators

Direct-current motors and generators built in frames with continuous drip-proof ratings, or equivalent capacities, up to and including:

motors: 1.25 horsepower per rpm, open type.
generators: 1.0 kilowatt per rpm, open type.

Copyright National Electrical Manufacturers Association
Provided by IHS under license with NEMA
No reproduction or networking permitted without license from IHS Not for Resale

9009279 0003373 356

Part 11

DIMENSIONS

AC AND DC FRACTIONAL- AND INTEGRAL-HORSEPOWER MOTORS AND GENERATORS

MG 1-11.01 System for Designating Frames

The system for designating frames of motors and generators shall consist of a series of numbers in combination with letters, defined as follows:

A. FRACTIONAL-HORSEPOWER MACHINES

The frame number for fractional-horsepower machines shall be the D dimension in inches multiplied by 16.

The letters C, G, H, J, K, M, N, Y and Z shall immediately follow the frame number to denote variations as follows:

C—Face mounting (see MG 1-11.35 and MG 1-11.63).
G—Gasoline pump motors (see MG 1-18.266).
H—Indicates a frame having an F dimension larger than that of the same frame without the suffix letter H (see MG 1-11.31 and MG 1-11.61).
J—Jet pump motors (see MG 1-18.341).
K—Sump pump motors (see MG 1-18.240).
M—Oil burner motors (see MG 1-18.290).
N—Oil burner motors (see MG 1-18.290).
Y—Special mounting dimensions (dimensional diagram must be obtained from the manufacturer).
Z—All mounting dimensions are standard except the shaft extension.

NOTE—The letters B, S, T, U, V, W and X are reserved for possible future use. For their own convenience, manufacturers may use any letter in the alphabet preceding the frame number, but such a letter will have no reference to standard mounting dimensions. (This note is approved as Authorized Engineering Information.)

B. INTEGRAL-HORSEPOWER MOTORS ▲

The system for numbering the frames of integral-horsepower machines shall be as follows:

1. The first two digits of the frame number are equal to four times the D dimension in inches. When this product is not a whole number, the first two digits of the frame number shall be the next higher whole number. See Table 11-1.
2. The third, and when required, the fourth digit of the frame number is obtained from the value of 2F in inches by referring to the columns headed 1 to 15, inclusive, in Table 11-1.

The letters A, C, CH, D, E, HP, HPH, JM, JP, LP, LPH, P, PH, R, S, T, U, V, VP, X, Y or Z shall immediately follow the frame number to denote variations as follows:

A—Industrial direct-current motor or generator.
C—Face mounting on drive end.*
CH—Face mounting dimensions are different from those for the frame designation having the suffix letter C. (The letters CH are to be considered as one suffix and should not be separated.)
D—Flange mounting on drive end.†
E—Shaft extension dimensions for elevator motors in frames larger than the 326U frame.
HP and HPH—Vertical solid-shaft motors having dimensions in accordance with MG 1-18.625. (The letters HP and HPH are to be considered as one suffix and should not be separated.)
JM—Face-mounted close-coupled pump motor having antifriction bearings and dimensions in accordance with Table 1 of MG 1-18.614. (The letters JM are to be considered as one suffix and should not be separated.)
JP—Face-mounted close-coupled pump motor having antifriction bearings and dimensions in accordance with Table 2 of MG 1-18.614. (The letters JP are to be considered as one suffix and should not be separated.)
LP and LPH—Vertical solid-shaft motors having dimensions in accordance with MG 1-18.620. (The letters LP and LPH are to be considered as one suffix and should not be separated.)
P and PH—Vertical hollow-shaft motors having dimensions in accordance with MG 1-18.591.
R—Drive end tapered shaft extension having dimensions in accordance with MG 1-11.32.
S—Standard short shaft for direct connection (see dimension tables).
T—Included as part of a frame designation for which standard dimensions have been established (see dimension tables).
U—Previously used as part of a frame designation for which standard dimensions had been established (no longer included in this publication).

* When the face mounting is at the end opposite the drive, the prefix F shall be used, making the suffix letters FC.
† When the flange mounting is at the end opposite the drive, the prefix F shall be used, making the suffix letters FD.

NOTE—The letter W is reserved for possible future use. For their own convenience, manufacturers may use any letter in the alphabet preceding the frame number, but such a letter will have no reference to standard mounting dimensions. (This note is approved as Authorized Engineering Information.)

▲ Revised.

Copyright National Electrical Manufacturers Association
Provided by IHS under license with NEMA
No reproduction or networking permitted without license from IHS
Not for Resale

9009279 0003374 292

V—Vertical mounting only.

VP—Vertical solid-shaft motors having dimensions in accordance with MG 1-18.590. (The letters VP are to be considered as one suffix and should not be separated.)

X—Wound-rotor crane motors with double shaft extension (see MG 1-18.506 and MG 1-18.520).

Y—Special mounting dimensions (dimensional diagram must be obtained from the manufacturer).

Z—All mounting dimensions are standard except the shaft extension(s). Also used to designate machine with double shaft extension.

Suffix letters shall be added to the frame number in the following sequence:

Suffix Letters	Sequence
A	1
T, U, HP, HPH, JM, JP, LP, LPH and VP	2
R and S	3
C, D, P and PH	4
FC and FD	5
V	6
E, X, Y and Z	7

NEMA Standard 6-24-1949, revised 11-17-1949; 8-7-1952; 11-15-1956; 6-24-1957; 11-14-1957; 11-13-1958; 11-12-1964; 11-17-1966; 11-16-1967; 7-17-1968; 11-21-1968; 7-15-1970; 7-14-1971; 5-17-1972; 1-17-1974; 1-28-1976; 11-12-1981; 3-8-1983. ▲

TABLE 11-1

Frame Number Series	D	Third/Fourth Digit in Frame Number						
		1	2	3	4	5	6	7
		2F Dimensions						
140	3.50	3.00	3.50	4.00	4.50	5.00	5.50	6.25
160	4.00	3.50	4.00	4.50	5.00	5.50	6.25	7.00
180	4.50	4.00	4.50	5.00	5.50	6.25	7.00	8.00
200	5.00	4.50	5.00	5.50	6.50	7.00	8.00	9.00
210	5.25	4.50	5.00	5.50	6.25	7.00	8.00	9.00
220	5.50	5.00	5.50	6.25	6.75	7.50	9.00	10.00
250	6.25	5.50	6.25	7.00	8.25	9.00	10.00	11.00
280	7.00	6.25	7.00	8.00	9.50	10.00	11.00	12.50
320	8.00	7.00	8.00	9.00	10.50	11.00	12.00	14.00
360	9.00	8.00	9.00	10.00	11.25	12.25	14.00	16.00
400	10.00	9.00	10.00	11.00	12.25	13.75	16.00	18.00
440	11.00	10.00	11.00	12.50	14.50	16.50	18.00	20.00
500	12.50	11.00	12.50	14.00	16.00	18.00	20.00	22.00
580	14.50	12.50	14.00	16.00	18.00	20.00	22.00	25.00
680	17.00	16.00	18.00	20.00	22.00	25.00	28.00	32.00

Frame Number Series	D	Third/Fourth Digit in Frame Number							
		8	9	10	11	12	13	14	15
		2F Dimensions							
140	3.50	7.00	8.00	9.00	10.00	11.00	12.50	14.00	16.00
160	4.00	8.00	9.00	10.00	11.00	12.50	14.00	16.00	18.00
180	4.50	9.00	10.00	11.00	12.50	14.00	16.00	18.00	20.00
200	5.00	10.00	11.00	...	...	...	...	...	...
210	5.25	10.00	11.00	12.50	14.00	16.00	18.00	20.00	22.00
220	5.50	11.00	12.50	...	...	...	...	...	...
250	6.25	12.50	14.00	16.00	18.00	20.00	22.00	25.00	28.00
280	7.00	14.00	16.00	18.00	20.00	22.00	25.00	28.00	32.00
320	8.00	16.00	18.00	20.00	22.00	25.00	28.00	32.00	36.00
360	9.00	18.00	20.00	22.00	25.00	28.00	32.00	36.00	40.00
400	10.00	20.00	22.00	25.00	28.00	32.00	36.00	40.00	45.00
440	11.00	22.00	25.00	28.00	32.00	36.00	40.00	45.00	50.00
500	12.50	25.00	28.00	32.00	36.00	40.00	45.00	50.00	56.00
580	14.50	28.00	32.00	36.00	40.00	45.00	50.00	56.00	63.00
680	17.00	36.00	40.00	45.00	50.00	56.00	63.00	71.00	80.00

All dimensions in inches.

▲ Revised.

Copyright National Electrical Manufacturers Association
Provided by IHS under license with NEMA
No reproduction or networking permitted without license from IHS
Not for Resale

9009279 0003375 129

MG 1-11.02 Lettering of Dimension Sheets

See MG 1-4.01.

MG 1-11.03 Motor Mounting and Terminal Housing Location

See MG 1-4.02.

MG 1-11.04 Symbols for Motor and Generator Mounting Assemblies

See MG 1-4.03.

MG 1-11.05 Terminal Connections for Fractional-horsepower Motors

A. Terminal Leads

The terminal leads of fractional-horsepower motors shall be brought (1) out of the end shield at the end opposite the drive end and at the right-hand side when viewing this end or (2) out of the frame at the right-hand side when viewing the end opposite the drive and as close to this end as is practicable.

B. Blade Terminals

Except where other dimensions for blade terminals are specified in Part 18, blade terminals when used for external connections in fractional-horsepower motors shall have the following dimensions:

Frame Size	Width, Inches	Thickness, Inches
48 and larger	0.250	0.031
Smaller than 48	0.187	0.020

Recommended Standard 5-20-1938, revised 6-24-1949; 6-28-1951, NEMA Standard 5-17-1953, Suggested Standard for Future Design 6-24-1957, revised 11-12-1959, NEMA Standard 11-15-1962.

MG 1-11.06 Motor Terminal Housing Dimensions ●

A. Terminal housings shall be of metal and of substantial construction. For motors over 7 inches in diameter, the terminal housings shall be capable of withstanding without failure a vertical loading on the horizontal surfaces of 20 pounds per square inch of horizontal surface up to a maximum of 240 pounds. This load shall be applied through a 2-inch-diameter flat metal surface. Bending or deforming of the housing shall not be considered a failure unless it results in spacings between the housing and any rigidly mounted live terminals less than those given in par. C.

B. When these terminal housings enclose wire-to-wire connections, they shall have minimum dimensions and usable volumes in accordance with the following. Auxiliary leads for such items as brakes, thermostats, space heaters, exciting fields, etc., may be disregarded if their current-carrying area does not exceed 25 percent of the current-carrying area of the machine power leads.

MOTORS 11 INCHES IN DIAMETER* OR LESS

Hp	Cover Opening, Minimum Dimension, Inches	Usable Volume, Minimum, Cubic Inches
1 and smaller†	1.62	7.50
1½, 2 and 3‡	1.75	12.00
5 and 7½	2.00	16.00
10 and 15	2.50	26.00

* This is a diameter measured in the plane of lamination of the circle circumscribing the stator frame, excluding lugs, fins, boxes, etc., used solely for motor cooling, mounting, assembly or connection.
† For motors rated 1 horsepower and smaller and with the terminal housing partially or wholly integral with the frame or end shield, the volume of the terminal housing shall be not less than 0.8 cubic inch per wire-to-wire connection. The minimum cover opening dimension is not specified.
‡ For motors rated 1½, 2 and 3 horsepower and with the terminal housing partially or wholly integral with the frame or end shield, the volume of the terminal housing shall be not less than 1.0 cubic inch per wire-to-wire connection. The minimum cover opening dimension is not specified.

MOTORS OVER 11 INCHES IN DIAMETER*

ALTERNATING-CURRENT MOTORS

Maximum Full-load Current for Three-phase Motors with Maximum of Twelve Leads, Amperes	Terminal Housing Minimum Dimension, Inches	Usable Volume, Minimum, Cubic Inches	Typical Maximum Horsepower, Three Phase	
			230 Volts	460 Volts
45	2.5	26	15	30
70	3.3	55	25	50
110	4.0	100	40	75
160	5.0	180	60	125
250	6.0	330	100	200
400	7.0	600	150	300
600	8.0	1100	250	500

DIRECT-CURRENT MOTORS ▲

Maximum Full-load Current for Motors with Maximum of Six Leads	Terminal Housing Minimum Dimension, Inches	Usable Volume, Minimum, Cubic Inches
68	2.5	26
105	3.3	55
165	4.0	100
240	5.0	180
375	6.0	330
600	7.0	600
900	8.0	1100

* This is a diameter measured in the plane of lamination of the circle circumscribing the stator frame, excluding lugs, fins, boxes, etc., used solely for motor cooling, mounting, assembly or connection.

▲ Revised.
● Editorially revised.

Copyright National Electrical Manufacturers Association
Provided by IHS under license with NEMA
No reproduction or networking permitted without license from IHS
Not for Resale

9009279 0003376 065

C. When these terminal housings enclose rigidly mounted motor terminals, the terminal housing shall be of sufficient size to provide minimum terminal spacings and usable volumes in accordance with the following:

TERMINAL SPACINGS

Volts	Minimum Spacing, Inches: Between Line Terminals	Minimum Spacing, Inches: Between Line Terminals and Other Uninsulated Metal Parts
250 or less	0.25	0.25
251–600, incl.	0.38	0.38

USABLE VOLUMES

Power Supply Conductor Size, AWG	Minimum Usable Volume per Power Supply Conductor, Cubic Inches
14	1.0
12 and 10	1.25
8 and 6	2.25

For larger wire sizes or when motors are installed as a part of factory-wired equipment, without additional connection being required at the motor terminal housing during equipment installation, the terminal housing shall be of ample size to make connections, but the foregoing provisions for the volumes of terminal housings need not apply.

Suggested Standard for Future Design 1-17-1974, NEMA Standard 11-14-1974, revised 11-12-1981; 7-12-1983▲

MG 1-11.06.a Grounding Means for Field Wiring●

When motors are provided with terminal housings for wire-to-wire connections or fixed terminal connections, a means for attachment of an equipment grounding conductor termination shall be provided inside, or adjacent with accessibility from, the terminal housing. Unless its intended use is obvious, it shall be suitably identified. The termination shall be suitable for the attachment and equivalent fault current ampacity of a copper grounding conductor as shown in Table 11-2. A screw, stud, or bolt intended for the termination of a grounding conductor shall be not smaller than shown in Table 11-2. For motor full load currents in excesss of 30 amperes ac or 45 amperes dc, external tooth lockwashers, serrated screw heads, or the equivalent shall not be furnished for a screw, bolt, or stud intended as a grounding conductor termination.

When a motor is provided with a grounding terminal, this terminal shall be the solderless type and shall be on a part of the machine not normally disassembled during operation or servicing.

When a terminal housing mounting screw, stud, or bolt is used to secure the grounding conductor to the main terminal housing, there shall be at least one other equivalent securing means for attachment of the terminal housing to the machine frame.

Suggested Standard for Future Design 11-3-1983.

Table 11-2
MINIMUM SIZE GROUNDING CONDUCTOR TERMINATION

Motor Full Load Current ≤ ac	Motor Full Load Current ≤ dc	Minimum Size of Grounding Conductor Termination Attachment Means, AWG	Minimum Size of Screw, Stud, or Bolt: Steel	Minimum Size of Screw, Stud, or Bolt: Bronze
12	12	14	#6	. . .
16	16	12	#8	. . .
30	40	10	#10	. . .
45	68	8	#12	#10
70	105	6	5/16″	#12
110	165	4	5/16″	5/16″
160	240	3	3/8″	5/16″
250	375	1	1/2″	3/8″
400	600	2/0	. . .	1/2″
600	900	3/0	. . .	1/2″

MG 1-11.07 Knockout and Clearance Hole Diameters for Motor and Generator Terminal Boxes

See MG 1-4.04.

MG 1-11.08 Tolerances on Shaft Extension Diameters and Keyseats

See MG 1-4.05.

MG 1-11.09 Method of Measurement of Shaft Runout and of Eccentricity and Face Runout of Mounting Surfaces

See MG 1-4.06.

MG 1-11.10 Tolerances for Type C Face-mounted and Type D Flange-mounted Motors

See MG 1-4.07.

▲ Revised.
● Added.

Copyright National Electrical Manufacturers Association
Provided by IHS under license with NEMA
No reproduction or networking permitted without license from IHS
Not for Resale

9009279 0003377 TT1

SECTION II

FRACTIONAL- AND INTEGRAL-HORSEPOWER MACHINES

Part 11. Dimensions— AC Motors and Generators

The standards in this Part 11 of Section II cover alternating-current motors and generators up to and including the ratings built in frames corresponding to the continuous open-type ratings given in the table below:

Synchronous Speed	Motors, Squirrel-cage and Wound Rotor, Hp	Motors, Synchronous, Hp		Generators, Synchronous, Revolving Field Type, kW at 0.8 Power Factor
		Power Factor		
		Unity	0.8	
3600	500	200	150	...
1800	500	200	150	150
1200	350	200	150	150
900	250	150	125	100
720	200	125	100	100
600	150	100	75	75
514	125	75	60	60

Copyright National Electrical Manufacturers Association
Provided by IHS under license with NEMA
No reproduction or networking permitted without license from IHS
Not for Resale

9009279 0003378 938

Part 11

DIMENSIONS
AC FRACTIONAL- AND INTEGRAL-HORSEPOWER MOTORS AND GENERATORS

MG 1-11.30 Shaft Extension Diameters for Universal Motors

The shaft extension diameters, in inches, shall be:

0.2500	0.3750	0.6250
0.3125	0.5000	0.7500

NOTE—For tolerances on shaft extension diameters and keyseats, see MG 1-4.05

Recommended Standard 5-27-1924, revised 6-22-1950; NEMA Standard 5-17-1953.

Copyright National Electrical Manufacturers Association
Provided by IHS under license with NEMA
No reproduction or networking permitted without license from IHS
Not for Resale

Copyright National Electrical Manufacturers Association
Provided by IHS under license with NEMA
No reproduction or networking permitted without license from IHS
Not for Resale

9009279 0003379 874

MG 1-11.31 Dimensions for Alternating-current Foot-mounted Motors and Generators with Single Straight-shaft Extension▲

Frame Designation	A Max	B Max	D*	E†	2F†	BA	H†	U	N-W	V Min	Keyseat R	Keyseat ES Min	Keyseat S	AA Min‡
42	...	...	2.62	1.75	1.69	2.06	0.28 slot	0.3750	1.12	...	0.328	...	flat	...
48	...	...	3.00	2.12	2.75	2.50	0.34 slot	0.5000	1.50	...	0.453	...	flat	...
48H	...	...	3.00	2.12	4.75	2.50	0.34 slot	0.5000	1.50	...	0.453	...	flat	...
56	...	...	3.50	2.44	3.00	2.75	0.34 slot	0.6250	1.88	...	0.517	1.41	0.188	...
56H	...	...	3.50	2.44	5.00	2.75	0.34 slot	0.6250	1.88	...	0.517	1.41	0.188	...
143T	7.0	6.0	3.50	2.75	4.00	2.25	0.34 hole	0.8750	2.25	2.00	0.771	1.41	0.188	3/4
145T	7.0	6.0	3.50	2.75	5.00	2.25	0.34 hole	0.8750	2.25	2.00	0.771	1.41	0.188	3/4
182T	9.0	6.5	4.50	3.75	4.50	2.75	0.41 hole	1.1250	2.75	2.50	0.986	1.78	0.250	3/4
184T	9.0	7.5	4.50	3.75	5.50	2.75	0.41 hole	1.1250	2.75	2.50	0.986	1.78	0.250	3/4
213T	10.5	7.5	5.25	4.25	5.50	3.50	0.41 hole	1.3750	3.38	3.12	1.201	2.41	0.312	1
215T	10.5	9.0	5.25	4.25	7.00	3.50	0.41 hole	1.3750	3.38	3.12	1.201	2.41	0.312	1
254T	12.5	10.8	6.25	5.00	8.25	4.25	0.53 hole	1.625	4.00	3.75	1.416	2.91	0.375	1 1/4
256T	12.5	12.5	6.25	5.00	10.00	4.25	0.53 hole	1.625	4.00	3.75	1.416	2.91	0.375	1 1/4
284T	14.0	12.5	7.00	5.50	9.50	4.75	0.53 hole	1.875	4.62	4.38	1.591	3.28	0.500	1 1/2
284TS	14.0	12.5	7.00	5.50	9.50	4.75	0.53 hole	1.625	3.25	3.00	1.416	1.91	0.375	1 1/2
286T	14.0	14.0	7.00	5.50	11.00	4.75	0.53 hole	1.875	4.62	4.38	1.591	3.28	0.500	1 1/2
286TS	14.0	14.0	7.00	5.50	11.00	4.75	0.53 hole	1.625	3.25	3.00	1.416	1.91	0.375	1 1/2
324T	16.0	14.0	8.00	6.25	10.50	5.25	0.66 hole	2.125	5.25	5.00	1.845	3.91	0.500	2
324TS	16.0	14.0	8.00	6.25	10.50	5.25	0.66 hole	1.875	3.75	3.50	1.591	2.03	0.500	2
326T	16.0	15.5	8.00	6.25	12.00	5.25	0.66 hole	2.125	5.25	5.00	1.845	3.91	0.500	2
326TS	16.0	15.5	8.00	6.25	12.00	5.25	0.66 hole	1.875	3.75	3.50	1.591	2.03	0.500	2
364T	18.0	15.2	9.00	7.00	11.25	5.88	0.66 hole	2.375	5.88	5.62	2.021	4.28	0.625	3
364TS	18.0	15.2	9.00	7.00	11.25	5.88	0.66 hole	1.875	3.75	3.50	1.591	2.03	0.500	3
365T	18.0	16.2	9.00	7.00	12.25	5.88	0.66 hole	2.375	5.88	5.62	2.021	4.28	0.625	3
365TS	18.0	16.2	9.00	7.00	12.25	5.88	0.66 hole	1.875	3.75	3.50	1.591	2.03	0.500	3
404T	20.0	16.2	10.00	8.00	12.25	6.62	0.81 hole	2.875	7.25	7.00	2.450	5.65	0.750	3
404TS	20.0	16.2	10.00	8.00	12.25	6.62	0.81 hole	2.125	4.25	4.00	1.845	2.78	0.500	3
405T	20.0	17.8	10.00	8.00	13.75	6.62	0.81 hole	2.875	7.25	7.00	2.450	5.65	0.750	3
405TS	20.0	17.8	10.00	8.00	13.75	6.62	0.81 hole	2.125	4.25	4.00	1.845	2.78	0.500	3
444T	22.0	18.5	11.00	9.00	14.50	7.50	0.81 hole	3.375	8.50	8.25	2.880	6.91	0.875	3
444TS	22.0	18.5	11.00	9.00	14.50	7.50	0.81 hole	2.375	4.75	4.50	2.021	3.03	0.625	3
445T	22.0	20.5	11.00	9.00	16.50	7.50	0.81 hole	3.375	8.50	8.25	2.880	6.91	0.875	3
445TS	22.0	20.5	11.00	9.00	16.50	7.50	0.81 hole	2.375	4.75	4.50	2.021	3.03	0.625	3
440	...	...	11.00	9.00	**	7.50	...	...	...	...	...	...	...	...
500	...	...	12.50	10.00	**	8.50	...	...	...	...	...	...	...	...

All dimensions in inches.

* Frames 42 to 56H, inclusive—The tolerance on the D dimension for rigid base motors shall be +0.00 inch, −0.06 inch. Frames 143T to 326TS, inclusive—The tolerance on the D dimension for rigid base motors shall be +0.00 inch, −0.03 inch. Frames 364T to 500, inclusive—The tolerance on the D dimension for rigid base motors shall be +0.00 inch, −0.06 inch. No tolerance has been established for the D dimension of resilient mounted motors.

+ Frames 42 to 56H, inclusive—The tolerance for the 2F dimension shall be ±0.03 inch and for the H dimension (width of slot) shall be +0.02 inch, −0 inch.

Frames 143T to 500, inclusive—The tolerance for the 2E and 2F dimensions shall be ±0.03 inch and for the H dimension shall be +0.05 inch, −0 inch.

‡ For dimensions of clearance holes, see MG 1-4.04.

** For the 2F dimension and corresponding third (and when required the fourth) digit in the frame series, see MG 1-11.01.B and Table 11-1.

Note I—For the meaning of the letter dimensions, see MG 1-4.01 and Figures 4-1 and 4-2.

Note II—For tolerances on shaft extension diameters and keyseats, see MG 1-4.05.

Note III—It is recommended that all machines with keyseats cut in the shaft extension for pulley, coupling, pinion, and so forth, be furnished with a key unless otherwise specified by the purchaser. (Approved as Authorized Engineering Information 3-8-1983.)

Note IV—Frames 42 to 56H, inclusive—If the shaft extension length of the motor is not suitable for the application, it is recommended that deviations from this length be in 0.25-inch increments. (Approved as Authorized Engineering Information 3-8-1983.)

Suggested Standard for Future Design 1-21-1964, revised 8-19-1964; 11-12-1964; 7-7-1965; 11-11-1965; 7-13-1967, NEMA Standard 7-16-1969, revised 11-13-1969; 11-12-1970; 7-14-1971; 3-8-1983.

▲ Revised.

Copyright National Electrical Manufacturers Association
Provided by IHS under license with NEMA
No reproduction or networking permitted without license from IHS
Not for Resale

MG 1-11.32 Shaft Extension and Key Dimensions for Alternating-current Foot-mounted Motors and Generators with Single Tapered or Double Straight/Tapered Shaft Extension▲

	Drive End—Tapered Shaft Extension										
									Keyseat		
Frame Designation	BA	U	N-W	V	X	Y	Z Max	Shaft Threads	Width	Depth	Key Length**
143TR and 145TR	2.25	0.8750	2.62	1.75	1.88	0.75	1.38	5/8-18	0.188	0.094	1.50
182TR and 184TR	2.75	1.1250	3.38	2.25	2.38	0.88	1.50	3/4-16	0.250	0.125	2.00
213TR and 215TR	3.50	1.3750	4.12	2.62	2.75	1.25	2.00	1 -14	0.312	0.156	2.38
254TR and 256TR	4.25	1.625	4.50	2.88	3.00	1.25	2.00	1 -14	0.375	0.188	2.62
284TR and 286TR	4.75	1.875	4.75	3.12	3.25	1.25	2.38	1 1/4-12	0.500	0.250	2.88
324TR and 326TR	5.25	2.125	5.25	3.50	3.62	1.38	2.75	1 1/2-8	0.500	0.250	3.25
364TR and 365TR	5.88	2.375	5.75	3.75	3.88	1.50	3.25	1 3/4-8	0.625	0.312	3.50
404TR and 405TR	6.62	2.875	6.62	4.38	4.50	1.75	3.62	2 -8	0.750	0.375	4.12
444TR and 445TR	7.50	3.375	7.50	5.00	5.12	2.00	4.12	2 1/4-8	0.875	0.438	4.75

	Opposite Drive End—Tapered Shaft Extension*									
								Keyseat		
Frame Number Series	FU	FN-FW	FV	FX	FY	FZ Max	Shaft Threads	Width	Depth	Key Length**
140	0.6250	2.00	1.38	1.50	0.50	1.12	3/8-24	0.188	0.094	1.12
180	0.8750	2.62	1.75	1.88	0.75	1.38	5/8-18	0.188	0.094	1.50
210	1.1250	3.38	2.25	2.38	0.88	1.50	3/4-16	0.250	0.125	2.00
250	1.3750	4.12	2.62	2.75	1.25	2.00	1 -14	0.312	0.156	2.38
280	1.6250	4.50	2.88	3.00	1.25	2.00	1 -14	0.375	0.188	2.62
320	1.8750	4.75	3.12	3.25	1.25	2.38	1 1/4-12	0.500	0.250	2.88
360	1.8750	4.75	3.12	3.25	1.25	2.38	1 1/4-12	0.500	0.250	2.88
400	2.1250	5.25	3.50	3.62	1.38	2.75	1 1/2-8	0.500	0.250	3.25
440	2.3750	5.75	3.75	3.88	1.50	3.25	1 3/4-8	0.625	0.312	3.50

	Opposite Drive End—Straight Shaft Extension *					
				Keyseat		
Frame Number Series	FU	FN-FW	FV Min	R	ES Min	S
140	0.6250	1.62	1.38	0.517	0.91	0.188
180	0.8750	2.25	2.00	0.771	1.41	0.188
210	1.1250	2.75	2.50	0.986	1.78	0.250
250	1.3750	3.38	3.12	1.201	2.41	0.312
280	1.625	4.00	3.75	1.416	2.91	0.375
280 Short Shaft	1.625	3.25	3.00	1.416	1.91	0.375
320	1.875	4.62	4.38	1.591	3.28	0.500
320 Short Shaft	1.875	3.75	3.50	1.591	2.03	0.500
360	1.875	4.62	4.38	1.591	3.28	0.500
360 Short Shaft	1.875	3.75	3.50	1.591	2.03	0.500
400	2.125	5.25	5.00	1.845	3.91	0.500
400 Short Shaft	2.125	4.25	4.00	1.845	2.78	0.500
440	2.375	5.88	5.62	2.021	4.28	0.625
440 Short Shaft	2.375	4.75	4.50	2.021	3.03	0.625

All dimensions in inches.

* For drive applications other than direct connect, the motor manufacturer should be consulted.

** Tolerance on the length of the key is ±0.03 inch.

NOTE I—For the meaning of the letter dimensions, see MG 1-4.01 and Figs. 4-1 and 4-2.

NOTE II—For tolerances on shaft extension diameters and keyseats, see MG 1-4.05.

NOTE III—It is recommended that all machines with keyseats cut in the shaft extension for pulley, coupling, pinion, etc., be furnished with a key unless otherwise specified by the purchaser.

NOTE IV—Tapered shafts—the standard taper of shafts shall be at the rate of 1.25 inch in diameter per foot of length. The thread at the end of the tapered shaft shall be provided with a nut and a suitable locking device.

Suggested Standard for Future Design 7-7-1965, reaffirmed 11-21-1968, NEMA Standard 7-16-1969, revised 7-14-1971; 1-28-1976; 3-14-1979.

▲ Revised.

Copyright National Electrical Manufacturers Association
Provided by IHS under license with NEMA
No reproduction or networking permitted without license from IHS
Not for Resale

9009279 0003381 422

MG 1-11.33 Dimensions for 500, 580 and 680 Frame Series for Alternating-current Foot-mounted Motors and Generators ●

MG 1-11.34 Shaft Extension Diameters and Key Dimensions for Alternating-current Motors Built in Frames Larger Than the 445T Frames

The shaft extension diameters and key dimensions for alternating-current motors having ratings built in frames larger than the 445T frame up to and including the ratings built in frames corresponding to the continuous open-type rating given in the title page of this Part shall be as shown in Table 4-1 of MG 1-4.05.

Suggested Standard for Future Design 11-9-1961, reaffirmed 8-19-1964; 7-13-1967, NEMA Standard 11-12-1970.

● Rescinded 7-12-1983.

Copyright National Electrical Manufacturers Association
Provided by IHS under license with NEMA
No reproduction or networking permitted without license from IHS
Not for Resale

MG 1-11.35 Dimensions for Type C Face-mounted Foot or Footless Alternating-current Motors●

Frame Designation	AJ**	AK	BA	BB Min	BC	BD Max	BF Hole			U	AH	Keyseat		
							Number	Tap Size	Bolt Penetration Allowance			R	ES Min	S
42C	3.750	3.000	2.062	0.16†	−0.19	5.00‡	4	¼–20	...	0.3750	1.312*	0.328	...	flat
48C	3.750	3.000	2.50	0.16†	−0.19	5.625‡	4	¼–20	...	0.500	1.69*	0.453	...	flat
56C	5.875	4.500	2.75	0.16†	−0.19	6.50‡	4	⅜–16	...	0.6250	2.06*	0.517	1.41	0.188
143TC and 145TC	5.875	4.500	2.75	0.16†	+0.12	6.50‡	4	⅜–16	0.56	0.8750	2.12	0.771	1.41	0.188
182TC and 184TC	7.250	8.500	3.50	0.25	+0.12	9.00	4	½–13	0.75	1.1250	2.62	0.986	1.78	0.250
182TCH and 184TCH	5.875	4.500	3.50	0.16†	+0.12	6.50‡	4	⅜–16	0.56	1.1250	2.62	0.986	1.78	0.250
213TC and 215TC	7.250	8.500	4.25	0.25	+0.25	9.00	4	½–13	0.75	1.3750	3.12	1.201	2.41	0.312
254TC and 256TC	7.250	8.500	4.75	0.25	+0.25	10.00	4	½–13	0.75	1.625	3.75	1.416	2.91	0.375
284TC and 286TC	9.000	10.500	4.75	0.25	+0.25	11.25	4	½–13	0.75	1.875	4.38	1.591	3.28	0.500
284TSC and 286TSC	9.000	10.500	4.75	0.25	+0.25	11.25	4	½–13	0.75	1.625	3.00	1.416	1.91	0.375
324TC and 326TC	11.000	12.500	5.25	0.25	+0.25	14.00	4	⅝–11	0.94	2.125	5.00	1.845	3.91	0.500
324TSC and 326TSC	11.000	12.500	5.25	0.25	+0.25	14.00	4	⅝–11	0.94	1.875	3.50	1.591	2.03	0.500
364TC and 365TC	11.000	12.500	5.88	0.25	+0.25	14.00	8	⅝–11	0.94	2.375	5.62	2.021	4.28	0.625
364TSC and 365TSC	11.000	12.500	5.88	0.25	+0.25	14.00	8	⅝–11	0.94	1.875	3.50	1.591	2.03	0.500
404TC and 405TC	11.000	12.500	6.62	0.25	+0.25	15.50	8	⅝–11	0.94	2.875	7.00	2.450	5.65	0.750
404TSC and 405TSC	11.000	12.500	6.62	0.25	+0.25	15.50	8	⅝–11	0.94	2.125	4.00	1.845	2.78	0.500
444 TC and 445TC	14.000	16.000	7.50	0.25	+0.25	18.00	8	⅝–11	0.94	3.375	8.25	2.880	6.91	0.875
444TSC and 445TSC	14.000	16.000	7.50	0.25	+0.25	18.00	8	⅝–11	0.94	2.375	4.50	2.021	3.03	0.625
500 frame series	14.500	16.500	...	0.25	+0.25	18.00	4	⅝–11	0.94	...	...	...	...	...

All dimensions in inches.

*For frames 182TC and 184TC, and 213TC through 500TC, the centerline of the bolt holes shall be within 0.025 inch of true location. True location is defined as angular and diametrical location with reference to the centerline of the AK dimension.
†The tolerance on this BB dimension shall be +0.00 inch, −0.06 inch.
‡These BD dimensions are nominal dimensions.

NOTE I—For the meaning of the letter dimensions, see MG 1-4.01 and Fig. 4-3.

NOTE II—For frames 42C to 445 TSC, see MG 1-11.31 for dimensions A, B, D, E, 2F, and H.

NOTE III—For tolerances on shaft extension diameters and keyseats, see MG 1-4.05.

NOTE IV—For tolerances on AK dimensions, face runout and permissible eccentricity of mounting rabbet, see MG 1-4.07.

NOTE V—It is recommended that all machines with keyseats cut in the shaft extention for pulley, coupling, pinion, and so forth, be furnished with a key unless otherwise specified by the purchaser. (Approved as Authorized Engineering Information.)

NOTE VI—Frames 42 to 56H, inclusive—If the shaft extension length of the motor is not suitable for the application, it is recommended that deviations from this length be in 0.25-inch increments. (Approved as Authorized Engineering Information 3-8-1983.)

Frames 42C and 48C—Suggested Standard for Future Design 6-22-1950, revised 11-12-1953; 11-15-1956; 11-14-1957; 11-13-1958; 5-24-1960; reaffirmed 8-19-1964, revised 7-7-1965; reffirmed 11-21-1968, revised 7-14-1971; 5-17-1972; 9-7-1977; 5-15-1978.
Frames 56C to 500 frames series, incl.—Suggested Standard for Future Design 7-7-1965, reaffirmed 11-21-1968, NEMA Standard 7-16-1969, revised 11-13-1969; 11-12-1970; 7-14-1971; 5-17-1972; 9-7-1977; 5-15-1978.

● Editorially revised.

9009279 0003382 369

9009279 0003383 2T5

MG 1-11.36 Dimensions for Type FC Face Mounting for Accessories on End Opposite Drive of Alternating-current Motors

Frame Designations	FAJ	FAK	FBB Min	FBD Max	FBF Hole			Hole for Accessory Leads‡	
					Number	Tap Size	Bolt Penetration Allowance	DP	Diameter
143TFC and 145TFC	5.875	4.500	0.16*	6.50†	4	$\frac{3}{8}$–16	0.56	2.81	0.41
182TFC and 184TFC	5.875	4.500	0.16*	6.50†	4	$\frac{3}{8}$–16	0.56	2.81	0.41
213TFC and 215TFC	7.250	8.500	0.25	9.00	4	$\frac{1}{2}$–13	0.75	3.81	0.62
254TFC and 256TFC	7.250	8.500	0.25	10.00	4	$\frac{1}{2}$–13	0.75	3.81	0.62
284TFC and 286TFC	9.000	10.500	0.25	11.25	4	$\frac{1}{2}$–13	0.75	4.50	0.62
324TFC and 326TFC	11.000	12.500	0.25	14.00	4	$\frac{5}{8}$–11	0.94	5.25	0.62

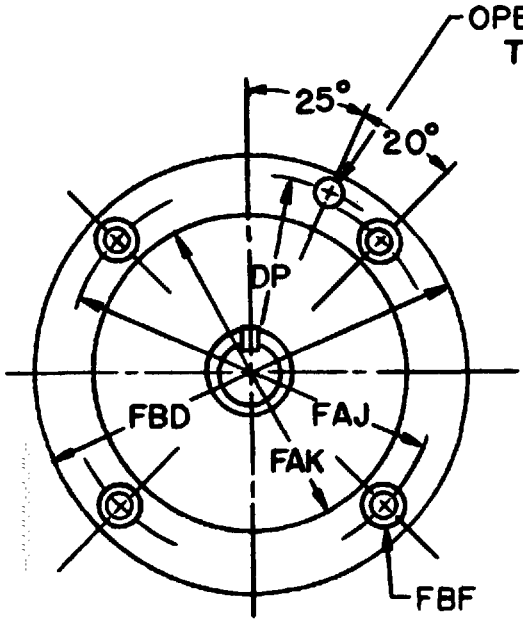

143TFC to 184TFC frames, incl.

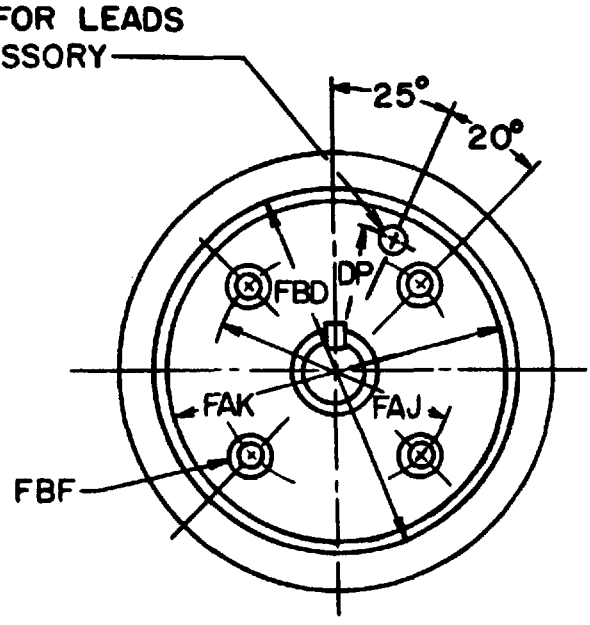

213TFC to 326TFC frames, incl.

All dimensions in inches.

*The tolerance on this FFB dimension shall be +0.00, −0.06 inch. ●

† This BD dimension is a nominal dimension.

‡ When a hole is required in the Type C face for accessory leads, the hole shall be located within the available area defined by a circle located in accordance with the figure and the table.

NOTE I—Standards have not been developed for the FU, FAH, FBC and keyseat dimensions.
NOTE II—For the meaning of the letter dimensions, see MG 1-4.01.
NOTE III—For tolerance on FAK dimensions, face runout and permissible eccentricity of mounting rabbet, see MG 1-4.07. For permissible shaft runout, see MG 1-4.05.

NEMA Standard 11-13-1969, revised 5-17-1972; 5-15-1978.

● Editorially revised.

Copyright National Electrical Manufacturers Association
Provided by IHS under license with NEMA
No reproduction or networking permitted without license from IHS Not for Resale

Copyright National Electrical Manufacturers Association
Provided by IHS under license with NEMA
No reproduction or networking permitted without license from IHS

MG 1-11.37 Dimensions for Type D Flange-mounted Foot or Footless Alternating-current Motors

Frame Designations	AJ	AK	BA	BB*	BC	BD Max	BE Nom	BF Hole			U	AH	Keyseat		
								Number	Size	Recommended Bolt Length			R	ES Min	S
143TD and 145TD	10.00	9.000	2.75	0.25	0.00	11.00	0.50	4	0.53	1.25	0.8750	2.25	0.771	1.41	0.188
182TD and 184TD	10.00	9.000	3.50	0.25	0.00	11.00	0.50	4	0.53	1.25	1.1250	2.75	0.986	1.78	0.250
213TD and 215TD	10.00	9.000	4.25	0.25	0.00	11.00	0.50	4	0.53	1.25	1.3750	3.38	1.201	2.41	0.312
254TD and 256TD	12.50	11.000	4.75	0.25	0.00	14.00	0.75	4	0.81	2.00	1.625	4.00	1.416	2.91	0.375
284TD and 286TD	12.50	11.000	4.75	0.25	0.00	14.00	0.75	4	0.81	2.00	1.875	4.62	1.591	3.28	0.500
284TSD and 286TSD	12.50	11.000	4.75	0.25	0.00	14.00	0.75	4	0.81	2.00	1.625	3.25	1.416	1.91	0.375
324TD and 326TD	16.00	14.000	5.25	0.25	0.00	18.00	0.75	4	0.81	2.00	2.125	5.25	1.845	3.91	0.500
324TSD and 326TSD	16.00	14.000	5.25	0.25	0.00	18.00	0.75	4	0.81	2.00	1.875	3.75	1.591	2.03	0.500
364TD and 365TD	16.00	14.000	5.88	0.25	0.00	18.00	0.75	4	0.81	2.00	2.375	5.88	2.021	4.28	0.625
364TSD and 365TSD	16.00	14.000	5.88	0.25	0.00	18.00	0.75	4	0.81	2.00	1.875	3.75	1.591	2.03	0.500
404TD and 405TD	20.00	18.000	6.62	0.25	0.00	22.00	1.00	8	0.81	2.25	2.875	7.25	2.450	5.65	0.750
404TSD and 405TSD	20.00	18.000	6.62	0.25	0.00	22.00	1.00	8	0.81	2.25	2.125	4.25	1.845	2.78	0.500
444TD and 445TD	20.00	18.000	7.50	0.25	0.00	22.00	1.00	8	0.81	2.25	3.375	8.50	2.880	6.91	0.875
444TSD and 445TSD	20.00	18.000	7.50	0.25	0.00	22.00	1.00	8	0.81	2.25	2.375	4.75	2.021	3.03	0.625
500 frame series	22.00	18.000	...	0.25	0.00	25.00	...	8	0.81	...	...	...	...	...	...

All dimensions in inches.
* Tolerance is +0.00 inch, −0.06 inch.
NOTE I—For the meaning of the letter dimensions, see MG 1-4.01 and Fig. 4-4.
NOTE II—For frames 143TD-445TSD, see MG 1-11.31 for dimensions A, B, D, E, 2F and H. For the 500 frame series, see MG 1-11.33 for dimensions D, E, 2F and BA.
NOTE III—For tolerances on shaft extension diameters and keyseats, see MG 1-4.05.
NOTE IV—For tolerance on AK dimensions, face runout and permissible eccentricity of mounting rabbet, see MG 1-4.07.

Suggested Standard for Future Design 7-7-1965, reaffirmed 11-21-1968, NEMA Standard 7-16-1969, revised 11-13-1969; 11-12-1970; 7-14-1971; 5-17-1972; 1-28-1976.

9009279 0003384 131
Not for Resale

9009279 0003385 078

SECTION II

FRACTIONAL- AND INTEGRAL-HORSEPOWER MACHINES

Part 11. Dimensions— DC Motors and Generators

The standards in this Part 11 of Section II cover direct-current motors and generators built in frames with continuous dripproof ratings, or equivalent capacities, up to and including:

motors: 1.25 horsepower per rpm, open type.
generators: 1.0 kilowatt per rpm, open type.

Copyright National Electrical Manufacturers Association
Provided by IHS under license with NEMA
No reproduction or networking permitted without license from IHS
Not for Resale

9009279 0003386 T04

Part 11

DIMENSIONS
DC FRACTIONAL- AND INTEGRAL-HORSEPOWER MOTORS AND GENERATORS

MG 1-11.60 Dimensions for Direct-current Fractional-horsepower Motors with Single Straight Shaft Extension ▲

Frame Designations	A Max	B Max	D*	E	2F†	BA	H† Slot	U	N-W	Keyseat R	Keyseat ES Min	Keyseat S
42	...	...	2.62	1.75	1.69	2.06	0.28	0.3750	1.12	0.328	...	flat
48	...	...	3.00	2.12	2.75	2.50	0.34	0.5000	1.50	0.453	...	flat
56	...	...	3.50	2.44	3.00	2.75	0.34	0.6250	1.88	0.517	1.41	0.188
56H	...	...	3.50	2.44	5.00	2.75	0.34	0.6250	1.88	0.517	1.41	0.188

All dimensions in inches.

*The tolerance on the D dimension for rigid base motors shall be +0.00 inch, −0.06 inch. No tolerance has been established for the D dimension of resilient mounted motors.
† The tolerance for the 2F dimension shall be ±0.03 inch and for the H dimension (width of slot) shall be +0.05 inch, −0 inch.
NOTE I—For the meaning of the letter dimensions, see MG 1-4.01 and Figs. 4-1 and 4-2.
NOTE II—For tolerances on shaft extension diameters and keyseats, see MG 1-4.05.
NOTE III—It is recommended that all machines with keyseats cut in the shaft extension for pulley, coupling, pinion, and so forth, be furnished with a key unless otherwise specified by the purchaser. (Approved as Authorized Engineering Information 5-12-1982.)
NOTE IV—If the shaft extension length of the motor is not suitable for the application, it is recommended that deviations from this length be in 0.25-inch increments (Approved as Authorized Engineering Information 5-12-1982.)

NEMA Standard 6-24-1949, revised 11-15-1956; 11-17-1960; 1-21-1964; 11-12-1964; 1-25-1972; 5-12-1982.

▲ Revised.

Copyright National Electrical Manufacturers Association
Provided by IHS under license with NEMA
No reproduction or networking permitted without license from IHS
Not for Resale

9009279 0003387 940

MG 1-11.61 Dimensions for Foot-mounted Industrial Direct-current Motors and Generators

Frame Designations	A Max	B Max	D*	E†	2F†	BA	H† Hole	AL	AM	AO	AR	AU	AX	AY Max Bases	BT
182AT	9.00	6.50	4.50	3.75	4.50	2.75	0.41	12.75	9.50	4.50	4.25	0.50	1.50	0.50	3.00
183AT	9.00	7.00	4.50	3.75	5.00	2.75	0.41	12.75	10.00	4.50	4.50	0.50	1.50	0.50	3.00
184AT	9.00	7.50	4.50	3.75	5.50	2.75	0.41	12.75	10.50	4.50	4.75	0.50	1.50	0.50	3.00
185AT	9.00	8.25	4.50	3.75	6.25	2.75	0.41	12.75	11.25	4.50	5.12	0.50	1.50	0.50	3.00
186AT	9.00	9.00	4.50	3.75	7.00	2.75	0.41	12.75	12.00	4.50	5.50	0.50	1.50	0.50	3.00
187AT	9.00	10.00	4.50	3.75	8.00	2.75	0.41	12.75	13.00	4.50	6.00	0.50	1.50	0.50	3.00
188AT	9.00	11.00	4.50	3.75	9.00	2.75	0.41	12.75	14.00	4.50	6.50	0.50	1.50	0.50	3.00
189AT	9.00	12.00	4.50	3.75	10.00	2.75	0.41	12.75	15.00	4.50	7.00	0.50	1.50	0.50	3.00
1810AT	9.00	13.00	4.50	3.75	11.00	2.75	0.41	12.75	16.00	4.50	7.50	0.50	1.50	0.50	3.00
213AT	10.50	7.50	5.25	4.25	5.50	3.50	0.41	15.00	11.00	5.25	4.75	0.50	1.75	0.50	3.50
214AT	10.50	8.25	5.25	4.25	6.25	3.50	0.41	15.00	11.75	5.25	5.12	0.50	1.75	0.50	3.50
215AT	10.50	9.00	5.25	4.25	7.00	3.50	0.41	15.00	12.50	5.25	5.50	0.50	1.75	0.50	3.50
216AT	10.50	10.00	5.25	4.25	8.00	3.50	0.41	15.00	13.50	5.25	6.00	0.50	1.75	0.50	3.50
217AT	10.50	11.00	5.25	4.25	9.00	3.50	0.41	15.00	14.50	5.25	6.50	0.50	1.75	0.50	3.50
218AT	10.50	12.00	5.25	4.25	10.00	3.50	0.41	15.00	15.50	5.25	7.00	0.50	1.75	0.50	3.50
219AT	10.50	13.00	5.25	4.25	11.00	3.50	0.41	15.00	16.50	5.25	7.50	0.50	1.75	0.50	3.50
2110AT	10.50	14.50	5.25	4.25	12.50	3.50	0.41	15.00	18.00	5.25	8.25	0.50	1.75	0.50	3.50
253AT	12.50	9.50	6.25	5.00	7.00	4.25	0.53	17.75	13.88	6.25	6.00	0.62	2.00	0.62	4.00
254AT	12.50	10.75	6.25	5.00	8.25	4.25	0.53	17.75	15.12	6.25	6.62	0.62	2.00	0.62	4.00
255AT	12.50	11.50	6.25	5.00	9.00	4.25	0.53	17.75	15.88	6.25	7.00	0.62	2.00	0.62	4.00
256AT	12.50	12.50	6.25	5.00	10.00	4.25	0.53	17.75	16.88	6.25	7.50	0.62	2.00	0.62	4.00
257AT	12.50	13.50	6.25	5.00	11.00	4.25	0.53	17.75	17.88	6.25	8.00	0.62	2.00	0.62	4.00
258AT	12.50	15.00	6.25	5.00	12.50	4.25	0.53	17.75	19.38	6.25	8.75	0.62	2.00	0.62	4.00
259AT	12.50	16.50	6.25	5.00	14.00	4.25	0.53	17.75	20.88	6.25	9.50	0.62	2.00	0.62	4.00
283AT	14.00	11.00	7.00	5.50	8.00	4.75	0.53	19.75	15.38	7.00	6.75	0.62	2.00	0.62	4.50
284AT	14.00	12.50	7.00	5.50	9.50	4.75	0.53	19.75	16.88	7.00	7.50	0.62	2.00	0.62	4.50
285AT	14.00	13.00	7.00	5.50	10.00	4.75	0.53	19.75	17.38	7.00	7.75	0.62	2.00	0.62	4.50
286AT	14.00	14.00	7.00	5.50	11.00	4.75	0.53	19.75	18.38	7.00	8.25	0.62	2.00	0.62	4.50
287AT	14.00	15.50	7.00	5.50	12.50	4.75	0.53	19.75	19.88	7.00	9.00	0.62	2.00	0.62	4.50
288AT	14.00	17.00	7.00	5.50	14.00	4.75	0.53	19.75	21.38	7.00	9.75	0.62	2.00	0.62	4.50
289AT	14.00	19.00	7.00	5.50	16.00	4.75	0.53	19.75	23.38	7.00	10.75	0.62	2.00	0.62	4.50
323AT	16.00	12.50	8.00	6.25	9.00	5.25	0.66	22.75	17.75	8.00	7.75	0.75	2.50	0.75	5.25
324AT	16.00	14.00	8.00	6.25	10.50	5.25	0.66	22.75	19.25	8.00	8.50	0.75	2.50	0.75	5.25
325AT	16.00	14.50	8.00	6.25	11.00	5.25	0.66	22.75	19.75	8.00	8.75	0.75	2.50	0.75	5.25
326AT	16.00	15.50	8.00	6.25	12.00	5.25	0.66	22.75	20.75	8.00	9.25	0.75	2.50	0.75	5.25
327AT	16.00	17.50	8.00	6.25	14.00	5.25	0.66	22.75	22.75	8.00	10.25	0.75	2.50	0.75	5.25
328AT	16.00	19.50	8.00	6.25	16.00	5.25	0.66	22.75	24.75	8.00	11.25	0.75	2.50	0.75	5.25
329AT	16.00	21.50	8.00	6.25	18.00	5.25	0.66	22.75	26.75	8.00	12.25	0.75	2.50	0.75	5.25

See Part 11, page 16, for notes.

(*Continued*)

Copyright National Electrical Manufacturers Association
Provided by IHS under license with NEMA
No reproduction or networking permitted without license from IHS
Not for Resale

Copyright National Electrical Manufacturers Association
Provided by IHS under license with NEMA
No reproduction or networking permitted without license from IHS
Not for Resale

MG 1-11.61 (*Continued*)

Frame Designations	A Max	B Max	D*	E†	2F†	BA	H† Hole	AL	AM	AO	AR	AU	AX	AY Max Bases	BT
363AT	18.00	14.00	9.00	7.00	10.00	5.88	0.81	25.50	19.25	9.00	8.25	0.88	2.50	0.75	6.00
364AT	18.00	15.25	9.00	7.00	11.25	5.88	0.81	25.50	20.50	9.00	9.12	0.88	2.50	0.75	6.00
365AT	18.00	16.25	9.00	7.00	12.25	5.88	0.81	25.50	21.50	9.00	9.62	0.88	2.50	0.75	6.00
366AT	18.00	18.00	9.00	7.00	14.00	5.88	0.81	25.50	23.25	9.00	10.50	0.88	2.50	0.75	6.00
367AT	18.00	20.00	9.00	7.00	16.00	5.88	0.81	25.50	25.25	9.00	11.50	0.88	2.50	0.75	6.00
368AT	18.00	22.00	9.00	7.00	18.00	5.88	0.81	25.50	27.25	9.00	12.50	0.88	2.50	0.75	6.00
369AT	18.00	24.00	9.00	7.00	20.00	5.88	0.81	25.50	29.25	9.00	13.50	0.88	2.50	0.75	6.00
403AT	20.00	15.00	10.00	8.00	11.00	6.62	0.94	28.75	21.12	10.00	9.25	1.00	3.00	0.88	7.00
404AT	20.00	16.25	10.00	8.00	12.25	6.62	0.94	28.75	22.38	10.00	9.88	1.00	3.00	0.88	7.00
405AT	20.00	17.75	10.00	8.00	13.75	6.62	0.94	28.75	23.88	10.00	10.62	1.00	3.00	0.88	7.00
406AT	20.00	20.00	10.00	8.00	16.00	6.62	0.94	28.75	26.12	10.00	11.75	1.00	3.00	0.88	7.00
407AT	20.00	22.00	10.00	8.00	18.00	6.62	0.94	28.75	28.12	10.00	12.75	1.00	3.00	0.88	7.00
408AT	20.00	24.00	10.00	8.00	20.00	6.62	0.94	28.75	30.12	10.00	13.75	1.00	3.00	0.88	7.00
409AT	20.00	26.00	10.00	8.00	22.00	6.62	0.94	28.75	32.12	10.00	14.75	1.00	3.00	0.88	7.00
443AT	22.00	16.50	11.00	9.00	12.50	7.50	1.06	31.25	22.62	11.00	10.00	1.12	3.00	0.88	7.50
444AT	22.00	18.50	11.00	9.00	15.00	7.50	1.06	31.25	24.62	11.00	11.00	1.12	3.00	0.88	7.50
445AT	22.00	20.50	11.00	9.00	16.50	7.50	1.06	31.25	26.62	11.00	12.00	1.12	3.00	0.88	7.50
446AT	22.00	22.00	11.00	9.00	18.00	7.50	1.06	31.25	28.12	11.00	12.75	1.12	3.00	0.88	7.50
447AT	22.00	24.00	11.00	9.00	20.00	7.50	1.06	31.25	30.12	11.00	13.75	1.12	3.00	0.88	7.50
448AT	22.00	26.00	11.00	9.00	22.00	7.50	1.06	31.25	32.12	11.00	14.75	1.12	3.00	0.88	7.50
449AT	22.00	29.00	11.00	9.00	25.00	7.50	1.06	31.25	35.12	11.00	16.25	1.12	3.00	0.88	7.50
502AT	25.00	17.50	12.50	10.00	12.50	8.50	1.19	35.00	24.50	12.50	10.75	1.25	3.50	...	8.00
503AT	25.00	19.00	12.50	10.00	14.00	8.50	1.19	35.00	26.00	12.50	11.50	1.25	3.50	...	8.00
504AT	25.00	21.00	12.50	10.00	16.00	8.50	1.19	35.00	28.00	12.50	12.50	1.25	3.50	...	8.00
505AT	25.00	23.00	12.50	10.00	18.00	8.50	1.19	35.00	30.00	12.50	13.50	1.25	3.50	...	8.00
506AT	25.00	25.00	12.50	10.00	20.00	8.50	1.19	35.00	32.00	12.50	14.50	1.25	3.50	...	8.00
507AT	25.00	27.00	12.50	10.00	22.00	8.50	1.19	35.00	34.00	12.50	15.50	1.25	3.50	...	8.00
508AT	25.00	30.00	12.50	10.00	25.00	8.50	1.19	35.00	37.00	12.50	17.00	1.25	3.50	...	8.00
509AT	25.00	33.00	12.50	10.00	28.00	8.50	1.19	35.00	40.00	12.50	18.50	1.25	3.50	...	8.00
583A	29.00	21.00	14.50	11.50	16.00	10.00	1.19	38.75	29.00	14.50	13.00	1.25	4.00	...	8.50
584A	29.00	23.00	14.50	11.50	18.00	10.00	1.19	38.75	31.00	14.50	14.00	1.25	4.00	...	8.50
585A	29.00	25.00	14.50	11.50	20.00	10.00	1.19	38.75	33.00	14.50	15.00	1.25	4.00	...	8.50
586A	29.00	27.00	14.50	11.50	22.00	10.00	1.19	38.75	35.00	14.50	16.00	1.25	4.00	...	8.50
587A	29.00	30.00	14.50	11.50	25.00	10.00	1.19	38.75	38.00	14.50	17.50	1.25	4.00	...	8.50
588A	29.00	33.00	14.50	11.50	28.00	10.00	1.19	38.75	41.00	14.50	19.00	1.25	4.00	...	8.50
683A	34.00	25.00	17.00	13.50	20.00	11.50	1.19	42.50	30.75	13.50	14.00	1.38	4.25	...	9.00
684A	34.00	27.00	17.00	13.50	22.00	11.50	1.19	42.50	32.75	13.50	15.00	1.38	4.25	...	9.00
685A	34.00	30.00	17.00	13.50	25.00	11.50	1.19	42.50	35.75	13.50	16.50	1.38	4.25	...	9.00
686A	34.00	33.00	17.00	13.50	28.00	11.50	1.19	42.50	38.75	13.50	18.00	1.38	4.25	...	9.00
687A	34.00	37.00	17.00	13.50	32.00	11.50	1.19	42.50	42.75	13.50	20.00	1.38	4.25	...	9.00
688A	34.00	41.00	17.00	13.50	36.00	11.50	1.19	42.50	46.75	13.50	22.00	1.38	4.25	...	9.00

See Part 11, page 16, for notes.

(*Continued*)

Copyright National Electrical Manufacturers Association
Provided by IHS under license with NEMA
No reproduction or networking permitted without license from IHS
Not for Resale

MG 1-11.61 (*Continued*)

Frame Designations‡	Drive End—For Belt Drive						Drive End—For Direct-connected Drive‡						End Opposite Drive—Straight					
				Keyseat						Keyseat						Keyseat		
	U	N-W	V Min	R	ES Min	S	U	N-W	V Min	R	ES Min	S	FU	FN-FW	FV Min	FR	FES Min	FS
182AT-1810AT	1.1250	2.25	2.00	0.986	1.41	0.250	...	...	...	...	...	...	0.8750	1.75	1.50	0.771	0.91	0.188
213AT-2110AT	1.3750	2.75	2.50	1.201	1.78	0.312	...	...	...	...	...	...	1.1250	2.25	2.00	0.986	1.41	0.250
253AT-259AT	1.625	3.25	3.00	1.416	2.28	0.375	...	...	...	...	...	...	1.3750	2.75	2.50	1.201	1.78	0.312
283AT-289AT	1.875	3.75	3.50	1.591	2.53	0.500	...	...	...	...	...	...	1.625	3.25	3.00	1.416	2.28	0.375
323AT-329AT	2.125	4.25	4.00	1.845	3.03	0.500	...	...	...	...	...	...	1.875	3.75	3.50	1.591	2.53	0.500
363AT-369AT	2.375	4.75	4.50	2.021	3.53	0.625	...	...	...	...	...	...	2.125	4.25	4.00	1.845	3.03	0.500
403AT-409AT	2.625	5.25	5.00	2.275	4.03	0.625	...	...	...	...	...	...	2.375	4.75	4.50	2.021	3.53	0.625
443AT-449AT	2.875	5.75	5.50	2.450	4.53	0.750	...	...	...	...	...	...	2.625	5.25	5.00	2.275	4.03	0.625
502AT-509AT	3.250	6.50	6.25	2.831	5.28	0.750	...	...	...	...	...	...	2.875	5.75	5.50	2.450	4.53	0.750
583A-588A	3.250	9.75	9.50	2.831	8.28	0.750	2.875	5.75	5.50	2.450	4.28	0.750	...	...	...	...	...	...
683A-688A	3.625	10.88	10.62	3.134	9.53	0.875	3.250	6.50	6.25	2.831	5.03	0.750	...	...	...	...	...	...

All dimensions in inches.

*Frames 182AT to 329AT, inclusive—The tolerance on the D dimension shall be +0.00 inch, −0.03 inch. Frames 363AT to 688A, inclusive—The tolerance on the D dimension shall be +0.00 inch, −0.06 inch.
†The tolerance for the 2E and 2F dimensions shall be ±0.03 inch and for the H dimension shall be +0.05 inch, −0.00 inch.
‡When frames 583A through 688A have a shaft extension for direct-connected drive, the frame number shall have a suffix letter "S" (that is, 583AS).
NOTE I—For the meaning of the letter dimensions, see MG 1-4.01 and Figs. 4-1 and 4-2.
NOTE II—For tolerances on shaft extension diameters and keyseats, see MG 1-4.05.
NOTE III—It is recommended that all machines with keyseats cut in the shaft extension for pulley, coupling, pinion, and so forth be furnished with a key unless otherwise specified by the purchaser. (This note is approved as Authorized Engineering Information.)

Suggested Standard for Future Design 6-3-1956, revised 11-15-1956, NEMA Standard 11-12-1959, revised 11-9-1961; 1-21-1964; 11-14-1974.

● Editorially revised.

9009279 0003390 435

MG 1-11.61.a Dimensions for Foot-mounted Industrial Direct-current Motors ●

Frame Designations	A Max	B Max	D*	E†	2F†	BA	H† Hole	AL	AM	AO	AR	AU	AX	AY Max Bases	BT
142AT	7.00	6.75	3.50	2.75	3.50	2.75	0.34	...	...	...	...	...	...	...	...
143AT	7.00	7.25	3.50	2.75	4.00	2.75	0.34	...	...	...	...	...	...	...	...
144AT	7.00	7.75	3.50	2.75	4.50	2.75	0.34	...	...	...	...	...	...	...	...
145AT	7.00	8.25	3.50	2.75	5.00	2.75	0.34	...	...	...	...	...	...	...	...
146AT	7.00	8.75	3.50	2.75	5.50	2.75	0.34	...	...	...	...	...	...	...	...
147AT	7.00	9.50	3.50	2.75	6.25	2.75	0.34	...	...	...	...	...	...	...	...
148AT	7.00	10.25	3.50	2.75	7.00	2.75	0.34	...	...	...	...	...	...	...	...
149AT	7.00	11.25	3.50	2.75	8.00	2.75	0.34	...	...	...	...	...	...	...	...
1410AT	7.00	12.25	3.50	2.75	9.00	2.75	0.34	...	...	...	...	...	...	...	...
1411AT	7.00	13.25	3.50	2.75	10.00	2.75	0.34	...	...	...	...	...	...	...	...
1412AT	7.00	14.25	3.50	2.75	11.00	2.75	0.34	...	...	...	...	...	...	...	...
162AT	8.00	6.00	4.00	3.12	4.00	2.50	0.41	...	...	...	...	...	...	...	...
163AT	8.00	6.50	4.00	3.12	4.50	2.50	0.41	...	...	...	...	...	...	...	...
164AT	8.00	7.00	4.00	3.12	5.00	2.50	0.41	...	...	...	...	...	...	...	...
165AT	8.00	7.50	4.00	3.12	5.50	2.50	0.41	...	...	...	...	...	...	...	...
166AT	8.00	8.20	4.00	3.12	6.25	2.50	0.41	...	...	...	...	...	...	...	...
167AT	8.00	9.00	4.00	3.12	7.00	2.50	0.41	...	...	...	...	...	...	...	...
168AT	8.00	10.00	4.00	3.12	8.00	2.50	0.41	...	...	...	...	...	...	...	...
169AT	8.00	11.00	4.00	3.12	9.00	2.50	0.41	...	...	...	...	...	...	...	...
1610AT	8.00	12.00	4.00	3.12	10.00	2.50	0.41	...	...	...	...	...	...	...	...

See Part 11, Page 18, for footnotes.

(*Continued*)

● Editorially revised.

Copyright National Electrical Manufacturers Association
Provided by IHS under license with NEMA
No reproduction or networking permitted without license from IHS
Not for Resale

Copyright National Electrical Manufacturers Association
Provided by IHS under license with NEMA
No reproduction or networking permitted without license from IHS

MG 1-11.61.a (*Continued*)

Frame Designations	Drive End—For Belt Drive						Drive End—For Direct-connected Drive						End Opposite Drive—Straight					
				Keyseat						Keyseat						Keyseat		
	U	N–W	V Min	R	ES Min	S	U	N–W	V Min	R	ES Min	S	FU	FN–FW	FV Min	FR	FES Min	FS
142AT-1412AT	0.8750	1.75	1.50	0.771	0.91	0.188	...	...	...	...	...	...	0.625	1.25	1.00	0.517	0.66	0.188
162AT-1610AT	0.8750	1.75	1.50	0.771	0.91	0.188	...	...	...	...	...	...	0.625	1.25	1.00	0.517	0.66	0.188

All dimensions in inches.

* The tolerance on the D dimension shall be +0.00 inch, −0.03 inch.
† The tolerance for the 2E and 2F dimensions shall be ±0.03 inch and for the H dimension shall be +0.05 inch, −0 inch.

NOTE I — For the meaning of the letter dimensions, see MG 1-4.01 and Figs. 4-1 and 4-2.
NOTE II — For tolerances on shaft extension diameters and keyseats, see MG 1-4.05.
NOTE III— It is recommended that all machines with keyseats cut in the shaft extension for pulley, coupling, pinion, etc., be furnished with a key unless otherwise specified by the purchaser. (Approved as Authorized Engineering Information.)

Suggested Standard for Future Design 7-17-1968; revised 11-21-1968; 11-13-1969; 7-15-1970; 7-14-1971; 1-25-1972; 1-17-1974; 11-14-1974; 9-17-1981. ●

● Editorially revised.

Not for Resale

Copyright National Electrical Manufacturers Association
Provided by IHS under license with NEMA
No reproduction or networking permitted without license from IHS
Not for Resale

MG 1-11.63 Dimensions for Type C Face-mounted Direct-current Fractional-horsepower Motors ▲

Frame Designations	AJ	AK	BA	BB**	BC	BD Nom	BF Hole Number	BF Hole Tap Size	U	AH*	Keyseat R	Keyseat ES Min	Keyseat S
42C	3.750	3.000	2.062	0.16	−0.19	5.00	4	¼–20	0.3750	1.312	0.328	...	flat
48C	3.750	3.000	2.50	0.16	−0.19	5.625	4	¼–20	0.500	1.69	0.453	...	flat
56C	5.875	4.500	2.75	0.16	−0.19	6.50	4	⅜–16	0.6250	2.06	0.517	1.41	0.188

All dimensions in inches.

* If the shaft extension length of the motor is not suitable for the application, it is recommended that deviations from the length be in 0.25-inch increments.
** These BB dimensions have a tolerance of +0.00, −0.06 inch.
NOTE I—For the meaning of the letter dimension, see MG 1-4.01.
NOTE II—See MG 1-11.60 for dimensions D, E, and 2F when the motor is provided with feet.
NOTE III—For tolerances on shaft extension diameters and keyseats, see MG 1-4.05.
NOTE IV—For tolerance on AK dimensions, face runout and permissible eccentricity of mounting rabbet, see MG 1-4.07.

NEMA Standard 12-16-1971, revised 5-17-1972; 9-20-1978.

▲ Revised.

Copyright National Electrical Manufacturers Association
Provided by IHS under license with NEMA
No reproduction or networking permitted without license from IHS

9009279 0003393 144

MG 1-11.64 Dimensions for Type C Face-mounted Industrial Direct-current Motors

Frame Designations	AJ	AK	BA	BB Min	BC	BD Max	BF Hole			U	AH	Keyseat		
							Number	Tap Size	Bolt Penetration Allowance			R	ES Min	S
182ATC-1810ATC	7.250	8.500	2.75	0.25	0.12	9.00	4	½–13	0.75	1.1250	2.12	0.986	1.41	0.250
213ATC-2110ATC	7.250	8.500	3.50	0.25	0.25	9.00	4	½–13	0.75	1.3750	2.50	1.201	1.78	0.312
253ATC-259ATC	7.250	8.500	4.25	0.25	0.25	10.00	4	½–13	0.75	1.625	3.00	1.416	2.28	0.375
283ATC-289ATC	9.000	10.500	4.75	0.25	0.25	11.25	4	½–13	0.75	1.875	3.50	1.591	2.53	0.500
323ATC-329ATC	11.000	12.500	5.25	0.25	0.25	14.00	4	⅝–11	0.94	2.125	4.00	1.845	3.03	0.500

All dimensions in inches.

NOTE I—For the meaning of the letter dimensions, see MG 1-4.01 and Fig. 4-3.
NOTE II—See MG 1-11.61 for dimensions A, B, D, E, 2F, H and BA when the motor is provided with feet.
NOTE III—For tolerances on shaft extension diameters and keyseats, see MG 1-4.05.
NOTE IV—For tolerance on AK dimensions, face runout and permissible eccentricity of mounting rabbet, see MG 1-4.07.

Suggested Standard for Future Design 11-14-1957, revised 11-13-1958, NEMA Standard 11-12-1959, revised 5-21-1962; 7-7-1965; 11-21-1968; 1-25-1972; 5-17-1972; 11-14-1974; 1-28-1976.

Not for Resale

Copyright National Electrical Manufacturers Association
Provided by IHS under license with NEMA
No reproduction or networking permitted without license from IHS
Not for Resale

MG 1-11.64.a Dimensions for Type C Face-mounted Industrial Direct-current Motors ▲*

Frame Designations	AJ	AK	BA	BB†	BC	BD Max	BF Hole			U	AH	Keyseat		
							Number	Tap Size	Bolt Penetration Allowance			R	ES Min	S
142ATC-1412ATC	5.875	4.500	2.75	0.16	0.12	6.50	4	⅜ -16	0.56	0.8750	2.12	0.771	1.41	0.188
162ATC-1610ATC	5.875	4.500	2.50	0.16	0.12	6.50	4	⅜–16	0.56	0.8750	2.12	0.771	1.41	0.188

All dimensions in inches.

* See MG 1-11.61.a for dimensions A, B, D, E, 2F and H when the motor is provided with feet.
† Tolerance = + 0.00 inch, − 0.06 inch.

NOTE I— For the meaning of the letter dimensions, see MG 1-4.01 and Fig. 4-3.
NOTE II— For tolerance on shaft extension diameters and keyseat, see MG 1-4.05.
NOTE III— For tolerance on AK dimensions, face runout and permissible eccentricity of mounting rabbet, see MG 1-4.07.

Suggested Standard for Future Design 11-21-1968, revised 11-13-1969; 11-12-1970; 1-25-1972; 5-17-1972; 11-14-1974; 9-17-1981.

▲ Revised.

9009279 0003394 080

Copyright National Electrical Manufacturers Association
Provided by IHS under license with NEMA
No reproduction or networking permitted without license from IHS

MG 1-11.65 Dimensions for Type D Flange-mounted Industrial Direct-current Motors

Frame Designations	AJ	AK	BB*	BC	BD Max	BE Nom	BF Clearance Hole			U	AH	Keyseat	
							Size	Number	Recommended Bolt Length			R	S
182ATD-1810ATD	10.00	9.000	0.25	0	11.00	0.50	0.53	4	1.25	1.1250	2.25	0.986	0.250
213ATD-2110ATD	12.50	11.000	0.25	0	14.00	0.75	0.81	4	2.00	1.3750	2.75	1.201	0.312
253ATD-259ATD	16.00	14.000	0.25	0	18.00	0.75	0.81	4	2.00	1.625	3.25	1.416	0.375
283ATD-289ATD	16.00	14.000	0.25	0	18.00	0.75	0.81	4	2.00	1.875	3.75	1.591	0.500
323ATD-329ATD	16.00	14.000	0.25	0	18.00	0.75	0.81	4	2.00	2.125	4.25	1.845	0.500
363ATD-369ATD	20.00	18.000	0.25	0	22.00	1.00	0.81	8	2.25	2.375	4.75	2.021	0.625
403ATD-409ATD	22.00	18.000	0.25	0	24.00	1.00	0.81	8	2.25	2.625	5.25	2.275	0.625
443ATD-449ATD	22.00	18.000	0.25	0	24.00	1.00	0.81	8	2.25	2.875	5.75	2.450	0.750
502ATD-509ATD	30.00	28.000	0.25	0.38	32.00	1.00	0.81	8	2.50	3.250	6.88	2.831	0.750
583AD-588AD	30.00	28.000	0.25	0.38	32.00	1.00	0.81	8	2.50	3.250	10.12	2.831	0.750
583ASD-588ASD	30.00	28.000	0.25	0.38	32.00	1.00	0.81	8	2.50	2.875	6.12	2.845	0.750
683AD-688AD	35.25	33.250	0.25	0.38	37.25	1.00	0.81	8	2.50	3.625	11.25	3.134	0.875
683ASD-688ASD	35.25	33.250	0.25	0.38	37.25	1.00	0.81	8	2.50	3.250	6.88	2.831	0.750

All dimensions in inches.

* These BB dimensions have a tolerance of +0.00, −0.06 inch.

NOTE I—For the meaning of the letter dimensions, see MG 1-4.01 and Fig. 4-4.
NOTE II—See MG 1-11.61 for dimensions A, B, D, E, 2F, H and BA.
NOTE III—For tolerances on shaft extension diameters and keyseats, see MG 1-4.05.
NOTE IV—For tolerance on AK dimensions, face runout and permissible eccentricity of mounting rabbet, see MG 1-4.07.

Suggested Standard for Future Design 11-14-1957, NEMA Standard 11-12-1959, revised 5-21-1962; 1-25-1972; 5-17-1972; 11-14-1974; 5-15-1978.

Not for Resale

9009279 0003396 953

MG 1-11.65.a Dimensions for Type D Flange-mounted Industrial Direct-current Motors ▲

Frame Designations	AJ	AK	BB*	BC	BD Max	BE Nom	BF Hole			U	AH	Keyseat	
							Size	Number	Recommended Bolt Length			R	S
582ATD-589ATD	30.00	28.000	0.25	0.38	32.00	1.00	0.81	8	2.50	3.750	7.88	3.261	0.875
681ATD-689ATD	35.25	33.250	0.25	0.38	37.25	1.00	0.81	8	2.50	4.250	8.88	3.690	1.000

All dimensions in inches.

* These BB dimensions have a tolerance of +0.00, −0.06 inch.

NOTE I—For the meaning of the letter dimensions, see MG 1-4.01 and Fig. 4-4.
NOTE II—See MG 1-11.61.a for dimensions A, B, D, E, 2F, H and BA.
NOTE III—For tolerances on shaft extension diameters and keyseat, see MG 1-4.05.
NOTE IV—For tolerance on AK dimensions, face runout and permissible eccentricity of mounting rabbet, see MG 1-4.07.

Suggested Standard for Future Design 7-16-1969, revised 11-13-1969, 1-25-1972; 5-17-1972; 11-14-1974; 5-15-1978.

▲ Revised.

Copyright National Electrical Manufacturers Association
Provided by IHS under license with NEMA
No reproduction or networking permitted without license from IHS
Not for Resale

9009279 0003397 89T

MG 1-11.66 Base Dimensions for Types P and PH Vertical Solid-shaft Industrial Direct-current Motors

AJ	AK	BB Min	BD Max	BF Clearance Hole	
				Number	Size
9.125	8.250	0.19	10.00	4	0.44
9.125	8.250	0.19	12.00	4	0.44
14.750	13.500	0.25	16.50	4	0.69
14.750	13.500	0.25	20.00	4	0.69
14.750	13.500	0.25	24.50	4	0.69

All dimensions in inches.

Tolerances (see MG 1-4.06)—
AK dimension—
For 8.250 inches, +0.003 inch, −0.000 inch.
For 13.500 inches, +0.005 inch, −0.000 inch.
Face runout—
For AJ of 9.125 inches, 0.004-inch indicator reading.
For AJ of 14.750 inches, 0.007-inch indicator reading.
Permissible eccentricity of mounting rabbet—
For AK of 8.250 inches, 0.004-inch indicator reading.
For AK of 13.500 inches, 0.007-inch indicator reading.
NOTE—For the meaning of the letter dimensions, see MG 1-4.01.

Suggested Standard for Future Design 11-14-1957, revised 6-1-1959, NEMA Standard 11-12-1959.

MG 1-11.67 Dimensions for Type FC Face Mounting for Accessories on End Opposite Drive of Industrial Direct-current Motors

FAJ	FAK	FBB*	FBC	FBF Hole		
				Number	Tap Size	Bolt Penetration Allowance
5.875	4.500	0.16	0.12	4	3/8–16	0.56
7.250	8.500	0.31	0.25	4	1/2–13	0.75
9.000	10.500	0.31	0.25	4	1/2–13	0.75
11.000	12.500	0.31	0.25	4	5/8–11	0.94

All dimensions in inches.

* Tolerances—FBB dimension—
For 0.16 inch, +0.000 inch, −0.031 inch.
For 0.31 inch, +0.000 inch, −0.062 inch.
NOTE I—For the meaning of the letter dimensions, see MG 1-4.01 and Fig. 4-3.
NOTE II—For tolerance on FAK dimensions, face runout and permissible eccentricity of mounting rabbet, see MG 1-4.07. For permissible shaft runout, see MG 1-4.05.

Suggested Standard for Future Design 7-17-1968, revised 7-16-1969; 11-13-1969; 5-17-1972; NEMA Standard 11-14-1974.

Copyright National Electrical Manufacturers Association
Provided by IHS under license with NEMA
No reproduction or networking permitted without license from IHS
Not for Resale

SECTION II

FRACTIONAL- AND INTEGRAL-HORSEPOWER MACHINES

Part 12. Tests and Performance— AC and DC Motors

The standards in this Part 12 of Section II cover the following machines:

A. Alternating-current Motors

Alternating-current motors up to and including the ratings built in frames corresponding to the continuous open-type ratings given in the table below:

Synchronous Speed	Motors, Squirrel-cage and Wound Rotor, Hp	Motors, Synchronous, Hp	
		Power Factor	
		Unity	0.8
3600	500	200	150
1800	500	200	150
1200	350	200	150
900	250	150	125
720	200	125	100
600	150	100	75
514	125	75	60

B. Direct-current Motors

Direct-current motors built in frames with continuous dripproof ratings, or equivalent capacities, up to and including 1.25 horsepower per rpm, open type.

Copyright National Electrical Manufacturers Association
Provided by IHS under license with NEMA
No reproduction or networking permitted without license from IHS -- Not for Resale

9009279 0003399 662

Part 12
TESTS AND PERFORMANCE
AC AND DC FRACTIONAL- AND INTEGRAL-HORSEPOWER MOTORS

MG 1-12.02 High-potential Test—Safety Precautions and Test Procedure

See MG 1-3.01.

NEMA Standard 6-24-1949; revised 11-17-1949; 11-11-1965; 11-16-1967; 1-5-1977.

MG 1-12.03 High-potential Test Voltages for Universal, Induction, and Direct-current Motors▲

The high-potential test voltage specified in the following table shall be applied to the windings of each new machine in accordance with the test procedures specified in MG 1-3.01.

Category	Effective Test Voltage‡
A. Universal Motors (rated for operation on circuits not exceeding 250 volts)	
1. Motors rated 1/2 hp and larger and all motors for portable tools	1000 volts + 2 times the rated voltage of the motor
2. All other motors†	1000 volts
B. Induction and Nonexcited Synchronous Motors	
1. Motors rated 1/2 horsepower and larger	
a. Stator windings	1000 volts + 2 times the rated volatage of the motor
b. For secondary windings of wound rotors of induction motors	1000 volts +2 times the maximum voltage induced between collector rings on open circuit at standstill (or running if under this condition the voltage is greater) with rated primary voltage applied to the stator terminals
c. For secondary windings of wound rotors of reversing motors	1000 volts + 4 times the maximum voltage induced between collector rings on open circuit at standstill with rated primary voltage applied to the stator terminals
2. Motors rated less than 1/2 horsepower	
a. Rated 250 volts or less	1000 volts
b. Rated above 250 volts	1000 volts + 2 times the rated voltage of the motor
C. Direct-current Motors	
1. Motors rated 1/2 horsepower and larger	
a. Armature or field windings for use on adjustable-voltage electronic power supply	1000 volts + 2 times the ac line-to-line voltage of the power supply selected for the basis of rating
b. All other armature or field windings	1000 volts + 2 times the rated voltage* of the motor
2. Motors rated less than 1/2 horsepower	
a. 240 volts or less	1000 volts
b. Rated above 240 volts	See pars. C.1.a and C.1.b above

† Complete motors less than 1/2 horsepower shall be considered to be in the "all other" category unless marked to indicate that they are motors for portable tools.

* Where the voltage rating of a separately excited field of a direct-current motor or generator is not stated, it shall be assumed to be 1.5 times the field resistance in ohms at 25°C times the rated field current.

NEMA Standard 6-24-1949, revised 11-16-1967; 11-21-1968; 7-15-1970; 12-16-1971; 1-5-1977; 9-7-1977; 3-19-1980; 3-8-1983.

NOTE I: Certain applications may require high-potential test voltages higher than those specified.

NOTE II: The normal production high-potential test voltage may be 1.2 times the specified 1-minute high-potential test voltage, applied for 1 second. (See MG 1-3.01, par. F.)

NOTE III: To avoid excessive stressing of the insulation, repeated application of the high-potential test voltage is not recommended. Immediately after manufacture, when equipment is installed or assembled with other apparatus and a high-potential test of the entire assembly is required, it is recommended that the test voltage not exceed 85 percent of the original test voltage or, when in an assembled group, not exceed 85 percent of the lowest test voltage of that group. (See MG 1-3.01, par. K.)

Authorized Engineering Information 3-8-1983.

▲ Revised.

Copyright National Electrical Manufacturers Association
Provided by IHS under license with NEMA
No reproduction or networking permitted without license from IHS
Not for Resale

MG 1-12.03.a Production High-potential Testing of Fractional-horsepower Motors▲

Dielectric failure in high-potential production testing of fractional-horsepower motors shall be a resistive leakage current exceeding 10 milliamperes when tested in accordance with MG 1-12.02 and MG 1-12.03 and when using a dielectric tester with a capacitive compensating circuit as specified in MG 1-3.01.

NEMA Standard 5-17-1972, revised 3-19-1980.

A. Dielectric Tester

The dielectric tester should indicate by visual and/or audible means when the resistive leakage current exceeds 10 milliamperes. The dielectric tester should preferably be designed to limit the leakage current to a nondestructive value at the high-potential voltage.

B. Evaluation of Insulation Systems by a Dielectric Test

The definition of dielectric failure per ASTM D 149 is based upon observation of actual rupture of insulation as positive evidence of voltage breakdown. In fractional-horsepower motors, a suitable evaluation of insulation quality in production testing may be made without complete rupture of the insulation to ground. As a quality control procedure during manufacture, measurement of the resistive leakage current may be taken as a true evaluation of the effectiveness of the insulation system.

Authorized Engineering Information 5-17-1972; revised 5-17-1976; 3-19-1980.

MG 1-12.04 Repetitive Surge Test for Fractional- and Integral-horsepower Motors

Many manufacturers use a repetitive surge test as a quality control test for the components of motors; for example, stators and rotors. When a large number of motors of a single design are to be tested, a repetitive surge test is a quick and economical test to make to detect the following faults:

1. Grounded windings
2. Short circuits between turns
3. Short circuits between windings
4. Incorrect connections
5. Incorrect number of turns
6. Misplaced conductors or insulation

The repetitive surge test compares an unknown winding with a known winding or a winding assumed to be satisfactory. This is accomplished by superimposing on an oscilloscope the traces of the surge voltage at the terminals of the windings. Major faults are easily detected but a skilled operator is required to distinguish between minor faults; for example, a slipped slot cell and the harmless deviations in the traces which occur when windings are produced by two or more operators who place the coils or form the end turns in slightly different ways.

Unfortunately, the repetitive surge test has disadvantages which limit its general usage, such as the necessity for elaborate preliminary tests before a surge test can be made on production units. For example, voltage distribution through the winding must be investigated because resonant conditions may exist which would cause abnormally high or low stresses at some point in the insulation system of the motor component. Elaborate preliminary tests can seldom be justified when a small number of components is involved because comparatively small changes in design may require additional preliminary tests. When a repetitive surge test is made, the surge voltage level and other test conditions should be based upon data obtained from laboratory tests made on the particular design (or designs) of the motors involved.

When a rotor or stator has two or more identical windings, for example, a polyphase stator, each winding may be tested against the other because it is unlikely that any two of the windings will have identical faults. To make it practicable to surge test rotors or stators of similar motor designs one at a time, it is essential that sufficient data be accumulated by the preliminary tests on several individual designs. When a rotor or stator does not have two identical windings, for example, single-phase stators and direct-current armatures, a minimum of two of the same component is required for the repetitive surge test. In the event that a fault is disclosed by the test, a minimum of three units is required to determine which one had the fault.

It should be noted that, except by undertaking extensive comparative breakdown tests, there is, at present, no satisfactory way of determining the surge test voltage equivalent to a 60-hertz high-potential test.

Authorized Engineering Information 11-11-1954, revised 11-16-1967.

▲ Revised.

Copyright National Electrical Manufacturers Association
Provided by IHS under license with NEMA
No reproduction or networking permitted without license from IHS
Not for Resale

9009279 0003401 040

MG 1-12.05 Dynamic Balance of Motor

The balance for integral-horsepower alternating-current and direct-current motors built in a 143 and larger frame, when measured in accordance with MG 1-12.06, shall not exceed the following:

Speed, Rpm*	Maximum Amplitude, Inches, Peak to Peak
3000–4000, incl.	0.001
1500–2999, incl.	0.0015
1000–1499, incl.	0.002
999 and below	0.0025

* For alternating-current motors, use the highest synchronous speed. For direct-current motors, use the highest rated speed. For series and universal motors, use the operating speed.

Recommended Standard 6-4-1948, NEMA Standard 11-12-1953, revised 11-15-1956; 11-17-1966; 7-15-1970; 12-16-1971.

MG 1-12.06 Method of Measuring Dynamic Balance

A. Place the motor on an elastic mounting so proportioned that the up and down natural frequency shall be at least as low as 25 percent of the test speed of the motor. To accomplish this it is required that the elastic mounting be deflected downwards *at least* by the amounts shown in the following table due to the weight of the motor. When a flexible pad is used, the compression should in no case be more than 50 percent the original thickness of the flexible pad; otherwise, the supports may be too stiff.

Rpm	Compression, Inches
900	1
1800	$\frac{1}{4}$
3600	$\frac{1}{16}$
7200	$\frac{1}{64}$

NOTE—The required deflection is inversely proportional to the speed squared.

B. The amplitude of vibration shall be measured on the bearing housing, in any direction, with the axis of the shaft in the normal position. With the motor operating at no load, it shall be balanced with one half a standard key in the keyseat; that is, a key of full length flush with the top of the keyseat. An alternating-current motor shall be operated with rated voltage and frequency applied and a direct-current motor shall be operated from a ripple-free power supply.

Recommended Standard 4-27-1944; NEMA Standard 5-17-1953, revised 11-17-1960; 11-17-1966; 12-16-1971.

MG 1-12.08 Bearing Losses—Vertical Pump Motors

The added losses in horsepower in angular contact bearings used on vertical pump motors, due to added load over that incurred by the motor rotor, should be calculated by the following formula:

Added losses in horsepower = $2.4 \times 10^{-8} \times$ added load in lbs $\times$ revolutions per minute $\times$ pitch diameter in inches of the balls in the ball bearing.

Recommended Standard 7-21-1937; Authorized Engineering Information 11-12-1953.

Copyright National Electrical Manufacturers Association
Provided by IHS under license with NEMA
No reproduction or networking permitted without license from IHS
Not for Resale

9009279 0003402 T87

SECTION II

FRACTIONAL- AND INTEGRAL-HORSEPOWER MACHINES

Part 12. Tests and Performance—AC Motors

The standards in this Part 12 of Section II cover alternating-current motors up to and including the ratings built in frames corresponding to the continuous open-type ratings given in the table below:

Synchronous Speed	Motors, Squirrel-cage and Wound Rotor, Hp	Motors, Synchronous, Hp	
		Power Factor	
		Unity	0.8
3600	500	200	150
1800	500	200	150
1200	350	200	150
900	250	150	125
720	200	125	100
600	150	100	75
514	125	75	60

Copyright National Electrical Manufacturers Association
Provided by IHS under license with NEMA — —
No reproduction or networking permitted without license from IHS
Not for Resale

9009279 0003403 913

Part 12

TESTS AND PERFORMANCE
AC FRACTIONAL- AND INTEGRAL-HORSEPOWER MOTORS

MG 1-12.30 Test Methods

Tests to determine performance characteristics shall be made in accordance with the following:

1. For single-phase motors—IEEE Std 114, *Test Procedure for Single-phase Induction Motors.*
2. For polyphase induction motors—IEEE Std 112, *Test Procedure for Polyphase Induction Motors and Generators.*

NEMA Standard 7-7-1965.

MG 1-12.30.a Performance Characteristics

When performance characteristics are provided, they should be expressed as follows:

1. Current in amperes or percent of rated current.
2. Torque in pound-feet, pound-inches, ounce-feet, ounce-inches or percent of full-load torque.
3. Output in horsepower or percent of rated horsepower.
4. Speed in revolutions per minute or percent of synchronous speed.
5. Efficiency in percent.
6. Power factor in percent.
7. Voltage in volts or percent of rated voltage.
8. Input power in watts or kilowatts.

NOTE—If SI units are used, they should be in accordance with ISO Publication No. R-1000.

Authorized Engineering Information 5-12-1975.

MG 1-12.31 Torque Characteristics of Single-phase General-purpose Induction Motors

A. Breakdown Torque

The breakdown torque of general-purpose single-phase fractional- and integral-horsepower induction motors shall be the higher figure in each torque range as given in the table in MG 1-10.33, subject to tolerances in manufacturing and all other conditions given in MG 1-10.33.

▲ Revised.

B. Locked-rotor Torque of Fractional-horsepower Motors

The locked-rotor torque of single-phase general-purpose fractional-horsepower motors, with rated voltage and frequency applied, shall be not less than the following:

	Minimum Locked-rotor Torque, Ounce-feet					
	60-hertz Speed, Rpm			50-hertz Speed, Rpm		
Hp	3600 3450	1800 1725	1200 1140	3000 2850	1500 1425	1000 950
1/8	..	24	32	..	29	39
1/6	15	33	43	18	39	51
1/4	21	46	59	25	55	70
1/3	26	57	73	31	69	88
1/2	37	85	100	44	102	120
3/4	50	119	...	60	143	...
1	61	...	...	73	...	...

C. Locked-rotor Torque of Integral-horsepower Motors ▲

The locked-rotor torque of single-phase general-purpose integral-horsepower motors, with rated voltage and frequency applied, shall be not less than the following:

	Minimum Locked-rotor Torque, Pound-feet		
	Rpm		
Hp	3600	1800	1200
3/4	...	...	8.0
1	...	9.0	9.5
1½	4.5	12.5	13.0
2	5.5	16.0	16.0
3	7.5	22.0	23.0
5	11.0	33.0	...
7½	16.0	45.0	...
10	21.0	52.0	...

D. Pull-up Torque of Integral-horsepower Motors

The pull-up torque of single-phase general-purpose alternating-current integral-horsepower motors, with rated voltage and frequency applied, shall be not less than the rated load torque.

NEMA Standard 11-11-1948, revised 6-24-1949; 5-17-1953; 11-11-1965; 11-16-1967; 9-20-1978.

Copyright National Electrical Manufacturers Association
Provided by IHS under license with NEMA
No reproduction or networking permitted without license from IHS
Not for Resale

9009279 0003404 85T

MG 1-12.32 Locked-rotor Current of Single-phase Fractional-horsepower Motors

A. The locked-rotor current of 60-hertz, single-phase motors shall not exceed the values given in the following table:

2-, 4-, 6- AND 8-POLE, 60-HERTZ MOTORS, SINGLE PHASE

Hp	Locked-rotor Current, Amperes			
	115 Volts		230 Volts	
	Design O	Design N	Design O	Design N
1/6 and smaller	50	20	25	12
1/4	50	26	25	15
1/3	50	31	25	18
1/2	50	45	25	25
3/4	..	61	..	35
1	..	80	..	45

B. The locked-rotor currents of single-phase general-purpose fractional-horsepower motors shall not exceed the values for Design N motors.

NEMA Standard 10-29-1943, revised 11-14-1957; 5-21-1962; 11-12-1964; 11-21-1968.

MG 1-12.33 Locked-rotor Current of Single-phase Integral-horsepower Motors, Designs L and M ▲

The locked-rotor current of single-phase, 60-hertz, Design L and M motors of all types, when measured with rated voltage and frequency impressed and with the rotor locked, shall not exceed the following values:

Hp	Locked-rotor Current, Amperes		
	Design L Motors		Design M Motors
	115 Volts	230 Volts	230 Volts
1/2	45	25	...
3/4	61	35	...
1	80	45	...
1 1/2	..	50	40
2	..	65	50
3	..	90	70
5	..	135	100
7 1/2	..	200	150
10	..	260	200

NEMA Standard 8-7-1947; revised 1-23-1951; 11-21-1968; 9-20-1978.

MG 1-12.34 Locked-rotor Current of 3-phase 60-hertz Integral-horsepower Squirrel-cage Induction Motors Rated at 230 Volts

The locked-rotor current of single-speed, 3-phase, constant-speed induction motors rated at 230 volts, when measured with rated voltage and frequency impressed and with rotor locked, shall not exceed the following values:

Hp	Locked-rotor Current, Amperes*	Design Letters
1/2	20	B, D
3/4	25	B, D
1	30	B, D
1 1/2	40	B, D
2	50	B, D
3	64	B, C, D
5	92	B, C, D
7 1/2	127	B, C, D
10	162	B, C, D
15	232	B, C, D
20	290	B, C, D
25	365	B, C, D
30	435	B, C, D
40	580	B, C, D
50	725	B, C, D
60	870	B, C, D
75	1085	B, C, D
100	1450	B, C, D
125	1815	B, C, D
150	2170	B, C, D
200	2900	B, C
250	3650	B
300	4400	B
350	5100	B
400	5800	B
450	6500	B
500	7250	B

* The locked-rotor current of motors designed for voltages other than 230 volts shall be inversely proportional to the voltages.

Suggested Standard for Future Design 7-7-1965, revised 8-20-1966; 11-17-1966, NEMA Standard 11-21-1968.

MG 1-12.35 Locked-rotor Current of 3-phase 50-hertz Integral-horsepower Squirrel-cage Induction Motors Rated at 380 Volts

The locked-rotor current of single-speed, 3-phase, constant-speed induction motors rated at 380 volts, when measured with rated voltage and frequency impressed and with rotor locked, shall not exceed the values shown in Table 12-1.

NEMA Standard 11-21-1968, revised 7-16-1969.

MG 1-12.36 Torque Characteristics of Polyphase Fractional-horsepower Motors

The breakdown torque of a general-purpose polyphase squirrel-cage fractional-horsepower motor, with rated voltage and frequency applied, shall be not less than 140 percent of the breakdown torque of a single-phase general-purpose fractional-horsepower motor of the same horsepower and speed rating given in MG 1-12.31.

NOTE—The speed at breakdown torque is ordinarily much lower in fractional-horsepower polyphase motors than in fractional-horsepower single-phase motors. Higher breakdown torques are required for polyphase motors so that polyphase and single-phase motors will have interchangeable running characteristics, rating for rating, when applied to normal single-phase motor loads.

NEMA Standard 6-4-1948, revised 6-24-1949; 11-13-1969.

▲ Revised.

Copyright National Electrical Manufacturers Association
Provided by IHS under license with NEMA
No reproduction or networking permitted without license from IHS
Not for Resale

9009279 0003405 796

TABLE 12-1 (SEE MG 1-12.35)

Hp	Locked-rotor Current, Amperes*	Design Letters	Hp	Locked-rotor Current, Amperes*	Design Letters
1 or less	20	B, D	30	289	B, C, D
1½	27	B, D	40	387	B, C, D
2	34	B, D	50	482	B, C, D
3	43	B, C, D	60	578	B, C, D
5	61	B, C, D	75	722	B, C, D
7½	84	B, C, D	100	965	B, C, D
10	107	B, C, D	125	1207	B, C, D
15	154	B, C, D	150	1441	B, C, D
20	194	B, C, D	200	1927	B, C
25	243	B, C, D			

* The locked-rotor current of motors designed for voltages other than 380 volts shall be inversely proportional to the voltages.

MG 1-12.37 Locked-rotor Torque of Single-speed Polyphase Squirrel-cage Integral-horsepower Motors with Continuous Ratings▲

A. The locked-rotor torque of Design A and B, 60- and 50-hertz, single-speed, polyphase squirrel-cage motors, with rated voltage and frequency applied, shall be not less than the following values which are expressed in percent of full-load torque. For applications involving higher torque requirements, see the locked-rotor torque values for Design C and D motors.

	Synchronous Speed, Rpm						
	60 hertz	3600	1800	1200	900	720	600	514
Hp	50 hertz	3000	1500	1000	750	...	...	...
½		...	...	...	140	140	115	110
¾		...	...	175	135	135	115	110
1		...	275	170	135	135	115	110
1½		175	250	165	130	130	115	110
2		170	235	160	130	125	115	110
3		160	215	155	130	125	115	110
5		150	185	150	130	125	115	110
7½		140	175	150	125	120	115	110
10		135	165	150	125	120	115	110
15		130	160	140	125	120	115	110
20		130	150	135	125	120	115	110
25		130	150	135	125	120	115	110
30		130	150	135	125	120	115	110
40		125	140	135	125	120	115	110
50		120	140	135	125	120	115	110
60		120	140	135	125	120	115	110
75		105	140	135	125	120	115	110
100		105	125	125	125	120	115	110
125		100	110	125	120	115	115	110
150		100	110	120	120	115	115	...
200		100	100	120	120	115	...	...
250		70	80	100	100	...	...	...
300		70	80	100	...	...	...	...
350		70	80	100	...	...	...	...
400		70	80	...	...	...	...	...
450		70	80	...	...	...	...	...
500		70	80	...	...	...	...	...

(*Continued*)

▲ Revised.

Copyright National Electrical Manufacturers Association
Provided by IHS under license with NEMA
No reproduction or networking permitted without license from IHS

Not for Resale

9009279 0003406 622

B. The locked-rotor torque of Design C, 60- and 50-hertz, single-speed, polyphase squirrel-cage motors, with rated voltage and frequency applied, shall be not less than the following values which are expressed in percent of full-load torque.

	Synchronous Speed, Rpm			
	60 hertz	1800	1200	900
Hp	50 hertz	1500	1000	750
3		...	250	225
5		250	250	225
7.5		250	225	200
10		250	225	200
15		225	200	200
20–200, inclusive		200	200	200

C. The locked-rotor torque of Design D, 60- and 50-hertz, 4-, 6- and 8-pole, single-speed, polyphase squirrel-cage motors rated 150 horsepower and smaller, with rated voltage and frequency applied, shall be not less than 275 percent, expressed in percent of full-load torque.

NEMA Standard 8-7-1947, revised 6-24-1949; 11-17-1955; 11-17-1966; 7-16-1969; 9-20-1978.

MG 1-12.38 Breakdown Torque of Single-speed Polyphase Squirrel-cage Integral-horsepower Motors with Continuous Ratings▲

A. The breakdown torque of Design A and B, 60- and 50-hertz, single-speed, polyphase squirrel-cage motors, with rated voltage and frequency applied, shall be not less than the following values which are expressed in percent of full-load torque.

	Synchronous Speed, Rpm						
	60 hertz	3600	1800	1200	900	720	600	514
Hp	50 hertz	3000	1500	1000	750	...	...	...
½		...	...	...	225	200	200	200
¾		...	...	275	220	200	200	200
1		...	300	265	215	200	200	200
1½		250	280	250	210	200	200	200
2		240	270	240	210	200	200	200
3		230	250	230	205	200	200	200
5		215	225	215	205	200	200	200
7½		200	215	205	200	200	200	200
10–125, inclusive		200	200	200	200	200	200	200
150		200	200	200	200	200	200	...
200		200	200	200	200	200	...	...
250		175	175	175	175	...	...	...
300–350		175	175	175	...	...	...	...
400–500, inclusive		175	175	...	...	...	...	...

B. The breakdown torque of Design C, 60- and 50-hertz, single-speed, polyphase squirrel-cage motors, with rated voltage and frequency applied, shall be not less than the following values which are expressed in percent of full-load torque.

	Synchronous Speed, Rpm			
	60 hertz	1800	1200	900
Hp	50 hertz	1500	1000	750
3		...	225	200
5		200	200	200
7½–200, inclusive		190	190	190

NEMA Standard 1-26-1948, revised 6-24-1949; 11-17-1955; 11-17-1966; 7-16-1969; 9-20-1978.

▲ Revised.

Copyright National Electrical Manufacturers Association
Provided by IHS under license with NEMA
No reproduction or networking permitted without license from IHS
Not for Resale

9009279 0003407 569

MG 1-12.39 Pull-up Torque of Single-speed Polyphase Squirrel-cage Integral-horsepower Motors with Continuous Ratings, Designs A, B and C

The pull-up torque of Design A and B, single-speed, polyphase squirrel-cage motors, with rated voltage and frequency applied, shall be not less than the following:

Column 1 Locked-rotor Torque from MG 1-12.37	Column 2 Pull-up Torque, Percent
110 percent or less	90 percent of Column 1
greater than 110 percent but less than 145 percent	100 percent of full-load torque
145 percent or more	70 percent of Column 1

The pull-up torque of Design C motors, with rated voltage and frequency applied, shall be not less than 70 percent of the locked-rotor torque from par. B of MG 1-12.37.

NEMA Standard 8-7-1947, revised 11-13-1958; 11-17-1966; 1-25-1972.

MG 1-12.40 Breakdown Torque of Polyphase Wound-rotor Integral-horsepower Motors with Continuous Ratings▲

The breakdown torques of 60- and 50-hertz, polyphase wound-rotor motors, with rated voltage and frequency applied, shall be not less than the following values which are expressed in percent of full-load torque.

	Breakdown Torque, Percent of Full-load Torque		
	Speed, Rpm		
Hp	1800	1200	900
1	...	...	250
1½	...	...	250
2	275	275	250
3	275	275	250
5	275	275	250
7½	275	250	225
10	275	250	225
15	250	225	225
20–200, incl.	225	225	225

NEMA Standard 6-24-1949, revised 9-20-1978.

▲ Revised.

Copyright National Electrical Manufacturers Association
Provided by IHS under license with NEMA
No reproduction or networking permitted without license from IHS

Not for Resale

9009279 0003408 4T5

MG 1-12.41 Temperature Rise for Fractional-horsepower and Universal Motors ▲

A. ALTERNATING-CURRENT FRACTIONAL-HORSEPOWER MOTORS—MOTOR NAMEPLATES MARKED WITH INSULATION SYSTEM DESIGNATION AND AMBIENT TEMPERATURE

The temperature rise, above the temperature of the cooling medium, for each of the various parts of the motor shall not exceed the values given in the following table when tested in accordance with the rating, except that for motors having a service factor greater than 1.0, the temperature rise shall not exceed the values given in the following table when tested at the service factor load.

CLASS OF INSULATION SYSTEM (SEE MG 1-1.65)	A	B	F	H
TIME RATING (may be continuous or any short-time rating given in MG 1-10.35)				
TEMPERATURE RISE (based on a maximum ambient temperature of 40°C), Degrees C				
1. WINDINGS				
a. Open motors other than those given in par. 1.b and 1.d—resistance or thermocouple	60	80	105	125
b. Open motors with 1.15 or higher service factor—resistance or thermocouple	70	90	115	...
c. Totally-enclosed nonventilated and fan-cooled motors, including variations thereof—resistance or thermocouple	65	85	110	135
d. Any motor in a frame smaller than the 42 frame—resistance or thermocouple	65	85	110	135
2. THE TEMPERATURES ATTAINED BY SQUIRREL-CAGE WINDINGS, CORES AND MECHANICAL PARTS (SUCH AS BRUSHHOLDERS, POLE TIPS, UNINSULATED SHADING COILS, COMMUTATORS, COLLECTOR RINGS, ETC.) SHALL NOT INJURE THE MACHINE IN ANY RESPECT.				

See notes at end of MG 1-12.41.C.

C. UNIVERSAL MOTORS ††

The temperature rise, above the temperature of the cooling medium, for each of the various parts of the motor, when tested in accordance with the rating, shall not exceed the values given in the following table:

CLASS OF INSULATION SYSTEM (SEE MG 1-1.65)	A	B	F	H
LOAD, PERCENT OF RATED CAPACITY	100	100	100	100
TIME RATING	**	**	**	**
**Time rating may be continuous or any short-time rating given in MG 1-10.35.				
TEMPERATURE RISE (METHOD OF TEMPERATURE DETERMINATION EMPLOYED AS INDICATED), DEGREES C.				
1. WINDINGS				
a. Open motors—thermocouple or resistance	60	80	105	125
b. Totally-enclosed nonventilated and fan-cooled motors, including variations thereof—thermocouple or resistance	65	85	110	135
2. COMMUTATORS (ANY MOTOR ENCLOSURE)—THERMOCOUPLE	65	85	110	135
3. MISCELLANEOUS PARTS (SUCH AS BRUSHHOLDERS, BRUSHES, POLE TIPS, ETC.) OTHER THAN THOSE WHOSE TEMPERATURES AFFECT THE TEMPERATURE OF THE INSULATING MATERIAL MAY ATTAIN SUCH TEMPERATURES AS WILL NOT BE INJURIOUS IN ANY OTHER RESPECT.				

(See following page for notes.)

▲ Revised.

Copyright National Electrical Manufacturers Association
Provided by IHS under license with NEMA
No reproduction or networking permitted without license from IHS
Not for Resale

9009279 0003409 331

Temperatures for MG 1-12.41.A and MG 1-12.41.C shall be determined in accordance with the latest revision of the following:

1. For single-phase motors—IEEE Std 114, *Test Procedure for Single-phase Induction Motors.*
2. For polyphase induction motors—IEEE Std 112, *Test Procedure for Polyphase Induction Motors and Generators.*

Where a Class F or H insulation system is used, special consideration needs to be given to bearing temperatures, lubrication, etc.

NOTE I—Abnormal deterioration of insulation may be expected if the ambient temperature of 40 °C is exceeded in regular operation. See Note II.*

▲ NOTE II—The temperature rises given in MG 1-12.41.A and item 1.a of MG 1-12.41.C are based upon a reference ambient temperature of 40 °C. Motors intended for use in any other ambient temperature should have temperature rises not exceeding the value calculated from the appropriate formula below, rounded off to the nearest 5 degrees:*

For motors given in items 1.a and 1.b of MG 1-12.41.A and item 1.a of MG 1-12.41.C—Temperature rise = 0.9 (Tc - Ta)

For motors given in items 1.c and 1.d of MG 1-12.41.A and items 1.b and 2 of MG 1-12.41.C —Temperature rise = 0.965 (Tc - Ta)

where

Ta = ambient temperature

Tc = for items 1.a, 1.c and 1.d of MG 1-12.41.A and all parts of MG 1-12.41.C =

105 °C for Class A insulation system
130 °C for Class B insulation system
155 °C for Class F insulation system
180 °C for Class H insulation system

for item 1.b of MG 1-12.41.A =

115 °C for Class A insulation system
140 °C for Class B insulation system
165 °C for Class F insulation system

When a higher ambient temperature than 40 °C is required, preferred values of ambient temperature are 50 °C, 65 °C, 90 °C and 115 °C.

NOTE III—The foregoing values of temperature rise are based upon operation at altitudes of 3300 feet (1000 meters) or less. For temperature rises for motors intended for operation at altitudes above 3300 feet (1000 meters), see MG 1-14.04.*

* Approved as Authorized Engineering Information.

†† Par. B rescinded 9-25-1975.

NEMA Standard 6-24-1949, revised 11-17-1949; 6-22-1950; 1-23-1951; 6-28-1951; 11-15-1951; 11-14-1957; 11-12-1959; 5-24-1960; 11-17-1960; 5-21-1962; 11-15-1962; 11-12-1964; 7-14-1971; 9-25-1975; 1-10-1978; 9-17-1981.

▲ Revised.

Copyright National Electrical Manufacturers Association
Provided by IHS under license with NEMA
No reproduction or networking permitted without license from IHS
Not for Resale

9009279 0003410 053

MG 1-12.42 Temperature Rise for Integral-horsepower Single-phase and Polyphase Induction Motors ▲

The temperature rise, above the temperature of the cooling medium, for each of the various parts of the motor shall not exceed the values given in the following table when tested in accordance with the rating, except that for motors having a service factor 1.15 or higher, the temperature rise shall not exceed the values given in the following table when tested at the service factor load.

CLASS OF INSULATION SYSTEM (SEE MG 1-1.65)	A	B	F*	H*‡
TIME RATING (may be continuous or any short-time rating given in MG 1-10.35)				
TEMPERATURE RISE (based on a maximum ambient temperature of 40°C), Degrees C				
1. WINDINGS				
a. Motors other than those given in par. 1.b, 1.c, 1.d and 1.e—resistance	60	80	105	125
b. All motors with 1.15 or higher service factor—resistance	70	90	115	...
c. Totally-enclosed fan-cooled motors, including variations thereof—resistance	60	80	105	125
d. Totally-enclosed nonventilated motors, including variations thereof—resistance	65	85	110	135
e. Motors with encapsulated windings and with 1.0 service factor, all enclosures—resistance	65	85	110	...

2. **The temperature attained by cores, squirrel-cage windings, and miscellaneous parts (such as brushholders, brushes, pole tips, uninsulated shading coils, commutators, collector rings, etc.) shall not injure the insulation or the machine in any respect.**

Temperatures shall be determined in accordance with the latest revision of the following:

1. For single-phase motors—IEEE Std 114, *Test Procedure for Single-phase Induction Motors.*

2. For polyphase induction motors—IEEE Std 112, *Test Procedure for Polyphase Induction Motors and Generators.*

* Where a Class F or H insulation system is used, special consideration needs to be given to bearing temperatures, lubrication, etc.
‡ This column applies to polyphase induction motors only.

Suggested Standard for Future Design 5-24-1960, revised 7-12-1961; 5-21-1962; 1-21-1964; 11-12-1964, reaffirmed 7-13-1967, NEMA Standard 7-14-1971.

NOTE I—Abnormal deterioration of insulation may be expected if the ambient temperature of 40°C is exceeded in regular operation. See Note II.
NOTE II—The temperature rises given in the above table are based upon a reference ambient temperature of 40°C. Motors intended for use in any other ambient temperature should have temperature rises not exceeding the value calculated from the appropriate formula below, rounded off to the nearest 5 degrees:
For motors given in items 1.a, 1.b and 1.c:

$$\text{Temperature rise} = 0.9\,(T_c - T_a)$$

For motors given in items 1.d and 1.e:

$$\text{Temperature rise} = 0.965(T_c - T_a)$$

where

T_a = ambient temperature
T_c = for all items except 1.b =
105°C for Class A insulation system
130°C for Class B insulation system
155°C for Class F insulation system
180°C for Class H insulation system
for item 1.b
115°C for Class A insulation system
140°C for Class B insulation system
165°C for Class F insulation system

When a higher ambient temperature than 40°C is required, preferred values of ambient temperature are 50°C, 65°C, 90°C and 115°C.

NOTE III—The foregoing values of temperature rise are based upon operation at altitudes of 3300 feet (1000 meters) or less. For temperature rises for motors intended for operation at altitudes above 3300 feet (1000 meters), see MG 1-14.04.

Authorized Engineering Information 7-12-1961, revised 5-21-1962; 1-21-1964; 8-19-1964; 11-12-1964; 7-14-1971; 11-12-1981.

▲ Revised.

Copyright National Electrical Manufacturers Association
Provided by IHS under license with NEMA
No reproduction or networking permitted without license from IHS
Not for Resale

9009279 0003411 T9T

MG 1-12.43 Varations from Rated Voltage and Rated Frequency

A. RUNNING

Alternating-current motors shall operate successfully under running conditions at rated load with a variation in the voltage or the frequency up to the following:

1. Plus or minus 10 percent of rated voltage, with rated frequency for induction motors.

2. Plus or minus 6 percent of rated voltage, with rated frequency for universal motors.

3. Plus or minus 5 percent of rated frequency, with rated voltage.

▲ 4. A combined variation in voltage and frequency of 10 percent (sum of absolute values) of the rated values, provided the frequency variation does not exceed plus or minus 5 percent of rated frequency, and the voltage variation of universal motors (except fan motors) does not exceed plus or minus 6 percent of rated voltage.

Performance within these voltage and frequency variations will not necessarily be in accordance with the standards established for operation at rated voltage and frequency.

B. STARTING

Integral horsepower motors shall start and accelerate to running speed a load which has a torque characteristic and an inertia value not exceeding that listed in MG 1-12.50 with the voltage and frequency variations specified in par. A.

NEMA Standard 7-24-1949, revised 11-17-1968; 7-12-1978; 5-15-1979.

The limiting values of voltage and frequency under which a motor will successfully start and accelerate to running speed depend on the margin between the speed-torque curve of the motor at rated voltage and frequency a d the speed-torque curve of the load under starting conditions. Since the torque developed by the motor at any speed is approximately proportional to the square of the voltage and inversely proportional to the square of the frequency, it is generally desirable to determine what voltage and frequency variations will actually occur at each installation, taking into account any voltage drop resulting from the starting current drawn by the motor. This information and the torque requirements of the driven machine define the motor-speed-torque curve, at rated voltage and frequency, which is adequate for the application.

Authorized Engineering Information 7-12-1978.

MG 1-12.44 Variation from Rated Frequency

See MG 1-12.43.

MG 1-12.45 Combined Variation of Voltage and Frequency

See MG 1-12.43

MG 1-12.45.a Voltage Unbalance

Alternating-current polyphase motors shall operate successfully under running conditions at rated load when the voltage unbalance at the motor terminals does not exceed 1 percent. Performance will not necessarily be the same as when the motor is operating with a balanced voltage at the motor terminals. (See MG 1-14.34.)

NEMA Standard 11-8-1973.

MG 1-12.46 Variation from Rated Speed

The variation from the nameplate or published data speed of alternating-current, single-phase and polyphase, integral-horsepower motors shall not exceed 20 percent of the difference between synchronous speed and rated speed when measured at rated voltage, frequency and load and with an ambient temperature of 25 °C.

NEMA Standard 6-24-1949, revised 6-22-1950; 1-23-1951; 11-12-1959.

MG 1-12.46.a Operation of Alternating-current Motors from Variable-frequency and/or Variable-voltage Power Supplies

Alternating-current motors to be operated from solid-state or other types of variable-frequency and/or variable-voltage power supplies for adjustable-speed-drive applications may require individual consideration to provide satisfactory performance. Especially for operation below rated speed, it may be necessary to reduce the motor torque load below the rated full-load torque to avoid overheating the motors. The motor manufacturer should be consulted before selecting a motor for such applications.

Authorized Engineering Information 7-12-1978.

▲Editorially revised.

Copyright National Electrical Manufacturers Association
Provided by IHS under license with NEMA
No reproduction or networking permitted without license from IHS
Not for Resale

9009279 0003412 926

MG 1-12.47 Service Factor of Alternating-current Motors▲

A. General-Purpose Alternating-Current Motors

A general-purpose alternating-current motor is an open-type motor. (See MG 1-1.05.)

When operated at rated voltage and frequency, general-purpose alternating-current motors having a rated temperature rise in accordance with MG 1-12.41 for fractional-horsepower motors or MG 1-12.42 for integral-horsepower motors shall have a service factor in accordance with the following (see MG 1-14.35):

	Service Factor							
	Synchronous Speed, Rpm							
Hp	3600	1800	1200	900	720	600	514	
1/20	1.4	1.4	1.4	1.4	...	...	...	
1/12	1.4	1.4	1.4	1.4	...	...	...	Fractional-horsepower Motors
1/8	1.4	1.4	1.4	1.4	...	...	...	
1/6	1.35	1.35	1.35	1.35	...	...	...	
1/4	1.35	1.35	1.35	1.35	...	...	...	
1/3	1.35	1.35	1.35	1.35	...	...	...	
1/2	1.25	1.25	1.25	1.15*	...	...	...	
3/4	1.25	1.25	1.15*	1.15*	...	...	...	Integral-horsepower Motors
1	1.25	1.15*	1.15*	1.15*	...	...	...	
1 1/2–125	1.15*	1.15*	1.15*	1.15*	1.15*	1.15*	1.15*	
150	1.15*	1.15*	1.15*	1.15*	1.15*	1.15*	...	
200	1.15*	1.15*	1.15*	1.15*	1.15*	...	...	

*In the case of polyphase squirrel-cage integral-horsepower motors, these service factors apply only to Design A, B and C motors.

B. Other Motors

When operated at rated voltage and frequency, other open-type and all totally enclosed alternating-current motors having a rated temperature rise in accordance with MG 1-12.42 shall have a service factor of 1.0.

Suggested Standard for Future Design 11-12-1964; revised 8-20-1966, NEMA Standard 11-12-1970, revised 3-19-1980.

In those applications requiring an overload capacity, the use of a higher horsepower rating, as given in par. D of MG 1-10.32, is recommended to avoid exceeding the temperature rises for the class of insulation system used and to provide adequate torque capacity.

Authorized Engineering Information 8-20-1966.

▲ Revised.

Copyright National Electrical Manufacturers Association
Provided by IHS under license with NEMA
No reproduction or networking permitted without license from IHS
Not for Resale

9009279 0003413 862

MG 1-12.48 Overspeeds for Motors

A. Squirrel-cage and Wound-rotor Motors

Squirrel-cage and wound-rotor induction motors, except crane motors, shall be so constructed that, in an emergency of short duration, they will withstand without mechanical injury overspeeds above synchronous speed in accordance with the following:

Hp	Synchronous Speed, Rpm	Overspeed, Percent of Synchronous Speed
200 and smaller	1801 and over	25
	1201 to 1800	25
	1200 and below	50
250–500, incl.	1801 and over	20
	1800 and below	25

B. Alternating-current Series and Universal Motors

Alternating-current series and universal motors shall be capable of withstanding, in an emergency of short duration, a speed which is 10 percent above the no-load speed at rated voltage.

NOTE—For motors which are integrally attached to loads that cannot become accidentally disconnected, the words "no-load speed" shall be interpreted to mean the lightest load condition possible with the load.

NEMA Standard 11-1-1946; revised 11-13-1952; 11-17-1955; 8-20-1966; 11-13-1969.

MG 1-12.49 Machine Noise (Integral-horsepower Induction Motors)

A. Sound Quality

Sound quality is determined by the distribution of effective sound intensities as a function of frequency. It plays a significant role in determining how acceptable the sound is to the human ear.

Although the overall A-weighted sound does not completely define sound acceptability because machines with the same overall decibel sound level may have a different sound quality, it does provide a quantitative measure of loudness and hearing damage potential. It may be necessary, in some cases, to describe the sound profile in more detail. In such cases, the manufacturer should be consulted.

B. Sound Measurement

Machine sound should be measured in accordance with IEEE Std 85, *Test Procedure for Airborne Sound Measurements on Rotating Electric Machinery.*

Motor sound tests should be taken at no load so that the motor sound can be isolated from other sound sources.

It should be recognized that decibel readings are not exact and are subject to many external influences. For further information see the NEMA Standards Publication for *Sound Level Prediction for Installed Rotating Electrical Machines,* MG 3.

C. Sound Power Levels of Polyphase Squirrel-cage Induction Motors ▲

The no-load sound power levels of Design A, B and C polyphase squirrel-cage induction motors generally do not exceed the values given in the table below when measured in accordance with IEEE Std 85:

Frame Designation	Synchronous Speed, Rpm	Overall Sound Power Level, Decibels, A-Weighted (Reference = 10^{-12} Watts)	
		Drip-proof	Totally-enclosed Fan-cooled
143T, 145T	3600	76	87
182T, 184T	3600	80	91
213T, 215T	3600	82	94
254T, 256T	3600	84	96
284T, 286T	3600	86	98
324T, 326T	3600	89	100
364T, 365T	3600	94	101
404T, 405T	3600	98	102
444T, 445T	3600	101	104
143T, 145T	1800	70	70
182T, 184T	1800	72	74
213T, 215T	1800	76	79
254T, 256T	1800	80	84
284T, 286T	1800	80	88
324T, 326T	1800	84	92
364T, 365T	1800	86	95
404T, 405T	1800	89	98
444T, 445T	1800	93	102
143T, 145T	1200	65	64
182T, 184T	1200	67	67
213T, 215T	1200	72	71
254T, 256T	1200	76	75
284T, 286T	1200	81	80
324T, 326T	1200	83	83
364T, 365T	1200	86	87
404T, 405T	1200	88	91
444T, 445T	1200	91	96
143T, 145T	900	67	67
182T, 184T	900	69	69
213T, 215T	900	70	72
254T, 256T	900	73	76
284T, 286T	900	76	80
324T, 326T	900	79	83
364T, 365T	900	81	86
404T, 405T	900	84	89
444T, 445T	900	87	93

For motors built in frames larger than 445T, see MG 1-20.49.

Authorized Engineering Information 6-28-1951, revised 5-21-1962; 11-13-1969; 1-17-1974; 5-17-1976; 11-12-1981.

▲ Revised.

Copyright National Electrical Manufacturers Association
Provided by IHS under license with NEMA
No reproduction or networking permitted without license from IHS
Not for Resale

9009279 0003414 7T9

MG 1-12.50 Number of Starts ▲

A. Squirrel-cage induction motors having horsepower ratings given in par. D of MG 1-10.32 with performance characteristics in accordance with Part 12* shall be capable of accelerating without injurious heating load Wk^2 referred to the motor shaft, equal to or less than the values listed in the following table under these conditions:

1. Applied voltage and frequency in accordance with MG 1-12.43.
2. During the accelerating period, the connected load torque is equal to or less than a torque which varies as the square of the speed and is equal to 100 percent of rated load torque at rated speed.

*Locked-rotor torque in accordance with par. A of MG 1-12.37, breakdown torque in accordance with par. A of MG 1-12.38, Class A or B insulation system with temperature rise in accordance with MG 1-12.42, and service factor in accordance with par. B of MG 1-12.47.

3. Two starts in succession (coasting to rest between starts) with the motor initially at the ambient temperature or one start with the motor initially at a temperature not exceedig its rated load operating temperature.

B. If the starting conditions are other than those stated in par. A, the motor manufacturer should be consulted.

C. When additional starts are required, it is recommended that none be made until all conditions affecting operation have been thoroughly investigated and the apparatus examined for evidence of excessive heating. It should be recognized that the number of starts should be kept to a minimum since the life of the motor is affected by the number of starts.

Authorized Engineering Information 8-20-1960; revised 9-7-1977.

	Speed, Rpm						
	3600	1800	1200	900	720	600	514
Hp	Load Wk^2 (Exclusive of Motor Wk^2), Lb-Ft²						
1	...	5.8	15	31	53	82	118
1½	1.8	8.6	23	45	77	120	174
2	2.4	11	30	60	102	158	228
3	3.5	17	44	87	149	231	335
5	5.7	27	71	142	242	375	544
7½	8.3	39	104	208	356	551	798
10	11	51	137	273	467	723	1048
15	16	75	200	400	685	1061	1538
20	21	99	262	525	898	1393	2018
25	26	122	324	647	1108	1719	2491
30	31	144	384	769	1316	2042	2959
40	40	189	503	1007	1725	2677	3881
50	49	232	620	1241	2127	3302	4788
60	58	275	735	1473	2524	3819	5680
75	71	338	904	1814	3111	4831	7010
100	92	441	1181	2372	4070	6320	9180
125	113	542	1452	2919	5010	7790	11310
150	133	640	1719	3456	5940	9230	...
200	172	831	2238	4508	7750	...	...
250	210	1017	2744	5540	...	...	...
300	246	1197	3239	...	...	...	...
350	281	1373	3723	...	...	...	...
400	315	1546	...	...	...	...	...
450	349	1714	...	...	...	...	...
500	381	1880	...	...	...	...	...

NEMA Standard 8-20-1966; revised 9-7-1977.

▲ Editorially revised.

Copyright National Electrical Manufacturers Association
Provided by IHS under license with NEMA
No reproduction or networking permitted without license from IHS
Not for Resale

9009279 0003415 635

MG 1-12.51 Routine Tests for Polyphase Integral-horsepower Induction Motors ▲

Typical tests which may be made on polyphase integral-horsepower induction motors are listed below. All tests should be made in accordance with IEEE Std 112, *Test Procedure for Polyphase Induction Motors and Generators.*

1. No-load readings of current and speed at normal voltage and frequency. On 50-hertz motors, these readings may be taken at 60 hertz. On motors furnished without complete shaft and bearings, this test will not be taken.

2. Current input at rated frequency with rotor at standstill for squirrel-cage motors. This may be taken single-phase or polyphase at rated or reduced voltage. (When this test is made single-phase, the polyphase values of a duplicate machine should be given in any report.)
On 50-hertz motors, these readings may be taken at 60 hertz.
On motors furnished without complete shaft and bearings, this test may be taken on stator only, rotor omitted.

3. Measurement of open-circuit voltage ratio on wound-rotor motors.

4. High-potential test in accordance with MG 1-3.01 and MG 1-12.03.

Recommended Standard 6-24-1949, revised 11-17-1949, NEMA Standard 11-12-1953, revised 7-21-1954; 11-12-1959, Authorized Engineering Information 8-19-1964, revised 1-17-1974; 11-16-1978.

MG 1-12.52 Thermal Protection of Integral-horsepower Motors

The protector in a thermally protected motor shall limit the winding temperature and the ultimate trip current as follows:

A. Winding Temperature

1. Running Load—When a motor marked "Thermally Protected" is running at the maximum continuous load which it can carry without causing the protector to open the circuit, the temperature of the windings shall not exceed the following:

Insulation System Class	Temperature, Degrees C*
A	140
B	165
F	190
H	215

* The temperature values are based on an assumed ambient temperature of 25°C.

Tests may be conducted at any ambient temperature within the range of 10°C to 40°C.

The temperature of the windings shall be measured by the resistance method except that, for motors rated 15 horsepower and smaller, the temperature may alternatively be measured by the thermocouple method.

Short-time rated motors and motors for intermittent duty may be run at no load and reduced voltage, if necessary, for a continuous running test to verify that the protector limits the temperatures to those given in the foregoing table.

2. Locked Rotor—When a motor marked "Thermally Protected" is under locked-rotor conditions, the thermal protector shall cycle to limit the winding temperature to the values given in Table 12-2.

The test for motors with automatic-reset thermal protectors shall be run until temperature peaks are constant or for 72 hours, whichever is shorter.

The test for motors with manual-reset thermal protectors shall be 10 cycles, the protector being reclosed as quickly as possible after it opens. If ten cycles are completed in less than 1 hour, only the "during first hour" limits given in Table 12-2 apply.

B. Trip Current

A motor rated more than 1 horsepower and marked "Thermally Protected" shall have an ultimate trip current, based on a 40°C ambient temperature, not in excess of the following percentages of motor full-load currents given in Tables 430-148, 430-149 and 430-150 of the *National Electrical Code:*

Motor Full-load Amperes	Percent of Motor Full-load Current Given in NEC Tables
9.0 and less	170
Over 9.0 but not over 20.0	156
Over 20.0	140

Dual-voltage motors shall comply with the ultimate trip current requirements for both voltages.

For a motor rated at an intermediate value of horsepower between the values given in the aforementioned tables, the full-load current shall be calculated by interpolation from the immediately adjacent data.

NEMA Standard 9-21-1966, revised 7-17-1968; 1-25-1972; 5-14-1973.

Copyright National Electrical Manufacturers Association
Provided by IHS under license with NEMA
No reproduction or networking permitted without license from IHS
Not for Resale

MG 1-12.53 Overtemperature Protection of Integral-horsepower Motors Not Meeting the Definition of "Thermally Protected"

When motors rated above 1 horsepower are provided with winding overtemperature protection devices or systems not meeting the definition of "Thermally Protected" (see MG 1-12.52), they shall be marked as follows:

OVER TEMP PROT——

When motors are so marked, the number 1, 2 or 3 shall be stamped in the blank space following the words "OVER TEMP PROT" to indicate the type of winding overtemperature protection provided. For each type, the winding overtemperature protector shall limit the temperature of the windings as follows:

A. TYPE 1—WINDING RUNNING AND LOCKED-ROTOR OVERTEMPERATURE PROTECTION

1. Winding Running Temperature—When the motor is marked "OVER TEMP PROT 1" and is running at the maximum continuous load which it can carry without causing the winding overtemperature protector to operate, the temperature of the windings shall not exceed the following:

TABLE 12-3

Insulation System Class	Maximum Winding Temperature, Degrees C*
A	140
B	165
F	190
H	215

* The temperature values are based on an assumed ambient temperature of 25°C.

The temperature of the windings shall be measured by the resistance method except that, for motors rated 15 horsepower and smaller, the temperature may alternatively be measured by the thermocouple method.

2. Winding Locked-rotor Temperature—In addition, when the motor is marked "OVER TEMP PROT 1" and is under locked-rotor conditions, the winding overtemperature protector shall limit the temperature of the windings to the values shown in Table 12-2.

B. TYPE 2—WINDING RUNNING OVERTEMPERATURE PROTECTION

When the motor is marked "OVER TEMP PROT 2" and is running at the maximum continuous load which it can carry without causing the winding overtemperature protector to operate, the temperature of the windings shall not exceed the temperature shown in Table 12-3.

When the motor is so marked, locked-rotor protection is not provided by the winding overtemperature protector.

C. TYPE 3—WINDING OVERTEMPERATURE PROTECTION, NONSPECIFIC TYPE

When the motor is marked "OVER TEMP PROT 3," the motor manufacturer should be consulted for details of protected conditions and/or winding temperatures.

NEMA Standard 5-17-1972, revised 5-14-1973.

MG 1-12.53.a Efficiency ▲

Efficiency and losses shall be determined in accordance with the latest revision of IEEE Std 112. The efficiency shall be determined at rated output, voltage, and frequency.

Unless otherwise specified, horizontal, polyphase, squirrel-cage integral-horsepower motors rated 1 to 125 horsepower shall be tested by dynamometer (Method B), in accordance with steps 1 through 4 below. Vertical motors in this horsepower range shall also be tested by Method B and steps 1 through 4 below if bearing construction permits. Polyphase, squirrel-cage integral horsepower motors larger than 125 horsepower shall be tested by dynamometer (Method B) in accordance with steps 1 through 4 below, or by segregated losses (Method E) including direct measurement of stray-load loss.

Steps 1 through 4 below are a specific means of maximizing the accuracy of the test procedure which is generally described in the footnote to par. 4.2.2.4 of IEEE Std 112. The method requires that data be taken for at least six approximately equally spaced motoring load points between 25 and 150 percent of rated load. Operation of the machine as a generator in accordance with the footnote to par. 4.2.2.4 of IEEE Std 112

TABLE 12-2
WINDING TEMPERATURE UNDER LOCKED-ROTOR CONDITIONS, DEGREES C

Type of Protector	Maximum Temperature, Degrees C*				Average Temperature,† Degrees C*			
	Insulation System Class				Insulation System Class			
	A	B	F	H	A	B	F	H
Automatic reset								
During first hour	200	225	250	275	...	...	...	...
After first hour	175	200	225	250	150	175	200	225
Manual reset								
During first hour	200	225	250	275	...	...	...	...
After first hour	175	200	225	250	...	...	...	...

The temperature of the windings shall be measured by the resistance method except that, for motors rated 15 horsepower and smaller, the temperature may alternatively be measured by the thermocouple method.

* The temperature values are based on an assumed ambient temperature of 25°C. Tests may be conducted at any ambient temperature within the range of 10°C to 40°C.
† The average temperature is the average of the average peak and average reset winding temperatures. The average temperature shall be within limits during both the second and last hour of the test.

▲ Revised.

Copyright National Electrical Manufacturers Association
Provided by IHS under license with NEMA
No reproduction or networking permitted without license from IHS
Not for Resale

is not required. All data is taken with the machine operating as a motor. A linear regression analysis is used to reduce the effect of random errors in the test measurements and the smoothed data is used to calculate the final value of efficiency.

1. Determine motor efficiency using the dynamometer method as described in IEEE Std 112, par. 4.2.2.4.
2. Segregate losses—The stray-load loss shall be separately calculated for each load point by subtracting from the total losses the stator I^2R loss at the temperature of the test, the core loss, friction and windage loss, and the rotor I^2R loss corresponding to the measured value of slip. The stray-load losses shall be calculated for six approximately equally spaced load points between 25 and 150 percent of rated load.
3. Smooth the stray-load loss data by using a linear regression analysis:

$$W_{LL} = AT^2 + B$$

Where W_{LL} = Stray load loss
T = Torque
A = Slope
B = Intercept

If the correlation factor r is less than 0.9, delete the worst point and recalculate A and B. If this increases r to greater than 0.9, use the second calculation; if not, the test is unsatisfactory and errors in the instrumentation or test readings, or both, are indicated. The source of the error shall be investigated, corrected, and the test repeated. The smoothed and corrected value of stray-load loss is:

$$W_{LLc} = AT^2$$

4. Calculate motor efficiency using Form MG 1-12.55 which includes temperature correction. Use W_{LLc} appropriate to the load point.

The following losses shall be included in determining the efficiency:

1. Stator I^2R.
2. Rotor I^2R.
3. Core loss.
4. Stray load loss.
5. Friction and windage loss.*
6. Brush contact loss of wound-rotor machines.

Power required for auxiliary items, such as external pumps or fans, that are necessary for the operation of the motor shall be stated separately.

In determining I^2R losses, the resistance of each winding shall be corrected to a temperature equal to an ambient temperature of 25°C plus the observed rated load temperature rise measured by resistance. When the rated load temperature rise has not been measured, the resistance of the winding shall be corrected to the following temperature:

▲ Revised.

Class of Insulation System	Temperature, Degrees C
A	75
B	95
F	115
H	130

This reference temperature shall be used for determining I^2R losses at all loads. If the rated temperature rise is specified as that of a lower class of insulation system, the temperature for resistance correction shall be that of the lower insulation class.

* In the case of motors which are furnished with thrust bearings, only that portion of the thrust bearing loss produced by the motor itself shall be included in the efficiency calculation. Alternatively, a calculated value of efficiency, including bearing loss due to external thrust load, may be specified.
In the case of motors which are furnished with less than a full set of bearings, friction and windage losses which are representative of the actual installation shall be determined by (1) calculation or (2) experience with shop test bearings and shall be included in the efficiency calculations.

NEMA Standard 5-12-1975, revised 6-21-1979; 11-12-1981.

MG 1-12.53.b Efficiency of Polyphase Squirrel-cage Integral-horsepower Motors with Continuous Ratings

The full-load efficiency of Designs A and B, single-speed, polyphase squirrel-cage integral-horsepower motors in the range of 1 through 125 horsepower for frames assigned in accordance with NEMA Publication for *Frame Assignments for AC Integral-horsepower Induction Motors,* No. MG 13, and equivalent Design C ratings, shall be identified on the nameplate by a nominal efficiency selected from the nominal efficiency column in Table 12-4 which shall not be greater than the average efficiency of a large population of motors of the same design. The full-load efficiency when operating at rated voltage and frequency shall not be less than the minimum value associated with the nominal value in Table 12-4.

The efficiency shall be identified on the nameplate by the caption "NEMA Nominal Efficiency" or "NEMA Nom. Eff."

Table 12-4 ▲

Nominal Efficiency	Minimum Efficiency	Nominal Efficiency	Minimum Efficiency
98.0	97.6	87.5	85.5
97.8	97.4	86.5	84.0
97.6	97.1	85.5	82.5
97.4	96.8	84.0	81.5
97.1	96.5	82.5	80.0
96.8	96.2	81.5	78.5
96.5	95.8	80.0	77.0
96.2	95.4	78.5	75.5
95.8	95.0	77.0	74.0
95.4	94.5	75.5	72.0
95.0	94.1	74.0	70.0
94.5	93.6	72.0	68.0
94.1	93.0	70.0	66.0
93.6	92.4	68.0	64.0
93.0	91.7	66.0	62.0
92.4	91.0	64.0	59.5
91.7	90.2	62.0	57.5
91.0	89.5	59.5	55.0
90.2	88.5	57.5	52.5
89.5	87.5	55.0	50.5
88.5	86.5	52.5	48.0
		50.5	46.0

Suggested Standard for Future Design 3-16-1977; NEMA Standard 1-17-1980, revised 3-8-1983.

Copyright National Electrical Manufacturers Association
Provided by IHS under license with NEMA
No reproduction or networking permitted without license from IHS

Not for Resale

9009279 0003418 344

Variations in materials, manufacturing processes, and tests result in motor-to-motor efficiency variations for a given motor design; the full-load efficiency for a large population of motors of a single design is not a unique efficiency but rather a band of efficiency. Therefore, Table 12-4 has been established to indicate a logical series of nominal motor efficiencies and the minimum associated with each nominal. The nominal efficiency represents a value which should be used to compute the energy consumption of a motor or group of motors.

Authorized Engineering Information 3-16-1977, revised 1-17-1980.

MG 1-12.54 Report of Test Form for Tests on Induction Motors ▲

For reporting routine tests on induction motors, see IEEE Standard 112-1978, Form A-1.

For reporting performance tests on induction motors, see IEEE Standard 112-1978, Form A-2.

Recommended Standard 6-4-1948, revised 6-24-1949, NEMA Standard 11-12-1953, revised 11-12-1970; 3-19-1980; 11-12-1981.

▲ Revised.

Copyright National Electrical Manufacturers Association
Provided by IHS under license with NEMA
No reproduction or networking permitted without license from IHS

Not for Resale

MG 1-12.55 Calculation Form For Input-Output Test Of Induction Machine With Segregation Of Losses And Smoothing Of Stray-Load Loss

Type _____ Design _____ Frame _____ Hp _____ Phase _____
Frequency _____ Volts _____ Synchronous r/min _____ Serial No. _____
Degrees C Temperature Rise _____ Time Rating _____ Model No. _____

Stator Winding resistance Between Terminals _____ Ohms @ _____ °C

Specified Temperature For Resistance Correction (ts) = (See MG 1-12.53.a)

Item	Description	1	2	3	4	5	6
1	Ambient Temperature, °C						
2	(t_t) Stator Winding Temperature, °C						
3	Slip, r/min						
4	Speed, r/min						
5	Line Voltage, volts						
6	Line Current, amperes						
7	Power Input, watts						
8	Core Loss, watts						
9	Stator I^2R Loss, watts, at (t_t) °C						
10	Power Input to Rotor, watts						
11	Rotor I^2R Loss, watts						
12	Friction and Windage Loss, watts						
13	Total Conventional Loss, watts						
14	Torque,_____*						
15	Dynamometer Correction_____*						
16	Corrected Torque_____*						
17	Power Output, watts						
18	Apparent Total Loss, watts						
19	Stray-Load Loss, watts						
Intercept_____ Slope_____ Corr. Factor_____ Point Deleted_____							
20	Stator I^2R Loss, watts, at (t_s) °C						
21	Corrected Power Input to Rotor, watts						
22	Corrected Slip, r/min						
23	Corrected Speed, r/min						
24	Rotor I^2R Loss, watts, at (t_s) °C						
25	Corrected Stray-Load Loss, watts						
26	Corrected Total Loss, watts						
27	Corrected Power Output, watts						
28	Power Output, hp						
29	Efficiency, percent						
30	Power Factor, percent						

t_t = Temperature of stator winding as determined from stator resistance or temperature detector during test.
* Indicate Torque Units as N·m or lb·ft.

Copyright National Electrical Manufacturers Association
Provided by IHS under license with NEMA
No reproduction or networking permitted without license from IHS
Not for Resale

(4) Is equal to synchronous speed - (3)
(10) Is equal to (7) − (8) − (9)
(11) Is equal to $\frac{(10) \times (3)}{\text{Syn. r/min}}$
(13) Is equal to (8) + (9) + (11) + (12)
(15) "Corrects" for windage and bearing loss torque of dynamometer and is equal to

$$\frac{k(W_A - W_B)}{n} - C$$

Where:

$W_A = (P_1 - W_1 - W_h) \times (1 - S_1)$
$W_B = P_o - W_o - W_h$
P_1 = input power in watts required to drive machine when coupled to dynamometer with dynamometer armature circuit open (Test A)
W_1 = stator I^2R loss in watts during Test "A"
S_1 = slip in per unit during Test "A"
P_o = input power in watts required to drive machine running free and uncoupled (Test B)
W_o = stator I^2R loss in watts during Test "B"
W_h = core loss in watts
C = torque output registered by dynamometer during Test "A"
k = 9.549 for T in N·m
k = 7.043 for T in lb·ft
n = rotational speed in r/min during Test "A"

(16) Is equal to observed torque (14) plus correction (15)
(17) Is equal to $\frac{(16) \times (4)}{k}$
(18) Is equal to (7) − (17)
(19) Is equal to (18) − (13)
(21) Is equal to (7) − (8) − (20)
(22) See IEEE 112, 4.4.1
(23) Is equal to synchronous speed − (22)
(24) Is equal to $\frac{(21) \times (22)}{\text{Syn. r/min}}$
(25) Is equal to AT^2

Copyright National Electrical Manufacturers Association
Provided by IHS under license with NEMA
No reproduction or networking permitted without license from IHS
Not for Resale

Where:

A = Slope of the curve of (19) vs. $(16)^2$ using a linear regression analysis. See MG 1-12.53.a, Step 3

T = corrected torque squared = $(16)^2$

(26) Is equal to (8) + (12) + (20) + (24) + (25)

(27) Is equal to (7) − (26)

(28) Is equal to $\frac{(27)}{746}$

(29) Is equal to $\frac{(27)}{(7)} \times 100$

(30) Is equal to $\frac{(27)}{m \times (5) \times (6) \times (29)}$

Where:

$m = \sqrt{3}$ for 3 phase

$m = \sqrt{2}$ for 2 phase

Summary of characteristics obtained by plotting line current (6), speed (23), and efficiency (29) vs. output hp (28), then curve fitting to set these values at precise hp load points. Power factor is computed for each precise load point from its amperes and input watts, where input watts equal:

$$\frac{hp \times 746 \times 100}{\text{efficiency, percent}}$$

Copyright National Electrical Manufacturers Association
Provided by IHS under license with NEMA
No reproduction or networking permitted without license from IHS
Not for Resale

9009279 0003422 875

SECTION II

FRACTIONAL- AND INTEGRAL-HORSEPOWER MACHINES

Part 12. Tests and Performance — DC Motors

The standards in this Part 12 of Section II cover direct-current motors built in frames with continuous dripproof ratings, or equivalent capacities, up to and including 1.25 horsepower per rpm, open type.

Copyright National Electrical Manufacturers Association
Provided by IHS under license with NEMA
No reproduction or networking permitted without license from IHS
Not for Resale

9009279 0003423 701

Part 12

TESTS AND PERFORMANCE
DC FRACTIONAL- AND INTEGRAL-HORSEPOWER MOTORS

MG 1-12.60 Test Methods

Tests to determine performance characteristics shall be made in accordance with IEEE Std 113, *Test Code for Direct-current Machines.*

NEMA Standard 11-12-1964.

MG 1-12.61 Test Power Supply

A. FRACTIONAL-HORSEPOWER MOTORS

Performance tests on direct-current fractional-horsepower motors intended for use on adjustable-voltage rectifier power supplies shall be made with an adjustable power supply, derived from a 60-hertz source, that will provide rated voltage and rated form factor at rated load.

B. INTEGRAL-HORSEPOWER MOTORS (SEE FIG. 12-1)▲

1. Low-ripple Power Supplies—Power Supply A—The rating of direct-current motors intended for use on low-ripple power supplies shall be based on the use of one of the following test power supplies:

   a. Direct-current generator.
   b. Battery.
   c. A polyphase rectifier power supply having more than six pulses per cycle and 15 percent or less phase control.
   d. Any of the power supplies listed in par. B.2 provided sufficient series inductance is used to obtain 6 percent peak-to-peak, or less, armature current ripple.

2. Other Rectifier Power Supplies—The rating of direct-current motors intended for use on rectifier power supplies other than those described in par. B.1 shall be based on the use of a test power supply having the characteristics given in par. B.3 and defined in par. B.4.

3. Power Supply Characteristics—

   a. Input
      (1) Single phase or three phase, as specified.
      (2) Specified frequency. Unless otherwise specified, the frequency shall be 60 hertz.
      (3) Specified alternating-current voltage, plus 2 percent, minus 0 percent.
      (4) Power source shall not introduce significant series impedance.

   b. Output
      (1) Rated direct-current motor voltages.
      (2) Adequate direct current for all required tests.
      (3) The difference between the highest and lowest peak amplitudes of the current pulses over one cycle shall not exceed 2 percent of the highest pulse amplitude.

4. Supplies Designated by a Single Letter—A test power supply designated by a single letter shall have all of the characteristics listed in par. B.3 and, in addition, the following:

   a. Power Supply C—Power supply identification letter "C" designates a three-phase full-wave power supply having six total pulses per cycle and six controlled pulses per cycle, without free wheeling, with 60-hertz input, with no series inductance being added externally to the motor armature circuit inductance. The input line-to-line alternating-current voltage to the rectifier shall be 230 volts for motor ratings given in Table 10-4 of MG 1-10.62 and 460 volts for motor ratings given in Table 10-5 of MG 1-10.62.
   b. Power Supply D—Power supply identification letter "D" designates a three-phase semibridge having three controlled pulses per cycle with free wheeling, with 60-hertz input, with no series inductance being added externally to the motor armature circuit inductance. The input line-to-line alternating-current voltage to the rectifier shall be 230 volts for motor ratings given in Table 10-4 of MG 1-10.62 and 460 volts for motor ratings given in Table 10-5 of MG 1-10.62.
   c. Power Supply E—Power supply identification letter "E" designates a three-phase single-way power supply having three total pulses per cycle and three controlled pulses per cycle, without free wheeling, with 60-hertz input, and with no series inductance being added externally to the motor armature circuit inductance. The input line-to-line alternating-current voltage to the rectifier shall be 460 volts for motor ratings given in Table 10-4 of MG 1-10.62.
   d. Power Supply K—Power supply identification letter "K" designates a single-phase full-wave power supply having

▲ Revised.

Copyright National Electrical Manufacturers Association
Provided by IHS under license with NEMA
No reproduction or networking permitted without license from IHS
Not for Resale

9009279 0003424 648

two total pulses per cycle and two controlled pulses per cycle, with free wheeling, with 60-hertz input, with no series inductance being added externally to the motor armature circuit inductance. The input alternating-current voltage to the rectifier shall be 230 volts for motors with armature voltage ratings of 180 volts in Table 10-3 of MG 1-10.62, and 115 volts for motors with armature voltage ratings of 90 volts

Authorized Engineering Information 1-25-1972, revised 11-8-1973; 5-12-1975, NEMA Standard 9-20-1978.

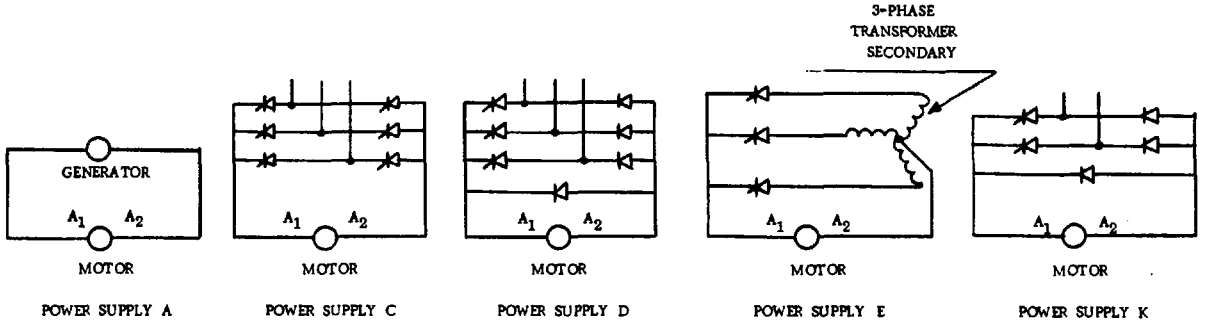

Fig. 12–1

Test Power Supplies

MG 1-12.62 Temperature Rise

The temperature rise, above the temperature of the cooling medium, for each of the various parts of the motor when tested in accordance with the rating at base speed, shall not exceed the values given in the following tables:

A. Direct-current Fractional-horsepower Motors

	All Enclosures		
Class of Insulation System (See MG 1-1.65)	A	B	F
Time Rating		Continuous	
Temperature Rise, Degrees C			
1. Armature windings and all other windings other than those given in par. 2—Resistance	70	100	130
2. Shunt field windings—Resistance	70	100	130
3. Commutator and collector rings—Thermometer	65	85	105
4. Miscellaneous parts (such as brushholders, brushes, pole tips, etc.) other than those whose temperatures affect the temperature of the insulating material may attain such temperatures as will not be injurious in any respect.			

NOTE I—Temperatures measured by either the thermometer or resistance method shall be determined in accordance with the latest revision of IEEE Std 113, *Test Code for Direct-current Machines.*

Suggested Standard for Future Design 7-7-1965, reaffirmed 11-21-1968, NEMA Standard 11-12-1970.

NOTE II—Abnormal deterioration of insulation may be expected if the ambient temperature of 40°C is exceeded in regular operation. See Note III.

NOTE III—When the rated maximum ambient temperature is other than 40°C, the rated value shall be 25°C, 50°C or 65°C. The maximum temperature rise values for each machine part and for either method of measurement shall be the value selected from the appropriate table with an adjustment as follows:

Rated Maximum Ambient Temperature, Degrees C	Adjustment to Temperature Rise Values, Degrees C
25	Add 15
50	Subtract 10
65	Subtract 25

Authorized Engineering Information 7-7-1965, revised 5-17-1972.

Copyright National Electrical Manufacturers Association
Provided by IHS under license with NEMA
No reproduction or networking permitted without license from IHS
Not for Resale

Copyright National Electrical Manufacturers Association
Provided by IHS under license with NEMA
No reproduction or networking permitted without license from IHS

9009279 0003425 584

B. CONTINUOUS-TIME-RATED DIRECT-CURRENT INTEGRAL-HORSEPOWER MOTORS ▲

	Totally-enclosed Nonventilated and Totally-enclosed Fan-cooled Motors, Including Variations Thereof				Motors with All Other Enclosures			
CLASS OF INSULATION SYSTEM (See MG 1-1.65)	A	B	F	H	A	B	F	H
TIME RATING	Continuous				Continuous			
TEMPERATURE RISE, DEGREES C								
1. ARMATURE WINDINGS AND ALL OTHER WINDINGS OTHER THAN THOSE GIVEN IN PAR. 2 AND 3								
Resistance	70	100	130	155	70	100	130	155
2. MULTI-LAYER FIELD WINDINGS								
Resistance	70	100	130	155	70	100	130	155
3. SINGLE-LAYER FIELD WINDINGS WITH EXPOSED UNINSULATED SURFACES AND BARE COPPER WINDINGS								
Resistance	70	100	130	155	70	100	130	155
4. The temperature attained by cores, commutators, and miscellaneous parts (such as brushholders, brushes, pole tips, etc.) shall not injure the insulation or the machine in any respect.								

NOTE I—All temperature rises are based on a maximum ambient temperature of 40°C. Abnormal deterioration of insulation may be expected if this ambient temperature is exceeded in regular operation See Note II.

NOTE II—When the rated maximum ambient temperature is other than 40°C, the rated value shall be 25°C, 50°C or 65°C. The maximum temperature rise values for each machine part shall be the value selected from the appropriate table with an adjustment as follows:

Rated Maximum Ambient Temperature, Degrees C	Adjustment to Temperature Rise Value, Degrees C
25	Add 15
50	Subtract 10
65	Subtract 25

NOTE III—Temperatures shall be determined in accordance with the latest revision of IEEE Std 113, *Test Code for Direct-current Machines.*

NOTE IV—The foregoing values of temperature rise are based upon operation at altitudes of 3300 feet (1000 meters) or less. For temperature rises for motors intended for operation at altitudes above 3300 feet (1000 meters), see MG 1-14.04.

▲ Revised.

Not for Resale

9009279 0003426 410

C. SHORT-TIME-RATED DIRECT-CURRENT INTEGRAL-HORSEPOWER MOTORS ▲

	Motors Rated 5 and 15 Minutes (See MG 1-10.63)							
	Drip-proof, Forced-ventilated and Other Enclosures (See Note IV)				Totally-enclosed Nonventilated and Totally-enclosed Fan-cooled Motors, Including Variations Thereof			
CLASS OF INSULATION SYSTEM (See MG 1-1.65)	A	B	F	H	A	B	F	H
TEMPERATURE RISE, DEGREES C								
1. ARMATURE WINDINGS AND ALL OTHER WINDINGS OTHER THAN THOSE GIVEN IN PAR. 2 AND 3 Resistance	80	115	145	175	90	125	155	185
2. MULTI-LAYER FIELD WINDINGS Resistance	80	115	145	175	90	125	155	185
3. SINGLE-LAYER FIELD WINDINGS WITH EXPOSED UNINSULATED SURFACES AND BARE COPPER WINDINGS Resistance	80	115	145	175	90	125	155	185
4. The temperature attained by cores, commutators, and miscellaneous parts (such as brushholders, brushes, pole tips, etc.) shall not injure the insulation or the machine in any respect.								

(*Continued*)

Copyright National Electrical Manufacturers Association
Provided by IHS under license with NEMA
No reproduction or networking permitted without license from IHS
Not for Resale

Copyright National Electrical Manufacturers Association
Provided by IHS under license with NEMA
No reproduction or networking permitted without license from IHS

(*Continued*)

	Motors Rated 30 and 60 Minutes (See MG 1-10.63)							
	Drip-proof, Forced-ventilated and Other Enclosures (See Note IV)				Totally-enclosed Nonventilated and Totally-enclosed Fan-cooled Motors, Including Variations Thereof			
CLASS OF INSULATION SYSTEM (See MG 1-1.65)	A	B	F	H	A	B	F	H
TEMPERATURE RISE, DEGREES C								
1. ARMATURE WINDINGS AND ALL OTHER WINDINGS OTHER THAN THOSE GIVEN IN PAR. 2 AND 3								
Resistance	70	100	130	155	80	110	140	165
2. MULTI-LAYER FIELD WINDINGS								
Resistance	70	100	130	155	80	110	140	165
3. SINGLE-LAYER FIELD WINDINGS WITH EXPOSED UNINSULATED SURFACES AND BARE COPPER WINDINGS								
Resistance	70	100	130	155	80	110	140	165
4. The temperature attained by cores, commutators, and miscellaneous parts (such as brushholders, brushes, pole tips, etc.) shall not injure the insulation or the machine in any respect.								

NOTE I—All temperature rises are based on a maximum ambient temperature of 40°C. Abnormal deterioration of insulation may be expected if this ambient temperature is exceeded in regular operation. See Note V.

NOTE II— Temperatures shall be determined in accordance with the latest revision of IEEE Std 113, *Test Code for Direct-current Machines.*

NOTE III—The foregoing values of temperature rise are based upon operation at altitudes of 3300 feet (1000 meters) or less. For temperature rises for motors intended for operation at altitudes above 3300 feet (1000 meters), see MG 1-14.04.

NOTE IV—Forced-ventilated motors are defined in MG 1-1.25, par. F and G, and MG 1-1.26, par. F.

NOTE V—When the rated maximum ambient temperature is other than 40°C, the rated value shall be 25°C, 50°C or 65°C. The maximum temperature rise values for each machine part shall be the value selected from the appropriate table with an adjustment as follows:

Rated Maximum Ambient Temperature, Degrees C	Adjustment to Temperature Rise Values, Degrees C
25	Add 15
50	Subtract 10
65	Subtract 25

NEMA Standard 6-24-1949, revised 11-17-1949; 6-22-1950; 1-23-1951; 6-28-1951; 11-15-1951; 11-14-1957; 11-12-1959; 5-24-1960; 11-17-1960; 5-21-1962; 11-15-1962; 1-21-1964; 8-19-1964; 11-12-1964; 7-7-1965; 11-11-1965; 11-12-1970; 1-25-1972; 11-8-1973; 9-17-1981.

▲ Revised.

9009279 0003427 357
Not for Resale

9009279 0003428 293

MG 1-12.63 Variation from Rated Voltage

Motors shall operate successfully, using the power supply selected for the basis of rating, up to and including 110 percent of rated direct-current armature and field voltages and, in the case of motors operating from a rectifier power supply, with a variation of plus or minus 10 percent of rated alternating-current line voltage.

NEMA Standard 6-24-1949, revised 11-11-1965; 1-25-1972; 11-17-1974.

Performance within this voltage variation will not necessarily be in accordance with the standards established for operation at rated voltage. For operation below base speed, see MG 1-14.63.

Authorized Engineering Information 1-25-1972.

MG 1-12.64 Variation in Speed Due to Load

A. STRAIGHT-SHUNT-WOUND, STABILIZED-SHUNT-WOUND, AND PERMANENT MAGNET DIRECT-CURRENT MOTORS▲

The variation in speed from rated load to no load of a straight-shunt-wound, stabilized-shunt-wound, or permanent magnet direct-current motor having a rating listed in MG 1-10.62 shall not exceed the following when the motor is operated at rated armature voltage, with the winding at the constant temperature attained when operating at base speed rating, and the ambient temperature is within the usual service range given in par. A.1 of MG 1-14.02:

Hp	Speed Regulation, Percent (at Base Speed)
Less than 3	25
3 thru 50	20
51 thru 100	15
101 and larger	10

NEMA Standard 6-24-1949, revised 11-17-1949; 11-12-1959; 1-25-1972; 9-20-1978; 3-19-1980.

Variation in speed due to loads when operating at speeds higher than base speeds may be greater than the values in the above table.

Authorized Engineering Information 9-20-1978.

B. COMPOUND-WOUND DIRECT-CURRENT MOTORS

The variation in speed from rated load to no load of a compound-wound direct-current motor having a rating listed in MG 1-10.62 shall not exceed the values given in the following table for fractional-horsepower motors and shall be approximately 30 percent of the rated load speed for integral-horsepower motors when the motor is operated at rated voltage, with the windings at the constant temperature attained when operating at its rating, and the ambient temperature is within the usual service range given in par. A.1 of MG 1-14.02:

Hp	Speed, Rpm	Speed Regulation, Percent
1/20 to 1/8, incl.	1725	30
1/20 to 1/8, incl.	1140	35
1/6 to 1/3, incl.	1725	25
1/6 to 1/3, incl.	1140	30
1/2 to 3/4, incl.	1725	22
1/2	1140	25

NEMA Standard 6-24-1949, revised 11-17-1949; 11-12-1959; 1-25-1972.

MG 1-12.65 Variation in Base Speed Due to Heating▲

A. The variation in base speed of straight-shunt-wound, stabilized-shunt-wound, and permanent magnet direct-current motors from that at rated load at ambient temperature to that at rated load at the temperature attained at rated load armature and field voltage following a run of the specified duration shall not exceed the following percentage of the rated base speed:

Enclosure Type	Percentage Variation of Rated Load Base Speed — Insulation System Class A	B	F	H
Open	10	15	20	25
Totally Enclosed	15	20	25	30

NEMA Standard 6-24-1949, revised 6-22-1950; 11-12-1959; 11-11-1965; 1-25-1972; 3-19-1980.

B. When the temperature of the motor winding changes from ambient temperature to that attained when the motor is operating at its rating, the resistance of the motor windings will increase approximately 30 percent for motors having Class A insulation systems, 40 percent for motors having Class B insulation systems, and 50 percent for motors having Class F insulation systems. With a constant voltage power supply, this will result in a speed change as large as that given in par. A. Considering all factors, the speed of direct-current motors may either decrease or increase as the motor winding temperature increases. For fractional-horsepower motors, the armature current form factor will also increase slightly with increasing motor winding temperature, but only with a single-phase rectifier is this likely to be significant.

Authorized Engineering Information 1-25-1972.

MG 1-12.66 Variation from Rated Speed

The variation above or below the rated full-field speed of a direct-current motor shall not exceed the following when operated at rated load and voltage and at full field with the windings at the constant temperature attained when operating at its rating:

Frame Designation	Percent of Rated Full Field Speed
Smaller than 42	10
42 and larger	7-1/2

NEMA Standard 6-24-1949, revised 6-22-1950; 1-23-1951; 11-12-1959; 1-25-1972.

▲ Revised.

Copyright National Electrical Manufacturers Association
Provided by IHS under license with NEMA
No reproduction or networking permitted without license from IHS
Not for Resale

9009279 0003429 12T

MG 1-12.67 Momentary Overload Capacity

Direct-current motors shall be capable of carrying successfully for 1 minute an armature current at least 50 percent greater than the rated armature current at rated voltage. For adjustable-speed motors, this capability shall apply for all speeds within the rated speed range when operated from the intended power supply.

NEMA Standard 11-15-1951, revised 11-12-1959; 11-11-1965; 1-25-1972.

MG 1-12.68 Successful Commutation

Successful commutation is attained if neither the brushes nor the commutator are burned or injured in the conformance test or in normal service to the extent that abnormal maintenance is required. The presence of some visible sparking is not necessarily evidence of unsuccessful commutation.

NEMA Standard 11-11-1965.

MG 1-12.69 Overspeeds for Motors

A. SHUNT-WOUND MOTORS

Direct-current shunt-wound motors shall be so constructed that, in an emergency of short duration, they will withstand without mechanical injury an overspeed of 25 percent above the highest rated speed or 15 percent above the corresponding no-load speed, whichever is greater.

B. COMPOUND-WOUND MOTORS HAVING SPEED REGULATION OF 35 PERCENT OR LESS

Compound-wound motors shall be so constructed that, in an emergency of short duration, they will withstand without mechanical injury an overspeed of 25 percent above the highest rated speed or 15 percent above the corresponding no-load speed, whichever is greater, but not exceeding 50 percent above the highest rated speed.

C. SERIES-WOUND MOTORS AND COMPOUND-WOUND MOTORS HAVING SPEED REGULATION GREATER THAN 35 PERCENT

Since these motors require special consideration depending upon the application for which they are intended, the manufacturer shall assign a maximum safe operating speed which shall be stamped on the nameplate. These motors shall be so constructed that, in an emergency of short duration, they will withstand without mechanical injury an overspeed which is 10 percent above the maximum safe operating speed. The safe operating speed marking is not required on the nameplates of fractional-horsepower motors which are capable of withstanding a speed which is 10 percent above the no-load speed.

D. PERMANENT-MAGNET EXCITED MOTORS

Permanent-magnet excited motors shall withstand the overspeeds specified in par. A unless the motor also has a series winding, in which case they shall withstand the overspeeds specified in par. A and B as appropriate.

NEMA Standard 11-1-1946, revised 11-13-1952; 11-17-1955; 11-17-1966; 11-16-1967; 11-13-1969; 11-8-1973.

MG 1-12.70 Field Data for Direct-current Motors

See MG 1-12.76.

MG 1-12.71 Routine Tests on Integral-horsepower Direct-current Motors ▲

Typical tests which may be made on integral-horsepower direct-current motors are listed below. All tests should be made in accordance with IEEE Std 113, *Test Code for Direct-current Machines.*

1. No-load readings at rated voltage on all shunt-, stabilized-shunt, compound-wound, and permanent magnet motors; quarter-load readings on all series-wound motors.
2. Full-load readings at base and highest rated speed on all motors having a continuous torque rating greater than that of a 15-horsepower 1750-rpm motor. Commutation shall be observed when full-load readings are taken.
3. High-potential test in accordance with MG 1-3.01 and MG 1-12.03.

NOTE—The word "readings" in the foregoing paragraphs includes the following:

1. Speed in revolutions per minute.
2. Voltage at motor terminals.
3. Amperes in armature.
4. Amperes in shunt field.

Recommended Standard 6-24-1949, revised 11-17-1949; NEMA Standard 11-12-1953, revised 7-21-1954; 11-12-1959, Authorized Engineering Information 8-19-1964, revised 11-8-1973; 3-19-1980.

MG 1-12.72 Report of Test Form for Direct-current Machines

For typical test forms, see IEEE Std 113, *Test Code for Direct-current Machines.*

NEMA Standard 10-27-1939, Authorized Engineering Information 11-12-1964.

MG 1-12.73 Efficiency

A. TYPE A POWER SUPPLIES

Efficiency and losses shall be determined in accordance with IEEE Std 113, *Test Code for Direct-current Machines,* using the direct measurement method or the segregated losses method. The efficiency shall be determined at rated output, voltage and speed. In the case of adjustable-speed motors, the base speed shall be used unless otherwise specified.

The following losses shall be included in determining the efficiency:

▲ Revised.

Copyright National Electrical Manufacturers Association
Provided by IHS under license with NEMA
No reproduction or networking permitted without license from IHS
Not for Resale

9009279 0003430 941

1. I^2R loss of armature.
2. I^2R loss of series windings (including commutating, compounding and compensating fields, where applicable).
3. I^2R loss of shunt field.*
4. Core loss.
5. Stray load loss.
6. Brush contact loss.
7. Brush friction loss.
8. Exciter loss if exciter is supplied with and driven from the shaft of the machine.
9. Ventilating losses.
10. Friction and windage loss.†

* For separately excited motors, the shunt field I^2R loss may be omitted from the efficiency calculation if so stated.
† In the case of motors furnished with thrust bearings, only that portion of the thrust bearing loss produced by the motor itself shall be included in the efficiency calculations. Alternatively, a calculated value of efficiency, including bearing loss due to external thrust load, may be specified.
In the case of motors furnished with less than a full set of bearings, friction and windage losses which are representative of the actual installation shall be determined by (1) calculation or (2) experience with shop test bearings and shall be included in the efficiency calculations.

In determining I^2R losses, the resistance of each winding shall be corrected to a temperature equal to an ambient temperature of 25°C plus the observed rated load temperature rise measured by resistance. When the rated load temperature rise has not been measured, the resistance of the winding shall be corrected to the following temperature:

Class of Insulation System‡	Temperature, Degrees C
A	85
B	110
F	135
H	155

‡ Where the rated temperature rise is that of a lower class of insulation system, the temperature used for resistance correction shall be that of the lower insulation class.

NEMA Standard 5-14-1973.

B. OTHER POWER SUPPLIES

It is not possible to make a simulated test which will determine motor efficiency in a particular rectifier system. Only by directly measuring input watts (not the product of average volts and average amperes) using the power supply to be used in an application can the motor efficiency in that system be accurately determined. The extra losses due to the ripple in the current, and especially those due to magnetic pulsations, are a function not only of the magnitude of the armature current ripple but, also, of the actual wave shape.

Authorized Engineering Information 1-25-1972, revised 5-14-1973.

MG 1-12.74 Stability

When motors are operated in feedback control systems, due attention should be paid to stability problems. Any such problems would necessarily have to be solved by the joint efforts of the system designer, the motor manufacturer, and the manufacturer of the power supply.

Authorized Engineering Information 1-25-1972, revised 5-15-1978.

MG 1-12.75 Overtemperature Protection of Integral-horsepower Direct-current Motors

Overtemperature protection of the various windings in a direct-current motor, especially the armature winding which rotates, is considerably more complex than the protection of the stator winding of an alternating-current motor. The wide range of load and speed (ventilation) in the typical direct-current motor application adds to the difficulty. Current-sensing devices located remotely from the motor (frequently in control panels) cannot match the thermal characteristics of direct-current motors over a wide speed range because of these variable motor cooling conditions.

In order to improve the degree of overtemperature protection, a temperature sensing protector may be installed in a direct-current motor. However, the precision of protection in overtemperature-protected direct-current motors is less than that possible in alternating-current motors. In overtemperature-protected direct-current motors, the protector is usually mounted on or near the commutating coil. Since this winding carries armature load current, its temperature tends to rise and fall with changes in load in a manner similar to the temperature of the armature winding. The motor manufacturer will choose the protector and its mounting arrangement to prevent excessive temperatures of either the commutating field or the armature winding under most conditions of operation. However, under unusual loading conditions, the overtemperature protector may not be able to prevent the armature winding from reaching excessive temperatures for short periods. Maximum winding temperatures at operation of the overtemperature protector will exceed the rated temperature rise. Repeated operation of the overtemperature protector indicates a system installation which should be investigated.

If a direct-current motor is specified to be overtemperature protected, the user must inform the motor manufacturer whether a normally open or a normally closed contact device is required, and the voltage, current and frequency rating of the circuit which this device must open or close.

Authorized Engineering Information 12-16-1971, revised 5-17-1972; 9-20-1973.

Copyright National Electrical Manufacturers Association
Provided by IHS under license with NEMA
No reproduction or networking permitted without license from IHS
Not for Resale

9009279 0003431 888

MG 1-12.76 Data for Direct-current Motors

The following may be used in supplying data for direct-current motors:

1. Manufacturer's type and frame designation _____
2. Requisition or order number _____
3. Rated horsepower _____
4. Time rating _____
5. Enclosure type _____
6. Insulation system _____
7. Maximum ambient temperature _____
8. Intended for use on power supply _____
9. (Check one) straight-shunt wound ( ), stabilized-shunt wound ( ), compound wound ( ), series wound ( ) or permanent magnet ( )
10. Rated voltage
    a. Armature _____ volts, average
    b. Shunt field _____ volts, average
11. Rated armature current _____ amperes, average
12. Rated form factor _____ or rms current _____ amperes
13. Resistance of windings at 25°C
    a. Armature _____ ohms
    b. Commutating (and compensating, if used) _____ ohms
    c. Series _____ ohms
    d. Shunt _____ ohms
14. Field amperes to obtain the following speeds at rated load amperes:
    a. Base speed _____ rpm _____ amperes
    b. 150% of base speed, if applicable _____ rpm _____ amperes
    c. Highest rated speed _____ rpm _____ amperes
15. Saturated inductances
    a. Total armature circuit _____ millihenries
    b. Minimum external _____ millihenries
16. Armature inertia (Wk^2) _____ $lb\text{-}ft^2$
17. If separately ventilated, minimum cubic feet per minute and static pressure _____ cfm _____ inches of water
18. Maximum safe operating speed (for all series-wound and compound-wound motors having speed regulation greater than 35 percent) _____ rpm
19. Temperature protection data _____

NOTE—For permanent-magnet motors and other motor designs, some of the above listed items may not be applicable. Other data may be given.

Recommended Standard 5-15-1941, revised 11-17-1949, NEMA Standard 11-12-1953, revised 11-12-1959, Authorized Engineering Information 11-11-1965, revised 1-25-1973.

Copyright National Electrical Manufacturers Association
Provided by IHS under license with NEMA
No reproduction or networking permitted without license from IHS
Not for Resale

9009279 0003432 714

MG 1-12.77 Airborne Sound of Direct-current Integral-horsepower Motors

A. Sound Measurements

Motor sound should be measured in accordance with IEEE Std 85, *Test Procedure for Airborne Sound Measurements on Rotating Electric Machinery,* expressed as overall sound power levels using the A weighting network, and stated in decibels (reference = 10^{-12} watts).

Sound measurements should be taken when (1) the motor is connected to a low-ripple, Type A, power supply and (2) the motor is operated at no load at base speed.

Because of the many combinations of variables, it is not practical to establish sound power level values for direct-current motors which operate at various speeds and loads and with different power supplies.

B. Application

Sound power values are related to the sound source and are not affected by environmental conditions. They are calculated from test data taken under prescribed conditions, and the values can be repeated. Field measurements are measured in sound pressure. Measurements of sound pressure levels of motors installed in the field can be correlated to sound power levels, using the corrections to environmental conditions as outlined in the NEMA Standards Publication for *Sound Level Prediction for Installed Rotating Electrical Machines,* MG 3.

Motors operated above base speed will usually have higher sound levels. Motors operated from rectifier power supplies inherently produce higher sound levels than those operated from low-ripple power supplies.

C. Sound Levels of Dripproof Industrial Direct-current Motors

The sound power levels of dripproof industrial direct-current motors, when determined in accordance with par. A, generally do not exceed the values given in the following table.

Authorized Engineering Information 1-17-1974, revised 11-14-1974.

Sound Power Levels*, in Decibels, of Dripproof Industrial Direct-current Motors Using the "A" Weighting Network
(Reference = 10^{-12} Watt)

Hp	Base Speed, Rpm			
	850	1150	1750	2500
1	60	63	72	81
1½	60	63	72	81
2	61	64	72	81
3	62	66	72	82
5	66	68	75	84
7½	69	71	77	86
10	71	73	79	88
15	74	77	82	90
20	75	79	84	92
25	77	81	86	94
30	78	82	88	95
40	79	84	90	96
50	80	85	91	...
60	81	86	92	...
75	82	87	93	...
100	83	88	94	...
125	83	88	95	...
150	84	89	95	...
200	85	90	96	...

* These values are the overall sound power levels. They should not be confused with sound pressure levels which are measured by a sound level meter at a specified location.

Copyright National Electrical Manufacturers Association
Provided by IHS under license with NEMA
No reproduction or networking permitted without license from IHS
Not for Resale

9009279 0003433 650

Section II

FRACTIONAL- AND INTEGRAL-HORSEPOWER MACHINES

Part 14. Application Data— AC and DC Motors and Generators

The standards in this Part 14 of Section II cover the following machines:

A. Alternating-current Motors and Generators

Alternating-current motors and generators up to and including the ratings built in frames corresponding to the continuous open-type ratings given in the table below:

Synchronous Speed	Motors, Squirrel-cage and Wound Rotor, Hp	Motors, Synchronous, Hp — Power Factor		Generators, Synchronous, Revolving Field Type, kW at 0.8 Power Factor
		Unity	0.8	
3600	500	200	150	...
1800	500	200	150	150
1200	350	200	150	150
900	250	150	125	100
720	200	125	100	100
600	150	100	75	75
514	125	75	60	60

B. Direct-current Motors and Generators

Direct-current motors and generators built in frames with continuous drip-proof ratings, or equivalent capacities, up to and including:

motors: 1.25 horsepower per rpm, open type.
generators: 1.0 kilowatt per rpm, open type.

Copyright National Electrical Manufacturers Association
Provided by IHS under license with NEMA
No reproduction or networking permitted without license from IHS
Not for Resale

9009279 0003434 597

Part 14

APPLICATION DATA

AC AND DC FRACTIONAL- AND INTEGRAL-HORSEPOWER MOTORS AND GENERATORS

MG 1-14.01 Proper Selection of Apparatus

Motors and generators should be properly selected with respect to their service conditions, usual or unusual, both of which involve the environmental conditions to which the machine is subjected and the operating conditions. Machines conforming to Parts 10 through 16 of this publication are designed for operation in accordance with their ratings under usual service conditions. Some machines may also be capable of operating in accordance with their ratings under one or more unusual service conditions. Definite-purpose or special-purpose machines may be required for some unusual conditions.

Service conditions, other than those specified as usual, may involve some degree of hazard. The additional hazard depends upon the degree of departure from usual operating conditions and the severity of the environment to which the machine is exposed. The additional hazard results from such things as overheating, mechanical failure, abnormal deterioration of the insulation system, corrosion, fire and explosion.

Although past experience of the user may often be the best guide, the manufacturer of the driven or driving equipment and/or the motor and generator manufacturer should be consulted for further information regarding any unusual service conditions which increase the mechanical or thermal duty on the machine and, as a result, increase the chances for failure and consequent hazard. This further information should be considered by the user, his consultants, or others most familiar with the details of the application involved when making the final decision.

NEMA Standard 10-29-1937, revised 6-28-1951, Authorized Engineering Information 11-11-1965; revised 7-15-1970.

MG 1-14.02 Usual Service Conditions

Usual service conditions are as follows:

A. Environmental Conditions

1. Exposure to an ambient temperature in the range of 0 °C to 40 °C or, when water cooling is used, in the range of 10 °C to 40 °C.
2. Exposure to an altitude which does not exceed 3300 feet (1000 meters) (see MG 1-14.04).
3. Installation on a rigid mounting surface.
4. Installation in areas or supplementary enclosures which do not seriously interfere with the ventilation of the machine.

B. Operating Conditions

1. V-belt drive in accordance with MG 1-14.42 for alternating-current motors and with MG 1-14.67.a for industrial direct-current motors.
2. Flat-belt, chain and gear drives in accordance with MG 1-14.07.

Authorized Engineering Information 10-27-1926, revised 5-17-1955; 7-7-1965; 11-11-1965; 11-16-1967; 7-15-1970.

MG 1-14.03 Unusual Service Conditions ▲

The manufacturer should be consulted if any unusual service conditions exist which may affect the construction or operation of the motor. Among such conditions are:

1. Exposure to:
   a. Combustible, explosive, abrasive or conducting dusts.
   b. Lint or very dirty operating conditions where the accumulation of dirt will interfere with normal ventilation.
   c. Chemical fumes, flammable or explosive gases.
   d. Nuclear radiation.
   e. Steam, salt-laden air, or oil vapor.
   f. Damp or very dry locations, radiant heat, vermin infestation, or atmospheres conducive to the growth of fungus.
   g. Abnormal shock, vibration, or mechanical loading from external sources.
   h. Abnormal axial or side thrust imposed on the motor shaft.
2. Operation where:
   a. There is excessive departure from rated voltage and/or frequency (see MG 1-12.43, MG 1-12.44 and MG 1-12.45 for alternating-current motors, and MG 1-12.63 for direct-current motors).
   b. The deviation factor of the alternating-current supply voltage exceeds 10 percent.
   c. The alternating-current supply voltage is unbalanced by more than 1 percent (see MG 1-12.45.a and MG 1-14.34).
   d. The rectifier output supplying a direct-current motor is unbalanced so that the

▲ Revised.

Copyright National Electrical Manufacturers Association
Provided by IHS under license with NEMA
No reproduction or networking permitted without license from IHS
Not for Resale

9009279 0003435 423

difference between the highest and lowest peak amplitudes of the current pulses over one cycle exceed 10 percent of the highest pulse amplitude at rated armature current.

e. Low noise levels are required.

3. Operation at speeds above the highest rated speed.
4. Operation in a poorly ventilated room, in a pit, or in an inclined position.
5. Operation where subjected to:
   a. Torsional impact loads.
   b. Repetitive abnormal overloads.
   c. Reversing or electric braking.
6. Operation of machine at standstill with any winding continuously energized or of short-time rated machine with any winding continuously energized.
7. Operation of direct-current machine where the average armature current is less than 50 percent of the rated full-load amperes over a 24-hour period, or continuous operation at armature current less than 50 percent of rated current for more than 4 hours.

Authorized Engineering Information 10-27-1926, revised 11-11-1965; 11-16-1967; 7-15-1970; 1-25-1972; 11-8-1973; 3-14-1979.

MG 1-14.04 Operation at Altitudes Above 3300 Feet (1000 Meters)

The temperature rises given for motors and generators in MG 1-12.41, MG 1-12.42, MG 1-12.62 and MG 1-15.41 are based upon operation at altitudes of 3300 feet (1000 meters) or less and a maximum ambient temperature of 40°C. It is also recognized as good practice to use motors and generators at altitudes greater than 3300 feet (1000 meters) as indicated in the following paragraphs:

A. Motors and generators having Class A or B insulation systems and temperature rises in accordance with MG 1-12.41, MG 1-12.42, MG 1-12.62 and MG 1-15.41 will operate satisfactorily at altitudes above 3300 feet (1000 meters) in those locations where the decrease in ambient temperature compensates for the increase in temperature rise, as follows:

Ambient Temperature, Degrees C	Maximum Altitude, Feet (Meters)
40	3300 (1000)
30	6600 (2000)
20	9900 (3000)

B. Motors having a service factor of 1.15 or higher will operate satisfactorily at unity service factor at an ambient temperature of 40°C at altitudes above 3300 feet (1000 meters) up to 9000 feet (2740 meters).

C. Motors and generators which are intended for use at altitudes above 3300 feet (1000 meters) at an ambient temperature of 40°C should have temperature rises at sea level not exceeding the values calculated from the following formula:

When altitude in feet:

$$T_{RSL} = T_{RA}\left[1 - \frac{(Alt - 3300)}{33000}\right]$$

—or—

When altitude in meters:

$$T_{RSL} = T_{RA}\left[1 - \frac{(Alt - 1000)}{10000}\right]$$

where:

T_{RSL} = test temperature rise in degrees C at sea level.
T_{RA} = temperature rise in degrees C from the appropriate table in MG 1-12.41, MG 1-12.42, MG 1-12.62 or MG 1-15.41.
Alt = altitude above sea level in feet (meters) at which machine is to be operated.

D. Preferred values of altitude are 3300 feet (1000 meters), 6600 feet (2000 meters), 9900 feet (3000 meters), 13200 feet (4000 meters) and 16500 feet (5000 meters).

Authorized Engineering Information 11-12-1964.

MG 1-14.05 Short-time Rated Electrical Machines

Short-time rated electrical machines (see MG 1-10.35 and MG 1-10.63) should be applied so as to insure performance without injury. They should not be used (except on the recommendation of the manufacturer) on any application where the driven machine may be left running continuously.

NEMA Standard 10-29-1937.

MG 1-14.06 Direction of Rotation

Facing the end of the machine opposite the drive, the standard direction of rotation for all nonreversing direct-current motors, all alternating-current single-phase motors, all synchronous motors and all universal motors shall be counterclockwise. For alternating- and direct-current generators, the rotation shall be clockwise. Where two or more machines are mechanically coupled together, this standard may not apply to all units.

NEMA Standard 1-26-1934.

NOTE—This does not apply to polyphase induction motors as most applications on which they are used are of such a nature that either or both directions of rotation may be required, and the phase sequence of the power lines is rarely known.

Authorized Engineering Information 1-26-1934.

Copyright National Electrical Manufacturers Association
Provided by IHS under license with NEMA
No reproduction or networking permitted without license from IHS
Not for Resale

9009279 0003436 36T

MG 1-14.07 Application of Pulleys, Sheaves, Sprockets and Gears on Motor Shafts

A. MOUNTING

In general, the closer pulleys, sheaves, sprockets or gears are mounted to the bearing on the motor shaft, the less will be the load on the bearing. This will give greater assurance of trouble-free service.

The center point of the belt, or system of V-belts, must not be beyond the end of the motor shaft.

The inner edge of the sheave or pulley rim should not be closer to the bearing than the shoulder on the shaft but should be as close to this point as possible.

The outer edge of a chain sprocket or gear must not extend beyond the end of the motor shaft.

B. MINIMUM PITCH DIAMETER FOR DRIVES OTHER THAN V-BELT

To obtain the minimum pitch diameters for flat-belt, timing-belt, chain and gear drives, the multiplier given in the following table should be applied to the narrow V-belt sheave pitch diameters in MG 1-14.42 for alternating-current general-purpose motors or to the V-belt sheave pitch diameters as determined from MG 1-14.67.a for industrial direct-current motors:

Drive	Multiplier
Flat belt (see Note I)	1.33
Timing belt (see Note II)	0.9
Chain sprocket	0.7
Spur gear	0.75
Helical gear	0.85

NOTE I—The above multiplier is intended for use with conventional single-ply flat belts. When other than single-ply flat belts are used, the use of a larger multiplier is recommended.
NOTE II—It is often necessary to install timing belts with a snug fit. However, tension should be no more than that necessary to avoid belt slap or tooth jumping.

C. MAXIMUM SPEED OF DRIVE COMPONENTS

The maximum speed of drive components must not exceed the values recommended by the component manufacturer or the values specified in the industry standards to which the component manufacturer indicates conformance. Speeds above the maximum recommended speed may result in damage to the equipment or injury to personnel.

Authorized Engineering Information 6-24-1949, revised 11-16-1967; 5-12-1975.

MG 1-14.08 Through-bolt Mounting

Some motor users have found it to their advantage to cast the motor drive end shield as an integral part of the driven machine and, consequently, they purchase the motor without the drive end shield. In view of the considerable range and variety of stator rabbet diameters, clamp bolt circle diameters and clamp bolt sizes among motors of differing manufacture, this type of driven machine construction may seriously limit the users' choice of motor suppliers unless adequate machining flexibility has been provided in the design of this end shield.

In order to assist the machine designer in providing such flexibility, the following data have been compiled to give some indication of the range of motor rabbet and clamp bolt circle diameters which may be involved. The following table is based on information supplied by member companies of the NEMA Motor and Generator Section who build motors in these frame sizes.

	48 Frame, Inches	56 Frame, Inches
Motor Rabbet Diameter		
Smallest diameter reported	5.25	5.875
Largest diameter reported	5.625	6.5
Over 75 percent of respondents reported diameters within range of	5.34–5.54	6.03–6.34
Motor Clamp Bolt Circle Diameter		
Smallest diameter reported	4.875	5.5
Largest diameter reported	5.250	6.25
Over 75 percent of respondents reported diameters within range of	5.00–5.25	5.65–5.94
Motor Clamp Bolt Size		
Smallest size reported	#8	#10
Largest size reported	#10	#10

Authorized Engineering Information 11-17-1960.

MG 1-14.09 Rodent Protection

It is often desirable to provide rodent protection in an open machine in order to retard the entrance of small rodents into the machine. Protection may be provided by limiting the size of the openings giving direct access to the internal parts of the machine by means of screens, baffles, grills, expanded metal, structural parts of the machine, or by other means. The means employed may vary with the size of the machine. In such cases, care must be taken to insure adequate ventilation since restricting the air flow could cause the machine to exceed its temperature rating. Before applying screens, baffles, expanded metal, etc., to a machine for rodent protection, the motor or generator manufacturer should be consulted.

NOTE—A common construction restricts the openings giving direct access to the interior of the machine so that a 0.312-inch-diameter rod cannot enter the opening.

Authorized Engineering Information 11-13-1969.

Copyright National Electrical Manufacturers Association
Provided by IHS under license with NEMA
No reproduction or networking permitted without license from IHS
Not for Resale

9009279 0003437 2T6

SECTION II

FRACTIONAL- AND INTEGRAL-HORSEPOWER MACHINES

Part 14. Application Data—AC Motors

The standards in this Part 14 of Section II cover alternating-current motors up to and including the ratings built in frames corresponding to the continuous open-type ratings given in the table below:

Synchronous Speed	Motors, Squirrel-cage and Wound Rotor, Hp	Motors, Synchronous, Hp	
		Power Factor	
		Unity	0.8
3600	500	200	150
1800	500	200	150
1200	350	200	150
900	250	150	125
720	200	125	100
600	150	100	75
514	125	75	60

Copyright National Electrical Manufacturers Association
Provided by IHS under license with NEMA
No reproduction or networking permitted without license from IHS
Not for Resale

9009279 0003438 132

Part 14

APPLICATION DATA

AC FRACTIONAL- AND INTEGRAL-HORSEPOWER MOTORS

MG 1-14.30 Effects of Variation of Voltage and Frequency upon the Performance of Induction Motors

A. Induction motors are at times operated on circuits of voltage or frequency other than those for which the motors are rated. Under such conditions, the performance of the motor will vary from the rating. The following is a brief statement of some operating results caused by small variations of voltage and frequency and is indicative of the general character of changes produced by such variation in operating conditions.

B. With a 10 percent increase or decrease in voltage from that given on the nameplate, the heating at rated horsepower load may increase. Such operation for extended periods of time may accelerate the deterioration of the insulation system.

C. In a motor of normal characteristics at full rated horsepower load, a 10 percent increase of voltage above that given on the nameplate would usually result in a decided lowering in power factor. A 10 percent decrease of voltage below that given on the nameplate would usually give an increase in power factor.

D. The locked-rotor and breakdown torque will be proportional to the square of the voltage applied.

E. An increase of 10 percent in voltage will result in a decrease of slip of about 17 percent, while a reduction of 10 percent will increase the slip about 21 percent. Thus, if the slip at rated voltage were 5 percent, it would be increased to 6.05 percent if the voltage were reduced 10 percent.

F. A frequency higher than the rated frequency usually improves the power factor but decreases locked-rotor torque and increases the speed and friction and windage loss. At a frequency lower than the rated frequency, the speed is decreased, locked-rotor torque is increased, and power factor is decreased. For certain kinds of motor load, such as in textile mills, close frequency regulation is essential.

G. If variations in both voltage and frequency occur simultaneously, the effects will be superimposed. Thus, if the voltage is high and the frequency low, the locked-rotor torque will be very greatly increased, but the power factor will be decreased and the temperature rise increased with normal load.

H. The foregoing facts apply particularly to general-purpose motors. They may not always be true in connection will special-purpose motors, built for a particular purpose, or as applied to very small motors.

Authorized Engineering Information 1-31-1925, revised 11-21-1968.

MG 1-14.31 Effects of Voltages over 600 Volts on the Performance of Low-voltage Motors ▲

Polyphase motors are regularly built for voltage ratings of 575 volts or less (see MG 1-10.30) and are expected to operate satisfactorily with a voltage variation of plus or minus 10 percent. This means that motors of this insulation level may be successfully applied up to an operating voltage of 635 volts.

Based on motor manufacturers' high-potential tests and performance in the field, it has been found that where utilization voltages exceed 635 volts, the safety factor of the insulation has been reduced to a level inconsistent with good engineering procedure.

In view of the foregoing, motors of this insulation level should not be applied to power systems either with or without grounded neutral where the utilization voltage exceeds 635 volts, regardless of the motor connection employed.

However, there are some definite-purpose motors that are intended for operation on a grounded 830-volt system. Such motors are suitable for 460-volt operation when delta connected and for 796-volt operation when wye connected with the neutral of the system connection is solidly grounded.

Authorized Engineering Information 11-11-1948, revised 11-17-1966; 5-14-1973.

MG 1-14.32 Operation of General-purpose Alternating-current Polyphase, 2-, 4-, 6- and 8-pole, 60-hertz Integral-horsepower Induction Motors Operated on 50 hertz

While general-purpose alternating-current polyphase, 2-, 4-, 6- and 8-pole, 60-hertz integral-horsepower induction motors are not designed to operate at their 60-hertz ratings on 50-hertz circuits, they are capable of being operated satisfactorily on 50-hertz circuits if their voltage and horsepower ratings are appropriately reduced. When such 60-hertz motors are operated on 50-hertz circuits, the applied voltage at 50 hertz should be reduced to 5/6 of the 60-hertz voltage rating of the motor and the horsepower load at 50

▲ Editorially revised.

Copyright National Electrical Manufacturers Association
Provided by IHS under license with NEMA
No reproduction or networking permitted without license from IHS
Not for Resale

9009279 0003439 079

hertz should be reduced to 5/6 of the 60-hertz horsepower rating of the motor.

When a 60-hertz motor is operated on 50 hertz at 5/6 of the 60-hertz voltage and horsepower ratings, the other performance characteristics for 50-hertz operation are as follows:

A. SPEED

The synchronous speed will be 5/6 of the 60-hertz synchronous speed, and the slip will be 5/6 of the 60-hertz slip.

B. TORQUES

The rated load torque in pound-feet will be approximately the same as the 60-hertz rated load torque in pound-feet.

The locked-rotor and breakdown torques in pound-feet of 50-hertz motors will be approximately the same as the 60-hertz locked-rotor and breakdown torques in pound-feet.

C. LOCKED-ROTOR CURRENT

The locked-rotor current (amperes) will be approximately 5 percent less than the 60-hertz locked-rotor current (amperes). The Code letter appearing on the motor nameplate to indicate locked-rotor kVA per horsepower applies only to the 60-hertz rating of the motor.

D. SERVICE FACTOR

The service factor will be 1.0.

E. TEMPERATURE RISE

The temperature rise will not exceed 90°C. (See MG 1-14.30.)

Authorized Engineering Information 11-16-1967.

MG 1-14.33 Operation of 230-volt Induction Motors on 208-volt Systems

Induction motors intended for operation on 208-volt systems should be rated 208 or 200 volts.

Operation of a motor rated 230 volts on a 208-volt system is not recommended because utilization voltages are commonly encountered below the minus 10 percent tolerance on the voltage rating for which the motor is designed. Such operation will generally result in excessive overheating and serious reduction in torques.

Authorized Engineering Information 8-20-1966; revised 11-21-1968.

MG 1-14.34 Effects of Unbalanced Voltages on the Performance of Polyphase Induction Motors

When the line voltages applied to a polyphase induction motor are not equal, unbalanced currents in the stator windings will result. A small percentage voltage unbalance will result in a much larger percentage current unbalance. Consequently, the temperature rise of the motor operating at a particular load and percentage voltage unbalance will be greater than for the motor operating under the same conditions with balanced voltages.

▲ Revised.

Voltages preferably should be evenly balanced as closely as can be read on a voltmeter. Should voltages be unbalanced, the rated horsepower of the motor should be multiplied by the factor shown in Fig. 14-1 to reduce the possibility of damage to the motor. Operation of the motor above a 5 percent voltage unbalance condition is not recommended.

When the derating curve of Fig. 14-1 is applied for operation on unbalanced voltages the selection and setting of the overload device should take into account the combination of the derating factor applied to the motor and the increase in current resulting from the unbalanced voltages. This is a complex problem involving the variation in motor current as a function of load and voltage unbalance in addition to the characteristics of the overload device relative to $I_{maximum}$ or $I_{average}$. In the absence of specific information it is recommended that overload devices be selected and/or adjusted at the minimum value that does not result in tripping for the derating factor and voltage unbalance that applies. When unbalanced voltages are anticipated it is recommended that the overload devices be selected so as to be responsive to $I_{maximum}$ in preference to overload devices responsive to $I_{average}$.

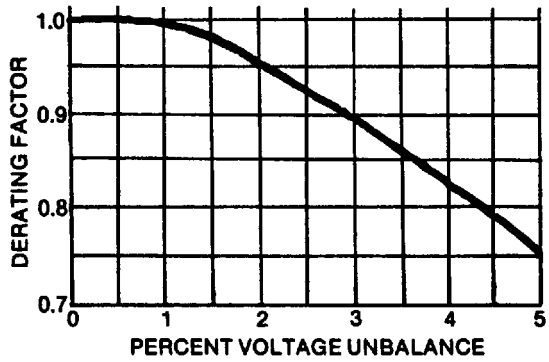

Fig. 14-1
Integral Horsepower Motors Derating Factor Due to Unbalanced Voltage

A. EFFECT ON PERFORMANCE—GENERAL

The effect of unbalanced voltages on polyphase induction motors is equivalent to the introduction of a "negative sequence voltage" having a rotation opposite to that occurring with balanced voltages. This negative sequence voltage produces in the air gap a flux rotating against the rotation of the rotor, tending to produce high currents. A small negative sequence voltage may produce in the windings currents considerably in excess of those present under balanced voltage conditions.

B. UNBALANCE DEFINED

The voltage unbalance (or negative sequence voltage) in percent may be defined as follows:

$$\text{Percent Voltage Unbalance} = 100 \times \frac{\text{Maximum voltage deviation from average voltage}}{\text{Average voltage}}$$

EXAMPLE—With voltages of 460, 467, and 450, the average is 459, the maximum deviation from average is 9, and the percent unbalance = $100 \times \frac{9}{459} = 1.96$ percent. (Authorized Engineering Information 3-8-1983.) ▲

Copyright National Electrical Manufacturers Association
Provided by IHS under license with NEMA
No reproduction or networking permitted without license from IHS
Not for Resale

9009279 0003440 890

C. TORQUES

The locked-rotor torque and breakdown torque are decreased when the voltage is unbalanced. If the voltage unbalance should be extremely severe, the torques might not be adequate for the application.

D. FULL-LOAD SPEED

The full-load speed is reduced slightly when the motor operates at unbalanced voltages.

E. CURRENTS

The locked-rotor current will be unbalanced to the same degree that the voltages are unbalanced but the locked-rotor kVA will increase only slightly.

The currents at normal operating speed with unbalanced voltages will be greatly unbalanced in the order of approximately 6 to 10 times the voltage unbalance.

Authorized Engineering Information 11-13-1952, revised 11-8-1973; 5-15-1978; 3-8-1983.▲

MG 1-14.35 Application of Alternating-current Motors with Service Factors

A. GENERAL

A general-purpose alternating-current motor or any alternating-current motor having a service factor in accordance with MG 1-12.47 is suitable for continuous operation at rated load under the usual service conditions given in MG 1-14.02. When the voltage and frequency are maintained at the value specified on the nameplate, the motor may be overloaded up to the horsepower obtained by multiplying the rated horsepower by the service factor shown on the nameplate.

When the motor is operated at any service factor greater than 1, it may have efficiency, power factor and speed different from those at rated load, but the locked-rotor torque and current and breakdown torque will remain unchanged.

B. TEMPERATURE RISE—
INTEGRAL-HORSEPOWER
ALTERNATING-CURRENT MOTORS

When operated at the service factor load, the motor will have a temperature rise as specified in MG 1-12.42.1.b.

C. TEMPERATURE RISE—
FRACTIONAL-HORSEPOWER
ALTERNATING-CURRENT MOTORS

When operated at the service factor load, the motor will have a temperature rise as specified in MG 1-12.41, par. A.

Authorized Engineering Information 11-12-1964, revised 8-20-1966, 7-14-1971, 11-3-1977.

▲ Revised.

MG 1-14.36 Characteristics of Part-winding-start Polyphase Induction Motors

The result of energizing a portion of the primary winding of a polyphase induction motor will depend upon how this portion is distributed in the motor and, in some cases, may do nothing more than overload the portion of the winding so energized, i.e., result in no noticeable reduction of current or torque. For this reason, a standard 230/460-volt dual voltage motor may or may not be satisfactory for part-winding starting on a 240-volt circuit.

When the winding is distributed so as to be satisfactory for part-winding starting, a commonly used connection results in slightly less than 50 percent of normal locked-rotor torque and approximately 60 percent of normal locked-rotor current. It is evident that the torque may be insufficient to start the motor if it has much friction load. This is not important in applications where it is permissible to draw the full-winding starting current from the system in two increments. (If actual values of torque and current are important, they should be obtained from the motor manufacturer.)

If the motor does start when the first winding is energized, it may not accelerate to full speed. On part winding, it can at best develop less than half the torque it is capable of on full winding and usually the speed-torque characteristic is adversely affected by harmonics resulting from the unbalanced magnetic circuit. Further, the permissible accelerating time on part winding may be less than on full winding because of the higher current in the portion of the winding energized. However, in the usual application, the remainder of the winding is energized a few seconds after the first portion, and the motor then accelerates and runs smoothly. During the portion of the accelerating period that the motor is on part winding, it may be expected to be noisier than when on full winding.

Authorized Engineering Information 5-17-1955.

MG 1-14.37 Coupling End-play and Rotor Float for Horizontal Alternating-current Motors

Operating experience on horizontal sleeve bearing motors has shown that sufficient thrust to damage bearings may be transmitted to the motor through a flexible coupling. Damage to motor bearings due to thrusts under such conditions will be avoided if the following procedures are observed by the motor manufacturer and the driven equipment and motor assembler:

A. It is recommended that motors be provided with ball bearings wherever applicable, particularly for the ratings indicated in the following table:

Motor Hp	Synchronous Speed of Motors, Rpm
500 and below	3600, 3000, 1800 and 1500
350 and below	1200 and 1000
250 and below	900 and 750
200 and below	720 and below

Copyright National Electrical Manufacturers Association
Provided by IHS under license with NEMA
No reproduction or networking permitted without license from IHS
Not for Resale

9009279 0003441 727

B. Where motors are provided with sleeve bearings, the motor bearings and limited-end-float coupling should be applied as indicated in the following table:

Motor Hp	Synchronous Speed of Motor, Rpm	Min Motor Rotor End Float, Inch	Max Coupling End Float, Inch
125 to 250, incl.	3600 and 3000	0.25	0.09
300 to 500, incl.	3600 and 3000	0.50	0.19
125 to 500, incl.	1800 and below	0.25	0.09

C. To facilitate the assembly of driven equipment and sleeve and bearing motors on frames 440 and larger, the motor manufacturer should:

1. Indicate on the motor outline drawing the minimum motor rotor end play in inches.
2. Mark rotor end-play limits on motor shaft.

NOTE—The motor and the driven equipment should be assembled and adjusted at the installation site so that there will be some endwise clearance in the motor bearing under all operating conditions. The difference between the rotor end play and the end float in the coupling allows for expansion and contraction in the driven equipment, for clearance in the driven equipment thrust bearing, for endwise movement in the coupling, and for assembly.

Authorized Engineering Information 6-11-1946, revised 11-11-1954; 5-17-1955; 7-15-1970; 11-11-1976.

MG 1-14.38 Output Speeds for Integral-horsepower Gear Motors of Parallel Construction

OUTPUT SPEEDS
(BASED ON ASSUMED OPERATING SPEED OF 1750 RPM)

Nominal Gear Ratios	Output Speeds	Nominal Gear Ratios	Output Speeds
1.225	1430	25.628	68
1.500	1170	31.388	56
1.837	950	38.442	45
2.250	780	47.082	37
2.756	640	57.633	30
3.375	520	70.623	25
4.134	420	86.495	20
5.062	350	105.934	16.5
6.200	280	129.742	13.5
7.594	230	158.900	11.0
9.300	190	194.612	9.0
11.390	155	238.350	7.5
13.950	125	291.917	6.0
17.086	100	357.525	5.0
20.926	84	437.875	4.0

These output speeds are based on an assumed operating speed of 1750 rpm and certain nominal gear ratios and will be modified:

1. By the variation in individual motor speeds from the basic operating speed of 1750 rpm.
   (The same list of output speeds may be applied to 50-hertz gear motors when employing motors of 1500 rpm synchronous speed if an assumed motor operating speed of 1430 rpm is used.)
   (This list of output speeds may be applied to 60-hertz gear motors when employing motors of 1200 rpm synchronous speed if an assumed motor operating speed of 1165 rpm is used.)

2. By a variation in the exact gear ratio from the nominal, which variation will not change the output speed by more than plus or minus 3 percent.

Recommended Standard 2-20-1941, NEMA Standard 11-12-1953, Authorized Engineering Information 11-15-1956.

MG 1-14.41 Application of Integral-horsepower Alternating-current Machines with Encapsulated Windings

A. Integral-horsepower alternating-current machines with encapsulated windings are generally suitable for exposure to the following environmental conditions:

1. High humidity.
2. Water spray and condensation.
3. Detergents and mildly corrosive chemicals.
4. Mildly abrasive nonmagnetic air-borne dust in quantities insufficient to impede proper ventilation or mechanical operation.

B. For environmental conditions other than those listed in par. A, the motor manufacturers should be consulted. Such conditions may include the following:

1. Salt spray.
2. Oils, greases, fats and solvents.
3. Severely abrasive nonmagnetic dusts.
4. Vibration.
5. Occasional submergence in water with the motor not running.

C. The use of machines with encapsulated windings in hazardous areas does not obviate the need for other constructional features dictated by requirements for the areas involved.

NOTE—See par. 1.e in MG 1-12.42 for temperature rating.
Authorized Engineering Information 7-7-1965.

Copyright National Electrical Manufacturers Association
Provided by IHS under license with NEMA
No reproduction or networking permitted without license from IHS
Not for Resale

9009279 0003442 663

MG 1-14.42 Application of V-belt Sheave Dimensions to Alternating-current Motors having Antifriction Bearings ▲

A. Alternating-current motors having antifriction bearings and a continuous time rating with the frame sizes, horsepower and speed ratings listed below are designed to operate with V-belt sheaves within the limited dimensions listed. Selection of V-belt sheave dimensions is made by the V-belt drive vendor and the motor purchaser but, to assure satisfactory motor operation, the selected diameter shall be not smaller than, nor shall the selected width be greater than, the dimensions listed below:

INTEGRAL-HORSEPOWER MOTORS—POLYPHASE INDUCTION*

Frame Number	Horsepower at Synchronous Speed, Rpm				V-belt Sheave			
					Conventional		Narrow	
					A, B, C, D and E (See Note I)		3V, 5V and 8V (See Note II)	
	3600	1800	1200	900	Minimum Pitch Diameter, Inches	Maximum Width, Inches	Minimum Outside Diameter, Inches	Maximum Width, Inches
143T	1½	1	¾	½	2.2		2.2	
145T	2–3	1½–2	1	¾	2.4		2.4	
182T	3	3	1½	1	2.4		2.4	
182T	5	...	...	...	2.6		2.4	
184T	...	...	2	1½	2.4		2.4	
184T	5	...	...	...	2.6		2.4	
184T	7½	5	...	...	3.0		3.0	
213T	7½–10	7½	3	2	3.0		3.0	
215T	10	...	5	3	3.0		3.0	
215T	15	10	...	...	3.8		3.8	
254T	15	...	7½	5	3.8		3.8	
254T	20	15	...	...	4.4		4.4	
256T	20–25	...	10	7½	4.4		4.4	
256T	...	20	...	...	4.6		4.4	
284T	...	...	15	10	4.6		4.4	
284T	...	25	...	...	5.0	See	4.4	See
286T	..	30	20	15	5.4	Note	5.2	Note
324T	...	40	25	20	6.0	III	6.0	IV
326T	...	50	30	25	6.8		6.8	
364T	...	...	40	30	6.8		6.8	
364T	...	60	...	...	7.4		7.4	
365T	...	...	50	40	8.2		8.2	
365T	...	75	...	...	9.0		8.6	
404T	...	...	60	...	9.0		8.0	
404T	...	...	...	50	9.0		8.4	
404T	...	100	...	...	10.0		8.6	
405T	...	...	75	60	10.0		10.0	
405T	...	100	...	...	10.0		8.6	
405T	...	125	...	...	11.5		10.5	
444T	...	...	100	...	11.0		10.0	
444T	...	...	...	75	10.5		9.5	
444T	...	125	...	...	11.0		9.5	
444T	...	150	...	...	...		10.5	
445T	...	...	125	...	12.5		12.0	
445T	...	...	...	100	12.5		12.0	
445T	...	150	...	...	...		10.5	
445T	...	200	...	...	...		13.2	

* For the maximum speed of the drive components, see MG 1-14.07, par. C.

NOTE I—As covered by *Engineering Standards—Specifications for Drives Using Multiple V-Belts (A, B, C, D and E Cross-sections)*†, dated January 1964.

NOTE II—As covered by *Standard Specifications for Drives Using Narrow V-Belts (3V, 5V and 8V Cross-sections)*†, dated July 1964.

NOTE III—The width of the sheave shall be not greater than that required to transmit the indicated horsepower but in no case shall it be wider than 2(N–W)–0.25.

NOTE IV—The width of the sheave shall be not greater than that required to transmit the indicated horsepower but in no case shall it be wider than (N–W).

NOTE V—For the assignment of horsepower and speed ratings to frames, see NEMA Publication No. MG 13.

Suggested Standard for Future Design 7-7-1965, revised 11-11-1965; 11-17-1966, NEMA Standard 11-13-1969; revised 5-12-1975; 11-11-1976; 9-7-1977; 5-15-1978.

(*Continued*)

▲ Revised.

Copyright National Electrical Manufacturers Association
Provided by IHS under license with NEMA
No reproduction or networking permitted without license from IHS
Not for Resale

9009279 0003443 5TT

NOTE VI—The sheave dimensions in the foregoing table are based on the following:

(a) Motor nameplate horsepower and speed.
(b) Belt service factor of 1.6 with belts tightened to belt manufacturers' recommendations.
(c) Speed reduction of 5:1.
(d) Mounting of sheave on motor shaft in accordance with MG 1-14.07.
(e) Center-to-center distance between sheaves approximately equal to the diameter of the larger sheave.
(f) Calculations based upon standards covered by Notes I and II, as applicable.

Authorized Engineering Information 7-7-1965.

†Copies may be obtained from: Mechanical Power Transmission Association and The Rubber Manufacturers Association, Inc.
1717 Howard Street 444 Madison Avenue
Evanston, IL 60201 New York, NY 10022

B. For motors having speeds and ratings other than those given in par. A, the motor manufacturer should be consulted.

Authorized Engineering Information 9-7-1977.

MG 1-14.43 Aseismatic Capability

See MG 1-20.83.

MG 1-14.44 Power Factor of Three-phase, Squirrel-cage, Integral Horsepower Motors with Continuous Ratings▲

A. The approximately full-load power factor can be calculated from published or nameplate data as follows:

$$PF = \frac{431 \times HP}{E \times I \times Eff.}$$

Where:

PF = Per unit power factor at full load.

$$\left(\text{per unit PF} = \frac{\text{Percent PF}}{100}\right)$$

HP = Rated horsepower.

E = Rated voltage.

I = Rated current.

Eff. = Per unit nominal full-load efficiency from published data or as marked on the motor nameplate or associated with the index letter on the nameplate (as listed in MG 1-12.53.b).

$$\left(\text{per unit Eff.} = \frac{\text{percent Eff.}}{100}\right)$$

B. For safety reasons, it is generally better to improve power factor for multiple loads as a part of the plant distribution system. In those cases where local codes or other circumstances require improving the power factor of an individual motor, the KVAR rating of the improvement capacitor can be calculated as follows:

$$KVAR = \frac{.746 \times HP}{Eff.} \times \left(\frac{\sqrt{1-(PF)^2}}{PF} - \frac{\sqrt{1-(PF_i)^2}}{PF_i}\right)$$

Where:

KVAR = Rating of three-phase power factor improvement capacitor.

HP =
Eff. =
PF = } As defined in par. A.

PF_i = Improved per unit power factor for the motor-capacitor combination.

C. In some cases, it may be desirable to determine the resultant power factor, PF_i, where the power factor improvement capacitor selected within the maximum safe value specified by the motor manufacturer is known. The resultant full-load power factor, PF_i, can be calculated from the following:

$$PF_i = \frac{1}{\sqrt{\left(\frac{\sqrt{1-(PF)^2}}{PF} - \frac{KVAR \times EFF}{.746 \times HP}\right)^2 + 1}}$$

WARNING: In no case should power factor improvement capacitors be applied in ratings exceeding the maximum safe value specified by the motor manufacturer. Excessive improvement may cause over excitation resulting in high transient voltages, currents and torques that can increase safety hazards to personnel and cause possible damage to the motor or to the driven equipment.

Authorized Engineering Information 7-13-1977; revised 5-15-1978; 11-12-1981.

MG 1-14.45 Bus Transfer or Reclosing●

See MG 1-20.85.

Authorized Engineering Information 11-12-81.

▲ Revised.

● Added.

Copyright National Electrical Manufacturers Association
Provided by IHS under license with NEMA
No reproduction or networking permitted without license from IHS
Not for Resale

9009279 0003444 436

SECTION II

FRACTIONAL- AND INTEGRAL-HORSEPOWER MACHINES

Part 14. Application Data— DC Motors

The standards in this Part 14 of Section II cover direct-current motors built in frames with continuous dripproof ratings, or equivalent capacities, up to and including 1.25 horsepower per rpm, open type.

Copyright National Electrical Manufacturers Association
Provided by IHS under license with NEMA
No reproduction or networking permitted without license from IHS

Not for Resale

9009279 0003445 372

Part 14

APPLICATION DATA

DC FRACTIONAL- AND INTEGRAL-HORSEPOWER MOTORS

MG 1-14.60 Operation of Fractional-horsepower Motors on Rectified Alternating-current Current

A. General

When direct-current fractional-horsepower motors intended for use on adjustable-voltage electronic power supplies are operated from rectified power sources, the pulsating voltage and current wave forms affect the motor performance characteristics (see MG 1-14.61). Because of this, the motors must be designed or specially selected to suit this type of operation.

A motor may be used with any power supply if the combination results in a form factor at rated load equal to or less than the motor rated form factor.

A combination of a power supply and a motor which results in a form factor at rated load greater than the motor rated form factor will cause overheating of the motor and will have an adverse effect on commutation.

There are many types of power supplies which can be used; some are:

1. Single-phase, half-wave.
2. Single-phase, half-wave, back rectifier.
3. Single-phase, half-wave, alternating-current voltage controlled.
4. Single-phase, full-wave, firing angle controlled.
5. Single-phase, full-wave, firing angle controlled, back rectifier.
6. Three-phase, half-wave, voltage controlled.
7. Three-phase, half-wave, firing angle controlled.

It is impractical to design a motor or to list a standard motor for each type of power supply. The combination of power supply and motor must be considered. The resulting form factor of the combination is a measure of the effect of the rectified voltage on the motor current as it influences the motor performance characteristics, such as commutation and heating.

B. Form Factor

The form factor of the current is the ratio of the root-mean-square value of the current to the average value of the current.

Armature current form factor of a motor-rectifier circuit may be determined by measuring the rms armature current (using an electrothermic instrument*, electrodynamic instrument* or other true rms responding instrument) and the average armature current (using a permanent-magnet moving-coil instrument*). The armature current form factor will vary with changes in load, speed and circuit adjustment.

* These terms are taken from IEEE Std 100, *Dictionary of Electrical and Electronics Terms.*

Armature current form factor of a motor-rectifier circuit may be determined by calculation. For this purpose, the inductance of the motor armature circuit must be known or estimated, including the inductance of any components in the power supply which are in series with the motor armature. The value of the motor inductance will depend upon the horsepower, speed and voltage ratings and the enclosure of the motor and must be obtained from the motor manufacturer. The method of calculation of the armature current form factor must take into account the parameters of the circuit, such as the number of phases, the firing angle, half-wave, with or without back rectifier, etc., and whether or not the current is continuous or discontinuous. Some methods of calculation are described in MG 1-14.62.

Ranges of armature current form factors on some commonly used motor-rectifier circuits and recommended rated form factors of motors associated with these ranges are given in Table 14-1.

Authorized Engineering Information 1-6-1966; revised 7-16-1969; 11-12-1970; 1-25-1972; 5-17-1972.

MG 1-14.61 Operation of Direct-current Integral-horsepower Motors on Rectified Alternating Current

When a direct-current integral-horsepower motor is operated from a rectified alternating-current supply, its performance may differ materially from that of the same motor when operated from a low-ripple direct-current source of supply, such as a generator or a battery. The pulsating voltage and current wave forms may increase temperature rise and noise and adversely affect commutation and efficiency. Because of these effects, it is necessary that direct-current motors be designed or specially selected to operate on the particular type of rectified supply to be used.

Copyright National Electrical Manufacturers Association
Provided by IHS under license with NEMA
No reproduction or networking permitted without license from IHS
Not for Resale

9009279 0003446 209

TABLE 14-1

Typical Combinations of Power Source and Rectifier Type	Range of Armature Current Form Factors*	Recommended Rated Form Factors of Motors
Single-phase thyristor (SCR) or thyratron with or without back rectifiers		
Half-wave	1.86–2	2
Half-wave	1.71–1.85	1.85
Half-wave or full-wave	1.51–1.7	1.7
Full-wave	1.41–1.5	1.5
Full-wave	1.31–1.4	1.4
Full-wave	1.21–1.3	1.3
Three-phase thyristor (SCR) or thyratron with or without back rectifiers		
Half-wave	1.11–1.2	1.2
Full-wave	1.0 –1.1	1.1

* The armature current form factor may be reduced by filters or other circuit means which will allow the use of a motor with a lower rated form factor.

MG 1-10.60 describes the basis of rating direct-current motors intended for use with rectifier power supplies. These ratings are based upon tests of the motors using a test power supply specified in MG 1-12.61 because these power supplies are in common use. It is impractical to design a motor or develop a standard for every type of power supply.

A motor may, under some conditions, be applied to a power supply different from that used for the test power supply as the basis of rating. All direct-current motors intended for use on rectifier power supplies may be used on low-ripple power supplies such as a direct-current generator or a battery.

Because the letters used to identify the power supplies in common use have been chosen in alphabetical order of increasing magnitude of ripple current, a motor rated on the basis of one of these power supplies may be used on any power supply designated by a lower letter of the alphabet. For example, a motor rated on the basis of an "E" power supply may be used on a "C" or "D" power supply.

If it is desired to use a motor on a power supply designated by a higher letter of the alphabet than the one on which it was rated, it may be necessary to add an inductance external to the motor to limit the ripple current to the magnitude implied by the motor rating.

For operation of direct-current motors on power supplies other than those described in MG 1-12.61, the combination of the power supply and the motor should be considered in consultation with the motor manufacturer.

Authorized Engineering Information 6-22-1950, revised 6-28-1951; 5-21-1962; 1-21-1964; 11-17-1966; 1-25-1972; 11-8-1973.

▲ Editorially revised.

MG 1-14.62 Armature Current Ripple ▲

Peak-to-peak armature current ripple is defined as the difference between the maximum value of the current wave form and the minimum value. The peak-to-peak armature current ripple may be expressed as a percent of the average armature current. The peak-to-peak armature current ripple is best measured on an oscilloscope incorporating capability for reading both direct-current and alternating-current values. An alternative method is to use a peak-to-peak-reading voltmeter, reading the voltage drop across a non-inductive resistance in series with the armature circuit.

The rms value of the ripple current cannot be derived from peak-to-peak values with any degree of accuracy because of variations in current wave form, and the converse relationship of deriving peak-to-peak values from rms values is at least equally inaccurate.

Armature current ripple of a motor-rectifier circuit may be estimated by calculation. For this purpose, the inductance of the motor armature circuit must be known or estimated, including the inductance of any components in the power supply which are in series with the motor armature. The value of the motor inductance will depend upon the horsepower, speed and voltage rating and the enclosure of the motor and must be obtained from the motor manufacturer. The method of calculation of the armature current ripple must take into account the parameters of the circuit, such as the number of phases, the firing angle, half-wave, with or without back rectifier, etc., and whether or not the current is continuous or discontinuous. Some methods of calculation are described in the following references:

Copyright National Electrical Manufacturers Association
Provided by IHS under license with NEMA
No reproduction or networking permitted without license from IHS
Not for Resale

9009279 0003447 145

"Characteristics of Phase-controlled Bridge Rectifiers with DC Shunt Motor Load" by R. W. Pfaff, AIEE Paper 58-40, AIEEE Transactions, Vol. 77, Part II, Pages 49-53.*
"The Armature Current Form Factor of a DC Motor Connected to a Controlled Rectifier" by E. F. Kubler, AIEE Paper 59-128, AIEE Transactions, Vol. 78, Part IIIA, Pages 764-770.*

* Copies are available from the Institute of Electrical and Electronics Engineers, 345 East 47th Street, New York, N. Y. 10017.

The armature current ripple may be reduced by filtering or other circuit means. A reduction in the rms armature current ripple reduces the heating of a motor, while a reduction in peak-to-peak armature current ripple improves the commutating ability of the motor.

Authorized Engineering Information 7-13-1967.

MG 1-14.63 Operation Below Base Speed

The temperature rise of motors, when operated at full-load torque and at reduced armature voltage, will vary with the construction, with the enclosure, with the percentage of base speed and with the type of power supply. All self-ventilated and totally-enclosed motors suffer a loss of heat dissipating ability as the speed is reduced below the rated base speed, and this may require that the torque load be reduced to avoid overheating of the motor. In addition to this effect, it is characteristic of some rectifier circuits that the armature current ripple at rated current increases as the armature voltage is reduced, and this may require further load torque reduction. In general, such motors are capable of operation at 67 percent of rated torque at 50 percent of base speed without injurious heating. It is impractical to develop a standard for motors so operated, but derating data can be obtained from the motor manufacturer to determine if the motor will be satisfactory for a particular application.

Authorized Engineering Information 7-13-1967, revised 9-9-1970.

MG 1-14.64 Shunt Field Heating at Standstill

In some applications of direct-current motors, the user may want to apply voltage to the shunt field winding during periods when the motor is stationary and the armature circuit is not energized. The percent of rated shunt field voltage and the duration of standstill excitation which a direct-current motor is capable of withstanding without excessive temperature will vary depending upon the size, enclosure, rating and type of direct-current motor.

Some direct-current motors are designed to be capable of continuous excitation of the shunt field at standstill with rated field voltage applied. Under this condition, the shunt field temperature may exceed rated temperature rise, and prolonged operation under this condition will result in reduced insulation life.

Other direct-current motors require that the excitation voltage applied be reduced below the rated value if prolonged standstill excitation is planned to avoid excessive shunt field temperatures.

The motor manufacturer should be consulted to obtain the heating capability of a particular direct-current motor.

Authorized Engineering Information 12-16-1971.

MG 1-14.65 Bearing Currents

When a direct-current motor is operated from some unfiltered rectifier power supplies, bearing currents may result. Ripple currents, transmitted by capacitive coupling between the rotor winding and the core, may flow through the ground path to the transformer secondary. While these currents are small in magnitude, they may cause damage to either antifriction or sleeve bearings under certain circumstances.

Authorized Engineering Information 1-25-1972.

MG 1-14.66 Effect of 50-hertz Alternating-current Power Frequency

If a direct-current integral-horsepower motor is to be applied to a rectifier system having a 50-hertz input frequency where the test power supply used as the basis of rating has a 60-hertz input frequency, the magnitude of the current ripple may be affected. In general, when other factors are equal, the ripple magnitude will be in approximate inverse ratio of the frequencies. A number of methods exist for compensating for the increase in ripple:

1. Add an external inductance equal to 20 percent of the original armature circuit inductance (including the motor) to obtain the same magnitude of ripple current as is obtained with the test power supply.
2. Utilize a motor designed for use on a 50-hertz test power supply.
3. Derate the horsepower rating of the motor.
4. Select a different power supply such that the current ripple at 50 hertz will not exceed the current ripple of the test power supply.

Data can be obtained from the motor manufacturer to determine if the motor will be satisfactory for a particular application.

Authorized Engineering Information 1-25-1972.

Copyright National Electrical Manufacturers Association
Provided by IHS under license with NEMA
No reproduction or networking permitted without license from IHS
Not for Resale

9009279 0003448 081

MG 1-14.67.a Application of V-belt Sheave Dimensions to Industrial Direct-current Motors

Industrial direct-current motors are designed to operate with V-belt sheaves within the limits listed. Selection of V-belt sheave dimensions is made by the V-belt drive vendor and the motor purchaser but, to assure satisfactory motor operation, the selected pitch diameter shall be not smaller than that calculated from the following formula. The minimum pitch diameter of the sheave is a function of the torque to be transmitted and the location of the center of the sheave face. The following formula and table of constants apply to motors with shaft extensions for belt drive as given in MG 1-11.61.a.

$$d = \frac{hp}{rpm} (A + Bx)$$

where

d = minimum pitch diameter of V-belt sheave in inches.

hp = maximum horsepower to be transmitted (this may exceed motor rating to take care of momentary overloads).

rpm = lowest operating speed at which maximum horsepower occurs.

x = axial distance of sheave centerline from end of motor shaft in inches (x is positive if centerline is beyond the end of the shaft and negative if toward the motor). The formula should not be used for positive values of x greater than one half of the V dimension of the shaft extension.

A and B = constants as tabulated below:

Frame Designation	A	B
162AT–1610AT	1375	375
182AT–1810AT	1000	190
213AT–2110AT	775	125
253AT–259AT	460	35
283AT–289AT	445	15
323AT–329AT	330	15
363AT–369AT	225	10
403AT–409AT	225	5.6
443AT–449AT	180	3.5
502AT–509AT	150	3.2
582AT–589AT	105	2.9
681AT–689AT	95	2.9
583A–588A	115	2.2
683A–688A	90	1.5

For the maximum speed of the drive components, see MG 1-14.07, par. C.

NOTE I—To avoid excessive bearing loads and shaft stresses, belts should not be tightened more than necessary to transmit the torque for which the calculation is made.

NOTE II—The value of "d" calculated in the foregoing formula may indicate a minimum sheave diameter which is smaller than is practicable to assemble on the motor shaft extension.

NOTE III—Shaft stresses and bearing and belt loads will be reduced if sheave diameters larger than the calculated minimum are used.

NOTE IV—The calculated minimum pitch diameter of the V-belt sheave is based upon the following:

1. Belt service factor of 1.6 with belts tightened to the belt manufacturer's recommendations.
2. Speed reduction not exceeding 5:1.
3. Mounting of sheave on motor shaft in accordance with MG 1-14.07.
4. Center-to-center distance between sheaves approximately equal to five times the pitch diameter of the smaller sheave.

Authorized Engineering Information 12-16-1971, revised 5-12-1975.

Copyright National Electrical Manufacturers Association
Provided by IHS under license with NEMA
No reproduction or networking permitted without license from IHS
Not for Resale

9009279 0003449 T18

SECTION II

FRACTIONAL- AND INTEGRAL-HORSEPOWER MACHINES

Part 15. DC Generators

The standards in this Part 15 of Section II cover direct-current generators built in frames with continuous dripproof ratings, or equivalent capacities, rated 3/4 kilowatt at 3600 rpm up to and including generators having a continuous rating of 1.0 kW per rpm, open type.

Copyright National Electrical Manufacturers Association
Provided by IHS under license with NEMA
No reproduction or networking permitted without license from IHS
Not for Resale

9009279 0003450 73T

Part 15

DC GENERATORS

RATINGS

MG 1-15.10 Kilowatt, Speed and Voltage Ratings

A. The kilowatt, speed and voltage ratings of industrial direct-current generators and exciters shall be in accordance with Table 15-1.

B. Kilowatt ratings for direct-connected exciters shall be in accordance with par. A. The speed must necessarily be that of the machine to which the exciter is coupled.

Suggested Standard for Future Design 11-11-1954, revised 11-17-1955; 6-24-1957; 6-1-1959, NEMA Standard 11-12-1959; revised 11-15-1962; 8-20-1966; 7-13-1967; 1-25-1972; 5-15-1978.

TABLE 15-1▲
KILOWATT, SPEED AND VOLTAGE RATINGS

Rating, kW	Speed, Rpm						Rating, Volts
¾	3450	1750	1450	1150	850	...	125 and 250
1	3450	1750	1450	1150	850	...	" "
1½	3450	1750	1450	1150	850	...	" "
2	3450	1750	1450	1150	850	...	" "
3	3450	1750	1450	1150	850	...	" "
4½	3450	1750	1450	1150	850	...	" "
6½	3450	1750	1450	1150	850	...	" "
9	3450	1750	1450	1150	850	...	" "
13	3450	1750	1450	1150	850	...	" "
17	3450	1750	1450	1150	850	...	" "
21	3450	1750	1450	1150	850	...	" "
25	3450	1750	1450	1150	850	...	" "
33	3450	1750	1450	1150	850	...	" "
40	3450	1750	1450	1150	850	...	" "
50	3450	1750	1450	1150	850	...	" "
65	...	1750	1450	1150	850	...	250
85	...	1750	1450	1150	850	...	"
100	...	1750	1450	1150	850	...	"
125	...	1750	1450	1150	850	...	"
170	...	1750	1450	1150	850	...	"
200	...	1750	1450	1150	850	720	250 and 500
240	...	1750	1450	1150	850	720	" "
320	...	...	1450	1150	850	720	" "
400	...	...	...	1150	850	720	" "
480	...	...	...	...	...	720	500
560	...	...	...	...	850	720	"
640	...	...	...	...	850	720	"
720	...	...	...	...	850	720	"
800*	...	...	...	1150	850	...	"

* For this rating, the voltage rating is 500 volts.

▲ Revised.

Copyright National Electrical Manufacturers Association
Provided by IHS under license with NEMA
No reproduction or networking permitted without license from IHS
Not for Resale

9009279 0003451 676

MG 1-15.11 Nameplate Time, Rating, Maximum Ambient Temperature, and Insulation System Class ▲

Industrial direct-current generators shall have a continuous time rating.

Industrial direct-current generators shall be rated on the basis of a maximum ambient temperature and the insulation system class. The rated value of the maximum ambient temperature shall be 40 °C unless otherwise specified, and the insulation system shall be Class A, B, F or H. All such ratings are based upon a load test with temperature rise values not exceeding those shown for the designated class of insulation system in MG 1-15.41. Ratings of direct-current generators for any other value of maximum ambient temperature shall be based on temperature rise values calculated in accordance with MG 1-12.62.

Suggested Standard for Future Design 11-17-1955, revised 6-24-1957, NEMA Standard 11-12-1959; 1-21-1964; 1-25-1972; 9-17-1981.

MG 1-15.12 Nameplate Marking

The following minimun amount of information shall be given on all nameplates. For abbreviations, see MG 1-1.80.

1. Manufacturer's type designation and frame number.
2. Kilowatt output.
3. Time rating (see MG 1-15.11).
4. Maximum ambient temperature for which the generator is designed (see Note I of MG 1-15.41).*
5. Insulation system designation. (If field and armature use different classes of insulation systems, both insulation systems shall be given, that for the field being given first.)*
6. Rated speed in rpm.
7. Rated load voltage.
8. Rated field voltage when different from rated armature voltage.†
9. Rated current in amperes.
10. Winding—series, shunt or compound.

* As an alternative, these items may be replaced by a single item reading "Temperature rise for rated continuous load."

† As an alternative, this item may be replaced by the following:
1. Field resistance in ohms at 25 °C.
2. Rated field current in amperes at rated load and speed.

NOTE—Item I shall be optional.

NEMA Standard 10-29-1943, revised 11-12-1953; 11-21-1968; 1-25-1972; 11-8-1973.

TESTS AND PERFORMANCE

MG 1-15.40 Test Methods

Tests to determine performance characteristics shall be made in accordance with IEEE Std 113, *Test Code for Direct-current Machines.*

NEMA Standard 11-12-1964.

▲ Revised.

Copyright National Electrical Manufacturers Association
Provided by IHS under license with NEMA
No reproduction or networking permitted without license from IHS
Not for Resale

Copyright National Electrical Manufacturers Association
Provided by IHS under license with NEMA
No reproduction or networking permitted without license from IHS

MG 1-15.41 Temperature Rise of Direct-current Generators ▲

The temperature rise, above the temperature of the cooling medium, for each of the various parts of direct-current generators, when tested in accordance with the rating, shall not exceed the values given in the following table:

	Totally-enclosed Nonventilated and Totally-enclosed Fan-cooled Generators, Including Variations Thereof				Generators with All Other Enclosures			
CLASS OF INSULATION SYSTEM (See MG 1-1.65)	A	B	F	H	A	B	F	H
TIME RATING	Continuous				Continuous			
TEMPERATURE RISE, DEGREES C								
1. ARMATURE WINDINGS AND ALL OTHER WINDINGS OTHER THAN THOSE GIVEN IN PAR. 2 AND 3								
Resistance	70	100	130	155	70	100	130	155
2. MULTI-LAYER FIELD WINDINGS								
Resistance	70	100	130	155	70	100	130	155
3. SINGLE-LAYER FIELD WINDINGS WITH EXPOSED UNINSULATED SURFACES AND BARE COPPER WINDINGS								
Resistance	70	100	130	155	70	100	130	155
4. The temperature attained by cores, commutators, and miscellaneous parts (such as brushholders, brushes, pole tips, etc.) shall not injure the insulation or the machine in any respect.								

NOTE I—All temperature rises are based on a maximum ambient temperature of 40°C. Abnormal deterioration of insulation may be expected if this ambient temperature is exceeded in regular operation.
NOTE II—Temperatures shall be determined in accordance with the latest revision of IEEE Std 113, *Test Code for Direct-current Machines.*
NOTE III—The foregoing values of temperature rise are based upon operation at altitudes of 3300 feet (1000 meters) or less. For temperature rises for generators intended for operation at altitudes above 3300 feet (1000 meters), see MG 1-4.04.

Suggested Standard for Future Design 11-17-1955, revised 6-24-1957, NEMA Standard 11-12-1959, revised 1-21-1964; 11-12-1964; 11-11-1965; 1-25-1972; 11-8-1973; 9-17-1981.

▲ Revised.

9009279 0003452 502
Not for Resale

9009279 0003453 449

MG 1-15.42 Successful Commutation

See MG 1-12.68.

Suggested Standard for Future Design 11-17-1955, NEMA Standard 11-12-1959, revised 11-11-1965.

MG 1-15.43 Overload

The generators shall be capable of carrying for 1 minute, with successful commutation as defined in MG 1-15.42, loads of 150 percent of the continuous-rated amperes, with rheostat set for rated-load excitation. No temperature limit applies at this overload.

Suggested Standard for Future Design 11-17-1955, NEMA Standard 11-12-1959.

MG 1-15.44 Voltage Variation Due to Heating

For flat-compound-wound dripproof direct-current generators rated 50 kilowatts and smaller and employing a Class B insulation system, the voltage at rated load, with the windings at ambient temperature within the usual service range, shall not exceed 112 percent of the voltage at rated load with the windings at the constant temperature attained when the generator is operating continuously at its rating and with the field rheostat set to obtain rated voltage at rated load.

NEMA Standard 5-21-1962, revised 1-25-1972; 11-8-1973.

MG 1-15.45 Flat Compounding

Flat-compounded generators shall have windings which will give approximately the same voltage at no load as at full load when operated at rated speed at a temperature equivalent to that which would be attained after a continuous run at rated load, and with the field rheostat set to obtain rated voltage at rated load and left unchanged.

Suggested Standard for Future Design 11-17-1955, NEMA Standard 11-12-1959, revised 11-11-1965; 7-14-1971.

MG 1-15.46 Test for Regulation

Combined regulation shall be measured in accordance with the latest revision of IEEE Std 113, *Test Code for Direct-current Machines.*

Suggested Standard for Future Design 11-17-1955, NEMA Standard 11-12-1959, revised 11-11-1965.

MG 1-15.47 Overspeeds for Generators

Direct-current generators shall be so constructed that, in an emergency, they will withstand without mechanical injury an overspeed of 25 percent above rated speed.

Suggested Standard for Future Design 11-17-1955, NEMA Standard 11-12-1959, revised 11-11-1965.

MG 1-15.48 High-potential Test

A. SAFETY PRECAUTIONS AND TEST PROCEDURE

See MG 1-3.01.

B. TEST VOLTAGE

The effective value of the high-potential test voltages for direct-current generators shall be:

1. Generators of 250 watts output or more—1000 volts plus twice the rated voltage* of the generator.
2. Generators of less than 250 watts output having rated voltages not exceeding 250 volts—1000 volts. (Generators rated above 250 volts shall be tested in accordance with item 1.)
   EXCEPTION—Armature or field windings for connections to circuits of 35 volts or less shall be tested with 500 volts.

* Where the voltage rating of a separately excited field of a generator is not stated, it shall be assumed to be 1.5 times the field resistance in ohms at 25 °C times the rated field current.

NEMA Standard 1-25-1972; revised 1-5-1977.

MG 1-15.50 Routine Tests

Typical tests which may be made on direct-current generators are listed below. All tests should be made in accordance with IEEE Std 113, *Test Code for Direct-current Machines.*

A. Full-load readings at rated voltage.

B. No-load readings with rheostat set as in par. A.

C. High-potential test in accordance with MG 1-15.48.

NOTE—The word "readings" in the foregoing paragraphs includes the following:
1. Speed in revolutions per minute.
2. Voltage at generator terminals.
3. Amperes in armature.
4. Amperes in shunt field.

Suggested Standard for Future Design 11-17-1955, NEMA Standard 11-12-1959, Authorized Engineering Information 8-19-1964.

Copyright National Electrical Manufacturers Association
Provided by IHS under license with NEMA
No reproduction or networking permitted without license from IHS
Not for Resale

9009279 0003454 385

MG 1-15.51 Field Data for Direct-current Generators

The following field data for direct-current generators may be used in supplying data to control manufacturers.

1. Manufacturer's name.
2. Requisition or order number.
3. Frame designation.
4. Serial number.
5. kW output.
6. Shunt or compound-wound.
7. Rated speed in rpm.
8. Rated voltage.
9. Rated current.
10. Excitation voltage, or self excited.
11. Resistance of shunt field at 25°C.
12. Recommended value of resistance for rheostat for hand or regulator control.
13. N. L. saturation.

	Percent Rated Armature Voltage	Field Current, Amperes
Max. field rheostat out		
	100	
	50	
Shunt field current at rated voltage and load		

Suggested Standard for Future Design 11-17-1955, NEMA Standard 11-12-1959, Authorized Engineering Information 11-11-1965.

MG 1-15.52 Report of Test Form

For typical test forms, see IEEE Std 113, *Test Code for Direct-current Machines.*

Suggested Standard for Future Design 11-17-1955, NEMA Standard 11-12-1959, Authorized Engineering Information 11-12-1964.

MG 1-15.53 Efficiency

Efficiency and losses shall be determined in accordance with IEEE Std 113, *Test Code for Direct-current Machines,* using the direct measurement method or the segregated losses method. The efficiency shall be determined at rated output, voltage and speed.

The following losses shall be included in determining the efficiency:

1. I^2R loss of armature.
2. I^2R loss of series windings (including commutating, compounding and compensating fields, where applicable).
3. I^2R loss of shunt field.*
4. Core loss.
5. Stray load loss.
6. Brush contact loss.
7. Brush friction loss.
8. Exciter loss if exciter is supplied with and driven from the shaft of the machine.
9. Ventilating losses.
10. Friction and windage loss.†

* For separately excited generators, the shunt field I^2R loss may be omitted from the efficiency calculation if so stated.

† In the case of generators furnished with thrust bearings, only that portion of the thrust bearing loss produced by the generator itself shall be included in the efficiency calculations. Alternatively, a calculated value of efficiency, including bearing loss due to external thrust load, may be specified.

In the case of generators furnished with less than a full set of bearings, friction and windage losses which are representative of the actual installation shall be determined by (1) calculation or (2) experience with shop test bearings and shall be included in the efficiency calculations.

In determining I^2R losses, the resistance of each winding shall be corrected to a temperature equal to an ambient temperature of 25°C plus the observed rated load temperature rise measured by resistance. Where the rated load temperature rise has not been measured, the resistance of the winding shall be corrected to the following temperature:

Class of Insulation System‡	Temperature, Degrees C
A	85
B	110
F	135
H	155

‡ Where the rated temperature rise is that of a lower class of insulation system, the temperature used for resistance correction shall be that of the lower insulation class.

NEMA Standard 5-14-1973.

MANUFACTURING

MG 1-15.60 Direction of Rotation

See MG 1-14.06.

MG 1-15.61 Equalizer Leads of Direct-current Generators

Between any two compound-wound generators, the equalizer connection circuit shall have a resistance not exceeding 20 percent of the resistance of the series field circuit of the smaller generator. However, lower values of resistance are desirable.

Authorized Engineering Information 1-26-1948.

Copyright National Electrical Manufacturers Association
Provided by IHS under license with NEMA
No reproduction or networking permitted without license from IHS
Not for Resale

9009279 0003455 211

SECTION II

FRACTIONAL- AND INTEGRAL-HORSEPOWER MACHINES

Part 16. Synchronous Integral-horsepower Motors and Generators

The standards in this Part 16 of Section II cover alternating-current motors and generators up to and including the ratings built in frames corresponding to the continuous open-type ratings given in the table below:

Synchronous Speed	Motors, Synchronous, Hp — Power Factor		Generators, Synchronous, Revolving Field Type, kW at 0.8 Power Factor
	Unity	0.8	
3600	200	150	...
1800	200	150	150
1200	200	150	150
900	150	125	100
720	125	100	100
600	100	75	75
514	75	60	60

Copyright National Electrical Manufacturers Association
Provided by IHS under license with NEMA
No reproduction or networking permitted without license from IHS
Not for Resale

9009279 0003456 158

Part 16
SYNCHRONOUS GENERATORS - GENERAL PURPOSE

MG 1-16.01 Definition

A general purpose synchronous generator is a continuous duty synchronous generator which incorporates all of the following and is designed with operating characteristics for general use under usual service conditions.

1. Has a kilovoltampere and speed rating as given in MG 1-16.11.
2. Has a voltage rating in accordance with MG 1-16.12.
3. Has an overload rating in accordance with MG 1-16.41.
4. Has a frequency rating of 60 Hertz.
5. Is of open construction.

Suggested Standard for Future Design 11-12-1981.

RATINGS

MG 1-16.10 Basis of Rating

General purpose synchronous generators shall have a prime power rating on a continuous duty basis, and the rating shall be expressed in kilovoltamperes available at the terminals at 0.8 power factor lagging (overexcited). The corresponding kilowatts shall also be stated.

Suggested Standard for Future Design 11-12-1981.

General purpose synchronous generators may have a standby continuous rating in accordance with MG 1-16.84.

Authorized Engineering Information 11-12-1981.

MG 1-16.11 Kilovoltampere (kilowatt) and Speed Rating

Kilovoltampere and Speed Ratings at 60 Hertz shall be:

KVA	(KW)	RPM		
6.25	5	1800	1200	...
9.4	7.5	1800	1200	...
12.5	10	1800	1200	...
18.7	15	1800	1200	...
25	20	1800	1200	...
31.3	25	1800	1200	...
37.5	30	1800	1200	...
50	40	1800	1200	...
62.5	50	1800	1200	900
75	60	1800	1200	900
93.8	75	1800	1200	900
125	100	1800	1200	900
156	125	1800	1200	900
187	150	1800	1200	900
219	175	1800	1200	900
250	200	1800	1200	900
312	250	1800	1200	900
375	300	1800	1200	...
438	350	1800	1200	...
500	400	1800	...	...

Suggested Standard for Future Design 11-12-1981.

MG 1-16.12 Voltage Rating

These voltage ratings shall apply to 60 Hertz circuits only. For variation from rated voltage, see MG 1-16.47.

a) Broad Range
Voltage Ratings, Volts
Three Phase

$$\frac{208}{416} - \frac{240}{480}$$

b) Discrete Ratings
Voltage Ratings, Volts

Three Phase	Single Phase
208Y/120	120
240	120/240
480	240
480Y/277	
240/480	
600	
2400	
4160Y/2400	

Suggested Standard for Future Design 11-12-1981.

NOTE—It is not practical to build synchronous generators of all kVA ratings for all of these voltage ratings.

Authorized Engineering Information 11-12-1981.

Copyright National Electrical Manufacturers Association
Provided by IHS under license with NEMA
No reproduction or networking permitted without license from IHS
Not for Resale

9009279 0003457 094

TESTS AND PERFORMANCE

MG 1-16.40 Temperature Rise

The temperature rise, above the temperature of the cooling medium, for each of the various parts of the generator shall not exceed the values given in the following table when tested in accordance with the rating:

Class of Insulation System (See MG 1-1.65)	A	B	F*	H*
Time Rating - Continuous				
Temperature Rise (based on a maximum ambient temperature of 40 °C)				
1. Armature windings - resistance	60 °C	80 °C	105 °C	125 °C
2. Field Windings - resistance	60 °C	80 °C	105 °C	125 °C
3. The temperature rise attained by cores, amortisseur windings, collector rings and miscellaneous parts, such as brushholders, brushes, etc. shall not injure the insulation or the machine in any respect.				

Temperature shall be determined in accordance with IEEE Std. 115, *Test Procedure for Synchronous Machines.* [1]

Suggested Standard for Future Design 11-12-1981.

• Where a Class F or H insulation system is used, special consideration should be given to bearing temperatures, lubrication, etc.

NOTE—The foregoing values of temperature rise are based upon operation at altitudes of 3300 feet (1000 meters) or less. For temperature rises for generators intended for operation at altitudes above 3300 feet, (1000 meters), see MG 1-14.04.

NOTE II—The temperature rises given in the above table are based upon a reference ambient temperature of 40 °C. Generators intended for use in any other ambient temperature should have temperature rises not exceeding the value calculated from the formula below, rounded off the nearest 5 degrees:

$$\text{temperature rise} - 0.9\,(T_c - T_a)$$

where
T_a = ambient temperature
T_C = 105 °C for Class A insulation system
130 °C for Class B insulation system
155 °C for Class F insulation system
180 °C for Class H insulation system

When a higher ambient temperature than 40 °C is required, recommended values of ambient temperature are 50 °C, 65 °C, 90 °C, and 115 °C.

NOTE III—Temperature rises in the above table are based upon generators rated on a prime power continuous duty basis. Synchronous generators may be rated on a standby duty basis (see MG 1-16.84). In such cases, it is recommended that temperature rises not exceed those in the foregoing table by more than 25 °C under continuous operation at the standby rating.

Authorized Engineering Information 11-12-1981.

MG 1-16.41 Overload Capability

General purpose prime power rated synchronous generators and their exciters (if provided) shall be suitable for operation at a generator overload of 10 percent for 2 hours out of any consecutive 24 hours of operation.

Suggested Standard for Future Design 11-12-1981.

When operated at any load greater than rated load the temperature rise will increase and may exceed the temperature rises specified in MG 1-16.40.

Authorized Engineering Information 11-12-1981.

MG 1-16.42 Maximum Deviation Factor

The deviation factor of the open-circuit line-to-line terminal voltage shall not exceed 0.1.

Suggested Standard for Future Design 11-12-1981.

MG 1-16.43 Telephone Influence Factor

When telephone influence factor is specified, the balanced telephone influence factor (TIF) shall not exceed the following values. See MG 1-22.43 for definition and test method.

1 See Referenced Standards, page vi.

Copyright National Electrical Manufacturers Association
Provided by IHS under license with NEMA
No reproduction or networking permitted without license from IHS
Not for Resale

KVA Rating of Generator	TIF
6.25 to 62	250
62.5 to 500	150

Suggested Standard for Future Design 11-12-1981.

MG 1-16.44 Efficiency

Efficiency and losses shall be determined in accordance with IEEE Std. 115 *Test Procedure for Synchronous Machines.* [1] The efficiency shall be determined at rated output, voltage, frequency, power factor, and balanced load conditions.

The following losses shall be included in determining the efficiency:

1. I^2R loss of armature.
2. I^2R loss of field.
3. Core loss.
4. Stray load loss.
5. Friction and windage loss.
6. Exciter loss if provided.

In determining I^2R losses, the resistance of the windings shall be corrected to the following temperature:

Class of Insulation System	Temperature Degrees C
A	75
B	95
F	115
H	130

Where the rated temperature rise is that of a lower class of insulation system, the temperature for resistance correction shall conform to the lower class.

In the case of a generator furnished with less than a full set of bearings, friction and windage losses which are representative of the actual installation shall be included as determined by (1) calculation or (2) experience with shop test bearings.

Suggested Standard for Future Design 11-12-1981.

MG 1-16.45 Short Circuit Capabilities

General purpose synchronous generators and their exciters (if provided) shall be capable of withstanding a three-phase short circuit at the generator terminals when operating initially at rated kilovoltamperes and power factor at 5 percent overvoltage on discrete voltage generators and within the broad range voltage on broad range voltage rated generators provided that the symmetrical positive phase sequence current (I), expressed in per unit of stator current at rated kVA, and the duration of the fault in seconds, t, are limited to values which give an integrated product, $(I)^2t$, equal to or less than 90.

The generator and exciter shall also be capable of withstanding any other short circuit at the generator terminals of 30 seconds or less, provided:

1. The machine phase currents under fault conditions are such that the negative phase sequence current, (I_2), expressed in per unit of stator current at rated kVA, and the duration of the fault in seconds, t, are limited to values which give an integrated product, $(I_2)^2t$, equal to or less than 40; and

2. The maximum phase current is limited by external means to a value which does not exceed the maximum phase current obtained from the 3-phase fault.

Suggested Standard for Future Design 11-12-1981.

MG 1-16.46 Overspeeds

General purpose synchronous generators and their exciters (if provided) shall be so constructed that, in an emergency they will withstand an overspeed of 25 percent.

Suggested Standard for Future Design 11-12-1981.

MG 1-16.47 Variation from Rated Voltage

A. BROAD RANGE

Synchronous generators shall be capable of delivering rated output (kVA) at rated frequency and power factor, at any voltage within the broad range (see MG 1-16.12a) in accordance with the standards of performance established in this Part 16.

B. DISCRETE RATINGS

Synchronous generators shall be capable of delivering rated output (kVA) at rated frequency and power factor, at any voltage not more than 5 percent above or below rated voltage but not necessarily in accordance with the standards of performance established for operation at rated voltage (see MG 1-16.12b).

Suggested Standard for Future Design 11-12-1981.

[1] See Referenced Standards page vi.

Copyright National Electrical Manufacturers Association
Provided by IHS under license with NEMA
No reproduction or networking permitted without license from IHS
Not for Resale

MG 1-16.48 Synchronous Generator Transient Voltage Regulation (Voltage Dip)●

Transient voltage regulation (voltage dip) is defined as the maximum voltage deviation or excursion that occurs as the result of a sudden load change. It is a function of the magnitude, power factor, and rate of change of the applied load in addition to any initial load. Transient voltage regulation is a system performance criteria involving the generator, exciter, regulator, and prime mover and cannot be established based on generator data alone.

When requested, the generator manufacturer should furnish expected transient voltage regulation assuming either of the following criteria applies:

A. Generator, exciter, and regulator furnished as integrated package by the generator manufacturer, or

B. Complete data defining the transient performance of the regulator (and exciter if applicable) is made available to the generator manufacturer.

When furnishing expected transient voltage regulation, it is recommended the following conditions be assumed unless otherwise specified:

1. Constant speed(rated)
2. Generator, exciter, regulator initially operating at no load, rated voltage
3. Application of a constant impedance linear load as specified
4. Voltage recorder with a response time of one (1) millisecond or less.

Authorized Engineering Information 7-12-1983.

● Added.

Copyright National Electrical Manufacturers Association
Provided by IHS under license with NEMA
No reproduction or networking permitted without license from IHS

Not for Resale

9009279 0003460 689

MG 1-16.49 Performance Specification Forms

Slip-ring Synchronous Generators

The specification form for listing performance data on synchronous generators with slip rings shall be as follows:

Date_____.

SLIP-RING SYNCHRONOUS GENERATOR RATING

kVA	Power Factor	kW	rpm	Number of Poles	Phase	Hertz	Volts	Amperes	Frame

Description:

Is amortisseur winding included? _____

kVA	Power Factor	Temperature Rise (Degrees C) Not to Exceed		Excitation Requirements (Maximum)	
		Armature Winding	Field Winding		
		Resistance	Resistance	kW	Exciter Rated Voltage

Rating and temperature rise are based on cooling air not exceeding 40°C and altitude not exceeding 3300 feet (1000 meters). High-potential tests in accordance with standards of the American National Standards Institute (ANSI C50.10). The rotor of the generator and the armature of the direct-connected exciter, when used, will stand an overspeed of_____percent without mechanical injury.

Minimum Efficiencies							
kVA	Power Factor	kW		Full Load	¾ Load	½ Load	

Efficiencies are determined by including I^2R losses of armature and field windings at_____°C, core losses, stray load losses, and friction and windage losses*. Exciter loss is included if supplied with and driven from shaft of machine. Field rheostat losses are not included.

* In the case of a generator furnished with less than a full set of bearings, friction and windage losses representative of the actual installation are included as determined by (a) calculation or (b) experience with shop test bearings.

Approximate Data	
Wk^2 of the Generator	Pr Synchronizing Power per Electrical Radian

Approximate Weight, Pounds

Suggested Standard for Future Design 11-12-1981.

Copyright National Electrical Manufacturers Association
Provided by IHS under license with NEMA
No reproduction or networking permitted without license from IHS
Not for Resale

9009279 0003461 515

Brushless Synchronous Generators

The specification form for listing performance data on brushless synchronous generators shall be as follows:

Date_____.

BRUSHLESS SYNCHRONOUS GENERATOR RATING

kVA	Power Factor	kW	rpm	Number of Poles	Phase	Hertz	Volts	Amperes	Frame

Description:

Is amortisseur winding included?_____

kVA	Power Factor	Temperature Rise (Degrees C) Not to Exceed			Excitation Requirements* (2) (Maximum)	
			Armature Windings	Field Windings		
			Resistance	Resistance	Watts	Exciter Rated Field Voltage
		Generator				
		Exciter* (1)				

* For rotating transformer give (1) data for equivalent winding temperatures and (2) input kVA and voltage instead of excitation for exciter.

Rating and temperature rise are based on cooling air not exceeding 40°C and altitude not exceeding 3300 feet (1000 meters). High-potential tests in accordance with standards of the American National Standards Institute (ANSI C50.10). The rotor of the generator and the armature of the direct-connected exciter, when used, will stand an overspeed of_____percent without mechanical injury.

Minimum Efficiencies							
kVA	Power Factor	kW		Full Load	¾ Load	½ Load	

Efficiencies are determined by including I^2R losses of generator and exciter armature and field windings at_____°C, generator and exciter core losses, stray load losses, and friction and windage losses†. Field rheostat losses are not included. When furnished with rotating transformer, replace exciter losses with equivalent transformer losses.

† In the case of a generator furnished with less than a full set of bearings, friction and windage losses representative of the actual installation are included as determined by (a) calculation or (b) experience with shop test bearings.

Approximate Data	
Wk^2 of the Generator	Pr Synchronizing Power per Electrical Radian

Approximate Weight, Pounds

Suggested Standard for Future Design 11-12-1981.

Copyright National Electrical Manufacturers Association
Provided by IHS under license with NEMA
No reproduction or networking permitted without license from IHS
Not for Resale

9009279 0003462 451

MG 1-16.50 Routine Factory Tests

The following tests shall be made on generators and their exciters (if provided).

1. Resistance of armature and field windings.
*2. For a completely assembled generator with a brushless exciter, check exciter field current at no load with normal voltage and frequency on the generator. (For a partially assembled generator, test for polarity of field coils).
3. High potential test in accordance with MG 1-16.51.

* If brushless exciter is not provided, check generator field current at no load with normal voltage and frequency on the generator.

Suggested Standard for Future Design 11-12-1981.

MG 1-16.51 High-potential Tests

A. SAFETY PRECAUTIONS AND TEST PROCEDURES

See MG 1-3.01.

B. TEST VOLTAGE-ARMATURE WINDINGS

The test voltage for all generators (with the exception of those described in par. F) shall be an alternating voltage whose effective value is 1000 volts plus twice the rated voltage of the machine.

C. TEST VOLTAGE-FIELD WINDINGS, GENERATORS WITH SLIP RINGS

The test voltage for all generators with slip rings (with the exception of those described in par. F) shall be an alternating voltage whose effective value is 10 times the rated excitation voltage but in no case less than 1500 volts.

D. TEST VOLTAGE-ASSEMBLED BRUSHLESS GENERATOR FIELD WINDING AND EXCITER ARMATURE WINDING

The test voltage for all assembled brushless generator field windings and exciter armature windings (with the exception of those described in par. F) shall be an alternating voltage whose effective value is as follows:

1. Rated excitation voltage $\leq$ 350 volts dc; 10 times the rated excitation voltage but in no case less than 1500 volts.
2. Rated excitation voltage > 350 volts dc; 2800 volts plus twice the rated excitation voltage.

The brushless circuit component (diodes, thyristors, etc.) on an assembled brushless exciter and synchronous machine field winding shall be short-circuited (not grounded) during test.

E. TEST VOLTAGE-BRUSHLESS EXCITER FIELD WINDING

The test voltage for all brushless exciter field windings (with the exception of those described in par. F) shall be an alternating voltage whose effective value is as follows:

1. Rated excitation voltage $\leq$ 350 volts dc; 10 times the rated excitation voltage but in no case less than 1500 volts.
2. Rated excitation voltage > 350 volts dc; 2800 volts plus twice the rated excitation voltage.
3. Exciters with ac excited stators (fields) shall be tested at 1000 volts plus twice the ac rated voltage of the stator.

F. EXCEPTIONS TO TEST VOLTAGES GIVEN IN PAR. B, C, D, AND E

For generators whose armature or field windings are for connection to circuits of 35 volts or less, the test voltage for such a winding shall be an alternating voltage whose effective value is 500 volts.

Suggested Standard for Future Design 11-12-1981.

MG 1-16.52 Balance of Machines

The balance for synchronous generators covered by this Part 16, when measured in accordance with MG 1-12.06, shall not exceed the following:

Speed, RPM	Amplitude, Inches Peak to Peak
1500 - 2999, incl.	.002
1000 - 1499, incl.	.0025
999 and below	.003

Suggested Standard for Future Design 11-12-1981.

Copyright National Electrical Manufacturers Association
Provided by IHS under license with NEMA
No reproduction or networking permitted without license from IHS
Not for Resale

9009279 0003463 398

MANUFACTURING

MG 1-16.61 Nameplate Marking

The following minimum amount of information shall be given nameplates. For abbreviations, see MG 1-1.80.

1. Manufacturer's name, serial number or other suitable identification.
2. Kilovoltampere output.
3. Kilowatt output.
4. Power Factor.
5. Rating (prime or standby).
6. Maximum ambient temperature for which the generator is designed (see MG 1-16.40, Note II).*
7. Insulation system designation (if armature and field use different classes of insulation systems, both insulation systems, shall be given, that for the armature being given first).*
8. Rated speed in rpm.
9. Voltage.
10. Rated current in amperes per terminal.
11. Number of phases.
12. Frequency.
13. Rated exciter field current and exciter field voltage or generator field current and generator field voltge if exciter is not provided.

* As an alternate to these two items, the temperature rise by resistance as shown in MG 1-16.40 shall be given.

Suggested Standard for Future Design 11-12-1981.

MG 1-16.62 Tolerance Limits in Dimensions

The dimensions from the shaft center to the bottom of the feet shall be not greater than the nominal dimensions shown on the manufacturer's dimensional sheet.

Suggested Standard for Future Design 11-12-1981.

When the generator is coupled or geared to the driven machines, shims are usually required to secure accurate alignment.

Authorized Engineering Information 11-12-1981.

APPLICATION DATA

MG 1-16.80 Parallel Operation

Many of the factors which affect the parallel operation of generators are contained in the prime mover, and the characteristics of the equipment connected to the system with which the generator is to operate in parallel also impose conditions which should be taken into account in parallel operation.

When requested, the generator manufacturer should furnish the following, and any other information as may be required, in determining the system requirements for successful parallel operation:

1. Synchronizing torque coefficient P_r. Unless otherwise specified the value of P_r should correspond to a pulsation frequency of one-half the rpm (see MG 1-21.86).
2. Wk^2 of the generator rotor.

Authorized Engineering Information 11-12-1981.

MG 1-16.81 Calculation of Natural Frequency

See MG 1-21.86.

Authorized Engineering Information 11-12-1981.

MG 1-16.82 Torsional Vibration

Excessive torsional vibration may result in overstressed shafts, couplings, and other rotating parts. Torsional vibration is difficult to determine and measure, and it is recommended that torsional stresses be investigated when generators are to be driven by prime movers producing periodic torque pulsations.

While the factors which affect torsional vibration are primarily contained in the design of the prime mover, the design of the generator rotor should also be considered. When requested, the generator manufacturer should furnish the Wk^2 and weight of the generator rotor, and any other information such as the stiffness of the spider, as may be required to make a successful design of the combined unit.

Authorized Engineering Information 11-12-1981.

MG 1-16.83 Service Conditions

A. GENERAL

Generators should be properly selected with respect to their service conditions, usual or unusual, both of which involve the environmental

Copyright National Electrical Manufacturers Association
Provided by IHS under license with NEMA
No reproduction or networking permitted without license from IHS
Not for Resale

9009279 0003464 224

conditions to which the machine is subjected and the operating conditions. Machines conforming to Part 16 of this publication are designed for operation in accordance with their ratings under usual service conditions. Some machines may also be capable of operating in accordance with their ratings under unusual service conditions.

Definite-purpose or special-purpose machines may be required for some unusual conditions.

Service conditions, other than those specified as usual, may involve some degree of hazard. The additional hazard depends upon the degree of the severity of the environment to which the machine is exposed.

The additional hazard results from such things as overheating, mechanical failure, abnormal deterioration of the insulation system, corrosion, fire and explosion.

Although past experience of the user may often be the best guide, the manufacturer of the driving equipment and the generator manufacturer should be consulted for further information regarding any unusual service conditions which increase the mechanical or thermal duty on the machine and as a result, increase the changes for failure and consequent hazard. This further information should be considered by the user, consultants, or others most familiar with the details of the application involved when making the final decision.

Authorized Engineering Information 11-12-1981.

B. USUAL SERVICE CONDITIONS

1. An ambient temperature not less than 0 °C nor more than 40 °C.
2. An altitude not exceeding 3300 feet (1000 meters).
3. A location or supplementary enclosure, if any, such that there is not serious interference with the ventilation of the generator.
4. Installation on a rigid mounting surface.
5. A vibration limit not exceeding .005 inches in any plane on the generator when driven by the prime mover over the operating range.

C. UNUSUAL SERVICE CONDITIONS

The manufacturer should be consulted if any unusual service conditions exist which may affect the construction or operation of the generator. Among such conditions are:

1. Exposure to:
   a. Combustible, explosive, abrasive, or conducting dusts.
   b. Lint or very dirty operating conditions where the accumulation of dirt will interfere with normal ventilation.
   c. Chemical fumes, flammable or explosive gases.
   d. Nuclear radiation.
   e. Steam, salt-laden air, or oil vapor.
   f. Damp or very dry locations, radiant heat, vermin infestation, or atmospheres conducive to the growth of fungus.
   g. Abnormal shock or vibration from external sources.
   h. Abnormal axial or side thrust imposed on the generator shaft.
2. Operation where:
   a. There is excessive departure from rated voltage (see MG 1-16.47).
   b. Low noise levels are required.
   c. Generator neutral will be solidly grounded.
3. Operation at speeds other than rated speed.
4. Operation in a poorly ventilated room, in a pit, or in an inclined position exceeding 10° from horizontal.
5. Operation where subjected to:
   a. Torsional vibration (see MG 1-16.82).
   b. Out-of-phase paralleling.
   c. Unbalanced load.

Authorized Engineering Information 11-12-1981.

MG 1-16.84 Stand-by Generator

Synchronous generators may at times be assigned a stand-by rating where the application is an emergency back-up power source and is not the prime power supply. Under such conditions, temperature rises up to 25 °C above those for continuous-duty operation may occur in accordance with Note III of MG 1-16.40. Operation at these stand-by temperature rise values causes the generator insulation to age thermally at about four to eight times the rate that occurs at the continuous-duty temperature rise values, i.e., operating one hour at standy-by temperature rise values is approximately equivalent to operating 4 to 8 hours at continuous-duty temperature rise values.

Authorized Engineering Information 11-12-1981.

MG 1-16.86 Machine Sound (Synchronous Generators)

A. SOUND QUALITY

Sound quality, that is, the distribution of effective sound intensities as a function of frequency, affects the objectionability of the sound.

A measurement of total sound does not completely define sound acceptability because machines with the same overall decibel sound level may have a different sound quality. It may be necessary, in some cases, to describe sound profile in more detail, including octave band values.

Copyright National Electrical Manufacturers Association
Provided by IHS under license with NEMA
No reproduction or networking permitted without license from IHS
Not for Resale

9009279 0003465 160

B. SOUND MEASUREMENT

Machine sound should be measured in accordance with the IEEE Std. 85, *Test Procedure for Airborne Sound Measurements on Rotating Electrical Machines*[1], in overall sound power levels using the A-weighting network and stated in decibels (reference = 10^{-12} watts).

Generator sound tests should be taken at rated voltage no load. The generator should be isolated from other sound sources.

Sound power values are related to the sound source and are not affected by environmental conditions. They are calculated from test data taken under prescribed conditions and the values can be repeated. Field measurements are measured in sound pressure. Measurements of sound pressure levels of generators installed in the field can be correlated to sound power levels using corrections to environmental conditions as outlined in NEMA Standards Publication No. MG 3-1974 (R 1979) *Sound Level Prediction for Installed/Rotating Electrical Machines.*

Authorized Engineering Information 11-12-1981.

[1]See Referenced Standards, page vi.

Copyright National Electrical Manufacturers Association
Provided by IHS under license with NEMA
No reproduction or networking permitted without license from IHS
Not for Resale

9009279 0003466 0T7

SECTION II

FRACTIONAL- AND INTEGRAL-HORSEPOWER MACHINES

Part 18. Definite-purpose Motors and Generators

The standards in this Part 18 of Section II cover the following machines:

A. Alternating-current Motors and Generators

Alternating-current motors and generators up to and including the ratings built in frames corresponding to the continuous open-type ratings given in the table below:

Synchronous Speed	Motors, Squirrel-cage and Wound Rotor, Hp	Motors, Synchronous, Hp		Generators, Synchronous, Revolving Field Type, kW at 0.8 Power Factor
		Power Factor		
		Unity	0.8	
3600	500	200	150	...
1800	500	200	150	150
1200	350	200	150	150
900	250	150	125	100
720	200	125	100	100
600	150	100	75	75
514	125	75	60	60

B. Direct-current Motors and Generators

Direct-current motors, generators and motor-generator sets (direct-current output) built in frames with continuous dripproof ratings, or equivalent capacities, up to and including:

motors: 1.25 horsepower per rpm, open type.
generators: 1.0 kilowatt per rpm, open type.

Copyright National Electrical Manufacturers Association
Provided by IHS under license with NEMA
No reproduction or networking permitted without license from IHS
Not for Resale

9009279 0003467 T33

TABLE OF CONTENTS FOR PART 18, DEFINITE-PURPOSE MOTORS AND GENERATORS

	PARAGRAPHS
Permanent-split Capacitor Industrial Instrument Motors and Gear Motors (Type 2-11)	18.001–18.013
Low-inertia Servo Industrial Instrument Motors and Gear Motors (Type 2-11)	18.026–18.038
Universal Motor Parts	18.051–18.061
Motors for Hermetic Refrigeration Compressors	18.076–18.093
Motors for Jet Pumps	18.326–18.341
Fractional-horsepower Motors for	
Shaft-mounted Fans and Blowers	18.126–18.141
Belted Fans and Blowers	18.176–18.189
Air Conditioning Condensers and Evaporator Fans	18.201–18.222
Sump Pumps	18.226–18.240
Gasoline Dispensing Pumps	18.251–18.266
Oil Burners	18.276–18.290
Home Laundry Equipment	18.301–18.314
Coolant Pumps	18.351–18.364
Carbonator Pumps	18.726–18.739
Submersible Motors for Deep Well Pumps—4-Inch	18.376–18.388
Submersible Motors for Deep Well Pumps—6-Inch	18.401–18.413
Submersible Motors for Deep Well Pumps—8-Inch	18.414–18.424
Integral-horsepower DC Elevator Motors	18.426–18.436
Motor-generator Sets for DC Elevator Motors	18.451–18.459
Integral-horsepower AC Polyphase Elevator Motors	18.476–18.487
Integral-horsepower AC Crane Motors	18.501–18.520
Integral-horsepower Shell-type Motors for Woodworking and Machine-tool Applications	18.526–18.531
High-frequency Industrial Motors, Generators and Frequency Converters	18.551–18.555
Integral-horsepower AC Squirrel-cage Induction Motors for	
Vertical Turbine Pump Applications	18.590–18.591
Close-coupled Pumps	18.601–18.614
Chemical Process In-line Pump Applications	18.620
Process and In-line Pump Applications	18.625
DC Permanent-magnet Tachometer Generators for Control Systems	18.626–18.640
Torque Motors	18.651–18.653

Copyright National Electrical Manufacturers Association
Provided by IHS under license with NEMA
No reproduction or networking permitted without license from IHS
Not for Resale

9009279 0003468 97T

Part 18

DEFINITE-PURPOSE MOTORS AND GENERATORS

Permanent-split Capacitor Industrial Instrument Motors and Gear Motors (Type 2-11)

(A permanent-split capacitor industrial instrument motor or gear motor is a subfractional motor or gear motor intended for application in such instruments as recorders and timing devices.)

MG 1-18.01 Classification According to Electrical Type

These motors and gear motors are distributed-wound permanent-split capacitor motors of the following types:

1. Synchronous capacitor.
2. Nonsynchronous capacitor—normal slip.
3. Nonsynchronous capacitor—high slip.

NEMA Standard 5-16-1963.

RATINGS

MG 1-18.002 Voltage Rating

The voltage rating shall be 110 volts, 50 hertz; 115 volts, 60 hertz.

NEMA Standard 5-16-1963, revised 7-13-1977.

MG 1-18.003 Frequencies

Frequencies shall be 50 and 60 hertz.

NEMA Standard 5-16-1963.

MG 1-18.004 Speed and Torque Ratings

A. MOTORS

TABLE 1 OF MG 1-18.004
SYNCHRONOUS CAPACITOR MOTORS

AG Max. Inches	Frequency, hertz	Synchronous Rpm	Torque, Oz-in.	
			Full Load and Pull In*	Locked Rotor
1.75	60▲	1800	0.25	0.25
2.00	60	1800	0.35	0.35
2.50	60	1800	0.60	0.60
1.75	50	1500	0.27	0.27
2.00	50	1500	0.38	0.38
2.50	50	1500	0.66	0.66

*See MG 1-18.006.

TABLE 2 OF MG 1-18.004
NONSYNCHRONOUS CAPACITOR MOTORS—NORMAL SLIP

AG Max Inches	Frequency, hertz	Synchronous Rpm	Full-load Rpm	Torque, Oz-in.		
				Full Load	Break-down	Locked Rotor
1.75	60	1800	1550	1.0	1.7	1.0
2.00	60	1800	1550	1.4	2.4	1.4
2.50	60	1800	1550	2.4	3.7	2.4
1.75	50	1500	1250	1.1	1.8	1.1
2.00	50	1500	1250	1.6	2.6	1.6
2.50	50	1500	1250	2.7	3.7	2.7

▲ Editorially revised.

Copyright National Electrical Manufacturers Association
Provided by IHS under license with NEMA
No reproduction or networking permitted without license from IHS
Not for Resale

9009279 0003469 806

TABLE 3 OF MG 1-18.004
NONSYNCHRONOUS CAPACITOR MOTORS—HIGH SLIP

AG Max, Inches	Frequency, hertz	Synchronous Rpm	Full-load Rpm†	Torque, Oz-in.		
				Full Load	Break-down	Locked Rotor
1.75	60	1800	1200	0.75	1.5	1.5
2.00	60	1800	1200	1.10	2.2	2.2
2.50	60	1800	1200	1.80	3.7	3.7
1.75	50	1500	1000	0.82	1.6	1.6
2.00	50	1500	1000	1.20	2.4	2.4
2.50	50	1500	1000	2.00	4.0	4.0

B. GEAR MOTORS

TABLE 4 OF MG 1-18.004
SYNCHRONOUS CAPACITOR GEAR MOTORS—4 POLES

AG Max, Inches	Output Speed, Rpm	Ratios		Minimum Full-load and Pull-in* Torques, Oz-in.
		60 hertz	50 hertz	
3.44	300	6:1	5:1	2.5
3.44	100	18:1	15:1	8.0
2.94	60	30:1	25:1	7.5
2.94	30	60:1	50:1	12
2.94	15	120:1	100:1	25
2.94	10	180:1	150:1	38
2.94	6.0	300:1	250:1	64
2.69	3.0	600:1	500:1	80
2.69	2.0	900:1	750:1	90
2.69	1.0	1800:1	1500:1	100

* See MG 1-18.006.

TABLE 5 OF MG 1-18.004
NONSYNCHRONOUS CAPACITOR GEAR MOTORS—4 POLE—NORMAL SLIP

AG Max, Inches	Output Speed, Rpm†	Ratios		Minimum Output Torque, Oz-in.
		60 hertz	50 hertz	
3.44	...	6:1	5:1	10
2.94	...	18:1	15:1	18
2.94	...	30:1	25:1	27
2.94	...	60:1	50:1	48
2.69	...	120:1	100:1	73
2.69	...	180:1	150:1	75
2.69	...	300:1	250:1	75
2.69	...	600:1	500:1	80
2.69	...	900:1	750:1	90
2.69	...	1800:1	1500:1	100

† Since output speeds are a function of the number of stages of gearing and gear efficiencies, they are not specified.

Copyright National Electrical Manufacturers Association
Provided by IHS under license with NEMA
No reproduction or networking permitted without license from IHS
Not for Resale

9009279 0003470 528

TABLE 6 OF MG 1-18.004
NONSYNCHRONOUS CAPACITOR GEAR MOTORS—4-POLE—HIGH SLIP

AG Max, Inches	Output Speed, Rpm†	Ratios		Minimum Output Torque, Oz-in.
		60 hertz	50 hertz	
3.44	...	6:1	5:1	8.2
2.94	...	18:1	15:1	14
2.94	...	30:1	25:1	24
2.94	...	60:1	50:1	37
2.94	...	120:1	100:1	75
2.69	...	180:1	150:1	75
2.69	...	300:1	250:1	75
2.69	...	600:1	500:1	80
2.69	...	900:1	750:1	90
2.69	...	1800:1	1500:1	100

† Since output speeds are a function of the number of stages of gearing and gear efficiencies, they are not specified.

NEMA Standard 5-16-1963, revised 7-13-1977.

TESTS AND PERFORMANCE

MG 1-18.005 Temperature Rise

The permanent-split capacitor industrial instrument motor or gear motor shall have a Class A insulation system. The temperature rise above the temperature of the cooling medium for each of the various parts of the motor or gear motor, when tested in accordance with the rating, shall not exceed the following values:

COIL WINDINGS, DEGREES C	
Resistance or Thermocouple	65

NOTE I—All temperatures are based on a maximum ambient temperature of 40°C. Abnormal deterioration of insulation may be expected if this ambient temperature is exceeded in regular operation.

NEMA Standard 5-16-1963.

NOTE II—The temperature rises given in the foregoing paragraph are based on the motor being mounted so as not to conduct heat to a secondary mounting. If a mounting is provided which acts as a heat sink, the temperature rise can be considerably reduced.

Authorized Engineering Information 5-16-1963, revised 7-13-1977.

MG 1-18.006 Rated Pull-in Torque

The rated pull-in torque of a synchronous industrial instrument motor or gear motor shall be the maximum constant torque under which the motor will pull its connected friction load, having substantially zero load inertia, into synchronism when rated frequency and voltage are applied, subject to the voltage and frequency variations given in MG 1-12.43, MG 1-12.44, and MG 1-12.45.

NEMA Standard 5-16-1963.

MG 1-18.007 Variation from Rated Voltage

See MG 1-12.43.

MG 1-18.008 Variation from Rated Frequency

See MG 1-12.44.

MG 1-18.009 Combined Variation of Voltage and Frequency

See MG 1-12.45.

MG 1-18.010 Variation from Rated Speed—Nonsynchronous Motors

The variation from rated speed of nonsynchronous motors shall not exceed 20 percent when measured at rated load with rated voltage and frequency applied and with the motor temperature approximately 25°C.

NEMA Standard 5-16-1963, revised 7-13-1977.

MG 1-18.011 High-potential Test

See MG 1-3.01 and MG 1-12.03.

Copyright National Electrical Manufacturers Association
Provided by IHS under license with NEMA
No reproduction or networking permitted without license from IHS
Not for Resale

9009279 0003471 464

MANUFACTURING

MG 1-18.012 Direction of Rotation and Terminal Markings

The direction of rotation shown in the following terminal diagrams is referenced viewing the shaft end (end opposite terminal leads) on both motors and gear motors.

A. Three Terminal Leads

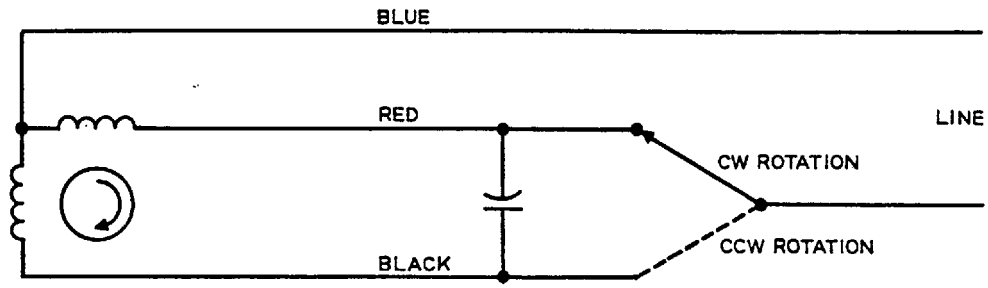

B. Four Terminal Leads

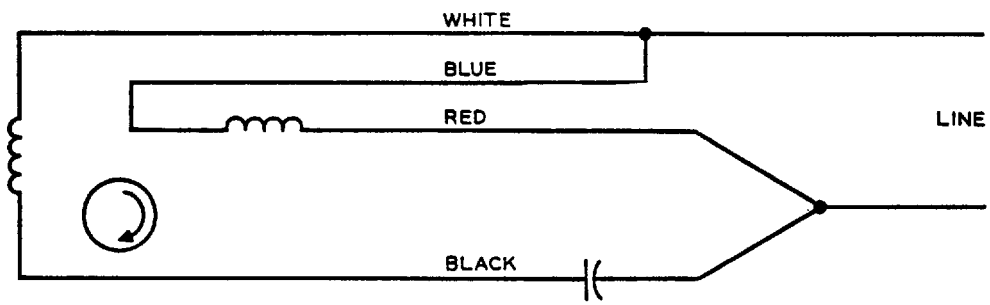

For CCW rotation, interchange leads of either phase.

NEMA Standard 5-16-1963.

C. Five Terminal Leads Connected for Single-phase Servo Operation (Center Tap)

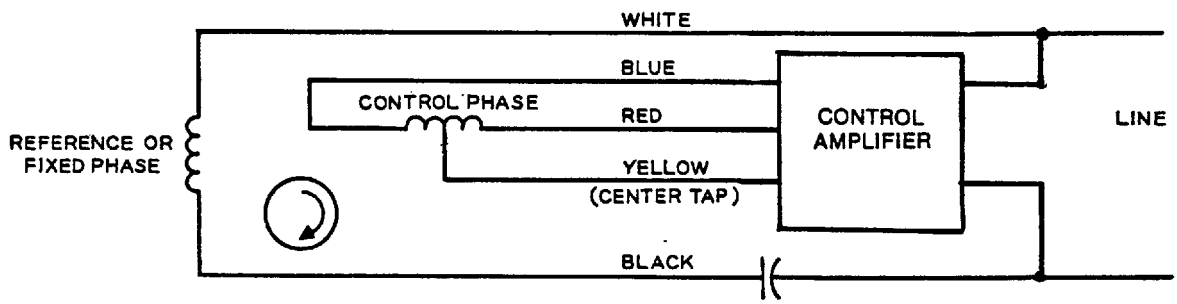

For CCW rotation, interchange leads of either phase.

Suggested Standard for Future Design 5-16-1963, NEMA Standard 7-13-1967, revised 7-13-1977.

Copyright National Electrical Manufacturers Association
Provided by IHS under license with NEMA
No reproduction or networking permitted without license from IHS
Not for Resale

9009279 0003472 3T0

MG 1-18.013 General Mechanical Features

A. Motors

Permanent-split capacitor industrial instrument motors shall be constructed with the following mechanical features:

1. Totally enclosed.
2. Ball bearing.
3. Operation in any position.
4. Mounting shall be face type by two No. 8-32 tapped holes 180 degrees apart located as shown in Figure 1. Shaft extension and mounting dimensions shall be in accordance with Figure 1.

B. Gear Motors

Permanent-split capacitor industrial instrument gear motors shall be constructed with the following mechanical features:

1. Totally enclosed.
2. Ball bearing—rotor shaft.
3. Sleeve bearing—gear shafts.
4. Operation only in horizontal position.
5. Mounting shall be face type by two No. 8-32 extended studs located as shown in Figure 2. Shaft extension and mounting dimensions shall be in accordance with Figure 2.

NEMA Standard 4-16-1963, revised 7-13-1977.

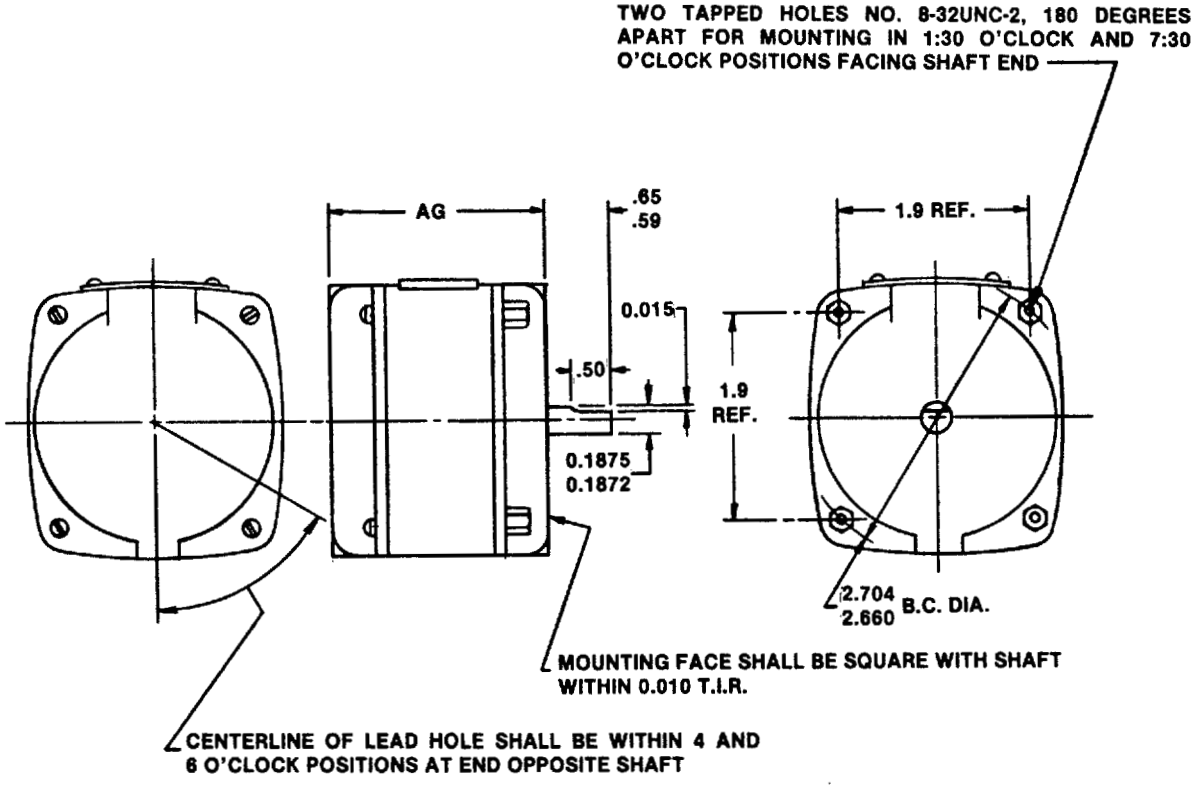

All dimensions in inches

Fig. 1 of MG 1-18.013

Dimensions for Permanent-split Capacitor Industrial Instrument Motors (Type 2-11)

Copyright National Electrical Manufacturers Association
Provided by IHS under license with NEMA
No reproduction or networking permitted without license from IHS
Not for Resale

9009279 0003473 237

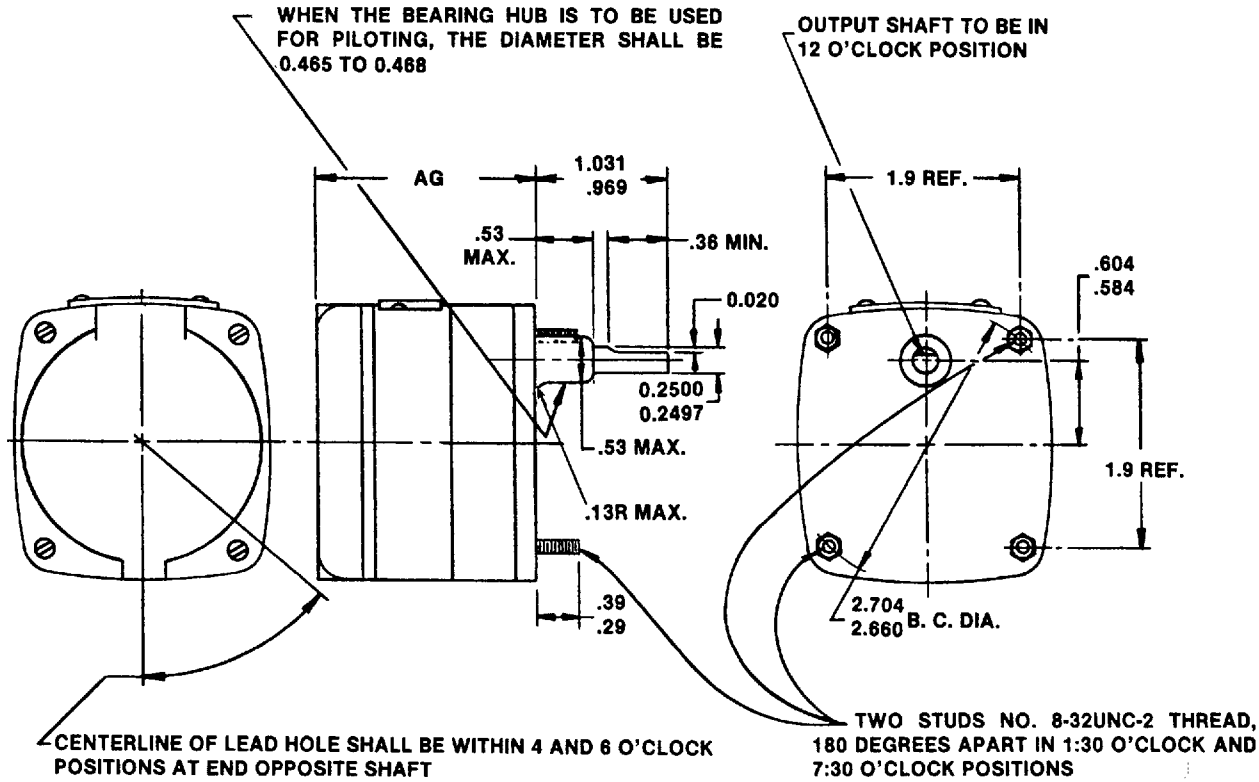

All dimensions in inches.

Fig. 2 of MG 1-18.013

Dimensions for Permanent-split Capacitor Industrial Instrument Gear Motors (Type 2-11)

Copyright National Electrical Manufacturers Association
Provided by IHS under license with NEMA
No reproduction or networking permitted without license from IHS
Not for Resale

9009279 0003474 173

Low-inertia Servo Industrial Instrument Motors and Gear Motors (Type 2-11)

(A low-inertia servo industrial instrument motor or gear motor is a subfractional motor or gear motor intended for applications in such instruments as self-balancing recorders and remote positioning devices.)

MG 1-18.026 Classification According to Electrical Type

1. Permanent-split capacitor.
2. Two phase.

NEMA Standard 5-16-1963.

RATINGS

MG 1-18.027 Voltage Ratings and Control Phase Impedances

A. FIXED PHASE

1. 110 volts, 50 hertz.
2. 115 volts, 60 hertz.

B. CONTROL PHASE

Frequency, Hertz	Locked Rotor Control Phase Impedance, Ohms	Rated Control Phase Voltage, Volts	Minimum Control Phase Voltage to Start (Breakaway) Volts
60	500—6000	165	16.5
	2500—3000	115	11.5
	40—48	15	1.5
50	4500—5500	165	16.5
	2000—2500	110	11.0
	33—40	15	1.5

NEMA Standard 5-16-1963, revised 7-13-1977.

MG 1-18.028 Frequencies

Frequencies shall be 50 and 60 hertz.

NEMA Standard 5-16-1963.

MG 1-18.029 Speed and Torque Ratings and Rotor Inertia

A. MOTORS

Frequency, hertz	Speed, Rpm		
	Synchronous	No Load	Full Load
60	1800	1500	1200
50	1500	1250	1000

AG Max. Inches	Frequency, Hertz	Torque Oz-in.		Maximum Rotor Inertia, Oz-in. sec.^{2}
		Full Load	Locked Rotor and Breakdown	
2.02	60	0.9	2.0	.00025
	50	1.0	2.2	.00025
2.19	60	1.1	2.8	.00035
	50	1.2	3.0	.00035

B. GEAR MOTORS

AG Max. Inches	Ratios		Minimum Output Torque, Oz-in.
	60 Hertz	50 Hertz	
2.87	6:1	5:1	4.9
2.87	18:1	15:1	14
2.87	30:1	25:1	24
3.03	60:1	50:1	37
3.03	120:1	100:1	75
3.03	180:1	150:1	75
2.67	300:1	250:1	75
2.67	600:1	500:1	80
2.67	900:1	750:1	90
2.67	1800:1	1500:1	100

Since output speeds are a function of the number of stages of gearing and gear efficiencies, they are not specified.

NEMA Standard 5-16-1963, revised 7-13-1977.

Copyright National Electrical Manufacturers Association
Provided by IHS under license with NEMA
No reproduction or networking permitted without license from IHS

Not for Resale

9009279 0003475 00T

TESTS AND PERFORMANCE

MG 1-18.030 Temperature Rise

The low-inertia servo industrial instrument motor or gear motor shall have a Class A insulation system. The temperature rise above the temperature of the cooling medium for each of the various parts of the motor or gear motor, when tested in accordance with the rating, shall not exceed the following values:

COIL WINDINGS, DEGREES C	
Resistance or Thermocouple	65

NOTE I—All temperatures are based on a maximum ambient temperature of 40°C. Abnormal deterioration of insulation may be expected if this ambient temperature is exceeded in regular operation.

NEMA Standard 5-16-1963, revised 7-13-1977.

NOTE II—The temperature rises given in the foregoing paragraph are based on the motor being mounted so as not to conduct heat to a secondary mounting. If a mounting is provided which acts as a heat sink, the temperature rise can be considerably reduced.

Authorized Engineering Information 5-16-1963, revised 7-13-1977.

MG 1-18.031 Control Voltage to Start

All low-inertia servo industrial instrument motors and gear motors shall start without load when rated voltage is applied to the fixed phase and the control phase voltage to start, as given in MG 1-18.027, is applied to the control phase. The control phase voltage shall be applied gradually, starting from zero.

NEMA Standard 5-16-1963.

MG 1-18.032 Variation from Fixed Phase Rated Voltage

Low-inertia servo industrial instrument motors and gear motors shall operate successfully at rated load and rated frequency with a variation in the fixed phase voltage up to plus or minus 10 percent of the rated fixed phase voltage. Performance within this voltage variation will not necessarily be in accordance with the standards established for operation at rated fixed phase voltage.

NEMA Standard 5-16-1963.

MG 1-18.033 Variation from Rated Frequency

Low-inertia servo industrial instrument motors and gear motors shall operate successfully at rated load and at rated fixed phase voltage with a variation in the frequency up to 5 percent above or below the rated frequency. Performance within this frequency variation will not necessarily be in accordance with the standards established for operation at rated frequency.

NEMA Standard 5-16-1963.

MG 1-18.034 Combined Variation of Voltage and Frequency

Low-inertia servo industrial instrument motors and gear motors shall operate successfully at rated load with a combined variation in the fixed phase voltage and the frequency up to 10 percent above or below the rated fixed phase voltage and the rated frequency, provided that the frequency variation does not exceed 5 percent. Performance within this combined variation will not necessarily be in accordance with the standards established for operation at rated fixed phase voltage and rated frequency.

NEMA Standard 5-16-1963.

MG 1-18.035 Variation from Rated Speed

The variation from the rated speed shall not exceed 20 percent when measured at rated fixed phase voltage, frequency and load and at an ambient temperature of 25 °C.

NEMA Standard 5-16-1963, revised 7-13-1977.

MG 1-18.036 High-potential Test

See MG 1-3.01 and MG 1-12.03.

Copyright National Electrical Manufacturers Association
Provided by IHS under license with NEMA
No reproduction or networking permitted without license from IHS
Not for Resale

9009279 0003476 T46

MANUFACTURING

MG 1-18.037 Direction of Rotation and Terminal Markings

The direction of rotation shown in the following terminal diagrams is referenced viewing the shaft end (end opposite terminal leads) on both motors and gear motors.

A. Four Terminal Leads Connected for Single-phase Servo Operation

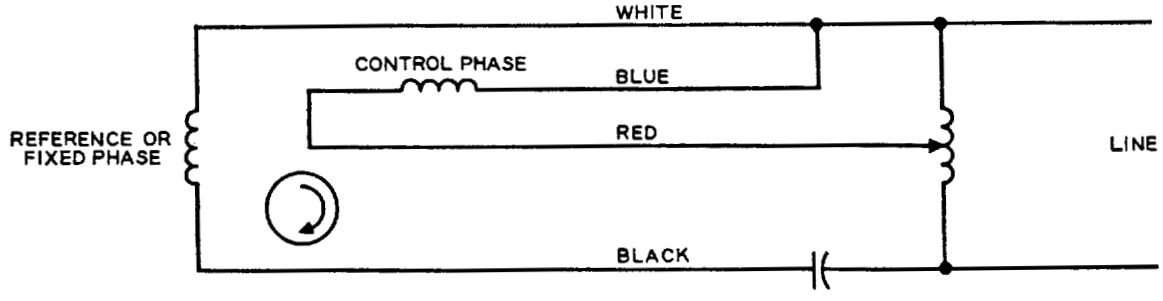

For CCW rotation, interchange leads of either phase.

B. Four Terminal Leads, Two-phase Servo Connection

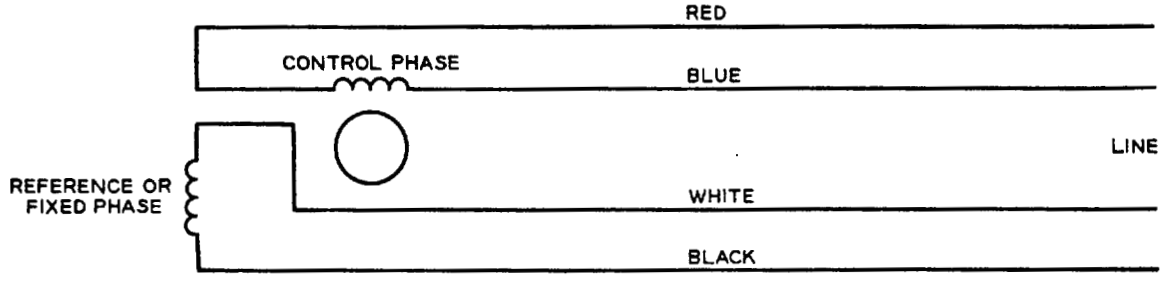

When connected with a capacitor in accordance with par. A, the direction of rotation shall be as shown in par. A.

NEMA Standard 5-16-1963.

C. Five Terminal Leads Connected for Single-phase Servo Operation (Center Tap)

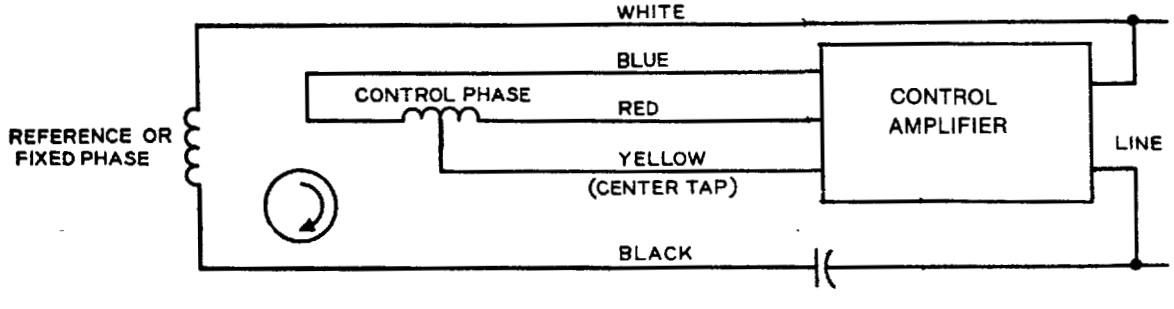

For CCW rotation, interchange leads of either phase.

Suggested Standard for Future Design 5-16-1963, NEMA Standard 7-13-1967, revised 7-13-1977.

Copyright National Electrical Manufacturers Association
Provided by IHS under license with NEMA
No reproduction or networking permitted without license from IHS
Not for Resale

9009279 0003477 982

MG 1-18.038 General Mechanical Features

A. Motors

Low-inertia servo industrial instrument motors shall be constructed with the following mechanical features:

1. Totally enclosed.
2. Ball bearing.
3. Operation in any position.
4. Mounting shall be face type by two No. 8-32 tapped holes 180 degrees apart. Shaft extension and mounting dimensions shall be in accordance with Figure 1.

B. Gear Motors

Low-inertia servo industrial instrument gear motors shall be constructed with the following mechanical features:

1. Totally enclosed.
2. Ball bearing—rotor shaft.
3. Sleeve bearing—gear shafts.
4. Operation only in horizontal position.
5. Mounting shall be face type by two No. 8-32 studs located as shown in Figure 2. Shaft extension and mounting dimensions shall be in accordance with Figure 2.

NEMA Standard 5-16-1963, revised 7-13-1977.

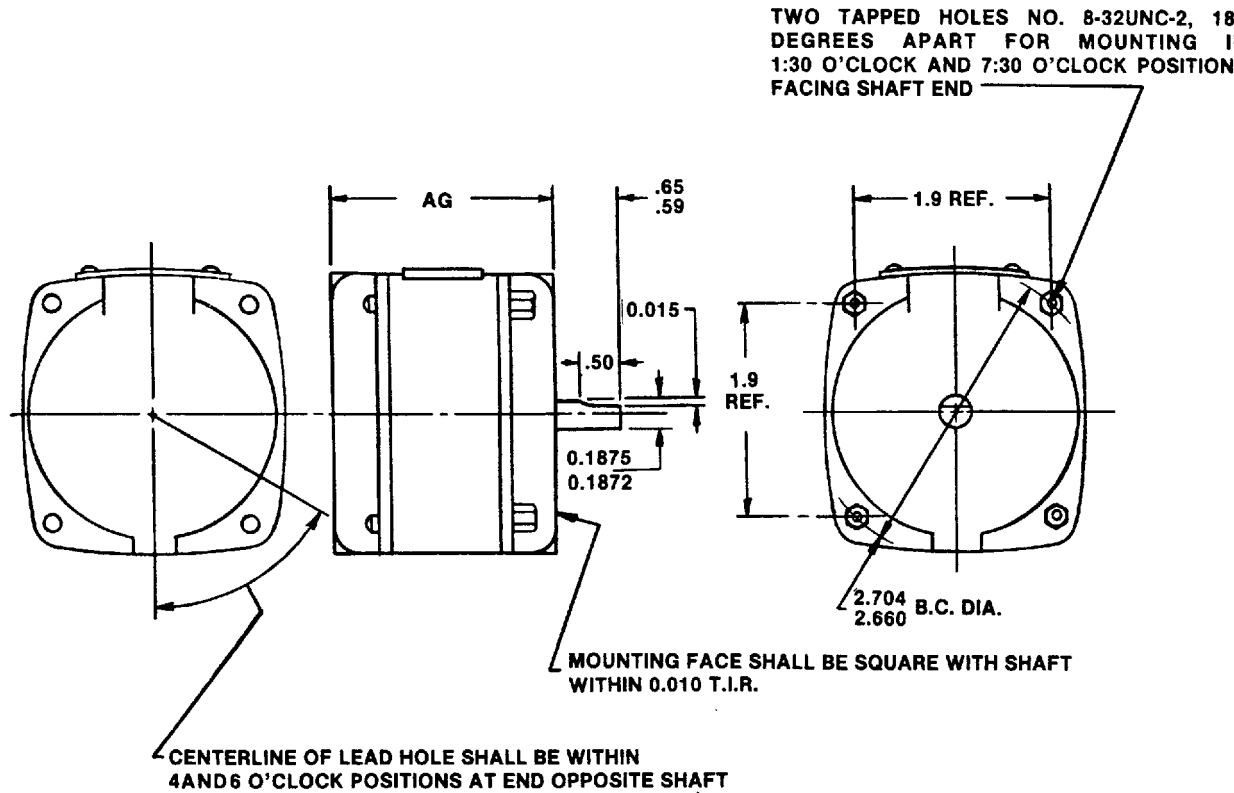

All dimensions in inches.

Fig. 1 of MG 1-18.038

Dimensions for Low-inertia Servo Industrial Instrument Motors

Copyright National Electrical Manufacturers Association
Provided by IHS under license with NEMA
No reproduction or networking permitted without license from IHS
Not for Resale

9009279 0003478 819

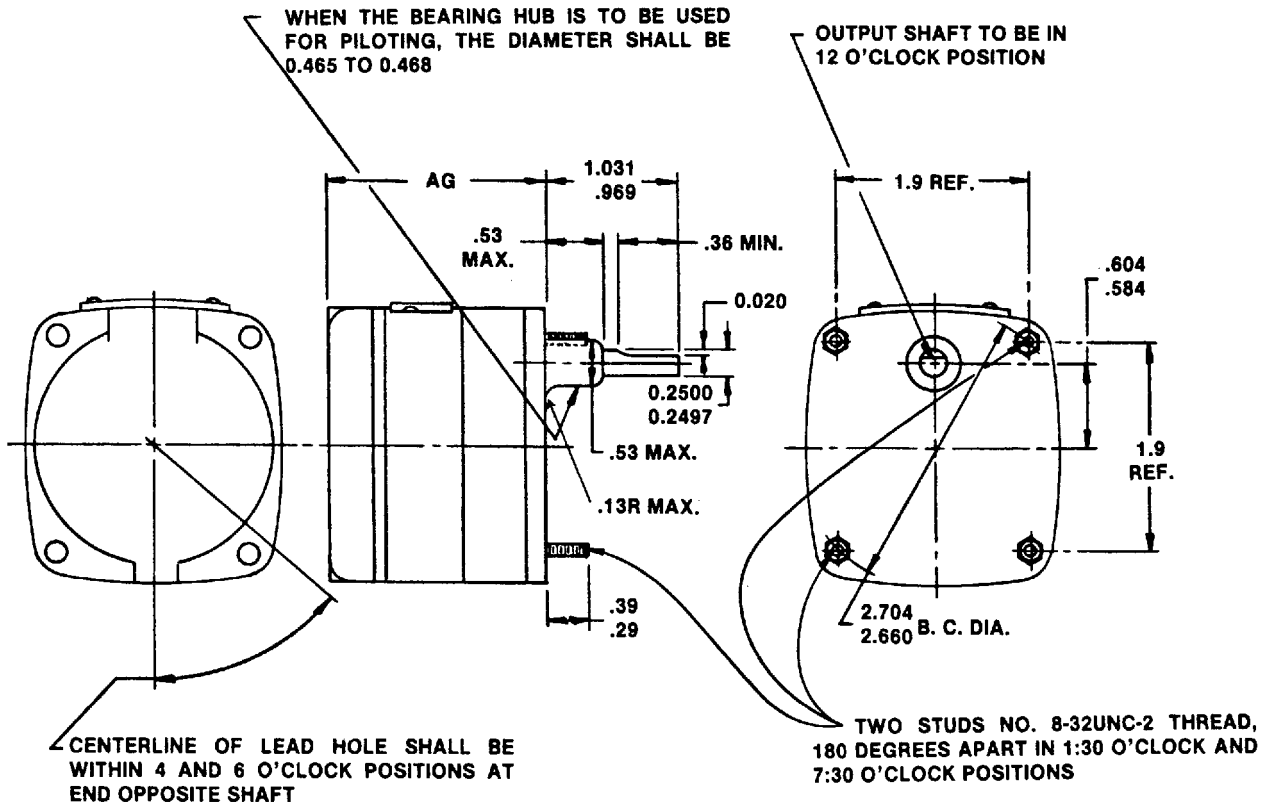

All dimensions in inches.

Fig. 2 of MG 1-18.038

Dimensions for Low-inertia Servo Industrial Instrument Gear Motors

Copyright National Electrical Manufacturers Association
Provided by IHS under license with NEMA
No reproduction or networking permitted without license from IHS

Not for Resale

9009279 0003479 755

Universal Motor Parts

[A set of universal motor parts consists of stator (field) and rotor (armature) without brushholder mechanism, end shields, bearings or conventional frame.]

MG 1-18.051 Classification According to Electrical Type

Motor windings are (a) salient-pole type or (b) distributed type.

Recommended Standard 11-17-1949; NEMA Standard 5-17-1953.

RATINGS

MG 1-18.052 Voltage Ratings

Voltages shall be 115 and 230 volts, direct and alternating current.

NEMA Standard 11-17-1949.

MG 1-18.053 Frequencies

The frequency shall be 60 hertz/direct current.

NOTE—Universal motors will operate successfully on all frequencies below 60 hertz and on direct current.

Recommended Standard 11-17-1949; NEMA Standard 5-17-1953.

MG 1-18.054 Speed

At speeds less than 5000 rpm, there will be a marked difference in performance characteristics between operation on alternating current and operation on direct current.

At speeds greater than 5000 rpm, there may be a difference in performance on alternating current as compared to direct current if a design is intended to favor some characteristic, such as brush life, on the predominantly used frequency.

Authorized Engineering Information 11-17-1949, revised 7-17-1973.

TESTS AND PERFORMANCE

MG 1-18.055 High-potential Test

See MG 1-3.01 and MG 1-12.03.

Recommended Standard 11-17-1949; NEMA Standard 5-17-1953, revised 11-21-1968, 7-17-1973; 1-5-1977.

MG 1-18.056 Variation from Rated Voltage

See MG 1-12.43.

MG 1-18.057 Temperature Rise

The temperature rise of a motor built from universal motor parts depends upon the design of the cooling system, as well as upon the motor losses. Motor parts shall have losses and operating characteristics approximately the same as those of complete motors of similar ratings.

NOTE—The driven-device manufacturer has control of the temperature rise of the motor built from the parts, and the motor manufacturer should be consulted on this phase of the application of the motor parts.

Recommended Standard 11-17-1949; NEMA Standard 5-17-1953, revised 7-17-1973.

Copyright National Electrical Manufacturers Association
Provided by IHS under license with NEMA
No reproduction or networking permitted without license from IHS
Not for Resale

9009279 0003480 477

MANUFACTURING

MG 1-18.058 Mounting Dimensions for Universal Motor Stators

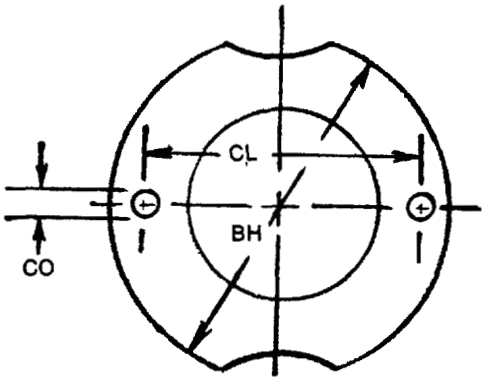

BH (+0.000) (−0.002)	CL	CO (to fit)
2.125	1.83	#6 Screw
2.437	2.12	#8 Screw
2.625	2.22	#8 Screw
2.875	2.44	#8 Screw
3.187	2.75	#10 Screw
3.687	3.25	#10 Screw
4.375	4.12	#10 Screw

All dimensions in inches.

NOTE—See MG 1-4.01 for meaning of letter dimensions.

Recommended Standard 6-4-1948, revised 6-24-1949; NEMA Standard 5-17-1953, revised 7-17-1973.

MG 1-18.059 Tolerances on Shaft Extension Diameters and Keyseats

See MG 1-4.05.

MG 1-18.060 Direction of Rotation

The specified direction of rotation is that noted when facing the end of the machine opposite the drive.

Authorized Engineering Information 7-17-1973.

MG 1-18.061 Armature Internal Connections

Parts sets which are intended for reversible motors should have armatures with neutral internal connections. For nonreversible motors, the armature should be constructed to have the commutator leads shifted to give the best brush life and commutation.

Armature internal connections are normally based on the motor's brush mechanism being located midway between the poles of the stator.

Authorized Engineering Information 11-17-1949, revised 7-17-1973.

Copyright National Electrical Manufacturers Association
Provided by IHS under license with NEMA
No reproduction or networking permitted without license from IHS
Not for Resale

9009279 0003481 303

Motors for Hermetic Refrigeration Compressors

(A hermetic motor consists of a stator and rotor without shaft, end shields or bearings for installation in refrigeration compressors of the hermetically sealed type.)

MG 1-18.076 Classification According to Electrical Type

1. Single phase.
   a. Split phase.
   b. Capacitor start.
   c. Two-value capacitor.
   d. Permanent-split capacitor.
2. Polyphase induction.
   Squirrel cage, constant speed.

Recommended Standard 1-25-1946, NEMA Standard 11-12-1953, revised 11-14-1957.

RATINGS

MG 1-18.077 Voltage Ratings

A. SINGLE-PHASE MOTORS

1. 60 hertz—115, 200 and 230 volts.
2. 50 hertz—110 and 220 volts.

B. POLYPHASE INDUCTION MOTORS

1. 60 hertz—200, 230, 460 and 575 volts.
2. 50 hertz—220 and 380 volts.

Recommended Standard 1-25-1946, revised 8-16-1951, NEMA Standard 11-12-1953, revised 7-13-1960; 11-21-1968; 7-16-1969; 11-13-1969.

MG 1-18.078 Frequencies

Frequencies shall be 50 and 60 hertz.

Recommended Standard 1-25-1946, NEMA Standard 11-12-1953, revised 11-11-1954.

MG 1-18.079 Speed Ratings

Synchronous speed ratings shall be 1800 rpm and 3600 rpm for 60-hertz hermetic motors and 1500 rpm and 3000 rpm for 50-hertz hermetic motors.

Recommended Standard 1-25-1946, revised 6-24-1949; 8-16-1951, NEMA Standard 11-12-1953, revised 11-11-1954; 7-13-1960.

TESTS AND PERFORMANCE

MG 1-18.080 Operating Temperature

The operating temperature of a hermetic motor depends on the design of the cooling system as well as the motor losses. Therefore, the driven-device manufacturer has control of the operating temperature of the hermetic motor, and the motor manufacturer should be consulted on this phase of the application.

Recommended Standard 1-25-1946, revised 11-17-1949; 8-16-1951, NEMA Standard 11-12-1953, Authorized Engineering Information 7-13-1960.

MG 1-18.081 Breakdown Torque and Locked-rotor Current of 60-hertz Hermetic Motors

A. BREAKDOWN TORQUE

The breakdown torques of 60-hertz hermetic motors, with rated voltage and frequency applied, shall be in accordance with the values given in the following tables which represent the upper limit of the range of application for these motors.

Copyright National Electrical Manufacturers Association
Provided by IHS under license with NEMA
No reproduction or networking permitted without license from IHS
Not for Resale

9009279 0003482 24T

B. Locked-rotor Current

The locked-rotor currents of 60-hertz hermetic motors, with rated voltage and frequency applied and with rotor locked, shall not exceed the values given in the following tables:

SINGLE-PHASE HERMETIC MOTORS

1800 Rpm			3600 Rpm	
Breakdown Torque, Ounce-feet	Locked-rotor Current, Amperes at 115 Volts		Breakdown Torque, Ounce-feet	Locked-rotor Current, Amperes at 115 Volts
10.5	20		5.25	20
12.5	20		6.25	20
15	20		7.5	20
18	20		9.0	20
21.5	20		10.75	21
26	21.5		13.0	23
31	23		15.5	26
37	28	23*	18.5	29
44.5	34	23*	22.0	33
53.5	40	..	27.0	38
64.5	48	46*	32.0	43
77	57	46*	38.5	49
92.5	68	46*	46.0	56

Breakdown Torque, Pound-feet	Locked-rotor Current, Amperes at 230 Volts	Breakdown Torque, Pound-feet	Locked-rotor Current, Amperes at 230 Volts
7	36	3.5	32
9	38	4.5	39
11	44	5.5	46
14	56	7.0	56
18	68	9.0	69
23	85	11.5	85
29	104	14.5	104
36	126	18.0	126
45	155	22.5	154

* Motors having locked-rotor currents within these values usually have lower locked-rotor torques than motors with the same breakdown torque ratings and the higher locked-rotor current values.

POLYPHASE SQUIRREL-CAGE INDUCTION HERMETIC MOTORS

1800 Rpm		3600 Rpm	
Breakdown Torque, Pound-feet	Locked-rotor Current, Amperes at 230 Volts	Breakdown Torque, Pound-feet	Locked-rotor Current, Amperes at 230 Volts
9	24	4.5	24
11	30	5.5	30
14	38	7.0	38
18	48	9.0	48
23	59	11.5	59
29	71	14.5	71
36	85	18.0	85
45	102	22.5	102
56	125	28.0	125
70	153		
88	189		

NEMA Standard 7-13-1960; revised 11-21-1968.

(*Continued*)

The temperature of the motor at the start of the test for breakdown torque shall be approximately 25 °C.

Where either single-phase or polyphase motors may be used in the same compressor, it is recommended that the polyphase motor used have at least the next larger breakdown torque rating than that of the single-phase motor selected.

Authorized Engineering Information 7-13-1960.

MG 1-18.082 High-potential Test

See MG 1-3.01 and MG 1-12.03.

MG 1-18.083 Variation from Rated Voltage

See MG 1-12.43.

MG 1-18.084 Variation from Rated Frequency

See MG 1-12.44.

MG 1-18.085 Combined Variation of Voltage and Frequency

See MG 1-12.45.

MG 1-18.086 Direction of Rotation

The direction of rotation for single-phase hermetic motors shall be counter-clockwise facing the lead end.

Recommended Standard 1-25-1946, revised 8-16-1951, NEMA Standard 11-12-1953, revised 7-13-1960.

MG 1-18.087 Terminal Lead Markings

The terminal lead markings for single-phase hermetic motors shall be as follows:

Start winding—white.

Common start and main—white with black tracer.

Main winding—white with red tracer.

Recommended Standard 1-25-1946, revised 8-16-1951, NEMA Standard 11-12-1953, revised 7-13-1960.

Copyright National Electrical Manufacturers Association
Provided by IHS under license with NEMA
No reproduction or networking permitted without license from IHS
Not for Resale

9009279 0003483 186

MG 1-18.088 Method of Test for Cleanliness of Single-phase, Hermetic Motors having Stator Diameters of 6.292 Inches and Smaller

When a test for cleanliness of a single-phase hermetic motor having a stator outside diameter of 6.292 inches or smaller is made, the following extraction test procedure shall be used in determining the weights of residue:

A. Stators

1. Place a sample stator in a cylindrical metal or porcelain enamel container having an inside diameter 0.50 to 1.5 inches larger than the outside diameter of the stator. Use a perforated or otherwise open spacer to support the stator so that the solvent may circulate freely.
2. Add sufficient methanol at room temperature (70° to 90°F) to completely cover the stator, including windings.
3. Rotate the stator for 10 minutes at 200-240 rpm.
4. Remove the stator, and evaporate the liquid in the container to dryness, and heat the residue to constant weight at 220° to 230°F. The residue must be essentially free from metal particles.

B. Rotors

1. Place two rotors in a container holding 2 liters of toluol. Bring the solution to boil, and boil for 15 minutes.
2. Remove the rotors, evaporate the liquid in the container to dryness and heat the residue to constant weight at 220° to 230°F. The residue shall be essentially free from metal particles.

Recommended Standard 6-24-1949, revised 8-16-1951, NEMA Standard 11-12-1953, revised 7-13-1960.

MG 1-18.088.a Method of Test for Cleanliness of Hermetic Motors having Stator Diameters of 8.777 Inches and Smaller

A. Purpose

The purpose of this test is to evaluate the cleanliness of a hermetic stator and rotor by determining the amount, for which weights are not specified, of insoluble residue (metallic chips, lint, dust, etc.) and soluble residue (winding oil, machining oil, etc.) present as a result of the various manufacturing processes. It is not the purpose of this particular procedure to determine the extractables present in an insulation system or to determine the suitability of an insulation system to resist the various refrigerants and oils present in a hermetic unit.

B. Description

The stator or rotor is vertically agitated in room-temperature Refrigerant 113 at a rate of forty to fifty 2.5-inch strokes per minute for 30 minutes. The Refrigerant 113 washes out insoluble and soluble residues with negligible solvent or chemical action on the insulation or metals present. The insoluble residue is separated from the Refrigerant 113 and the Refrigerant 113 is reduced to near dryness by distillation. Both the insoluble and the soluble residues are dried for 15 minutes at 125°C and weighed.

C. Sample Storage

The stator or rotor sample shall be placed in a plastic bag which shall be sealed at the site where the sample is taken. The sample shall be stored in this container until it is tested.

D. Equipment

1. Stator agitation equipment.
2. Distilling equipment.
3. Hot plate.
4. Oven.
5. Aluminum weighing dishes.
6. Glass beakers.
7. Stainless steel containers.

E. Procedure

1. Select a stainless steel container with a diameter which is 0.50 to 1.5 inches larger than the stator or rotor diameter and at least 4 inches higher than the total stator or rotor heights.

2. Position the stator or rotor on a holder so that there will be a 0.50-inch clearance between the stator or rotor and the bottom of the container at the bottom of the stroke. With the stator or rotor positioned in the container, pour in enough Refrigerant 113 so that there will be a minimum of 1 inch of liquid above the upper end wire or end ring with the supporting holder at the top of the stroke.

The total residue content of the Refrigerant 113 used in the stator cleanliness test shall be 0.0010 grams per liter maximum. This shall be determined by transferring 1000 milliliters of Refrigerant 113 to a 4000-milliliter Erlenmeyer flask connected to a distilling condenser.

Distill over the Refrigerant 113 until a volume of less than 100 milliliters remains in the flask. Transfer this portion to a tared aluminum dish which is to be carefully warmed on a hot plate. until between 0.25 and 0.50 centimeters of liquid remains. Dry the dish and residue for 15 minutes at 125°C, cool for 15 minutes in a desiccator, and weigh to the nearest 0.001 gram.

3. Agitate vertically the stator or rotor in Refrigerant 113 at 25°C plus or minus 5°C at a rate of forty to fifty 2.5-inch strokes per minute for 30 minutes. After 30 minutes of agitation, lift the stator or rotor above the surface of the Refrigerant 113 and allow it to drain until the dripping stops.

Copyright National Electrical Manufacturers Association
Provided by IHS under license with NEMA
No reproduction or networking permitted without license from IHS
Not for Resale

9009279 0003484 012

4. Transfer the Refrigerant 113 containing the soluble and insoluble residue (from par. 3) to a 4000-milliliter Erlenmeyer flask connected to a distilling condenser. Wash the stainless steel container with clean Refrigerant 113 several times and add the washings to the flask. Distill over the Refrigerant 113 until approximately 200 milliliters remains in the flask. Filter this portion through a pre-weighed high-retention filter. Wash the flask with clean Refrigerant 113 several times and filter these washings. Remove the filter and dry it for 15 minutes at 125 °C, cool for 15 minutes in a desiccator, and weigh to the nearest 0.001 gram. The following information shall be reported.

(a) Weight of the residue.
(b) Description of the residue.

5. Transfer the filtered Refrigerant 113 to a 250-milliliter glass beaker. Wash the filtering flask several times with clean Refrigerant 113 and transfer these washings to the beaker. Carefully warm the beaker and the soluble residue until a volume of less than 100 milliliters remains in the beaker. Transfer the contents of the beaker to a tared aluminum dish. Carefully warm the aluminum dish on a hot plate until between 0.25 and 0.50 centimeters of liquid remains. Dry the dish and soluble residue for 15 minutes at 125 °C, cool for 15 minutes in a desiccator, and weigh to the nearest 0.001 gram. The following information shall be reported:

(a) Weight of residue.
(b) Description of the residue.

6. The report shall also include the date, stator or rotor type, and the outside diameter and the height of the lamination stacking.

Suggested Standard for Future Design 7-7-1965, reaffirmed 11-21-1968, NEMA Standard 11-12-1981. ▲

MANUFACTURING

MG 1-18.089 Rotor Bore Diameters and Keyway Dimensions for 60-hertz Hermetic Motors

The rotor bore diameters and keyway dimensions for 60-hertz hermetic motors shall be:

CA Dimension			Keyway Dimensions, Inches	
	Tolerance, Inches			
Rotor Bore Diameter, Inches	Plus	Minus	Width	Depth plus Diameter of Bore
0.625	0.0005	0.0000	...	...
0.750	0.0005	0.0000	...	...
0.875	0.0005	0.0000	0.1885 0.1905	0.9645 0.9795
1.000	0.0005	0.0000	0.1885 0.1905	1.0908 1.1058
1.125	0.0008	0.0000	0.251 0.253	1.242 1.257
1.250	0.0008	0.0000	0.251 0.253	1.367 1.382
1.375	0.001	0.000	0.313 0.315	1.519 1.534
1.500	0.001	0.000	0.376 0.378	1.669 1.684
1.875	0.001	0.000	0.501 0.503	2.125 2.140
2.125	0.001	0.000	0.501 0.503	2.375 2.390

NOTE—For lettering of dimension sheets, see MG 1-18.093.

Recommended Standard 11-15-1951, revised 1-22-1952, NEMA Standard 11-12-1953, revised 7-13-1960; 11-9-1961; 11-15-1962.

▲Revised.

Copyright National Electrical Manufacturers Association
Provided by IHS under license with NEMA
No reproduction or networking permitted without license from IHS
Not for Resale

9009279 0003485 T59

MG 1-18.090 Dimensions for 60-hertz Hermetic Motors

To assist the designer of the hermetic compressor, the following parametric dimensions for 60-hertz hermetic motors have been compiled; they are based upon information supplied by member companies of the NEMA Motor and Generator Section who build hermetic motors:

BH*	Number of Poles	CG (Max) and CH (Max) Three-phase Lead End	CG (Max) and CH (Max) Three-phase Opposite Lead End	CG (Max) and CH (Max) Single-phase Lead End	CG (Max) and CH (Max) Single-phase Opposite Lead End	BL (Max)	DE (Min)	CB (Max)‡	Stud Circle	Stud Diameter of Pin
4.792	2	...	...	1.25	1.25	4.28	2.50	1.12	4.593	0.175
5.480 round	2	...	...	1.25	1.22	4.75	2.75	1.31	5.280	0.255
"	4	...	...	1.19	1.19	4.88	3.38	1.31	5.280	0.199
5.480 square	2	...	...	1.19	1.19	4.69	2.75	1.31	5.280	0.199
"	4	...	...	1.06	1.06	4.56	3.12	1.38	5.280	0.199
6.292	2	1.62	1.50	1.50	1.38	5.75	3.25	1.62	5.719	0.255
"	4	1.25	1.19	1.38	1.25	5.75	4.06	1.97	5.719	0.255
7.480	2	2.12	2.00	2.00	1.88	6.75	3.88	2.00	6.969	0.255
"	4	1.88	1.75	1.88	1.75	6.75	4.50	2.25	6.969	0.255
8.777	2	2.50	2.25	2.25	2.12	8.00	4.69	2.25	8.250	0.255
"	4	2.12	2.00	2.00	1.88	8.00	5.44	2.75	8.250	0.255
10.125	2	3.00	3.00	2.50	2.25	9.38	5.50	2.50	9.500	0.380
"	4	2.75	2.38	2.75	2.12	9.75	6.38	3.00	9.500	0.380
12.375†	..	...	...	...	...	...	...	...	...	...
15.562†	..	...	...	...	...	...	...	...	...	...

• Approved as NEMA Standard 5-16-1963.

Tolerances for BH Dimensions—
4.792, 5.480, 6.292, 7.480—+0.000 inch, −0.002 inch.
8.777, 10.125, 12.375, 15.562—+0.000 inch, −0.003 inch.

† With or without shell.

‡ Applies to punched counterbores. When a sleeve is used, the dimension should be reduced by 0.25 inch.

A rotor counterbore will weaken the structure of the rotor core and will also tend to adversely affect performance by the removal of active material. It is therefore recommended that the counterbore be eliminated where possible and held to a minimum where required.

NOTE I—For lettering of dimension sheets, see MG 1-18.093.

NOTE II—For rotor bore diameters and keyway dimensions, see MG 1-18.089.

Recommended Standard 8-16-1951, revised 11-15-1951; 8-7-1952, NEMA Standard 11-12-1953, revised 11-11-1954 Suggested Standard for Future Design 11-11-1954, revised 5-17-1955; 11-17-1955, reaffirmed 6-1-1959, NEMA Standard 7-13-1960; revised 7-12-1961; 11-9-1961, Authorized Engineering Information 11-15-1962.

MG 1-18.091 Forming of End Wire

The dimensions of end wires shown in MG 1-18.090 are suggested values for preliminary design work. Before housing dimensions are finalized, it is recommended that the motor manufacturer be consulted. In any particular motor, dimensions larger or smaller than those shown may be the practicable limit with normal end-wire forming practice. The forming of end wires should be evaluated carefully as excessive forming may tend to damage the stator insulation.

Authorized Engineering Information 8-19-1964, revised 7-14-1971.

MG 1-18.092 Thermal Protectors Assembled On or In End Windings of Hermetic Motors

When thermal protectors are used with hermetic motors, the protectors are usually assembled on or in the motor end windings and located so that the best possible heat transfer between the winding and protector can be afforded without abusing the insulation on the motor winding or on the protector. Care must be exercised in assembly as additional forming of the motor winding for location of the protector may weaken or destroy the motor winding insulation.

It is usual practice for the thermal protector to be assembled on or in the winding by the motor manufacturer, or for the motor manufacturer to provide a formed pocket on or in the end winding for insertion of the protector.

Additional forming of the winding after installation of the protector is to be avoided. This forming may weaken the winding insulation, the protective insulation between the protector and the winding, or may change the protector calibration.

As the protector case is often a live current-carrying part, additional insulation between the protector and the winding may be necessary in addition to the motor conductor insulation. The motor manufacturer should be consulted.

End winding dimensions given in MG 1-18.090 are for motors without provision for thermal protectors; these dimensions must be increased when thermal protectors are provided. As thermal protectors of different sizes and shapes are available, the motor manufacturer must be consulted for end winding dimensions when thermal protectors are used.

Authorized Engineering Information 11-11-1965.

Copyright National Electrical Manufacturers Association
Provided by IHS under license with NEMA
No reproduction or networking permitted without license from IHS
Not for Resale

9009279 0003486 995

MG 1-18.093 Lettering of Dimensions for Hermetic Motors for Hermetic Compressors

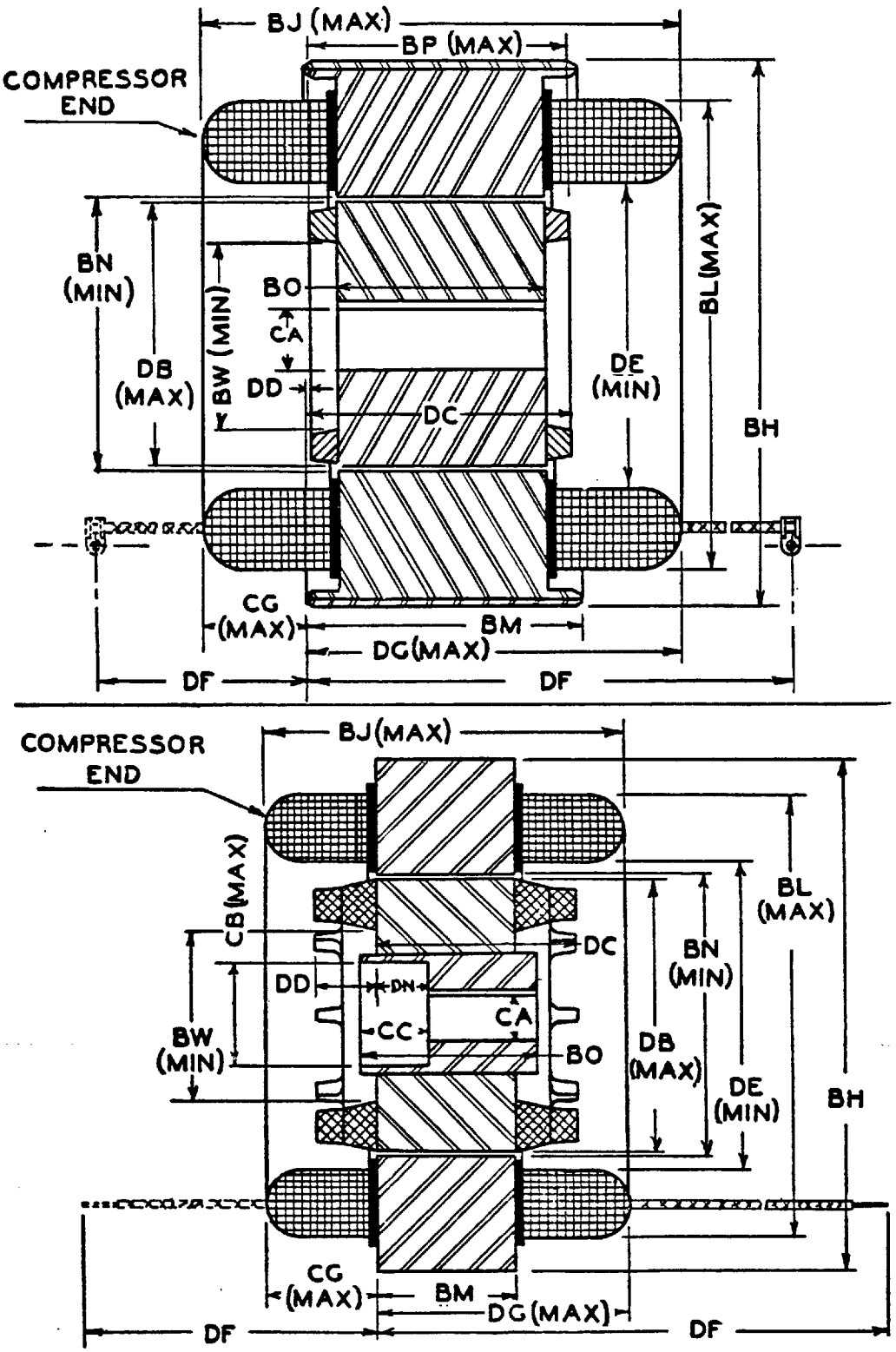

NOTE I—For the meaning of the letter dimensions, see MG 1-4.01.
NOTE II—The dimensions given in MG 1-18.090 apply only when the leads are located as shown by solid lines.

Recommended Standard 1-25-1946, revised 8-16-1951, NEMA Standard 11-12-1953, revised 11-11-1954; 5-17-1955.

Copyright National Electrical Manufacturers Association
Provided by IHS under license with NEMA
No reproduction or networking permitted without license from IHS
Not for Resale

9009279 0003487 821

Fractional-horsepower Motors for Shaft-mounted Fans and Blowers

(Motors in this classification are designed for propeller fans or centrifugal blowers mounted on the motor shaft, with or without air drawn over the motors [not suitable for belted loads].)

MG 1-18.126 Classification According to Electrical Type

1. Single-phase—1/20 horsepower and larger.
   a. Split phase.
   b. Permanent-split capacitor.
   c. Shaded pole.
2. Polyphase induction—1/8 horsepower and larger.
   Squirrel cage, constant speed.

Recommended Standard 1-25-1946, NEMA Standard 5-17-1953, revised 7-16-1975.

RATINGS

MG 1-18.127 Voltage Ratings

A. SINGLE-PHASE MOTORS

1. 60 hertz—115 and 230 volts.
2. 50 hertz—110 and 220 volts.

B. POLYPHASE INDUCTION MOTORS

1. 60 hertz—200, 230, 460 and 575 volts.
2. 50 hertz—220 and 380 volts.

Recommended Standard 1-25-1946, NEMA Standard 5-17-1953, revised 11-21-1968; 7-16-1969; 7-16-1975.

MG 1-18.128 Frequencies

Frequencies shall be 50 and 60 hertz.

Recommended Standard 1-25-1946, NEMA Standard 5-17-1953, revised 11-11-1954.

MG 1-18.129 Horsepower and Speed Ratings

A. SINGLE-SPEED MOTORS

See MG 1-10.32, par. A and B.

B. TWO-SPEED MOTORS

1. Single-phase Motors
   a. Split-phase, pole-changing motors
   1800/1200 rpm synchronous speeds,
   1725/1140 rpm approximate full-load speeds
   1200/900 rpm synchronous speeds,
   1140/850 rpm approximate full-load speeds
   b. Non-pole-changing, single-voltage, permanent-split-capacitor and shaded-pole motors shall be designed so that, when loaded by a fan or blower, they will operate at approximately the following speeds:
      (1) High-speed connection—the full load rpm indicated in MG 1-10.32, par. B.
      (2) Low-speed connection—66 percent of synchronous speed.
2. Polyphase Pole-changing Motors

   The speed ratings shall be the same as those listed for single-phase motors in item 1.a.

Recommended Standard 1-25-1946, revised 6-28-1951, NEMA Standard 5-17-1953, revised 11-11-1954; 11-12-1959; 7-16-1975.

Copyright National Electrical Manufacturers Association
Provided by IHS under license with NEMA
No reproduction or networking permitted without license from IHS
Not for Resale

9009279 0003488 768

TESTS AND PERFORMANCE

MG 1-18.130 Temperature Rise

Motors for shaft-mounted fans and blowers shall have Class A insulation. The temperature rise above the temperature of the cooling medium shall be in accordance with MG 1-12.41.

NOTE I—See MG 1-1.65 for description of Class A insulation.
NOTE II—Where air flow is required over the motor from the driven fan in order not to exceed the values given in MG 1-12.41, the motor nameplate shall state "air over" and sufficient air should be provided to meet the required temperature rise limit. The nameplate rating is then dependent upon sufficient air flow over the motor in the final application.

Recommended Standard 1-25-1946, revised 11-15-1951, NEMA Standard 5-17-1953, revised 11-12-1959; 7-16-1975.

MG 1-18.131 Basis of Horsepower Rating

For single-phase induction motors, see MG 1-10.33.

NEMA Standard 1-26-1948.

MG 1-18.132 Maximum Locked-rotor Current—Single-phase

See MG 1-12.32.

MG 1-18.133 High-potential Tests

See MG 1-3.01 and par. B of MG 1-12.03.

MG 1-18.134 Variation from Rated Voltage

See MG 1-12.43.

MG 1-18.135 Variation from Rated Frequency

See MG 1-12.44.

MG 1-18.136 Combined Variation of Voltage and Frequency

See MG 1-12.45.

MG 1-18.137 Direction of Rotation

The direction of rotation for motors for shaft-mounted fans and blowers shall be counterclockwise facing the end opposite the drive.

Recommended Standard 1-25-1946, NEMA Standard 5-17-1953, revised 7-16-1975.

MANUFACTURING

MG 1-18.138 General Mechanical Features

Motors for shaft-mounted fans and blowers shall be constructed with the following mechanical features (see dimension diagrams in MG 1-18.139):

1. Totally enclosed or open.
2. Horizontal motors shall have sleeve bearings and shall have provision for taking axial thrust. Vertical motors, depending on application, may be provided with either ball or sleeve bearings.
3. End-shield clamp bolts shall have a threaded extension which extends a minimum of 0.38 inch beyond the nut.
4. The shaft extension shall be in accordance with MG 1-11.31.

Recommended Standard 1-25-1946, NEMA Standard 5-17-1953, revised 11-14-1957; 11-13-1958; 7-16-1975.

MG 1-18.139 Dimensions and Lettering of Dimensions for Motors for Shaft-mounted Fans and Blowers

See Fig. 1, 2, and 3 on pages 22 and 23.

Recommended Standard 1-25-1946, NEMA Standard 5-17-1953, revised 7-16-1975.

MG 1-18.140 Terminal Markings

See MG 1-18.213.

MG 1-18.141 Terminal Lead Lengths†

See MG 1-18.214.

Copyright National Electrical Manufacturers Association
Provided by IHS under license with NEMA
No reproduction or networking permitted without license from IHS
Not for Resale

9009279 0003489 6T4

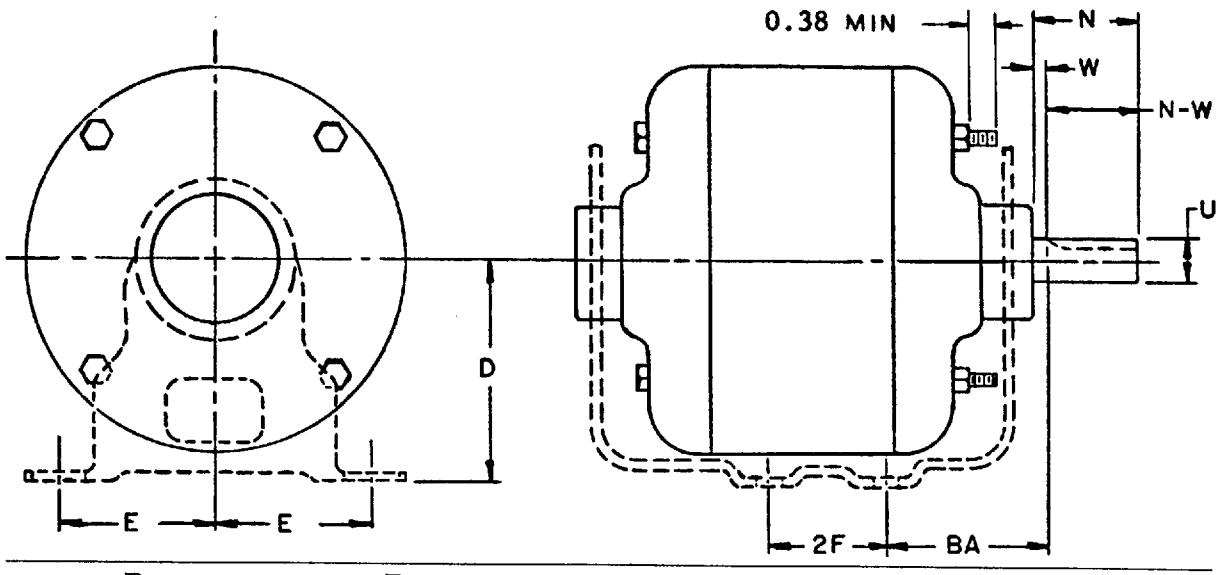

D	E	2F	BA
3.00	2.12	2.75 (1.69*)	2.50 (1.63*)
3.50	2.44	3.00 (1.69*)	2.75 (1.63*)

*Alternate dimension for mounting of short motors.

Fig. 1 of MG 1-18.139
Motors with Base

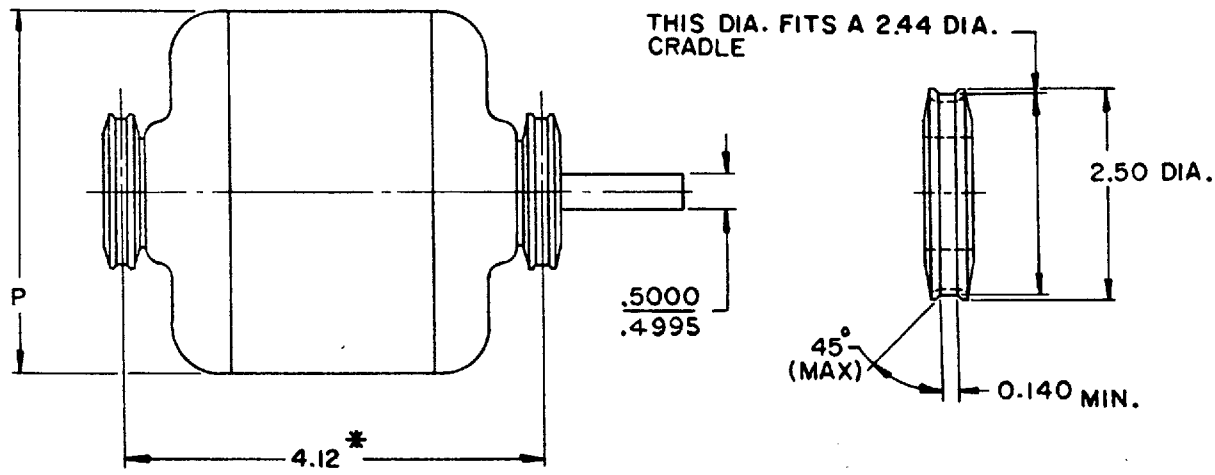

*When this dimension is greater or less than 4.12 inches, it shall vary in increments of 0.25 inch.

Fig. 2 of MG 1-18.139
Motors Without Base
(P Dimension 4.38 Inches and Larger)

Copyright National Electrical Manufacturers Association
Provided by IHS under license with NEMA
No reproduction or networking permitted without license from IHS
Not for Resale

9009279 0003490 316

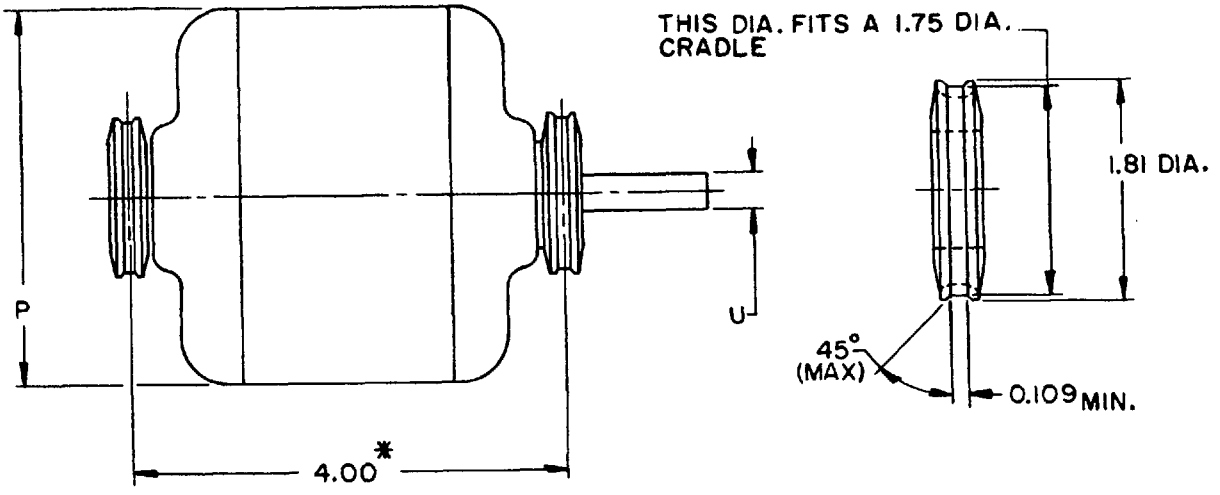

*When this dimension is greater or less than 4.00 inches, it shall vary in increments of 0.25 inch.

P, Inches	U, Inches
Over 3.5	0.3125
3.5 and smaller	Standard not yet developed

Fig. 3 of MG 1-18.139
Motors Without Base
(P Dimension Smaller Than 4.38 Inches)

Copyright National Electrical Manufacturers Association
Provided by IHS under license with NEMA
No reproduction or networking permitted without license from IHS
Not for Resale

9009279 0003491 252

Fractional-horsepower Motors for Belted Fans and Blowers Built in Frames 56 and Smaller

(Belted fan and blower motors are motors for operating belt-driven fans or blowers such as are commonly used in conjunction with hot-air-heating and refrigeration installations and attic ventilators.)

MG 1-18.176 Classification According to Electrical Type

1. Single and two speed.
   a. Split phase.
   b. Capacitor start.
   c. Polyphase.

Recommended Standard 6-11-1946, NEMA Standard 5-17-1953, revised 7-17-1973.

RATINGS

MG 1-18.177 Voltage Ratings

A. SINGLE PHASE

1. 60 hertz—115 and 230 volts.
2. 50 hertz—110 and 220 volts.

B. POLYPHASE

1. 60 hertz—200, 230 and 460 volts.
2. 50 hertz—220 and 380 volts.

Recommended Standard 6-11-1946, NEMA Standard 5-17-1953, revised 11-21-1968; 7-17-1973.

MG 1-18.178 Frequencies

Frequencies shall be 50 and 60 hertz.

Recommended Standard 6-11-1946, NEMA Standard 5-17-1953.

MG 1-18.179 Horsepower and Speed Ratings

Horsepower and speed ratings shall be as follows:

1. Single-speed motors.
   a. Speed ratings
      (1) 60 hertz—1800 rpm synchronous speed, 1725 rpm approximate full-load speed.
      (2) 50 hertz—1500 rpm synchronous speed, 1425 rpm approximate full-load speed.
   b. Horsepower ratings
      (1) Split-phase—1/6, 1/4, 1/3, 1/2 and 3/4 horsepower.
      (2) Capacitor-start—1/3, 1/2, 3/4 and 1 horsepower.
      (3) Polyphase—1/3, 1/2, 3/4 and 1 horsepower.
2. Two-speed motors.
   a. Speed ratings
      (1) 60 hertz—1800/1200 rpm synchronous speeds, 1725/1140 rpm approximate full-load speeds.
      (2) 50 hertz—1500/1000 rpm synchronous speeds, 1425/950 rpm approximate full-load speeds.
   b. Horsepower ratings
      (1) Split-phase—1/6, 1/4, 1/3, 1/2 and 3/4 horsepower at highest speed.
      (2) Capacitor-start—1/3, 1/2, 3/4 and 1 horsepower at highest speed.
      (3) Polyphase—1/3, 1/2, 3/4 and 1 horsepower at highest speed.

Recommended Standard 6-11-1946, NEMA Standard 5-17-1953, revised 11-12-1959; 7-17-1973.

TESTS AND PERFORMANCE

MG 1-18.180 Temperature Rise

Motors for belted fans and blowers shall have Class A or B insulation. The temperature rise above the temperature of the cooling medium shall be in accordance with MG 1-12.41.

Recommended Standard 6-11-1946, revised 11-15-1951, NEMA Standard 5-17-1953, revised 11-12-1959; 7-17-1973.

MG 1-18.181 Basis of Horsepower Rating

For single-phase induction motors, see MG 1-10.33.

MG 1-18.182 Maximum Locked-rotor Current

See MG 1-12.32 for single-phase motors and MG 1-12.34 for three-phase motors.

Copyright National Electrical Manufacturers Association
Provided by IHS under license with NEMA
No reproduction or networking permitted without license from IHS
Not for Resale

9009279 0003492 199

MG 1-18.183 High-potential Test

See MG 1-3.01, MG 1-12.03 and MG 1-12.03.a.

MG 1-18.184 Variation from Rated Voltage

See MG 1-12.43.

MG 1-18.185 Variation from Rated Frequency

See MG 1-12.44.

MG 1-18.186 Combined Variation of Voltage and Frequency

See MG 1-12.45.

MG 1-18.187 Direction of Rotation

Single-phase motors for belted fans and blowers shall be adaptable for either direction of rotation and shall be arranged for counter-clockwise rotation when facing the end opposite the drive.

Recommended Standard 6-11-1946, NEMA Standard 5-17-1953, revised 7-17-1973.

MANUFACTURING

MG 1-18.188 General Mechanical Features

Motors for belted fans and blowers shall have the following mechanical features (see MG 1-18.189):

1. Open or drip-proof.
2. Resilient mounting.
3. Automatic reset thermal overload protector.
4. Mounting dimensions and shaft extensions in accordance with MG 1-11.31.

Recommended Standard 6-11-1946, NEMA Standard 5-17-1953, revised 11-14-1957; 7-17-1973.

MG 1-18.189 Lettering of Dimensions for Motors for Belted Fans and Blowers

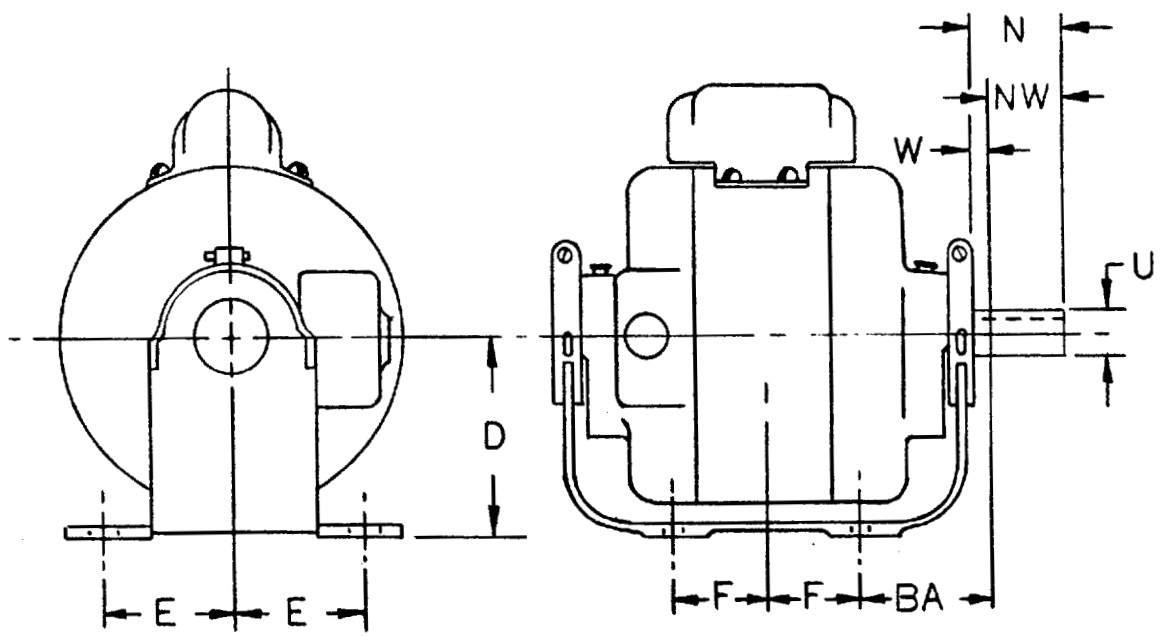

NOTE I—For meaning of letter dimensions, see MG 1-4.01.
NOTE II—For general mechanical features, see MG 1-18.188.

Recommended Standard 6-11-1946, NEMA Standard 5-17-1953, revised 7-17-1973.

Copyright National Electrical Manufacturers Association
Provided by IHS under license with NEMA
No reproduction or networking permitted without license from IHS
Not for Resale

9009279 0003493 025

Fractional-horsepower Motors for Air Conditioning Condensers and Evaporator Fans

MG 1-18.201 Classification According to Electrical Type

1. Shaded pole.
2. Permanent-split capacitor.

NEMA Standard 11-12-1959.

RATINGS

MG 1-18.202 Voltage Ratings

The voltage ratings of single-phase motors shall be:

1. 60 hertz—115, 200, 230 and 265 volts.
2. 50 hertz—110 and 220 volts.

NEMA Standard 11-12-1959, revised 11-21-1968; 11-13-1969; 11-14-1974; 9-25-1975.

MG 1-18.203 Frequencies

Frequencies shall be 60 and 50 hertz.

NEMA Standard 11-12-1959.

MG 1-18.204 Horsepower and Speed Ratings

A. HORSEPOWER RATINGS

1. Shaded-pole Motors—1/20, 1/15, 1/12, 1/10, 1/8 1/6, 1/5, 1/4 and 1/3 horsepower.
2. Permanent-split-capacitor Motors—1/20, 1/15, 1/12, 1/10, 1/8, 1/6, 1/5, 1/4, 1/3 and 1/2 horsepower.

B. SPEED RATINGS

60 Hertz		50 Hertz	
Synchronous Rpm	Approximate Full-load Rpm	Synchronous Rpm	Approximate Full-load Rm
1800	1550	1500	1300
1200	1050	1000	875
900	800		

NEMA Standard 11-14-1974.

TESTS AND PERFORMANCE

MG 1-18.205 Temperature Rise

Shaded-pole and permanent-split-capacitor motors for air conditioning condensers and evaporator fans shall have a Class A or B insulation system. The temperature rise above the temperature of the cooling medium shall be in accordance with MG 1-12.41.

NOTE I—See MG 1-1.65 for description of Class A and Class B insulation systems.
NOTE II—Where air flow is required over the motor from the driven fan in order not to exceed the values given in MG 1-12.41, the motor nameplate shall state "air over".

Suggested Standard for Future Design 11-12-1959, reaffirmed 8-19-1964, revised 11-12-1964, NEMA Standard 11-16-1967, revised 11-14-1974.

MG 1-18.206 Basis of Horsepower Rating

See MG 1-10.33, Table 10-2.

MG 1-18.207 High-potential Tests

See MG 1-3.01 and par. B of MG 1-12.03.

The high-potential test voltage for the compressor motor is frequently higher than that for the fan motor. In such cases, the high-potential test voltage applied to the air conditioning unit should be made without the fan motor being connected; or, if the fan motor has been connected, the high-potential test voltage applied to the air conditioning unit should not exceed 85 percent of the high-potential test voltage for the fan motor.

Authorized Engineering Information 11-12-1959.

MG 1-18.208 Variation from Rated Voltage

See MG 1-12.43.

MG 1-18.209 Variation from Rated Frequency

See MG 1-12.44.

MG 1-18.210 Combined Variation of Voltage and Frequency

See MG 1-12.45.

Copyright National Electrical Manufacturers Association
Provided by IHS under license with NEMA
No reproduction or networking permitted without license from IHS
Not for Resale

9009279 0003494 T61

MG 1-18.211 Variation from Rated Speed

The variation from specified operating speed for permanent-split capacitor motors shall not exceed plus or minus 20 percent of the difference between synchronous speed and the specified speed for operating speeds above 65 percent of synchronous speed.

The variation from specified operating speed for shaded-pole motors shall not exceed plus or minus 20 percent of the difference between synchronous speed and the specified operating speed for operating speeds above 85 percent of synchronous speed and shall not exceed plus or minus 30 percent of the difference between synchronous speed and the specified operating speed for operating speeds between 75 percent and 85 percent of synchronous speed.

In determining the variation from rated speed, the motor shall be tested with a fan which requires the specified torque at the specified operating speed. This variation in speed applies only to fans where the torque varies approximately as the square of the speed. The test for variation in specified operating speed shall be measured with rated voltage and frequency applied to the motor. The test shall be made after the motor windings have attained a temperature of 65°C or the operating temperature, whichever temperature is lower.

If capacitors, speed control, or other auxiliary devices are not provided by the motor manufacturer, nominal values of impedance for these devices shall be used during the test.

Suggested Standard for Future Design 11-12-1959, reaffirmed 8-19-1964, NEMA Standard 7-17-1968.

At operating speeds below the foregoing percentages of synchronous speeds, greater variations from the specified operating speed may be expected. At operating speeds much below the foregoing, starting performance, bearing life and speed variation are very likely to be unsatisfactory to the user.

Authorized Engineering Information 11-12-1959.

MG 1-18.212 Terminal Markings—Multispeed Shaded-pole Motors

See MG 1-18.213.

MANUFACTURING

MG 1-18.213 Terminal Markings

See pages 28 and 29.

MG 1-18.214 Terminal Lead Lengths

When shaded-pole and permanent-split capacitor motors are provided with terminal leads, the lead length shall be 12 inches, including 0.75 inch of bare wire at the end*.

* Where longer leads are required, the lead length shall vary in 3-inch increments up to 36 inches and in 6-inch increments for lengths over 36 inches.

Tolerances for leads shall be in accordance with the following:

	Tolerances, Inches	
	Plus	Minus
0.75 inch stripped length	0.06	0.06
12 to 36 inches, inclusive, lead lengths	2	0
Above 36 inches lead length	3	0

Suggested Standard for Future Design 11-12-1959, reaffirmed 8-19-1964, NEMA Standard 11-16-1967.

MG 1-18.215 General Mechanical Features

Shaded-pole and permanent-split capacitor motors shall be constructed with the following mechanical features:

1. Open or totally enclosed.
2. Sleeve or ball bearing.
3. Shaft extension and mounting dimensions in accordance with MG 1-18.216 through MG 1-18.218 and the following:
   a. Maximum shaft extension length shall be 8.00 inches.
   b. Maximum overall length of a shaft with double extensions shall be 20.00 inches.
   c. The tolerance for the permissible shaft runout, when measured at the end of the shaft extension (see MG 1-4.06), shall be 0.002-inch indicator reading on extensions up to 2.00 inches long with a 0.001-inch additional allowance for each 1.00-inch increment of the extension over the 2.00-inch length.

NEMA Standard 11-12-1959, revised 11-14-1974; 5-17-1976.

Copyright National Electrical Manufacturers Association
Provided by IHS under license with NEMA
No reproduction or networking permitted without license from IHS
Not for Resale

9009279 0003495 9T8

MG 1-18.213 Terminal Markings for Non-pole-changing Multispeed Single-voltage Nonreversible Permanent-split Capacitor Motors (Figures 1 through 5) and Shaded-pole Motors (Figure 6)

When multispeed single-voltage permanent-split capacitor or shaded-pole motors are provided with terminal leads, the leads shall be identified by the following terminal lead colors:

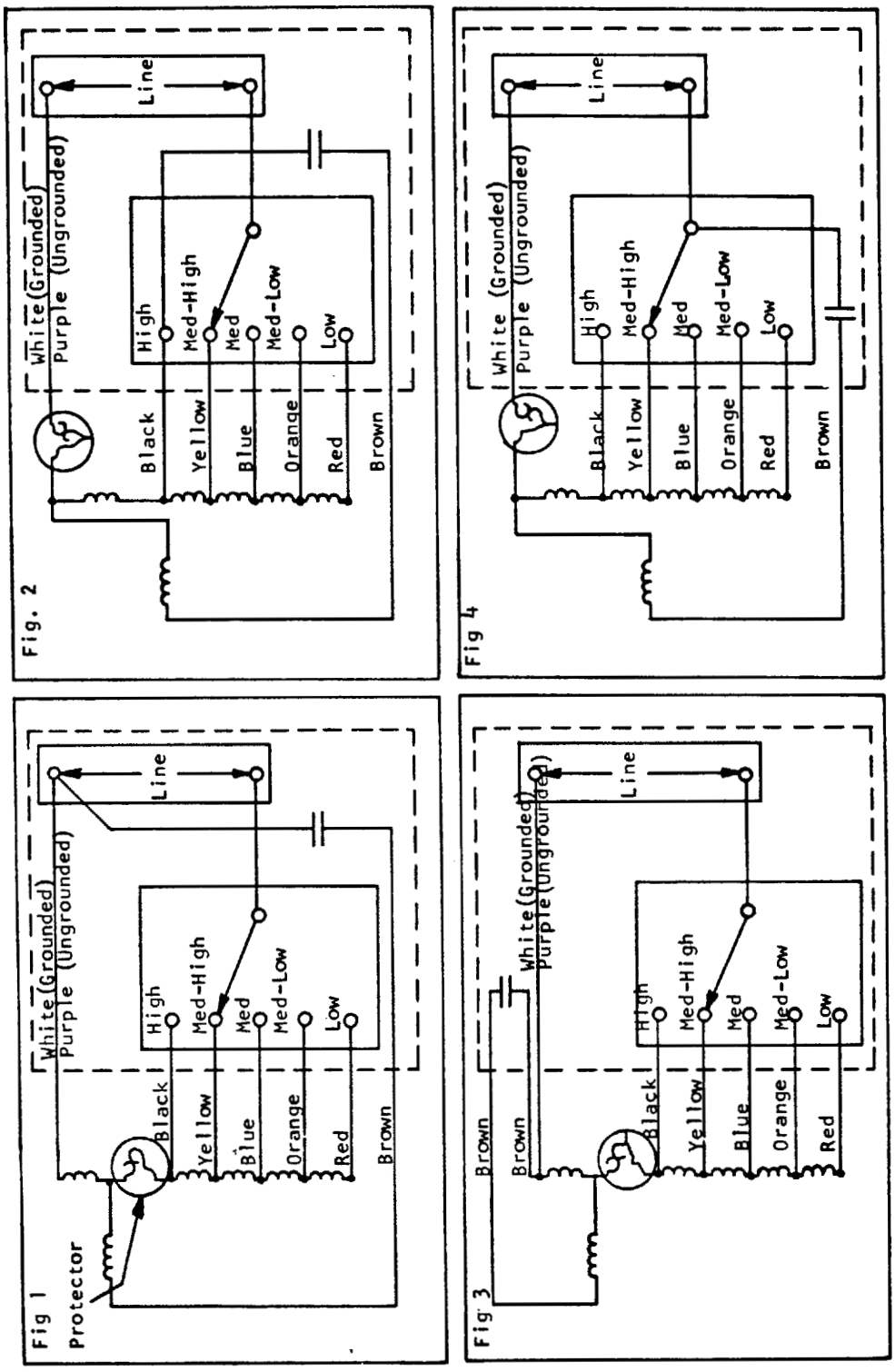

(Continued)

Copyright National Electrical Manufacturers Association
Provided by IHS under license with NEMA
No reproduction or networking permitted without license from IHS

Not for Resale

9009279 0003496 834

MG 1-18.213 *(Continued)*

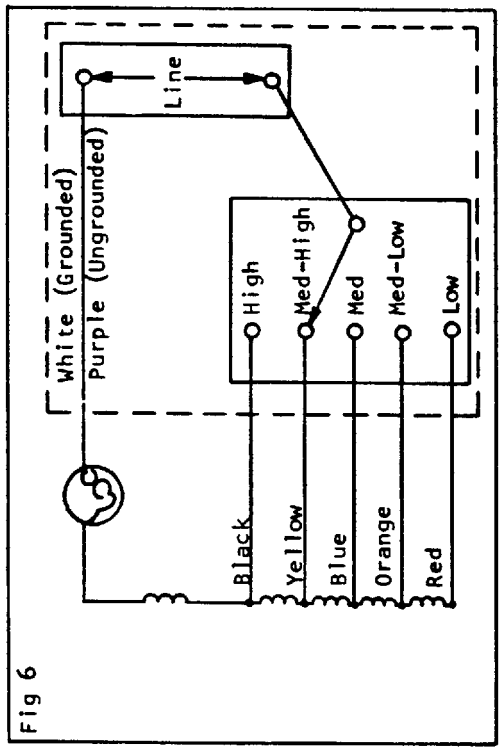

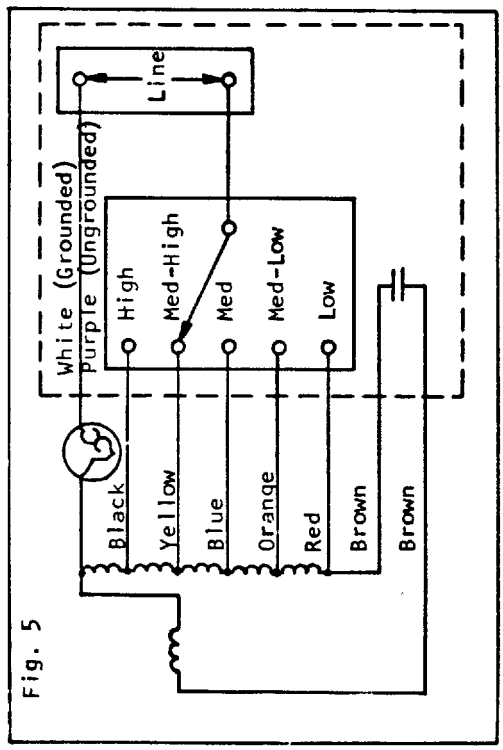

NOTE I—Parts shown within the dotted area are not a part of the motor. They are included in the diagram to clarify the motor terminal connections to be made by the user and should be displayed in a connection diagram on each individual motor.
NOTE II—The capacitor may or may not be mounted on the motor when two capacitor leads are provided.
NOTE III—In Figures 3 and 5, the electrical location of the auxiliary winding and capacitor may be reversed.
NOTE IV—When identification of capacitor leads is necessary, brown shall be used to identify the lead to be connected to the outer wrap of the capacitor and pink to identify the lead to be connected to the inner wrap.
NOTE V—Where the motor may see either a grounded or ungrounded common line lead, purple shall be used to identify the common line lead.
NOTE VI—In Figure 2, the auxiliary capacitor lead may be connected to any of the speed taps shown.
NOTE VII—For single-speed motors, use the colors specified for high speed.
For two-speed motors, use the colors specified for high and low speeds.
For three-speed motors, use the colors specified for high, medium and low speeds.
For four-speed motors, use the colors specified for high, medium-high, medium-low and low speeds.

Suggested Standard for Future Design 11-12-1959, revised 11-17-1960, 5-21-1962, NEMA Standard 7-7-1965, revised 11-14-1974.

Copyright National Electrical Manufacturers Association
Provided by IHS under license with NEMA
No reproduction or networking permitted without license from IHS
Not for Resale

9009279 0003497 770

MG 1-18.216 Dimensions of Shaded-pole and Permanent-split Capacitor Motors Having a P Dimension 4.38 Inches and Larger

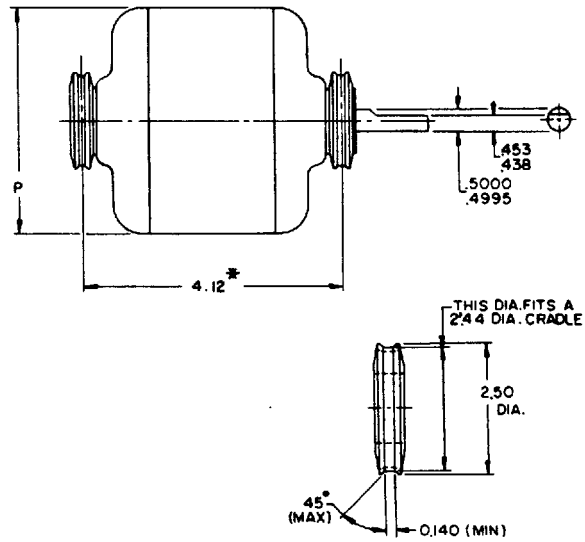

* When this dimension is greater or less than 4.12 inches, it shall vary in increments of 0.25 inch.

Suggested Standard for Future Design 11-12-1959, reaffirmed 8-19-1964, NEMA Standard 11-16-1967, revised 11-14-1974.

NOTE—The shaft extension length should be in 0.25-inch increments. For motors with double shaft extensions, the overall length of the shaft should also be in 0.25-inch increments. For motors having shaft extensions of 3.00 inches and longer, the recommended maximum usable length of flat is 2.50 inches.

Authorized Engineering Information 11-12-1959, revised 11-14-1974.

Copyright National Electrical Manufacturers Association
Provided by IHS under license with NEMA
No reproduction or networking permitted without license from IHS

Not for Resale

Copyright National Electrical Manufacturers Association
Provided by IHS under license with NEMA
No reproduction or networking permitted without license from IHS
Not for Resale

9009279 0003498 607

MG 1-18.217 Dimensions of Shaded-pole and Permanent-split Capacitor Motors Having a P Dimension Smaller than 4.38 Inches

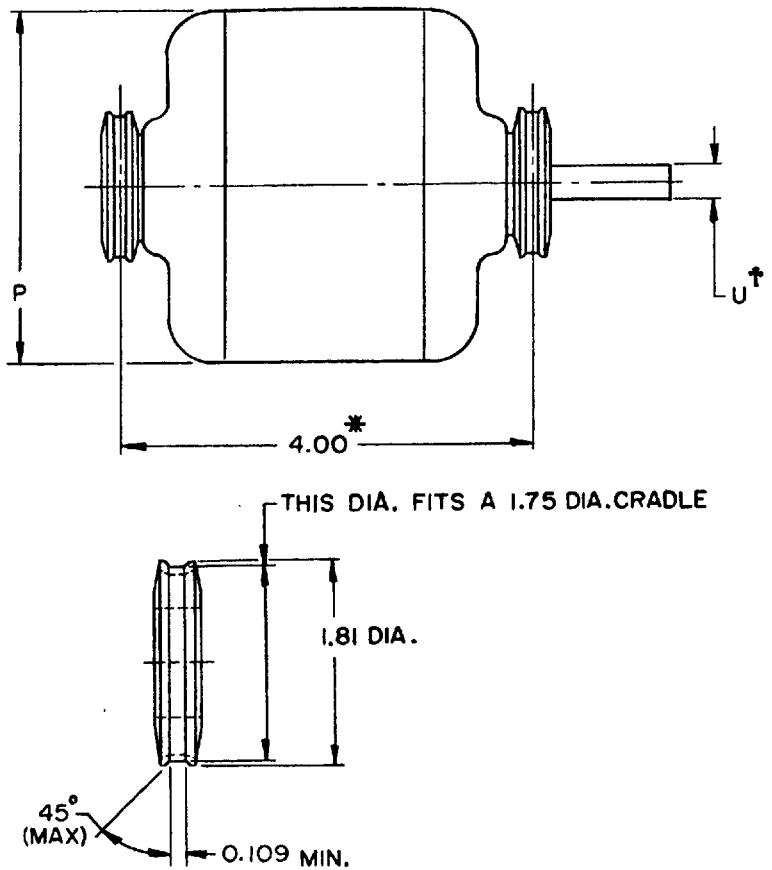

* When this dimension is greater or less than 4.00 inches, it shall vary in increments of 0.25 inch.

† For motors having a P dimension less than 4.38 inches down to but not including 3.50 inches, the U dimension shall be 0.3125 inch.

Suggested Standard for Future Design 11-12-1959, reaffirmed 8-19-1964, NEMA Standard 11-16-1967.

▲ Revised (reaffirmation).

MG 1-18.218 Dimensions for Lug Mounting for Shaded-pole and Permanent-split Capacitor Motors▲

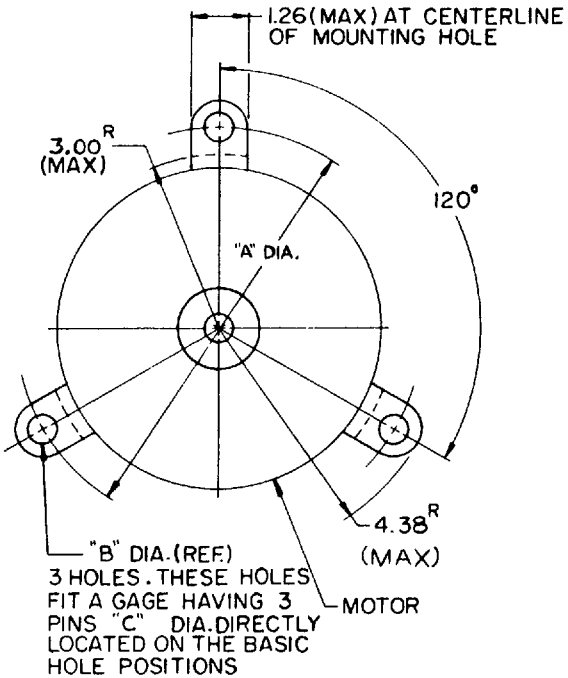

A Hole Circle Diameter	B Hole Diameter*	C Gag Pin Diameter
7.00	0.410	0.330
7.25	0.280	0.200
7.38	0.750	0.661
7.50	0.750	0.661

* Typical examples of diameters for these mounting holes.

All dimensions in inches.

Suggested Standard for Future Design 7-12-1961, reaffirmed 1-13-1965; 7-17-1968, revised 11-14-1974, reaffirmed 3-19-1980.

9009279 0003499 543

APPLICATION DATA

MG 1-18.219 Nameplate Current

The input current of shaded-pole and permanent-split capacitor motors, when operating at rated load or rated speed with rated voltage and frequency applied, can be expected to vary plus or minus 10 percent from the average value for the particular motor design. Since usual practice is to mark motor nameplates with rated currents approximately 5 percent above the average full-load values, some motors may be expected to have input currents 5 percent greater than the nameplate value. In those cases where the capacitors are not provided by the motor manufacturer, larger tolerances in input current may be expected.

Authorized Engineering Information 11-12-1959, revised 11-14-1974.

MG 1-18.220 Effect of Variation from Rated Voltage upon Operating Speed

The effect of variation from rated voltage upon the operating speed of typical designs of shaded-pole and permanent-split capacitor motors used for fan drives is shown by speed-torque curves in Figures 1 and 2, respectively. In each set of curves the solid curve intersecting the 0 torque axis near 100 percent of synchronous speed illustrates the speed-torque characteristic of an average motor of a typical design. The dashed curves enveloping the solid curve illustrate the variation in speed-torque characteristics of the typical motor design when tested at rated voltage and frequency. The dot-dash curves illustrate the variation in speed-torque characteristics within plus and minus 10 percent variation in line voltage for motors of the typical design when operated at rated frequency.

In order to illustrate the variation in motor speed when driving a specified fan, a family of typical fan speed-torque curves are shown, intersecting the typical average motor speed-torque curve at operating speeds of 95, 90, 85, 80, 75 and 70 percent of synchronous speed.

A study of the curves shows that, when the operating speed is too low a percentage of synchronous speed, extremely wide variations in operating speed of motors of a particular design may be expected within the plus and minus 10 percent variation from rated voltage that may be encountered in service. Variation in air flow characteristics of the fan of a particular design are not included.

Care must be exercised in applying the motor and fan to an air conditioner application, particularly where two- or three-speed operation is desired, so that the operating speed is kept within the range where tolerable starting characteristics and variations in operating speed may be obtained. Close cooperation among the motor manufacturer, fan manufacturer and air conditioner manufacturer is recommended.

Authorized Engineering Information 11-12-1959.

MG 1-18.221 Insulation Testing

Motors for air conditioner condenser and evaporator fans are subjected to unusual application conditions requiring special care in the testing of insulation systems.

A. Test Conditions

(1) One general class of test conditions results in liquid water remaining in the motor or on the windings. This tends to produce erratic and non-repeatable results due to variations in actual contact of water drops with weak or damaged spots in the insulation system. In testing, the motor must be electrically disconnected from all other components of the air conditioning unit and connected to a separate power source. Where short-time tests of this type are used, it should be recognized that they may adequately detect weak or damaged insulation systems, but they are of doubtful significance in measuring the effect of long-time exposure of a particular system to moisture.

(2) The second general class of test conditions subjects the motor to high humidity without liquid water being present. This type of test, when conducted over longer periods of time, is more indicative of the relative life expectancy of various motor insulation systems, as they are more uniformly exposed to the deteriorating conditions. To be significant, these tests should be conducted at close to 100 percent relative humidity and continued as long as practicable. Testing time may be shortened by increasing the ambient temperature.

B. Test Method

IEEE Std 117, *Test Procedure for Evaluation of Systems of Insulating Materials for Random-wound AC Electric Machinery,* describes a suitable test method for evaluating insulation systems. Due to environmental conditions experienced in certain air conditioner applications, it may be desirable to modify the humidity, temperature, contaminates, and vibration specified in IEEE Std 117 to suit known application conditions.

It must be recognized that test conditions and methods of measuring the effects of short-time accelerated insulation tests result in only comparative data between different designs or insulation systems. Extended life tests in the air conditioner under actual service conditions on at least one motor design are necessary to relate test results to actual life.

When comparing insulation systems by any test, a method of determining the end point of the life of the system must be established. The repetitive surge test described in IEEE Std 117 between windings and between windings and ground is a suitable test for this purpose.

Copyright National Electrical Manufacturers Association
Provided by IHS under license with NEMA
No reproduction or networking permitted without license from IHS
Not for Resale

9009279 0003500 095

Neither a direct-current insulation resistance test nor an alternating-current leakage current test give dependable comparisons between insulation systems in determining the end point in life under test conditions and should not be used for this purpose. The measurements may provide an indication of deterioration of a particular insulation system under test or in service, but comparisons of absolute values are frequently misleading. Measurement of alternating-current leakage current to ground is a check of shock hazard conditions. It is used as such in some testing laboratory specifications.

Authorized Engineering Information 11-12-1959.

MG 1-18.222 Service Conditions

Motors for air conditioning condenser and evaporator fans are subjected to environmental conditions such as high humidity, high and low ambient temperatures, water from condensate or rain, and salt air. Extreme care should be used in the proper application of these motors in order that successful operation and good service will result. The following factors should be considered:

1. The motor should be enclosed or adequately shielded to prevent splashing of condensate or rain water into the motor. The wiring to the motor should be arranged to prevent water on the wires from draining into the motor enclosure.
2. The flow of air through the air conditioning unit should be controlled to minimize carrying excessive amounts of moisture or rain over and into the motor.
3. The air conditioning unit should be designed to prevent the possibility of water entering the motor lubrication system.
4. When the ambient temperature of the motor is higher than 40 °C for long periods of time, the motor must be de-rated or abnormal deterioration of the insulation may be expected.
5. When the motor ambient temperature is below 10 °C, particular care must be given to the motor starting characteristics and bearing lubricant.
6. Speed stability of air conditioning fan motors may be poor when operating at low speeds. See MG 1-18.211 for variations to be expected in motor speeds.

Authorized Engineering Information 11-12-1959.

Copyright National Electrical Manufacturers Association
Provided by IHS under license with NEMA
No reproduction or networking permitted without license from IHS

Not for Resale

9009279 0003501 T21



NOTE—Fan load based upon nominal speed-torque curve.

FIG. 1 of MG 1-18.220

Typical Shaded-pole Speed-torque Curve Showing Expected Speed Variation due to Manufacturing and Voltage Variations

Copyright National Electrical Manufacturers Association
Provided by IHS under license with NEMA
No reproduction or networking permitted without license from IHS

Not for Resale

9009279 0003502 968

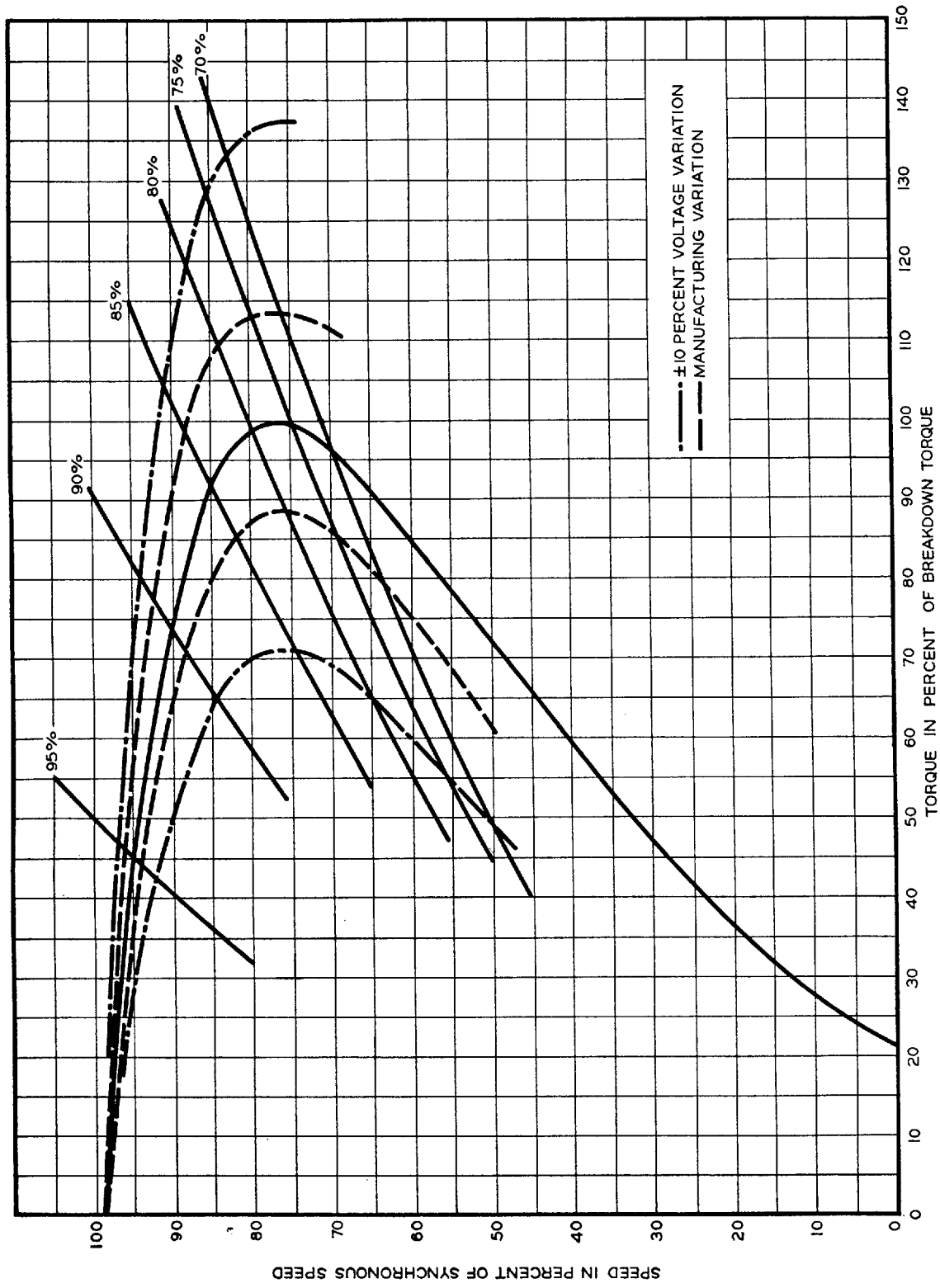

NOTE—Fan load based upon nominal speed-torque curve.

FIG. 2 of MG 1-18.220

Typical Permanent-split Capacitor Speed-torque Curve Showing Expected Speed Variation due to Manufacturing and Voltage Variations

Copyright National Electrical Manufacturers Association
Provided by IHS under license with NEMA
No reproduction or networking permitted without license from IHS

Not for Resale

9009279 0003503 8T4

Fractional-horsepower Motors for Sump Pumps

(A sump pump motor is one which furnishes power for operating a pump used for draining basements, pits or sumps.)

MG 1-18.226 Classification According to Electrical Type

1. Single phase—Split-phase.

Recommended Standard 6-11-1946; NEMA Standard 5-17-1953, Suggested Standard for Future Design 11-12-1959, NEMA Standard 8-19-1964.

RATINGS

MG 1-18.227 Voltage Ratings

The voltage ratings of single-phase motors shall be:

1. 60 hertz—115 and 230 volts.
2. 50 hertz—110 and 220 volts.

Recommended Standard 6-11-1946, NEMA Standard 5-17-1953, Suggested Standard for Future Design 11-12-1959, NEMA Standard 8-19-1964, revised 11-21-1968.

MG 1-18.228 Frequencies

Frequencies shall be 50 and 60 hertz.

Recommended Standard 6-11-1946; NEMA Standard 5-17-1953, revised 11-11-1954.

MG 1-18.229 Horsepower and Speed Ratings

A. Horsepower rating shall be ¼, ⅓ and ½ horsepower.

B. Full-load speed ratings shall be:

1. 60 hertz—1800 rpm synchronous speed, 1725 rpm approximate full-load speed.
2. 50 hertz—1500 rpm synchronous speed, 1425 rpm approximate full-load speed.

Recommended Standard 6-11-1946; NEMA Standard 5-17-1953, revised 11-11-1954, Suggested Standard for Future Design 11-12-1959, NEMA Standard 8-19-1964, revised 3-22-1972.

TESTS AND PERFORMANCE

MG 1-18.230 Temperature Rise

Sump pump motors shall have either Class A or Class B insulation. The temperature rise above the temperature of the cooling medium for each of the various parts of the motor, when tested in accordance with the rating, shall not exceed the following values:

CLASS OF INSULATION.....	A	B
COIL WINDINGS, DEGREES C		
Single Phase		
Thermometer.....	50	70
Resistance.....	60	80

SQUIRREL-CAGE WINDINGS SHALL NOT ATTAIN SUCH TEMPERATURES AS WILL OCCASION MECHANICAL INJURY TO THE MACHINE.

Recommended Standard 6-11-1946; NEMA Standard 5-17-1953, Suggested Standard for Future Design 11-12-1959, NEMA Standard 8-19-1964, revised 3-22-1972.

MG 1-18.231 Basis of Horsepower Rating

Ratings of single-phase induction motors shall be in accordance with MG 1-10.33.

NEMA Standard 1-26-1948, Suggested Standard for Future Design 11-12-1959, NEMA Standard 8-19-1964.

MG 1-18.232 Torque Characteristics

For 60-hertz motors, the breakdown and locked-rotor torques (see MG 1-1.49) shall be not less than the following:

Hp	Torque, Oz-ft	
	Breakdown	Locked Rotor
¼	21.5	14.0
⅓	31.5	20.0
½	40.5	20.0

The temperature of the motor at the start of the test shall be approximately 25°C.

Recommended Standard 6-11-1946; NEMA Standard 5-17-1953, Suggested Standard for Future Design 11-12-1959, NEMA Standard 8-19-1964, revised 3-22-1972.

MG 1-18.233 High-potential Tests

See MG 1-3.01 and MG 1-12.03.

Copyright National Electrical Manufacturers Association
Provided by IHS under license with NEMA
No reproduction or networking permitted without license from IHS
Not for Resale

9009279 0003504 730

MG 1-18.234 Variation from Rated Voltage

See MG 1-12.43.

MG 1-18.235 Variation from Rated Frequency

See MG 1-12.44.

MG 1-18.236 Combined Variation of Voltage and Frequency

See MG 1-12.45.

MG 1-18.237 Direction of Rotation

The direction of rotation for sump pump motors shall be clockwise facing the end opposite the drive.

Recommended Standard 6-11-1946; NEMA Standard 5-17-1953, Suggested Standard for Future Design 11-12-1959, NEMA Standard 8-19-1964, revised 3-22-1972.

MANUFACTURING

MG 1-18.238 General Mechanical Features

Sump pump motors shall be constructed with the following mechanical features (see MG 1-18.239):

1. Open construction. Top end bracket to be totally enclosed or to have ventilating openings protected by louvers, or the equivalent.
2. Bearings shall be suitable for vertical operation.
3. Bottom end bracket to have hub machined for direct mounting on support pipe.
4. Motors may be equipped with automatic thermal protector.
5. Motor frame shall have provision for connection of ground lead.
6. When provided, supply cords shall be at least a three-conductor 18 AWG cord.

Recommended Standard 6-11-1946; NEMA Standard 5-17-1953, Suggested Standard for Future Design 11-12-1959, reaffirmed 8-19-1964, NEMA Standard 11-16-1967, revised 3-22-1972; 5-17-1972.

Copyright National Electrical Manufacturers Association
Provided by IHS under license with NEMA
No reproduction or networking permitted without license from IHS
Not for Resale

9009279 0003505 677

MG 1-18.239 Dimensions for Sump Pump Motors, Type K

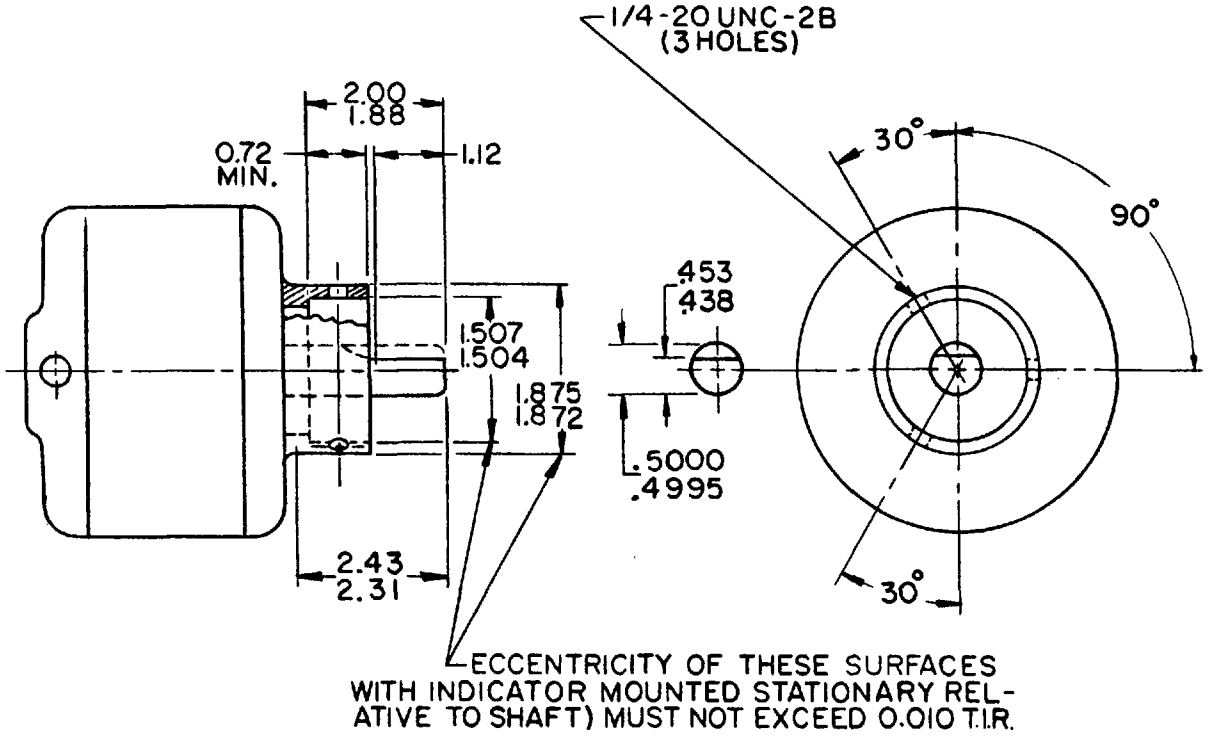

All dimensions in inches.

Recommended Standard 6-11-1946, NEMA Standard 5-17-1953, revised 11-11-1954, Suggested Standard for Future Design 11-12-1949, revised 5-24-1960, reaffirmed 8-19-1964, revised 11-21-1968, NEMA Standard 3-22-1972.

MG 1-18.240 Frame Number and Frame Suffix Letter

When a motor built in a frame given in MG 1-11.31 is designed in accordance with the standards for sump pump motors, the frame number shall be followed by the suffix letter K to indicate such construction. Sump pump motors are normally built in 48 or 56 frame sizes.

Recommended Standard 11-17-1949, NEMA Standard 5-17-1953, Suggested Standard for Future Design 11-12-1959, NEMA Standard 8-19-1964, revised 3-22-1972.

Copyright National Electrical Manufacturers Association
Provided by IHS under license with NEMA
No reproduction or networking permitted without license from IHS
Not for Resale

9009279 0003506 503

Fractional-horsepower Motors for Gasoline Dispensing Pumps

(A motor of Class I, Group D explosion-proof construction as approved by Underwriters Laboratories Inc. for belt or direct-coupled drive of gasoline dispensing pumps of the size commonly used in automobile service stations.)

MG 1-18.251 Classification According to Electrical Type

1. Single phase.
   a. Capacitor start.
   b. Repulsion-start induction.
2. Polyphase.
   Squirrel cage, constant speed.

Recommended Standard 6-11-1946, NEMA Standard 5-17-1953, revised 1-25-1973.

RATINGS

MG 1-18.252 Voltage Ratings

A. SINGLE-PHASE MOTORS
1. 60 hertz—115/230 volts.
2. 50 hertz—110/220 volts.

B. POLYPHASE INDUCTION MOTORS
1. 60 hertz—200 and 230 volts.
2. 50 hertz—220 volts.

Recommended Standard 6-11-1946, NEMA Standard 5-17-1953, revised 11-21-1968; 7-16-1969; 1-25-1973.

MG 1-18.253 Frequencies

Frequencies shall be 50 and 60 hertz.

Recommended Standard 6-11-1946, NEMA Standard 5-17-1953, revised 11-11-1954.

MG 1-18.254 Horsepower and Speed Ratings

A. The horsepower rating shall be ⅓, ½ and ¾ horsepower.

B. Speed ratings shall be:
1. 60 hertz—1800 rpm synchronous speed, 1725 rpm approximate full-load speed.
2. 50 hertz—1500 rpm synchronous speed, 1425 rpm approximate full-load speed.

Recommended Standard 6-11-1946, NEMA Standard 5-17-1953, revised 11-11-1954; 11-12-1959; 1-25-1973.

TESTS AND PERFORMANCE

MG 1-18.255 Temperature Rise

Gasoline dispensing pump motors shall have Class A insulation. They shall be rated 30 minutes or continuous, and the temperature rise above the temperature of the cooling medium for each of the various parts of the motor, when tested in accordance with the rating, shall not exceed the following values:

COIL WINDINGS, DEGREES C	
Single phase and polyphase	
Thermometer	55
Resistance	65

SQUIRREL-CAGE WINDINGS SHALL NOT ATTAIN SUCH TEMPERATURES AS WILL OCCASION MECHANICAL INJURY TO THE MACHINE.

NOTE I—See MG 1-1.65 for description of classes of insulation.
NOTE II—All temperature rises are based on an ambient temperature of 40°C. Abnormal deterioration of insulation may be expected if this ambient temperature is exceeded in regular operation.

Recommended Standard 6-11-1946, revised 11-15-1951, NEMA Standard 5-17-1953, revised 11-12-1959; 1-25-1973.

MG 1-18.256 Basis of Horsepower Rating

The horsepower rating of single-phase motors is based upon breakdown torque (see MG 1-1.49). For fractional-horsepower motors for gasoline dispensing pumps, the value of breakdown torque to be expected by the user for any horsepower shall fall within the range given in the following table:

Hp	Torque, Oz-ft	
	115 Volts 60 Hertz	110 Volts 50 Hertz
⅓	46.0–53.0	55.0–64.0
½	53.0–73.0	64.0–88.0
¾	73.0–100.0	88.0–120.0

The minimum value of breakdown torque obtained in the manufacture of any design will determine the rating of that design. Tolerances in manufacturing will result in individual motors having breakdown torque from 100 percent to approximately 115 percent of the value on which the rating is based, but this excess torque shall not be relied upon by the user in applying the motor to its load.

Copyright National Electrical Manufacturers Association
Provided by IHS under license with NEMA
No reproduction or networking permitted without license from IHS
Not for Resale

9009279 0003507 44T

The temperature of the motor at the start of the test shall be approximately 25°C.

NEMA Standard 1-26-1948, revised 1-25-1973; 11-8-1973.

MG 1-18.257 Locked-rotor Torque

The locked-rotor torque (see MG 1-1.47) of single-phase fractional-horsepower motors for gasoline dispensing pumps shall be not less than those shown in the following table:

Hp	Torque, Oz-ft	
	115 Volts 60 Hertz	110 Volts 50 Hertz
1/3	46.0	55.0
1/2	61.0	73.0
3/4	84.0	101.0

The temperature of the motor at the start of the test shall be approximately 25°C.

Recommended Standard 6-11-1946, NEMA Standard 5-17-1953, revised 1-25-1973; 11-8-1973.

MG 1-18.258 Locked-rotor Current

See MG 1-12.32 for Design N motors.

MG 1-18.259 High-potential Test

See MG 1-3.01 and MG 1-12.03.

MG 1-18.260 Variation from Rated Voltage

See MG 1-12.43.

MG 1-18.261 Variation from Rated Frequency

See MG 1-12.44.

MG 1-18.262 Combined Variation of Voltage and Frequency

See MG 1-12.45.

MG 1-18.263 Direction of Rotation

The direction of rotation shall be clockwise facing the end opposite the drive.

Recommended Standard 6-11-1946, NEMA Standard 5-17-1953.

MANUFACTURING

MG 1-18.264 General Mechanical Features

Gasoline dispensing pump motors shall be constructed with the following mechanical features (see MG 1-18.265):

1. Totally enclosed, explosion proof, Class I, Group D.
2. Rigid base mounting.
3. Built-in line switch and operating lever (optional).
4. A motor that may exceed its maximum safe temperature under any operating condition (including locked rotor and single phasing) shall be provided with a temperature-limiting device within the motor enclosure. The temperature-limiting device shall not open under full-load conditions within its time rating and shall prevent dangerous temperatures occurring on the exterior surface of the rotor enclosure with respect to ignition of the explosion atmosphere involved. The maximum safe temperature is 280°C (536°F) for Class I Group D. The temperature-limiting device shall open the motor circuit directly.
5. Voltage selector switch built in on the same end as the swivel connector on single-phase motors.
6. Line leads 36 inches long brought out through the swivel connector.
7. Swivel connector and line switch may be furnished in locations 90 and 180 degrees from that shown in MG 1-18.265.

Recommended Standard 6-11-1946, NEMA Standard 5-17-1953, revised 11-12-1953; 1-25-1973.

MG 1-18.265 Dimensions for Gasoline-dispensing Pump Motors, Type G

See Part 18, page 41.

Recommended Standard 6-11-1946, Suggested Standard for Future Design 1-22-1954, revised 11-11-1954, NEMA Standard 6-30-1958, revised 9-20-1972; 1-25-1973.

MG 1-18.266 Frame Number and Frame Suffix Letter

When a motor having the dimensions given in MG 1-18.265 is designated in accordance with the standards for gasoline dispensing pump motors, the frame number shall be followed by the letter G.

Recommended Standard 11-17-1949, NEMA Standard 5-17-1953, revised 1-21-1964; 1-25-1973.

Copyright National Electrical Manufacturers Association
Provided by IHS under license with NEMA
No reproduction or networking permitted without license from IHS
Not for Resale

9009279 0003508 386

MG 1-18.265 Dimensions for Gasoline-dispensing Pump Motors, Type G

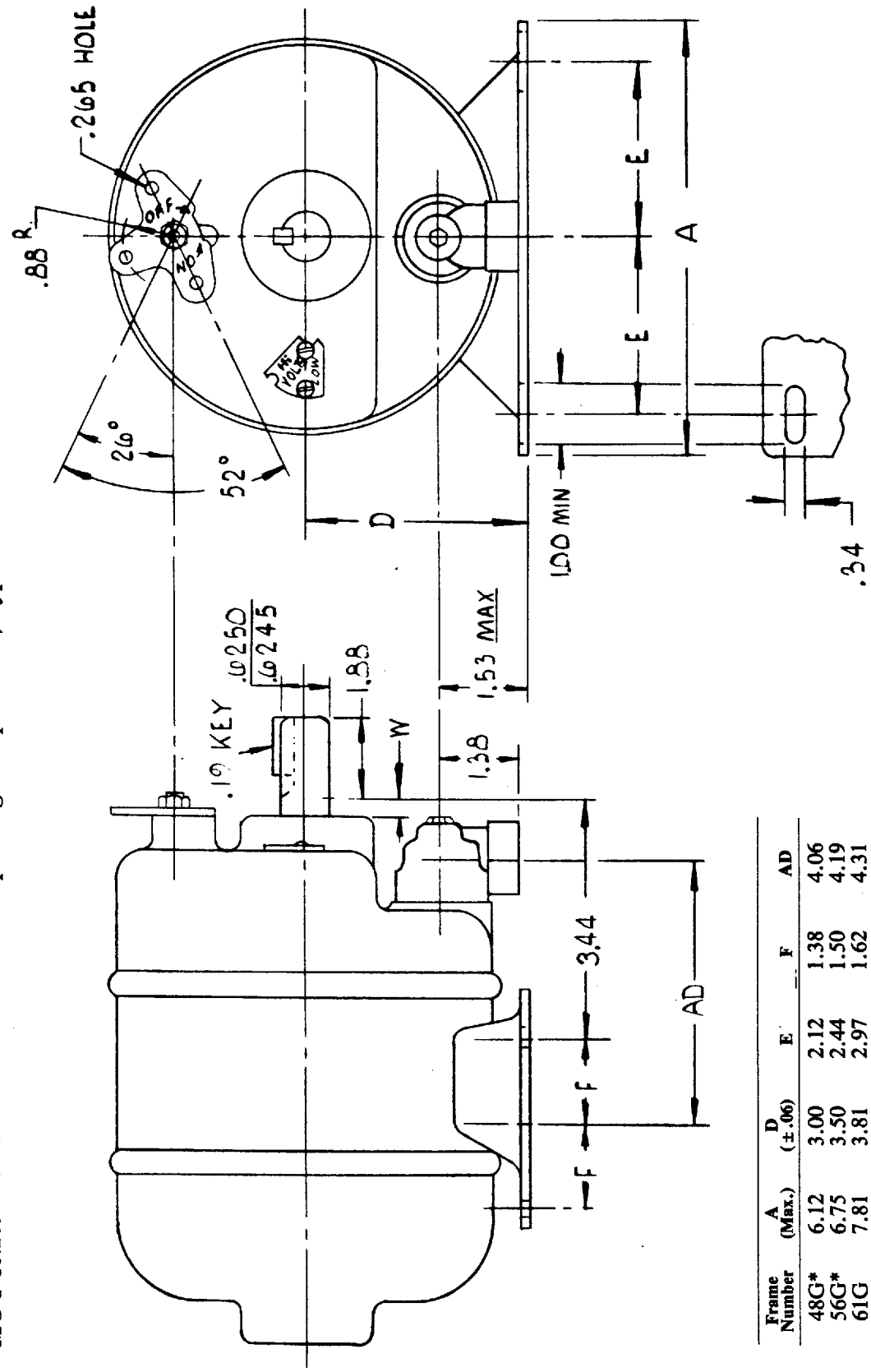

Frame Number	A (Max.)	D (±.06)	E	F	AD
48G*	6.12	3.00	2.12	1.38	4.06
56G*	6.75	3.50	2.44	1.50	4.19
61G	7.81	3.81	2.97	1.62	4.31

* Approved as Suggested Standard for Future Design.

All dimensions in inches.

NOTE—For tolerances on shaft extension diameters and keyseats, see MG 1-4.05.

Copyright National Electrical Manufacturers Association
Provided by IHS under license with NEMA
No reproduction or networking permitted without license from IHS

Not for Resale

9009279 0003509 212

Fractional-horsepower Motors for Oil Burners

(A motor for operating mechanical-draft oil burners for domestic installations.)

MG 1-18.276 Classification According to Electrical Type

Single phase—Split phase.

Recommended Standard 6-11-1946, NEMA Standard 11-12-1953.

RATINGS

MG 1-18.277 Voltage Ratings

The voltage ratings of single-phase motors shall be:

1. 60 hertz—115 and 230 volts.
2. 50 hertz—110 and 220 volts.

Recommended Standard 6-11-1946, NEMA Standard 11-12-1953, revised 11-21-1968.

MG 1-18.278 Frequencies

Frequencies shall be 50 and 60 hertz.

Recommended Standard 6-11-1946; NEMA Standard 11-12-1953, revised 11-11-1954.

MG 1-18.279 Horsepower and Speed Ratings

A. The horsepower ratings shall be 1/12, 1/8 and 1/6 horsepower.

B. Speed ratings shall be:

1. 60 hertz—1800 and 3600 rpm synchronous speed, 1725 and 3450 rpm approximate full-load speed.
2. 50 hertz—1500 and 3000 rpm synchronous speed, 1425 and 2850 rpm approximate full-load speed.

Recommended Standard 6-11-1946; NEMA Standard 11-12-1953, revised 11-11-1954; 11-12-1959; 9-20-1972.

TESTS AND PERFORMANCE

MG 1-18.280 Temperature Rise

Oil-burner motors shall have either Class A or Class B insulation. The temperature rise above the temperature of the cooling medium for each of the various parts of the motor, when tested in accordance with the rating, shall not exceed the following values:

CLASS OF INSULATION	A	B
COIL WINDINGS, DEGREES C*		
Guarded Motors		
Thermometer	50	70
Resistance	60	80
Totally-enclosed Motors		
Thermometer	55	75
Resistance	65	85

SQUIRREL-CAGE WINDINGS SHALL NOT ATTAIN SUCH TEMPERATURES AS WILL OCCASION MECHANICAL INJURY TO THE MACHINE.

* Where two methods of temperature measurement are listed, a temperature rise within the values listed in the table, measured by either method, demonstrates conformity with the standard.

NOTE I—See MG 1-1.65 for description of classes of insulation.
NOTE II—All temperature rises are based on an ambient temperature of 40°C. Abnormal deterioration of insulation may be expected if this ambient temperature is exceeded in regular operation.

Recommended Standard 6-11-1946, revised 11-15-1951, NEMA Standard 11-12-1953, revised 11-12-1959; 9-20-1972.

MG 1-18.281 Basis of Horsepower Rating

For single-phase induction motors, see MG 1-10.33.

NEMA Standard 1-26-1948.

MG 1-18.282 Locked-rotor Characteristics

The locked-rotor torque (see MG 1-1.47) and locked-rotor current (see MG 1-1.52) of 60-hertz motors, with rated voltage and frequency applied, shall be in accordance with the following table:

Hp	Minimum Torque, Oz-ft	Maximum Current Amperes*
	1800 Rpm	
1/12	7.0	20.0
1/8	10.0	23.0
1/6	12.0	25.0
	3600 Rpm	
1/12	4.0	20.0
1/8	6.0	22.0
1/6	7.0	24.0

* 115-volt values.

NEMA Standard 9-20-1972.

Copyright National Electrical Manufacturers Association
Provided by IHS under license with NEMA
No reproduction or networking permitted without license from IHS
Not for Resale

9009279 0003510 T34

MG 1-18.283 High-potential Test

See MG 1-3.01 and MG 1-12.03.

MG 1-18.284 Variation from Rated Voltage

See MG 1-12.43.

MG 1-18.285 Variation from Rated Frequency

See MG 1-12.44.

MG 1-18.286 Combined Variation of Voltage and Frequency

See MG 1-12.45.

MG 1-18.287 Direction of Rotation

The direction of rotation of oil burner motors shall be clockwise facing the end opposite the drive.

Recommended Standard 6-11-1946, NEMA Standard 11-12-1953.

MANUFACTURING

MG 1-18.288 General Mechanical Features

Oil burner motors shall be constructed with the following mechanical features (see MG 1-18.289):

1. Guarded or totally enclosed.
2. Motors to be supplied with nameplate in accordance with MG 1-10.37 and in addition marked with the words "oil burner motor."
3. Motors are to be equipped with manual reset inherent thermal overload protector provided with suitable marking to so indicate and with directions for resetting.
4. Motors shall be supplied with:
   a. Terminal leads consisting of two 20-inch lengths of flexible single-conductor wire which enter the enclosure through a hole tapped for ½-inch conduit located at 3 o'clock facing the end of the motor opposite the drive, or
   b. A 12-inch maximum length of two-wire 18 AWG Type SO cable brought out of the enclosure at 5 o'clock facing the end of the motor opposite the drive.

Recommended Standard 6-11-1946, revised 11-17-1949; 6-22-1950, NEMA Standard 11-12-1953, revised 9-20-1972.

MG 1-18.289 Dimensions for Face-mounted Motors for Oil Burners, Types M and N†

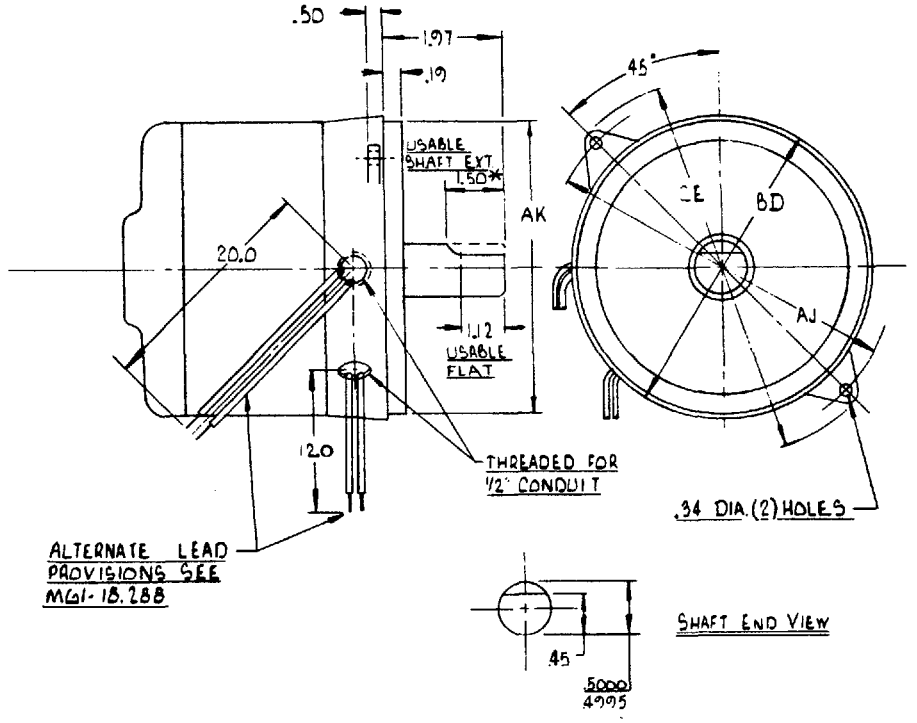

All dimensions in inches.

* If the shaft extension length of the motor is not suitable for the application, it is recommended that deviations from this length be in 0.25 inch increments.
† Revised 9-20-1972.

Copyright National Electrical Manufacturers Association
Provided by IHS under license with NEMA
No reproduction or networking permitted without license from IHS
Not for Resale

9009279 0003511 970

Dimensions and tolerances for face-mounted fractional-horsepower motors for oil burners shall be as follows:

A. DIMENSIONS

AJ	AK	BD Max	CE Max
6.750	5.500	6.25	7.75
7.250	6.375	7.00	8.25

B. TOLERANCES▲

Maximum face runout—0.008-inch indicator reading.

Maximum pilot eccentricity—0.008-inch indicator reading.

AK dimension— + 0.000, − 0.005 inch.

Recommended Standard 6-11-1946, revised 11-17-1949; 6-22-1950; 1-23-1951, NEMA Standard 11-12-1953, revised 11-11-1954; 6-30-1958; 9-20-1972; 5-17-1983.

MG 1-18.290 Frame Number and Frame Suffix Letter

A. When a motor of a frame size given in MG 1-11.31 is designed in accordance with the standards for oil burner motors and has an AK dimension of 5.500 inches, the frame number shall be followed by the suffix letter M to indicate such construction.

B. When a motor of a frame size given in MG 1-11.31 is designed in accordance with the standards for oil burner motors and has an AK dimension of 6.375 inches, the frame number shall be followed by the suffix letter N to indicate such construction.

Recommended Standard 11-17-1949, NEMA Standard 11-12-1953.

▲ Revised.

Copyright National Electrical Manufacturers Association
Provided by IHS under license with NEMA
No reproduction or networking permitted without license from IHS

Not for Resale

9009279 0003512 807

Fractional-horsepower Motors for Home Laundry Equipment

(A home laundry equipment motor is one which furnishes power for driving a home washing machine, dryer or a combination washer-dryer.)

MG 1-18.301 Classification According to Electrical Type

1. Single phase.
   a. Split phase.
   b. Capacitor start.

Recommended Standard 6-11-1946; NEMA Standard 5-17-1953, revised 11-13-1958.

RATINGS

MG 1-18.302 Voltage Ratings

The voltage ratings of single-phase motors shall be:

1. 60 hertz—115 and 230 volts.
2. 50 hertz—110 and 220 volts.

Recommended Standard 6-11-1946; NEMA Standard 5-17-1953, revised 11-13-1958; 1-17-1974.

MG 1-18.303 Frequencies

Frequencies shall be 50 and 60 hertz.

Recommended Standard 6-11-1946; NEMA Standard 5-17-1953, revised 11-11-1954; 11-9-1961; 1-17-1974.

MG 1-18.304 Horsepower and Speed Ratings

A. Horsepower ratings shall be 1/12, 1/8, 1/6, 1/4, 1/3, 1/2 and 3/4 horsepower.

B. Speed ratings shall be:

1. 60 hertz
   a. Single speed—1800 rpm synchronous speed, 1725 rpm approximate full-load speed.
   b. Two speed—1800/1200 rpm synchronous speeds, 1725/1140 rpm approximate full-load speeds.
2. 50 hertz
   a. Single speed—1500 rpm synchronous speed, 1425 rpm approximate full-load speed.
   b. Two speed—1500/1000 rpm synchronous speeds, 1425/950 rpm approximate full-load speeds.

Recommended Standard 6-11-1946; NEMA Standard 5-17-1953, revised 11-11-1954; 11-13-1958; 11-12-1959; 11-9-1961; 1-17-1974.

MG 1-18.305 Nameplate Marking

The following minimum amount of information shall be given on all nameplates. For abbreviations, see MG 1-1.80.

1. Manufacturer's name (may be coded).
2. Manufacturer's type and frame designation.
3. Horsepower output (optional if amperes is marked).
4. Insulation system designation (if other than Class A).
5. Rpm at full load.
6. Frequency.
7. Voltage.
8. Full-load amperes (optional if horsepower is marked).
9. For motors equipped with thermal protection, the words "thermally protected" or "thermally protected L", whichever is applicable. (L designates locked rotor protection only.)

NEMA Standard 11-9-1961, revised 1-17-74.

Copyright National Electrical Manufacturers Association
Provided by IHS under license with NEMA
No reproduction or networking permitted without license from IHS
Not for Resale

9009279 0003513 743

TESTS AND PERFORMANCE

MG 1-18.306 Temperature Rise

Motors for home laundry equipment shall have either Class A, Class B, or Class F insulation. The temperature rise, above the temperature of the cooling medium, for each of the various parts of the motor when tested in accordance with the rating shall not exceed the following values:

COIL WINDINGS—Resistance, Degrees C	
Class A insulation	60
Class B insulation	80
Class F insulation	105

SQUIRREL-CAGE WINDINGS SHALL NOT ATTAIN SUCH TEMPERATURES AS WILL OCCASION MECHANICAL INJURY TO THE MACHINE.

NOTE I—See MG 1-1.65 for description of classes of insulation.
NOTE II—These temperature rises are based on an ambient temperature of 40°C.

Recommended Standard 6-11-1946, revised 11-15-1951; NEMA Standard 5-17-1953, revised 11-13-1958; 11-12-1959; 11-9-1961; 1-17-1974.

MG 1-18.307 Basis of Horsepower Rating

For single-phase induction motors, see MG 1-10.33, Table 10-1.

NEMA Standard 1-26-1948, revised 11-9-1961.

MG 1-18.308 Maximum Locked-rotor Current

The locked-rotor current of 115-volt laundry equipment motors shall not exceed 50 amperes when tested in accordance with IEEE Std 114, *Test Procedure for Single-phase Induction Motors,* with the current value being read at the end of the 3-second period.

NEMA Standard 11-9-1961.

MG 1-18.309 High-potential Test

See MG 1-3.01 and MG 1-12.03.

MG 1-18.310 Variation from Rated Voltage

See MG 1-12.43.

MG 1-18.311 Variation from Rated Frequency

See MG 1-12.44.

MG 1-18.312 Combined Variation of Voltage and Frequency

See MG 1-12.45.

MANUFACTURING

MG 1-18.313 General Mechanical Features

Motors for home laundry equipment shall be constructed with the following mechanical features:

1. Open.
2. Sleeve bearing.
3. Mounting. The motors shall be provided with one of the following:
   a. Mounting rings for resilient mounting. The mounting ring dimensions and the spacing between mounting rings shall be as shown in MG 1-18.314.
   b. Extended studs. Stud spacing dimensions shall be as shown in MG 1-18.314.
4. Shaft extension in accordance with MG 1-18.314.
5. When blade terminals are used, the blade shall be 0.25 inch wide and 0.03 inch thick.

Recommended Standard 1-26-1948; NEMA Standard 5-17-1953, revised 6-24-1957; 11-13-1958; 11-9-1961; 1-17-1974.

Copyright National Electrical Manufacturers Association
Provided by IHS under license with NEMA
No reproduction or networking permitted without license from IHS
Not for Resale

9009279 0003514 68T

MG 1-18.314 Dimensions for Motors for Home Laundry Equipment

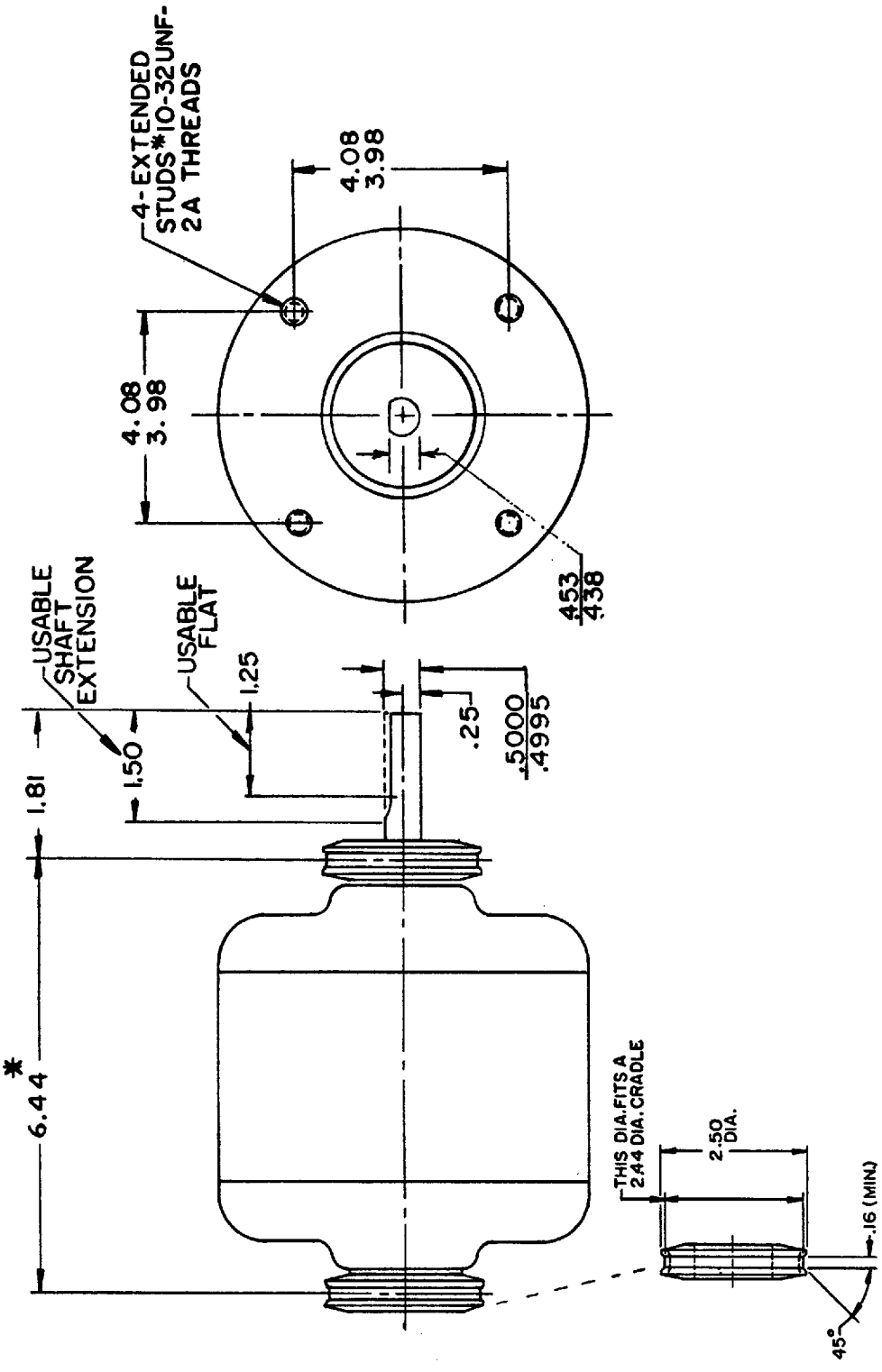

* When this dimension is greater or less than 6.44 inches, it shall vary in increments of 0.50 inch.
Recommended Standard 6-4-1948; NEMA Standard 5-17-1953, revised 11-12-1953; 11-13-1958; 11-17-1960; 11-9-1961; 1-17-1974.

Copyright National Electrical Manufacturers Association
Provided by IHS under license with NEMA
No reproduction or networking permitted without license from IHS
Not for Resale

9009279 0003515 516

Motors for Jet Pumps

(A jet-pump motor is an open dripproof-type motor built for horizontal or vertical operation for direct-driven centrifugal ejector pumps.)

MG 1-18.326 Classification According to Electrical Type

1. Single phase.
   a. Split phase.
   b. Capacitor start.
   c. Repulsion-start induction.
2. Polyphase induction.
   Squirrel cage.
3. Direct current.
   Compound wound.

Recommended Standard 1-25-1946, NEMA Standard 5-17-1953, revised 3-22-1972.

RATINGS

MG 1-18.327 Voltage Ratings

A. SINGLE-PHASE MOTORS

1. 60 hertz
   a. Split phase—115 and 230 volts.
   b. Capacitor start—115/230 volts*.
   c. Repulsion-start induction—115/230 volts.
2. 50 hertz
   a. Split phase—110 and 220 volts.
   b. Capacitor start—110/220 volts†.
   c. Repulsion-start induction—110/220 volts.

* Single-phase three-horsepower motors are rated for 230-volt operation only.
† Single-phase three-horsepower motors are rated for 220-volt operation only.

B. POLYPHASE INDUCTION MOTORS

1. 60 hertz—200 and 230/460 volts.
2. 50 hertz—220 and 380 volts.

C. DIRECT-CURRENT MOTORS

115 and 230 volts.

Recommended Standard 1-25-1946, NEMA Standard 5-17-1953, revised 11-21-1968; 7-16-1969; 3-22-1972; 11-8-1973.

MG 1-18.328 Frequencies

Frequencies shall be 50 and 60 hertz.

Recommended Standard 1-25-1946, NEMA Standard 5-17-1953, revised 3-22-1972.

MG 1-18.329 Horsepower, Speed and Service Factor Ratings

The horsepower ratings shall be ⅓, ½, ¾, 1, 1½, 2 and 3 horsepower.

The service factor and minimum rpm at service factor shall be:

Hp	Service Factor	Minimum Rpm at Service Factor*
	60 Hertz	
⅓	1.75	3450
½	1.60	3450
¾	1.50	3450
1	1.40	3450
1½	1.30	3450
2	1.20	3450
3	1.15	3450
	50 Hertz	
All	1.0	2850
	Direct Current	
All	1.0	3450

* This speed is obtained in a test at rated voltage when the temperature of the winding and the other parts of the machine are at approximately 25°C at the start of the test.

Recommended Standard 1-25-1946, NEMA Standard 5-17-1953, revised 11-12-1959; 3-22-1972; 11-8-1973.

Copyright National Electrical Manufacturers Association
Provided by IHS under license with NEMA
No reproduction or networking permitted without license from IHS
Not for Resale

9009279 0003516 452

TESTS AND PERFORMANCE

MG 1-18.330 Temperature Rise

The temperature rise above the temperature of the cooling medium for each of the various parts of the motor, when tested in accordance with the service factor horsepower rating, shall not exceed the following values:

CLASS OF INSULATION	A	B
COIL WINDINGS, DEGREES C		
Single-phase and polyphase induction motors—resistance		
Fractional or integral horsepower	70	...
Integral horsepower	...	90
Direct-current motors—resistance	70	100
Commutators—thermometer	65	85

SQUIRREL-CAGE WINDINGS SHALL NOT ATTAIN SUCH TEMPERATURES AS WILL OCCASION MECHANICAL INJURY TO THE MACHINE.

NOTE I—See MG 1-1.65 for description of classes of insulation.
NOTE II—All temperature rises are based on an ambient temperature of 40°C. Abnormal deterioration of insulation may be expected if this ambient temperature is exceeded in regular operation.
NOTE III—Rescinded 11-14-1974.

Recommended Standard 1-25-1946, revised 11-15-1951, NEMA Standard 5-17-1953, revised 11-12-1959; 3-22-1972; 11-14-1974.

MG 1-18.331 Basis of Horsepower Rating

For single-phase induction motors, see MG 1-10.33.

NEMA Standard 1-26-1948.

MG 1-18.332 Torque Characteristics

For breakdown torque, see MG 1-12.31 for single-phase induction motors and MG 1-12.36 for polyphase induction motors.

Recommended Standard 6-24-1949, NEMA Standard 5-17-1953.

MG 1-18.333 Maximum Locked-rotor Current

See MG 1-12.32, MG 1-12.33 or MG 1-12.34, depending on type and rating of motor.

NEMA Standard 3-22-1972.

MG 1-18.334 High-potential Test

See MG 1-3.01 and MG 1-12.03.

MG 1-18.335 Variation from Rated Voltage

See MG 1-12.43 and MG 1-12.63.

MG 1-18.336 Variation from Rated Frequency

See MG 1-12.44.

MG 1-18.337 Combined Variation of Voltage and Frequency

See MG 1-12.45.

MG 1-18.338 Direction of Rotation

The direction of rotation for jet-pump motors shall be clockwise facing the end opposite the drive.

Recommended Standard 1-25-1946, NEMA Standard 5-17-1953.

Copyright National Electrical Manufacturers Association
Provided by IHS under license with NEMA
No reproduction or networking permitted without license from IHS

Not for Resale

9009279 0003517 399

MANUFACTURING

MG 1-18.339 General Mechanical Features

Jet-pump motors shall be constructed with the following mechanical features (see dimension diagram MG 1-18.340):

1. Open dripproof construction.
2. Grease-lubricated ball bearing on one end suitable for taking axial thrust and with either oil-lubricated sleeve bearing or ball bearing on the other end suitable for horizontal or vertical position. The axial thrust may be taken at either end consistent with design practice.
3. The face mounting for the drive end shall be in accordance with Fig. 1 of MG 1-18.340.
4. The end shield at the end opposite the drive shall be totally enclosed or shall provide a suitable means to accommodate a drip cover when required for vertical mounting.
5. Standard shaft extension shall be in accordance with Fig. 1 of MG 1-18.340 (frame 56C). Alternate standard shaft extension shall be in accordance with Fig. 2 of MG 1-18.340 (frame 56J)*.
6. Terminals for line lead connections shall be located in the end shield at the end opposite the drive at the 3 o'clock position.
7. The capacitor unit, when mounted externally on capacitor motors, shall be attached to the motor frame 90 degrees counterclockwise from the terminal location facing the end opposite the drive and as shown by the dotted lines in Fig. 1 of MG 1-18.340.
8. Frame-mounted nameplates shall be attached to the motor in the area from 0 to 180 degrees counterclockwise from the motor terminal location facing the end opposite the drive. The nameplate shall be so located that it will be read when the motor is mounted in a vertical position and the drip cover, when used, is in place. Any other instruction plates shall be immediately adjacent to the motor nameplate.
9. Automatic reset thermal overload protector shall be provided on single-phase motors.
10. When the alternate shaft extension shown in Fig. 2 of MG 1-18.340 is used, a means shall be provided for holding the shaft during assembly or removal of the pump impeller ($\frac{3}{32}$-inch screwdriver slot in opposite end of shaft, flat in shaft, etc.).

* If the shaft extension length of the motor is not suitable for the application, it is recommended that deviations from this length be in ¼ inch increments. (Approved as Authorized Engineering Information 6-30-1958.)

Recommended Standard 1-26-1948, revised 6-24-1949, NEMA Standard 5-17-1953, revised 11-12-1953; 3-22-1972; 11-8-1973.

Copyright National Electrical Manufacturers Association
Provided by IHS under license with NEMA
No reproduction or networking permitted without license from IHS
Not for Resale

9009279 0003518 225

MG 1-18.340 Dimensions for Face-mounted Motors for Jet Pumps▲

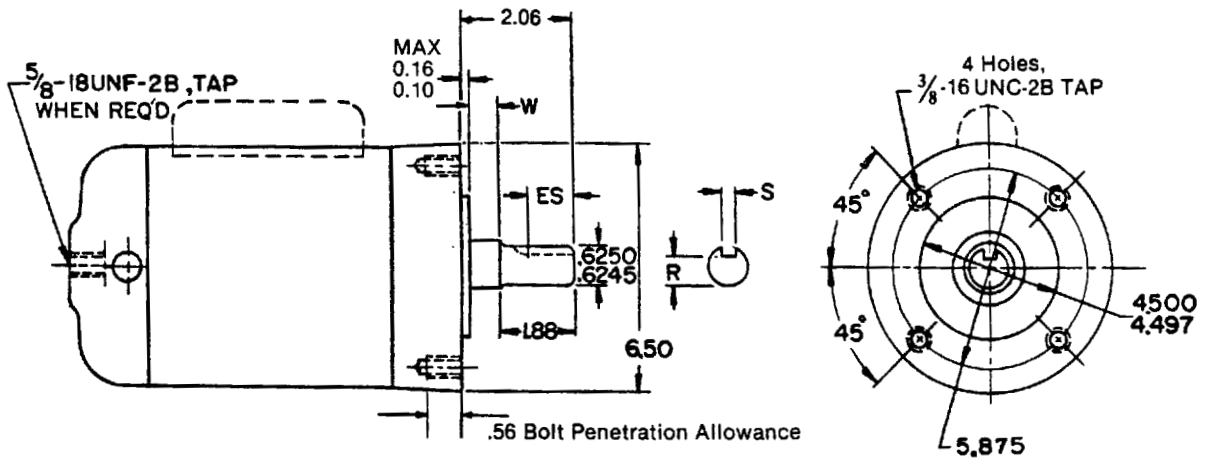

NOTE I—Face runout or eccentricity of rabbet (with indicator mounted on the shaft) will be within 0.004 in. gage reading
NOTE II—For general mechanical features, see MG 1-18.339.
NOTE III—See MG 1-11.31 and MG 1-11.60 for key dimensions.

FIG. 1

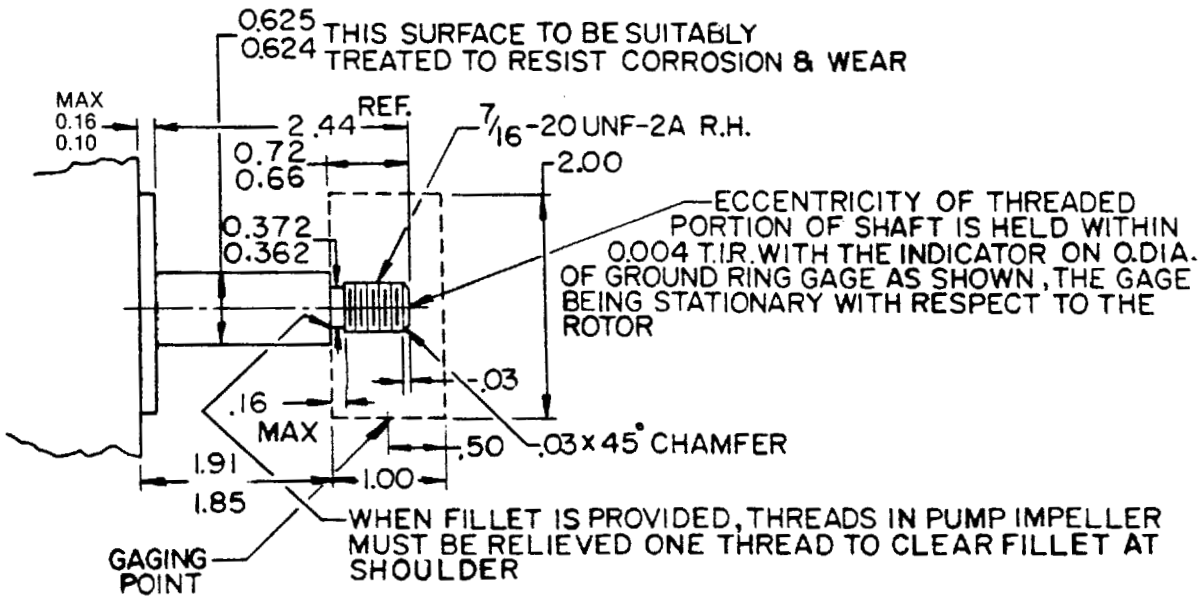

FIG. 2

All dimensions in inches.

Recommended Standard 6-4-1948, revised 6-24-1949, NEMA Standard 5-17-1953, revised 11-12-1953; 7-21-1954, 11-11-1954; 5-24-1960; 11-17-1966; 7-17-1974; 1-14-1975; 5-15-1978; 9-17-1981.

MG 1-18.341 Frame Number and Frame Suffix Letter

When a motor of a frame size given in MG 1-11.31 and MG 1-11.60 is designed in accordance with the standards for jet-pump motors and has the alternate standard shaft extension (threaded shaft) shown in Fig. 2 of MG 1-18.340, the frame number shall be followed by the suffix letter J to indicate such construction.

Recommended Standard 11-17-1949, NEMA Standard 5-17-1953

▲ Revised.

Copyright National Electrical Manufacturers Association
Provided by IHS under license with NEMA
No reproduction or networking permitted without license from IHS
Not for Resale

9009279 0003519 161

Fractional-horsepower Motors for Coolant Pumps

(A coolant-pump motor is an enclosed ball-bearing-type motor built for horizontal or vertical operation for direct connection to direct-driven centrifugal coolant pumps.)

MG 1-18.351 Classification According to Electrical Type

1. Single phase.
   a. Split phase.
   b. Capacitor start.
   c. Repulsion-start induction.
2. Polyphase induction.
   Squirrel cage, constant speed.
3. Direct current.
   Compound wound.

Recommended Standard 6-24-1949, NEMA Standard 5-17-1953.

RATINGS

MG 1-18.352 Voltage Ratings

A. SINGLE-PHASE MOTORS

1. 60 hertz
   a. Split phase—115 and 230 volts.
   b. Capacitor start
      (1) ¼ horsepower and smaller—115 and 230 volts.
      (2) ⅓ horsepower and larger—115/230 volts.
   c. Repulsion-start induction—115/230 volts.
2. 50 hertz
   a. Split phase—110 and 220 volts.
   b. Capacitor start
      (1) ¼ horsepower and smaller—110 and 220 volts.
      (2) ⅓ horsepower and larger—110/220 volts.
   c. Repulsion-start induction—110/220 volts.

B. POLYPHASE INDUCTION MOTORS

1. 60 hertz—200, 230 and 460 volts.
2. 50 hertz—220 and 380 volts.

C. DIRECT-CURRENT MOTORS

115 and 230 volts.

Recommended Standard 6-24-1949, NEMA Standard 5-17-1953, revised 11-21-1968; 7-16-1969.

MG 1-18.353 Frequencies

Frequencies for single-phase and polyphase-induction motors shall be 50 and 60 hertz.

Recommended Standard 6-24-1949, NEMA Standard 5-17-1953, revised 11-11-1954.

MG 1-18.354 Horsepower and Speed Ratings

Horsepower and speed ratings shall be:

	60 hertz		50 hertz	
Brake Hp Rating	Synchronous Rpm	Approximate Full-load Rpm	Synchronous Rpm	Approximate Full-load Rpm
1/20	3600	3450	3000	2850
	1800	1725	1500	1425
1/12	3600	3450	3000	2850
	1800	1725	1500	1425
1/8	3600	3450	3000	2850
	1800	1725	1500	1425
1/6	3600	3450	3000	2850
	1800	1725	1500	1425
1/4	3600	3450	3000	2850
	1800	1725	1500	1425
1/3	3600	3450	3000	2850
	1800	1725	1500	1425
1/2	3600	3450	3000	2850
	1800	1725	1500	1425
3/4	3600	3450	3000	2850
	1800	1725	1500	1425
1	3600	3450	3000	2850

Recommended Standard 6-24-1949, NEMA Standard 5-17-1953, revised 11-11-1954.

Copyright National Electrical Manufacturers Association
Provided by IHS under license with NEMA
No reproduction or networking permitted without license from IHS
Not for Resale

9009279 0003520 983

TESTS AND PERFORMANCE

MG 1-18.355 Temperature Rise

Motors for coolant pumps shall have Class A insulation. The temperature rise above the temperature of the cooling medium for each of the various parts of the motor, when tested in accordance with the rating, shall not exceed the following values:

COIL WINDINGS, DEGREES C	
Single-phase and polyphase-induction motors*—	
Thermometer	55
Resistance	65
Direct-current motors—	
Thermometer	55
COMMUTATORS—Thermometer	65

SQUIRREL-CAGE WINDINGS SHALL NOT ATTAIN SUCH TEMPERATURES AS WILL OCCASION MECHANICAL INJURY TO THE MACHINE.

* Where two methods of temperature measurement are listed, a temperature rise within the values listed in the table, measured by either method, demonstrates conformity with the standard.

NOTE I—See MG 1-1.65 for description of Class A insulation.

NOTE II—All temperature rises are based on a maximum ambient temperature of 40°C. Abnormal deterioration of insulation may be expected if this ambient temperature is exceeded in regular operation.

NOTE III—Rescinded 11-14-1974.

Recommended Standard 6-24-1949, revised 11-15-1951, NEMA Standard 5-17-1953, revised 11-12-1959; 11-14-1974.

MG 1-18.356 Basis of Horsepower Rating

For single-phase induction motors, see MG 1-10.33.

Recommended Standard 6-24-1949, NEMA Standard 5-17-1953.

MG 1-18.357 Torque Characteristics

For breakdown torque, see MG 1-12.31 for single-phase induction motors and MG 1-12.36 for polyphase-induction motors.

Recommended Standard 6-24-1949, NEMA Standard 5-17-1953.

MG 1-18.358 Maximum Locked-rotor Current

See MG 1-12.32.

MG 1-18.359 High-potential Tests

See MG 1-3.01 and MG 1-12.03.

MG 1-18.360 Variation from Rated Voltage

See MG 1-12.43 and MG 1-12.63.

MG 1-18.361 Variation from Rated Frequency

See MG 1-12.44.

MG 1-18.362 Combined Variation of Voltage and Frequency

See MG 1-12.45.

MG 1-18.363 Direction of Rotation

The direction of rotation for coolant-pump motors is clockwise, facing the end opposite the drive.

Recommended Standard 6-24-1949, NEMA Standard 5-17-1953.

MANUFACTURING

MG 1-18.364 General Mechanical Features

Coolant pump motors shall be constructed with the following mechanical features (see MG 1-18.340):

1. Totally enclosed.
2. Grease-lubricated ball bearings suitable for horizontal or vertical mounting which shall have suitable provision for taking axial thrust away from the front end.
3. Back end shield shall be machined in accordance with Fig. 1 of MG 1-18.340, except that the $\frac{5}{8}$"-18 tapped hole in the bearing hub shall be omitted.
4. The straight shaft extension shall be in accordance with MG 1-11.31 and MG 1-11.60 or, alternatively, in accordance with Fig. 2 of MG 1-18.340.
5. Terminals or leads shall be located in the front end shield or on the frame adjacent to the front end shield.
6. The capacitor unit, when mounted externally on capacitor motors, shall be attached to the motor frame 90 degrees counterclockwise from the terminal location while facing the front end of the motors.

Recommended Standard 6-24-1949, NEMA Standard 5-17-1953.

Copyright National Electrical Manufacturers Association
Provided by IHS under license with NEMA
No reproduction or networking permitted without license from IHS
Not for Resale

9009279 0003521 81T

Submersible Motors for Deep Well Pumps—4-Inch

[A submersible motor for deep well pumps is a motor designed for operation while totally submerged in water having a temperature not exceeding 25°C (77°F).]

MG 1-18.376 Classification According to Electrical Type

1. Single phase.
   a. Split phase.
   b. Capacitor.
2. Polyphase induction.
   Squirrel cage, constant speed.

Suggested Standard for Future Design 11-12-1953, reaffirmed 11-15-1956; 5-24-1960, NEMA Standard 8-19-1964.

RATINGS

MG 1-18.377 Voltage Ratings

1. Single-phase motors
   a. 60 hertz—115 and 230 volts.
   b. 50 hertz—110 and 220 volts.
2. Polyphase induction motors
   a. 60 hertz—200, 230, 460 and 575 volts.
   b. 50 hertz—220 and 380 volts.

Suggested Standard for Future Design 11-12-1953, reaffirmed 11-15-1956; 5-24-1960; 8-19-1964; revised 8-20-1966; 7-13-1967, NEMA Standard 11-12-1970.

MG 1-18.378 Frequencies

Frequencies shall be 50 and 60 hertz.

Suggested Standard for Future Design 11-12-1953, reaffirmed 11-15-1956; 5-24-1960, NEMA Standard 8-19-1964.

MG 1-18.379 Horsepower and Speed Ratings

A. Horsepower ratings shall be:
   1. Single phase 115 volts—¼, ⅓ and ½ horsepower.
   2. Single phase 230 volts—¼, ⅓, ½, ¾, 1, 1½, 2 and 3 horsepower.
   3. Polyphase induction—¼, ⅓, ½, ¾, 1, 1½, 2, 3 and 5 horsepower.

B. Speeds shall be:
   1. 60 hertz—3600-rpm synchronous speed.
   2. 50 hertz—3000-rpm synchronous speed.

Suggested Standard for Future Design 11-12-1953. revised 11-17-1955, reaffirmed 6-1-1959; 5-24-1960; 8-19-1964; 7-17-1968, NEMA Standard 11-12-1970.

TESTS AND PERFORMANCE

MG 1-18.380 Basis of Horsepower Rating

For single-phase induction motors, see MG 1-10.33.

Suggested Standard for Future Design 11-12-1953, reaffirmed 11-15-1956; 5-24-1960, NEMA Standard 8-19-1964.

MG 1-18.381 Locked-rotor Current

A. For single-phase fractional-horsepower motors, see MG 1-12.32.

B. For single-phase integral-horsepower motors, see MG 1-12.33.

C. For 3-phase integral-horsepower squirrel-cage induction motors, see MG 1-12.34.

Suggested Standard for Future Design 11-12-1953, reaffirmed 11-15-1956; 5-24-1960, NEMA Standard 8-19-1964.

MG 1-18.382 High-potential Test

See MG 1-3.01 and MG 1-12.03.

Copyright National Electrical Manufacturers Association
Provided by IHS under license with NEMA
No reproduction or networking permitted without license from IHS
Not for Resale

9009279 0003522 756

MG 1-18.383 Variation from Rated Voltage at Control Box

See MG 1-12.43.

Length and size of cable should be taken into consideration, and the motor manufacturer should be consulted.

Authorized Engineering Information 11-12-1970.

MG 1-18.384 Variation from Rated Frequency

See MG 1-12.44.

MG 1-18.385 Direction of Rotation

The direction of rotation for submersible motors is clockwise facing the end opposite the drive.

Suggested Standard for Future Design 11-12-1953, reaffirmed 11-15-1956; 5-24-1960; 8-19-1964; 7-17-1968, NEMA Standard 11-12-1970.

MG 1-18.386 Thrust Capacity

When submersible pump motors are operated in a vertical position with the shaft up, they shall be capable of withstanding the following thrust:

Horsepower	Thrust, Pounds
¼ to 1½, incl.	300
2 to 5, incl.	900

Suggested Standard for Future Design 11-15-1956, reaffirmed 5-24-1960; 8-19-1964; 7-17-1968, NEMA Standard 11-12-1970.

MANUFACTURING

MG 1-18.387 Terminal Lead Markings

The terminal lead markings for single-phase submersible pump motors shall be as follows:

1. Auxiliary winding—red.
2. Main winding—black.
3. Common auxiliary winding and main winding—yellow.

Suggested Standard for Future Design 11-12-1953, reaffirmed 11-15-1956, revised 11-14-1957, reaffirmed 8-19-1964; 7-17-1968, NEMA Standard 11-12-1970.

Copyright National Electrical Manufacturers Association
Provided by IHS under license with NEMA
No reproduction or networking permitted without license from IHS
Not for Resale

9009279 0003523 692

MG 1-18.388 General Mechanical Features▲

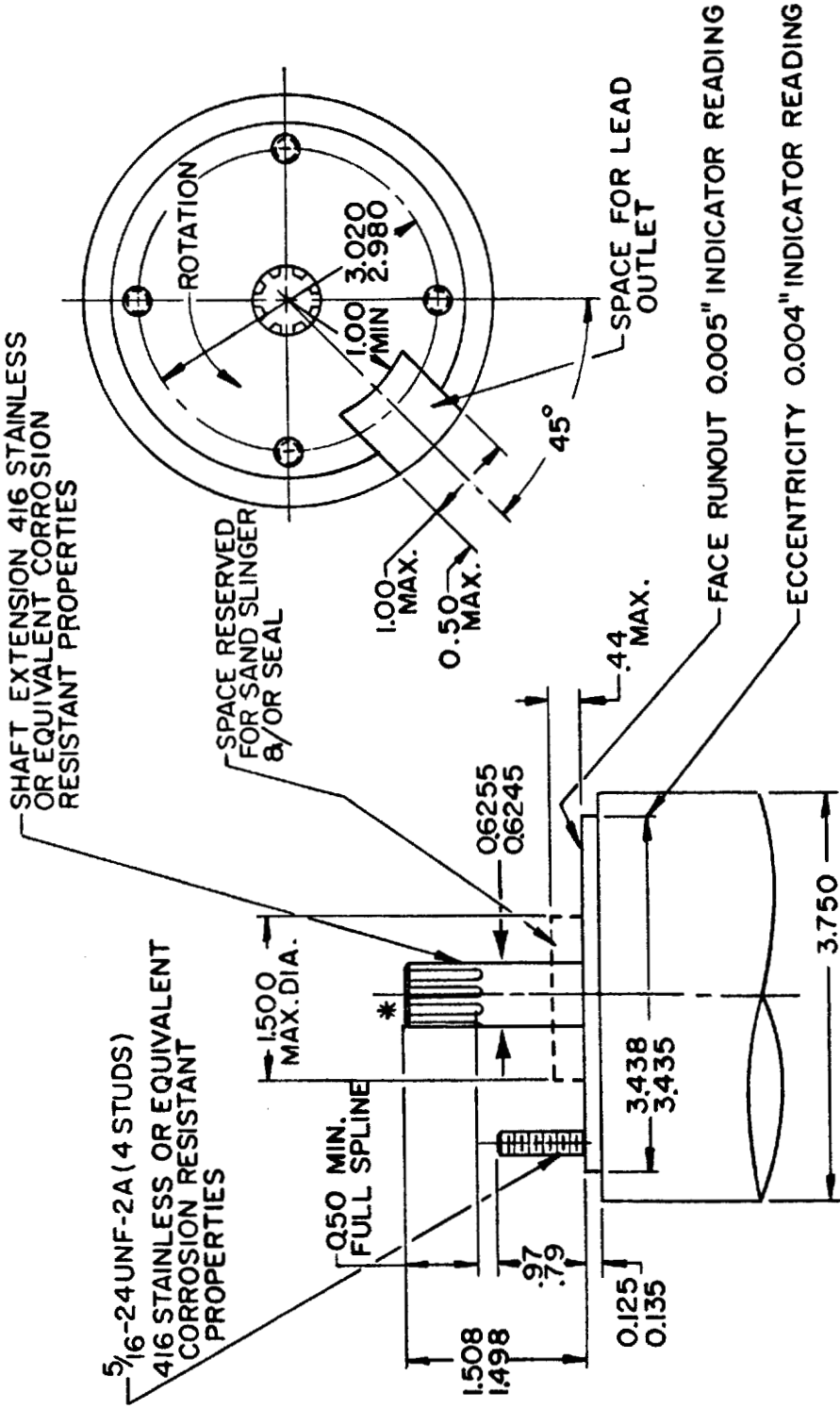

All dimensions in inches

* Spline Data—14 teeth, 24/48 pitch, 30 degree pressure angle, flat or fillet root, side fit, tolerance Class 5, in accordance with the American National Standards Institute B92.1, *Involute Splines and Inspection*, with major diameter reduced 0.12 inch to allow use with former short dedendum and present standard internal splines.

Suggested Standard for Future Design 11-12-1953, revised 11-11-1954; 11-17-1955, reaffirmed 6-1-1959; 8-20-1962; revised 11-12-1964; 11-11-1965, NEMA Standard 11-12-1970, revised 5-17-1972; 3-8-1983.

▲ Revised.

Copyright National Electrical Manufacturers Association
Provided by IHS under license with NEMA
No reproduction or networking permitted without license from IHS
Not for Resale

9009279 0003524 529

Submersible Motors for Deep Well Pumps—6-Inch

[A submersible motor for deep well pumps is a motor designed for operation while totally submerged in water having a temperature not exceeding 25°C (77°F).]

MG 1-18.401 Classification According to Electrical Type

See MG 1-18.376.

RATINGS

MG 1-18.402 Voltage Ratings

1. Single-phase motors
   a. 60 hertz—230 volts.
   b. 50 hertz—220 volts.
2. Polyphase induction motors.
   a. 60 hertz—200, 230, 460 and 575 volts.
   b. 50 hertz—220 and 380 volts.

Suggested Standard for Future Design 6-3-1956, reaffirmed 5-24-1960, 8-19-1964, revised 8-20-1966; 7-13-1967, NEMA Standard 11-12-1970.

MG 1-18.403 Frequencies

See MG 1-18.378.

MG 1-18.404 Horsepower and Speed Ratings

A. Horsepower ratings shall be:
   1. Single phase 230 volts—3, 5 and 7½ horsepower.
   2. Polyphase induction—3, 5, 7½, 10, 15, 20, 25 and 30 horsepower.

B. Speeds shall be:
   1. 60 hertz—3600-rpm synchronous speed.
   2. 50 hertz—3000-rpm synchronous speed.

Suggested Standard for Future Design 6-3-1956, reaffirmed 5-24-1960; 8-19-1964; 7-17-1968, NEMA Standard 11-12-1970, revised 11-11-1976.

TESTS AND PERFORMANCE

MG 1-18.405 Basis of Horsepower Rating

For single-phase induction motors, see MG 1-10.33.

Suggested Standard for Future Design 6-3-1956, reaffirmed 5-24-1960; 8-19-1964, 7-17-1968, NEMA Standard 11-12-1970.

MG 1-18.406 Locked-rotor Current

A. For single-phase integral-horsepower motors, see MG 1-12.33.

B. For three-phase integral-horsepower squirrel-cage induction motors, the locked-rotor current, when measured with rated voltage and frequency impressed and with rotor locked, shall not exceed the following:

Three-phase 60-hertz Motors at 230 Volts*	
Hp	Locked-rotor Current, Amperes
3	64
5	92
7½	130
10	190
15	290
20	390
25	500
30	600

* Locked-rotor current of motors designed for voltages other than 230 volts shall be inversely proportional to the voltages.

Suggested Standard for Future Design 6-3-1956, reaffirmed 5-24-1960; revised 11-12-1964; 8-20-1966, NEMA Standard 11-12-1970, revised 11-11-1976.

MG 1-18.407 High-potential Test

See MG 1-3.01 and MG 1-12.03.

Copyright National Electrical Manufacturers Association
Provided by IHS under license with NEMA
No reproduction or networking permitted without license from IHS
Not for Resale

9009279 0003525 465

MG 1-18.408 Variation from Rated Voltage at Control Box

See MG 1-12.43.

Suggested Standard for Future Design 6-3-1956, reaffirmed 5-24-1960, revised 11-12-1964, reaffirmed 7-17-1968, NEMA Standard 11-12-1970.

Length and size of cable should be taken into consideration, and the motor manufacturer should be consulted.

Authorized Engineering Information 11-12-1970.

MG 1-18.409 Variation from Rated Frequency

See MG 1-12.44.

MG 1-18.410 Direction of Rotation

See MG 1-18.385.

MG 1-18.411 Thrust Capacity

When submersible pump motors are operated in a vertical position with the shaft up, they shall be capable of withstanding the following thrusts:

Hp	Thrust, Pounds
3	300
5	500
7½	750
10	1000
15	1500
20	2000
25	2500
30	3000

Suggested Standard for Future Design 6-3-1956, reaffirmed 5-24-1960; 8-19-1964; 7-17-1968, NEMA Standard 11-12-1970, revised 11-11-1976.

MANUFACTURING

MG 1-18.412 Terminal Lead Markings

See MG 1-18.387.

Copyright National Electrical Manufacturers Association
Provided by IHS under license with NEMA
No reproduction or networking permitted without license from IHS
Not for Resale

Copyright National Electrical Manufacturers Association
Provided by IHS under license with NEMA
No reproduction or networking permitted without license from IHS
Not for Resale

9009279 0003526 3T1

MG 1-18.413 General Mechanical Features▲

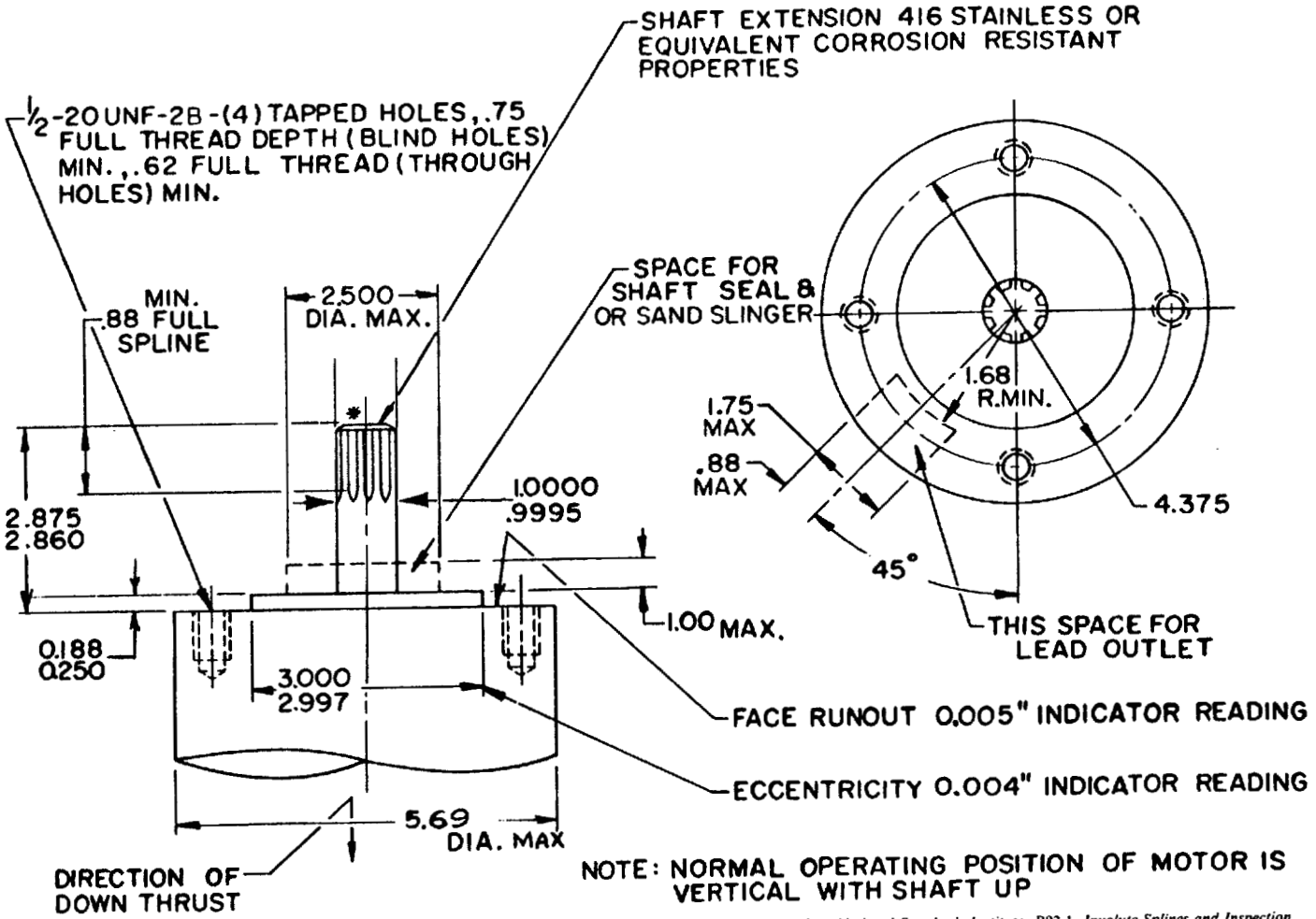

* Spline Data—15 teeth, 16/32 pitch, 30 degree pressure angle, fillet root, side fit, tolerance Class 5, in accordance with the American National Standards Institute, B92.1, *Involute Splines and Inspection*, with major diameter reduced 0.016 inch to allow use with former short dedendum and present standard internal splines.

Suggested Standard for Future Design 6-3-1956, reaffirmed 5-24-1960, revised 11-12-1964; 11-11-1965, NEMA Standard 11-12-1970, revised 5-17-1972; 11-11-1976; 3-8-1983.

▲ Revised.

9009279 0003527 238

Submersible Motors for Deep Well Pumps—8-Inch

[A submersible motor for deep well pumps is a motor designed for operation while totally submerged in water having a temperature not exceeding 25°C (77°F).]

MG 1-18.414 Classification According to to Electrical Type▲

Polyphase induction-squirrel cage, constant speed.

Suggested Standard for Future Design 11-11-1976, NEMA Standard 3-8-1983.

RATINGS

MG 1-18.415 Voltage Ratings▲

1. 60 hertz—460 and 575 volts.
2. 50 hertz—380 volts.

Suggested Standard for Future Design 11-11-1976, NEMA Standard 3-8-1983.

MG 1-18.416 Frequencies▲

Frequencies shall be 60 and 50 hertz.

Suggested Standard for Future Design 11-11-1976, NEMA Standard 3-8-1983.

MG 1-18.417 Horsepower and Speed Ratings▲

A. Horsepower ratings shall be 40, 50, 60, 75 and 100 horsepower.

B. Speeds shall be:

1. 60 hertz—3600-rpm synchronous speed.
2. 50 hertz—3000-rpm synchronous speed.

Suggested Standard for Future Design 11-11-1976, NEMA Standard 3-8-1983.

TESTS AND PERFORMANCE

MG 1-18.418 Locked-rotor Current▲

For squirrel-cage induction motors, the locked-rotor current, when measured with rated voltage and frequency impressed and with rotor locked, shall not exceed the following:

Three-phase 60-hertz Motors at 460 Volts*	
Hp	Locked-rotor Current, Amperes
40	380
50	470
60	560
75	700
100	930

* Locked-rotor current of motors designed for voltages other than 460 volts shall be inversely proportional to the voltages.

Suggested Standard for Future Design 11-11-1976, NEMA Standard 3-8-1983.

MG 1-18.419 High-potential Test

See MG 1-3.01 and MG 1-12.03.

MG 1-18.420 Variation from Rated Voltage at Control Box

See MG 1-12.43.

NEMA Standard 11-11-1976.

Length and size of cable should be taken into consideration, and the motor manufacturer should be consulted.

Authorized Engineering Information 11-11-1976.

MG 1-18.421 Variation from Rated Frequency

See MG 1-12.43.●

MG 1-18.422 Direction of Rotation

See MG 1-18.385.

MG 1-18.423 Thrust Capacity▲

When submersible pump motors are operated in a vertical position with the shaft up, they shall be capable of withstanding the following thrusts:

Hp	Thrust, Pounds
40	4000
50	5000
60	6000
75	7500
100	10000

Suggested Standard for Future Design 11-11-1976, NEMA Standard 3-8-1983.

▲ Revised.
● Editorially revised.

Copyright National Electrical Manufacturers Association
Provided by IHS under license with NEMA
No reproduction or networking permitted without license from IHS Not for Resale

9009279 0003528 174

MG 1-18.424 General Mechanical Features ▲

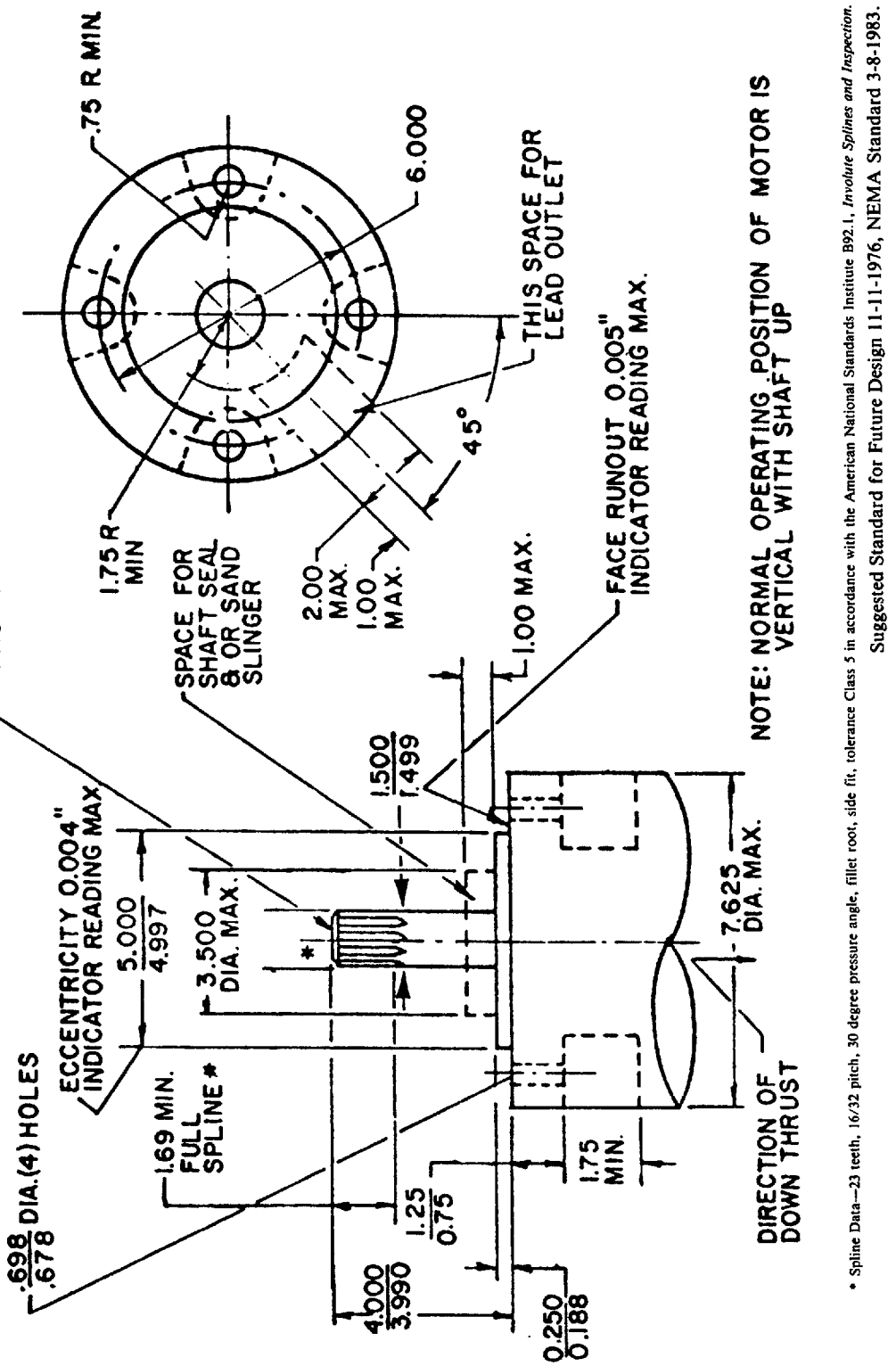

* Spline Data—23 teeth, 16/32 pitch, 30 degree pressure angle, fillet root, side fit, tolerance Class 5 in accordance with the American National Standards Institute B92.1, *Involute Splines and Inspection.* Suggested Standard for Future Design 11-11-1976, NEMA Standard 3-8-1983.

▲ Revised.

Copyright National Electrical Manufacturers Association
Provided by IHS under license with NEMA
No reproduction or networking permitted without license from IHS

Not for Resale

9009279 0003529 000

Integral-horsepower DC Elevator Motors

MG 1-18.426 Classification According to Type

CLASS DH

Class DH direct-current high-speed elevator motors are open-type motors for use with gear-driven elevators. Speed variation is obtained primarily by armature voltage control.

CLASS DL

Class DL direct-current low-speed elevator motors are open-type motors for use with gearless elevators. Speed variation is obtained primarily by armature voltage control.

NEMA Standard 5-27-1924, revised 11-15-1962.

RATINGS

MG 1-18.427 Voltage Ratings

Because the speed variation of direct-current elevator motors is primarily obtained by armature voltage control, these motors are operated over a wide range of voltages. Usually the highest applied armature voltage should not exceed 600 volts. Whenever possible, it is recommended that voltage ratings of 230 or 240 volts should be utilized for motors of all horsepower ratings, although voltage ratings of 115 or 120 volts may be used for motors having ratings of 10 horsepower and smaller.

Recommended Standard 8-1-1935, NEMA Standard 11-12-1953, Authorized Engineering Information 11-15-1962.

MG 1-18.428 Horsepower and Speed Ratings

CLASS DH

When the voltage rating of a Class DH direct-current elevator motor is either 230 or 240 volts (see MG 1-18.427), the horsepower and speed ratings shall be:

Hp	Speed, Rpm			
7½	1750	1150	850	...
10	1750	1150	850	...
15	1750	1150	850	...
20	1750	1150	850	650
25	1750	1150	850	650
30	1750	1150	850	650
40	1750	1150	850	650
50	...	1150	850	650

(Continued)

(Continued)

Hp	Speed, Rpm			
60	...	1150	850	650
75	...	...	850	650
100	...	...	850	650

Recommended Standard 10-27-1926, NEMA Standard 11-12-1953, revised 11-15-1962; 11-14-1974.

CLASS DL

Because of the multiplicity of combinations of traction sheave diameters, car speeds, car loading ratings and roping, it is impracticable to develop a standard for horsepower and speed ratings for Class DL direct-current elevator motors.

Authorized Engineering Information 11-15-1962.

MG 1-18.429 Basis of Rating

A. A Class DH direct-current elevator motor shall have a time rating of 15 minutes, 30 minutes or 60 minutes. When operated at rated horsepower, speed and time rating, the temperature rise of the motor shall be in accordance with MG 1-18.436.

B. A Class DL direct-current elevator motor shall have a time rating of 60 minutes. When operated at rated horsepower, speed and time rating, the temperature rise of the motor shall be in accordance with MG 1-18.436.

Recommended Standard 5-27-1926, NEMA Standard 11-12-1953, revised 11-15-1962.

NOTE—When the elevator duty cycle permits, a Class DL direct-current elevator motor may have a time rating of 30 minutes.

Authorized Engineering Information 11-15-1962.

MG 1-18.430 Nameplate Markings

See par. A of MG 1-10.62.

TESTS AND PERFORMANCE

MG 1-18.431 Acceleration and Deceleration Capacity

Class DH or DL direct-current elevator motors shall be capable of carrying successfully at least 200 percent of rated armature current for a period not to exceed 3 seconds at any voltage up to 70 percent of rated armature voltage and a momentary load of at least 230 percent of rated armature current within the same voltage range.

NEMA Standard 11-15-1962.

Copyright National Electrical Manufacturers Association
Provided by IHS under license with NEMA
No reproduction or networking permitted without license from IHS
Not for Resale

9009279 0003530 822

MG 1-18.432 Variation in Speed Due to Load

CLASS DH

When Class DH direct-current elevator motors (see MG 1-18.428) are operated at rated voltage, the variation in speed from full-load to no-load hot, based upon full-load speed hot with constant field current maintained, shall not exceed 10 percent.

CLASS DL

When Class DL direct-current elevator motors are operated at rated voltage, the variation in speed from full-load to no-load hot, based upon full-load speed hot with constant field current maintained, shall not exceed 20 percent.

NEMA Standard 11-15-1962.

MG 1-18.433 Variation from Rated Speed

When Class DH or Class DL direct-current elevator motors (see MG 1-18.428) are operated at rated armature and field voltage and load, the actual full-load speed hot shall not vary by more than plus or minus 7.5 percent from rated speed.

NEMA Standard 11-15-1962.

MG 1-18.434 Variation in Speed Due to Heating

A. When a Class DH or Class DL direct-current elevator motor is intended for use in an open loop elevator control system and is operated at rated armature and field voltage and load, the variation in speed from full-load cold to full-load hot during a run of a specified duration shall not exceed 10 percent of the full-load speed hot.

B. When a Class DH or Class DL direct-current elevator motor is intended for use in a closed loop elevator control system and is operated at rated armature and field voltage and load, the variation in speed from full-load cold to full-load hot during a run of a specified duration shall not exceed 15 percent of the full-load speed hot.

NEMA Standard 11-15-1962.

MG 1-18.435 High-potential Test

See MG 1-3.01 and MG 1-12.03.

MG 1-18.436 Temperature Rise ▲

The temperature rise, above the temperature of the cooling medium, for each of the various parts of Class DH and Class DL direct-current elevator motors, when tested in accordance with the rating, shall not exceed the values given in the following table:

TIME RATING	15 minutes		30 and 60 minutes	
CLASS OF INSULATION*	A	B	A	B
LOAD, PERCENT OF RATED CAPACITY	100	100	100	100
TEMPERATURE RISE,†DEGREES C				
1. ARMATURE WINDINGS AND ALL OTHER WINDINGS OTHER THAN THOSE GIVEN IN PAR. 2 AND 3				
Resistance	80	115	70	100
2. MULTI-LAYER FIELD WINDINGS				
Resistance	80	115	70	100
3. SINGLE-LAYER FIELD WINDINGS WITH EXPOSED UNINSULATED SURFACES AND BARE COPPER WINDINGS				
Resistance	80	115	70	100

4. The temperature attained by cores, commutators, and miscellaneous parts (such as brushholders, brushes, pole tips, etc.) shall not injure the insulation or the machine in any respect.

* See MG 1-1.65 for description of classes of insulation.

Authorized Engineering Information 9-17-1981.

† All temperature rises are based on a maximum ambient temperature of 40°C. Temperatures shall be determined in accordance with the latest revision of IEEE Std 113, *Test Code for Direct-current Machines*. Abnormal deterioration of insulation may be expected if this ambient temperature is exceeded in regular operation (this sentence is approved as Authorized Engineering Information).

NEMA Standard 9-17-1981.

▲Revised.

Copyright National Electrical Manufacturers Association
Provided by IHS under license with NEMA
No reproduction or networking permitted without license from IHS
Not for Resale

9009279 0003531 769

Motor-generator Sets for DC Elevator Motors

(A motor-generator set consisting of an open-type induction motor direct-connected to an open-type direct-current adjustable-voltage generator for supplying power to a direct-current elevator motor.)

RATINGS

MG 1-18.451 Basis of Rating

A. The induction motor and the direct-current adjustable-voltage generator shall each have a continuous time rating.

NEMA Standard 11-15-1962.

B. The kilowatt rating of the direct-current adjustable-voltage generator and the horsepower rating of the induction motor do not necessarily bear any definite relation to the rating of the direct-current elevator motor to which they furnish power because of the difference in time rating.

Authorized Engineering Information 11-15-1962.

MG 1-18.452 Generator Voltage Ratings

A. The direct-current adjustable-voltage generator shall be capable of producing the rated voltage of the direct-current elevator motor to which it is supplying power.

NEMA Standard 11-15-1962.

B. Since the direct-current elevator motor and the direct-current adjustable-voltage generator are rated on different bases, the generator rated voltage may be less than that of the direct-current elevator motor. Usually the highest rated voltage of the generator should not exceed 600 volts. Whenever possible, it is recommended that the rated voltage of the generator be 250 volts.

Authorized Engineering Information 11-15-1962.

TESTS AND PERFORMANCE

MG 1-18.453 Variation in Voltage Due to Heating

A. When an elevator direct-current adjustable-voltage generator is intended for use in an open-loop control system, the change in armature voltage from full-load cold to full-load hot, with a fixed voltage applied to the generator field, shall not exceed 10 percent.

B. When an elevator direct-current adjustable-voltage generator is intended for use in a closed-loop control system, the change in armature voltage from full-load cold to full-load hot, with a fixed voltage applied to the generator field, shall not exceed 15 percent.

NEMA Standard 11-15-1962.

MG 1-18.454 Overload

Both the induction motor and the direct-current adjustable-voltage generator shall be capable of supplying the peak load required for the direct-current elevator motor to which it is supplying power. See MG 1-18.431.

NEMA Standard 11-15-1962.

MG 1-18.455 High-potential Test

The various parts of the set shall be given high-potential tests in accordance with MG 1-3.01 for single-phase and polyphase induction motors and in accordance with MG 1-15.48 for direct-current generators.

NEMA Standard 11-15-1962.

MG 1-18.456 Variation from Rated Voltage

All sets shall operate successfully at rated load and frequency with the motor voltage not more than 10 percent above or below the nameplate rating but not necessarily in accordance with the standards established for operation at normal rating.

NEMA Standard 11-15-1962.

Copyright National Electrical Manufacturers Association
Provided by IHS under license with NEMA
No reproduction or networking permitted without license from IHS
Not for Resale

9009279 0003532 6T5

MG 1-18.457 Variation from Rated Frequency

All sets shall operate successfully at rated load and voltage with the motor frequency not more than 5 percent above or below the nameplate rating but not necessarily in accordance with the standards established for operation at normal rating.

NEMA Standard 11-15-1962.

MG 1-18.458 Combined Variation of Voltage and Frequency

All sets shall operate successfully at rated load with a combined variation in motor voltage and frequency not more than 10 percent above or below the nameplate rating, provided the limits of variations given in MG 1-18.456 and MG 1-18.457 are not exceeded, but not necessarily in accordance with the standards established for operation at normal rating.

NEMA Standard 11-15-1962.

MG 1-18.459 Temperature Rise ▲

The temperature rise, above the temperature of the cooling medium, for each of the various parts of each machine in the set, when tested in accordance with their ratings, shall not exceed the following values:

A. INDUCTION MOTORS

See MG 1-12.42

B. DIRECT-CURRENT ADJUSTABLE-VOLTAGE GENERATORS

CLASS OF INSULATION*	A	B
LOAD, PERCENT OF RATED CAPACITY	100	100
TIME RATING	Continuous	Continuous
TEMPERATURE RISE,† DEGREES C		
1. ARMATURE WINDINGS AND ALL OTHER WINDINGS OTHER THAN THOSE GIVEN IN PAR. 2 AND 3		
Resistance	70	100
2. MULTI-LAYER FIELD WINDINGS		
Resistance	70	100
3. SINGLE-LAYER FIELD WINDINGS WITH EXPOSED UNINSULATED SURFACES AND BARE COPPER WINDINGS		
Resistance	70	100
4. The temperature attained by cores, commutators, and miscellaneous parts (such as brushholders, brushes, pole tips, etc.) shall not injure the insulation or the machine in any respect.		

* See MG 1-1.65 for description of classes of insulation.

Authorized Engineering Information 9-17-1981.

† All temperature rises are based on a maximum ambient temperature of 40°C. Temperatures shall be determined in accordance with the latest revision of IEEE STD 113, *Test Code for Direct-current Machines.* Abnormal deterioration of insulation may be expected if this ambient temperature is exceeded in regular operation (this sentence is approved as Authorized Engineering Information).

NEMA Standard 9-17-1981.

▲ Revised.

Copyright National Electrical Manufacturers Association
Provided by IHS under license with NEMA
No reproduction or networking permitted without license from IHS
Not for Resale

9009279 0003533 531

Integral-horsepower AC Polyphase Elevator Motors

MG 1-18.476 Classification According to Electrical Type

POLYPHASE ELEVATOR MOTORS—AC, HIGH-SPEED, CLASS AH

Polyphase, alternating-current, high-speed motors for use with gear-driven elevators shall include:

Class AH

AH1 All single-speed, internal-resistance-type elevator motors having a squirrel-cage secondary or other forms of secondary winding having no external connection and designed for only one synchronous speed.

AH2 All single-speed external-resistance-type elevator motors having a wound secondary with means for connection to an external starting resistance and designed for only one synchronous speed.

AH3 All multispeed, internal-resistance-type elevator motors having a squirrel-cage secondary or other forms of secondary winding having no external connection and designed to give two or more synchronous speeds.

NEMA Standard 12-8-1932, revised 11-12-1953.

RATINGS

MG 1-18.477 Basis of Rating—Elevator Motors

Squirrel-cage elevator motors shall be rated primarily on the basis of locked-rotor torque, but they may also be given a horsepower rating. The horsepower ratings shall be those ratings given under MG 1-18.480 and shall be the brake-horsepower the motor will actually develop without exceeding the standard temperature rise for the standard time rating as given in MG 1-18.482.

NEMA Standard 6-11-1946.

MG 1-18.478 Voltage Ratings

1. Class AH1 motors, 1 horsepower to 10 horsepower, inclusive, at 1200 and 1800 rpm—115 volts.
2. Class AH1 motors other than those covered in item 1, Class AH2 motors, and Class AH3 motors—200, 230, 460 and 575 volts.

NEMA Standard 4-27-1944, revised 11-21-1968; 7-16-1969.

MG 1-18.479 Frequency

The frequency shall be 60 hertz.

NEMA Standard 7-13-1967.

MG 1-18.480 Horsepower and Speed Ratings

Horsepower and speed ratings of open-type, Class AH1, squirrel-cage motors for elevators and similar applications shall be as given in the following table:

HORSEPOWER AND SYNCHRONOUS SPEED RATINGS FOR CLASS AH1, SQUIRREL-CAGE MOTORS, 60 HERTZ, 2 AND 3 PHASE

Hp	Speed, Rpm				
1	1800	1200	...	...	...
2	1800	1200	...	...	...
3	1800	1200	...	...	...
5	1800	1200	900	...	...
7½	1800	1200	900	720	...
10	1800	1200	900	720	600
15	1800	1200	900	720	600
20	1800	1200	900	720	600
25	1800	1200	900	720	600
30	...	...	900	720	600
40	...	...	900	720	600

NEMA Standard 1-22-1931, revised 1-25-1973.

Copyright National Electrical Manufacturers Association
Provided by IHS under license with NEMA
No reproduction or networking permitted without license from IHS
Not for Resale

9009279 0003534 478

TESTS AND PERFORMANCE

(CLASS AH1—AC ELEVATOR MOTORS)

MG 1-18.481 Locked-rotor Torque for Single-speed, Squirrel-cage Elevator Motors

The locked-rotor torque for Class AH1 elevator motors, with rated voltage and frequency applied, shall not be less than 285 percent of rated synchronous torque.

For the selection of gearing and other mechanical design features of the elevator, 335 percent of rated synchronous torque shall be used as a maximum value of locked-rotor torque for Class AH1 elevator motors.

Recommended Standard 5-15-1941; NEMA Standard 11-12-1953.

MG 1-18.482 Time-temperature Rating

The rated horsepower or torque of elevator motors under Class AH1 shall be based on a 30-minute run at rated horsepower or rated torque and corresponding speed with a temperature rise not to exceed the values given in MG 1-12.42.

NEMA Standard 7-21-1932.

MG 1-18.483 High-potential Test

See Mg 1-3.01 and MG 1-12.03.

MG 1-18.484 Variation from Rated Voltage

See MG 1-12.43.

MG 1-18.485 Variation from Rated Frequency

See MG 1-12.44.

MG 1-18.486 Combined Variation of Voltage and Frequency

See MG 1-12.45.

MANUFACTURING

MG 1-18.487 Nameplate Marking

The following minimum amount of information shall be given on the nameplates of all squirrel-cage, high-torque elevator motors. For abbreviations, see MG 1-1.80.

1. Manufacturer's type designation.
2. Horsepower rating.
3. Time rating.
4. Temperature rise.
5. Rpm at full load.
6. Starting torque (pounds at 1 foot).
7. Frequency.
8. Number of phases.
9. Voltage.
10. Full-load amperes.
11. Code letter for locked-rotor kVA (see MG 1-10.36).

NOTE—Item 1 shall be optional.

NEMA Standard 7-21-1932.

Copyright National Electrical Manufacturers Association
Provided by IHS under license with NEMA
No reproduction or networking permitted without license from IHS

Not for Resale

9009279 0003535 304

Integral-horsepower AC Crane Motors

RATINGS

MG 1-18.501 Voltage Ratings ▲

Hp	Voltage Ratings, Volts
	60 HERTZ
1–10, incl.	115, 200, 230, 460 and 575
15–125, incl.	200, 230, 460 and 575
150	460 and 575
	50 HERTZ
1–125, incl.	220 and 380
150	380

NEMA Standard 10-29-1943, revised 6-28-1951; 8-20-1966; 11-21-1968; 7-16-1969; 3-19-1980.

MG 1-18.502 Frequencies

Frequencies shall be 50 and 60 hertz.

Recommended Standard 6-11-1946, NEMA Standard 6-28-1951.

MG 1-18.503 Horsepower and Speed Ratings ▲

Horsepower and speed ratings for intermittent-rated alternating-current wound-rotor crane motors shall be:

hertz	60	60	60	60	60	50	50	50	50	50
Rating Hp	Speed, Rpm									
1	1800	1200	...	...	...	1500	1000	...	...	...
1½	1800	1200	...	...	...	1500	1000	...	...	...
2	1800	1200	900	...	...	1500	1000	750	...	...
3	1800	1200	900	...	...	1500	1000	750	...	...
5	1800	1200	900	...	...	1500	1000	750	...	...
7½	1800	1200	900	...	...	1500	1000	750	...	...
10	1800	1200	900	...	...	1500	1000	750	...	...
15	1800	1200	900	...	...	1500	1000	750	...	...
20	1800	1200	900	720	...	1500	1000	750	600	...
25	1800	1200	900	720	...	1500	1000	750	600	...
30	1800	1200	900	720	...	1500	1000	750	600	...
40	1800	1200	900	720	600	1500	1000	750	600	500
50	1800	1200	900	720	600	1500	1000	750	600	500
60	1800	1200	900	720	600	1500	1000	750	600	500
75	1800	1200	900	720	600	1500	1000	750	600	500
100	1800	1200	900	720	600	1500	1000	750	600	500
125	1800	1200	...	720	600	1500	1000	...	600	500
150	1800	...	...	...	600	1500	...	...	...	500

Recommended Standard 6-11-1946, revised 6-28-1951, NEMA Standard 11-12-1953, revised 3-19-1980.

MG 1-18.504 Secondary Data for Wound-rotor Crane Motors

Hp Rating	Secondary Volts*	Maximum Secondary Amperes	External Resistance, Ohms	Hp Rating	Secondary Volts*	Maximum Secondary Amperes	External Resistance, Ohms
1	90	6	7	25	220	60	1.75
1½	110	7.3	7	30	240	65	1.75
2	120	8.4	7	40	315	60	2.75
3	145	10	7	50	350	67	2.75
5	140	19	3.5	60	375	74	2.75
7½	165	23	3.5	75	385	90	2.30
10	195	26.5	3.5	100	360	130	1.50
15	240	32.5	3.5	125	385	150	1.40
20	265	38	3.5	150	380	185	1.10

*Tolerance plus or minus 10 percent.
NOTE I—Resistance values have a plus or minus 5 percent tolerance.
NOTE II—100 percent external ohms is the resistance per leg in a 3-phase wye-connected bank of resistance which will limit the motor locked-rotor torque to 100 percent.

For 1–30 HP ratings—Suggested Standard for Future Design 11-12-1953, NEMA Standard 11-15-1956.
For 40–150 HP ratings—Suggested Standard for Future Design 11-17-1960, reaffirmed 8-19-1964; 7-13-1967, revised 9-20-1968; 11-13-1969, NEMA Standard 3-14-1979.

▲ Revised.

Copyright National Electrical Manufacturers Association
Provided by IHS under license with NEMA
No reproduction or networking permitted without license from IHS
Not for Resale

9009279 0003536 240

MG 1-18.505 Nameplate Marking

The following minimum amount of information shall be given on all nameplates. For abbreviations, see MG 1-1.80.

1. Manufacturer's type and frame designation.
2. Horsepower output.
3. Time rating.
4. Class of insulation system and maximum ambient temperature for which motor is designed (see Note I of MG 1-12.42).
5. Rpm at full load.
6. Frequency.
7. Number of phases.
8. Voltage.
9. Full-load primary amperes.
10. Secondary amperes at full load.
11. Secondary open-circuit voltage.

NEMA Standard 12-8-1932, revised 6-28-1951; 11-12-1970.

MG 1-18.506 Frame Sizes for 2- and 3-phase 60-hertz Open and Totally-enclosed Wound-rotor Crane Motors having Class B Insulation System

Hp Rating		Speed, Rpm		
		1800	1200	900
		Frame Designation*		
10	30 minutes, open	256X	284X	286X
15		284X	286X	324X
20	30 minutes, totally-enclosed	286X	324X	326X
25		324X	326X	364X
30		326X	364X	364X
40		364X	364X	365X
50	60 minutes, open	364X	365X	404X
60		365X	404X	405X
75	30 minutes, totally-enclosed	404X	405X	444X
100		405X	444X	445X
125		444X	445X	...
150		445X	...	...

* Dimensions for these frame designations are given in MG 1-18.520.

Suggested Standard for Future Design 5-24-1960, reaffirmed 8-19-1964, NEMA Standard 11-16-1967, revised 11-12-1970.

TESTS AND PERFORMANCE

MG 1-18.507 Time Ratings

The time ratings for open and totally-enclosed alternating-current wound-rotor motors shall be 15, 30 and 60 minutes.

NEMA Standard 6-28-1951.

MG 1-18.508 Temperature Rise

For temperature rise of Class B insulation system, see MG 1-12.42.

NEMA Standard 8-5-1930, revised 6-28-1951; 11-12-1970.

MG 1-18.509 Breakdown Torque

A. The breakdown torque for alternating-current wound-rotor crane motors, with rated voltage and frequency applied, shall be not less than 275 percent of full-load torque.

B. For the selection of gearing and other mechanical design features of the crane, 375 percent of rated full-load torque shall be used as the maximum value of breakdown torque for an alternating-current would-rotor crane motor.

NEMA Standard 11-19-1931, revised 6-28-1951.

Copyright National Electrical Manufacturers Association
Provided by IHS under license with NEMA
No reproduction or networking permitted without license from IHS
Not for Resale

9009279 0003537 187

MG 1-18.510 High-potential Test

See MG 1-3.01 and MG 1-12.03.

MG 1-18.511 Overspeeds

Alternating-current wound-rotor crane motors having standard horsepower and speed ratings and built in frame sizes given in MG 1-18.506 shall be so constructed that they will withstand, without mechanical injury, an overspeed which is 50 percent above synchronous speed.

NEMA Standard 6-28-1951.

MG 1-18.512 Plugging

Alternating-current wound-rotor crane motors shall be designed to withstand reversal of the phase rotation of the power supply at rated voltage when running at the overspeed given in MG 1-18.511.

NEMA Standard 6-28-1951.

MG 1-18.513 Variation from Rated Voltage

See MG 1-12.43.

MG 1-18.514 Variation from Rated Frequency

See MG 1-12.44.

MG 1-18.515 Combined Variation of Voltage and Frequency

See MG 1-12.45.

MG 1-18.516 Routine Tests

The routine tests shall be:

1. No-load readings of current and speed at normal voltage and frequency and with collector rings short-circuited. On 50-hertz motors, these readings may be taken at 60 hertz if 50 hertz are not available.
2. Measurement of open-circuit voltage ratio.
3. High-potential test in accordance with MG 1-3.01 and MG 1-12.03.

Recommended Standard 6-28-1951, NEMA Standard 11-12-1953.

MG 1-18.517 Balance of Motors

See MG 1-12.05.

NEMA Standard 6-28-1961, revised 11-12-1959.

MG 1-18.518 Bearings

Bearings for wound-rotor crane motors shall be of the antifriction type.

NEMA Standard 6-28-1951.

Copyright National Electrical Manufacturers Association
Provided by IHS under license with NEMA
No reproduction or networking permitted without license from IHS
Not for Resale

9009279 0003538 013

MANUFACTURING

MG 1-18.519 Dimensions for Alternating-current, Wound-rotor, Open and Totally-enclosed Crane Motors ●

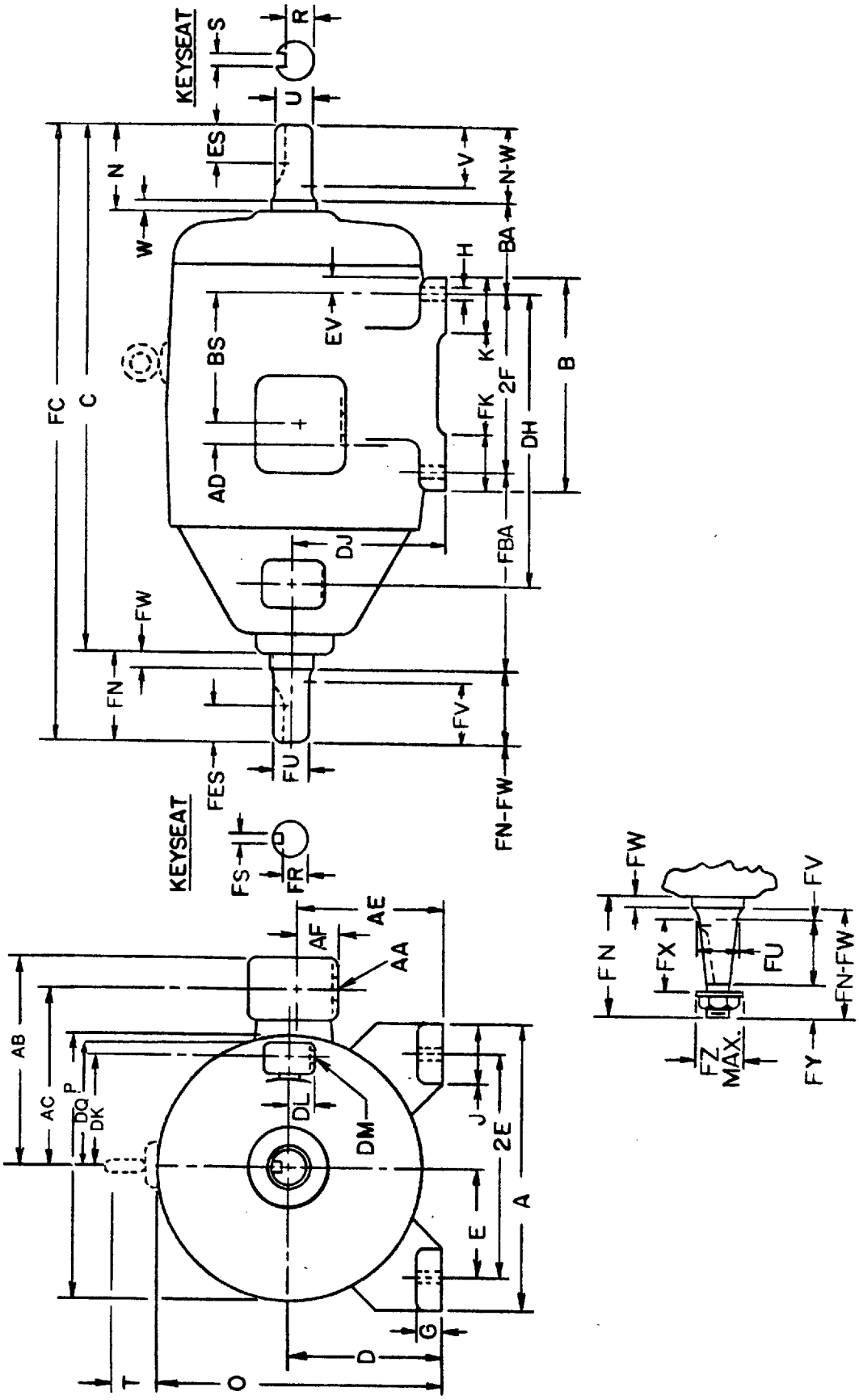

NOTE—See MG 1-18.520 for shaft style at end opposite drive.

● Editorially revised.

NEMA Standard 6-28-1951, revised 3-19-1980.

Copyright National Electrical Manufacturers Association
Provided by IHS under license with NEMA
No reproduction or networking permitted without license from IHS

Not for Resale

9009279 0003539 T5T

MG 1-18.520 Dimensions and Tolerances for Alternating-current, Open and Totally-enclosed, Wound-rotor Crane Motors having Antifriction Bearings

Frame Designation	A Max	B Max	D*	E†	2F†	AA Min	BA	H†
254X	12.50	10.75	6.25	5.00	8.25	1	4.25	0.53
256X	12.50	12.50	6.25	5.00	10.00	1	4.25	0.53
284X	14.00	12.50	7.00	5.50	9.50	1¼	4.75	0.53
286X	14.00	14.00	7.00	5.50	11.00	1¼	4.75	0.53
324X	16.00	14.00	8.00	6.25	10.50	1½	5.25	0.66
326X	16.00	15.50	8.00	6.25	12.00	1½	5.25	0.66
364X	18.00	15.25	9.00	7.00	11.25	2	5.88	0.66
365X	18.00	16.25	9.00	7.00	12.25	2	5.88	0.66
404X	20.00	16.25	10.00	8.00	12.25	2	6.62	0.81
405X	20.00	17.75	10.00	8.00	13.75	2	6.62	0.81
444X	22.00	18.50	11.00	9.00	14.50	2½	7.50	0.81
445X	22.00	20.50	11.00	9.00	16.50	2½	7.50	0.81

	Drive End—Straight Shaft Extension					
				Keyseat		
Frame Designation	U	N–W	V Min	R	ES Min	S
254X	1.3750	3.75	3.50	1.201	2.78	0.312
256X	1.3750	3.75	3.50	1.201	2.78	0.312
284X	1.625	3.75	3.50	1.416	2.53	0.375
286X	1.625	3.75	3.50	1.416	2.53	0.375
324X	1.875	3.75	3.50	1.591	2.41	0.500
326X	1.875	3.75	3.50	1.591	2.41	0.500
364X	2.375	4.75	4.50	2.021	3.03	0.625
365X	2.375	4.75	4.50	2.021	3.03	0.625
404X	2.875	5.75	5.50	2.450	3.78	0.750
405X	2.875	5.75	5.50	2.450	3.78	0.750
444X	3.375	5.50	5.25	2.880	4.03	0.875
445X	3.375	5.50	5.25	2.880	4.03	0.875

	Opposite Drive End—Shaft Extension										
									Keyseat		
Frame Designation	Shaft Style	FU	FN–FW	FV‡	FX	FY	FZ Max	Shaft, Threaded	Width	Depth	Length**
254X	Straight	1.1250	3.00	2.75	....	....	....	....	0.250	0.125	2.41
256X	Straight	1.1250	3.00	2.75	....	....	....	....	0.250	0.125	2.41
284X	Tapered	1.3750	4.12	2.62	2.75	1.25	2.00	1–12	0.312	0.156	2.25
286X	Tapered	1.3750	4.12	2.62	2.75	1.25	2.00	1–12	0.312	0.156	2.25
324X	Tapered	1.625	4.50	2.88	3.00	1.25	2.00	1–12	0.375	0.188	2.50
326X	Tapered	1.625	4.50	2.88	3.00	1.25	2.00	1–12	0.375	0.188	2.50
364X	Tapered	2.125	4.88	3.50	3.62	1.38	2.75	1½–8	0.500	0.250	3.25
365X	Tapered	2.125	4.88	3.50	3.62	1.38	2.75	1½–8	0.500	0.250	3.25
404X	Tapered	2.375	5.25	3.75	3.88	1.50	3.25	1¾–8	0.625	0.312	3.50
405X	Tapered	2.375	5.25	3.75	3.88	1.50	3.25	1¾–8	0.625	0.312	3.50
444X	Tapered	2.625	5.88	4.12	4.25	1.75	3.62	2–8	0.625	0.312	3.88
445X	Tapered	2.625	5.88	4.12	4.25	1.75	3.62	2–8	0.625	0.312	3.88

All dimensions in inches.

* Dimension D will never be greater than the above values, but it may be less so that shims are usually required for coupled or geared machines When the exact dimension is required, shims up to 0.03 inch may be necessary.
† The tolerance for the 2E and 2F dimensions shall be ±0.03 inch and for the H dimension shall be +0.05 inch, −0 inch.
‡ For straight shafts, this is a minimum dimension.
** The tolerance on the length of the key is ±0.03 inch.

NOTE I—For the meaning of letter dimensions, see MG 1-4.01 and MG 1-18.519.
NOTE II—For tolerances on shaft extensions and keyseats, see MG 1-4.05.
NOTE III—It is recommended that all motors with keyseats cut in the shaft extension for pulley, coupling, pinion, etc., be furnished with a key unless otherwise specified by the purchaser.
NOTE IV—Tapered Shafts—The standard taper of shafts shall be at the rate of 1.25 inches in diameter per foot of length. The thread at the end of the tapered shaft shall be provided with a nut and a suitable locking device.
NOTE V—Rescinded.
NOTE VI—Rescinded.
NOTE VII—Rescinded.

(*Continued*)

Copyright National Electrical Manufacturers Association
Provided by IHS under license with NEMA
No reproduction or networking permitted without license from IHS
Not for Resale

9009279 0003540 771

NOTE VIII—Rescinded.
NOTE IX—Rescinded.

Suggested Standard for Future Design 11-15-1956, revised 6-30-1958; 11-13-1958; 5-24-1960, NEMA Standard 11-9-1961, revised 1-21-1964; 1-25-1973; 3-14-1979.

Copyright National Electrical Manufacturers Association
Provided by IHS under license with NEMA
No reproduction or networking permitted without license from IHS
Not for Resale

9009279 0003541 608

Integral-horsepower Shell-type Motors for Woodworking and Machine-tool Applications

MG 1-18.526 Definition of Shell-type Motor

A shell-type motor consists of a stator and rotor without shaft, end shields, bearings or conventional frame. Separate fans or fans larger than the rotor are not included.

NEMA Standard 5-20-1938.

MG 1-18.527 Temperature Rise—Shell-type Motor

The temperature rise of a shell-type motor depends on the design of the ventilating system as well as on the motor losses. The motor manufacturer's responsibility is limited to (a) supplying motors with losses, characteristics, current densities and flux densities consistent with complete motors of similar ratings, size and proportion, and (b) when requested, supplying information regarding the design of a ventilating system which will dissipate the losses within the rated temperature rise.

Therefore, obviously, the machine manufacturer is ultimately responsible for the temperature rise.

Recommended Standard 5-16-1940, NEMA Standard 11-12-1953.

MG 1-18.528 Temperature Rise for 60-hertz Shell-type Motors Operated on 50 hertz

When 40°C continuous 60-hertz single-speed, shell-type motors are designed as suitable for operation on 50-hertz circuits at the 60-hertz voltage and horsepower rating, they will operate without injurious heating if the ventilation system is in accordance with the motor manufacturers' recommendations.

Recommended Standard 6-11-1946, NEMA Standard 11-12-1953.

MG 1-18.529 Operation at Other Frequencies—Shell-type Motors

All 2-pole, 40°C continuous, 60-hertz, shell-type motors shall be capable of operating on proportionally increased voltage at frequencies up to and including 120 hertz. The horsepower load may be increased in proportion to one half of the increased speed.

Recommended Standard 5-16-1940, NEMA Standard 11-12-1953.

Copyright National Electrical Manufacturers Association
Provided by IHS under license with NEMA
No reproduction or networking permitted without license from IHS
Not for Resale

9009279 0003542 544

MG 1-18.530 Ratings and Dimensions for Shell-type Motors

SHELL-TYPE MOTORS

ROTOR BORE AND KEYWAY DIMENSIONS
3-PHASE—60-HERTZ—40°C OPEN MOTORS
208, 220, 440, 550 VOLTS

STRAIGHT ROTOR BORE MOTORS

Hp Rating	Rotor Bores			Rotor Keyways	
Two Pole	Normal Diam., Inches	Maximum Diam., Inches	Minimum Diam., Inches	Bores, Inches	Keys, Inches
		BH = 8-INCH DIAMETER			
1½ to 10	1½	2	None	1½ to 1¾, incl. 2	⅜x3/16 ½x¼
		BH = 10-INCH DIAMETER			
7½ to 20	1⅞	2⅜—4-, 6- & 8-pole motors*	None	1⅞	⅜x3/16
		2⅛—2-pole motors	None	2 to 2⅜, incl.	½x¼
		BH = 12.375-INCH DIAMETER			
15 to 25	2¼	2¾		2¼ to 2½, incl. 2¾	½x¼ ¾x⅜

* All other 4-, 6- and 8-pole hp ratings will have same rotor bore as 2-pole ratings by frame size.
NOTE—See MG 1-18.531.

ROTOR BORES (TAPERED)

BH Dimension	Range of Bore on Big End
8	1¾ to 2 inches—For all pole combinations
10	2.125 to 2.375 inches—For 4, 6 and 8 poles
	2.125 to 2.25 inches—For 2 poles
12.375	2.5 to 2.75 inches—For all pole combinations

NOTE I—All rotor bore dimensions are on the basis of using magnetic shaft material.
NOTE II—See MG 1-18.531.

The small-end diameter will be whatever comes depending on length of rotor using ¼ inch taper per foot.

SHELL-TYPE MOTORS

BH AND BJ DIMENSIONS IN INCHES
OPEN TYPE, 3-PHASE, 60-HERTZ, 40°C CONTINUOUS
208, 220, 440, AND 550 VOLTS

Horsepower				BJ Maximum		
Poles				Poles		
2	4	6	8	2	4	6 and 8
			BH = 8-INCH DIAMETER			
1½	1	¾	..	6¾	6⅜	6⅛
2	1½	1	½	7½	7⅛	6⅞
3	2	1½	¾	8	7⅝	7⅜
5	3	2	1	9⅜	9	8¾
7½	5	3	1½	11½	11⅛	10⅞
10	..	..	..	13½	..	..
			BH = 10-INCH DIAMETER			
7½	5	3	2	9½	9	8⅝
10	7½	5	3	11	10½	10⅛
15	10	7½	5	12¾	12¼	11⅞
20	15	10	7½	14½	14	13⅝
			BH = 12.375-INCH DIAMETER			
15	10	7½	5	11	10⅜	9⅞
20	15	10	7½	12¼	11⅝	11⅛
25	20	15	10	13½	12⅞	12⅜

$$\text{Maximum BK} = \frac{\text{Maximum BJ}}{2} + \frac{1}{4}$$

NOTE—See MG 1-18.531.

NEMA Standard 4-27-1944.

Copyright National Electrical Manufacturers Association
Provided by IHS under license with NEMA
No reproduction or networking permitted without license from IHS
Not for Resale

9009279 0003543 480

MG 1-18.531 Lettering for Dimension Sheets for Shell-type Motors

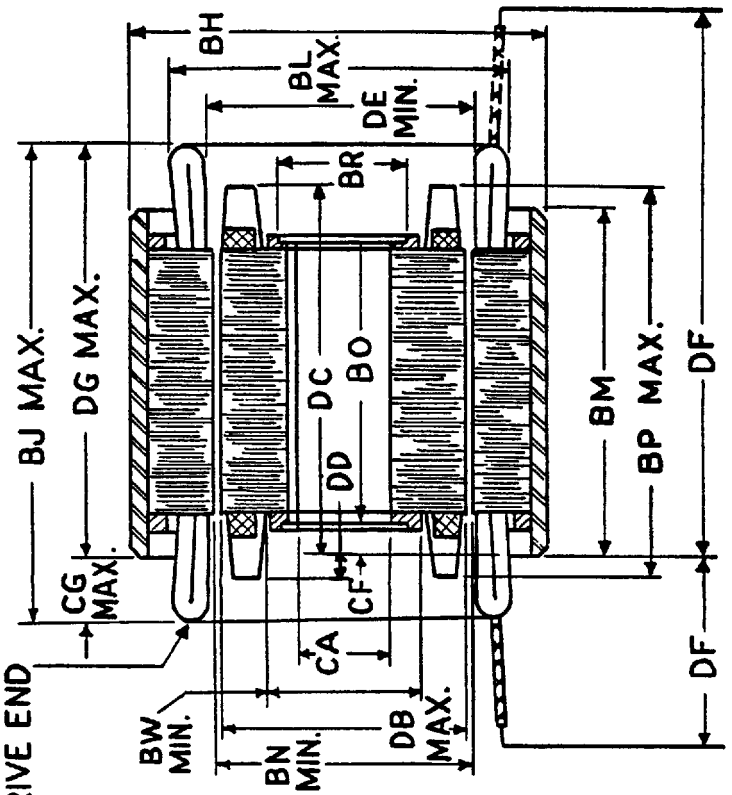

NEMA Standard 4-27-1944; revised 8-7-1952.

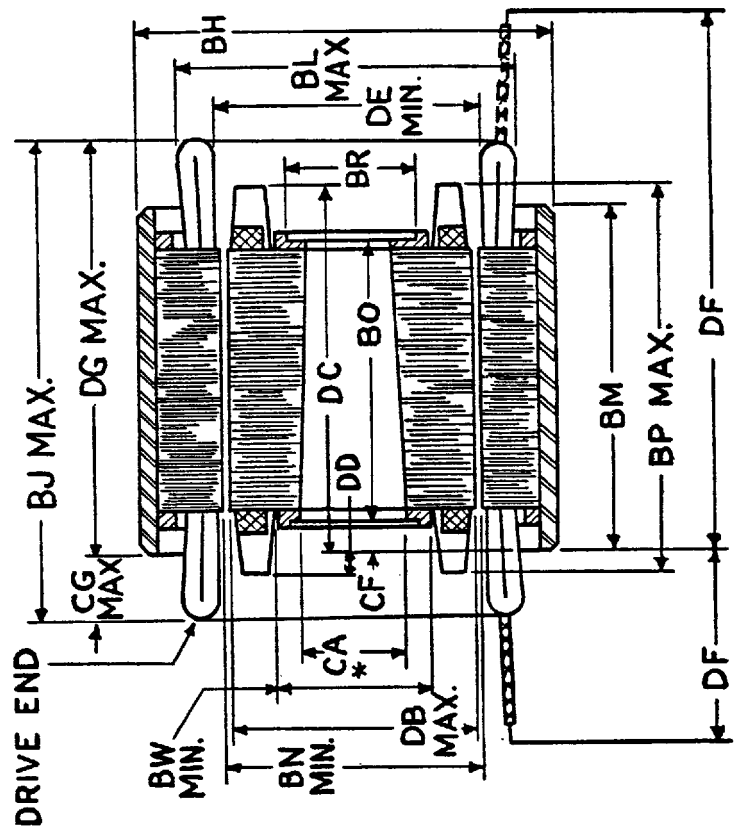

NOTE—For the meaning of the letter dimensions, see MG 1-4.02.

Copyright National Electrical Manufacturers Association
Provided by IHS under license with NEMA
No reproduction or networking permitted without license from IHS
Not for Resale

9009279 0003544 317

High-frequency Industrial Motors, Generators and Frequency Converters

RATINGS

MG 1-18.551 Voltage and Frequency Ratings of Motors

Rescinded 9-20-1978.

MG 1-18.552 Generator and Frequency Converter Rating

Rescinded 9-20-1978.

TESTS AND PERFORMANCE

MG 1-18.554 Temperature Rise of Generators and Frequency Converters

Rescinded 9-20-1978.

MG 1-18.555 Voltage Regulation

Rescinded 9-20-1978.

Copyright National Electrical Manufacturers Association
Provided by IHS under license with NEMA
No reproduction or networking permitted without license from IHS

Not for Resale

9009279 0003545 253

Integral-horsepower AC Squirrel-cage Induction Motors for Vertical Turbine Pump Applications

MG 1-18.590 Dimensions for Type VP Vertical Solid-shaft, Single-phase and Polyphase, Direct-connected Squirrel-cage Induction Motors for Vertical Turbine Pump Applications▲

(This standard was developed jointly with the Vertical Turbine Pump Association, now the Hydraulic Institute.)

Frame Designations	AJ†	AK	BB Min	BD Max	BF Clearance Hole	
					Number	Size
143VP and 145VP	9.125	8.250	0.19	10.00	4	0.44
182VP and 184VP	9.125	8.250	0.19	10.00	4	0.44
213VP and 215VP	9.125	8.250	0.19	10.00	4	0.44
254VP and 256VP	9.125	8.250	0.19	10.00	4	0.44
284VP and 286VP	9.125	8.250	0.19	10.00	4	0.44
324VP and 326VP	14.750	13.500	0.25	16.50	4	0.69
364VP and 365VP	14.750	13.500	0.25	16.50	4	0.69
404VP and 405VP	14.750	13.500	0.25	16.50	4	0.69
444VP and 445VP	14.750	13.500	0.25	16.50	4	0.69

Frame Designations	U	V Min	AH*	Keyseat			EU
				R	ES Min	S	
143VP and 145VP	0.8750	2.75	2.75	0.771–0.756	1.28	0.190–0.188	0.6875
182VP and 184VP	1.1250	2.75	2.75	0.986–0.971	1.28	0.252–0.250	0.8750
213VP and 215VP	1.1250	2.75	2.75	0.986–0.971	1.28	0.252–0.250	0.8750
254VP and 256VP	1.1250	2.75	2.75	0.986–0.971	1.28	0.252–0.250	0.8750
284VP and 286VP	1.1250	2.75	2.75	0.986–0.971	1.28	0.252–0.250	0.8750
324VP and 326VP	1.625	4.50	4.50	1.416–1.401	3.03	0.377–0.375	1.2500
364VP and 365VP	1.625	4.50	4.50	1.416–1.401	3.03	0.377–0.375	1.2500
404VP and 405VP	1.625	4.50	4.50	1.416–1.401	3.03	0.377–0.375	1.2500
444VP and 445VP	2.125	4.50	4.50	1.845–1.830	3.03	0.502–0.500	1.7500

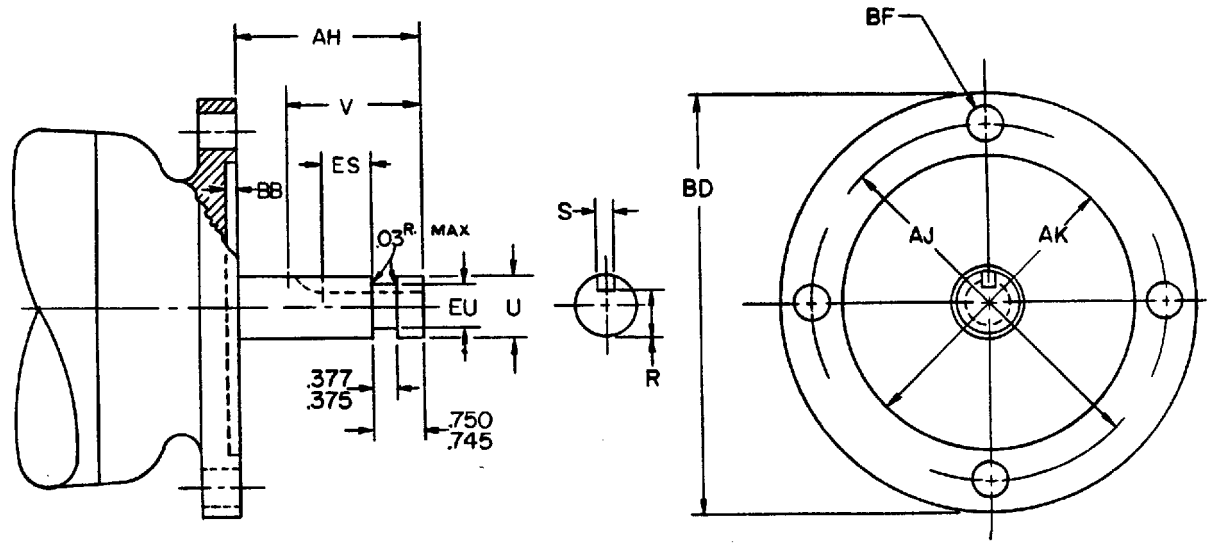

All dimensions in inches.

* Dimension measured with motor in vertical position shaft down.
† AJ dimension—centerline of bolt holes within 0.025 inch of true location. True location is defined as angular and diametrical location with reference to the centerline of the AK dimension.

NOTE I—For the meaning of the letter dimensions, see MG 1-4.01.

NOTE II—The assignment of horsepower and speed ratings to these frames shall be in accordance with NEMA Publication No. MG 13, except for the inclusion of the suffix letters VP in place of the suffix letters T and TS.

Tolerances (see MG 1-4.06)—
AH Dimension—±0.06 inch.
AK Dimension—8.250 inches, +0.003 inch, −0.000 inch.
13.500 inches, +0.005 inch, −0.000 inch.
EU Dimension—+0.000 inch, −0.005 inch.
Face Runout and Permissible Eccentricity of Mounting Rabbet—
For AK dimension of 8.250 inches, 0.004-inch indicator reading.
For AK dimension of 13.500 inches, 0.007-inch indicator reading.
Permissible Shaft Runout—
For AK dimension of 8.250 inches, 0.002-inch indicator reading.
For AK dimension of 13.500 inches, 0.002-inch indicator reading.

Suggested Standard for Future Design 7-13-1967, revised 7-17-1968; 7-15-1970, NEMA Standard 3-14-1979.

▲ Revised.

Copyright National Electrical Manufacturers Association
Provided by IHS under license with NEMA
No reproduction or networking permitted without license from IHS
Not for Resale

9009279 0003546 19T

MG1-18.591 Dimensions for Type P and PH Alternating-current Squirrel-cage Vertical Hollow-shaft Motors for Vertical Turbine Pump Applications

(This standard was developed jointly with the Vertical Turbine Pump Association, now the Hydraulic Institute.)

A. Base Dimensions

Item	Frame Designation	AJ**	AK†	BB Min	BD Max	BF Clearance	BF Tap Size	BF Number	EO Min
1	182TP	9.125	8.250	0.19	10.00	0.44	...	4	2.50
2	184TP	9.125	8.250	0.19	10.00	0.44	....	4	2.50
3	213TP	9.125	8.250	0.19	10.00	0.44	....	4	2.50
4	215TP	9.125	8.250	0.19	10.00	0.44	....	4	2.50
5	254TP	9.125	8.250	0.19	10.00	0.44	....	4	2.75
6	256TP	9.125	8.250	0.19	10.00	0.44	....	4	2.75
7	284TP*	9.125	8.250	0.19	10.00	0.44	....	4	2.75
8	286TP*	9.125	8.250	0.19	10.00	0.44	....	4	2.75
9	324TP*	14.750	13.500	0.25	16.50	0.69	....	4	4.00
10	326TP*	14.750	13.500	0.25	16.50	0.69	....	4	4.00
11	364TP	14.750	13.500	0.25	16.50	0.69	....	4	4.00
12	365TP	14.750	13.500	0.25	16.50	0.69	....	4	4.00
13	404TP	14.750	13.500	0.25	16.50	0.69	....	4	4.50
14	405TP	14.750	13.500	0.25	16.50	0.69	....	4	4.50
15	444TP	14.750	13.500	0.25	16.50	0.69	....	4	5.00
16	445TP	14.750	13.500	0.25	16.50	0.69	....	4	5.00
17	....	14.750	13.500	0.25	20.00	0.69	....	4	....
18	....	14.750	13.500	0.25	24.50	0.69‡	5/8–11	4	....
19	....	26.000	22.000	0.25	30.50	0.81‡	3/4–10	4	....

All dimensions in inches.

* These frames have the following alternate base dimensions, the coupling dimensions given in par. B remaining unchanged:

Frame Designations	Base Dimensions AJ	AK†	BB Min	BD Max	BF Clearance	BF Tap Size	BF Number	EO Min
324TPH	9.125	8.250	0.19	12.00	0.44	....	4	4.00
326TPH	9.125	8.250	0.19	12.00	0.44	....	4	4.00
284TPH	14.750	13.500	0.25	16.50	0.69	....	4	2.75
286TPH	14.750	13.500	0.25	16.50	0.69	....	4	2.75

† Tolerances on AK dimension—8.250 inches, +0.003 inch. −0.000 inch; 13.500 and 22.000 inches, +0.005 inch, −0.000 inch.
‡ Either clearance hole or tap size should be specified.
** AJ dimension—centerline of bolt holes within 0.025 inch of true location. True location is defined as angular and diametrical location with reference to the centerline of the AK dimension.
NOTE I—For the meaning of the letter dimensions, see MG 1-4.01 and Fig. 4-5.
NOTE II—See par. B for the coupling dimensions of the motors covered in items 1 through 16.
NOTE III—Tolerances on face runout and permissible eccentricity of mounting rabbet (see MG 1-4.06)—
For AK dimension of 8.250 inches, 0.004-inch indicator reading.
For AK dimension of 13.500 and 22.000 inches, 0.007-inch indicator reading.

Copyright National Electrical Manufacturers Association
Provided by IHS under license with NEMA
No reproduction or networking permitted without license from IHS
Not for Resale

9009279 0003547 026

B. Coupling Dimensions ▲

	Coupling Dimensions									
	Standard Bore					Maximum Bore				
Item**	BX††	EW	R	BY	BZ	BX††	EW	R	BY	BZ
1	0.751	0.188–0.190	0.837–0.847	10–32	1.375	1.001	0.250–0.252	1.114–1.124	10–32	1.375
2	0.751	0.188–0.190	0.837–0.847	10–32	1.375	1.001	0.250–0.252	1.114–1.124	10–32	1.375
3	0.751	0.188–0.190	0.837–0.847	10–32	1.375	1.001	0.250–0.252	1.114–1.124	10–32	1.375
4	0.751	0.188–0.190	0.837–0.847	10–32	1.375	1.001	0.250–0.252	1.114–1.124	10–32	1.375
5	1.001	0.250–0.252	1.114–1.124	10–32	1.375	1.251	0.250–0.252	1.367–1.377	¼–20	1.750
6	1.001	0.250–0.252	1.114–1.124	10–32	1.375	1.251	0.250–0.252	1.367–1.377	¼–20	1.750
7	1.001	0.250–0.252	1.114–1.124	10–32	1.375	1.251	0.250–0.252	1.367–1.377	¼–20	1.750
8	1.001	0.250–0.252	1.114–1.124	10–32	1.375	1.251	0.250–0.252	1.367–1.377	¼–20	1.750
9	1.188	0.250–0.252	1.304–1.314	¼–20	1.750	1.501	0.375–0.377	1.669–1.679	¼–20	2.125
10	1.188	0.250–0.252	1.304–1.314	¼–20	1.750	1.501	0.375–0.377	1.669–1.679	¼–20	2.125
11	1.188	0.250–0.252	1.304–1.314	¼–20	1.750	1.501	0.375–0.377	1.669–1.679	¼–20	2.125
12	1.188	0.250–0.252	1.304–1.314	¼–20	1.750	1.501	0.375–0.377	1.669–1.679	¼–20	2.125
13	1.438	0.375–0.377	1.605–1.615	¼–20	2.125	1.688	0.375–0.377	1.859–1.869	¼–20	2.500
14	1.438	0.375–0.377	1.605–1.615	¼–20	2.125	1.688	0.375–0.377	1.859–1.869	¼–20	2.500
15	1.688	0.375–0.377	1.859–1.869	¼–20	2.500	1.938	0.500–0.502	2.160–2.170	¼–20	2.500
16	1.688	0.375–0.377	1.859–1.869	¼–20	2.500	1.938	0.500–0.502	2.160–2.170	¼–20	2.500

All dimensions in inches.

** See the correspondingly numbered item in par. A for the frame designations and base dimensions of the motors to which these coupling dimensions apply.
†† Tolerance on BX dimension—up to and including 1.5000 inch diameter, +0.001 inch. −0.000 inch; larger than 1.5000 inch diameter, +0.0015 inch, −0.000 inch.
NOTE—For the meaning of the letter dimensions, see MG 1-4.01 and Fig. 4-5.

Suggested Standard for Future Design 11-17-1966, revised 7-17-1968; 11-21-1968; NEMA Standard 7-16-1969, revised 11-13-1969; 3-14-1979.

▲ Revised.

Copyright National Electrical Manufacturers Association
Provided by IHS under license with NEMA
No reproduction or networking permitted without license from IHS
Not for Resale

9009279 0003548 T62

Integral-horsepower AC Squirrel-cage Induction Motors for Close-coupled Pumps

(A face-mounted close-coupled pump motor is an integral-horsepower, alternating-current, squirrel-cage, induction, open or totally-enclosed motor, with or without feet, having a shaft suitable for mounting an impeller and sealing device. For explosion-proof motors, see Note III of Fig. 1 of MG 1-18.614.)

RATINGS

MG 1-18.601 Voltage Ratings

See MG 1-10.30.

MG 1-18.602 Frequencies▲

See MG 1-10.31A.

MG 1-18.603 Nameplate Markings

See MG 1-10.38.

MG 1-18.604 Nameplate Time Ratings

See MG 1-10.35.

TESTS AND PERFORMANCE

MG 1-18.605 Temperature Rise

See MG 1-12.42.

MG 1-18.606 Torques

For single-phase integral-horsepower motors, see MG 1-12.31.

For polyphase integral-horsepower motors, see MG 1-12.37, MG 1-12.38 and MG 1-12.39.

MG 1-18.607 Locked-rotor Currents

For single-phase integral-horsepower motors, see MG 1-12.33.

For three-phase integral-horsepower motors, see MG 1-12.34 and MG 1-12.35.

MG 1-18.608 High-potential Test

See MG 1-3.01 and MG 1-12.03.

MG 1-18.609 Variation from Rated Voltage

See MG 1-12.43.

MG 1-18.610 Variation from Rated Frequency

See MG 1-12.44.

MG 1-18.611 Combined Variation of Voltage and Frequency

See MG 1-12.45.

MG 1-18.612 Balance of Motors

See MG 1-12.05.

MANUFACTURING

MG 1-18.613 Frame Assignments▲

Frame assignments shall be in accordance with NEMA Publication No. MG 13, except for the omission of the suffix letters T and TS and the inclusion of the suffix letters in accordance with MG 1-18.614, i.e., 254JP.

Suggested Standard for Future Design 11-21-1968, NEMA Standard 3-14-1979.

▲ Revised.

Copyright National Electrical Manufacturers Association
Provided by IHS under license with NEMA
No reproduction or networking permitted without license from IHS
Not for Resale

9009279 0003549 9T9

MG 1-18.614 Dimensions for Types JM and JP Alternating-current Face-mounted Close-coupled Pump Motors Having Antifriction Bearings▲

(This standard was developed jointly with the Hydraulic Institute.)

See Fig. 1 and Tables 1 and 2.

Suggested Standard for Future Design 7-17-1968, NEMA Standard 3-14-1979.

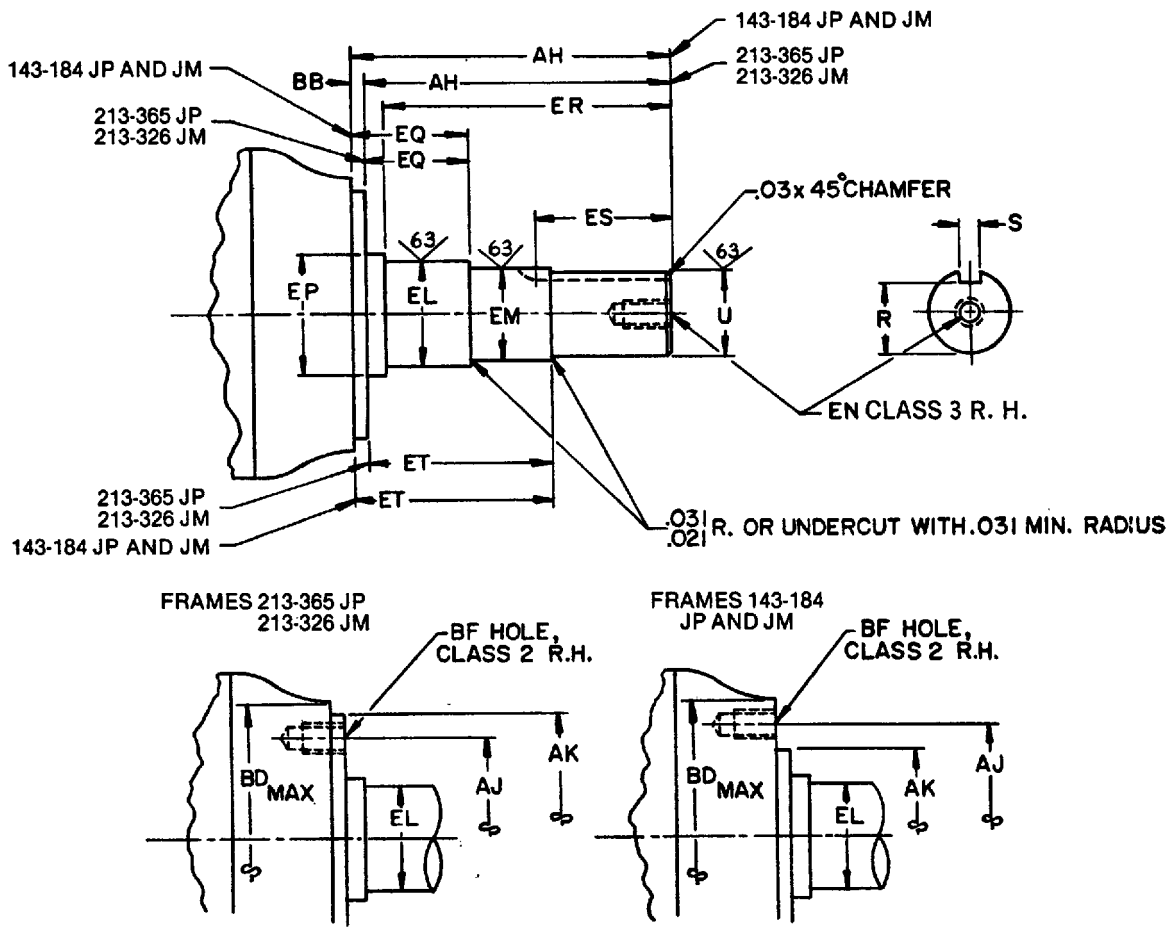

Fig. 1 of MG 1-18.614

NOTE I—AH, EQ and ET dimensions measured with the shaft pulled by hand away from the motor to the limit of end play.
NOTE II—AJ dimension—centerline of bolt holes is within 0.015 inch of true location for frames 143 to 256 JM and JP, inclusive, and within 0.025 inch of true location for frames 284 to 365 JM and JP, inclusive. True location is defined as angular and diametrical location with reference to the centerline of the AK dimension.
NOTE III—Shaft end play shall not exceed the bearing internal axial movement. Bearing mounting fits shall be as recommended for pump application by the bearing manufacturer. (This note applies to open and totally-enclosed motors. For explosion-proof motors, the individual motor manufacturer should be contacted.)

▲ Revised.

Copyright National Electrical Manufacturers Association
Provided by IHS under license with NEMA
No reproduction or networking permitted without license from IHS
Not for Resale

Copyright National Electrical Manufacturers Association
Provided by IHS under license with NEMA
No reproduction or networking permitted without license from IHS

9009279 0003550 610

TABLE 1 OF MG 1-18.614
DIMENSIONS FOR TYPE JM ALTERNATING-CURRENT FACE-MOUNTED CLOSE-COUPLED PUMP MOTORS

Frame Designations	U	AH*	AJ†	AK	BB	BD Max	BF		
							Number	Tap Size	Bolt Penetration Allowance
143JM and 145JM	0.8745 0.8740	4.281 4.219	5.875	4.500 4.497	0.156 0.125	6.62	4	3/8–16	0.56
182JM and 184JM	0.8745 0.8740	4.281 4.219	5.875	4.500 4.497	0.156 0.125	6.62	4	3/8–16	0.56
213JM and 215JM	0.8745 0.8740	4.281 4.219	7.250	8.500 8.497	0.312 0.250	9.00	4	1/2–13	0.75
254JM and 256JM	1.2495 1.2490	5.281 5.219	7.250	8.500 8.497	0.312 0.250	10.00	4	1/2–13	0.75
284JM and 286JM	1.2495 1.2490	5.281 5.219	11.000	12.500 12.495	0.312 0.250	14.00	4	5/8–11	0.94
324JM and 326JM	1.2495 1.2490	5.281 5.219	11.000	12.500 12.495	0.312 0.250	14.00	4	5/8–11	0.94

(Continued)

Not for Resale

Copyright National Electrical Manufacturers Association
Provided by IHS under license with NEMA
No reproduction or networking permitted without license from IHS
Not for Resale

9009279 0003844 06T

TABLE 1 OF MG 1-18.614

(Continued)

Frame Designations	EL	EM	EN			EP Min	EQ*	ER Min	Keyseat			ET*
			Tap Size	Tap Drill Depth Max	Bolt Penetration Allowance				R	ES Min	S	
143JM and 145JM	1.156 1.154	1.0000 0.9995	⅜–16	1.12	0.75	1.156	0.640 0.610	4.25	0.771–0.756	1.65	0.190–0.188	2.890 2.860
182JM and 184JM	1.250 1.248	1.0000 0.9995	⅜–16	1.12	0.75	1.250	0.640 0.610	4.25	0.771–0.756	1.65	0.190–0.188	2.890 2.860
213JM and 215JM	1.250 1.248	1.0000 0.9995	⅜–16	1.12	0.75	1.750	0.640 0.610	4.25	0.771–0.756	1.65	0.190–0.188	2.890 2.860
254JM and 256JM	1.750 1.748	1.3750 1.3745	½–13	1.50	1.00	1.750	0.640 0.610	5.25	1.112–1.097	2.53	0.252–0.250	3.015 2.985
284JM and 286JM	1.750 1.748	1.3750 1.3745	½–13	1.50	1.00	2.125	0.645 0.605	5.25	1.112–1.097	2.53	0.252–0.250	3.020 2.980
324JM and 326JM	1.750 1.748	1.3750 1.3745	½–13	1.50	1.00	2.125	0.645 0.605	5.25	1.112–1.097	2.53	0.252–0.250	3.020 2.980

All dimensions in inches.

* See Note I of Fig. 1.
† See Note II of Fig. 1.

NOTE 1—For the meaning of the letter dimensions, see Fig. 1 and MG 1-4.01.

TOLERANCES (see MG 1-4.06)—
Face Runout—
143JM to 256JM frames, incl., 0.004-inch indicator reading.
284JM to 326JM frames, incl., 0.006-inch indicator reading.
Permissible Eccentricity of Mounting Rabbet—
143JM to 256JM frames, incl., 0.004-inch indicator reading.
284JM to 326JM frames, incl., 0.006-inch indicator reading.
Permissible Shaft Runout—
143JM to 256JM frames, incl., 0.002-inch indicator reading.
284JM to 326JM frames, incl., 0.003-inch indicator reading.

9009279 0003845 TT6

Copyright National Electrical Manufacturers Association
Provided by IHS under license with NEMA
No reproduction or networking permitted without license from IHS
Not for Resale

TABLE 2 OF MG 1-18.614
DIMENSIONS FOR TYPE JP ALTERNATING-CURRENT FACE-MOUNTED CLOSE-COUPLED PUMP MOTORS

Frame Designations	U	AH*	AJ†	AK	BB	BD Max	BF		
							Number	Tap Size	Bolt Penetration Allowance
143JP and 145JP	0.8745 0.8740	7.343 7.281	5.875	4.500 4.497	0.156 0.125	6.62	4	3/8–16	0.56
182JP and 184JP	0.8745 0.8740	7.343 7.281	5.875	4.500 4.497	0.156 0.125	6.62	4	3/8–16	0.56
213JP and 215JP	1.2495 1.2490	8.156 8.094	7.250	8.500 8.497	0.312 0.250	9.00	4	1/2–13	0.75
254JP and 256JP	1.2495 1.2490	8.156 8.094	7.250	8.500 8.497	0.312 0.250	10.00	4	1/2–13	0.75
284JP and 286JP	1.2495 1.2490	8.156 8.094	11.000	12.500 12.495	0.312 0.250	14.00	4	5/8–11	0.94
324JP and 326JP	1.2495 1.2490	8.156 8.094	11.000	12.500 12.495	0.312 0.250	14.00	4	5/8–11	0.94
364JP and 365JP	1.6245 1.6240	8.156 8.094	11.000	12.500 12.495	0.312 0.250	14.00	4	5/8–11	0.94

(*Continued*)

Copyright National Electrical Manufacturers Association
Provided by IHS under license with NEMA
No reproduction or networking permitted without license from IHS
Not for Resale

9009279 0003846 932

TABLE 2 OF MG 1-18.614

(Continued)

Frame Designations	EL	EM	EN			EP Min	EQ*	ER Min	Keyseat			ET*
			Tap Size	Tap Drill Depth Max	Bolt Penetration Allowance				R	ES Min	S	
143JP and 145JP	1.156 1.154	1.0000 0.9995	⅜–16	1.12	0.75	1.156	1.578 1.548	7.312	0.771–0.756	1.65	0.190–0.188	5.952 5.922
182JP and 184JP	1.250 1.248	1.0000 0.9995	⅜–16	1.12	0.75	1.250	1.578 1.548	7.312	0.771–0.756	1.65	0.190–0.188	5.952 5.922
213JP and 215JP	1.750 1.748	1.3750 1.3745	½–13	1.50	1.00	1.750	2.390 2.360	8.125	1.112–1.097	2.53	0.252–0.250	5.890 5.860
254JP and 256JP	1.750 1.748	1.3750 1.3745	½–13	1.50	1.00	1.750	2.390 2.360	8.125	1.112–1.097	2.53	0.252–0.250	5.890 5.860
284JP and 286JP	1.750 1.748	1.3750 1.3745	½–13	1.50	1.00	2.125	2.390 2.360	8.125	1.112–1.097	2.53	0.252–0.250	5.895 5.855
324JP and 326JP	1.750 1.748	1.3750 1.3745	½–13	1.50	1.00	2.125	2.395 2.355	8.125	1.112–1.097	2.53	0.252–0.250	5.895 5.855
364JP and 365JP	2.125 2.123	1.7500 1.7495	½–13	1.50	1.00	2.500	2.395 2.355	8.125	1.416–1.401	2.53	0.377–0.375	5.895 5.855

All dimensions in inches.

* See Note I of Fig. 1.
† See Note II of Fig. 1.
NOTE I—For the meaning of the letter dimensions, see Fig. 1 and MG 1-4.01.

TOLERANCES— (see MG 1-4.06)—
Face Runout—
143JP to 256JP frames, incl., 0.004-inch indicator reading.
284JP to 365JP frames, incl., 0.006-inch indicator reading.
Permissible Eccentricity of Mounting Rabbet—
143JP to 256JP frames, incl., 0.004-inch indicator reading.
284JP to 365JP frames, incl., 0.006-inch indicator reading.
Permissible Shaft Runout—
143JP to 256JP frames, incl., 0.002-inch indicator reading.
284JP to 365JP frames, incl., 0.003-inch indicator reading.

Copyright National Electrical Manufacturers Association
Provided by IHS under license with NEMA
No reproduction or networking permitted without license from IHS
Not for Resale

9009279 0003847 879

MG 1-18.620 Dimensions for Type LP and LPH Vertical Solid-shaft Single-phase and Polyphase Direct-connected Squirrel-cage Induction Motors (Having the Thrust Bearing in the Motor) for Chemical Process In-line Pump Applications▲

Frame Designations	AJ*	AK	BB Min	BD Max	BF Clearance Hole Number	BF Clearance Hole Size	U	V Min	AH†	EP Min	EU	Keyseat R	Keyseat ES Min	Keyseat S
143LP and 145LP	9.125	8.253 8.250	0.19	10.00	4	0.44	1.1250 1.1245	2.75	2.781 2.719	1.156	0.875 0.870	0.986–0.971	1.28	0.252–0.250
182LP and 184LP	9.125	8.253 8.250	0.19	10.00	4	0.44	1.1250 1.1245	2.75	2.781 2.719	1.156	0.875 0.870	0.986–0.971	1.28	0.252–0.250
213LP and 215LP	9.125	8.253 8.250	0.19	10.00	4	0.44	1.6250 1.6245	2.75	2.781 2.719	1.750	1.250 1.245	1.416–1.401	1.28	0.377–0.375
254LP and 256LP	9.125	8.253 8.250	0.19	10.00	4	0.44	1.6250 1.6245	2.75	2.781 2.719	1.750	1.250 1.245	1.416–1.401	1.28	0.377–0.375
284LP and 286LP‡	9.125	8.253 8.250	0.19	10.00	4	0.44	2.1250 2.1240	4	4.531 4.469	2.250	1.750 1.745	1.845–1.830	3.03	0.502–0.500
324LP and 326LP	14.750	13.505 13.500	0.25	16.50	4	0.69	2.1250 2.1240	4	4.531 4.469	2.250	1.750 1.745	1.845–1.830	3.03	0.502–0.500
364LP and 365LP	14.750	13.505 13.500	0.25	16.50	4	0.69	2.1250 2.1240	4	4.531 4.469	2.250	1.750 1.745	1.845–1.830	3.03	0.502–0.500
404LP and 405LP	14.750	13.505 13.500	0.25	16.50	4	0.69	2.1250 2.1240	4	4.531 4.469	2.250	1.750 1.745	1.845–1.830	3.03	0.502–0.500
444LP and 445LP	14.750	13.505 13.500	0.25	16.50	4	0.69	2.1250 2.1240	4	4.531 4.469	2.250	1.750 1.745	1.845–1.830	3.03	0.502–0.500
‡ These frames have the following alternate dimensions:														
284LPH and 286LPH	14.750	13.505 13.500	0.25	16.50	4	0.69	2.1250 2.1240	4	4.531 4.469	2.250	1.750 1.745	1.845–1.830	3.03	0.502–0.500

All dimensions in inches.

(*Continued*)

▲ Revised.

9009279 0003848 705

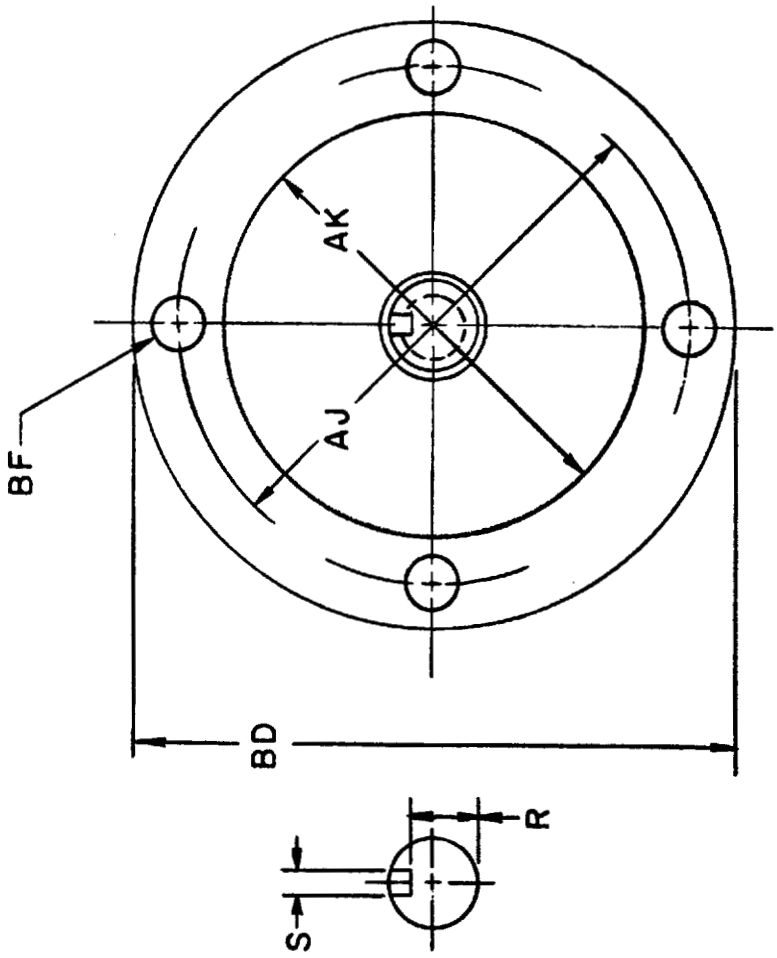

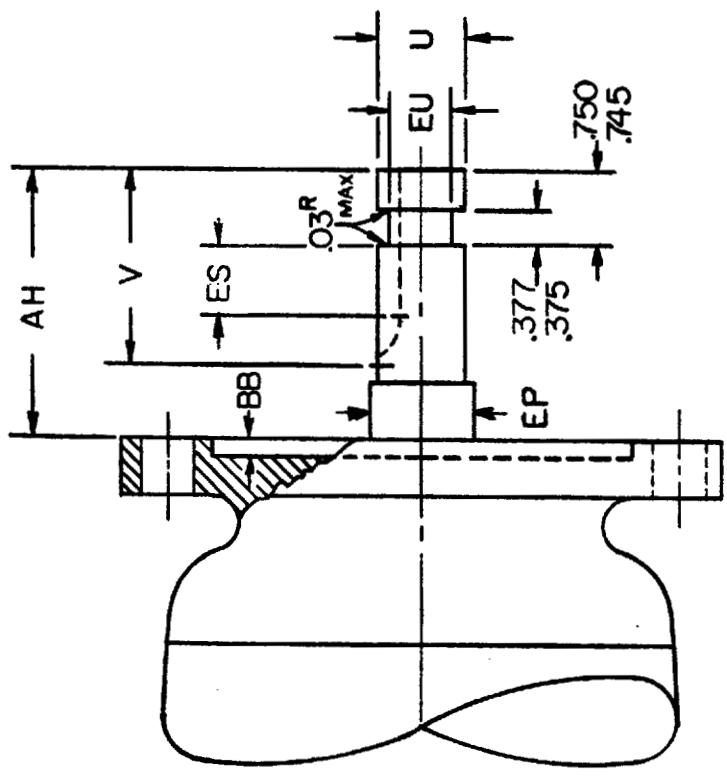

these frames shall be in accordance with NEMA Publication No. MG 13, except for the inclusion of the suffix letters LP and LPH in place of the suffix letters T and TS.

NOTE IV—Motor balance not to exceed 0.001 inch for all operating speeds. See MG 1-12.06 for method of measurement.

TOLERANCES—(see MG 1-4.06)—
Face runout and permissible eccentricity of mounting rabbet—0.004-inch indicator reading.
Permissible shaft runout—0.001-inch indicator reading.

Suggested Standard for Future Design 1-17-1974, revised 5-12-1975, NEMA Standard 3-14-1979.

† Dimension measured with motor in vertical position shaft down.

* AJ centerline of bolt holes within 0.025 inch for all frames of true location. True location is defined as angular and diametrical location with reference to the centerline of AK.

NOTE I—Total axial end play of shaft is 0.002 inch maximum under 50 pounds reversing static load with motor in a horizontal position at ambient temperature.

NOTE II—Radial displacement at end of motor shaft is 0.001 inch maximum at ambient temperature with zero axial load and a 25-pound force applied at the pump end of the motor shaft.

NOTE III—The assignment of horsepower and speed ratings to

Copyright National Electrical Manufacturers Association
Provided by IHS under license with NEMA
No reproduction or networking permitted without license from IHS

Not for Resale

Copyright National Electrical Manufacturers Association
Provided by IHS under license with NEMA
No reproduction or networking permitted without license from IHS
Not for Resale

9009279 0003849 641

MG 1-18.625 Dimensions for Type HP and HPH Vertical Solid-shaft Single-phase and Polyphase Direct-connected Squirrel-cage Induction Motors for Process and In-line Pump Applications▲

(This standard was developed jointly with the Hydraulic Institute)

Frame Designations	AJ*	AK	BB Min	BD Max	BF Clearance Hole Number	BF Clearance Hole Size	U	V Min	AH†	EP Min	EU	Keyseat R	Keyseat ES Min	Keyseat S
143HP and 145HP	9.125	8.253 8.250	0.19	10.00	4	0.44	0.8750 0.8745	2.75	2.781 2.719	1.156	0.688 0.683	0.771–0.756	1.28	0.190–0.188
182HP and 184HP	9.125	8.253 8.250	0.19	10.00	4	0.44	1.1250 1.1245	2.75	2.781 2.719	1.156	0.875 0.870	0.986–0.971	1.28	0.252–0.250
213HP and 215HP	9.125	8.253 8.250	0.19	10.00	4	0.44	1.1250 1.1245	2.75	2.781 2.719	1.375	0.875 0.870	0.986–0.971	1.28	0.252–0.250
254HP and 256HP	9.125	8.253 8.250	0.19	10.00	4	0.44	1.1250 1.1245	2.75	2.781 2.719	1.750	0.875 0.870	0.986–0.971	1.28	0.252–0.250
284HP and 286HP‡	9.125	8.253 8.250	0.19	10.00	4	0.44	1.1250 1.1245	2.75	2.781 2.719	1.750	0.875 0.870	0.986–0.971	1.28	0.252–0.250
324HP and 326HP	14.750	13.505 13.500	0.25	16.50	4	0.69	1.6250 1.6245	4.50	4.531 4.469	2.125	1.250 1.245	1.416–1.401	3.03	0.377–0.375
364HP and 365HP	14.750	13.505 13.500	0.25	16.50	4	0.69	1.6250 1.6245	4.50	4.531 4.469	2.250	1.250 1.245	1.416–1.401	3.03	0.377–0.375
404HP and 405HP‡	14.750	13.505 13.500	0.25	16.50	4	0.69	1.6250 1.6245	4.50	4.562 4.438	2.250	1.250 1.245	1.416–1.401	3.03	0.377–0.375
444HP and 445HP	14.750	13.505 13.500	0.25	16.50	4	0.69	2.1250 2.1240	4.50	4.562 4.438	2.250	1.750 1.745	1.845–1.830	3.03	0.502–0.500
‡ These frames have the following alternate dimensions:														
284HPH and 286HPH	14.750	13.505 13.500	0.25	16.50	4	0.69	1.6250 1.6245	4.50	4.531 4.469	1.750	1.250 1.245	1.416–1.401	3.03	0.377–0.375
404HPH and 405HPH	14.750	13.505 13.500	0.25	16.50	4	0.69	2.1250 2.1240	4.50	4.562 4.438	2.250	1.750 1.745	1.845–1.830	3.03	0.502–0.500

All dimensions in inches.

(Continued)

▲ Revised.

9009279 0003850 363

Suggested Standard for Future Design 7-15-1970, NEMA Standard 3-14-1979.

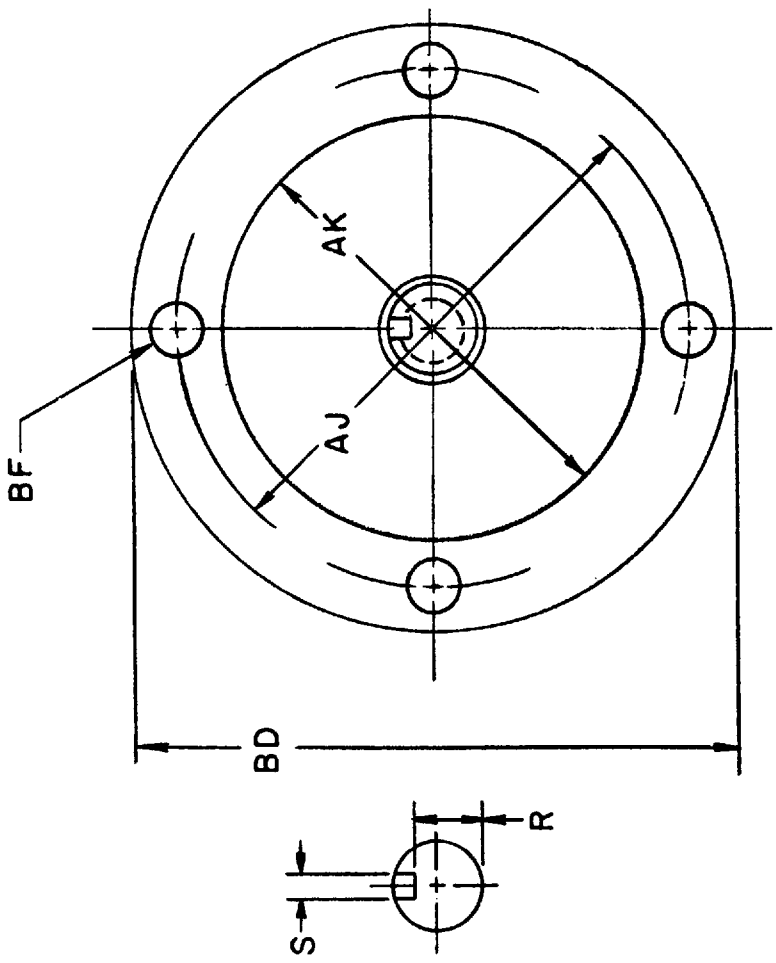

TOLERANCES— (see MG 1-4.06)—
Face Runout—
For AK dimension 8.250 inch, 0.004-inch indicator reading.
For AK dimension 13.500 inch, 0.006-inch indicator reading.
Permissible Eccentricity of Mounting Rabbet
For AK dimension 8.250 inch, 0.004-inch indicator reading.
For AK dimension 13.500 inch, 0.006-inch indicator reading.
Permissible Shaft Runout—
For AK dimension 8.250 inch, 0.002-inch indicator reading.
For AK dimension 13.500 inch, 0.002-inch indicator reading.

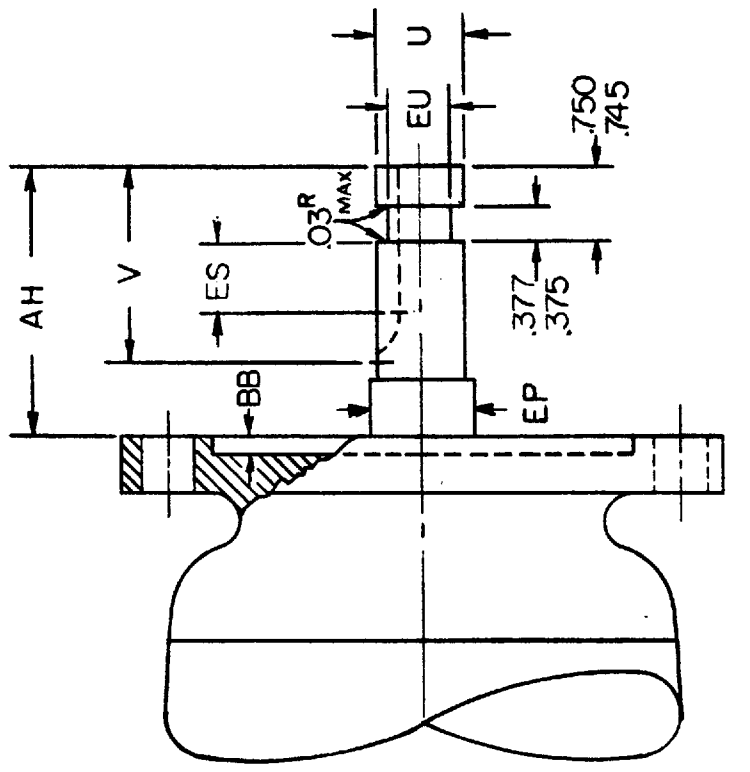

† Dimension measured with motor in vertical position shaft down.
* AJ centerline of bolt holes within 0.025 inch for all frames of true location. True location is defined as angular and diametrical location with reference to the centerline of AK.
NOTE I—Where continuous thrust in either direction may occur, the shaft end play shall not exceed the bearing internal axial movement. The bearing and mounting fits shall be as recommended by the bearing manufacturer for pump applications. Note I applies to open and totally enclosed motors only; for explosion proof motors, contact individual motor manufacturers.
NOTE II—The assignment of horsepower and speed ratings to these frames shall be in accordance with NEMA Publication No. MG 13, except for the inclusion of the suffix letters HP and HPH in place of the suffix letters T and TS.

Copyright National Electrical Manufacturers Association
Provided by IHS under license with NEMA
No reproduction or networking permitted without license from IHS

Not for Resale

9009279 0003851 2TT

DC Permanent-magnet Tachometer Generators for Control Systems

(A direct-current permanent-magnet control tachometer generator is a direct-current generator designed to have an output voltage proportional to rotor speed for use in open-loop or closed-loop control systems.)

MG 1-18.626 Classification According to Electrical Type

Direct current permanent-magnet excited.

Suggested Standard for Future Design 7-12-1961, reaffirmed 8-19-1964, revised 7-7-1965; reaffirmed 11-21-1968; 7-15-1970.

MG 1-18.627 Classification According to Output Voltage Rating

1. High-voltage type.
2. Low-voltage type.

Suggested Standard for Future Design 7-12-1961, reaffirmed 8-19-1964; 7-13-1967; 7-15-1970.

RATINGS

MG 1-18.628 Output Voltage Ratings

The output voltage ratings of high-voltage-type tachometer generators shall be 50, 100 and 200 volts per 1000 rpm.

The output voltage ratings of low-voltage-type tachometer generators shall be 2, 4, 8, 16 and 32 volts per 1000 rpm.

Suggested Standard for Future Design 7-12-1961, reaffirmed 8-19-1964; 7-13-1967; 7-15-1970.

MG 1-18.629 Current Rating

The current rating of high-voltage-type tachometer generators shall be 25 milliamperes at the highest rated speed.

NEMA Standard 11-17-1966.

Low-voltage-type tachometer generators do not have a current rating. In general, the load impedance should be at least 1000 times the armature resistance.

Authorized Engineering Information 11-17-1966.

MG 1-18.630 Speed Ratings

The speed range of high-voltage-type tachometer generators shall be 100–5000, 100–3600, 100–2500, 100–1800 and 100–1250 rpm.

The speed range of low-voltage-type tachometer generators shall be 100–10000, 100–5000 and 100–3600 rpm.

Suggested Standard for Future Design 7-12-1961, reaffirmed 8-19-1964; 7-13-1967; 7-15-1970.

Copyright National Electrical Manufacturers Association
Provided by IHS under license with NEMA
No reproduction or networking permitted without license from IHS
Not for Resale

9009279 0003852 136

TESTS AND PERFORMANCE

MG 1-18.631 Test Methods

Tests to determine performance characteristics shall be made in accordance with IEEE Std 251, *Test Procedure for Direct-current Tachometer Generators.*

Suggested Standard for Future Design 7-7-1965, reaffirmed 11-21-1968; 7-15-1970.

MG 1-18.632 Temperature Rise

Control tachometer generators shall have Class A insulation system and shall be designed for use in a maximum ambient of 65 °C. The temperature rise above the temperature of the cooling medium for each of the various parts of the generator, when tested in accordance with the rating, shall not exceed the following values:

	High-voltage Type	Low-voltage Type
COIL WINDINGS, DEGREES C		
Armature—resistance.....	40	50
COMMUTATORS—thermometer..	40	40

MISCELLANEOUS PARTS (SUCH AS BRUSHHOLDERS, BRUSHES, AND POLE TIPS) MAY ATTAIN SUCH TEMPERATURES AS WILL NOT INJURE THE MACHINE IN ANY RESPECT.

NOTE—See MG 1-1.65 for description of classes of insulation.

Suggested Standard for Future Design 7-12-1961, reaffirmed 8-19-1964, revised 7-7-1965; reaffirmed 11-21-1968; 7-15-1970.

Abnormal deterioration of insulation may be expected if the ambient temperature stated above is exceeded in regular operation.

Authorized Engineering Information 7-12-1961.

MG 1-18.633 Variation from Rated Output Voltage

A. HIGH-VOLTAGE TYPE

The no-load voltage of individual generators shall be within plus or minus 5 percent of the rated output voltage.

B. LOW-VOLTAGE TYPE

The voltage with specified load impedance shall be within plus or minus 5 percent of the rated output voltage.

Suggested Standard for Future Design 7-12-1961, reaffirmed 8-19-1964; 7-13-1967; 7-15-1970.

MG 1-18.634 High-potential Tests

A. See MG 1-3.01.

B. The high-potential test shall be made by applying 1000 volts plus twice the rated voltage of the tachometer generator. Rated voltage shall be determined by using the tachometer generator rated voltage at maximum rated speed.

Suggested Standard for Future Design 7-12-1961, reaffirmed 8-19-1964; 7-13-1967; 7-15-1970; 1-25-1972.

MG 1-18.635 Overspeed

Control tachometer generators shall be so constructed that, in an emergency, they will withstand without mechanical injury a speed of 125 percent of the maximum rated speed.

Suggested Standard for Future Design 7-12-1961, reaffirmed 8-19-1964; 7-13-1967.

This overspeed may damage the commutator and brush surfaces with a resulting temporary change in performance characteristics.

Authorized Engineering Information 7-12-1961.

MG 1-18.636 Performance Characteristics

The following typical performance data shall be available for each control tachometer generator. Data will normally be supplied in tabulated form.

A. HIGH-VOLTAGE TYPE

1. Peak-to-peak or root mean square ripple voltage data, as specified, expressed as a percentage of output voltage over the rated speed range and at one or more load impedances.
2. Linearity data as a percentage of output voltage over the rated speed range at no-load and at one or more load impedances.
3. Reversing error data as a percentage of output voltage over the rated speed range at no-load.
4. Short-time voltage stability data at constant speed and load impedance in percent of average voltage.
5. Long-time voltage stability data at constant speed and load impedance in percent voltage change per hour.
6. Rotor resistance between bars of opposite polarity corrected to 25 °C.
7. Standstill (break-away) and maximum running torque—ounce-feet or ounce-inches.
8. Wk^2 of rotor—lb-in.^{2}
9. Total weight of generator.

B. LOW-VOLTAGE TYPE

1. Peak-to-peak or root mean square ripple voltage data, as specified, expressed as a percentage of output voltage over the rated speed range and at one or more load impedances.
2. Linearity data as a percentage of output voltage over the rated speed range at no-load and at one or more load impedances.
3. Reversing error data as a percentage of output voltage over the rated speed at no load.
4. Rotor resistance between bars of opposite polarity corrected to 25 °C.
5. Wk^2 of rotor—oz-in.^{2}

Suggested Standard for Future Design 7-12-1961, reaffirmed 8-19-1964, revised 7-7-1965; 11-17-1966, reaffirmed 7-15-1970, revised 1-25-1972.

Copyright National Electrical Manufacturers Association
Provided by IHS under license with NEMA
No reproduction or networking permitted without license from IHS
Not for Resale

9009279 0003853 072

MANUFACTURING

MG 1-18.637 Nameplate Marking

The following minimum amount of information shall be given on all nameplates. For abbreviations, see MG 1-1.80.

A. HIGH-VOLTAGE TYPE

1. Manufacturer's name or identification symbol.
2. Manufacturer's type designation.
3. Manufacturer's serial number or date code.
4. Electrical type.*
5. Voltage rating—volts per 1000 rpm.
6. Speed range.*
7. Maximum ambient temperature.*
8. Calibration voltage—no-load test voltage and speed.*

B. LOW-VOLTAGE TYPE

1. Manufacturer's name or identification symbol.
2. Manufacturer's type designation.
3. Voltage rating—volts per 1000 rpm.

* On small units where nameplate size is such that it is impractical to mark all data, the items marked with an asterisk may be on a separate card or tag.

Suggested Standard for Future Design 7-12-1961, reaffirmed 8-19-1964, revised 7-7-1965, reaffirmed 11-21-1968; 7-15-1970.

MG 1-18.638 Direction of Rotation

The standard direction of rotation shall be clockwise facing the end opposite the drive.

Suggested Standard for Future Design 7-12-1961, reaffirmed 8-19-1964; 7-13-1967; 7-15-1970, revised 1-25-1972.

Tachometer generators may be operated on a reversing cycle provided that the period of operation on any one direction of rotation is no longer than 1 hour and a reasonable balance of time on each direction is maintained. Unequal operating time in both directions may result in uneven brush wear which can cause different output voltages, ripple content and reversing error data. For such an application condition, the tachometer generator manufacturer should be consulted.

Authorized Engineering Information 1-25-1972.

MG 1-18.639 General Mechanical Features

Control tachometer generators shall be constructed with the following mechanical features:

A. HIGH-VOLTAGE TYPE

1. Totally enclosed.
2. Ball bearing.
3. Generators built in frame 42 and larger shall have dimensions according to MG 1-11.60 or MG 1-11.35.
4. Generators built in frame 42 and larger shall have provision for ½-inch conduit connection.

B. LOW-VOLTAGE TYPE

1. Open or totally enclosed.
2. Ball bearing.

Suggested Standard for Future Design 7-12-1961, reaffirmed 8-19-1964; 7-13-1967; 7-15-1970.

MG 1-18.640 Terminal Markings

For clockwise rotation facing the end opposite the drive, the positive terminal shall be marked "A-2" or colored red, and the negative terminal shall be marked "A-1" or colored black.

Suggested Standard for Future Design 11-11-1965, NEMA Standard 7-16-1969.

Copyright National Electrical Manufacturers Association
Provided by IHS under license with NEMA
No reproduction or networking permitted without license from IHS
Not for Resale

9009279 0003854 T09

Torque Motors

MG 1-18.651 Definition

A torque motor is a motor rated for operation at standstill.

NOTE—For nameplate markings, see MG 1-18.652 and MG 1-18.653.

NEMA Standard 11-11-1965.

MG 1-18.652 Nameplate Markings—AC Torque Motors

The following minimum amount of information shall be given on all nameplates:

1. Manufacturer's type and frame designation.
2. Locked rotor torque.
3. Time rating.
4. Maximum ambient temperature for which motor is designed.
5. Insulation system designation. (If stator and rotor use different classes of insulation systems, both insulation system designations shall be given on the nameplate, that for the stator being given first.)
6. Synchronous rpm.
7. Frequency.
8. Number of phases.
9. Rated load amperes (locked rotor).
10. Voltage.
11. The words "thermally protected" for motors equipped with thermal protectors.

NOTE—Thermal protection can be indicated on a separate plate.

NEMA Standard 11-11-1965.

MG 1-18.653 Nameplate Markings—DC Torque Motors

The following minimum amount of information shall be given on all nameplates:

1. Manufacturer's type and frame designation.
2. Locked rotor torque.
3. Time rating.
4. Temperature rise.
5. Voltage.
6. Rated load amperes (locked rotor).
7. Type of winding.
8. The words "thermally protected" for motors equipped with thermal protectors.

NOTE—Thermal protection can be indicated on a separate plate.

NEMA Standard 11-11-1965.

Copyright National Electrical Manufacturers Association
Provided by IHS under license with NEMA
No reproduction or networking permitted without license from IHS
Not for Resale

9009279 0003855 945

Fractional-horsepower Motors for Carbonator Pumps

MG 1-18.726 Classification According to Electrical Type▲

1. Single phase—Split phase.

Suggested Standard for Future Design 11-21-1968, NEMA Standard 3-19-1980.

RATINGS

MG 1-18.727 Voltage Ratings▲

The voltage rating of single-phase 60-hertz motors shall be 115 or 230 volts.

Suggested Standard for Future Design 11-21-1968, NEMA Standard 3-19-1980.

MG 1-18.728 Frequencies▲

Frequencies shall be 60 and 50 hertz.

Suggested Standard for Future Design 11-21-1968, NEMA Standard 3-19-1980.

MG 1-18.729 Horsepower and Speed Ratings▲

A. Horsepower ratings shall be 1/6, 1/4 and 1/3 horsepower.

B. Speed ratings shall be:

1. 60 hertz—1800 rpm synchronous speed, 1725 rpm approximate full-load speed.
2. 50 hertz—1500 rpm synchronous speed, 1425 rpm approximate full-load speed.

Suggested Standard for Future Design 11-21-1968, NEMA Standard 3-19-1980.

TESTS AND PERFORMANCE

MG 1-18.730 Temperature Rise▲

Carbonator pump motors shall have Class A or B insulation systems. The temperature rise above the temperature of the cooling medium shall be in accordance with MG 1-12.41.

Suggested Standard for Future Design 11-21-1968, NEMA Standard 3-19-1980.

MG 1-18.731 Basis of Horsepower Rating

For single-phase induction motors, see MG 1-10.33.

MG 1-18.732 High-potential Tests

See MG 1-3.01 and MG 1-12.03.

MG 1-18.733 Maximum Locked-rotor Current—Single Phase

See the values for Design 0 motors in MG 1-12.32.

MG 1-18.734 Variation from Rated Voltage

See MG 1-12.43.

MG 1-18.735 Variation from Rated Frequency

See MG 1-12.44.

MG 1-18.736 Combined Variation of Voltage and Frequency

See MG 1-12.45.

MG 1-18.737 Direction of Rotation▲

Motors for carbonator pumps shall normally be arranged for counterclockwise rotation when facing the end opposite the drive but shall be capable of operation in either direction.

Suggested Standard for Future Design 11-21-1968, NEMA Standard 3-19-1980.

▲ Revised.

Copyright National Electrical Manufacturers Association
Provided by IHS under license with NEMA
No reproduction or networking permitted without license from IHS
Not for Resale

9009279 0003856 881

MANUFACTURING

MG 1-18.738 General Mechanical Features▲

Carbonator-pump motors shall be constructed with the following mechanical features (see MG 1-18.739):

1. Open or drip proof.
2. Sleeve bearing.
3. Resilient mounting.
4. Automatic reset thermal overload protector.
5. Mounting dimensions and shaft extension in accordance with MG 1-18.739.

Suggested Standard for Future Design 11-21-1968, NEMA Standard 3-19-1980.

▲ Revised.

Copyright National Electrical Manufacturers Association
Provided by IHS under license with NEMA
No reproduction or networking permitted without license from IHS

Not for Resale

9009279 0003857 718

MG 1-18.739 Dimensions for Carbonator Pump Motors ▲

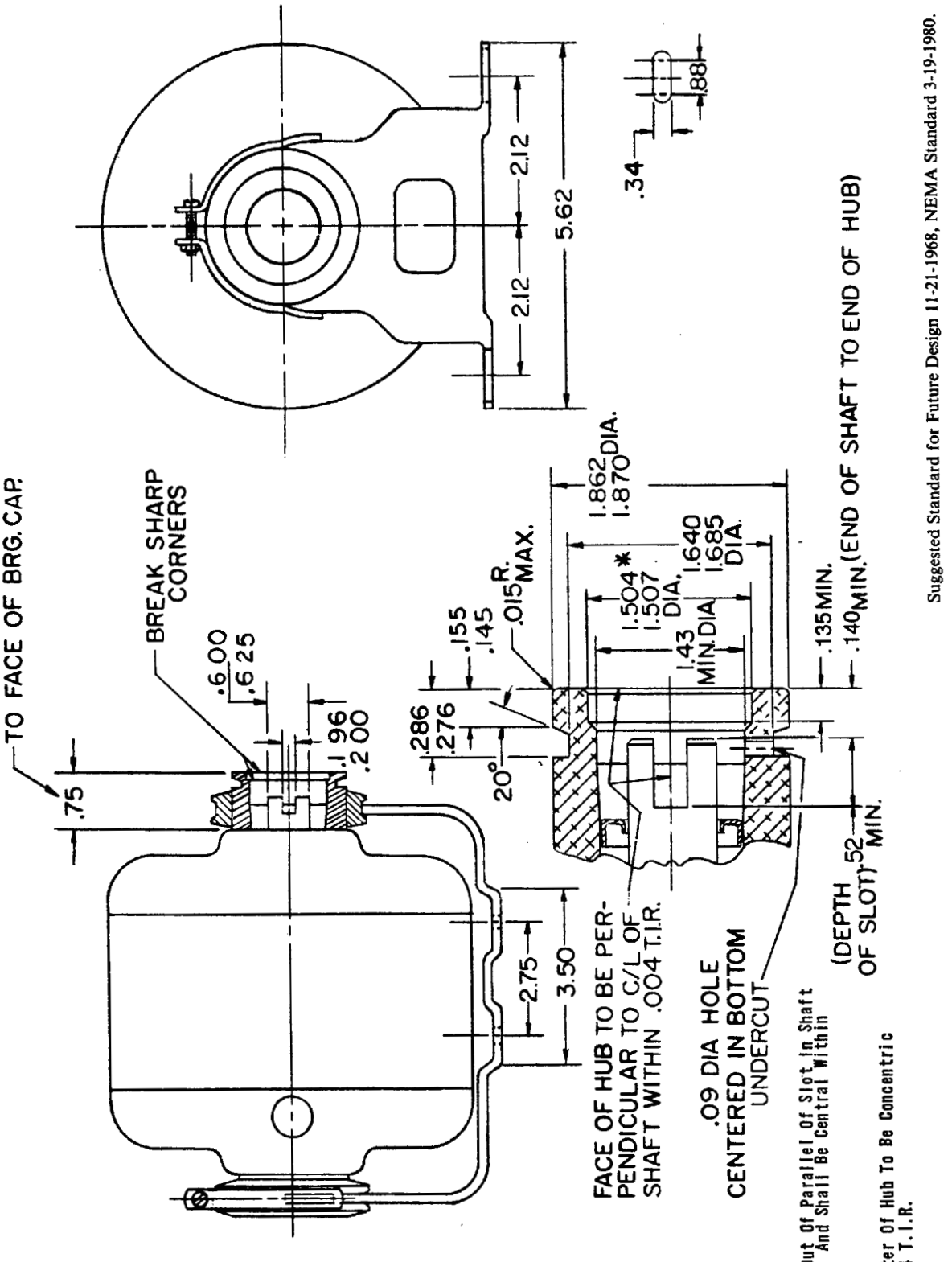

Allowable Out Of Parallel Of Slot In Shaft .004 T.I.R. And Shall Be Central Within .004 T.I.R.

* This Diameter Of Hub To Be Concentric Within .004 T.I.R.

▲ Revised.

Suggested Standard for Future Design 11-21-1968, NEMA Standard 3-19-1980.

Copyright National Electrical Manufacturers Association
Provided by IHS under license with NEMA
No reproduction or networking permitted without license from IHS

Not for Resale

9009279 0003858 654

SECTION III

LARGE APPARATUS

Part 20. Induction Motors

The standards in this Part 20 of Section III cover induction motors built in frames larger than those required for induction motors having the following continuous open-type ratings:

Synchronous Speed	Motors, Squirrel-cage and Wound Rotor, Hp
3600	500
1800	500
1200	350
900	250
720	200
600	150
514	125

Copyright National Electrical Manufacturers Association
Provided by IHS under license with NEMA
No reproduction or networking permitted without license from IHS
Not for Resale

9009279 0003859 590

Part 20

LARGE APPARATUS—INDUCTION MOTORS

RATINGS

MG 1-20.05 Basis of Rating

Induction motors covered by this Part 20 shall be rated on a continuous-duty basis unless otherwise specified. The output rating shall be expressed in horsepower available at the shaft at a specified speed, frequency and voltage.

NEMA Standard 5-20-1974.

MG 1-20.10 Horsepower and Speed Ratings

Horsepower ratings and synchronous speed ratings shall be as follows:

Hp Ratings					
100	600	2500	9000	19000	45000
125	700	3000	10000	20000	50000
150	800	3500	11000	22500	55000
200	900	4000	12000	25000	60000
250	1000	4500	13000	27500	65000
300	1250	5000	14000	30000	70000
350	1500	5500	15000	32500	75000
400	1750	6000	16000	35000	80000
450	2000	7000	17000	37500	90000
500	2250	8000	18000	40000	100000

Synchronous Speed Ratings, Rpm at 60 hertz*			
3600	720	400	277
1800	600	360	257
1200	514	327	240
900	450	300	225

* At 50 hertz, the speeds are 5/6 of the 60-hertz speeds.

NOTE—It is not practical to build motors of all horsepower ratings at all speeds.

NEMA Standard 11-15-1956, revised 7-13-1967.

MG 1-20.10a Horsepower Ratings of Multispeed Motors

The horsepower ratings of multispeed motors shall be selected as follows:

A. CONSTANT HORSEPOWER

The horsepower rating for each rated speed shall be selected from MG 1-20.10.

B. CONSTANT TORQUE

The horsepower rating for the highest rated speed shall be selected from MG 1-20.10. The horsepower rating for each lower speed shall be determined by multiplying the horsepower rating at the highest speed by the ratio of the lower synchronous speed to the highest synchronous speed.

C. VARIABLE TORQUE

The horsepower rating for the highest rated speed shall be selected from MG 1-20.10. The horsepower rating for each lower speed shall be determined by multiplying the horsepower rating at the highest speed by the square of the ratio of the lower synchronous speed to the highest synchronous speed.

NEMA Standard 7-17-1974.

MG 1-20.11 Voltage Ratings ▲

Voltages shall be 460, 575, 2300, 4000, 4600, 6600 and 13200 volts. These voltage ratings apply to 60-hertz circuits only.

NEMA Standard 11-15-1956, revised 7-13-1967; 7-16-1969; 7-12-1978; 1-29-1981.

NOTE—It is not practical to build motors of all horsepower ratings for all these voltages. In general, based on motor design and manufacturing considerations, preferred motor voltage ratings are as follows:

Voltage Ratings	Horsepower
460 or 575	100 to 600
2300	200 to 4000
4000 or 4600	400 to 7000
6600	1000 to 12000
13200	3500 to 25000

Authorized Engineering Information 7-12-1978.

MG 1-20.12 Frequencies

The frequencies shall be 50* and 60 hertz.

* For export.

NEMA Standard 5-17-1955.

MG 1-20.13 Service Factor

When operated at rated voltage and frequency, induction motors covered by this Part 20 and having a rated temperature rise in accordance with MG 1-20.40 shall have a service factor of 1.0.

NEMA Standard 7-13-1967.

In those applications requiring an overload capacity, the use of a higher horsepower rating as given in MG 1-20.10 is recommended to avoid exceeding the temperature rises for the class of insulation used and to provide adequate torque capacity.

Authorized Engineering Information 5-24-1960.

▲ Revised.

Copyright National Electrical Manufacturers Association
Provided by IHS under license with NEMA
No reproduction or networking permitted without license from IHS
Not for Resale

9009279 0003860 202

TESTS AND PERFORMANCE

MG 1-20.40 Temperature Rise

The observable temperature rise under rated-load conditions of each of the various parts of the induction motor, above the temperature of the cooling air, shall not exceed the values given in the following table. The temperature of the cooling air* is the temperature of the external air as it enters the ventilating openings of the machine, and the temperature rises given in the table are based on a maximum temperature or 40 °C for this external air. Temperatures shall be determined in accordance with the latest revision of IEEE Std 112, *Test Procedure for Polyphase Induction Motors and Generators.*

Item	Machine Part	Method of Temperature Determination	Temperature Rise, Degrees C			
			Class of Insulation System			
			A	B	F	H
1	Insulated windings					
	a. All horsepower ratings	Resistance	60	80	105	125
	b. 1500 horsepower and less	Embedded detector†	70	90	115	140
	c. Over 1500 horsepower					
	(1) 7000 volts and less	Embedded detector†	65	85	110	135
	(2) Over 7000 volts	Embedded detector†	60	80	105	125
2	Cores, squirrel-cage windings and mechanical parts, such as collector rings and brushes, may attain such temperatures as will not injure the machine in any respect.					

* For totally-enclosed water-air-cooled machines, the temperature of the cooling air is the temperature of the air leaving the coolers. See Note I

† Embedded detectors are located within the slot of the machine and can be either resistance elements or thermocouples. For motors equipped with embedded detectors, this method shall be used to demonstrate conformity with the standard. (See MG 1-20.63.)

NOTE I—Totally-enclosed water-air-cooled machines are normally designed for the maximum cooling water temperature encountered at the location where each machine is to be installed. With a cooling water temperature not exceeding that for which the machine is designed:

a. On machines designed for cooling water temperatures up to 30 °C—the temperature of the air leaving the coolers shall not exceed 40 °C.
b. On machines designed for higher cooling water temperatures—the temperature of the air leaving the coolers may exceed 40 °C provided the temperature rises of the machine parts are then limited to values less than those given in the table by the number of degrees that the temperature of the air leaving the coolers exceeds 40 °C.

NOTE II—For motors which operate under prevailing barometric pressure and which are designed not to exceed the specified temperature rise at altitudes from 3300 feet (1000 meters) to 13000 feet (4000 meters), the temperature rises, as checked by tests at low altitudes, shall be less than those listed in the foregoing table by 1 percent of the specified temperature rise for each 330 feet (100 meters) of altitude in excess of 3300 feet (1000 meters).

Suggested Standard for Future Design 5-24-1960, revised 11-15-1962, NEMA Standard 11-11-1965, revised 8-20-1966; 7-16-1969; 11-8-1973; 9-3-1980.

NOTE III—Temperature rises in the foregoing table are based upon a reference ambient temperature of 40 °C. However it is recognized that induction motors may be required to operate in an ambient temperature higher than 40 °C. For successful operation of the motors in ambient temperatures higher than 40 °C, it is recommended that the temperature rises of the motors given in the foregoing table be reduced, as indicated below, for the ranges of ambient temperature given. (Exception—for totally-enclosed water-air-cooled machines, see NOTE I.)

Ambient Temperature, Degrees C	Values by which Temperature Rises in the Foregoing Table Should be Reduced, Degrees C
Above 40 up to and including 50	10 °C
Above 50 up to and including 60	20 °C

Authorized Engineering Information 5-24-1960; revised 11-8-1973.

MG 1-20.41 Torques

The torques*, with rated voltage and frequency applied, shall be not less than the following:

Torques*	Percent of Rated Full-load Torque
Locked rotor	60
Pull-up	60
Breakdown	175

In addition, the developed torque at any speed up to that at which breakdown torque occurs, with rated voltage and frequency applied, shall be at least 1.3 times the torque obtained from a curve that varies as the square of the speed and is equal to 100 percent of rated full-load torque at rated speed.

* See Part 1 for definitions.

NEMA Standard 11-15-1962, revised 11-12-1970; 5-12-1975.

Copyright National Electrical Manufacturers Association
Provided by IHS under license with NEMA
No reproduction or networking permitted without license from IHS
Not for Resale

Copyright National Electrical Manufacturers Association
Provided by IHS under license with NEMA
No reproduction or networking permitted without license from IHS
Not for Resale

9009279 0003861 149

MG 1-20.42 Load Wk^2 for Polyphase Squirrel-cage Induction Motors

The following table lists load Wk^2 which polyphase, squirrel-cage motors having performance characteristics in accordance with Part 20 can accelerate without injurious temperature rise under the following conditions:

1. Applied voltage and frequency within the limits set in MG 1-20.45.
2. During the accelerating period, the connected load torque shall be equal to, or less than, a torque which varies as the square of the speed and is equal to 100 percent of full-load torque at rated speed.
3. Two starts in succession (coasting to rest between starts) with the motor initially at ambient temperature or one start with the motor initially at a temperature not exceeding its rated load operating temperature.

	Speed, Rpm											
	3600	1800	1200	900	720	600	514	450	400	360	327	300
Hp	Load Wk^2 (Exclusive of Motor Wk^2), Lb-ft^2											
100	...	...	...	...	...	...	...	12670	16830	21700	27310	33690
125	...	...	...	...	...	...	...	15610	20750	26760	33680	41550
150	...	...	...	...	...	...	13410	18520	24610	31750	39960	49300
200	...	...	...	...	...	12060	17530	24220	32200	41540	52300	64500
250	...	...	...	...	9530	14830	21560	29800	39640	51200	64400	79500
300	...	...	...	6540	11270	17550	25530	35300	46960	60600	76400	94300
350	...	...	...	7530	12980	20230	29430	40710	54200	69900	88100	108800
400	...	...	4199	8500	14670	22870	33280	46050	61300	79200	99800	123200
450	...	...	4666	9460	16320	25470	37090	51300	68300	88300	111300	137400
500	...	...	5130	10400	17970	28050	40850	55600	75300	97300	122600	151500
600	443	2202	6030	12250	21190	33110	48260	66800	89100	115100	145100	179300
700	503	2514	6900	14060	24340	38080	55500	76900	102600	132600	167200	206700
800	560	2815	7760	15830	27440	42950	62700	86900	115900	149800	189000	233700
900	615	3108	8590	17560	30480	47740	69700	96700	129000	166900	210600	260300
1000	668	3393	9410	19260	33470	52500	76600	106400	141900	183700	231800	286700
1250	790	4073	11380	23390	40740	64000	93600	130000	173600	224800	283900	351300
1500	902	4712	13260	27350	47750	75100	110000	153000	204500	265000	334800	414400
1750	1004	5310	15060	31170	54500	85900	126000	175400	234600	304200	384600	476200
2000	1096	5880	16780	34860	61100	96500	141600	197300	264100	342600	433300	537000
2250	1180	6420	18440	38430	67600	106800	156900	218700	293000	380300	481200	596000
2500	1256	6930	20030	41900	73800	116800	171800	239700	321300	417300	528000	655000
3000	1387	7860	23040	48520	85800	136200	200700	280500	376500	489400	620000	769000
3500	1491	8700	25850	54800	97300	154800	228600	319900	429800	559000	709000	881000
4000	1570	9460	28460	60700	108200	172600	255400	358000	481600	627000	796000	989000
4500	1627	10120	30890	66300	118700	189800	281400	395000	532000	693000	881000	1095000
5000	1662	10720	33160	71700	128700	206400	306500	430800	581000	758000	963000	1198000
5500	1677	11240	35280	76700	138300	222300	330800	465600	628000	821000	1044000	1299000
6000	...	11690	37250	81500	147500	237800	354400	499500	675000	882000	1123000	1398000
7000	...	12400	40770	90500	164900	267100	399500	565000	764000	1001000	1275000	1590000
8000	...	12870	43790	98500	181000	294500	442100	626000	850000	1114000	1422000	1775000
9000	...	13120	46330	105700	195800	320200	482300	685000	931000	1223000	1563000	1953000
10000	...	13170	48430	112200	209400	344200	520000	741000	1009000	1327000	1699000	2125000
11000	...	...	50100	117900	220000	366700	556200	794000	1084000	1428000	1830000	2291000
12000	...	...	51400	123000	233500	387700	590200	844800	1155000	1524000	1956000	2452000
13000	...	...	52300	127500	244000	407400	622400	893100	1224000	1617000	2078000	2608000
14000	...	...	52900	131300	253600	425800	652800	934200	1289000	1707000	2195000	2758000
15000	...	...	53100	134500	262400	442900	681500	983100	1352000	1793000	2309000	2904000

The values of Wk^2 of connected load given in the foregoing table were calculated from the following formula:

$$\text{Load } Wk^2 = A\left[\frac{Hp^{.95}}{\left(\frac{Rpm}{1000}\right)^{2.4}}\right] - 0.0685\left[\frac{Hp^{1.5}}{\left(\frac{Rpm}{1000}\right)^{1.8}}\right]^*$$

Where A—24 for 300 to 1800 rpm, inclusive, motors
A—27 for 3600 rpm motors

* This formula may not be applicable to ratings not included in the above table. Consult the manufacturer for the ratings which are not shown.

Authorized Engineering Information 11-12-1953, revised 6-1-1959; 7-13-1967; 5-17-1971; 11-8-1973.

9009279 0003862 085

MG 1-20.43 Number of Starts

A. Squirrel-cage induction motors shall be capable of making the following starts, providing the Wk^2 of the load, the load torque during acceleration, the applied voltage, and the method of starting are those for which the motor was designed:

1. Two starts in succession, coasting to rest between starts, with the motor initially at ambient temperature, or
2. One start with the motor initially at a temperature not exceeding its rated load operating temperature.

NEMA Standard 6-1-1959.

B. If additional starts are required, it is recommended that none be made until all conditions affecting operation have been thoroughly investigated and the apparatus examined for evidence of excessive heating. It should be recognized that the number of starts should be kept to a minimum since the life of the motor is affected by the number of starts.

C. When requested by the purchaser, a separate starting information plate will be supplied on the motor.

Authorized Engineering Information 6-1-1959, revised 11-12-1970.

MG 1-20.44 Overspeeds ▲

Squirrel-cage and wound-rotor induction motors shall be so constructed that, in an emergency, not to exceed 1 minute, they will withstand without mechanical injury overspeeds above synchronous speed in accordance with the following:

Synchronous Speed, Rpm	Overspeed, Percent of Synchronous Speed
1801 and over	20
1800 and below	25

NEMA Standard 5-17-1955, revised 9-15-1983.

MG 1-20.45 Variations from Rated Voltage and Rated Frequency

A. RUNNING

Motors shall operate successfully under running conditions at rated load with a variation in the voltage or the frequency up to the following:

1. Plus or minus 10 percent of rated voltage, with rated frequency.
2. Plus or minus 5 percent of rated frequency, with rated voltage.
3. A combined variation in voltage and frequency of 10 percent (sum of absolute values) of the rated values, provided the frequency variation does not exceed plus or minus 5 percent of rated frequency.

Performance within these voltage and frequency variations will not necessarily be in accordance with the standards established for operation at rated voltage and frequency.

B. STARTING

Motors shall start and accelerate to running speed a load which has a torque characteristic and an inertia value not exceeding that listed in MG 1-20.42 with the voltage and frequency variations specified in par. A.

NEMA Standard 11-15-1956, revised 3-14-1963; 11-12-1970; 1-29-1981.

C. For loads with other characteristics, the starting voltage and frequency limits may be different. The limiting values of voltage and frequency under which a motor will successfully start and accelerate to running speed depend on the margin between the speed-torque curve of the motor at rated voltage and frequency and the speed-torque curve of the load under starting conditions. Since the torque developed by the motor at any speed is approximately proportional to the square of the voltage and inversely proportional to the square of the frequency, it is generally desirable to determine what voltage and frequency variations will actually occur at each installation, taking into account any voltage drop resulting from the starting current drawn by the motor. This information and the torque requirements of the driven machine define the motor-speed-torque curve, at rated voltage and frequency, which is adequate for the application.

Authorized Engineering Information 1-29-1981.

MG 1-20.45.a Operation of Induction Motors from Variable-frequency or Variable-voltage Power Supplies, or Both

Induction motors to be operated from solid-state or other types of variable-frequency or variable-voltage power supplies, or both, for adjustable-speed-drive applications may require individual consideration to provide satisfactory performance. Especially for operation below rated speed, it may be necessary to reduce the motor torque load below the rated full-load torque to avoid overheating the motor. The motor manufacturer should be consulted before selecting a motor for such applications.

Authorized Engineering Information 1-29-1981.

MG 1-20.46 Tests

A. TEST METHODS

The method of testing polyphase induction motors shall be in accordance with the following:

1. IEEE Std 112-1978, *Test Procedure for Polyphase Induction Motors and Generators.*

▲ Revised.

Copyright National Electrical Manufacturers Association
Provided by IHS under license with NEMA
No reproduction or networking permitted without license from IHS
Not for Resale

2. All tests shall be made by the manufacturer. The order of listing does not necessarily indicate the sequence in which the tests shall be made.
3. Multispeed motors shall be tested at each speed.

B. ROUTINE TESTS ON MOTORS COMPLETELY ASSEMBLED IN FACTORY

The following tests shall be made on motors completely assembled in the factory and furnished with shaft and complete set of bearings:

1. Measurement of winding resistance.
2. No-load readings of current, power, and nominal speed at rated voltage and frequency. On 50-hertz motors, these readings shall be permitted to be taken at 60 hertz.
3. Measurement of open-circuit voltage ratio on wound-rotor motors.
4. High-potential test in accordance with MG 1-20.47.

C. ROUTINE TESTS ON MOTORS NOT COMPLETELY ASSEMBLED IN FACTORY

The following factory tests shall be made on all motors not completely assembled in the factory.

1. Measurement of winding resistance.
2. High-potential test in accordance with MG 1-20.47.

NEMA Standard 11-14-1957, revised 3-19-1980.

MG 1-20.47 High-potential Tests

A. SAFETY PRECAUTIONS AND TEST PROCEDURE

See MG 1-3.01.

B. TEST VOLTAGE—PRIMARY WINDINGS

The test voltage shall be an alternating voltage whose effective value is 1000 volts plus twice the rated voltage of the machine.*

C. TEST VOLTAGE—SECONDARY WINDINGS OF WOUND ROTORS

The test voltage shall be an alternating voltage whose effective value is 1000 volts plus twice the maximum voltage which will appear between slip rings on open-circuit with rated voltage on the primary and with the rotor either at standstill or at any speed and direction of rotation (with respect to the rotating magnetic field) required by the application for which the motor was designed.

NEMA Standard 1-21-1964, revised 5-16-1966; 1-5-1977.

* A direct instead of an alternating voltage is sometimes used for high-potential tests on primary windings of machines rated 6000 volts or higher. In such cases, a test voltage equal to 1.7 times the alternating-current test voltage (effective value) as given in the preceding paragraphs is recommended. Following a direct-voltage high-potential test, the tested winding should be thoroughly grounded. The insulation rating of the winding and the test level of the voltage applied determine the period of time required to dissipate the charge and, in many cases, the ground must be maintained for several hours to dissipate the charge to avoid hazard to personnel.

Authorized Engineering Information 1-21-1964, revised 7-16-1969; 5-17-1971; 1-5-1977.

MG 1-20.48 Machine with Sealed Windings—Conformance Test ▲

An alternating-current squirrel-cage machine with sealed windings shall be capable of passing the following tests:

A. TEST FOR STATOR WHICH CAN BE SUBMERGED

After the stator winding is completed tie all leads together leaving enough length to avoid creepage to terminals and perform the following tests in the sequence indicated:

1. The sealed stator shall be tested while all insulated parts are submerged in a tank of water containing a wetting agent. The wetting agent shall be non-ionic and shall be added in a proportion sufficient to reduce the surface tension of water to a value of 31 dyn/cm (3.1 μ N/m) or less at 25°C.

2. Using 500 volts direct current, take a 10 minute dielectric absorption test following the procedure as outlined in IEEE Std 43-1974 (R 1979), *Recommended Practice for Testing Insulation Resistance of Rotating Machinery.*

3. Subject the winding to a 60-hertz high-potential test of 1.15 × the rated line-to-line rms voltage for 1 minute. Water must be at ground potential during this test.

4. Using 500 volts direct current, take a 1 minute insulation resistance measurement. The insulation resistance value shall not be less than the minimum recommended in IEEE Std 43-1974 (R 1979). (Insulation resistance in megohms $\geq$ machine rated kilovolts plus one.)

5. Remove winding from water, rinse if necessary, dry, and apply other tests as may be required.

B. TEST FOR STATOR WHICH CANNOT BE SUBMERGED

When the wound stator, because of its size or for some other reason, cannot be submerged, the tests shall be performed as follows:

1. Spray windings thoroughly for ½ hour with water containing a wetting agent. The wetting agent shall be non-ionic and shall be added in a proportion sufficient to reduce the surface tension of water to a value of 31 dyn/cm (3.1 μ N/m) or less at 25°C.

2. During the last 10 minutes, using 500 volts direct current, take a 10 minute dielectric absorption test following the procedure as outlined in IEEE Std 43-1974 (R 1979), *Recommended Practice for Testing Insulation Resistance of Rotating Machinery.*

3. Subject the winding to a 60-hertz high-potential test of 1.15 × the rated line-to-line rms voltage for 1 minute.

Copyright National Electrical Manufacturers Association
Provided by IHS under license with NEMA
No reproduction or networking permitted without license from IHS
Not for Resale

4. Using 500 volts direct current, take a 1 minute insulation resistance measurement. The insulation resistance value shall not be less than the minimum recommended in IEEE Std 43-1974 (R 1979). (Insulation resistance[A-2] in megohms ≥ machine rated kilovolts plus one.)

5. Rinse winding if necessary, dry, and apply other tests as may be required.

Suggested Standard for Future Design 7-13-1967, reaffirmed 3-17-1971; 11-16-1972, NEMA Standard 9-15-1983; 9-20-1984.

MG 1-20.49 Machine Airborne Sound

A. Sound Quality

Sound quality is determined by the distribution of effective sound intensities as a function of frequency. It plays a significant role in determining how acceptable the sound is to the human ear.

Although the overall A-weighted sound does not completely define sound acceptability, because machines with the same overall decibel sound level may have a different sound quality, it does provide a quantitative measure of loudness and hearing damage potential. It may be necessary, in some cases, to describe the sound profile in more detail. In such cases, the manufacturer should be consulted.

B. Sound Measurement

Machine sound should be measured in accordance with IEEE Std 85, *Test Procedure for Air-borne Sound Measurements on Rotating Electric Machinery.*

Motor sound tests should be taken at no load so that the motor sound can be isolated from other sound sources.

It should be recognized that decibel readings are not exact and are subject to many external influences. For further information see the NEMA Standards Publication for *Sound Level Prediction for Installed Rotating Electrical Machines,* MG 3.

C. Sound Power Levels of Polyphase Squirrel-Cage Induction Motors

The no-load overall sound power level (dBA re 10^{-12} watts) of polyphase squirrel-cage motors covered by this Part 20 generally do not exceed the values shown in Table 20-1 when measured in accordance with IEEE Std 85. The values are for motors operating at 60 hertz. Motors with additional degrees of enclosure or various types of acoustic treatment, or both, may have lower values of sound power level than the values shown.

The numerical values of mean sound pressure level (dBA re 20 μ Pa), as determined by IEEE Std 85, will typically be lower than corresponding values of sound power level in accordance with the following table.

Distance from Major Machine Surface, Meters	Typical Reductions in Decibels from Sound Power Level to Yield Mean Sound Pressure Level
1	10-13
2	15-18

Authorized Engineering Information 11-17-1967, revised 7-14-1971; 5-17-1976; 9-3-1980; 9-17-1981.

MG 1-20.50 Report of Test Form for Induction Motors

For typical test forms, see the latest revision of IEEE Std 112, *Test Procedure for Polyphase Induction Motors and Generators.*

NEMA Standard 11-14-1957, revised 9-21-1966.

Copyright National Electrical Manufacturers Association
Provided by IHS under license with NEMA
No reproduction or networking permitted without license from IHS Not for Resale

9009279 0003865 894

Table 20-1

Rated Horsepower	Synchronous Speed - RPM	Overall Sound Power Level Decibels, A-Weighted (Reference: 10^{-12} Watts)		
		Dripproof	Totally Enclosed Fan Cooled	Weather-Protected Type II
200-250	3600	...	107	...
300-450	3600	107	110	102
500-800	3600	110	114	105
900-1500	3600	112	117	107
1750-2500	3600	113	119	108
3000-5000	3600	114	120	109
200-	1800	...	103	...
250-400	1800	103	105	99
450-700	1800	106	108	102
800-1250	1800	108	111	104
1500-2250	1800	110	114	106
2500-4000	1800	111	116	107
150-	1200	96	98	...
200-350	1200	99	100	97
400-600	1200	102	103	99
700-1000	1200	105	106	101
1250-2000	1200	107	109	103
2250-3500	1200	109	111	105
125-200	900-600	95	97	92
250-400	900-600	98	100	96
450-700	900-600	101	103	99
800-1250	900-600	103	105	101
1500-2250	900-600	105	107	103

Authorized Engineering Information 1-27-1981.

Copyright National Electrical Manufacturers Association
Provided by IHS under license with NEMA
No reproduction or networking permitted without license from IHS
Not for Resale

9009279 0003866 720

MG 1-20.51 Efficiency

Efficiency and losses shall be determined in accordance with IEEE Std 112-1978, *Test Procedure for Polyphase Induction Motors and Generators.* Unless otherwise specified, the stray-load loss shall be determined by direct measurement (IEEE Std 112, par. 4.3.4.2) or indirect measurement (test loss minus conventional loss).

When using Method B, Dynamometer, efficiency shall be determined by loss segregation including the smoothing of stray-load loss as outlined in par. MG 1-12.53.a.

The following losses shall be included in determining the efficiency:

1. Stator I^2R.
2. Rotor I^2R.
3. Core loss.
4. Stray load loss.*
5. Friction and windage loss.†
6. Power required for auxiliary items such as external pumps or fans necessary for the operation of the motor shall be stated separately.

In determining I^2R losses, the resistance of each winding shall be corrected to a temperature equal to an ambient temperature of 25°C plus the observed rated load temperature rise measured by resistance. When the rated load temperature rise has not been measured, the resistance of the winding shall be corrected to the following temperature:

Class of Insulation System	Temperature, Degrees C
A	75
B	95
F	115
H	130

This reference temperature shall be used for determining I^2R losses at all loads. If the rated temperature rise is specified as that of a lower class of insulation system, the temperature for resistance correction shall be that of the lower insulation class.

* In the event stray-load loss is not measured, the value of stray-load loss at rated load shall be assumed to be 1.2 percent of the rated output for motors rated less than 2500 horsepower and 0.9 percent for motors rated at 2500 horsepower and greater. For other than rated load, it shall be assumed that the stray-load loss varies as the square of the rotor current.

† In the case of motors furnished with thrust bearings, only that portion of the thrust bearing loss produced by the motor itself shall be included in the efficiency calculation. Alternatively, a calculated value of efficiency, including bearing loss due to external thrust load, shall be specified.

In the case of motors furnished with less than a full set of bearings, friction and windage losses which are representative of the actual installation shall be determined by (1) calculation or (2) experience with shop test bearings and shall be included in the efficiency calculations.

NEMA Standard 5-12-1969, revised 1-14-1975; 3-19-1980.

▲ Revised.

MG 1-20.52 Balance of Machines

The balance for induction motors covered by this Part 20, when measured in accordance with MG 1-20.53, shall not exceed the following:

Speed, Rpm	Maximum Amplitude, Inches, Peak to Peak
3000 and above	0.001
1500–2999, incl.	0.002
1000–1499, incl.	0.0025
999 and below	0.003

NEMA Standard 7-16-1969.

MG 1-20.53 Method of Measuring the Motor Vibration ▲

The measurements shall be taken while the machine is mounted on a foundation whose natural frequency is removed by at least 25 percent from the rotational exciting frequency. Elastic mounting as specified in MG 1-12.06 is preferred.

A reliable vibration indicator shall be used.

The amplitude of vibration shall be measured on the bearing housing, in any direction, with the axis of the shaft in the normal position. With the motor operating at no load, it shall be balanced with one half a standard key in the keyseat; that is, a key of full length flush with the top of the keyseat. The machine shall be operated at rated voltage (or equivalent flux for reconnectable machines) and frequency.

NEMA Standard 7-16-1969, revised 7-12-1978; 9-15-1982.

MG 1-20.54 Reed Frequency of Vertical Motors

A. In a single degree of freedom system, the static deflection of the mass (Δ_s, inches) is related to the resonant frequency of the system (f_n, cycles per minute) as follows:

$$f_n = 187.6 \sqrt{\frac{1}{\Delta_s}}$$

B. Vertical or other flange-mounted motors are frequently mounted on some part of the driven machine such as pump adaptor. The resulting system may have a radial resonant frequency (reed frequency) the same order of magnitude as the rotational speed of the motor. This system frequency can be calculated from the preceding equation. When the resonant frequency of the system is too close to the rotational speed, a damaging vibration level may result.

C. The vertical motor manufacturer should supply the following information to aid in determining the system resonant frequency, f_n:

1. Motor weight.
2. Center of gravity location—This is the distance from the motor mounting flange to the center of gravity of the motor.
3. Motor static deflection—This is the distance the center of gravity would be displaced downward from its original position if the motor were horizontally mounted. This value assumes that the motor uses its normal

Copyright National Electrical Manufacturers Association
Provided by IHS under license with NEMA
No reproduction or networking permitted without license from IHS
Not for Resale

9009279 0003867 667

mounting and fastening means but that the foundation to which it is fastened does not deflect.

Authorized Engineering Information 7-13-1977.

MG 1-20.55 Effects of Unbalanced Voltages on the Performance of Polyphase Squirrel-cage Induction Motors

When the line voltages applied to a polyphase induction motor are not equal, unbalanced currents in the stator windings will result. A small percentage voltage unbalance will result in a much larger percentage current unbalance. Consequently, the temperature rise of the motor operating at a particular load and percentage voltage unbalance will be greater than for the motor operating under the same conditions with balanced voltages.

Voltages should be evenly balanced as closely as can be read on a voltmeter. If the voltages are unbalanced, the rated horsepower of polyphase squirrel-cage induction motors should be multiplied by the factor shown in Fig. 20-2 to reduce the possibility of damage to the motor.* Operation of the motor with more than a 5-percent voltage unbalance is not recommended.

When the derating curve of Fig. 20-2 is applied for operation on unbalanced voltages, the selection and setting of the overload device should take into account the combination of the derating factor applied to the motor and the increase in current resulting from the unbalanced voltages. This is a complex problem involving the variation in motor current as a function of load and voltage unbalance in addition to the characteristics of the overload device relative to $I_{maximum}$ or $I_{average}$. In the absence of specific information it is recommended that overload devices be selected and/or adjusted at the minimum value that does not result in tripping for the derating factor and voltage unbalance that applies. When unbalanced voltages are anticipated, it is recommended that the overload devices be selected so as to be responsive to $I_{maximum}$ in preference to overload devices responsive to $I_{average}$.

A. Effect on Performance—General

The effect of unbalanced voltages on polyphase induction motors is equivalent to the introduction of a "negative sequence voltage" having a rotation opposite to that occuring with balanced voltages. This negative sequence voltage produces an air gap flux rotating against the rotation of the rotor, tending to produce high currents. A small negative sequence voltage may produce current in the windings considerably in excess of those present under balanced voltage conditions.

B. Unbalance Defined ▲

The voltage unbalance in percent may be defined as follows:

$$\text{Percent Voltage Unbalance} = 100 \times \frac{\text{Maximum voltage deviation from average voltage}}{\text{Average voltage}}$$

EXAMPLE—With voltages of 220, 215 and 210, the average is 215, the maximum deviation from the average is 5, and the percent unbalance $= 100 \times \frac{5}{215} = 2.3$ percent.

C. Torques

The locked-rotor torque and breakdown torque are decreased when the voltage is unbalanced. If the voltage unbalance should be extremely severe, the torques might not be adequate for the application.

D. Full-load Speed

The full-load speed is reduced slightly when the motor operates at unbalanced voltages.

E. Currents

The locked-rotor current will be unbalanced to the same degree that the voltages are unbalanced but the locked rotor kVA will increase only slightly.

The currents at normal operating speed with unbalanced voltages will be greatly unbalanced in the order of approximately 6 to 10 times the voltage unbalance.

Authorized Engineering Information 5-19-1980, revised 9-20-1984.

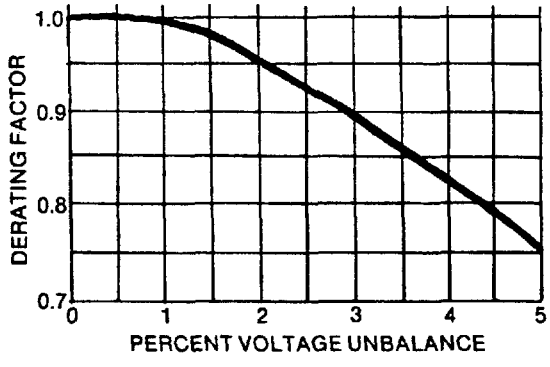

Fig. 20-2
Polyphase Squirrel-cage Induction Motors
Derating Factor Due to Unbalanced Voltage

* The derating factor shown in Fig. 20-2 is applicable only to motors with normal starting torque, i.e., motors typically intended for service with centrifugal pumps, fans, compressors, etc., where the required starting or pull-up torque, or both, is less than 100 percent of rated full-load torque. For motors with other torque characteristics, the motor manufacturer should be consulted.

▲ Revised.

Copyright National Electrical Manufacturers Association
Provided by IHS under license with NEMA
No reproduction or networking permitted without license from IHS Not for Resale

MANUFACTURING

MG 1-20.60 Nameplate Marking

The following minimum amount of information shall be given on all nameplates. For abbreviations, see MG 1-1.80.

A. ALTERNATING-CURRENT POLYPHASE SQUIRREL-CAGE MOTORS

1. Manufacturer's name, serial number or date code, and suitable identification.
2. Horsepower output.
3. Time rating.
4. Temperature rise.*
5. Rpm at rated load.
6. Frequency.
7. Number of phases.
8. Voltage.
9. Rated load amperes.
10. Code letter (see MG 1-10.36).

B. POLYPHASE WOUND-ROTOR MOTORS

1 to 9, inclusive—same as par. A, items 1 to 9, inclusive.

10. Secondary amperes at full load.
11. Secondary voltage.

NEMA Standard 11-14-1957, revised 11-21-1968.

* As an alternate marking, this item may be replaced by the following:

1. Maximum ambient temperature for which the motor is designed (see MG 1-20.40, Note III).
2. Insulation system designation (if stator and rotor use different classes of insulation systems, both insulation systems shall be given, that for the stator being given first).

Suggested Standard for Future Design 1-17-1968, NEMA Standard 12-16-1971.

MG 1-20.61 Tolerance Limits in Dimensions

The dimensions from the shaft center to the bottom of the feet shall be not greater than the nominal dimensions shown on the manufacturer's dimension sheet. When the motor is coupled or geared to the driven machines, shims are usually required to secure accurate alignment.

NEMA Standard 1-17-1968.

MG 1-20.62 Motor Terminal Housings and Boxes▲

A. When motors covered by this Part 20 are provided with terminal housings for line cable connections*, the minimum dimension and usable volume shall be as indicated in Table 20-2 for Type I terminal housings or Figure 20-3 for Type II terminal housings.

Unless otherwise specified, when motors are provided with terminal housings, a Type I terminal shall be supplied.

▲ Revised.

Table 20-2

TYPE I BOX
UNSUPPORTED AND INSULATED TERMINATIONS

Voltage	Maximum Full-load Current	Minimum Usable Volume, Cubic Inches	Minimum Dimension, Inches	Minimum Centerline Distance** Inches	Typical Maximum Horsepower
460	400	600	7	. . .	300
	600	1100	8	. . .	500
	900	2000	8	. . .	700
	1200	3200	10	. . .	1000
2300	160	180	5	. . .	600
	250	330	6	. . .	1000
	400	600	7	. . .	1750
	600	1100	8	. . .	2500
	900	2000	8	. . .	4000
4000	160	2000	8	12.5	1000
	700	5600	14	16	5000
	1000	8000	16	20	7000
6600	260	5600	14	16	3000
	680	8000	16	20	8000

* Terminal housings containing surge capacitors, surge arresters, current transformers, or potential transformers require individual consideration.
** Minimum distance from the entrance plate for conduit entrance to the centerline of motor leads.

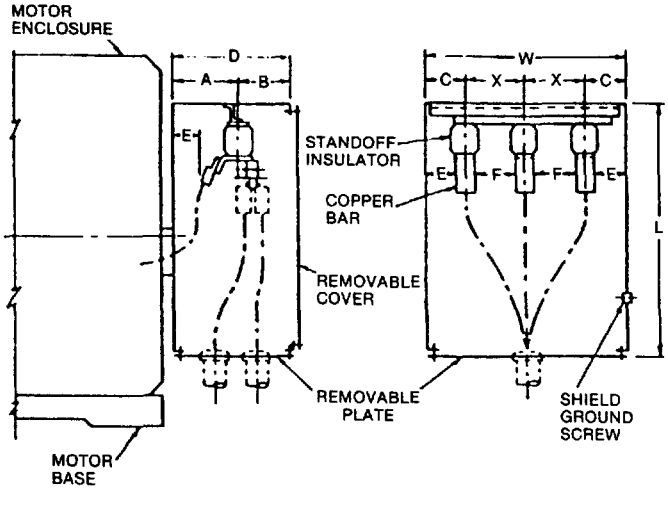

Minimum Dimensions (inches)

Motor Voltage	L	W	D	A	B	C	X	E	F
460- 575	24	18	18	9-1/2	8-1/2	4	5	2-1/2	4
2300-4000	36	27	18	9-1/2	8-1/2	5-1/2	8	3-1/2	5
6600	36	30	18	9-1/2	8-1/2	6	9	4	6
13200	48	42	25	13-1/2	11-1/2	8-1/2	13-1/2	6-3/4	9-1/2

Fig. 20-3

Type II Motor Terminal Housing Standoff-Insulator-Supported Insulated or Uninsulated Terminations

Copyright National Electrical Manufacturers Association
Provided by IHS under license with NEMA
No reproduction or networking permitted without license from IHS
Not for Resale

9009279 0003869 43T

B. For motors rated 601 volts and higher, accessory leads shall terminate in a terminal box or boxes separate from the motor terminal housing. As an exception, current and potential transformers located in the motor terminal housing shall be permitted to have their secondary connections terminated in the motor terminal housing if separated from the motor leads by a suitable physical barrier.

C. For motors rated 601 volts and higher, the termination of leads of accessory items normally operating at a voltage of 50 volts (rms) or less shall be separated from leads of higher voltage by a suitable physical barrier to prevent accidental contact or terminated in a separate box.

NEMA Standard 11-12-1970, revised 1-14-1975; 11-3-1983; 11-15-1984.

MG 1-20.63 Embedded Detectors

Embedded temperature detectors are resistance temperature detectors or thermocouples built into the machine during construction at points which are inaccessible after the machine is built.

Unless otherwise specified, when machines are equipped with embedded detectors they shall be of the resistance temperature detector type. The resistance element shall have a minimum width of 0.25 inch, and the detector length shall be approximately as follows:

Core Length, Inches	Approximate Detector Length, Inches
12 or less	6
Greater than 12 and less than 40	10
40 or greater	20

As a minimum the number of detectors shall equal the number of phases for which the machine is wound, i.e., three detectors for a three-phase machine. The detectors shall be suitably distributed around the circumference, located between the coil sides, and in positions having normally the highest temperature along the length of the slot.

The detector shall be located in the center of the slot (with respect to the slot width) and in intimate contact with the insulation of both the upper and lower coil sides whenever possible; otherwise, it shall be in contact with the insulation of the upper coil side (that is, the coil side nearest the air gap). Each detector shall be installed, and its leads brought out, so that the detector is effectively protected from contact with cooling medium. If the detector does not occupy the full length of the core, suitable packing shall be inserted between the coils to the full length of the core to prevent the cooling medium from directly contacting the detector.

NEMA Standard 9-3-1980.

Copyright National Electrical Manufacturers Association
Provided by IHS under license with NEMA
No reproduction or networking permitted without license from IHS
Not for Resale

APPLICATION DATA

MG 1-20.80 Service Conditions

A. General

Motors should be properly selected with respect to their service conditions, usual or unusual, both of which involve the environmental conditions to which the machine is subjected and the operating conditions. Machines conforming to Part 20 of this publication are designed for operation in accordance with their ratings under usual service conditions. Some machines may also be capable of operating in accordance with their ratings under one or more unusual service conditions. Definite-purpose or special-purpose machines may be required for some unusual conditions.

Service conditions, other than those specified as usual, may involve some degree of hazard. The additional hazard depends upon the degree of departure from usual operating conditions and the severity of the environment to which the machine is exposed. The additional hazard results from such things as overheating, mechanical failure, abnormal deterioration of the insulation system, corrosion, fire and explosion.

Although past experience of the user may often be the best guide, the manufacturer of the driven equipment and the motor manufacturer should be consulted for further information regarding any unusual service conditions which increase the mechanical or thermal duty on the machine and, as a result, increase the chances for failure and consequent hazard. This further information should be considered by the user, his consultants, or others most familiar with the details of the application involved when making the final decision.

B. Usual Service Conditions

1. An ambient temperature in the range of 0°C to 40°C or, when water cooling is used, in the range of 10°C to 40°C.
2. An altitude not exceeding 3300 feet (1000 meters).
3. A location and supplementary enclosure, if any, such that there is no serious interference with the ventilation of the motor.

C. Unusual Service Conditions ▲

The manufacturer should be consulted if any unusual service conditions exist which may affect the construction or operation of the motor. Among such conditions are:

1. Exposure to:
   a. Combustible, explosive, abrasive or conducting dusts.
   b. Lint or very dirty operating conditions where the accumulation of dirt will interfere with normal ventilation.
   c. Chemical fumes, flammable or explosive gases.
   d. Nuclear radiation.
   e. Steam, salt-laden air, or oil vapor.
   f. Damp or very dry locations, radiant heat, vermin infestation, or atmospheres conducive to the growth of fungus.
   g. Abnormal shock, vibration, or mechanical loading from external sources.
   h. Abnormal axial or side thrust imposed on the motor shaft.
2. Operation where:
   a. There is excessive departure from rated voltage and/or frequency (see MG 1-20.45).
   b. The deviation factor of the alternating-current supply voltage exceeds 10 percent.
   c. The alternating-current supply voltage is unbalanced by more than 1 percent (see MG 1-20.55).
   d. Low noise levels are required.
3. Operation at speeds other than rated speed (see MG 1-20.45).
4. Operation in a poorly ventilated room, in a pit, or in an inclined position.
5. Operation where subjected to:
   a. Torsional impact loads.
   b. Repetitive abnormal overloads.
   c. Reversing or electric braking.
   d. Frequent starting (see MG 1-20.43).
   e. Out-of-phase bus transfer.

Authorized Engineering Information 11-15-1962, revised 7-15-1970; 1-29-1981; 9-17-1981.

MG 1-20.81 End Play and Rotor Float for Coupled Sleeve Bearing Horizontal Motors

Operating experience on horizontal sleeve bearing motors has shown that sufficient thrust to damage bearings may be transmitted to the motor through a flexible coupling. Damage to motor bearings due to thrusts under such conditions will be avoided if the following limits are observed by the motor manufacturer and the driven equipment/motor assembler:

▲ Revised.

Copyright National Electrical Manufacturers Association
Provided by IHS under license with NEMA
No reproduction or networking permitted without license from IHS Not for Resale

A. Where motors are provided with sleeve bearings, the motor bearings and limited-end-float coupling should be applied as indicated in the following table:

Motor Hp	Synchronous Speed of Motor, Rpm	Min Motor Rotor End Float, Inches	Max Coupling End Float,* Inches
500 and Below	1800 and Below	0.25	0.09
300 to 500 Incl.	3600 and 3000	0.50	0.19
600 and Higher	All Speeds	0.50	0.19

* Couplings with elastic axial centering forces are usually satisfactory without these precautions.

B. To facilitate the assembly of driven equipment and sleeve bearing motors, the motor manufacturer should:

1. Indicate on the motor outline drawing the minimum motor rotor end play in inches.
2. Mark rotor end play limits on motor shaft.

NOTE—The motor and the driven equipment should be assembled and adjusted at the installation site so that there will be some endwise clearance in the motor bearing under all operating conditions. The difference between the rotor end play and the end float in the coupling allows for expansion and contraction in the driven equipment, for clearance in the driven equipment thrust bearing, for endwise movement in the coupling, and for assembly.

Authorized Engineering Information 6-11-1946, revised 11-11-1954; 5-17-1955; 11-13-1969; 5-12-1975; 7-13-1977.

MG 1-20.82 Pulsating Stator Current

When the driven load, such as that of reciprocating-type pumps, compressors, etc., requires a variable torque during each revolution, it is recommended that the combined installation have sufficient inertia in its rotating parts to limit the variations* in motor stator current to a value not exceeding 66 percent of full-load current.

*The basis for determining this variation should be by oscillograph or similar measurement and not by ammeter readings. A line should be drawn on the oscillogram through the consecutive peaks of the current wave. This line is the envelope of the current wave. The variation is the difference between the maximum and minimum ordinates of this envelope. This variation should not exceed 66 percent of the maximum value of the rated full-load current of the motor. (The maximum value of the motor stator current is to be assumed as 1.41 times the rated full-load current.)

NEMA Standard 12-16-1971.
Authorized Engineering Information 1-27-1982.

MG 1-20.83 Aseismatic Capability

A. The susceptibility of motors to earthquake damage is particularly influenced by their mounting structures. Therefore, the aseismatic capability requirements for motors should be based on the response characteristics of the system consisting of the motor and mounting structure or equipment on which the motor will be mounted when subjected to the specified earthquake ground motions.

B. System aseismatic capability requirements should preferably be given in terms of the peak acceleration which a series of "single-degree-of-freedom" oscillators, mounted on the motor support structure system, would experience during the specified earthquake. A family of continuous plots of peak acceleration versus frequency over the complete frequency range and for various values of damping is referred to as a "frequency response spectrum" for the motor and support structure system. This frequency response spectrum should be utilized by those responsible for the system and/or mounting structure to determine the aseismatic capability requirement which is to be applied to the motor alone when it is mounted on its supporting structure. The motor manufacturer should furnish the required data for motor natural frequency and/or mass stiffness to allow this determination to be made.

C. Motor aseismatic capability requirements should preferably be stated as a single acceleration or "g" value as determined from the system structural characteristics and input data as outlined in par. A and B.

D. For motors covered by this Part 20, it is recommended that the supporting base structure for the motor limit the peak acceleration due to earthquakes to the following maximum values:

1. One and one-half g's in any direction.
2. One g vertically upward and downward in addition to the normal downward gravity of one g.

The loads imposed as a result of the foregoing inputs can be assumed to have negligible effect upon the operation of the motor.

NOTE I—Accelerations are given in g's or multiples of the "standard" gravitational acceleration (32.2 ft/sec^2) (9.81 meters/sec^2) and are based on an assumed motor damping factor of 1 percent. Horizontal and vertical accelerations are assumed to act individually but not simultaneously.

NOTE II—The axial restraint of the shaft in most horizontal applications is provided by the driven equipment or other devices external to the motor. In such cases, the axial seismic loading of the shaft should be included in the requirements for the driven equipment. In other applications, restraint of the driven equipment rotor may be provided by the motor. In such cases, the axial seismic loading of the shaft should be included in the requirements for the motor.

NOTE III—When a single g value is given, it is implied that this g value is the maximum value of peak acceleration on the actual frequency response curve for the motor when mounted on its supporting structure for a particular value of system structural damping and specified earthquake ground motion. Values for other locations are frequently inappropriate because of nonrigid characteristics of the intervening structure.

Authorized Engineering Information 1-14-1975.

MG 1-20.84 Belt, Chain and Gear Drive

When motors are for belt, chain or gear drive, the motor manufacturer should be consulted.

Authorized Engineering Information 5-17-1976.

MG 1-20.85 Bus Transfer or Reclosing ▲

A motor is inherently capable of developing transient torque (and current) considerably in excess of rated torque when exposed to an out-of-phase bus transfer or momentary voltage interruption and reclosing on the same bus. The magnitude of this transient torque may range from 2 to 20 times rated torque and is a function of the machine, operating conditions, switching times, systems inertia, and so forth.

To limit the possibility of damaging the motor or driven equipment, or both, it is recommended that the power supply system be designed so that the resultant vectorial volts per hertz between the

▲Revised.

Copyright National Electrical Manufacturers Association
Provided by IHS under license with NEMA
No reproduction or networking permitted without license from IHS
Not for Resale

motor residual volts per hertz and the incoming source volts per hertz at the instant the transfer or reclosing is completed does not exceed 1.33 per unit volts per hertz on the motor rated voltage and frequency bases (see Fig. 20-4).

The determination of safe transfer or reclosure time requires extensive knowledge of the mechanical and electrical characteristics of the motor and load system, and calculations by knowledgeable personnel.

Authorized Engineering Information 9-3-1980, revised 11-12-1981; 9-15-1983.

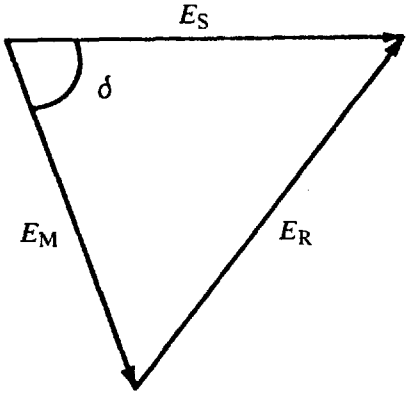

$$E_R = \sqrt{E_S^2 + E_M^2 - 2E_S E_M \cos\delta}$$

Where

E_S = System equivalent volts per hertz
= System voltage in per unit of motor rated voltage divided by system frequency in per unit of rated frequency

E_M = Motor residual flux expressed as equivalent volts per hertz
= Motor Terminal voltage in per unit of motor rated voltage divided by motor speed in per unit of synchronous speed

E_R = Resultant vectorial flux expressed as equivalent volts per hertz (per unit on the motor rated voltage and frequency base)

Fig. 20-4▲
Determination of Resultant Volts per Hertz on Bus Transfer or Reclosing

▲ Revised.

Copyright National Electrical Manufacturers Association
Provided by IHS under license with NEMA
No reproduction or networking permitted without license from IHS
Not for Resale

SECTION III

LARGE APPARATUS

Part 21. Synchronous Motors

The standards in this Part 21 of Section III cover (1) synchronous motors built in frames larger than those required for synchronous motors having the continuous open-type ratings given in the table below and (2) all ratings of synchronous motors of the revolving-field type of 450 rpm and slower speeds.

Synchronous Speed	Motors, Synchronous, Hp	
	Power Factor	
	Unity	0.8
3600	200	150
1800	200	150
1200	200	150
900	150	125
720	125	100
600	100	75
514	75	60

Copyright National Electrical Manufacturers Association
Provided by IHS under license with NEMA
No reproduction or networking permitted without license from IHS
Not for Resale

9009279 0003874 8T7

Part 21

LARGE APPARATUS—SYNCHRONOUS MOTORS

(The standards in Part 21 do not apply to nonexcited synchronous motors, nor do they necessarily apply to synchronous motors of motor-generator sets.)

RATINGS

MG 1-21.05 Basis of Rating

Synchronous motors covered by this Part 21 shall be rated on a continuous-duty basis unless otherwise specified. The output rating shall be expressed in horsepower available at the shaft at a specified speed, frequency, voltage and power factor.

NEMA Standard 5-20-1974.

MG 1-21.10 Horsepower and Speed Ratings ▲

Horsepower Ratings				
20	450	4000	17000	60000
25	500	4500	18000	65000
30	600	5000	19000	70000
40	700	5500	20000	75000
50	800	6000	22500	80000
60	900	7000	25000	90000
75	1000	8000	27500	100000
100	1250	9000	30000	
125	1500	10000	32500	
150	1750	11000	35000	
200	2000	12000	37500	
250	2250	13000	40000	
300	2500	14000	45000	
350	3000	15000	50000	
400	3500	16000	55000	

Speed Ratings, rpm at 60 hertz*				
3600	514	277	164	100
1800	450	257	150	95
1200	400	240	138	90
900	360	225	129	86
720	327	200	120	80
600	300	180	109	

* At 50 hertz, the speeds are 5/6 of the 60-hertz speeds.

NOTE—It is not practical to build motors of all horsepower ratings at all speeds.

Recommended Standard 10-29-1943, NEMA Standard 11-12-1953, revised 9-19-1962; 5-17-1976; 9-20-1984.

MG 1-21.11 Power Factor

The power factor for synchronous motors shall be unity or 0.8 leading (overexcited).

NEMA Standard 11-15-1951, revised 9-19-1962.

▲ Revised.

MG 1-21.12 Voltage Ratings

Voltages shall be 200, 230, 460, 575, 2300, 4000, 4600, 6600 and 13200 volts. These voltage ratings apply to 60-hertz circuits.

NEMA Standard 10-29-1943; revised 11-15-1956; 9-19-1962; 7-13-1967; 7-16-1969; 7-12-1978.

NOTE—It is not practical to build motors of all horsepower ratings for all these voltages. In general, based on motor design and manufacturing considerations, preferred motor voltage ratings are as follows:

Voltage Ratings	Horsepower
460 or 575	100 to 600
2300	200 to 4000
4000 or 4600	400 to 7000
6600	1000 to 12000
13200	3500 to 25000

Authorized Engineering Information 7-12-1978.

MG 1-21.13 Frequencies

Frequencies shall be 50 and 60 hertz.

NEMA Standard 9-11-1929, revised 9-19-1962.

MG 1-21.14 Excitation Voltage

The excitation voltages for field windings shall be 62½, 125, 250, 375 and 500 volts direct current. These excitation voltages do not apply to motors of the brushless type with direct-connected exciters.

NOTE—It is not practical to design all horsepower ratings of motors for all of the foregoing excitation voltages.

NEMA Standard 9-19-1962.

MG 1-21.15 Service Factor

When operated at rated voltage and frequency, synchronous motors covered by this Part 21 and having a rated temperature rise in accordance with MG 1-21.40 shall have a service factor of 1.0.

NEMA Standard 7-13-1967.

In those applications requiring an overload capacity, the use of a higher horsepower rating as given in MG 1-21.10 is recommended to avoid exceeding the temperature rises for the class of insulation used and to provide adequate torque capacity.

Authorized Engineering Information 5-24-1960.

Copyright National Electrical Manufacturers Association
Provided by IHS under license with NEMA
No reproduction or networking permitted without license from IHS
Not for Resale

9009279 0003875 733

MG 1-21.16 Typical kW Ratings of Exciters for 60-hertz Synchronous Motors

When synchronous motors have individual exciters, the kilowatt ratings given in Tables 21-1 to 21-4, inclusive, represent typical kilowatt ratings for such exciters.

TABLE 21-1
60-HERTZ, 1.0 POWER FACTOR, SYNCHRONOUS MOTORS, 1800-514 RPM

	Exciter Ratings, kW					
	Speed, Rpm					
Hp	1800	1200	900	720	600	514
20	0.75	0.75	...	...	...	...
25	0.75	0.75	1.0	...	...	...
30	0.75	1.0	1.0	1.5	...	...
40	0.75	1.0	1.5	1.5	1.5	...
50	1.0	1.5	1.5	1.5	2.0	...
60	1.0	1.5	1.5	2.0	2.0	...
75	1.0	1.5	2.0	2.0	3.0	3.0
100	1.5	1.5	2.0	2.0	3.0	3.0
125	1.5	2.0	3.0	3.0	3.0	3.0
150	1.5	2.0	3.0	3.0	3.0	4.5
200	2.0	3.0	3.0	3.0	4.5	4.5
250	2.0	3.0	3.0	4.5	4.5	4.5
300	2.0	3.0	4.5	4.5	4.5	4.5
350	3.0	3.0	4.5	4.5	4.5	6.5
400	3.0	3.0	4.5	4.5	6.5	6.5
450	3.0	4.5	4.5	4.5	6.5	6.5
500	3.0	4.5	4.5	4.5	6.5	6.5
600	3.0	4.5	6.5	6.5	6.5	6.5
700	4.5	4.5	6.5	6.5	6.5	9.0
800	4.5	6.5	6.5	6.5	9.0	9.0
900	4.5	6.5	6.5	9.0	9.0	9.0
1000	4.5	6.5	9.0	9.0	9.0	9.0
1250	6.5	6.5	9.0	9.0	13	13
1500	6.5	9.0	9.0	13	13	13
1750	9.0	9.0	13	13	13	13
2000	9.0	13	13	13	13	17
2250	9.0	13	13	13	17	17
2500	13	13	13	17	17	17
3000	13	13	17	17	17	21
3500	13	17	17	21	21	21
4000	17	17	21	21	21	25
4500	17	21	21	21	25	25
5000	17	21	25	25	33	33
5500	21	25	25	25	33	33
6000	21	25	33	33	33	33
7000	25	33	33	33	33	40
8000	33	33	40	40	40	40
9000	33	40	40	40	50	50
10000	33	40	50	50	50	50
11000	40	50	50	50	50	50
12000	40	50	50	50	65	65
13000	50	50	65	65	65	65
14000	50	65	65	65	65	65
15000	50	65	65	65	65	65
16000	65	65	65	65	85	85
17000	65	65	85	85	85	85
18000	65	65	85	85	85	85
19000	65	85	85	85	85	85
20000	65	85	85	85	85	85
22500	85	85	85	100	100	100
25000	85	100	100	100	100	125
27500	100	100	125	125	125	125
30000	100	125	125	125	125	125

Copyright National Electrical Manufacturers Association
Provided by IHS under license with NEMA
No reproduction or networking permitted without license from IHS
Not for Resale

9009279 0003876 67T

TABLE 21-2
60-HERTZ, 0.8 POWER FACTOR, SYNCHRONOUS MOTORS, 1800-514 RPM

	Exciter Ratings, kW					
	Speed, Rpm					
Hp	1800	1200	900	720	600	514
20	0.75	1.5	...	...	...	...
25	1.0	1.5	2.0	...	...	...
30	1.0	1.5	2.0	2.0	...	...
40	1.0	1.5	2.0	3.0	3.0	...
50	1.5	2.0	3.0	3.0	3.0	...
60	1.5	2.0	3.0	3.0	3.0	...
75	1.5	2.0	3.0	3.0	4.5	4.5
100	2.0	3.0	3.0	4.5	4.5	4.5
125	2.0	3.0	4.5	4.5	4.5	4.5
150	2.0	3.0	4.5	4.5	4.5	6.5
200	3.0	4.5	4.5	4.5	6.5	6.5
250	3.0	4.5	4.5	6.5	6.5	6.5
300	3.0	4.5	6.5	6.5	6.5	9.0
350	4.5	4.5	6.5	6.5	9.0	9.0
400	4.5	6.5	6.5	6.5	9.0	9.0
450	4.5	6.5	6.5	9.0	9.0	9.0
500	4.5	6.5	6.5	9.0	9.0	9.0
600	6.5	6.5	9.0	9.0	13	13
700	6.5	9.0	9.0	9.0	13	13
800	6.5	9.0	9.0	13	13	13
900	6.5	9.0	13	13	13	13
1000	9.0	9.0	13	13	13	17
1250	9.0	13	13	13	17	17
1500	13	13	17	17	17	17
1750	13	13	17	17	21	21
2000	13	17	17	21	21	21
2250	13	17	21	21	25	25
2500	17	17	21	21	25	25
3000	17	21	25	25	33	33
3500	21	25	25	33	33	33
4000	21	25	33	33	33	40
4500	25	33	33	33	40	40
5000	33	33	40	40	40	40
5500	33	33	40	40	50	50
6000	33	40	40	50	50	50
7000	40	40	50	50	65	65
8000	40	50	50	65	65	65
9000	50	50	65	65	65	65
10000	50	65	65	65	85	85
11000	65	65	85	85	85	85
12000	65	65	85	85	85	85
13000	65	85	85	85	100	100
14000	65	85	85	85	100	100
15000	85	85	100	100	100	100
16000	85	85	100	100	125	125
17000	85	100	100	100	125	125
18000	85	100	125	125	125	125
19000	100	100	125	125	125	125
20000	100	125	125	125	125	170
22500	125	125	170	170	170	170
25000	125	125	170	170	170	170
27500	125	170	170	170	170	170
30000	170	170	170	170	200	200

Copyright National Electrical Manufacturers Association
Provided by IHS under license with NEMA
No reproduction or networking permitted without license from IHS
Not for Resale

9009279 0003877 506

TABLE 21-3
60-HERTZ, 1.0 POWER FACTOR, SYNCHRONOUS MOTORS, 450–150 RPM

	Exciter Ratings, kW												
	Speed, Rpm												
Hp	450	400	360	327	300	277	257	240	225	200	180	164	150
20	1.5	1.5	2.0	2.0	2.0	2.0	2.0	2.0	2.0	3.0	3.0	3.0	3.0
25	2.0	2.0	2.0	2.0	2.0	3.0	3.0	3.0	3.0	3.0	3.0	3.0	3.0
30	2.0	2.0	2.0	2.0	3.0	3.0	3.0	3.0	3.0	3.0	3.0	3.0	4.5
40	2.0	3.0	3.0	3.0	3.0	3.0	3.0	3.0	3.0	3.0	4.5	4.5	4.5
50	3.0	3.0	3.0	3.0	3.0	3.0	3.0	3.0	3.0	4.5	4.5	4.5	4.5
60	3.0	3.0	3.0	3.0	3.0	3.0	4.5	4.5	4.5	4.5	4.5	4.5	4.5
75	3.0	3.0	3.0	3.0	4.5	4.5	4.5	4.5	4.5	4.5	4.5	4.5	4.5
100	3.0	4.5	4.5	4.5	4.5	4.5	4.5	4.5	4.5	4.5	6.5	6.5	6.5
125	4.5	4.5	4.5	4.5	4.5	4.5	4.5	4.5	6.5	6.5	6.5	6.5	6.5
150	4.5	4.5	4.5	4.5	4.5	6.5	6.5	6.5	6.5	6.5	6.5	6.5	6.5
200	4.5	4.5	4.5	6.5	6.5	6.5	6.5	6.5	6.5	6.5	6.5	9.0	9.0
250	4.5	6.5	6.5	6.5	6.5	6.5	6.5	6.5	6.5	9.0	9.0	9.0	9.0
300	6.5	6.5	6.5	6.5	6.5	6.5	6.5	9.0	9.0	9.0	9.0	9.0	9.0
350	6.5	6.5	6.5	6.5	6.5	9.0	9.0	9.0	9.0	9.0	9.0	9.0	13
400	6.5	6.5	6.5	9.0	9.0	9.0	9.0	9.0	9.0	9.0	13	13	13
450	6.5	6.5	9.0	9.0	9.0	9.0	9.0	9.0	9.0	13	13	13	13
500	6.5	9.0	9.0	9.0	9.0	9.0	9.0	9.0	13	13	13	13	13
600	9.0	9.0	9.0	9.0	9.0	9.0	13	13	13	13	13	13	13
700	9.0	9.0	9.0	13	13	13	13	13	13	13	13	13	13
800	9.0	9.0	13	13	13	13	13	13	13	13	13	17	17
900	9.0	13	13	13	13	13	13	13	13	17	17	17	17
1000	13	13	13	13	13	13	13	13	17	17	17	17	17
1250	13	13	13	13	13	17	17	17	17	17	17	17	21
1500	13	13	17	17	17	17	17	17	17	21	21	21	21
1750	17	17	17	17	17	17	17	21	21	21	21	21	21
2000	17	17	17	17	21	21	21	21	21	21	25	25	25
2250	17	17	21	21	21	21	21	21	21	25	25	25	25
2500	17	21	21	21	21	21	21	25	25	25	25	33	33
3000	21	21	21	25	25	25	25	25	25	33	33	33	33
3500	25	25	25	25	25	25	33	33	33	33	33	33	33
4000	25	25	33	33	33	33	33	33	33	33	33	40	40
4500	33	33	33	33	33	33	33	33	33	40	40	40	40
5000	33	33	33	33	33	33	33	40	40	40	40	40	40
5500	33	33	33	33	33	40	40	40	40	40	40	50	50
6000	33	33	40	40	40	40	40	40	40	50	50	50	50
7000	40	40	40	40	40	50	50	50	50	50	50	50	50
8000	40	50	50	50	50	50	50	50	50	50	65	65	65
9000	50	50	50	50	50	50	50	65	65	65	65	65	65
10000	50	50	50	65	65	65	65	65	65	65	65	65	65
11000	65	65	65	65	65	65	65	65	65	65	65	85	85
12000	65	65	65	65	65	65	65	65	65	85	85	85	85
13000	65	65	65	65	65	65	85	85	85	85	85	85	85
14000	65	65	85	85	85	85	85	85	85	85	85	85	85
15000	85	85	85	85	85	85	85	85	85	85	85	85	100
16000	85	85	85	85	85	85	85	85	85	85	85	100	100
17000	85	85	85	85	85	85	85	85	85	100	100	100	100
18000	85	85	85	85	85	85	100	100	100	100	100	100	100
19000	85	85	85	100	100	100	100	100	100	100	100	125	125
20000	100	100	100	100	100	100	100	100	100	100	100	125	125

Copyright National Electrical Manufacturers Association
Provided by IHS under license with NEMA
No reproduction or networking permitted without license from IHS
Not for Resale

Copyright National Electrical Manufacturers Association
Provided by IHS under license with NEMA
No reproduction or networking permitted without license from IHS
Not for Resale

9009279 0003878 442

TABLE 21-4
60-HERTZ, 0.8 POWER FACTOR, LOW-SPEED SYNCHRONOUS MOTORS, 450–150 RPM

	Exciter Ratings, kW												
	Speed, Rpm												
Hp	450	400	360	327	300	277	257	240	225	200	180	164	150
20	3.0	3.0	3.0	3.0	4.5	4.5	4.5	4.5	4.5	4.5	4.5	4.5	6.5
25	3.0	3.0	3.0	4.5	4.5	4.5	4.5	4.5	4.5	4.5	4.5	6.5	6.5
30	3.0	3.0	4.5	4.5	4.5	4.5	4.5	4.5	4.5	6.5	6.5	6.5	6.5
40	4.5	4.5	4.5	4.5	4.5	4.5	4.5	6.5	6.5	6.5	6.5	6.5	6.5
50	4.5	4.5	4.5	4.5	4.5	6.5	6.5	6.5	6.5	6.5	6.5	6.5	9.0
60	4.5	4.5	4.5	6.5	6.5	6.5	6.5	6.5	6.5	6.5	6.5	9.0	9.0
75	4.5	4.5	6.5	6.5	6.5	6.5	6.5	6.5	6.5	9.0	9.0	9.0	9.0
100	6.5	6.5	6.5	6.5	6.5	6.5	6.5	9.0	9.0	9.0	9.0	9.0	13
125	6.5	6.5	6.5	6.5	6.5	9.0	9.0	9.0	9.0	9.0	9.0	13	13
150	6.5	6.5	6.5	9.0	9.0	9.0	9.0	9.0	9.0	9.0	13	13	13
200	6.5	9.0	9.0	9.0	9.0	9.0	9.0	13	13	13	13	13	13
250	9.0	9.0	9.0	9.0	9.0	13	13	13	13	13	13	13	13
300	9.0	9.0	9.0	13	13	13	13	13	13	13	13	17	17
350	9.0	9.0	13	13	13	13	13	13	13	13	17	17	17
400	13	13	13	13	13	13	13	13	13	17	17	17	17
450	13	13	13	13	13	13	13	17	17	17	17	17	21
500	13	13	13	13	13	13	17	17	17	17	17	21	21
600	13	13	13	17	17	17	17	17	17	17	21	21	21
700	13	13	17	17	17	17	17	17	17	21	21	21	21
800	17	17	17	17	17	17	17	21	21	21	21	25	25
900	17	17	17	17	17	21	21	21	21	21	25	25	25
1000	17	17	17	21	21	21	21	21	21	25	25	25	25
1250	21	21	21	21	21	21	25	25	25	25	33	33	33
1500	21	21	21	25	25	25	25	25	25	33	33	33	33
1750	25	25	25	25	25	25	33	33	33	33	33	33	33
2000	25	25	33	33	33	33	33	33	33	33	40	40	40
2250	33	33	33	33	33	33	33	33	33	40	40	40	40
2500	33	33	33	33	33	33	40	40	40	40	40	40	40
3000	33	33	40	40	40	40	40	40	40	40	50	50	50
3500	40	40	40	40	40	40	50	50	50	50	50	50	50
4000	40	40	50	50	50	50	50	50	50	50	65	65	65
4500	50	50	50	50	50	50	50	50	65	65	65	65	65
5000	50	50	50	50	50	65	65	65	65	65	65	65	65
5500	50	50	65	65	65	65	65	65	65	65	65	65	65
6000	65	65	65	65	65	65	65	65	65	65	85	85	85
7000	65	65	65	65	65	65	85	85	85	85	85	85	85
8000	65	85	85	85	85	85	85	85	85	85	85	85	85
9000	85	85	85	85	85	85	85	85	85	100	100	100	100
10000	85	85	85	85	100	100	100	100	100	100	100	100	100
11000	100	100	100	100	100	100	100	100	100	100	125	125	125
12000	100	100	100	100	100	100	125	125	125	125	125	125	125
13000	100	125	125	125	125	125	125	125	125	125	125	125	125
14000	125	125	125	125	125	125	125	125	125	125	125	170	170
15000	125	125	125	125	125	125	125	125	125	170	170	170	170
16000	125	125	125	170	170	170	170	170	170	170	170	170	170
17000	125	170	170	170	170	170	170	170	170	170	170	170	170
18000	170	170	170	170	170	170	170	170	170	170	170	170	170
19000	170	170	170	170	170	170	170	170	170	170	170	170	170
20000	170	170	170	170	170	170	170	170	170	170	170	170	170

Recommended Standard 10-29-1943, revised 6-24-1949; 11-15-1951; 11-13-1952; 5-17-1953; NEMA Standard 11-12-1953, revised 11-12-1959; Authorized Engineering Information 11-17-1960, revised 9-19-1962; 11-16-1972; 5-12-1975.

9009279 0003879 389

TESTS AND PERFORMANCE

MG 1-21.40 Temperature Rise—Synchronous Motors

The observable temperature rise under rated load conditions of each of the various parts of the synchronous motor, above the temperature of the cooling air, shall not exceed the values given in the following table. The temperature of the cooling air* is the temperature of the external air as it enters the ventilating openings of the machine, and the temperature rises given in the table are based on a maximum temperature of 40 °C for this external air. Temperatures shall be determined in accordance with the latest revision of IEEE Std 115, *Test Procedure for Synchronous Machines.*

Item	Machine Part	Method of Temperature Determination	Temperature Rise, Degrees C			
			Class of Insulation System			
			A	B	F	H
1	Armature winding					
	a. All horsepower ratings	Resistance	60	80	105	125
	b. 1500 horsepower and less	Embedded detector†	70	90	115	140
	c. Over 1500 horsepower					
	(1) 7000 volts and less	Embedded detector†	65	85	110	135
	(2) Over 7000 volts	Embedded detector†	60	80	105	125
2	Field winding					
	a. Salient-pole motors	Resistance	60	80	105	125
	b. Cylindrical rotor motors	Resistance	...	85	105	125
3	Cores, amortisseur windings and mechanical parts such as collector rings, brushholders, and brushes, may attain such temperatures as will not injure the machine in any respect.					

* For totally-enclosed water-air-cooled machines, the temperature of the cooling air is the temperature of the air leaving the coolers. See Note I.

† Embedded detectors are located within the slot of the machine and can be either resistance elements or thermocouples. For motors equipped with embedded detectors, this method shall be used to demonstrate conformity with the standard. (See MG 1-20.63.)

NOTE I—Totally-enclosed water-air-cooled machines are normally designed for the maximum cooling water temperature encountered at the location where each machine is to be installed. With a cooling water temperature not exceeding that for which the machine is designed:

a. On machines designed for cooling water temperatures up to 30 °C—The temperature of the air leaving the coolers shall not exceed 40 °C.

b. On machines designed for higher cooling water temperatures—the temperature of the air leaving the coolers may exceed 40 °C provided the temperature rises of the machine parts are then limited to values less than those given in the table by the number of degrees that the temperature of the air leaving the coolers exceeds 40 °C.

NOTE II—For motors which operate under prevailing barometric pressure and which are designed not to exceed the specified temperature rise at altitudes from 3300 feet (1000 meters) to 13000 feet (4000 meters), the temperature rises, as checked by tests at low altitudes, shall be less than those listed in the foregoing table by 1 percent of the specified temperature rise for each 330 feet (100 meters) of altitude in excess of 3300 feet (1000 meters).

Suggested Standard for Future Design 11-12-1959, NEMA Standard 9-19-1962, revised 11-15-1962; 8-20-1966; 7-16-1969; 11-8-1973; 9-3-1980.

NOTE III—Temperature rises in the foregoing table are based upon a reference ambient temperature of 40 °C. However, it is recognized that synchronous motors may be required to operate in an ambient temperature higher than 40 °C. For successful operation of the motors in ambient temperatures higher than 40 °C, it is recommended that the temperature rises of the motors given in the foregoing table be reduced, as indicated below, for the ranges of ambient temperatures given. (Exception—for totally-enclosed water-air-cooled machines, see Note 1.)

Ambient Temperature, Degrees C	Value by which the Temperature Rises in the Foregoing Table Should be Reduced, Degrees C
Above 40 up to and including 50	10
Above 50 up to and including 60	20

Authorized Engineering Information 5-24-1960; revised 11-8-1973.

MG 1-21.41 Torques* ▲

The locked-rotor, pull-in and pull-out torques, with rated voltage and frequency applied, shall be not less than the following:

Speed, Rpm	Hp	Power Factor	Torques, Per Cent of Rated Full-load Torque		
			Locked-rotor	Pull-in (Based on Normal Wk^2 of Load)**†	Pull-out†
500 to 1800	200 and below	1.0	100	100	150
	150 and below	0.8	100	100	175
	250 to 1000	1.0	60	60	150
	200 to 1000	0.8	60	60	175
	1250 and larger	1.0	40	60	150
		0.8	40	60	175
450 and below	All ratings	1.0	40	30	150
		0.8	40	30	200

*Values of torque apply to salient-pole machines. Values of torque for cylindrical-rotor machines are subject to individual negotiation between manufacturer and user.
**Values of normal Wk^2 of load are given in MG 1-21.42.
†With rated excitation current applied.

The motors shall be capable of delivering the pull-out torque for at least 1 minute.

NEMA Standard 9-19-1962. revised 9-20-1984.

▲ Revised.

Copyright National Electrical Manufacturers Association
Provided by IHS under license with NEMA
No reproduction or networking permitted without license from IHS
Not for Resale

9009279 0003880 0T0

MG 1-21.42 Normal Wk^2 of Load* ▲

The values of normal Wk^2 of load on which the pull-in torque values given in MG 1-21.41 are based, shall be as given in Table 21-5. They are calculated from the formula:

$$\text{Normal } Wk^2 \text{ of load} = \frac{0.375 \times (\text{Horsepower Rating})^{1.15}}{(\text{Speed in Rpm}/1000)^2}$$

*Values of normal Wk^2 of load apply to salient-pole machines. Values of normal Wk^2 for cylindrical-rotor machines are subject to individual negotiation between manufacturer and user.

NEMA Standard 10-29-1943, revised 9-19-1962; 9-20-1984.

MG 1-21.43 Number of Starts* ▲

A. Synchronous motors shall be capable of making the following starts, providing the Wk^2 of the load, the load torque during acceleration, the applied voltage, and the method of starting are those for which the motor was designed:

1. Two starts in succession, coasting to rest between starts, with the motor initially at ambient temperature, or
2. One start with the motor initially at a temperature not exceeding its rated load operating temperature.

Recommended Standard 9-11-1929, NEMA Standard 11-12-1953, revised 6-1-1959.

B. If additional starts are required, it is recommended that none be made until all conditions affecting operation have been thoroughly investigated and the apparatus examined for evidence of excessive heating. It should be recognized that the number of starts should be kept to a minimum since the life of the motor is affected by the number of starts.

C. When requested by the purchaser, a separate starting information plate will be supplied on the motor.

*The number of starts apply to salient-pole machines. The number of starts for cylindrical-rotor machines is subject to individual negotiation between manufacturer and user.

Authorized Engineering Information 6-1-1959, revised 11-12-1970; 9-20-1984.

MG 1-21.44 Efficiency

Efficiency and losses shall be determined in accordance with the latest revision of IEEE Std 115. The efficiency shall be determined at rated output, voltage, frequency and power factor.

The following losses shall be included in determining the efficiency:

1. I^2R loss of armature.
2. I^2R loss of field.
3. Core loss.
4. Stray load loss.
5. Friction and windage loss.*
6. Exciter loss if exciter is supplied with and driven from the shaft of the machine.

Power required for auxiliary items, such as external pumps or fans, that are necessary for the operation of the motor, shall be stated separately.

In determining I^2R losses, the resistance of each winding shall be corrected to a temperature equal to an ambient temperature of 25°C plus the observed rated load temperature rise measured by resistance. When the rated load temperature rise has not been measured, the resistance of the winding shall be corrected to the following temperature:

Class of Insulation System	Temperature, Degrees C
A	75
B	95
F	115
H	130

This reference temperature shall be used for determining I^2R losses at all loads. If the rated temperature rise is specified as that of a lower class of insulation system, the temperature for resistance correction shall be that of the lower insulation class.

* In the case of motors which are furnished with thrust bearings, only that portion of the thrust bearing loss produced by the motor itself shall be included in the efficiency calculation. Alternatively, a calculated value of efficiency, including bearing loss due to external thrust load, may be specified.

In the case of motors which are furnished with less than a full set of bearings, friction and windage losses which are representative of the actual installation shall be determined by (1) calculation or (2) experience with shop test bearings and shall be included in the efficiency calculations.

NEMA Standard 11-12-1964, revised 9-21-1967; 1-17-1968; 5-12-1969; 5-17-1971; 1-14-1975.

▲ Revised.

Copyright National Electrical Manufacturers Association
Provided by IHS under license with NEMA
No reproduction or networking permitted without license from IHS
Not for Resale

TABLE 21-5
NORMAL Wk^2 OF LOAD IN LB-FT^2

Hp	Speed, Rpm									
	1800	1200	900	720	600	514	450	400	360	327
20	3.63	8.16	14.51	22.7	32.7	44.4	58.0	73.5	90.7	109.7
25	4.69	10.55	18.76	29.3	42.2	57.4	75.0	95.0	117.2	141.9
30	5.78	13.01	23.1	36.1	52.0	70.8	92.5	117.1	144.6	174.9
40	8.05	18.11	32.2	50.3	72.5	98.6	123.8	163.0	201	244
50	10.41	23.4	41.6	65.0	93.7	127.5	166.5	211	260	315
60	12.83	28.9	51.3	80.2	115.5	157.2	205	260	321	388
75	16.59	37.3	66.4	103.7	149.3	203	265	336	415	502
100	23.1	52.0	92.4	144.3	208	283	369	468	577	699
125	29.8	67.2	119.3	186.6	269	366	478	604	746	903
150	36.8	82.8	147.2	230	331	451	589	745	920	1114
200	51.2	115.3	205	320	461	628	820	1038	1281	1550
250	66.2	149.0	265	414	596	811	1060	1341	1656	2000
300	81.7	183.8	327	511	735	1001	1307	1654	2040	2470
350	97.5	219	390	610	878	1195	1561	1975	2440	2950
400	113.7	256	455	711	1024	1393	1820	2300	2840	3440
450	130.2	293	521	814	1172	1595	2080	2640	3260	3940
500	147.0	331	588	919	1323	1801	2350	2980	3670	4450
600	181.3	408	725	1133	1632	2220	2900	3670	4530	5480
700	216	487	866	1353	1948	2650	3460	4380	5410	6550
800	252	568	1009	1577	2270	3090	4040	5110	6310	7630
900	289	650	1156	1806	2600	3540	4620	5850	7220	8740
1000	326	734	1305	2040	2940	4000	5220	6610	8160	9870
1250	422	949	1687	2640	3790	5160	6750	8540	10540	12750
1500	520	1170	2080	3250	4680	6370	8320	10530	13000	15730
1750	621	1397	2480	3880	5590	7610	9930	12570	15520	18780
2000	724	1629	2900	4520	6510	8870	11580	14660	18100	21900
2250	829	1865	3320	5180	7460	10150	13260	16780	20700	25100
2500	936	2110	3740	5850	8420	11460	14970	18950	23400	28300
3000	1154	2600	4620	7210	10390	14140	18460	23400	28800	34900
3500	1378	3100	5510	8610	12400	16880	22000	27900	34400	41700
4000	1606	3610	6430	10040	14460	19680	25700	32500	40200	48600
4500	1839	4140	7360	11500	16550	22500	29400	37200	46000	55600
5000	2080	4670	8310	12980	18690	25400	33200	42000	51900	62800
5500	2320	5210	9270	14480	20900	28400	37100	46900	57900	70100
6000	2560	5760	10240	16000	23000	31400	41000	51900	64000	77500
7000	3060	6880	12230	19110	27500	37500	48900	61900	76400	92500
8000	3560	8020	14260	22300	32100	43700	57000	72200	89100	107800
9000	4080	9180	16330	25500	36700	50000	65300	82700	102000	123500
10000	4610	10370	18430	28800	41500	56400	73700	93300	115200	139400

(*Continued*)

Copyright National Electrical Manufacturers Association
Provided by IHS under license with NEMA
No reproduction or networking permitted without license from IHS
Not for Resale

9009279 0003882 973

TABLE 21-5 (*Continued*)
NORMAL Wk^2 OF LOAD IN LB-FT^2

Hp	Speed, Rpm								
	300	277	257	240	225	200	180	164	150
20	130.6	153.3	177.8	204	232	294	363	439	522
25	168.8	198.1	230	264	300	380	469	567	675
30	208	244	283	325	370	468	578	700	833
40	290	340	395	453	515	652	805	974	1159
50	375	440	510	585	666	843	1041	1259	1499
60	462	542	629	721	821	1040	1283	1553	1848
75	597	701	813	933	1062	1344	1659	2010	2390
100	831	976	1132	1299	1478	1871	2310	2790	3330
125	1075	1261	1463	1679	1910	2420	2980	3610	4300
150	1325	1555	1804	2070	2360	2980	3680	4450	5300
200	1845	2170	2510	2880	3280	4150	5120	6200	7380
250	2380	2800	3250	3730	4240	5370	6620	8010	9540
300	2940	3450	4000	4600	5230	6620	8170	9880	11760
350	3510	4120	4780	5490	6240	7900	9750	11800	14050
400	4090	4800	5570	6400	7280	9210	11370	13760	16380
450	4690	5500	6380	7320	8330	10550	13020	15760	18750
500	5290	6210	7200	8270	9410	11910	14700	17790	21200
600	6530	7660	8880	10200	11600	14680	18130	21900	26100
700	7790	9140	10610	12180	13850	17530	21600	26200	31200
800	9090	10660	12370	14200	16150	20400	25200	30500	36300
900	10400	12210	14160	16260	18490	23400	28900	35000	41600
1000	11740	13780	15980	18350	20900	26400	32600	39500	47000
1250	15180	17810	20700	23700	27000	34200	42200	51000	60700
1500	18720	22000	25500	29200	33300	42100	52000	62900	74900
1750	22400	26200	30400	34900	39700	50300	62100	75100	89400
2000	26100	30600	35500	40700	46300	58600	72400	87600	104200
2250	29800	35000	40600	46600	53000	67100	82900	100300	119400
2500	33700	39500	45800	52600	59900	75800	93600	113200	134700
3000	41500	48800	56500	64900	73900	93500	115400	139600	166200
3500	49600	58200	67500	77500	88200	111600	137800	166700	198400
4000	57800	67900	78700	90400	102800	130100	160600	194400	231000
4500	66200	77700	90100	103500	117700	149000	183900	223000	265000
5000	74700	87700	101700	116800	132900	168200	208000	251000	299000
5500	83400	97900	113500	130300	148300	187700	232000	280000	334000
6000	92200	108200	125500	144000	163900	207000	256000	310000	369000
7000	110100	129200	149800	172000	195700	248000	306000	370000	440000
8000	128300	150600	174700	201000	228000	289000	356000	431000	513000
9000	146900	172500	200000	230000	261000	331000	408000	494000	588000
10000	165900	194700	226000	259000	295000	373000	461000	558000	664000

(*Continued*)

Copyright National Electrical Manufacturers Association
Provided by IHS under license with NEMA
No reproduction or networking permitted without license from IHS
Not for Resale

9009279 0003883 80T

TABLE 21-5 (*Continued*)
NORMAL Wk^2 OF LOAD IN LB-FT^2

	Speed, Rpm								
Hp	138	129	120	109	100	95	90	86	80
20	613	711	816	988	1175	1310	1451	1600	1837
25	793	919	1055	1277	1519	1693	1876	2070	2370
30	977	1134	1301	1575	1874	2090	2310	2550	2930
40	1361	1578	1811	2190	2610	2910	3220	3550	4080
50	1759	2040	2340	2830	3370	3760	4160	4590	5270
60	2170	2520	2890	3490	4160	4630	5130	5660	6500
75	2800	3250	3760	4520	5370	5990	6640	7320	8400
100	3900	4530	5200	6290	7480	8340	9240	10180	11690
125	5040	5850	6720	8130	9670	10780	11940	13160	15110
150	6220	7220	8280	10020	11930	13290	14720	16230	18640
200	8660	10040	11530	13950	16600	18500	20500	22600	25900
250	11190	12980	14900	18030	21500	23900	26500	29200	33500
300	13810	16010	18380	22200	26500	29500	32700	36000	41400
350	16480	19120	21900	26600	31600	35200	39000	43000	49400
400	19220	22300	25600	31000	36800	41100	45500	50200	57600
450	22000	25500	29300	35500	42200	47000	52100	57400	65900
500	24800	28800	33100	40000	47600	53100	58800	64800	74400
600	30600	35500	40800	49400	58700	65400	72500	79900	91800
700	36600	42400	48700	58900	70100	78100	86600	95500	109600
800	42700	49500	56800	68700	81800	91100	100900	111300	127800
900	48800	56600	65000	78700	93600	104300	115600	127400	146300
1000	55100	63900	73400	88800	105700	117800	130500	143900	165100
1250	71300	82600	94900	114800	136600	152200	168700	185900	213000
1500	87900	101900	117000	141600	168500	187700	208000	229000	263000
1750	104900	121700	139700	169000	201000	224000	248000	274000	314000
2000	122300	141900	162900	197100	235000	261000	290000	319000	366000
2250	140100	162500	186500	226000	269000	299000	332000	366000	420000
2500	158100	183400	211000	255000	303000	338000	374000	413000	474000
3000	195000	226000	260000	314000	374000	417000	462000	509000	584000
3500	233000	270000	310000	375000	446000	497000	551000	608000	697000
4000	271000	315000	361000	437000	520000	580000	643000	708000	813000
4500	311000	361000	414000	501000	596000	664000	736000	811000	931000
5000	351000	407000	467000	565000	673000	750000	831000	916000	1051000
5500	392000	454000	521000	631000	751000	836000	927000	1022000	1173000
6000	433000	502000	576000	697000	830000	924000	1024000	1129000	1296000
7000	517000	599000	688000	832000	991000	1104000	1223000	1348000	1548000
8000	602000	699000	802000	971000	1155000	1287000	1426000	1572000	1805000
9000	690000	800000	918000	1111000	1323000	1474000	1633000	1800000	2070000
10000	779000	903000	1037000	1254000	1493000	1663000	1843000	2030000	2330000

Copyright National Electrical Manufacturers Association
Provided by IHS under license with NEMA
No reproduction or networking permitted without license from IHS
Not for Resale

MG 1-21.45 Overspeed▲

Salient-pole synchronous motors shall be so constructed that, in an emergency, not to exceed 1 minute, they will withstand without mechanical injury overspeeds above synchronous speed in accordance with the following:

Synchronous Speed, Rpm	Overspeed, Percent of Synchronous Speed
1500 and above	20
1499 and below	25

NEMA Standard 11-15-1951, revised 11-11-1976; 9-15-1983; 9-20-1984.

MG 1-21.46 Operation at Other than Rated Power Factors

A. For an 0.8 power factor motor which is to operate at 1.0 power factor, with normal 0.8 power factor armature current and with field excitation reduced to correspond to that armature current at 1.0 power factor, multiply the rated horsepower and torque values of the motor by the following constants to obtain the horsepower at 1.0 power factor and the torques in terms of the 1.0 power factor horsepower rating:

Horsepower	1.25
Locked-rotor torque	0.8
Pull-in torque	0.8
Pull-out torque (approximate)	0.6

For example, consider a 1000-horsepower 0.8 power factor motor which has a locked-rotor torque of 100 percent, a pull-in torque of 100 percent and a pull-out torque of 200 percent and which is to be operated at 1.0 power factor. In accordance with the foregoing, this motor could be operated at 1250 horsepower, 1.0 power factor, 80 percent locked-rotor torque (based upon 1250 horsepower), 80 percent pull-in torque (based upon 1250 horsepower) and a pull-out torque of approximately 120 percent (based upon 1250 horsepower).

B. For a 1.0 power factor motor which is to operate at 0.8 power factor, with normal 1.0 power factor field excitation and the armature current reduced to correspond to that excitation, multiply the rated horsepower and torque values of the motor by the following constants to obtain the horsepower at 0.8 power factor and the torques in terms of the 0.8 power factor horsepower rating:

Horsepower	0.35
Locked-rotor torque	2.85
Pull-in torque	2.85
Pull-out torque	2.85

For example, consider a 1000-horsepower 1.0 power factor motor which has a locked-rotor torque of 100 percent, a pull-in torque of 100 percent and a pull-out torque of 200 percent and which is to be operated at 0.8 power factor. In accordance with the foregoing, this motor could be operated at 350 horsepower, 0.8 power factor, 285 percent locked-rotor torque (based upon 350 horsepower), 285 percent pull-in torque (based upon 350 horsepower) and a pull-out torque of 570 percent (based upon 350 horsepower).

Authorized Engineering Information 11-17-1949, revised 1-23-1951; 1-21-1964.

▲ Revised.

MG 1-21.47 Variations from Rated Voltage and Rated Frequency

A. RUNNING

Motors shall operate successfully in synchronism, rated exciting current being maintained, under running conditions at rated load with a variation in the voltage or the frequency up to the following:

1. Plus or minus 10 percent of rated voltage, with rated frequency
2. Plus or minus 5 percent of rated frequency, with rated voltage.
3. A combined variation in voltage and frequency of 10 percent (sum of absolute values) of the rated values, provided the frequency variation does not exceed plus or minus 5 percent of rated frequency.

Performance within these voltage and frequency variations will not necessarily be in accordance with the standards established for operation at rated voltage and frequency.

NEMA Standard 10-29-1937, revised 3-14-1963; 11-12-1970; 1-29-1981.

B. STARTING

The limiting values of voltage and frequency under which a motor will successfully start and synchronize depend upon the margin between the locked-rotor and pull-in torques of the motor at rated voltage and frequency and the corresponding requirements of the load under starting conditions. Since the locked-rotor and pull-in torques of a motor are approximately proportional to the square of the voltage and inversely proportional to the square of the frequency, it is generally desirable to determine what voltage and frequency variations will actually occur at each installation, taking into account any voltage drop resulting from the starting current drawn by the motor. This information and the torque requirements of the driven machine determine the values of locked-rotor and pull-in torque at rated voltage and frequency that are adequate for the application.

Authorized Engineering Information 3-14-1963, revised 7-16-1969; 11-12-1970; 1-29-1981.

MG 1-21.47a Operation of Synchronous Motors from Variable-Frequency Power Supplies, or Both

Synchronous motors to be operated from solid-state or other types of variable-frequency power supplies for adjustable-speed-drive applications may require individual consideration to provide satisfactory performance. Especially for operation below rated speed, it may be necessary to reduce the motor torque load below the rated full load torque to avoid overheating the motor. The motor manufacturer should be consulted before selecting a motor for such applications.

Authorized Engineering Information 1-29-1981.

Copyright National Electrical Manufacturers Association
Provided by IHS under license with NEMA
No reproduction or networking permitted without license from IHS
Not for Resale

MG 1-21.48 Specification Form for Slip-ring Synchronous Motors

The specification form for listing performance data on synchronous motors with slip rings shall be as follows:

Date_____

SLIP-RING SYNCHRONOUS MOTOR RATING

Hp (Output)	Power Factor	kVA	Rpm	Number of Poles	Phase	Hertz	Volts	Amperes (Approx)	Frame

Description:

Hp (Output)	Temperature Rise Guarantees Temperature Rise (Degrees C) Not to Exceed			Excitation Requirements (Maximum)	
	Armature Winding		Field Winding		
	Resistance	Embedded Temperature Detector	Resistance	kW	Exciter Rated Voltage

Rating and temperature rise are based on cooling air not exceeding 40°C and altitude not exceeding 3300 feet (1000 meters). High-potential tests in accordance with standards of the American National Standards Institute (ANSI C50.10).

Torque and kVA (Expressed in Terms of Above Full-load Rating with 100 Percent Voltage Applied)

Locked Rotor Code Letter	Percent Locked-rotor kVA	Percent Locked-rotor Torque	Pull-in Torque		Percent Pull-out Torque Sustained for 1 Minute With Rated Load Excitation
			Percent Torque	Maximum Load Wk^2-lb.ft^2	

If started on reduced voltage, the starting torque of the motor will be reduced approximately in proportion to the square of the reduced voltage applied.

Minimum Efficiencies						
Hp (Output)	Power Factor		Full Load	¾ Load	½ Load	

Approximate Weight, Pounds			
Total Net	Rotor Net	Heaviest Part for Crane Net	Total Shipping

Efficiencies are determined by including I^2R losses of armature and field windings at _____° C, core losses, stray load losses, and friction and windage losses.* Exciter loss is included if supplied with and driven from shaft of machine. Field rheostat losses are not included.

*1. In the case of a motor furnished with a thrust bearing, only that portion of the thrust bearing loss produced by the motor itself is included in the efficiency calculation.
2. In the case of a motor furnished with less than a full set of bearings, friction and windage losses representative of the actual installation are included as determined by (a) calculation or (b) experience with shop test bearings.

NEMA Standard 10-29-1943, revised 11-12-1970.

Copyright National Electrical Manufacturers Association
Provided by IHS under license with NEMA
No reproduction or networking permitted without license from IHS Not for Resale

9009279 0003886 519

MG 1-21.49 Specification Form for Brushless Synchronous Motors

The specification form for listing performance data on brushless synchronous motors shall be as follows:

Date_____

BRUSHLESS SYNCHRONOUS MOTOR RATING

Hp (Output)	Power Factor	kVA	Rpm	Number of Poles	Phase	Hertz	Volts	Amperes (Approx.)	Frame

Description:

Hp (Output)	Temperature Rise Guarantees Temperature Rise (Degrees C) Not to Exceed			Field Windings	Excitation Requirements* (2) (Maximum)	
		Armature Windings				
		Resistance	Embedded Temperature Detector	Resistance	Watts	Exciter Rated Field Voltage
	Motor					
	Exciter* (1)					

* For rotating transformer give (1) data for equivalent winding temperatures and (2) input kVA and voltage instead of excitation for exciter.

Rating and temperature rise are based on cooling air not exceeding 40°C and altitude not exceeding 3300 feet (1000 meters). High-potential tests in accordance with standards of the American National Standards Institute (ANSI C50.10).

Torque and kVA (Expressed in Terms of Above Full-load Rating with 100 Percent Voltage Applied)

Locked Rotor Code Letter	Percent Locked-rotor kVA	Percent Locked-rotor Torque	Pull-in Torque		Percent Pull-out Torque Sustained for 1 Minute with Rated Load Excitation
			Percent Torque	Maximum Load Wk^2-lb.ft^2	

If started on reduced voltage, the starting torque of the motor will be reduced approximately in proportion to the square of the reduced voltage applied.

Minimum Efficiencies						
Hp (Output)	Power Factor		Full Load	¾ Load	½ Load	

Approximate Weight, Pounds			
Total Net	Rotor Net	Heaviest Part for Crane Net	Total Shipping

Efficiencies are determined by including I^2R losses of motor and exciter armature and field windings at _____°C, motor and exciter core losses, stray load losses, and friction and windage losses†. Field rheostat losses are not included. When furnished with rotating transformer, replace exciter losses with equivalent transformer losses.

†1. In the case of a motor furnished with a thrust bearing, only that portion of the thrust bearing loss produced by the motor itself is included in the efficiency calculations.

2. In the case of a motor furnished with less than a full set of bearings, friction and windage losses representative of the actual installation are included as determined by (a) calculation or (b) experience with shop test bearings.

NEMA Standard 10-29-1943, revised 11-12-1970.

Copyright National Electrical Manufacturers Association
Provided by IHS under license with NEMA
No reproduction or networking permitted without license from IHS
Not for Resale

9009279 0003887 455

MG 1-21.50 Routine Tests

A. Motors Not Completely Assembled in the Factory

The following tests shall be made on all motors which are not completely assembled in the factory, including those furnished without a shaft and/or a complete set of bearings:

1. Resistance of armature and field windings.
2. Polarity of field coils.
3. High-potential test in accordance with MG 1-21.51.

B. Motors Completely Assembled in the Factory

The following tests shall be made on motors which are completely assembled in the factory and furnished with a shaft and a complete set of bearings:

1. Resistance of armature and field windings.
2. Check no-load field current at normal voltage and frequency.*
3. High-potential test in accordance with MG 1-21.51.

* On motors having brushless excitation systems, check instead the exciter field current at no-load with normal voltage and frequency on the motor.

Recommended Standard 10-29-1943, revised 6-24-1949, NEMA Standard 11-12-1953, revised 9-23-1964, 5-17-1971.

MG 1-21.51 High-potential Tests

A. Safety Precautions and Test Procedure

See MG 1-3.01.

B. Test Voltage—Armature Windings

The test voltage for all motors shall be an alternating voltage whose effective value is 1000 volts plus twice the rated voltage of the machine.*

C. Test Voltage—Field Windings, Motors With Slip Rings

The test voltage for all motors with slip rings shall be an alternating voltage whose effective value is as follows:

1. Motor to be started with its field short-circuited or closed through an exciting armature; 10 times rated excitation voltage but in no case less than 2500 volts nor more than 5000 volts.
2. Motor to be started with a resistor in series with the field winding; twice the rms value of the IR drop across the resistor but in no case less than 2500 volts, the IR drop being taken as the product of the resistance and the current which would circulate in the field winding if short-circuited on itself at the specified starting voltage.

D. Test Voltage—Assembled Brushless Motor Field Winding and Exciter Armature Winding

The test voltage for all assembled brushless motor field windings and exciter armature windings shall be an alternating voltage whose effective value is as follows:

1. Rated excitation voltage $\leq$ 350 volts dc; 10 times the rated excitation voltage but in no case less than 1500 volts.
2. Rated excitation voltage $>$ 350 volts dc; 2800 volts plus twice the rated excitation voltage.
3. Alternatively, the brushless exciter rotor (armature) may be tested at 1000 volts plus twice the rated nonrectified ac voltage but in no case less than 1500 volts.

NOTE—The brushless circuit components (diodes, thyristors, etc.) on an assembled brushless exciter and synchronous machine field winding shall be short-circuited (not grounded) during the test.

E. Test Voltage—Brushless Exciter Field Winding

The test voltage for all brushless exciter field windings shall be an alternating voltage whose effective value is as follows:

1. Rated excitation voltage $\leq$ 350 volts dc; 10 times the rated excitation voltage but in no case less than 1500 volts.
2. Rated excitation voltage $>$ 350 volts dc; 2800 volts plus twice the rated excitation voltage.
3. Exciters with ac excited stators (fields) shall be tested at 1000 volts plus twice the ac rated voltage of the stator.

Authorized Engineering Information 11-15-1962; revised 7-16-1969; 5-17-1971; 1-5-1977, NEMA Standard 7-13-1977.

* A direct instead of an alternating voltage is sometimes used for high-potential tests on primary windings of machines rated 6000 volts or higher. In such cases, a test voltage equal to 1.7 times the alternating-current test voltage (effective value) as given in the preceding paragraphs is recommended. Following a direct-voltage high-potential test, the tested winding should be thoroughly grounded. The insulation rating of the winding and the test level of the voltage applied determine the period of time required to dissipate the charge and, in many cases, the ground must be maintained for several hours to dissipate the charge to avoid hazard to personnel.

Authorized Engineering Information 11-15-1962; revised 7-16-1969; 5-17-1971; 1-5-1977.

MG 1-21.52 Machine Noise

See MG 1-20.49

MG 1-21.53 Balance of Machines

The balance for salient-pole synchronous motors covered by this Part 21, when measured in accordance with MG 1-20.53, shall not exceed the following:

Speed, Rpm	Maximum Amplitude, Inches, Peak to Peak
3000 and above	0.001
1500–2999, incl.	0.002
1000–1499, incl.	0.0025
999 and below	0.003

NEMA Standard 7-16-1969.

Copyright National Electrical Manufacturers Association
Provided by IHS under license with NEMA
No reproduction or networking permitted without license from IHS
Not for Resale

9009279 0003888 391

MANUFACTURING

MG 1-21.60 Tolerance Limits in Dimensions

The dimensions from the shaft center to the bottom of the feet shall be not greater than the nominal dimensions shown on the manufacturer's dimension sheet. When the motor is coupled or geared to the driven machines, shims are usually required to secure accurate alignment.

Recommended Standard 1-22-1931, NEMA Standard 11-12-1953, revised 9-19-1962.

MG 1-21.61 Nameplate Marking

The following minimum amount of information shall be given on all nameplates. For abbreviations, see MG 1-1.80.

1. Manufacturer's name and serial number or other suitable identification.
2. Horsepower output.
3. Time rating.
4. Temperature rise.*
5. Rpm at full load.
6. Frequency.
7. Number of phases.
8. Voltage.
9. Rated amperes per terminal.
10. Rated field current.†
11. Rated excitation voltage.†
12. Rated power factor.
13. Code letter (see MG 1-10.36).

* As an alternate marking, this item may be replaced by the following:

1. Maximum ambient temperature for which the motor is designed (see MG 1-21.40, Note III).
2. Insulation system designation (if armature and field use different classes of insulation systems, both insulation systems shall be given, that for the armature being given first).

† Applies to exciter in case of brushless machine.

NEMA Standard 10-29-1943, revised 9-19-1962; 11-21-1968; 11-12-1970.

MG 1-21.62 Motor Terminal Housings and Boxes ▲

A. When motors covered by this Part 21 are provided with terminal housings for line cable connections*, the minimum dimension and usable volume shall be as indicated in Table 21-6 for Type I terminal housings or Figure 21-1 for Type II terminal housings.

Unless otherwise specified, when motors are provided with terminal housings, a Type I terminal housing shall be supplied.

Table 21-6
TYPE I BOX
UNSUPPORTED AND INSULATED TERMINATIONS

Voltage	Maximum Full-Load Current	Minimum Usable Volume, Cubic Inches	Minimum Dimension, Inches	Minimum Centerline Distance** Inches	Typical Maximum Horsepower	Typical Maximum Horsepower	
						1.0 Power Factor	0.8 Power Factor
460	400	600	7	. . .	300	400	300
	600	1100	8	. . .	500	600	500
	900	2000	8	. . .	700	900	700
	1200	3200	10	. . .	1000	1250	1000
2300	160	180	5	. . .	600	800	600
	250	330	6	. . .	1000	1250	1000
	400	600	7	. . .	1750	2000	1750
	600	1100	8	. . .	2500	3000	2500
	900	2000	8	. . .	4000	4500	4000
4000	160	2000	8	12.5	1000	1250	1000
	700	5600	14	16	5000	6000	5000
	1000	8000	16	20	7000	8000	7000
6600	260	5600	14	16	3000	3500	3000
	680	8000	16	20	8000	10000	8000

*Terminal housings containing surge capacitors, surge arresters, current transformers, or potential transformers require individual consideration.
**Minimun distance from the entrance plate for conduit entrance to the centerline of motor leads.

▲ Revised.

Copyright National Electrical Manufacturers Association
Provided by IHS under license with NEMA
No reproduction or networking permitted without license from IHS
Not for Resale

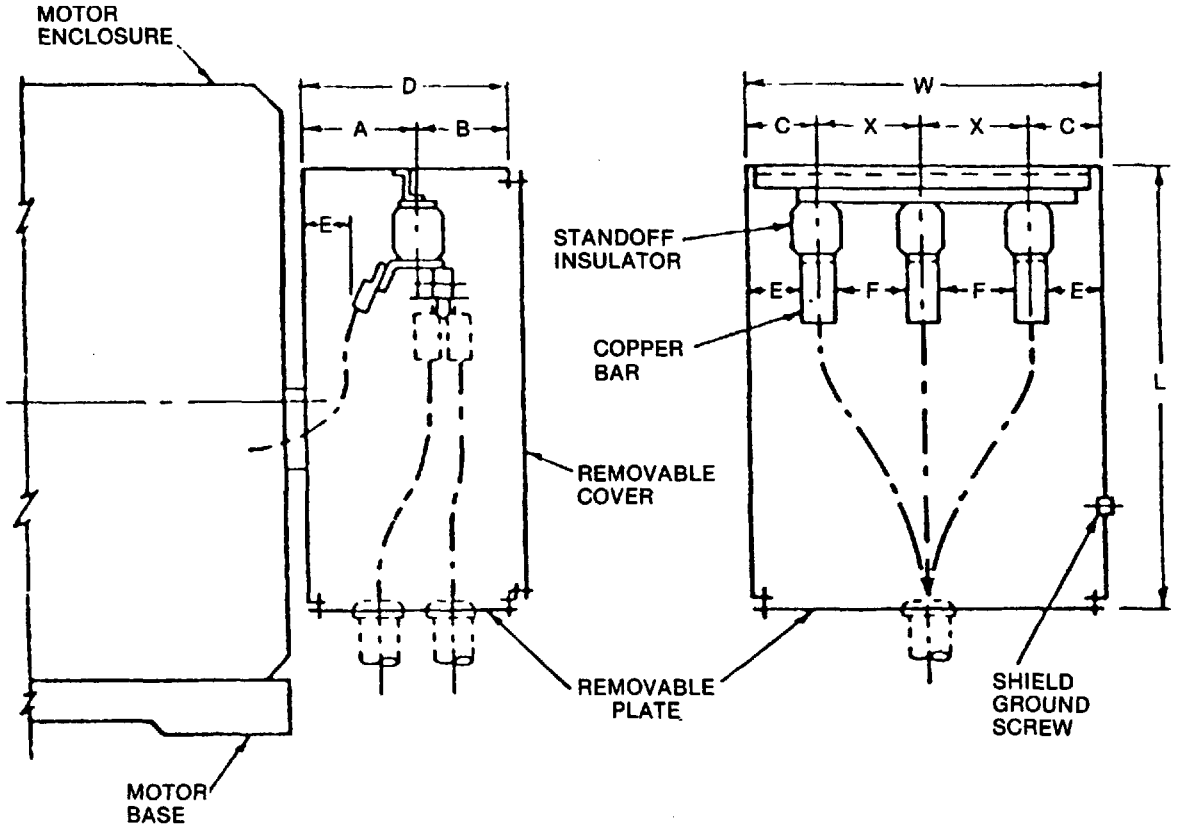

Motor Voltage	Minimum Dimensions (inches)								
	L	W	D	A	B	C	X	E	F
4600- 575	24	18	18	9-1/2	8-1/2	4	5	2-1/2	4
2300-4000	26	27	18	9-1/2	8-1/2	5-1/2	8	3-1/2	5
6600	36	30	18	9-1/2	8-1/2	6	9	4	6
13200	48	42	25	13-1/2	11-1/2	8-1/2	13-1/2	6-3/4	9-1/2

Fig. 21-1

Type II Motor Terminal Housing Standoff-Insulator-Supported Insulated or Uninsulated Terminations

B. For motors rated 601 volts and higher, accessory leads shall terminate in a terminal box or boxes separate from the motor terminal housing. As an exception, current and potential transformers located in the motor terminal housing shall be permitted to have their secondary connections terminated in the motor terminal housing if separated from the motor leads by a suitable physical barrier.

C. For motors rated 601 volts and higher, the termination of leads of accessory items normally operating at a voltage of 50 volts (rms) or less shall be separated from leads of higher voltage by a suitable physical barrier to prevent accidental contact or terminated in a separate box.

NEMA Standard 11-12-1970, revised 1-14-1975; 11-3-1983; 11-15-1984.

MG 1-21.63 Embedded Detectors

See MG 1-20.63.

▲ Revised.

Copyright National Electrical Manufacturers Association
Provided by IHS under license with NEMA
No reproduction or networking permitted without license from IHS
Not for Resale

9009279 0003890 T4T

APPLICATION DATA

MG 1-21.80 Service Conditions

A. General

Motors should be properly selected with respect to their service conditions, usual or unusual, both of which involve the environmental conditions to which the machine is subjected and the operating conditions. Machines conforming to Part 21 of this publication are designed for operation in accordance with their ratings under usual service conditions. Some machines may also be capable of operating in accordance with their ratings under one or more unusual service conditions. Definite-purpose or special-purpose machines may be required for some unusual conditions.

Service conditions, other than those specified as usual, may involve some degree of hazard. The additional hazard depends upon the degree of departure from usual operating conditions and the severity of the environment to which the machine is exposed. The additional hazard results from such things as overheating, mechanical failure, abnormal deterioration of the insulation system, corrosion, fire and explosion.

Although past experience of the user may often be the best guide, the manufacturer of the driven equipment and the motor manufacturer should be consulted for further information regarding any unusual service conditions which increase the mechanical or thermal duty on the machine and, as a result, increase the chances for failure and consequent hazard. This further information should be considered by the user, his consultants, or others most familiar with the details of the application involved when making the final decision.

B. Usual Service Conditions

1. An ambient temperature in the range of 0°C to 40°C or, when water cooling is used, in the range of 10°C to 40°C.
2. An altitude not exceeding 3300 feet (1000 meters).
3. A location and supplementary enclosures, if any, such that there is no serious interference with the ventilation of the motor.

C. Unusual Service Conditions

The manufacturer should be consulted if any unusual service conditions exist which may affect the construction or operation of the motor. Among such conditions are:

1. Exposure to:
   a. Combustible, explosive, abrasive or conducting dusts.
   b. Lint or very dirty operating conditions where the accumulation of dirt will interfere with normal ventilation.
   c. Chemical fumes, flammable or explosive gases.
   d. Nuclear radiation.
   e. Steam, salt-laden air, or oil vapor.
   f. Damp or very dry locations, radiant heat, vermin infestation, or atmospheres conducive to the growth of fungus.
   g. Abnormal shock, vibration, or mechanical loading from external sources.
   h. Abnormal axial or side thrust imposed on the motor shaft.
2. Operation where:▲
   a. There is excessive departure from rated voltage and/or frequency (see MG 1-21.47).
   b. The deviation factor of the alternating-current supply voltage exceeds 10 percent.
   c. The alternating-current supply voltage is unbalanced by more than 1 percent (see MG 1-21.81).
   d. Low noise levels are required.
3. Operation at speeds other than rated speed (see MG 1-21.47).
4. Operation in a poorly ventilated room, in a pit, or in an inclined position.
5. Operation where subjected to:
   a. Torsional impact loads.
   b. Repetitive abnormal overloads.
   c. Reversing or electric braking.
   d. Frequent starting (see MG 1-21.43).
   e. Out-of-phase bus transfer.

Authorized Engineering Information 11-15-1962, revised 7-15-1970; 1-29-1981; 9-15-1982; 9-20-1984.

MG 1-21.81 Effects of Unbalanced Voltages on the Performance of Polyphase Synchronous Motors▲

When the line voltages applied to a polyphase synchronous motor are not equal, unbalanced currents in the stator windings will result. A small percentage voltage unbalance will result in a much larger percentage current unbalance.

Voltages should be evenly balanced as closely as can be read on a voltmeter. If the voltages are unbalanced, the rated horsepower of polyphase synchronous motors should be multiplied by the factor shown in Fig. 21-2 to reduce the possibility of damage to the motor.* Operation of the motor with more than a 5-percent voltage unbalance is not recommended.

When the derating curve of Fig. 21-2 is applied for operation on unbalanced voltages, the selection and setting of the overload device should take into account the combination of the derating factor applied to the motor and the increase in current resulting from the unbalanced voltages. This is a complex problem involving the variation in motor current as a function of load and voltage

▲ Revised.

Copyright National Electrical Manufacturers Association
Provided by IHS under license with NEMA
No reproduction or networking permitted without license from IHS
Not for Resale

unbalance in addition to the characteristics of the overload device relative to $I_{maximum}$ or $I_{average}$. In the absence of specific information it is recommended that overload devices be selected or adjusted, or both, at the minimum value that does not result in tripping for the derating factor and voltage unbalance that applies. When unbalanced voltages are anticipated, it is recommended that negative sequence current relays be installed or the overload devices be selected so as to be responsive to $I_{maximum}$ in preference to overload devices responsive to $I_{average}$.

EFFECT ON PERFORMANCE

A. TEMPERATURE RISE

The temperature rise of the motor operating at a particular load and percentage voltage unbalance will be greater then for the motor operating under the same conditions with balanced voltages.

B. CURRENTS

The effect of unbalanced voltages on polyphase synchronous motors is equivalent to the introduction of a "negative sequence voltage" having a rotation opposite to that occuring with balanced voltages. This negative sequence voltage produces an air gap flux rotating against the rotation of the rotor, tending to produce high currents. A small negative sequence voltage may produce significant continuous current in the amortisseur (cage) winding, which normally carries little or no current when the motor is running in synchronism, along with slightly higher current in the stator winding.

The negative sequence current at normal operating speed with unbalanced voltages may be in the order of 4 to 10 times the voltage unbalance.

The locked rotor current will be unbalanced to the same degree that the voltages are unbalanced but the locked rotor kVA will increase only slightly.

C. TORQUES

The locked rotor torque, pull-in torque and pull-out torque are decreased when the voltage is unbalanced. If the voltage unbalance should be extremely severe, the torques might not be adequate for the application.

UNBALANCE DEFINED

The voltage unbalance in percent may be defined as follows:

$$\text{Percent Voltage Unbalance} = 100 \times \frac{\text{Maximum voltage deviation from average voltage}}{\text{Average voltage}}$$

EXAMPLE—With voltages of 2300, 2220, and 2185 the average is 2235, the maximum deviation from the average is 65, and the percent unbalance $= 100 \times \frac{65}{2235} = 2.9$ percent.

Authorized Engineering Information 9-15-1982, revised 9-20-1984.

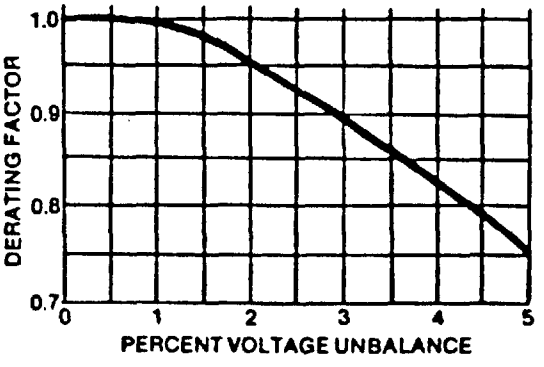

Fig. 21.2

Polyphase Synchronous Motor
Derating Factor Due to Unbalanced Voltage

*The derating factor shown in Fig. 21-2 is applicable only to motors with normal starting torque and normal locked-rotor current, i.e., motors typically intended for service with centrifugal pumps, fans, compressors, and so forth, where the required starting torque is less than 100 percent of rated full-load torque. For motors with other starting torque characteristics, or motors with specified limits on locked-rotor current, the motor manufacturer should be consulted.

MG 1-21.82 Coupling End Play and Rotor Float for Horizontal Motors

See MG 1-20.81.

Copyright National Electrical Manufacturers Association
Provided by IHS under license with NEMA
No reproduction or networking permitted without license from IHS

Not for Resale

9009279 0003892 812

MG 1-21.83 Belt, Chain and Gear Drive

When motors are for belt, chain or gear drive, the motor manufacturer should be consulted.

Authorized Engineering Information 11-13-1952, revised 5-17-1976.

MG 1-21.84 Pulsating Armature Current

When the driven load, such as that of reciprocating-type pumps, compressors, etc., requires a variable torque during each revolution, it is recommended that the combined installation have sufficient inertia in its rotating parts to limit the variations in motor armature current to a value not exceeding 66 percent of full-load current.

NOTE—The basis for determining this variation should be by oscillograph measurement and not by ammeter readings. A line should be drawn on the oscillogram through the consecutive peaks of the current wave. This line is the envelope of the current wave. The variation is the difference between the maximum and minimum ordinates of this envelope. This variation should not exceed 66 percent of the maximum value of the rated full-load current of the motor. (The maximum value of the motor armature current to be assumed as 1.41 times the rated full-load current.)

NEMA Standard 6-13-1923.
Authorized Engineering Information 1-27-1982.

MG 1-21.85 Torque Pulsations During Starting of Synchronous Motors

When operated at other than synchronous speed, all salient-pole synchronous motors develop a pulsating torque superimposed on the average torque. During starting and acceleration (with no field excitation applied), the frequency of the torque pulsations is at any instant equal to the per-unit slip times twice the line frequency. Thus, for a 60-hertz motor, the frequency of the torque pulsation varies from 120 hertz at zero speed to zero hertz at synchronous speed.

Any system consisting of inertias connected by shafting has one or more natural torsional frequencies. During acceleration by a salient-pole synchronous motor, any torsional natural frequency at or below twice line frequency will be transiently excited.

When it is desired to investigate the magnitudes of the torques which are transiently imposed upon the shafting during starting, the instantaneous torque pulsations should be considered in addition to the average torque.

Authorized Engineering Information 3-17-1971.

MG 1-21.85.a Bus Transfer or Reclosing ●

A synchronous motor is inherently capable of developing transient torque and current considerably in excess of rated when exposed to an out-of-phase bus transfer or momentary voltage interruption and reclosing on the same bus. The magnitude of this transient may range from 2 to 20 times rated and is a function of the machine, operating conditions, switching times, system inertia, and so forth.

Safe transfer of a synchronous motor to an alternate power supply, or reclosure on the same bus, involves 3 considerations:

1. Resultant volts per hertz impressed on the motor
2. Motor stability
3. Field removal.

To limit the possibility of damaging the motor or driven equipment, or both, the system should be designed so that the resultant vectorial volts per hertz between the motor residual volts per hertz and the incoming source volts per hertz at the instant the transfer or reclosing is completed does not exceed 1.33 per unit volts per hertz on the motor rated voltage and frequency bases (see Fig. 21-3).

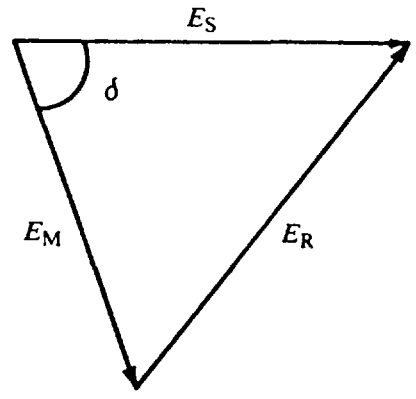

$$E_R = \sqrt{E_S^2 + E_M^2 - 2E_S E_M \cos\delta}$$

Where

E_S = System equivalent volts per hertz
= System voltage in per unit of motor rated voltage divided by system frequency in per unit of rated frequency

E_M = Motor residual flux expressed as equivalent volts per hertz
= Motor terminal voltage in per unit of motor rated voltage divided by motor speed in per unit of synchronous speed

E_R = Resultant vectorial flux expressed as equivalent volts per hertz (per unit on the motor rated voltage and frequency base)

Figure 21-3

Determination of Resultant Volts per Hertz on Bus Transfer or Reclosing

●Added.

Copyright National Electrical Manufacturers Association
Provided by IHS under license with NEMA
No reproduction or networking permitted without license from IHS
Not for Resale

9009279 0003893 759

In addition to the volts per hertz limitation, if a fast transfer or reclosure (typically between 5 and 10 cycles) is intended, a stability study should be performed to determine if the motor will remain in synchronism and to assist in selecting and setting protective equipment.

For longer transfer times (or should a stability study indicate the motor will not remain in synchronism), the following procedure is recommended:

1. MOTOR WITH SLIP RINGS

Remove the field excitation, reestablish conditions for resynchronizing, and delay transfer or reclosing until the motor residual flux has decayed to 0.33 per unit or less.

2. BRUSHLESS MOTOR

Remove the exciter field excitation, reestablish conditions for resynchronizing, and delay transfer or reclosing until the motor residual flux has decayed to 0.33 per unit or less.

The determination of safe transfer or reclosure time requires extensive knowledge of the mechanical and electrical characteristics of the motor and load system and calculations by knowledgeable personnel.

Authorized Engineering Information 9-15-1983.

Copyright National Electrical Manufacturers Association
Provided by IHS under license with NEMA
No reproduction or networking permitted without license from IHS Not for Resale

9009279 0003894 695

MG 1-21.86 Calculation of Natural Frequency of Synchronous Machines Direct Connected to Reciprocating Machinery

A. The undamped natural frequency of oscillation of a synchronous machine connected to an infinite system is:

$$f_n = \frac{35200}{n}\sqrt{\frac{P_r \times f}{Wk^2}}$$

where

f_n = natural frequency in cycles per minute.
n = synchronous speed in revolutions per minute.
P_r = synchronizing torque coefficient (see par. B).
f = frequency of power supply in hertz.
W = weight of all rotating parts in pounds.
k = radius of gyration of rotating parts in feet.

B. When a pulsating torque is applied to its shaft, the synchronous machine rotor will oscillate about its average angular position in the rotating magnetic field produced by the currents in the stator. As a result of this oscillation, a pulsating torque will be developed at the air gap, a component of which is proportional to the angular displacement of the rotor from its average position. The proportionality factor is the synchronizing torque coefficient, P_r. It is expressed in kilowatts, at synchronous speed. per electrical radian.

C. The value of P_r for a given machine is dependent upon (1) the voltage and frequency of the power system, (2) the magnitude of the applied load, (3) the operating power factor, (4) the power system impedance and (5) the frequency of the torque pulsations. It is recommended that, unless other conditions are specified, the value of P_r submitted be that corresponding to operation at rated voltage, frequency, load and power factor, with negligible system impedance and a pulsation frequency, in cycles per minute, equal to the rpm for synchronous motors and equal to one-half the rpm for synchronous generators.

Recommended Standard 10-29-1943, Authorized Engineering Information 11-12-1953, revised 11-15-1962.

MG 1-21.87 Typical Torque Requirements

Typical torque requirements for various synchronous motor applications are listed in the following table. In individual cases, lower values may be adequate or higher values may be required depending upon the design of the particular machine and its operating conditions.

When using the table, the following should be noted:

1. The locked-rotor and pull-in torque values listed are based upon rated voltage being maintained at the motor terminals during the starting period. If the voltage applied to the motor is less than the rated voltage because of a drop in line voltage or the use of reduced-voltage starting, the locked-rotor and pull-in torque values specified should be appropriately higher than the torque values at rated voltage. Alternatively, the locked-rotor and pull-in torque values listed in the table should be specified together with the voltage at the motor terminals for each torque value.

2. The locked-rotor and pull-in torque values listed in the table are also based upon the selection of a motor whose rating is such that the normal running load does not exceed rated horsepower. If a smaller motor is used, correspondingly higher locked-rotor and pull-in torques may be required.

3. The pull-in torque developed by a synchronous motor is not a fixed value but varies over a wide range depending upon the Wk^2 of its connected load. Hence, to design a motor which will synchronize a particular load, it is necessary to know the Wk^2 of the load as well as the pull-in torque. For the applications listed in the table, the Wk^2 of the load divided by the "Normal Wk^2 of Load" (see MG 1-21.42) will usually fall within the range of the values shown in the last column. Where a rotating member of the driven equipment operates at a speed different from that of the motor, its Wk^2 should be multiplied by the square of the ratio of its speed to the motor speed to obtain the equivalent inertia at the motor shaft.

4. For some applications, torque values are listed for (a) starting with the driven machine unloaded in some manner and (b) starting without unloading of the driven machine. Even though the driven machine is normally unloaded for starting, the higher torque values required for starting under load may be justified since, with suitable control, this will allow automatic resynchronization following pull-out due to a temporary overload or voltage disturbance.

5. The pull-out torque values listed in the table take into account the peak loads typical of the application and include an allowance for usual variations in line voltage. Where severe voltage disturbances are expected and continuity of operation is important, higher values of pull-out torque may be justified.

Copyright National Electrical Manufacturers Association
Provided by IHS under license with NEMA
No reproduction or networking permitted without license from IHS
Not for Resale

9009279 0003895 521

Item No.	Application	Torques in Percent of Motor Full-load Torque			Ratio of Wk^2 of Load to "Normal Wk^2 of Load"
		Locked-rotor	Pull-in	Pull-out	
1	Attrition Mills (for grain processing)—starting unloaded.	100	60	175	3–15
2	Ball Mills (for rock and coal)	140	110	175	2–4
3	Ball Mills (for ore)	150	110	175	1.5–4
4	Banbury Mixers	125	125	250	0.2–1
5	Band Mills	40	40	250	50–110
6	Beaters, Standard	125	100	150	3–15
7	Beaters, Breaker	125	100	200	3–15
8	Blowers, Centrifugal—starting with:				
	a. Inlet or discharge valve closed	30	40–60*	150	3–30
	b. Inlet and discharge valve open	30	100	150	3–30
9	Blowers, Positive Displacement, Rotary—by-passed for starting	30	25	150	3–8
10	Bowl Mills (coal pulverizers)—starting unloaded				
	a. Common motor for mill and exhaust fan	90	80	150	5–15
	b. Individual motor for mill	140	50	150	4–10
11	Chippers—starting empty	60	50	250	10–100
12	Compressors, Centrifugal—starting with:				
	a. Inlet or discharge valve closed	30	40–60*	150	3–30
	b. Inlet and discharge valve open	30	100	150	3–30
13	Compressors, Fuller Company				
	a. Starting unloaded (by-pass open)	60	60	150	0.5–2
	b. Starting loaded (by-pass closed)	60	100	150	0.5–2
14	Compressors, Nash-Hytor—starting unloaded	40	60	150	2–4
15	Compressors, Reciprocating—starting unloaded				
	a. Air and gas	30	25	150	0.2–15
	b. Ammonia (discharge pressure 100–250 psi)	30	25	150	0.2–15
	c. Freon	30	40	150	0.2–15
16	Crushers, Bradley-Hercules—starting unloaded	100	100	250	2–4
17	Crushers, Cone—starting unloaded	100	100	250	1–2
18	Crushers, Gyratory—starting unloaded	100	100	250	1–2
19	Crushers, Jaw—starting unloaded	150	100	250	10–50
20	Crushers, Roll—starting unloaded	150	100	250	2–3
21	Defibrators (see beaters, standard)				
22	Disintegrators, Pulp (see beaters, standard)				
23	Edgers	40	40	250	5–10
24	Fans, Centrifugal (except sintering fans)—starting with:				
	a. Inlet or discharge valve closed	30	40–60*	150	5–60
	b. Inlet and discharge valve open	30	100	150	5–60
25	Fans, Centrifugal Sintering—starting with inlet gates closed	40	100	150	5–60
26	Fans, Propeller Type—starting with discharge valve open	30	100	150	5–60
27	Generators, Alternating Current	20	10	150	2–15
28	Generators, Direct Current (except electroplating)				
	a. 150 kW and smaller	20	10	150	2–3
	b. Over 150 kW	20	10	200	2–3
29	Generators, Electroplating	20	10	150	2–3
30	Grinders, Pulp, Single, Long Magazine-type—starting unloaded	50	40	150	2–5
31	Grinders, Pulp, All Except Single, Long Magazine-type—starting unloaded	40	30	150	1–5

See Page 21 for notes applying to this table.

(*Continued*)

Copyright National Electrical Manufacturers Association
Provided by IHS under license with NEMA
No reproduction or networking permitted without license from IHS
Not for Resale

9009279 0003896 468

(*Continued*)

Item No.	Application	Torques in Percent of Motor Full-load Torque: Locked-rotor	Pull-in	Pull-out	Ratio of Wk^2 of Load to "Normal Wk^2 of Load"
32	Hammer Mills—starting unloaded	100	80	250	30–60
33	Hydrapulpers, Continuous Type	125	125	150	5–15
34	Jordans (see refiners, conical)				
35	Line Shafts, Flour Mill	175	100	150	5–15
36	Line Shafts, Rubber Mill	125	110	225	0.5–1
37	Plasticators	125	125	250	0.5–1
38	Pulverizers, B&W—starting unloaded				
	a. Common motor for mill and exhaust fan	105	100	175	20–60
	b. Individual motor for mill	175	100	175	4–10
39	Pumps, Axial Flow, Adjustable Blade—starting with:				
	a. Casing dry	5–40†	15	150	0.2–2
	b. Casing filled, blades feathered	5–40†	40	150	0.2–2
40	Pumps, Axial Flow, Fixed Blade—starting with:				
	a. Casing dry	5–40†	15	150	0.2–2
	b. Casing filled, discharge closed	5–40†	175–250*	150	0.2–2
	c. Casing filled, discharge open	5–40†	100	150	0.2–2
41	Pumps, Centrifugal, Francis Impeller—starting with:				
	a. Casing dry	5–40†	15	150	0.2–2
	b. Casing filled, discharge closed	5–40†	60–80*	150	0.2–2
	c. Casing filled, discharge open	5–40†	100	150	0.2–2
42	Pumps, Centrifugal, Radial Impeller—starting with:				
	a. Casing dry	5–40†	15	150	0.2–2
	b. Casing filled, discharge closed	5–40†	40–60*	150	0.2–2
	c. Casing filled, discharge open	5–40†	100	150	0.2–2
43	Pumps, Mixed Flow—starting with:				
	a. Casing dry	5–40†	15	150	0.2–2
	b. Casing filled, discharge closed	5–40†	80–125	150	0.2–2
	c. Casing filled, discharge open	5–40†	100	150	0.2–2
44	Pumps, Reciprocating—starting with:				
	a. Cylinders dry	40	30	150	0.2–15
	b. By-pass open	40	40	150	0.2–15
	c. No by-pass (three cylinder)	150	100	150	0.2–15
45	Refiners, Conical (Jordans, Hydrafiners, Claflins, Mordens)—starting with plug out	50	50–100**	150	2–20
46	Refiners, Disc Type—starting unloaded	50	50	150	1–20
47	Rod mills (for ore grinding)	160	120	175	1.5–4
48	Rolling Mills				
	a. Structural and rail roughing mills	40	30	300–400‡	0.5–1
	b. Structural and rail finishing mills	40	30	250	0.5–1
	c. Plate mills	40	30	300–400‡	0.5–1
	d. Merchant mill trains	60	40	250	0.5–1
	e. Billet, skelp, and sheet bar mills, continuous, with lay-shaft drive	60	40	250	0.5–1
	f. Rod mills, continuous with lay-shaft drive	100	60	250	0.5–1
	g. Hot strip mills, continuous, individual drive roughing stands	50	40	250	0.5–1
	h. Tube piercing and expanding mills	60	40	300–400‡	0.5–1
	i. Tube rolling (plug) mills	60	40	250	0.5–1
	j. Tube reeling mills	60	40	250	0.5–1
	k. Brass and copper roughing mills	50	40	250	0.5–1
	l. Brass and copper finishing mills	150	125	250	0.5–1
49	Rubber Mills, Individual Drive	125	125	250	0.5–1
50	Saws, Band (see band mills)				
51	Saws, Edger (see edgers)				
52	Saws, Trimmer	40	40	250	5–10
53	Tube Mills (see ball mills)				

See Page 21 for notes applying to this table.

(*Continued*)

Copyright National Electrical Manufacturers Association
Provided by IHS under license with NEMA
No reproduction or networking permitted without license from IHS
Not for Resale

9009279 0003897 3T4

(*Continued*)

Item No.	Application	Torques in Percent of Motor Full-load Torque: Locked-rotor	Pull-in	Pull-out	Ratio of Wk^2 of Load to "Normal Wk^2 of Load"
54	Vacuum Pumps, Hytor				
	a. With unloader	40	30	150	2–4
	b. Without unloader	60	100	150	2–4
55	Vacuum Pumps, Reciprocating—starting unloaded	40	60	150	0.2–15
56	Wood Hogs	60	50	250	30–100

* The pull-in torque varies with the design and operating conditions. The machinery manufacturer should be consulted.
† For horizontal shaft pumps and vertical shaft pumps having no thrust bearing (entire thrust load caried by the motor), the locked-rotor torque required is usually between 5 and 20 percent, while for vertical shaft machines having their own thrust bearing a locked-rotor torque as high as 40 percent is sometimes required.
‡ The pull-out torque varies depending upon the rolling schedule.
** The pull-in torque required varies with the design of the refiner. The machinery manufacturer should be consulted. Furthermore, even though 50 percent pull-in torque is adequate with the plug out, it is sometimes considered desirable to specify 100 percent to cover the possibility that a start will be attempted without complete retraction of the plug.

Recommended Standard 5-20-1938, Authorized Engineering Information 6-24-1949, revised 7-12-1961.

MG 1-21.88 Compressor Factors

The pulsating torque of a reciprocating compressor produces a pulsation in the current which the driving motor draws from the line. To limit this current pulsation to an acceptable value, the proper Wk^2 must be provided in the rotating parts. The table of compressor factors which follows gives data for calculating the amount of Wk^2 required.

In the table are listed a wide variety of compressor applications, each representing a compressor of a certain type together with a set of operating conditions. The application number assigned is for convenient identification. For each application, the table gives a range of values for the compressor factor *(C)* which will limit the current pulsation to 66 percent of motor full-load current (the limit established in MG 1-21.84) and also the range of values which will limit the current pulsation to 40 percent and to 20 percent of motor full-load current. The method of measuring current pulsation is also given in MG 1-21.84.

The values of compressor factor (C) which are required to keep the current pulsation within specified limits are determined by the physical characteristics of the compressor, such as number of cylinders, whether single or double acting, number of stages, crank angle and weight of reciprocating parts, together with the operating conditions, such as kind of gas compressed, suction and discharge pressures, and method of unloading. They are independent of the characteristics of the synchronous motor used to drive the compressor.

The compressor factor which will be provided by a synchronous motor is a function of the total Wk^2 of the rotating parts (motor, compressor and flywheel) and certain motor characteristics as given by the formula:

$$C = \frac{0.746 \times Wk^2 \times (n)^4}{P_r \times f \times 10^8}$$

where W, k, n, P_r and f are as defined in MG 1-21.86.

This means that the total Wk^2 must have a value:

$$Wk^2 = \frac{C \times f \times P_r \times 10^8}{0.746 \times (n)^4}$$

where C is within the range of acceptable values for the compressor application involved.

For most of the compressor applications listed in the table, the compressor factor must be within a single range of values for a given current pulsation. For certain applications, however, two ranges of values are shown. The lower range is commonly referred to as the "loop" since it corresponds to a loop or valley in the curve of current pulsation versus compressor factor for that application.

The motor characteristic, P_r, increases with an increase in line voltage or the excitation current and decreases with a reduction in these operating variables. Since the compressor factor provided by a motor varies inversely with the value of P_r, an increase in line voltage or excitation current will reduce the value of compressor factor provided and vice versa. Hence, if the line voltage or excitation current are expected to depart appreciably from rated values (on which the value of P_r is based), it may be necessary to take this into account by placing narrower limits on the range of values for the compressor factor than those shown in the table. This is particularly important if the Wk^2 selected gives a compressor factor in the "loop" since then either an increase or a decrease in the compressor factor may increase the current pulsation.

The compressor factors in the table were calculated for typical values of the physical characteristics for each type of compressor and, therefore, a compressor factor within the range of values shown will, in most cases, limit the current pulsation to the value indicated. Particular cases will, however, occur where a compressor and its operating conditions correspond to one of the applications listed, and yet a compressor factor within a narrower range must be provided to limit the current pulsation to the value indicated because the compressor characteristics differ significantly from those assumed.

NEMA Standard 10-27-1944, revised 11-12-1953, Authorized Engineering Information 9-19-1962.

Copyright National Electrical Manufacturers Association
Provided by IHS under license with NEMA
No reproduction or networking permitted without license from IHS
Not for Resale

Copyright National Electrical Manufacturers Association
Provided by IHS under license with NEMA
No reproduction or networking permitted without license from IHS
Not for Resale

9009279 0003898 230

Application No.	Application (description)	Compressor Factor C 66% Pulsation	40% Pulsation	20% Pulsation
	AMMONIA OR FREON—HORIZONTAL—SINGLE-STAGE—EQUAL SUCTION (Discharge Pressure 100–250 psi)			
1	One-cylinder, double-acting, single-stage.	14.0 and over	20.0 and over	28.0 and over
3	One-cylinder, HDA ammonia or freon compressor half load by using clearance pocket on head end.	28.0 and over	40.0 and over	72.0 and over
5	Two-cylinder, double-acting, single-stage, 90 degree cranks for duplex operation only.	2.0 to 6.0 or 12.0 and over	3.5 to 4.5 or 14.0 and over	20.0 and over
7	Two-cylinder, double-acting, single-stage, 90 degree cranks for single cylinder operation, with one crank disconnected. (When both cranks are connected and both cylinders are operating normally, this becomes equivalent to Application 5 and the current variation will generally be less and will never exceed the values given for Application 7.)	12.0 and over	14.0 and over	20.0 and over
9	Two-cylinder, double-acting, single-stage, 90 degree cranks for duplex operation with clearance pockets on all cylinder ends, balanced operation at all loads.	2.0 to 6.0 or 12.0 and over	3.5 to 4.5 or 14.0 and over	20.0 and over
	NOTE—The current variation may be 125 percent if unbalanced operation of clearance pockets is used.			
11	Two-cylinder, double-acting, single-stage, 90 degree cranks, with clearance pockets at one end of each cylinder to completely unload that cylinder end. (Under balanced operation with clearance pockets not in use, this becomes equivalent to Application 5 and the current variation will generally be less and will never exceed the values given for Application 11.)	16.0 and over	21.0 and over	32.5 and over
	AMMONIA OR FREON—HORIZONTAL—TWO-STAGE—EQUAL SUCTION (Discharge Pressure 100–250 psi)			
21	Two-cylinder, double-acting, two-stage, 90 degree cranks—no partial capacity operation.	13.0 and over	16.0 and over	23.0 and over
23	Two-cylinder, double-acting, two-stage, 90 degree cranks for duplex operation with clearance pockets on all cylinder ends and with balanced operation at all loads.	13.0 and over	16.0 and over	23.0 and over
25	Two-cylinder, double-acting, two-stage, 90 degree cranks, with clearance pockets at one end of each cylinder to completely unload that cylinder end. (Under balanced operation with clearance pockets not in use, this becomes equivalent to Application 21 and the current variation will generally be less and will never exceed the values given for Application 25.)	17.0 and over	23.0 and over	35.5 and over

Copyright National Electrical Manufacturers Association
Provided by IHS under license with NEMA
No reproduction or networking permitted without license from IHS
Not for Resale

9009279 0003899 177

Application No.	Application (description)	Compressor Factor C 66% Pulsation	40% Pulsation	20% Pulsation
	AMMONIA OR FREON—VERTICAL—SINGLE-STAGE—EQUAL SUCTION (Discharge Pressure 100–250 psi)			
41	Two-cylinder, vertical, single-acting, single-stage, 180 degree cranks. The value of compressor factor C to use depends upon the weight of reciprocating parts as determined by factor called "Q." $$Q = \frac{0.065 \times W \times R^2 \times (S/100)^2}{I.\ Hp.}$$ Where W = Weight of reciprocating parts per cylinder. R = Crank radius, in feet. S = Revolutions per minute. I. Hp. = Indicated horsepower of both cylinders, total.			
	For values of Q of 0.2 to 0.4	9.5 or over	14.5 and over	26.0 and over
	For values of Q of 0.4 to 0.6	8.5 or over	13.0 and over	23.0 and over
	For values of Q of 0.6 to 0.8	7.5 or over	11.0 and over	19.5 and over
	For values of Q of 0.8 to 1.0	6.5 or over	9.5 and over	16.5 and over
	For values of Q of 1.0 to 1.4	5.7 or over	8.0 and over	14.0 and over
43	Two-cylinder, vertical, single-acting, cranks at 180°, with by-passes at ⅓ or ½ of piston stroke, to reduce capacity. By-passes always opened together for balanced operation.	9 and over	13.5 and over	25.0 and over
45	Two-cylinder, vertical, single-acting, cranks at 180°, single-stage. Half load by closing inlet valve on one cylinder.	40 and over	60.0 and over	111.0 and over
47	Twin vertical, two-cylinder, single-acting, single-stage, for twin operation only with cranks of the two compressors set at 90 degrees. (This application consists of two identical independent compressors, each V.D.S.A. with one motor between arranged for driving both compressors.)	2.5 and over	4.0 and over	7.0 and over
49	Twin vertical, two-cylinder, single-acting, single-stage, with cranks of the two compressors set at 90 degrees as in Application 47, except when used for single compressor operation, that is, motor arranged for driving only one compressor. (When both compressors are operating this becomes equivalent to Application 47 and the current variation will generally be less and will never exceed the values given for Application 49.)	6 and over	8.0 and over	15.0 and over
51	Three-cylinder, vertical, single-acting, single-stage, cranks at 120 degrees.	3.5 and over	5.5 and over	9.5 and over
53	Three-cylinder, vertical, single-acting, single-stage, cranks at 120° with by-passes at ⅓ or ½ of piston stroke, to reduce capacity. By-passes always opened together for balanced operation.	3.5 and over	5.5 and over	9.5 and over

Copyright National Electrical Manufacturers Association
Provided by IHS under license with NEMA
No reproduction or networking permitted without license from IHS
Not for Resale

9009279 0003900 719

Application No.	Application (description)	Compressor Factor C 66% Pulsation	40% Pulsation	20% Pulsation
	AMMONIA OR FREON—VERTICAL—SINGLE-STAGE—EQUAL SUCTION (Discharge Pressure 100–250 psi)			
55	Twin, three-cylinder, vertical, single-acting, single-stage for twin operation only with cranks of the two compressors set at 60 degrees. (This application consists of two identical independent compressors, with one motor between arranged for driving both compressors.)	1 and over	2.0 and over	3.5 and over
57	Twin, three-cylinder, vertical, single-acting, single-stage, cranks of the two compressors set at 60 degrees as in Application 55 except when used for single compressor operation, that is, one compressor disconnected. (When both compressors are operating, this becomes equivalent to Application 55, and the current variation will generally be less and will never exceed the values given for Application 57.)	2.5 and over	4.0 and over	6.5 and over
58A	Four-cylinder, vertical, single-acting, cranks at 90 degrees. Operation at full load and no load only.	2.5 and over	4 and over	7 and over
58B	Four-cylinder, vertical, single-acting, cranks at 90 degrees. Capacity reduction by-passes on each cylinder operated together for balanced operation at all loads.	2.5 and over	4 and over	7 and over
58C	Four-cylinder, vertical, single-acting, cranks at 90 degrees with three-step control. Full load—all cylinders working normally. ¾ load—mid-stroke by-pass open on two cylinders whose cranks are 180 degrees apart. ½ load—mid-stroke by-pass open on all cylinders.	6 and over	11 and over	16 and over
58D	Four-cylinder, vertical, single-acting, cranks at 90 degrees with three-step control. Full load—all cylinders working normally. ¾ load—mid-stroke by-pass open on two cylinders whose cranks are 90 degrees apart. ½ load—mid-stroke by-pass open on all cylinders.	20 and over	26 and over	45 and over
58E	Four-cylinder, vertical, single-acting, cranks at 90 degrees with five-step control. Full load—all cylinders working normally. ⅞ load—mid-stroke by-pass open on one cylinder. ¾ load—mid-stroke by-pass open on cylinders whose cranks are 180 degrees apart. ⅝ load—mid-stroke by-pass open on three cylinders. ½ load—mid-stroke by-pass open on all cylinders.	16 and over	20 and over	32 and over

Copyright National Electrical Manufacturers Association
Provided by IHS under license with NEMA
No reproduction or networking permitted without license from IHS
Not for Resale

9009279 0003901 655

Application No.	Application (description)	Compressor Factor C 66% Pulsation	40% Pulsation	20% Pulsation
	AMMONIA OR FREON—VERTICAL—SINGLE-STAGE—EQUAL SUCTION (Discharge Pressure 100–250 psi)			
58F	Four-cylinder, vertical, single-acting, cranks at 90 degrees with five-step control. Full load—all cylinders working normally. 7/8 load—mid-stroke by-pass open on one cylinder. 3/4 load—mid-stroke by-pass open on two cylinders whose cranks are 90 degrees apart. 5/8 load—mid-stroke by-pass open on three cylinders. 1/2 load—mid-stroke by-pass open on all cylinders.	20 and over	26 and over	45 and over
58G	Two-cylinder, vertical, single-acting, cranks at 180 degrees with three-step control. Full load—both cylinders working normally. 3/4 load—mid-stroke by-pass open on one cylinder. 1/2 load—mid-stroke by-pass open on two cylinders.	20 and over	26 and over	42 and over

AMMONIA OR FREON—SPLIT SUCTION—HORIZONTAL—ONE-CYLINDER—DOUBLE-ACTING (Discharge Pressure 100–250 psi)

	Pressures Suction Head-End	Pressures Suction Crank-End	Discharge			
61	5	20	185	23 and over	32.5 and over	55.0 and over
62	0	20	185	28 and over	40.0 and over	72.0 and over
63	20	5	185	26 and over	37.0 and over	65.0 and over
64	20	0	185	30 and over	43.5 and over	78.0 and over

AMMONIA OR FREON—SPLIT SUCTIONS—HORIZONTAL—TWO-CYLINDER—DOUBLE-ACTING—CRANKS AT 90° (Discharge Pressure 100–250 psi)

	Pressures Suction Leading Cylinder		Pressures Suction Lagging Cylinder					
	Head-End	Crank-End	Head-End	Crank-End	Discharge			
81	5	20	20	20	185	16.5 and over	22.0 and over	34.5 and over
82	0	20	20	20	185	19.5 and over	26.5 and over	44.0 and over
83	20	5	20	20	185	19.0 and over	26.0 and over	42.0 and over
84	20	0	20	20	185	22.0 and over	30.5 and over	52.0 and over
85	20	20	5	20	185	14.5 and over	19.0 and over	28.0 and over
86	20	20	0	20	185	17.0 and over	22.5 and over	36.0 and over
87	20	20	20	5	185	17.0 and over	22.5 and over	36.0 and over
88	20	20	20	0	185	20.0 and over	27.5 and over	45.5 and over
89	5	20	5	20	185	18.0 and over	24.0 and over	39.0 and over
90	0	20	0	20	185	21.0 and over	29.0 and over	48.5 and over
91	20	5	20	5	185	21.0 and over	29.0 and over	48.5 and over
92	20	0	20	0	185	23.0 and over	32.0 and over	55.0 and over

Copyright National Electrical Manufacturers Association
Provided by IHS under license with NEMA
No reproduction or networking permitted without license from IHS
Not for Resale

9009279 0003902 591

Application No.	Application (description)	Compressor Factor C 66% Pulsation	40% Pulsation	20% Pulsation
	AMMONIA OR FREON—SPLIT SUCTIONS—VERTICAL—TWO-CYLINDER—SINGLE-ACTING—CRANKS AT 180° (Discharge Pressure 100–250 psi)			
101	5 lbs suction on one cylinder, and 20 lbs suction on the other with 185 lbs discharge on both cylinders.	22.5 and over	31.5 and over	54.0 and over
103	0 lbs suction on one cylinder, and 20 lbs suction on the other cylinder, with 185 lbs discharge on both cylinders.	25.0 and over	35.5 and over	62.0 and over
	AMMONIA OR FREON—SPLIT SUCTIONS—VERTICAL—THREE-CYLINDER—SINGLE-ACTING (Discharge Pressure 100–250 psi)			
121	5 lbs suction on one cylinder, and 20 lbs suction on both of the other two cylinders, with 185 lbs discharge on all cylinders.	16.5 and over	22.0 and over	35.0 and over
123	0 lbs suction on one cylinder, 20 lbs suction on both of the other two cylinders, with 185 lbs discharge on all three cylinders.	19.5 and over	26.5 and over	44.0 and over
	AIR—SINGLE-STAGE (Based on Standard Pressures Not over 160 psi)			
141	Single-cylinder, double-acting, single-stage, two-step control. Full load—both cylinder ends working normally. No-load—all suction valves lifted.	14.5 and over	20.0 and over	30.0 and over
143	Single-cylinder, double-acting, single-stage, suction valve held open at head-end.	40 and over	60.0 and over	111.0 and over
145	Two-cylinder, double-acting, cranks at 90°, two-step control. Full load—all cylinder ends working normally. No-load—operating with all suction valves lifted.	3.0 to 5.5 or 12.5 and over	15.5 and over	21.5 and over
147	Two-cylinder, double-acting, cranks at 90°, three-step control. Full load—all cylinder ends working normally. ½ load—suction valves lifted on both ends of "lagging" cylinder. No-load—suction valves lifted on both ends of both cylinders.	14.0 and over (For worst condition)	19.0 and over	27.0 and over
148	Two-cylinder, double-acting, with three-step control. Cylinders mounted on vertical frame with cranks at 180 degrees. Full load—all cylinder ends working normally. ½ load—suction valves lifted on two crank ends, two head ends working normally. No load—all suction valves lifted.	9.5 and over	14.5 and over	26.0 and over
149	Two-cylinder, double-acting, cranks at 90°, five-step control. Full load—all cylinder ends working normally. ¾ load—suction valves lifted on head-end of "lagging" cylinder. ½ load—suction valves lifted on both ends of "lagging" cylinder. ¼ load—suction valves lifted on both ends of "lagging" cylinder and also head-end of "leading" cylinder. No load—suction valves lifted on both ends of both cylinders.	25.0 and over (For worst condition)	38.0 and over	66.0 and over

Copyright National Electrical Manufacturers Association
Provided by IHS under license with NEMA
No reproduction or networking permitted without license from IHS
Not for Resale

9009279 0003903 428

Application No.	Application (description)	Compressor Factor C 66% Pulsation	40% Pulsation	20% Pulsation
	AIR—SINGLE-STAGE (Based on Standard Pressures Not over 160 psi)—(*Continued*)			
151	Two-cylinder, double-acting, cranks at 90°, with any step unloading by clearance pockets maintaining balanced operation at all loads.	3.0 to 5.5 or 12.5 and over	16.0 and over	21.5 and over
153	Four-cylinder, double-acting, tandem duplex (the two cylinders of each frame operated by a single connecting rod with the cylinders on same side of shaft or on opposite sides with tie rod), with 90 degrees between the cranks on the two frames, with five-step control.			
	Full load—all cylinder ends working normally.			
	¾ load—suction valves lifted on crank-end of one cylinder and head-end of other cylinder on one side.			
	½ load—suction valves lifted on head-end of one cylinder, and crank-end of other cylinder on both sides.			
	¼ load—all suction valves in both cylinders on one side lifted, and suction valves on crank-end of one cylinder and head-end of other cylinder on other side lifted.	4.5 to 6 or 12.5 and over	16.0 and over	21.5 and over
155	Four-cylinder, double-acting, opposed duplex (the two cylinders of each frame on opposite sides of shaft operated by individual connecting rods driven by a single crank), with 90 degrees between the cranks of the two frames, with five-step control.			
	Full load—all cylinder ends working normally.			
	¾ load—suction valves lifted on both head-ends, or both crank-ends, of one opposed frame.			
	½ load—suction valves lifted on all head-ends, or all crank-ends.			
	¼ load—all suction valves lifted on both cylinders of one opposed frame and on both head-ends, or on both crank-ends of the opposed frame.			
	No load—all suction valves lifted.	4.5 and over	6.0 and over	10.0 and over

Copyright National Electrical Manufacturers Association
Provided by IHS under license with NEMA
No reproduction or networking permitted without license from IHS

9009279 0003904 364

Application No.	Application (description)	Compressor Factor C 66% Pulsation	40% Pulsation	20% Pulsation
	AIR—SINGLE-STAGE (Based on Standard Pressures Not over 160 psi)—(*Continued*)			
157	Four-cylinder, double-acting, balanced opposed duplex (the two cylinders of each frame on opposite sides of shaft operated by individual connecting rods and individual cranks 180 degrees apart), with 90 degrees between the cranks of the two frames, with five-step control. Full load—all cylinder ends working normally. ¾ load—suction valves lifted on head-end of one cylinder, crank-end of other cylinder on one opposed frame. ½ load—suction valves lifted on head-end of one cylinder and crank-end of opposed cylinder on each frame. ¼ load—all suction valves lifted on both cylinders of one opposed frame and on head-end of one cylinder and crank-end of the other cylinder on second opposed frame. No load—all suction valves lifted.	4.5 to 5.5 or 12.5 and over	16.0 and over	21.5 and over
	AIR—TWO-STAGE (Based on Standard Pressures Not over 160 psi)			
161	Two-cylinder, double-acting, cranks at 90°, with two-step control. Full load—all cylinder ends working normally. No-load—suction valves lifted on both ends of both cylinders.	4.0 to 5.0 or 13.5 and over	17.5 and over	24.5 and over
163	Two-cylinder, double-acting, cranks at 90°, with three-step control. Full load—all cylinder ends working normally. ½ load—suction valves lifted on end of each cylinder (it makes no difference which end of either cylinder). No-load—all suction valves lifted.	26.0 and over (For worst condition)	37.0 and over	65.0 and over
165	Two-cylinder, double-acting, cranks at 90°, with four-step control. Full load—all cylinder ends working normally. ¾ load—head-end of high pressure cylinder and crank-end of low pressure cylinder on clearance pockets. ½ load—all ends on clearance pockets. No-load—all suction valves lifted.	13.5 and over (For worst condition)	17.5 and over	24.5 and over
167	Two-cylinder, double-acting, cranks at 90°, with any step control. All steps of unloading accomplished by clearance pockets maintaining balanced operation at all loads.	4.0 to 5.0 or 13.5 and over	17.5 and over	24.5 and over

Not for Resale

Copyright National Electrical Manufacturers Association
Provided by IHS under license with NEMA
No reproduction or networking permitted without license from IHS

Application No.	Application (description)	Compressor Factor C 66% Pulsation	40% Pulsation	20% Pulsation
	AIR—TWO-STAGE (Based on Standard Pressures Not over 160 psi)—(*Continued*)			
169	Two-cylinder, double-acting, cranks at 90°, with five-step control. Full load—all cylinder ends working normally. ¾ load—head-end of high pressure cylinder and crank-end of low pressure cylinder on clearance pockets. ½ load—all ends of both cylinders on clearance pockets. ¼ load—suction valves lifted on head-end of high pressure cylinder and crank-end of low pressure cylinder. Opposite ends of cylinders on clearance pockets. No-load—all suction valves lifted.	24.0 and over (For worst condition)	34.0 and over	58.5 and over
171	Two-cylinder, double-acting, cranks at 90°, with five-step control. Full load—all cylinder ends working normally. ¾ load—two head-ends working normally, two crank-ends on clearance pockets. ½ load—suction valves lifted on two head-ends. Two crank-ends working normally. ¼ load—suction valves lifted on two head-ends. Two crank-ends on clearance pockets. No-load—all suction valves lifted.	26.0 and over (For worst condition)	38.0 and over	65.0 and over
173	Three-cylinder (two low pressure cylinders in tandem), double-acting, cranks at 90°, two-stage, with five-step control. Full load—all cylinder ends working normally. ¾ load—suction valves lifted on head-end of one low pressure cylinder. ½ load—suction valves lifted on both ends of one low pressure cylinder, and on crank-end of high pressure cylinder. ¼ load—suction valves lifted on both ends of one low pressure cylinder, one end of other low pressure cylinder, and crank-end of high pressure cylinder. No-load—all suction valves lifted.	17.5 and over (For worst condition)	23.5 and over	37.5 and over

9009279 0003905 270
Not for Resale

Copyright National Electrical Manufacturers Association
Provided by IHS under license with NEMA
No reproduction or networking permitted without license from IHS
Not for Resale

9009279 0003906 137

Application No.	Application (description)	Compressor Factor C 66% Pulsation	40% Pulsation	20% Pulsation
	AIR—TWO-STAGE (Based on Standard Pressures Not over 160 psi)—(*Continued*)			
175	Four-cylinder, double-acting, tandem duplex (one high-pressure cylinder and one low-pressure cylinder on each frame operated by a single connecting rod with the cylinders on same side of shaft, or on opposite sides with a tie rod), with 90 degrees between the cranks of the two frames, with five-step control. Full load—all cylinder ends working normally. ¾ load—suction valves on head-end of low pressure cylinder, and crank-end of high pressure cylinder, on one side lifted. ½ load—suction valves lifted on head-ends of both low pressure cylinders, and on crank-ends of both high pressure cylinders. ¼ load—all suction valves in both cylinders on one side lifted, and suction valves on crank-end of low pressure cylinder and head-end of high pressure cylinder on other side lifted. No-load—all suction valves lifted.	4.5 to 6.0 or 12.5 and over (For worst condition)	16.0 and over	21.5 and over
177	Two-cylinder, double-acting, cranks at 90°, with three-step control. Full load—all cylinder ends working normally. 60 per cent load—head-ends on clearance pockets. No-load—all suction valves lifted.	3.0 to 5.0 or 13.5 and over (For worst condition)	17.5 and over	24.5 and over
179	Two-cylinder, double-acting, single crank cylinders set at 90°, angle compound air compressors, full and no-load only, single crank.	3.5 to 7.0 or 11.5 and over	14.0 and over	19.0 and over
181	Twin two-cylinder, double-acting, angle compound air compressors, 180 degrees apart, twin operation only.	2.0 and over	3.5 and over	5.0 and over
183	Four-cylinder, double-acting, opposed duplex (one high-pressure cylinder and one low-pressure cylinder on each frame on opposite sides of shaft and operated by individual connecting rods driven by a single crank), with 90 degrees between the cranks of the two frames, with five-step control. Full load—all cylinder ends working normally. ¾ load—crank-ends of all cylinders on clearance pockets, all other cylinder ends working normally. ½ load—suction valves lifted on crank-ends all cylinders, all other cylinder ends working normally. ¼ load—suction valves lifted on head-ends all cylinders, the crank-ends of all cylinders on clearance pockets. No-load—all suction valves lifted.	4.5 to 5.5 or 12.5 and over	16.0 and over	21.5 and over

Copyright National Electrical Manufacturers Association
Provided by IHS under license with NEMA
No reproduction or networking permitted without license from IHS
Not for Resale

Application No.	Application (description)	Compressor Factor C 66% Pulsation	40% Pulsation	20% Pulsation
	AIR—TWO-STAGE (Based on Standard Pressures Not over 160 psi)—(*Continued*)			
187	Four-cylinder, double-acting, balanced opposed duplex (one high-pressure cylinder and one low-pressure cylinder on each frame on opposite sides of shaft and operated by individual connecting rods and individual cranks 180 degrees apart), with 90 degrees between the cranks of the two frames, with five-step control. Full load—all cylinder ends working normally. ¾ load—head-end of high pressure cylinder and crank-end of low pressure cylinder on both frames on clearance pockets, all other cylinder ends working normally. ½ load—suction valves lifted on all cylinder ends on one opposed frame, the cylinders of other opposed frames working normally. ¼ load—suction valves lifted on all cylinder ends of one opposed frame, the head-end of high pressure cylinder and crank-end of low pressure cylinder on clearance pockets and opposite ends of same cylinders working normally. No-load—all suction valves lifted.	13.0 and over	16.5 and over	23.0 and over
189	Two-cylinder (cylinders mounted on vertical frame with cranks at 180 degrees), double-acting with three-step control. Full load—both cylinders working normally. ½ load—suction valves lifted on two crank-ends, two head-ends working normally. No-load—all suction valves lifted.	13.0 and over	16.5 and over	23.0 and over
	CO_2 COMPRESSOR BASED ON 300 TO 450 psi SUCTION, AND 900 TO 1500 psi DISCHARGE PRESSURE			
	CO_2—HORIZONTAL—SINGLE-CYLINDER—DOUBLE-ACTING—SINGLE-STAGE			
	Piston Rod Diameter in Percent of Piston Diam.	**Percent Unbalance**		
191	30	4½	18 and over	24.0 and over 39.5 and over
192	40	8	21 and over	28.5 and over 49.0 and over
193	50	12½	25 and over	35.5 and over 62.0 and over
194	60	18	30 and over	43.5 and over 78.0 and over

9009279 0003907 073

Copyright National Electrical Manufacturers Association
Provided by IHS under license with NEMA
No reproduction or networking permitted without license from IHS

9009279 0003908 TOT

Application No.	Application (description)		Compressor Factor C 66% Pulsation	40% Pulsation	20% Pulsation
	CO_2—Horizontal or Vertical—Two-cylinder—Double-acting—Single-stage with Cranks at 90 Degrees				
211	30	2¼	14 and over	18.0 and over	26.0 and over
212	40	4	17 and over	23.0 and over	35.5 and over
213	50	6¼	20 and over	27.0 and over	45.0 and over
214	60	9	23 and over	32.0 and over	55.0 and over
	CO_2—Horizontal—Two-cylinder—Double-acting—Single-stage with Cranks at 180 Degrees				
231	All. (The unbalance of one cylinder is offset by that of the other cylinder.)		8.5 and over	13.5 and over	23.0 and over
	CO_2—Horizontal or Vertical—Two-cylinder—Double-acting—Single-stage				
251	Compressor with 30 percent clearance pockets each head-end, any unloading with cranks at 180 degrees.		17 and over	23.0 and over	36.5 and over
	CO_2—Horizontal or Vertical—Three-cylinder—Double-acting—Single-stage				
271	Compressors without clearance pockets balanced operation.		2.0 and over	3.5 and over	5.0 and over
273	Compressor with 30 percent clearance pockets on each head-end, any unloading.		3.5 to 7.0 or 12.0 and over	14.5 and over	21.0 and over
	CO_2—Vertical—Single-stage—Equal Suction				
291	Two-cylinder, single-acting, with cranks at 180 degrees.		9 and over	14.0 and over	25.0 and over
293	Twin, two-cylinder, single-acting, for twin operation only, cranks of the two compressors set at 90 degrees.		2.5 and over	4.0 and over	7.0 and over
295	Twin, two-cylinder, single-acting with cranks of the two machines set at 90 degrees as in Application 293, except when used for single compressor operation, that is, motor arranged for driving only one compressor. (When both compressors are operating this becomes equivalent to Application 293 and the current variation will generally be less and will never exceed the values given for Application 295.)		6.0 and over	8.0 and over	15.0 and over

Not for Resale

SECTION III

LARGE APPARATUS

Part 22. Synchronous Generators—Salient-pole Type (Exclusive of Generators for Hydraulic-turbine Drive)

The standards in this Part 22 of Section III cover (1) synchronous generators built in frames larger than those required for synchronous generators having the continuous open-type ratings given in the table below and (2) all ratings of synchronous generators of the revolving-field type of 450 rpm and slower speeds.

Synchronous Speed	Generators, Synchronous, Revolving Field Type, kW at 0.8 Power Factor
3600	...
1800	150
1200	150
900	100
720	100
600	75
514	60

Copyright National Electrical Manufacturers Association
Provided by IHS under license with NEMA
No reproduction or networking permitted without license from IHS
Not for Resale

9009279 0003910 668

Part 22
LARGE APPARATUS— SYNCHRONOUS GENERATORS—SALIENT-POLE TYPE (EXCLUSIVE OF GENERATORS FOR HYDRAULIC-TURBINE DRIVE)
RATINGS

MG 1-22.10 Basis of Rating ▲

Synchronous generators shall be rated on a continuous duty basis, and the rating shall be expressed in kilovolt-amperes available at the terminals at 0.8 power factor lagging (overexcited). The corresponding kilowatts should also be stated.

Recommended Standard 1-25-1946. NEMA Standard 11-12-1953, revised 9-17-1981.

MG 1-22.11 Kilovolt-ampere (kVA) and Kilowatt (kW) Ratings

The ratings for 60- and 50-hertz, 0.8 power factor lagging (overexcited), synchronous generators shall be:

kVA	kW	kVA	kW	kVA	kW
1.25	1	250	200	4375	3500
2.5	2	312	250	5000	4000
3.75	3	375	300	5625	4500
6.25	5	438	350	6250	5000
9.4	7.5	500	400	7500	6000
12.5	10	625	500	8750	7000
18.7	15	750	600	10000	8000
25	20	875	700	12500	10000
31.3	25	1000	800	15625	12500
37.5	30	1125	900	18750	15000
50	40	1250	1000	25000	20000
62.5	50	1563	1250	31250	25000
75	60	1875	1500	37500	30000
93.8	75	2188	1750	43750	35000
125	100	2500	2000	50000	40000
156	125	2812	2250	62500	50000
187	150	3125	2500	75000	60000
219	175	3750	3000		

NOTE—It is not practical to build synchronous generators of all kVA ratings at all speeds and for all voltage ratings.

NEMA Standard 5-19-1939, revised 9-19-1962.

MG 1-22.12 Speed Ratings

Number of Poles	Speed, Rpm	
	60 hertz	50 hertz
4	1800	1500
6	1200	1000
8	900	750
10	720	600
12	600	500
14	514	429
16	450	375
18	400	333
20	360	300
22	327	273
24	300	250
26	277	231
28	257	214
30	240	200
32	225	188
36	200	167
40	180	150
44	164	136
48	150	...
52	138	...

NOTE—It is not practical to build synchronous generators of all kVA ratings at all speeds.

NEMA Standard 8-10-1944, revised 9-19-1962.

▲ Revised.

MG 1-22.13 Voltage Ratings

Voltage Ratings, Volts	
Three Phase	Single Phase
208Y/120	120
240	120/240
480	240
600	
2400	
4160Y/2400	
4800	
6900	
13800	

These voltage ratings apply to 60-hertz circuits only.

NOTE—It is not practical to build synchronous generators of all kVA ratings for all of these voltage ratings.

Recommended Standard 8-10-1944, NEMA Standard 11-13-1952, revised 9-19-1962; 7-13-1967; 7-16-1969; 5-12-1975; 7-12-1978; 1-29-1981.

MG 1-22.14 Frequencies

Frequencies shall be 50 and 60 hertz.

NEMA Standard 8-5-1930, revised 9-19-1962.

MG 1-22.15 Excitation Voltages

The excitation voltages for field windings shall be 62½, 125, 250, 375 and 500 volts direct current. These excitation voltages do not apply to generators of the brushless type with direct-connected exciters.

NOTE—It is not practical to design all kVA ratings of generators for all of the above excitation voltages.

NEMA Standard 5-20-1912, revised 6-22-1950; 9-19-1962.

Copyright National Electrical Manufacturers Association
Provided by IHS under license with NEMA
No reproduction or networking permitted without license from IHS
Not for Resale

Copyright National Electrical Manufacturers Association
Provided by IHS under license with NEMA
No reproduction or networking permitted without license from IHS
Not for Resale

9009279 0003911 574

MG 1-22.16 Typical Kilowatt Ratings of Exciters for 0.8 Power Factor 3-phase Synchronous Generators

When synchronous generators have individual exciters, the kilowatt ratings given in Table 22-1 represent typical kilowatt ratings for such exciters.

TABLE 22-1
EXCITER RATINGS IN KILOWATTS FOR 60-HERTZ, 0.8 POWER FACTOR, SYNCHRONOUS GENERATORS

Generator Rating		Speed, Rpm																		
kVA	kW	1800	1200	900	720	600	514	450	400	360	327	300	277	257	240	225	200	180	164	150
31.3	25	1.0	1.5	2.0	2.0	3.0	3.0	3.0	3.0	4.5	4.5	4.5	4.5	4.5	...	...	...	...	...	...
37.5	30	1.5	1.5	2.0	3.0	3.0	3.0	3.0	4.5	4.5	4.5	4.5	4.5	4.5	4.5	4.5	...	...	...	...
50	40	1.5	2.0	3.0	3.0	3.0	4.5	4.5	4.5	4.5	4.5	4.5	4.5	6.5	6.5	6.5	6.5	6.5	6.5	6.5
62.5	50	1.5	2.0	3.0	3.0	4.5	4.5	4.5	4.5	4.5	4.5	6.5	6.5	6.5	6.5	6.5	6.5	6.5	6.5	9.0
75	60	2.0	3.0	3.0	3.0	4.5	4.5	4.5	4.5	6.5	6.5	6.5	6.5	6.5	6.5	6.5	6.5	9.0	9.0	9.0
93.8	75	2.0	3.0	3.0	4.5	4.5	4.5	6.5	6.5	6.5	6.5	6.5	6.5	6.5	6.5	9.0	9.0	9.0	9.0	9.0
125	100	2.0	3.0	4.5	4.5	6.5	6.5	6.5	6.5	6.5	6.5	6.5	9.0	9.0	9.0	9.0	9.0	9.0	9.0	13
156	125	3.0	4.5	4.5	4.5	6.5	6.5	6.5	6.5	9.0	9.0	9.0	9.0	9.0	9.0	9.0	9.0	13	13	13
187	150	3.0	4.5	4.5	6.5	6.5	6.5	6.5	9.0	9.0	9.0	9.0	9.0	9.0	9.0	13	13	13	13	13
219	175	3.0	4.5	6.5	6.5	6.5	9.0	9.0	9.0	9.0	9.0	9.0	9.0	13	13	13	13	13	13	13
250	200	3.0	4.5	6.5	6.5	9.0	9.0	9.0	9.0	9.0	9.0	13	13	13	13	13	13	13	13	13
312	250	4.5	6.5	6.5	6.5	9.0	9.0	9.0	9.0	13	13	13	13	13	13	13	13	17	17	17
375	300	4.5	6.5	6.5	9.0	9.0	9.0	13	13	13	13	13	13	13	13	13	17	17	17	17
438	350	4.5	6.5	9.0	9.0	9.0	13	13	13	13	13	13	13	17	17	17	17	17	17	21
500	400	6.5	6.5	9.0	9.0	13	13	13	13	13	13	13	17	17	17	17	17	17	21	21
625	500	6.5	9.0	9.0	13	13	13	13	13	17	17	17	17	17	17	17	21	21	21	21
750	600	6.5	9.0	13	13	13	13	17	17	17	17	17	17	21	21	21	21	21	25	25
875	700	9.0	9.0	13	13	17	17	17	17	17	21	21	21	21	21	21	25	25	25	25
1000	800	9.0	13	13	13	17	17	17	17	21	21	21	21	21	25	25	25	25	25	33
1125	900	9.0	13	13	17	17	17	21	21	21	21	21	21	25	25	25	25	33	33	33
1250	1000	9.0	13	17	17	17	21	21	21	21	21	25	25	25	25	25	33	33	33	33
1563	1250	13	17	17	17	21	21	21	25	25	25	25	33	33	33	33	33	33	33	40
1875	1500	13	17	17	21	21	25	25	25	33	33	33	33	33	33	33	33	40	40	40
2188	1750	17	17	21	21	25	25	33	33	33	33	33	33	33	33	40	40	40	40	40
2500	2000	17	21	21	25	33	33	33	33	33	33	33	40	40	40	40	40	40	50	50
2812	2250	17	21	25	25	33	33	33	33	33	40	40	40	40	40	40	50	50	50	50
3125	2500	21	25	25	33	33	33	33	40	40	40	40	40	40	50	50	50	50	50	50
3750	3000	21	25	33	33	40	40	40	40	40	50	50	50	50	50	50	50	65	65	65
4375	3500	25	33	33	40	40	40	50	50	50	50	50	50	50	50	65	65	65	65	65
5000	4000	33	33	40	40	50	50	50	50	50	50	65	65	65	65	65	65	65	65	65
5625	4500	33	40	40	50	50	50	50	65	65	65	65	65	65	65	65	65	65	85	85
6250	5000	33	40	50	50	50	65	65	65	65	65	65	65	65	65	65	85	85	85	85
7500	6000	40	50	65	65	65	65	65	65	65	85	85	85	85	85	85	85	85	85	85
8750	7000	50	65	65	65	65	85	85	85	85	85	85	85	85	85	85	85	100	100	100

Recommended Standard 10-29-1943, revised 6-24-1949; 11-13-1952; 5-17-1953; NEMA Standard 11-12-1953, revised 11-12-1959; Authorized Engineering Information 11-17-1960, revised 9-19-1962; 11-16-1972.

9009279 0003912 430

TESTS AND PERFORMANCE

MG 1-22.40 Temperature Rise ▲

The observable temperature rise under rated load conditions of each of the various parts of the synchronous generator, above the temperature of the cooling air, shall not exceed the values given in the following table. The temperature of the cooling air* is the temperature of the external air as it enters the ventilating openings of the machine, and the temperature rises given in the table are based on a maximum temperature of 40°C for this external air. Temperatures shall be determined in accordance with the latest revision of IEEE Std 115, *Test Procedure for Synchronous Machines.*

Item	Machine Part	Method of Temperature Determination	Temperature Rise, Degrees C			
			Class of Insulation System			
			A	B	F	H
1	Armature winding					
	a. All kVA ratings	Resistance	60	80	105	125
	b. 1563 kVA and less	Embedded detector†	70	90	115	140
	c. Over 1563 kVA					
	(1) 7000 volts and less	Embedded detector†	65	85	110	135
	(2) Over 7000 volts	Embedded detector†	60	80	105	125
2	Field winding	Resistance	60	80	105	125
3	Cores, amortisseur windings and mechanical parts such as collector rings, brushholders, and brushes, may attain such temperatures as will not injure the machine in any respect.					

* For totally-enclosed water-air-cooled machines, the temperature of the cooling air is the temperature of the air leaving the coolers. See Note I.

† Embedded detectors are located within the slot of the machine and can be either resistance elements or thermocouples. For generators equipped with embedded detectors this method shall be used to demonstrate conformity with the standard. (See MG 1-20.63.)

NOTE I—Totally-enclosed water-air-cooled machines are normally designed for the maximum cooling water temperature encountered at the location where each machine is to be installed. With a cooling water temperature not exceeding that for which the machine is designed:

a. On machines designed for cooling water temperatures up to 30°C—the temperature of the air leaving the coolers shall not exceed 40°C.

b. On machines designed for higher cooling water temperatures—the temperature of the air leaving the coolers may exceed 40°C provided the temperature rises of the machine parts are then limited to values less than those given in the table by the number of degrees that the temperature of the air leaving the coolers exceeds 40°C.

NOTE II—For generators which operate under prevailing barometric pressure and which are designed not to exceed the specified temperature rise at altitudes from 3300 feet (1000 meters) to 13000 feet (4000 meters), the temperature rises, as checked by tests at low altitudes, shall be less than those listed in the foregoing table by 1 percent of the specified temperature rise for each 330 feet (100 meters) of altitude in excess of 3300 feet (1000 meters).

NEMA Standard 6-11-1946, revised 6-28-1951; 11-15-1951; 7-21-1954; 9-19-1962; 11-15-1962; 8-20-1966; 7-16-1969; 11-8-1973; 9-3-1980.

NOTE III—Temperature rises in the foregoing table are based upon a reference ambient temperature of 40°C. However, it is recognized that synchronous generators may be required to operate in an ambient temperature higher than 40°C. For successful operation of the generators in ambient temperatures higher than 40°C, it is recommended that the temperature rises of the generators given in the foregoing table be reduced as indicated below, for the ranges of ambient temperatures given. (Exception—for totally-enclosed water-air-cooled machines, see Note I.)

Ambient Temperature, Degrees C	Values by Which the Temperature Rises in the Foregoing Table Should be Reduced, Degrees C
Above 40 up to and including 50	10
Above 50 up to and including 60	20

NOTE IV—Temperature rises in the above table are based upon generators rated on a continuous duty basis. Synchronous generators may be rated on a stand-by duty basis (see MG 1-22.84). In such cases, it is recommended that temperature rises not exceed those in the foregoing table by more than 25°C under continuous operation at the stand-by rating.

NOTE V—Diesel engine specifications often call for machines which are suitable for 10 percent overload for 2 hours out of any 24 consecutive hours of operation. Generators having a corresponding overload capability are sometimes required. In such cases, it is recommended that the generators and their excitation systems be designed to deliver 110 percent of rated kVA at rated power factor, frequency and voltage with temperature rises under rated load conditions not exceeding those given in the above table.

Authorized Engineering Information 9-19-1962, revised 1-21-1964; 11-12-1970; 12-16-1971; 11-8-1973.

MG 1-22.41 Maximum Momentary Overloads

Synchronous generators shall be capable of carrying a 1-minute overload of 50 percent of normal rated current with the field set for normal rated load excitation.

NOTE—It is recognized that the voltage, power factor and temperature rise will differ from rated values when generators are subjected to this overload condition.

Recommended Standard 6-4-1948, NEMA Standard 11-12-1953.

MG 1-22.42 Maximum Deviation Factor

The deviation factor of the open-circuit line-to-line terminal voltage of synchronous generators shall not exceed 0.1.

Recommended Standard 1-26-1948, NEMA Standard 11-12-1953, revised 9-19-1962.

MG 1-22.43 Telephone Influence Factor (TIF)

A. When specified, the balanced telephone influence factor (TIF) based on the weighting factors given in par. C shall not exceed the following values:

kVA Rating of Generator	TIF
62.5 to 299	350
300 to 699	250
700 to 4999	150
5000 to 19999	100
20000 and above	70

B. When specified, the residual component telephone influence factor based on the weighting factors given in par. C shall not exceed the following values. The residual component applies only to those generators having voltage ratings of 2000 volts and higher.

▲ Revised.

Copyright National Electrical Manufacturers Association
Provided by IHS under license with NEMA
No reproduction or networking permitted without license from IHS
Not for Resale

kVA Rating of Generator	TIF
	Residual
1000 to 4999	100
5000 to 19999	75
20000 and above	50

C. The single-frequency telephone influence weighting factors (TIF_f) according to the 1960 single frequency weighting are as follows:

1960 Single-frequency TIF_f Weighting Factors

Frequency	TIF_f	Frequency	TIF_f
60	0.5	1,800	7,570
180	30	1,860	7,820
300	225	1,980	8,330
360	400	2,100	8,830
420	650	2,160	9,080
540	1,320	2,220	9,330
660	2,260	2,340	9,840
720	2,760	2,460	10,340
780	3,360	2,580	10,600
900	4,350	2,820	10,210
1,000	5,000	2,940	9,820
1,020	5,100	3,000	9,670
1,080	5,400	3,180	8,740
1,140	5,630	3,300	8,090
1,260	6,050	3,540	6,730
1,380	6,370	3,660	6,130
1,440	6,650	3,900	4,400
1,500	6,680	4,020	3,700
1,620	6,970	4,260	2,750
1,740	7,320	4,380	2,190
(Continued)		5,000	840

D. The telephone influence factor shall be measured in accordance with IEEE Std 115-1965, *Test Procedure for Synchronous Machines.*

The telephone influence factor of a synchronous generator is the measure of the possible effect of harmonics in the generator voltage wave on telephone circuits. TIF shall be measured at the generator terminals on *open circuit* at rated voltage and frequency.

Recommended Standard 10-27-1944, NEMA Standard 11-12-1953, revised 9-21-1966; 3-19-1980.

MG 1-22.44 Efficiency

Efficiency and losses shall be determined in accordance with the latest revision of IEEE Std 115, *Test Procedure for Synchronous Machines.* The efficiency shall be determined at rated output, voltage, frequency, and balanced load conditions.

The following losses shall be included in determining the efficiency:

1. I^2R loss of armature.
2. I^2R loss of field.
3. Core loss.
4. Stray load loss.
5. Friction and windage loss.*
6. Exciter loss if exciter is supplied with and driven from shaft of machine.

Power required for auxiliary items, such as external pumps or fans, that are necessary for the operation of the generator shall be stated separately.

In determining I^2R losses, the resistance of each winding shall be corrected to a temperature equal to an ambient temperature of 25 °C plus the observed rated load temperature rise measured by resistance. When the rated load temperature rise has not been measured, the resistance of the winding shall be corrected to the following temperature:

Class of Insulation System	Temperature, Degrees C
A	75
B	95
F	115
H	130

This reference temperature shall be used for determining I^2R losses at all loads. If the rated temperature rise is specified as that of a lower class of insulation system, the temperature for resistance correction shall be that of the lower insulation class.

* In the case of generators which are furnished with thrust bearings, only that portion of the thrust bearing loss produced by the generator itself shall be included in the efficiency calculation. Alternatively, a calculated value of efficiency, including bearing loss due to external thrust load, may be specified.

In the case of generators which are furnished with less than a full set of bearings, friction and windage losses which are representative of the actual installation shall be determined by (1) calculation or (2) experience with shop test bearings and shall be included in the efficiency calculations.

NEMA Standard 9-21-1967, revised 1-17-1968; 5-12-1969; 5-17-1971; 1-14-1975.

MG 1-22.45 Short-circuit Requirements

A synchronous generator shall be capable of withstanding, without injury, a 30-second 3-phase short circuit at its terminals when operating at rated kVA and power factor, at 5 percent overvoltage, with fixed excitation. The generator shall also be capable of withstanding, without injury, any other short circuit at its terminals of 30 seconds or less, provided:

1. The machine phase currents under fault conditions are such that the negative phase sequence current, (I_2) expressed in per unit of stator current at rated kVA, and the duration of the fault in seconds, t, are limited to values which give an integrated product, $(I_2)^2t$, equal to or less than 40, and
2. The maximum phase current is limited by external means to a value which does not exceed the maximum phase current obtained from the 3-phase fault.

NEMA Standard 10-29-1943, revised 11-15-1962; 9-21-1966.

MG 1-22.46 Overspeeds ▲

Salient-pole synchronous generators shall be so constructed that, in an emergency, not to exceed 1 minute, they will withstand an overspeed of 25 percent without mechanical injury.

NEMA Standard 10-27-1944, revised 11-15-1951;9-15-1983.

MG 1-22.47 Variation from Rated Voltage

Synchronous generators shall operate successfully at rated kVA, frequency and power factor at any voltage not more than 5 percent above or below rated voltage but not necessarily in accordance with the standards of performance established for operation at normal rating.

Recommended Standard 11-1-1946, NEMA Standard 11-12-1953.

▲ Revised.

Copyright National Electrical Manufacturers Association
Provided by IHS under license with NEMA
No reproduction or networking permitted without license from IHS

Not for Resale

9009279 0003914 203

MG 1-22.48 Specification Form for Slip-ring Synchronous Generators

The specification form for listing performance data on synchronous generators with slip rings shall be as follows:

Date_____

SLIP-RING SYNCHRONOUS GENERATOR RATING

kVA	Power Factor	kW	Rpm	Number of Poles	Phase	Hertz	Volts	Amperes	Frame

Description:

Is amortisseur winding included?_____

kVA	Power Factor	Temperature Rise (Degrees C) Not to Exceed ▲			Excitation Requirements (Maximum)	
		Armature Winding		Field Winding		
		Resistance	Embedded Temperature Detector	Resistance	kW	Exciter Rated Voltage

Rating and temperature rise are based on cooling air not exceeding 40°C and altitude not exceeding 3300 feet (1000 meters). High-potential tests in accordance with standards of the American National Standards Institute (ANSI C50.10). The rotor of the generator and the armature of the direct-connected exciter, when used, will stand an overspeed of _____ percent without mechanical injury.

Minimum Efficiencies							
kVA	Power Factor	kW		Full Load	¾ Load	½ Load	

Efficiencies are determined by including I^2R losses of armature and field windings at _____°C, core losses, stray load losses, and friction and windage losses*. Exciter loss is included if supplied with and driven from shaft of machine. Field rheostat losses are not included.

*1. In the case of a generator furnished with a thrust bearing, only that portion of the thrust bearing loss produced by the generator itself is included in the efficiency calculation.
2. In the case of a generator furnished with less than a full set of bearings, friction and windage losses representative of the actual installation are included as determined by (a) calculation or (b) experience with shop test bearings.

Approximate Data	
Wk^2 of the Generator	Pr Synchronizing Power per Electrical Radian

Approximate Weight, Pounds			
Total Net	Rotor Net	Heaviest Part for Crane Net	Total Shipping

NEMA Standard 8-10-1944, revised 11-12-1970.

▲ Editorially revised.

Copyright National Electrical Manufacturers Association
Provided by IHS under license with NEMA
No reproduction or networking permitted without license from IHS
Not for Resale

9009279 0003915 14T

MG 1-22.49 Specification Form for Brushless Synchronous Generators

The specification form for listing performance data on brushless synchronous generators shall be as follows:

Date_____

BRUSHLESS SYNCHRONOUS GENERATOR RATING

kVA	Power Factor	kW	Rpm	Number of Poles	Phase	Hertz	Volts	Amperes	Frame

Description:

Is amortisseur winding included?_____

kVA	Power Factor	Temperature Rise (Degrees C) Not to Exceed ▲				Excitation Requirements* (2) (Maximum)	
			Armature Windings		Field Windings		
			Resistance	Embedded Temperature Detector	Resistance	Watts	Exciter Rated Field Voltage
		Generator					
		Exciter* (1)					

* For rotating transformer give (1) data for equivalent winding temperatures and (2) input kVA and voltage instead of excitation for exciter.

Rating and temperature rise are based on cooling air not exceeding 40°C and altitude not exceeding 3300 feet (1000 meters). High-potential tests in accordance with standards of the American National Standards Institute (ANSI C50.10). The rotor of the generator and the armature of the direct-connected exciter, when used, will stand an overspeed of _____ percent without mechanical injury.

Minimum Efficiencies							
kVA	Power Factor	kW		Full Load	¾ Load	½ Load	

Efficiencies are determined by including I^2R losses of generator and exciter armature and field windings at _____ °C, generator and exciter core losses, stray load losses, and friction and windage losses†. Field rheostat losses are not included. When furnished with rotating transformer, replace exciter losses with equivalent transformer losses.

†1. In the case of a generator furnished with a thrust bearing, only that portion of the thrust bearing loss produced by the generator itself is included in the efficiency calculation.
2. In the case of a generator furnished with less than a full set of bearings, friction and windage losses representative of the actual installation are included as determined by (a) calculation or (b) experience with shop test bearings.

Approximate Data	
Wk^2 of the Generator	Pr Synchronizing Power per Electrical Radian

Approximate Weight, Pounds			
Total Net	Rotor Net	Heaviest Part for Crane Net	Total Shipping

NEMA Standard 8-10-1944, revised 11-12-1970.

▲ Editorially revised.

Copyright National Electrical Manufacturers Association
Provided by IHS under license with NEMA
No reproduction or networking permitted without license from IHS
Not for Resale

9009279 0003916 086

MG 1-22.50 Routine Tests

A. GENERATORS NOT COMPLETELY ASSEMBLED IN THE FACTORY

The following tests shall be made on all generators which are not completely assembled in the factory, including those furnished without a shaft and/or a complete set of bearings.

1. Resistance of armature and field windings.
2. Polarity of field coils.
3. High-potential test in accordance with MG 1-22.51.

B. GENERATORS COMPLETELY ASSEMBLED IN THE FACTORY

The following tests shall be made on generators which are completely assembled in the factory and furnished with a shaft and a complete set of bearings.

1. Resistance of armature and field windings.
2. Check no-load field current at normal voltage and frequency.*
3. High-potential test in accordance with MG 1-22.51.

* On generators having brushless excitation systems, check instead the exciter field current at no load with normal voltage and frequency on the generator.

Recommended Standard 10-29-1943, revised 6-24-1949, NEMA Standard 11-12-1953, revised 1-21-1964; 5-17-1971.

MG 1-22.51 High-potential Tests

A. SAFETY PRECAUTIONS AND TEST PROCEDURES

See MG 1-3.01.

B. TEST VOLTAGE—ARMATURE WINDINGS

The test voltage for all generators (with the exception of those described in par. F) shall be an alternating voltage whose effective value is 1000 volts plus twice the rated voltage of the machine.*

C. TEST VOLTAGE—FIELD WINDINGS, GENERATORS WITH SLIP RINGS

The test voltage for all generators with slip rings (with the exception of those described in par. F) shall be an alternating voltage whose effective value is as follows:

1. Rated excitation voltage $\leq$ 500 volts dc—10 times the rated excitation voltage but in no case less than 1500 volts.
2. Rated excitation voltage > 500 volts dc—4000 volts plus twice the rated excitation voltage.

D. TEST VOLTAGE—ASSEMBLED BRUSHLESS GENERATOR FIELD WINDING AND EXCITER ARMATURE WINDING

The test voltage for all assembled brushless generator field windings and exciter armature windings (with the exception of those described in par. F) shall be an alternating voltage whose effective value is as follows:

1. Rated excitation voltage $\leq$ 350 volts dc—10 times the rated excitation voltage but in no case less than 1500 volts.
2. Rated excitation voltage > 350 volts dc—2800 volts plus twice the rated excitation voltage.

NOTE—The brushless circuit components (diodes, thyristors, etc.) on an assembled brushless exciter and synchronous machine field wiring shall be short-circuited (not grounded) during the test.

E. TEST VOLTAGE—BRUSHLESS EXCITER FIELD WINDING

The test voltage for all brushless exciter field windings (with the exception of those described in par. F) shall be an alternating voltage whose effective value is as follows:

1. Rated excitation voltage $\leq$ 350 volts dc—10 times the rated excitation voltage but in no case less than 1500 volts.
2. Rated excitation voltage > 350 volts dc—2800 volts plus twice the rated excitation voltage.
3. Exciters with ac excited stators (fields) shall be tested at 1000 volts plus twice the rated ac voltage of the stator.

F. EXCEPTIONS TO TEST VOLTAGES GIVEN IN PAR. B, C, D, AND E

For generators of less than 250 watts output and having rated voltages not exceeding 250 volts, the test voltage of the armature and field winding (including assembled brushless exciters) shall be an alternating voltage whose effective value is 1000 volts.

For generators whose armature or field windings are for connection to circuits of 35 volts or less, the test voltage for such a winding (including assembled brushless exciters) shall be an alternating voltage whose effective value is 500 volts.

NEMA Standard 6-4-1948, revised 11-15-1962; 9-11-1974; 1-5-1977; 7-13-1977; 1-10-1978.

* A direct instead of an alternating voltage is sometimes used for high-potential tests on primary windings of machines rated 6000 volts or higher. In such cases, a test voltage equal to 1.7 times the alternating-current test voltage (effective value) as given in the preceding paragraphs is recommended. Following a direct-voltage high-potential test, the tested winding should be thoroughly grounded. The insulation rating of the winding and the test level of the voltage applied to determine the period of time required to dissipate the charge and, in many cases, the ground must be maintained for several hours to dissipate the charge to avoid hazard to personnel.

Authorized Engineering Information 11-15-1962; revised 7-16-1969; 5-17-1971; 1-5-1977.

MG 1-22.52 Machine Noise

See MG 1-20.49.

MG 1-22.53 Balance of Machines

The balance for salient-pole synchronous generators covered by this Part 22, when measured in accordance with MG 1-20.53, shall not exceed the following:

Speed, Rpm	Maximum Amplitude, Inches, Peak to Peak
3000 and above	0.001
1500–2999, incl.	0.002
1000–1499, incl.	0.0025
999 and below	0.003

NEMA Standard 7-16-1969.

Copyright National Electrical Manufacturers Association
Provided by IHS under license with NEMA
No reproduction or networking permitted without license from IHS
Not for Resale

MANUFACTURING

MG 1-22.60 Location of Terminals

On horizontal synchronous generators furnished without bearings (or with pedestal-type bearings) and without a conduit box, the recommended location of the armature winding terminals is at the bottom edge of the stator frame within 30 degrees of the vertical centerline. On all other types of horizontal synchronous generators, the recommended location is on the left-hand side of the generator, viewing the end of the generator opposite the drive.

Recommended Standard 8-5-1930, NEMA Standard 11-12-1953, Authorized Engineering Information 9-19-1962.

MG 1-22.61 Nameplate Marking

The following minimum amount of information shall be given on all nameplates. For abbreviations, see MG 1-1.80.

1. Manufacturer's name, serial number or other suitable identification.
2. Kilovolt-ampere output.
3. Power factor.
4. Time rating.
5. Temperature rise for rated continuous load.*
6. Rated speed in rpm.
7. Voltage.
8. Rated current in amperes per terminal.
9. Number of phases.
10. Frequency.
11. Rated field current.†
12. Rated excitation voltage.†

* As an alternate marking, this item may be replaced by the following:

1. Maximum ambient temperature for which the generator is designed (see MG 1-22.40, Note III).
2. Insulation system designation (if armature and field use different classes of insulation systems, both insulation systems shall be given, that for the armature being given first).

† Applies to exciter in case of brushless machine.

NEMA Standard 8-10-1944, revised 9-19-1962; 11-12-1970.

MG 1-22.62 Tolerance Limits in Dimensions

The dimensions from the shaft center to the bottom of the feet shall be not greater than the nominal dimensions shown on the manufacturer's dimension sheet. When the generator is coupled or geared to the driven machines, shims are usually required to secure accurate alignment

NEMA Standard 1-17-1968.

MG 1-22.63 Generator Terminal Housings and Boxes▲

A. When generators covered by this Part 22 are provided with terminal housings for wire-to-wire connections*, the housings shall have the following minimum dimensions and usable volumes:

Voltage	kVA	Minimum Usable Volumne, Cubic Inches	Minimum Dimension, Inches	Minimum Centerline Distance**, Inches
480	201- 312, incl.	600	7	. . .
	313- 500, incl.	1100	8	. . .
	501- 750, incl.	2000	8	. . .
	751-1000, incl.	3200	10	. . .
2400	251- 625, incl.	180	5	. . .
	626-1000, incl.	330	6	. . .
	1001-1563, incl.	600	7	. . .
	1564-2500, incl.	1100	8	. . .
	2501-3750, incl.	2000	8	. . .
4160	351-1250, incl.	2000	8	12.5
	1251-5000, incl.	5600	14	16
	5001-7500, incl.	8000	16	20
6900	876-3125, incl.	5600	14	16
	3126-8750, incl.	8000	16	20

*Terminal housings containing surge capacitors, surge arrestors, current transformers, or potential transformers require individual consideration.
**Minimun distance from the entrance plate for conduit entrance to the centerline of motor leads.

B. For generators rated 601 volts and higher, accessory leads shall terminate in a terminal box or boxes separate from the generator terminal housing. As an exception, current and potential transformers located in the generator terminal housing shall be permitted to have their secondary connections terminated in the generator terminal housing if separated from the generator leads by a suitable physical barrier to prevent accidental contact.

C. For generators rated 601 volts and higher, the determination of leads of accessory items normally operating at a voltage of 50 volts (rms) or less shall be separated from leads of higher voltage by a suitable physical barrier to prevent accidental contact or terminated in a separate box.

NEMA Standard 11-12-1970, revised 1-14-1975; 9-15-1983; 11-15-1984.

MG 1-22.64 Embedded Detectors

See MG 1-20.63.

▲ Revised.

Copyright National Electrical Manufacturers Association
Provided by IHS under license with NEMA
No reproduction or networking permitted without license from IHS
Not for Resale

9009279 0003918 959

APPLICATION DATA

MG 1-22.80 Parallel Operation ▲

Many of the factors which affect the parallel operation of generators are contained in the prime mover, and the characteristics of the equipment connected to the system with which the generator is to operate in parallel also impose conditions which should be taken into account in parallel operation.

When requested, the generator manufacturer should furnish the following, and any other information as may be required, in determining the system requirements for successful parallel operation:

1. Synchronizing torque coefficient P_r. Unless otherwise specified the value of P_r should correspond to a pulsation frequency of one-half the rpm (See MG 1-21.86).
2. Wk^2 of the generator rotor.

Authorized Engineering Information 9-17-1981.

MG 1-22.81 Calculation of Natural Frequency

See MG 1-21.86.

MG 1-22.82 Torsional Vibration ▲

Excessive torsional vibration may result in overstressed shafts, couplings, and other rotating parts. Torsional vibration is difficult to determine and measure, and it is recommended that torsional stresses be investigated when generators are to be driven by prime movers producing periodic torque pulsations.

While the factors which effect torsional vibration are primarily contained in the design of the prime mover, the design of the generator rotor should also be considered. When requested, the generator manufacturer should furnish the Wk^2 and weight of the generator rotor, and any other information, such as the stiffness of the spider, as may be required to make a successful design of the combined unit.

Before the generator spider and such part of the shaft as may be furnished by the generator manufacturer are manufactured, the final drawings of the same should be submitted for approval insofar as their design affects torsional vibration.

Authorized Engineering Information 9-17-1981.

MG 1-22.83 Service Conditions

A. General

Generators should be properly selected with respect to their service conditions, usual or unusual, both of which involve the environmental conditions to which the machine is subjected and the operating conditions. Machines conforming to Part 22 of this publication are designed for operation in accordance with their ratings under usual service conditions. Some machines may also be capable of operating in accordance with their ratings under one or more unusual service conditions. Definite-purpose or special-purpose machines may be required for some unusual conditions.

Service conditions, other than those specified as usual, may involve some degree of hazard. The additional hazard depends upon the degree of departure from usual operating conditions and the severity of the environment to which the machine is exposed. The additional hazard results from such things as overheating, mechanical failure, abnormal deterioration of the insulation system, corrosion, fire and explosion.

Although past experience of the user may often be the best guide, the manufacturer of the driving equipment and the generator manufacturer should be consulted for further information regarding any unusual service conditions which increase the mechanical or thermal duty on the machine and, as a result, increase the chances for failure and consequent hazard. This further information should be considered by the user, his consultants, or others most familiar with the details of the application involved when making the final decision.

B. Usual Service Conditions

1. An ambient temperature in the range of 0 °C to 40 °C or, when water cooling is used, in the range of 10 °C to 40 °C.
2. An altitude not exceeding 3300 feet (1000 meters).
3. A location or supplementary enclosure, if any, such that there is no serious interference with the ventilation of the generator.

C. Unusual Service Conditions

The manufacturer should be consulted if any unusual service conditions exist which may affect the construction or operation of the generator. Among such conditions are:

1. Exposure to:
   a. Combustible, explosive, abrasive or conducting dusts.
   b. Lint or very dirty operating conditions where the accumulation of dirt will interfere with normal ventilation.
   c. Chemical fumes, flammable or explosive gases.
   d. Nuclear radiation.
   e. Steam, salt-laden air, or oil vapor.
   f. Damp or very dry locations, radiant heat, vermin infestation, or atmospheres conducive to the growth of fungus.
   g. Abnormal shock or vibration from external sources.
   h. Abnormal axial or side thrust imposed on the generator shaft.

▲ Revised.

Copyright National Electrical Manufacturers Association
Provided by IHS under license with NEMA
No reproduction or networking permitted without license from IHS
Not for Resale

9009279 0003919 895

2. Operation where:
   a. There is excessive departure from rated voltage (see MG 1-22.47).
   b. Low noise levels are required.
   c. Generator neutral will be solidly grounded.
3. Operation at speeds other than rated speed.
4. Operation in a poorly ventilated room, in a pit, or in an inclined position.
5. Operation where subjected to:
   a. Torsional vibration (see MG 1-22.82).
   b. Out-of-phase paralleling.

Authorized Engineering Information 7-15-1970; 1-29-1981.

MG 1-22.84 Stand-by Generator

Synchronous generators are at times assigned a stand-by rating where the application is an emergency back-up power source and is not the prime power supply. Under such conditions, temperature rises up to 25°C above those for continuous-duty operation may occur in accordance with Note IV of MG 1-22.40.

Operation at these stand-by temperature rise values causes the generator insulation to age thermally at about four to eight times the rate that occurs at the continuous-duty temperature rise values, i.e., operating 1 hour at stand-by temperature rise values is approximately equivalent to operating 4 to 8 hours at continuous-duty temperature rise values.

Authorized Engineering Information 12-16-1971, revised 3-21-1973.

MG 1-22.85 Belt, Chain and Gear Drive

When generators are for belt, chain or gear drive, the generator manufacturer should be consulted.

Authorized Engineering Information 5-17-1976.

Copyright National Electrical Manufacturers Association
Provided by IHS under license with NEMA
No reproduction or networking permitted without license from IHS
Not for Resale

9009279 0003920 507

SECTION III

LARGE APPARATUS

Part 23. DC Motors

The standards in this Part 23 of Section III cover direct-current motors built in frames larger than that having a continuous dripproof rating, or equivalent capacity, of 1.25 horsepower per rpm, open type.

Copyright National Electrical Manufacturers Association
Provided by IHS under license with NEMA
No reproduction or networking permitted without license from IHS
Not for Resale

9009279 0003921 443

Part 23

LARGE APPARATUS—

DC MOTORS LARGER THAN 1.25 HORSEPOWER PER RPM, OPEN TYPE

CLASSIFICATION

MG 1-23.01 General Industrial Motors

These motors are designed for all general industrial service (excepting metal rolling mill service) and may be designed, when specified, for operation at speeds above base speed by field weakening as indicated in Table 23-3 of MG 1-23.11 and Table 23-5 of MG 1-23.12.

Authorized Engineering Information 1-23-1951, revised 11-15-1962.

MG 1-23.02 Metal Rolling Mill Motors●

These motors are designed particularly for metal rolling mill service (except for reversing hot-mill service, see MG 1-23.03) and are known as either Class N or Class S metal rolling mill motors. They may be designed for operation with a single direction of rotation (nonreversing) or, if required, they may be designed for either direction of rotation (reversing). These motors differ in design from general industrial motors because of the requirements for this service which are as follows:

1. Continuous overload capability (see par. B of MG 1-23.41).
2. Heavy mechanical construction.
3. High momentary overload (see MG 1-23.41).
4. Close speed regulation.

A. Class N Metal Rolling Mill Motors

Class N metal rolling mill motors are normally designed for operation at a given base speed but, when specified, may be designed for operation at speeds above base speeds by field weakening as indicated in Table 23-3 of MG 1-23.11 and Table 23-5 of MG 1-23.12.

B. Class S Metal Rolling Mill Motors

Still higher speeds than those attained for Class N metal rolling mill motors by field weakening can be obtained, when specified, on metal rolling mill motors by using higher strength material, additional banding and bracing. Such motors are known as Class S metal rolling mill motors. The maximum speeds recommended for operation of these motors are given in Table 23-4 of MG 1-23.11 and Table 23-6 of MG 1-23.12.

Authorized Engineering Information 1-23-1951, revised 11-12-1959; 11-15-1962; 1-10-1978.

MG 1-23.03 Reversing Hot Mill Motors▲

These motors are designed particularly for application to reversing hot mills, such as blooming and slabbing mills. They are characterized by:

1. No continuous overload capability.
2. Mechanical construction suitable for rapid reversal and for the sudden application of heavy loads.
3. Higher momentary overload capacity (see par. D of MG 1-23.41).

Authorized Engineering Information 11-12-1959, revised 11-15-1962; 3-21-1973; 1-10-1978.

● Editorially revised.

Copyright National Electrical Manufacturers Association
Provided by IHS under license with NEMA
No reproduction or networking permitted without license from IHS
Not for Resale

Copyright National Electrical Manufacturers Association
Provided by IHS under license with NEMA
No reproduction or networking permitted without license from IHS
Not for Resale

9009279 0003922 38T

RATINGS

MG 1-23.09 Basis of Rating

Direct-current motors covered by this Part 23 shall be rated on a continuous-duty basis unless otherwise specified. The rating shall be expressed in horsepower available at the shaft at rated speed (or speed range) and voltage.

NEMA Standard 3-21-1973.

MG 1-23.10 Horsepower, Speed and Voltage Ratings

A. General Industrial Motors and Metal Rolling Mill Motors, Class N and Class S

Horsepower, base speed and voltage ratings for these motors shall be those shown in Table 23-1.

Table 23-1

	Base Speed, Rpm																				
Hp	850	650	500	450	400	350	300	250	225	200	175	150	125	110	100	90	80	70	65	60	55	50
250	..	..	..	..	..	..	..	..	..	..	A	A	A	A	A	..	..	..	..	..	..	..
300	..	..	..	..	..	..	..	..	A	A	A	A	A	A	A	..	..	..	..	..	..	..
400	..	..	..	..	..	..	A	A	A	A	A	A	A	A	A	..	..	..	..	..	..	..
500	..	..	..	..	..	A	A	B	B	B	B	B	B	B	B	C	..	..	..	..	..	..
600	..	..	..	A	A	A	B	B	B	B	B	B	B	B	B	C	C	..	..	..	..	..
700	..	..	A	A	A	B	B	B	B	B	B	B	B	B	B	C	C	C	..	..	..	..
800	..	..	A	A	B	B	B	B	B	B	B	B	B	B	B	C	C	C	C	C	..	..
900	..	A	A	A	B	B	B	B	B	B	B	B	B	B	B	C	C	C	C	C	C	..
1000	..	B	B	B	B	B	B	B	B	B	B	B	B	B	B	C	C	C	C	C	C	C
1250	C	C	C	C	C	C	C	C	C	C	C	C	C	C	C	C	C	C	C	C	C	C*
1500	C	C	C	C	C	C	C	C	C	C	C	C	C	C	C	C	C	C	C	C	C*	C*
1750	C	C	C	C	C	C	C	C	C	C	C	C	C	C	C	C	C	C	C	C*	C*	C*
2000	..	C	C	C	C	C	C	C	C	C	C	C	C	C	C	C	C	C	C*	C*	C*	C*
2250	..	C	C	C	C	C	C	C	C	C	C	C	C	C	C	C	C	C*	C*	C*	C*	C*
2500	..	C	C	C	C	C	C	C	C	C	C	C	C	C	C	C	C	C*	C*	C*	C*	C*
3000	..	..	C	C	C	C	C	C	C	C	C	C	C	C	C	C	C	C*	C*	C*	C*	C*
3500	..	..	..	D	D	D	D	D	D	D	D	D	D	D	D	D	D*	D*	D*	D*	D*	D*
4000	..	..	..	..	D	D	D	D	D	D	D	D	D	D	D	D	D*	D*	D*	D*	D*	D*
4500	..	..	..	..	..	D	D	D	D	D	D	D	D	D	D	D*	D*	D*	D*	D*	D*	D*
5000	..	..	..	..	..	..	D	D	D	D	D	D	D	D	D*	D*	D*	D*	D*	D*	D*	D*
6000	..	..	..	..	..	..	..	..	..	..	D	D	D	D*	D*	D*	D*	D*	D*	D*	D*	D*
7000	..	..	..	..	..	..	..	..	..	..	..	D	D*	D*	D*	D*	D*	D*	D*	D*	D*	D*
8000	..	..	..	..	..	..	..	..	..	..	..	..	D*	D*	D*	D*	D*	D*	D*	D*	D*	D*

* These ratings are based on forced ventilation.
"A" indicates voltage rating at either 250 or 500 volts.
"B" indicates voltage rating at either 250, 500 or 700 volts.
"C" indicates voltage rating at either 500 or 700 volts.
"D" indicates voltage rating at 700 volts, only.

Copyright National Electrical Manufacturers Association
Provided by IHS under license with NEMA
No reproduction or networking permitted without license from IHS

9009279 0003923 216

B. Reversing Hot Mill Motors

Horsepower, base speed and voltage ratings for these motors shall be those shown in Table 23-2.

TABLE 23-2

Hp	Base Speed, Rpm																
	200	175	150	125	110	100	90	80	70	65	60	55	50	45	40	35	30
500	C	C	C	C	C	C	C	..	..	..	..	..	..	..	..	..	..
600	C	C	C	C	C	C	C	C	..	..	..	..	..	..	..	..	..
700	C	C	C	C	C	C	C	C	C	..	..	..	..	..	..	..	..
800	C	C	C	C	C	C	C	C	C	C	C	..	..	..	..	..	..
900	C	C	C	C	C	C	C	C	C	C	C	C	..	..	..	..	..
1000	C	C	C	C	C	C	C	C	C	C	C	C	C	C	C	C	C
1250	C	C	C	C	C	C	C	C	C	C	C	C	C	C	C	C	C
1500	C	C	C	C	C	C	C	C	C	C	C	C	C	C	C	C	C
1750	C	C	C	C	C	C	C	C	C	C	C	C	C	C	C	C	C
2000	C	C	C	C	C	C	C	C	C	C	C	C	C	C	C	C	C
2250	C	C	C	C	C	C	C	C	C	C	C	C	C	C	C	C	C
2500	..	C	C	C	C	C	C	C	C	C	C	C	C	C	C	C	C
3000	..	..	C	C	C	C	C	C	C	C	C	C	C	C	C	C	C
3500	..	..	..	D	D	D	D	D	D	D	D	D	D	D	D	D	D
4000	..	..	..	D	D	D	D	D	D	D	D	D	D	D	D	D	D
4500	..	..	..	..	D	D	D	D	D	D	D	D	D	D	D	D	D
5000	..	..	..	..	..	D	D	D	D	D	D	D	D	D	D	D	D
6000	..	..	..	..	..	..	D	D	D	D	D	D	D	D	D	D	D
7000	..	..	..	..	..	..	..	D	D	D	D	D	D	D	D	D	D
8000	..	..	..	..	..	..	..	D	D	D	D	D	D	D	D	D	D
9000	..	..	..	..	..	..	..	..	D	D	D	D	D	D	D	D	D
10000	..	..	..	..	..	..	..	..	..	D	D	D	D	D	D	D	D

"C" indicates voltage rating at either 500 or 700 volts.
"D" indicates voltage rating at 700 volts, only.

Suggested Standard for Future Design 5-24-1960, revised 7-12-1961, NEMA Standard 11-15-1962, revised 3-21-1973; 1-10-1978.

Not for Resale

Copyright National Electrical Manufacturers Association
Provided by IHS under license with NEMA
No reproduction or networking permitted without license from IHS
Not for Resale

MG 1-23.11 Speed Ratings by Field Control for 250-volt Direct-current Motors

Speed ratings by field control may vary between the base speed and the speeds listed in Tables 23-3 and 23-4.

TABLE 23-3 ▲

GENERAL INDUSTRIAL MOTORS (SEE MG 1-23.01) AND METAL ROLLING MILL MOTORS, CLASS N (SEE MG 1-23.02)

	Base Speed, Rpm													
	650	500	450	400	350	300	250	225	200	175	150	125	110	100
Hp	Speed by Field Control, Rpm—Nonreversing Service†													
250	...	...	...	...	...	...	...	...	...	725	660	585	540	510
300	...	...	...	...	...	...	...	820	760	700	630	560	520	490
400	...	...	...	...	...	910	810	765	710	650	595	525	490	460
500	...	...	...	...	930	855	765	720	670	615	565	500	465	440
600	...	...	990	940	880	805	725	690	640	590	540	480	445	425
700	...	975	935	890	830	765	690	655	615	560	515	460	430	410
800	...	925	890	840	795	735	660	630	590	540	500	450	420	395
900	1000	875	845	800	760	700	630	605	570	525	480	435	405	385
1000	965	840	800	770	725	675	615	585	550	505	460	420	395	370

TABLE 23-4 ▲

METAL ROLLING MILL MOTORS, CLASS S (SEE MG 1-23.02)

	Base Speed, Rpm													
	650	500	450	400	350	300	250	225	200	175	150	125	110	100
Hp	Speed by Field Control, Rpm—Nonreversing Service†													
250	...	...	...	...	...	...	...	...	...	850	775	690	640	600
300	...	...	...	...	...	...	...	960	890	820	745	660	615	580
400	...	...	...	...	...	1060	950	890	830	765	695	620	575	545
500	...	...	...	...	1075	990	890	840	785	720	660	590	550	520
600	...	...	1135	1080	1010	930	840	800	745	690	630	565	525	500
700	...	1105	1070	1020	960	885	800	760	715	660	600	540	505	480
800	...	1040	1010	960	910	840	765	730	685	630	580	525	490	465
900	1110	985	950	915	870	805	735	700	660	610	560	510	475	450
1000	1050	935	905	870	830	775	710	675	640	590	540	490	460	435

NOTE—The speeds indicated in the above tables take into consideration both electrical and mechanical limitations. Operation at speeds above those indicated by increasing the armature voltage is not recommended.*

* Approved as Authorized Engineering Information.

† Speed ratings by field control of motors designed for reversing service (operation with either direction of rotation) may vary between the base speed and a speed equal to 90 percent of the value listed in the table.

Suggested Standard for Future Design 5-24-1960, revised 7-12-1961, NEMA Standard 11-17-1962, revised 1-10-1978.

▲ Revised.

Copyright National Electrical Manufacturers Association
Provided by IHS under license with NEMA
No reproduction or networking permitted without license from IHS
Not for Resale

MG 1-23.12 Speed Ratings by Field Control for 500- or 700-volt Direct-current Motors

Speed ratings by field control may vary between the base speed and the speeds listed in Tables 23-5, 23-6 and 23-7. (See MG 1-23.10 for the voltage ratings for the horsepower ratings listed.)

TABLE 23-5
GENERAL INDUSTRIAL MOTORS (SEE MG 1-23.01) AND METAL ROLLING MILL MOTORS, CLASS N (SEE MG 1-23.02)

	Base Speed, Rpm																					
	850	650	500	450	400	350	300	250	225	200	175	150	125	110	100	90	80	70	65	60	55	50
Hp	Speed by Field Control, Rpm—Nonreversing Service*																					
250	...	...	...	...	...	...	1140	1030	960	890	820	730	645	590	550	...	...	...	...	...	...	...
300	...	...	...	...	...	1190	1090	990	920	855	790	700	620	570	530	...	...	...	...	...	...	...
400	...	...	1290	1250	1200	1110	1020	920	860	800	735	655	580	540	500	...	...	...	...	...	...	...
500	...	1400	1220	1170	1110	1040	960	870	810	750	700	625	550	510	480	450	...	...	...	...	...	...
600	...	1330	1160	1120	1060	980	910	830	775	720	660	590	530	490	455	430	400	...	...	...	...	...
700	1370	1270	1110	1065	1010	940	870	790	740	690	640	570	510	470	440	415	385	350	...	...	...	...
800	1320	1220	1070	1020	970	900	830	760	710	660	610	550	490	450	425	400	370	340	315	300	...	...
900	1270	1170	1030	980	930	870	805	730	690	640	590	530	475	440	410	385	360	330	305	285	260	...
1000	1220	1130	990	950	900	840	780	710	660	620	570	515	460	425	400	375	350	320	295	275	255	240
1250	1115	1030	920	870	830	770	720	660	620	575	530	480	430	400	385	350	330	300	280	260	240	225
1500	1030	960	850	810	770	720	670	610	580	540	500	450	410	380	355	330	310	285	265	250	230	215
1750	960	900	800	760	720	670	630	575	540	510	475	430	385	360	340	315	300	270	250	235	220	205
2000	...	840	750	720	675	630	590	540	515	485	450	410	370	340	320	300	285	260	240	225	210	200
2250	...	795	710	680	640	600	560	515	490	460	430	390	350	330	310	290	275	250	230	220	205	195
2500	...	750	675	650	600	570	535	490	470	440	410	370	340	315	300	280	260	240	225	210	200	190
3000	...	...	610	585	540	510	490	450	430	405	380	340	315	295	280	260	245	225	210	200	190	180
3500	...	...	...	530	490	470	445	410	395	380	350	320	295	275	260	245	230	210	200	190	180	170
4000	...	...	...	...	450	430	410	380	365	350	330	300	275	260	250	235	220	200	190	180	170	160
4500	...	...	...	...	...	390	380	355	340	330	310	285	260	245	235	220	205	190	180	170	165	155
5000	...	...	...	...	...	...	350	330	320	310	290	270	250	235	225	210	195	180	170	165	160	150
6000	...	...	...	...	...	...	...	...	...	...	260	240	225	210	205	190	180	165	155	150	145	140
7000	...	...	...	...	...	...	...	...	...	...	...	220	205	195	190	175	165	155	145	140	135	130
8000	...	...	...	...	...	...	...	...	...	...	...	...	190	180	170	160	150	140	135	130	128	125

* Speed ratings by field control of motors designed for reversing service (operation with either direction of rotation) may vary between the base speed and a speed equal to 90 percent of the value listed in the table.
NOTE—The speeds indicated in Table 23-5 take into consideration both electrical and mechanical limitations. Operation at speeds above those indicated by increasing the armature voltage is not recommended.

(*Continued*)

9009279 0003925 099

Copyright National Electrical Manufacturers Association
Provided by IHS under license with NEMA
No reproduction or networking permitted without license from IHS
Not for Resale

9009279 0003926 T25

TABLE 23-6
METAL ROLLING MILL MOTORS, CLASS S (SEE MG 1-23.02.)

	Base Speed, Rpm																				
	850	650	500	450	400	350	300	250	225	200	175	150	125	110	100	90	80	70	65	60	55	50
Hp	Speed by Field Control, Rpm—Nonreversing Service*																					
250	...	...	...	...	...	...	1340	1200	1130	1050	965	860	760	700	650	...	...	...	...	...	...	...
300	...	...	...	...	...	1390	1280	1160	1085	1010	930	825	730	675	625	...	...	...	...	...	...	...
400	...	...	1480	1440	1390	1290	1200	1075	1010	940	860	775	680	635	590	...	...	...	...	...	...	...
500	...	1590	1400	1350	1310	1210	1120	1020	950	880	820	735	650	600	565	525	...	...	...	...	...	...
600	...	1500	1320	1280	1220	1130	1060	965	905	840	775	695	620	575	535	505	470	...	...	...	...	...
700	1510	1420	1260	1210	1160	1085	1010	915	860	805	740	670	600	550	515	490	455	410	...	...	...	...
800	1460	1330	1215	1160	1110	1030	960	880	825	770	710	645	575	530	500	470	435	400	370	350	...	...
900	1400	1310	1165	1110	1060	1000	930	850	800	745	685	620	555	515	480	450	420	390	360	335	310	...
1000	1330	1260	1120	1080	1025	960	900	820	765	720	660	600	540	500	470	435	400	375	350	325	300	275
1250	1210	1140	1040	1020	1000	875	825	765	715	670	615	560	500	470	450	410	385	350	325	300	285	265
1500	1100	1050	950	920	870	820	765	700	670	625	580	525	475	440	415	385	365	335	310	295	270	255
1750	1030	980	885	850	810	755	720	660	620	585	550	500	445	415	395	365	350	315	295	275	260	240
2000	...	910	830	800	755	720	670	625	590	555	520	475	430	395	370	350	330	300	285	265	245	235
2250	...	855	785	750	715	670	635	585	560	525	490	450	405	380	360	335	320	290	270	255	240	230
2500	...	800	740	710	665	635	600	550	530	500	465	425	390	365	345	325	300	280	260	245	235	220
3000	...	...	660	635	590	565	540	510	485	460	430	390	360	340	325	300	280	260	245	230	220	210
3500	...	...	...	570	530	515	490	460	445	430	395	365	335	315	300	285	265	240	230	220	210	200
4000	...	...	...	...	480	465	450	420	405	395	370	335	310	295	285	270	250	230	220	210	195	185
4500	...	...	...	...	...	420	410	390	375	355	340	320	295	280	270	250	235	220	205	195	190	180
5000	...	...	...	...	...	...	370	360	350	340	320	300	280	265	255	240	225	210	195	190	185	175
6000	...	...	...	...	...	...	...	...	...	...	285	265	250	240	230	215	205	190	180	170	165	160
7000	...	...	...	...	...	...	...	...	...	...	...	240	230	220	215	195	185	175	165	160	155	150
8000	...	...	...	...	...	...	...	...	...	...	...	...	210	200	190	180	170	160	155	150	145	140

* Speed ratings by field control of motors designed for reversing service (operation with either direction of rotation) may vary between the base speed and a speed equal to 90 percent of the value listed in the table.

TABLE 23-7
REVERSING HOT MILL MOTORS (SEE MG 1-23.03)

	Base Speed, Rpm																
	200	175	150	125	110	100	90	80	70	65	60	55	50	45	40	35	30
	Speed by Field Control, Rpm																
	400	350	300	250	220	200	180	160	140	130	120	110	100	90	80	70	60

Suggested Standard for Future Design 5-24-1960, revised 7-12-1961, NEMA Standard 11-15-1962.

NOTE—The speeds indicated in Tables 23-6 and 23-7 take into consideration both electrical and mechanical limitations. Operation at speeds above those indicated by increasing the armature voltage is not recommended.

Copyright National Electrical Manufacturers Association
Provided by IHS under license with NEMA
No reproduction or networking permitted without license from IHS
Not for Resale

TESTS AND PERFORMANCE

MG 1-23.40 Temperature Rise▲

The observable temperature rise under rated load conditions of each of the various parts of the motor, above the temperature of the cooling air, shall not exceed the values given in the following table. The temperature of the cooling air* is the temperature of the external air as it enters the ventilating openings of the machine, and the temperature rises given in the table are based on a maximum temperature of 40°C for this external air. Temperatures shall be determined in accordance with the latest revision of IEEE Std 113, *Test Code for Direct-current Machines.*

OBSERVABLE TEMPERATURE RISES, DEGREES C

Item	Machine Part	Method of Temperature Determination†	General Industrial Service								Metal Rolling Mill Service								
			Semi-enclosed				Totally-enclosed				Metal Rolling Mills, Excluding Reversing Hot Mills						Reversing Hot Mills		
			Continuous Rated 100% Load				Continuous Rated 100% Load				Forced-ventilated or Totally-enclosed Water-air-cooled						Forced-ventilated or Totally-enclosed Water-air-cooled		
											Continuous Rated 100% Load			2 Hours‡ 125% Load			Continuous Rated 100% Load		
			Insulation Class				Insulation Class				Insulation Class			Insulation Class			Insulation Class		
			A	B	F	H	A	B	F	H	B	F	H	B	F	H	B	F	H
1	Armature windings and all other windings other than those given in items 2 and 3	Thermometer	50	70	90	110	55	75	95	115	40	60	75	55	75	95	50	70	90
		Resistance	70	100	130	155	70	100	130	155	60	90	110	80	110	135	70	100	130
2	Multilayer field windings	Resistance	70	100	130	155	70	100	130	155	70	100	120	80	110	135	70	100	130
3	Single-layer field windings with exposed uninsulated surfaces and bare copper windings	Thermometer	60	80	105	130	65	85	110	135	50	70	90	65	85	110	60	80	105
		Resistance	70	100	130	155	70	100	130	155	60	90	110	80	110	135	70	100	130
4	Commutator and collector rings	Thermometer	65	85	105	125	65	85	105	125	55	75	90	65	85	105	65	85	105
5	Cores, pole tips and miscellaneous parts, such as brushholders, brushes, etc., may attain such temperatures as will not injure the machine in any respect.																		

* For totally-enclosed water-air-cooled machines, the temperature of the cooling air is the temperature of the air leaving the coolers. With a cooling water temperature not exceeding that for which the machine is designed:
1. On machines designed for cooling water temperatures up to 30°C—The temperature of the air leaving the coolers shall not exceed 40°C.
2. On machines designed for higher cooling water temperatures—the temperature of the air leaving the coolers may exceed 40°C provided the temperature rises of the machine parts are then limited to values less than those given in the table by the number of degrees that the temperature of the air leaving the coolers exceeds 40°C.

† Where two methods of temperature measurement are listed, a temperature rise within the values listed in the table measured by either method demonstrates conformity with the standard.

‡ Temperature limits apply at end of 2-hour operation at 125 percent load following operation at rated load long enough to reach a stable temperature.

NOTE I—Totally-enclosed water-air-cooled machines are normally designed for the maximum cooling water temperature encountered at the location where each machine is to be installed.

NOTE II—For motors which operate under prevailing barometric pressure and which are designed not to exceed the specified temperature rise at altitudes from 3300 feet (1000 meters) to 13000 feet (4000 meters), the temperature rises, as checked by tests at low altitudes, shall be less than those listed in the foregoing table by 1 percent of the specified temperature rise for each 330 feet (100 meters) of altitude in excess of 3300 feet (1000 meters).

NEMA Standard 5-24-1960, revised 11-15-1962; 8-20-1966; 7-16-1975; 1-10-1978.

NOTE III—See MG 1-1.65 for description of classes of insulation.

NOTE IV—Abnormal deterioration of insulation may be expected if the ambient temperature of 40°C is exceeded in regular operation.

Authorized Engineering Information 5-24-1960.

▲ Revised.

9009279 0003927 961

9009279 0003928 8T8

MG 1-23.41 Overload Capability

A. General Industrial Motors

These motors shall be capable of carrying, with successful commutation, the following momentary (1-minute) loads:

Percent of Base Speed†	Percent of Rated Horsepower Load	
	Occasionally Applied*	Frequently Applied*
100	150	140
200	150	130
300 or over	140	125

These motors have no continuous overload capability.

B. Metal Rolling Mill Motors (Excluding Reversing Hot Mill Motors)—Open, Forced-ventilated, and Totally-enclosed Water-air-cooled

These motors shall be capable of carrying, with successful commutation, the following loads:

1. 115 percent of rated horsepower load continuously at rated voltage throughout the rated speed range. Under this load, the temperature rises will be higher and other characteristics may differ from those specified for operation under rated conditions.
2. 125 percent of rated horsepower load for 2 hours at rated voltage throughout the rated speed range, following continuous operation at rated load, without exceeding the temperature rises specified in MG 1-23.40 for this operating condition. Other characteristics may differ from those specified for operation under rated conditions.
3. The following momentary (1-minute) loads:

Percent of Base Speed†	Percent of Rated Horsepower Load	
	Occasionally Applied*	Frequently Applied*
100	200	175
200	200	160
300 or over	175	140

* See MG 1-23.42.
† At intermediate speeds the variation in momentary load capability is linear with respect to speed.
‡ Approximate speed attained at load shown with motor field adjusted for 100 percent base speed at 100 percent load.

C. Reversing Hot Mill Motors—Forced-ventilated and Totally-enclosed Water-air-cooled

These motors shall be capable of carrying, with successful commutation, the following momentary (1-minute) loads:

Percent of Base Speed	Occasionally Applied Load*		Frequently Applied Load*	
	Percent of Rated Base Speed Torque	Percent of Rated Horsepower	Percent of Rated Base Speed Torque	Percent of Rated Horsepower
93‡	275	256	...	...
95‡	...	...	225	214
125	199	248.5	166	207.5
150	162	242.5	135	202
175	135	236.5	112	196.5
200	115	230	95.5	191
225	99.5	224	82.5	185.5
250	87.5	218	72	180
275	77	212	63.5	174.5
300	68.5	206	56.3	169

These motors have no continuous overload capability.

Recommended Standard 1-23-1951, NEMA Standard 11-12-1954, revised 11-15-1962; 7-16-1975.

MG 1-23.42 Momentary Load Capacity

Occasionally-applied momentary load capacity denotes the ability of a motor to carry loads in excess of its continuous rating for a period not to exceed 1 minute on an infrequent or emergency basis. It is recommended that the circuit breaker instantaneous trip setting correspond to the occasionally-applied momentary load capacity.

Frequently-applied momentary load capacity denotes the ability of the motor to carry loads in excess of its rating on a repetitive basis, such as a part of a regular duty cycle.

Operation at the momentary load capacity must be followed by light load operation such that the rms load value of the complete load cycle does not exceed the continuous motor rating. Also, the time of operation at momentary load capacity must be limited to a period such that the rated temperature rise is not exceeded.

Authorized Engineering Information 1-23-1951.

Copyright National Electrical Manufacturers Association
Provided by IHS under license with NEMA
No reproduction or networking permitted without license from IHS
Not for Resale

9009279 0003929 734

MG 1-23.43 Successful Commutation

Successful commutation is attained if neither the brushes nor the commutator are burned or injured in the conformance test or in normal service to the extent that abnormal maintenance is required. The presence of some visible sparking is not necessarily evidence of unsuccessful commutation.

NEMA Standard 11-15-1962, revised 3-10-1966.

MG 1-23.44 Efficiency

Efficiency and losses shall be determined in accordance with IEEE Std 113, *Test Code for Direct-current Machines.* The efficiency shall be determined at rated output, voltage and speed. In the case of adjustable-speed motors, the base speed shall be used unless otherwise specified.

The following losses shall be included in determining the efficiency:

1. I^2R loss or armature.
2. I^2R loss of series windings.
3. I^2R loss of shunt field.
4. Core loss.
5. Stray load loss.
6. Brush contact loss.
7. Brush friction loss.
8. Exciter loss if exciter is supplied with and driven from the shaft of the machine.
9. Ventilating loss.
10. Friction and windage loss.*

* In the case of motors furnished with thrust bearings, only that portion of the thrust bearing loss produced by the motor itself shall be included in the efficiency calculation. Alternatively, a calculated value of efficiency, including bearing loss due to external thrust load, may be specified.

In the case of motors furnished with less than a full set of bearings, friction and windage losses which are representative of the actual installation shall be determined by (1) calculation or (2) experience with shop test bearings and shall be included in the efficiency calculations.

In determining I^2R losses, the resistance of each winding shall be corrected to a temperature equal to an ambient temperature of 25°C plus the observed rated load temperature rise measured by resistance. Where the rated load temperature rise has not been measured, the resistance of the winding shall be corrected to the following temperature:

Class of Insulation System†	Temperature, Degrees C
A	85
B	110
F	135
H	155

† Where the rated temperature rise is that of a lower class of insulation system (e.g., motors for metal rolling mill service), the temperature used for resistance correction shall be that of the lower insulation class.

NEMA Standard 11-15-1962, revised 3-21-1973; 1-5-1977.

MG 1-23.45 Typical Reversal Time of Reversing Hot Mill Motors

The maximum time typically required for reversing hot mill motors to reverse their direction of rotation, when operating at no load and with suitable control and power supply, is given in the following table:

Motor Speed (Forward and Reverse), Percent of Base Speed	Reversal Time, Seconds
Horsepower × base speed (rpm) not over 250,000 and speed ratio not over 2:1	
100	1.5
150	2.5
200	4
Horsepower × base speed (rpm) over 250,000 or speed ratio over 2:1	
100	2
150	3
200	5
240	7
300	12

Authorized Engineering Information 11-15-1962.

MG 1-23.46 Impact Speed Drop of a Direct-current Motor

The impact speed drop of a direct-current motor is defined as the initial transient speed drop (from the time of impact to the first point of zero slope on the transient speed-time curve), expressed as a percentage of the speed prior to the speed change, when full load is suddenly applied under conditions of fixed line and shunt field excitation voltages while the motor is operating at no load and rated voltage with shunt field excitation required to produce rated base speed at rated load and rated voltage.

NOTE—In actual operation, the resultant speed drop of the motor is affected by the stability of the applied voltage, the added inertia of the connected load and the operation of any control equipment.

NEMA Standard 5-17-1953, revised 11-15-1962.

MG 1-23.47 Overspeed ▲

Direct-current motors shall be so constructed that, in an emergency, not to exceed 1 minute, they will withstand an overspeed of 25 percent above rated full-load speed without mechanical injury.

NEMA Standard 11-13-1952, revised 11-15-1962; 9-15-1983.

MG 1-23.47.a Variation from Rated Voltage

A. Steady State

Direct-current motors covered by this Part 23 shall operate successfully at rated load up to and including 110 percent of rated direct-current armature and/or field voltage provided the maximum speed is not exceeded.

Performance within this voltage variation will not necessarily be in accordance with the standards established for operation at rated voltage. For operation below base speed at reduced armature voltage, see MG 1-23.82. (This paragraph is approved as Authorized Engineering Information.)

▲ Revised.

Copyright National Electrical Manufacturers Association
Provided by IHS under license with NEMA
No reproduction or networking permitted without license from IHS
Not for Resale

9009279 0003930 456

B. TRANSIENT VOLTAGES OF MICROSECOND DURATION

Direct-current motors shall withstand transient peak voltages of 160 percent of rated voltage for repetitive transients and 200 percent of rated voltage for random transients.

NEMA Standard 1-25-1973, revised 1-5-1977.

MG 1-23.48 Field Data for Direct-current Motors

The following data for direct-current motors may be required by the control manufacturer:

1. Manufacturer's name.
2. Requisition or order number.
3. Frame designation.
4. Serial number.
5. Horsepower output.
6. Shunt or compound-wound.
7. Rated speed in rpm.
8. Rated voltage.
9. Rated current.
10. Excitation voltage.
11. Resistance of shunt field at 25°C.
12. Field amperes to obtain:

100% speed at full load.... _____
_____ speed at full load.... _____
200% speed at full load.... _____
_____ speed at full load.... _____
300% speed at full load.... _____
400% speed at full load.... _____
_____ speed at full load.... _____

NOTE—The above table is to be followed only up to the speed that agrees with the maximum speed rating of the motor.

Indicate if values given are calculated or taken from tests.

Authorized Engineering Information 11-15-1962.

MG 1-23.49 Routine Tests

1. Measurement of resistance of all windings.
2. Potential drop and polarity of field coils.
3. Brush setting.
4. Commutation adjustment.
5. Speed-limit-switch adjustment.
6. Air gap measurement.
7. High-potential test in accordance with MG 1-23.50.

All tests shall be made in accordance with the latest revision of IEEE Std 113, *Test Code for Direct-current Machines.*

NEMA Standard 11-13-1952, revised 11-15-1962.

MG 1-23.50 High-potential Test

A. SAFETY PRECAUTIONS AND TEST PROCEDURE

See MG 1-3.01.

B. TEST VOLTAGE

The test voltage shall be an alternating voltage whose effective value is 1000 volts plus twice the rated voltage of the machine.

NEMA Standard 11-13-1952, revised 11-15-1962; 1-5-1977.

MG 1-23.51 Balance of Machines

The balance for direct-current motors covered by this Part 23, when measured in accordance with MG 1-23.52, shall not exceed the following:

Speed, Rpm	Maximum Amplitude, Inches, Peak to Peak
3000 and above	0.001
1500–2999, incl.	0.002
1000–1499, incl.	0.0025
999 and below	0.003

NEMA Standard 7-16-1969.

MG 1-23.52 Method of Measuring the Motor Vibration

The measurements shall be taken while the machine is mounted on a foundation whose natural frequency is removed by at least 25 percent from the rotational exciting frequency.

A reliable vibration indicator shall be used.

The amplitude of vibration shall be measured on the bearing housing, in any direction, with the axis of the shaft in the normal position. With the machine operating at no load, it shall be balanced with one half a standard key in the keyseat; that is, a key of full length flush with the top of the keyseat. A direct-current machine shall be run at the highest rated speed.

Series motors shall be checked at rated operating speed.

NEMA Standard 7-16-1969.

MG 1-23.53 Conditions of Test for Speed Regulation

For conditions of test for speed regulation, see the latest revision of IEEE Std 113, *Test Code for Direct-current Machines.*

NEMA Standard 3-21-1973.

MANUFACTURING

MG 1-23.60 Nameplate Marking

The following minimum amount of information shall be given on all nameplates. For abbreviations, see MG 1-1.80.

1. Manufacturer's name and serial number or other suitable identification.
2. Horsepower output.
3. Time rating.
4. Temperature rise.*
5. Rpm at rated load.
6. Voltage.
7. Amperes at rated load.
8. Winding—shunt, compound or series.

* As an alternate marking, this item may be replaced by the following:
1. Maximum ambient temperature for which the motor is designed.
2. Insulation system designation (if field and armature use different classes of insulation systems, both insulation systems shall be given, that for the field being given first).

NEMA Standard 11-15-1962, revised 11-8-1973.

Copyright National Electrical Manufacturers Association
Provided by IHS under license with NEMA
No reproduction or networking permitted without license from IHS
Not for Resale

9009279 0003931 392

APPLICATION DATA

MG 1-23.80 Service Conditions

A. General

Motors should be properly selected with respect to their service conditions, usual or unusual, both of which involve the environmental conditions to which the machine is subjected and the operating conditions. Machines conforming to Part 23 of this publication are designed for operation in accordance with their ratings under usual service conditions. Some machines may also be capable of operating in accordance with their ratings under one or more unusual service conditions. Definite-purpose or special-purpose machines may be required for some unusual conditions.

Service conditions, other than those specified as usual, may involve some degree of hazard. The additional hazard depends upon the degree of departure from usual operating conditions and the severity of the environment to which the machine is exposed. The additional hazard results from such things as overheating, mechanical failure, abnormal deterioration of the insulation system, corrosion, fire and explosion.

Although past experience of the user may often be the best guide, the manufacturer of the driven equipment and the motor manufacturer should be consulted for further information regarding any unusual service conditions which increase the mechanical or thermal duty on the machine and, as a result, increase the chances for failure and consequent hazard. This further information should be considered by the user, his consultants, or others most familiar with the details of the application involved when making the final decision.

B. Usual Service Conditions

1. An ambient temperature not less than 10°C nor more than 40°C.
2. An altitude not exceeding 3300 feet (1000 meters).
3. A location or supplementary enclosures, if any, such that there is no serious interference with the ventilation of the motor.

C. Unusual Service Conditions

The manufacturer should be consulted if any unusual service conditions exist which may affect the construction or operation of the motor. Among such conditions are:

1. Exposure to:
   a. Combustible, explosive, abrasive or conducting dusts.
   b. Lint or very dirty operating conditions where the accumulation of dirt will interfere with normal ventilation.
   c. Chemical fumes, flammable or explosive gases.
   d. Nuclear radiation.
   e. Steam, salt-laden air, or oil vapor.
   f. Damp or very dry locations, radiant heat, vermin infestation, or atmospheres conducive to the growth of fungus.
   g. Abnormal shock, vibration, or mechanical loading from external sources.
   h. Abnormal axial or side thrust imposed on the motor shaft.
2. Operation where:
   a. There is excessive departure from rated voltage (see MG 1-23.47.a).
   b. Low noise levels are required.
3. Operation at:
   a. Speeds above highest rated speed.
   b. Standstill with any winding continuously energized.
4. Operation in a poorly ventilated room, in a pit, or in an inclined position.
5. Operation where subjected to:
   a. Torsional impact loads.
   b. Repetitive abnormal overloads.

Authorized Engineering Information 11-15-1962, revised 7-15-1970; 1-25-1973.

MG 1-23.81 Operation of Direct-current Motors on Rectified Alternating Current

A. When a direct-current motor is operated from a rectified alternating-current supply, its performance may differ materially from that of the same motor when operated from a direct-current source of supply having the same effective value of voltage. At the same load, its temperature rise, speed regulation, and noise level may be increased, and successful commutation may not be achieved. The degree of difference will depend upon the effect of the rectified voltage on the motor current and is more likely to be significant when the rectifier pulse number is less than 6 and/or the amount of phase control is more than 15 percent.

B. If the power supply for a direct-current motor has a continuous pulsation or ripple in its output voltage, a similar ripple will appear in the motor armature current. The performance standards for direct-current motors in Part 23 are based on operation from a direct-current source of supply, such as a generator or battery, and do not necessarily apply if the magnitude of the ripple current (peak-to-peak), expressed in percent of rated load current, exceeds six percent at rated load, rated armature voltage and rated base speed.

The inductance of the motor armature winding is a major component of the impedance limiting the flow of ripple current. The approximate inductance in henries can be calculated from the formula:

$$L_a = \frac{19.1 \times V_a}{P_z N_1 \times I_a} \times C_z$$

Copyright National Electrical Manufacturers Association
Provided by IHS under license with NEMA
No reproduction or networking permitted without license from IHS
Not for Resale

9009279 0003932 229

where

L_a = Armature circuit inductance in henries.
V_c = Rated motor voltage in volts.
P = Number of poles.
N_1 = Base speed in rpm.
I_a = Rated motor current in amperes.
C_x = Per unit value of armature circuit reactance at base speed frequency. (Typically, the armature circuit reactance, at base speed frequency, has a per unit value which will equal or exceed 0.1 for motors having compensating windings and 0.4 for motors without compensating windings.)

C. When a direct-current motor is operated from some unfiltered rectifier power supplies, bearing currents may result. Ripple currents, transmitted by capacitive coupling between the rotor winding and core, may flow to ground. While these currents are small in magnitude, they may cause damage to either antifriction or sleeve bearings under certain circumstances. It is recommended that manufacturers be consulted to determine whether bearing currents may be a problem and, if so, what measures can be taken to minimize them.

Authorized Engineering Information 11-15-1962, revised 7-17-1963; 9-25-1963; 11-17-1966.

MG 1-23.82 Operation of Direct-current Motors Below Base Speed by Reduced Armature Voltage

When a direct-current motor is operated below base speed by reduced armature voltage, it may be necessary to reduce its torque load below rated full-load torque to avoid overheating of the motor.

Authorized Engineering Information 11-15-1962.

MG 1-23.83 Rate of Change of Load Current

Direct-current motors can be expected to operate successfully with repetitive changes in load current such as those which occur during a regular duty cycle provided that, for each change in current, the factor K, as defined in the following formula, does not exceed 15.

In the formula, the equivalent time for the current change to occur is the time which would be required for the change if the current increased or decreased at a uniform rate equal to the maximum rate at which it actually increases or decreases (neglecting any high-frequency ripple).

$$K = \frac{(\text{Change in current/rated load current})^2}{\text{Equivalent time in seconds for current change to occur}}$$

Authorized Engineering Information 3-10-1966.

Copyright National Electrical Manufacturers Association
Provided by IHS under license with NEMA
No reproduction or networking permitted without license from IHS
Not for Resale

9009279 0003933 165

SECTION III

LARGE APPARATUS

Part 24. DC Generators

The standards in this Part 24 of Section III cover direct-current generators built in frames larger than that having a continuous dripproof rating, or equivalent capacity, of 1.0 kilowatt per rpm, open type.

Copyright National Electrical Manufacturers Association
Provided by IHS under license with NEMA
No reproduction or networking permitted without license from IHS
Not for Resale

9009279 0003934 0T1

MG 1-24.41 Overload Capability

A. GENERAL INDUSTRIAL GENERATORS

These generators shall be capable of carrying, with successful commutation, a load of 150 percent of rated load amperes for 1 minute with the rheostat set for rated load excitation and with no temperature rise specified.

These generators have no continuous overload capability.

B. METAL ROLLING MILL GENERATORS (EXCLUDING REVERSING HOT MILL GENERATORS)—OPEN, FORCED-VENTILATED, AND TOTALLY-ENCLOSED WATER-AIR-COOLED

These generators shall be capable of carrying, with successful commutation, the following loads:

1. 115 percent of rated current continuously, when operating at rated speed and rated or less than rated voltage, with no temperature rise specified.
2. 125 percent of rated current for 2 hours, at rated speed and rated or less than rated voltage, following continuous operation at rated load without exceeding the temperature rises specified in MG 1-24.40 for this operating condition.
3. 200 percent of rated load amperes for 1 minute with the rheostat set for rated load or lower excitation and with no temperature rise specified.

C. REVERSING HOT MILL GENERATORS—FORCED-VENTILATED AND TOTALLY-ENCLOSED WATER-AIR-COOLED

These generators shall be capable of carrying, with successful commutation, a load of 275 percent of rated load amperes for 1 minute with the rheostat set for rated load excitation and with no temperature rise specified. These generators have no continuous overload capability.

NEMA Standard 6-11-1946, revised 11-15-1962; 1-15-1963; 7-16-1975.

MG 1-24.42 Successful Commutation

Successful commutation is attained if neither the brushes nor the commutator are burned or injured in the conformance test or in normal service to the extent that abnormal maintenance is required. The presence of some visible sparking is not necessarily evidence of unsuccessful commutation.

NEMA Standard 11-12-1959, revised 3-10-1966.

MG 1-24.43 Output at Reduced Voltage

When operated at less than rated voltage, generators shall carry load currents equal to those corresponding to their kilowatt and voltage ratings.

NEMA Standard 11-15-1962.

▲ Revised.

MG 1-24.44 Efficiency

Efficiency and Losses shall be determined in accordance with IEEE Std 113, *Test Code for Direct-current Machines.* The efficiency shall be determined at rated output, voltage and speed.

The following losses shall be included in determining the efficiency:

1. I^2R loss of armature.
2. I^2R loss of series windings.
3. I^2R loss of shunt field.
4. Core loss.
5. Stray load loss.
6. Brush contact loss.
7. Brush friction loss.
8. Exciter loss if exciter is supplied with and driven from the shaft of the machine.
9. Friction and windage loss.*

* In the case of generators furnished with thrust bearings, only that portion of the thrust bearing loss produced by the generator itself shall be included in the efficiency calculation. Alternatively, a calculated value of efficiency, including bearing loss due to external thrust load, may be specified.

In the case of generators furnished with less than a full set of bearings, friction and windage losses which are representative of the actual installation shall be determined by (1) calculation or (2) experience with shop test bearings and shall be included in the efficiency calculations.

In determining I^2R losses, the resistance of each winding shall be corrected to a temperature equal to an ambient temperature of 25°C plus the observed rated load temperature rise measured by resistance. Where the rated load temperature rise has not been measured, the resistance of the winding shall be corrected to the following temperature:

Class of Insulation System†	Temperature, Degrees C
A	85
B	110
F	135
H	155

† Where the rated temperature rise is that of a lower class of insulation system (e.g., generators for metal rolling mill service), the temperature used for resistance correction shall be that of the lower insulation class.

NEMA Standard 11-15-1962, revised 3-21-1973; 1-5-1977.

MG 1-24.45 Overspeed▲

Direct-current generators shall be so constructed that, in an emergency, not to exceed 1 minute, they will withstand an overspeed of 25 percent without mechanical injury.

NEMA Standard 11-13-1952, revised 11-15-1962; 9-15-1983.

Copyright National Electrical Manufacturers Association
Provided by IHS under license with NEMA
No reproduction or networking permitted without license from IHS
Not for Resale

9009279 0003935 T38

MG 1-24.46 Field Data for Direct-current Generators

The following field data for direct-current generators may be required by control manufacturers:

1. Manufacturer's name.
2. Requisition or order number.
3. Frame designation.
4. Serial number.
5. kW output.
6. Shunt or compound-wound.
7. Rated speed in rpm.
8. Rated voltage.
9. Rated current.
10. Excitation voltage, or self-excited.
11. Resistance of shunt field at 25 °C.
12. Recommended value of resistance for rheostat for hand or regulator control.
13. N.L. saturation.

	Percent Rated Armature Voltage	Field Current Amperes
Max. field rheostat out		
	100	
	50	
Shunt field current at rated voltage and load		

Authorized Engineering Information 11-15-1962.

MG 1-24.47 Routine Tests

1. Field current at no load, rated voltage and rated speed.
2. Field current at rated load, rated voltage and rated speed (commutation to be observed).
3. Voltage regulation curve.
4. High-potential tests in accordance with MG 1-24.48.

All tests shall be made in accordance with the latest revision of IEEE Std 113, *Test Code for Direct-current Machines.*

Recommended Standard 10-29-1943, revised 6-24-1949, NEMA Standard 11-12-1953, revised 11-15-1962.

MG 1-24.48 High-potential Tests

A. SAFETY PRECAUTIONS AND TEST PROCEDURE

See MG 1-3.01.

B. TEST VOLTAGE

The test voltage shall be an alternating voltage whose effective value is 1000 volts plus twice the rated voltage of the machine.

NEMA Standard 6-4-1948; revised 11-15-1962; 1-5-1977.

MG 1-24.49 Conditions of Tests for Voltage Regulation

For conditions of tests for voltage regulation, see the latest revision of IEEE Std 113, *Test Code for Direct-current Machines.*

NEMA Standard 11-15-1962.

MG 1-24.50 Balance of Machines

The balance for direct-current generators covered by this Part 24, when measured in accordance with MG 1-23.52, shall not exceed the following:

Speed, Rpm	Maximum Amplitude, Inches, Peak to Peak
3000 and above	0.001
1500–2999	0.002
1000–1499	0.0025
999 and below	0.003

NEMA Standard 7-16-1969.

Copyright National Electrical Manufacturers Association
Provided by IHS under license with NEMA
No reproduction or networking permitted without license from IHS
Not for Resale

9009279 0003936 974

MANUFACTURING

MG 1-24.61 Nameplate Marking

The following minimum amount of information shall be given on all nameplates. For abbreviations, see MG 1-1.80.

1. Manufacturer's name and serial number or other suitable identification.
2. Kilowatt output.
3. Time rating (see MG 1-24.40).
4. Temperature rise for rated continuous load.*
5. Overload.‡
6. Time rating of overload.‡
7. Temperature rise for overload.*‡
8. Rated speed in rpm.
9. Voltage rating.†
10. Rated current in amperes.
11. Winding—series, shunt, or compound.

* As an alternate marking, this item may be replaced by the following:

1. Maximum ambient temperature for which the generator is designed.
2. Insulation system designation (if field and armature use different classes of insulation systems, both insulation systems shall be given, that for the field being given first).

† Both rated load and no-load voltage to be given for compound-wound generators.

‡ Applies only to generators having overload capabilities for which temperature rises are given.

NEMA Standard 10-29-1943, revised 11-15-1962; 11-8-1973.

APPLICATION DATA

MG 1-24.80 Service Conditions

A. General

Generators should be properly selected with respect to their service conditions, usual or unusual, both of which involve the environmental conditions to which the machine is subjected and the operating conditions. Machines conforming to Part 24 of this publication are designed for operation in accordance with their ratings under usual service conditions. Some machines may also be capable of operating in accordance with their ratings under one or more unusual service conditions. Definite-purpose or special-purpose machines may be required for some unusual conditions.

Service conditions other than those specified as usual, may involve some degree of hazard. The additional hazard depends upon the degree of departure from usual operating conditions and the severity of the environment to which the machine is exposed. The additional hazard results from such things as overheating, mechanical failure, abnormal deterioration of the insulation system, corrosion, fire and explosion.

Although past experience of the user may often be the best guide, the manufacturer of the driving equipment and the generator manufacturer should be consulted for further information regarding any unusual service conditions which increase the mechanical or thermal duty on the machine and, as a result, increase the chances for failure and consequent hazard. This further information should be considered by the user, his consultants, or others most familiar with the details of the application involved when making the final decision.

B. Usual Service Conditions

1. An ambient temperature not less than 10°C nor more than 40°C.
2. An altitude not exceeding 3300 feet (1000 meters).
3. A location or supplementary enclosures, if any, such that there is no serious interference with the ventilation of the generator.

C. Unusual Service Conditions

The manufacturer should be consulted if any unusual service conditions exist which may affect the construction or operation of the generator. Among such conditions are:

1. Exposure to:
   a. Combustible, explosive, abrasive or conducting dusts.
   b. Lint or very dirty conditions where the accumulation of dirt will interfere with normal ventilation.
   c. Chemical fumes, flammable or explosive gases.
   d. Nuclear radiation.
   e. Steam, salt-laden air, or oil vapor.
   f. Damp or very dry locations, radiant heat, vermin infestation, or atmospheres conducive to the growth of fungus.
   g. Abnormal shock, vibration, or mechanical loading from external sources.
   h. Abnormal axial or side thrust imposed on the generator shaft.
2. Operation at:
   a. Voltages above rated voltage.
   b. Speeds other than rated speed.
   c. Standstill with any winding continuously energized.
3. Operation where low noise levels are required.
4. Operation in a poorly ventilated room, in a pit, or in an inclined position.
5. Operation in parallel with other power sources.

Authorized Engineering Information 11-15-1962, revised 7-15-1970.

Copyright National Electrical Manufacturers Association
Provided by IHS under license with NEMA
No reproduction or networking permitted without license from IHS
Not for Resale

9009279 0003937 800

MG 1-24.81 Rate of Change of Load Current

Direct-current generators can be expected to operate successfully with repetitive changes in load current such as those which occur during a regular duty cycle provided that, for each change in current, the factor K, as defined in the following formula, does not exceed 15.

In the formula, the equivalent time for the current change to occur is the time which would be required for the change if the current increased or decreased at a uniform rate equal to the maximum rate at which it actually increases or decreases (neglecting any high-frequency ripple).

$$K = \frac{(\text{Change in current/rated load current})^2}{\text{Equivalent time in seconds for current change to occur}}$$

Authorized Engineering Information 8-20-1966.

MG 1-24.82 Successful Parallel Operation of Generator

Successful parallel operation is attained if the load of any generator does not differ more than plus or minus 15 percent of its rated kilowatt load from its proportionate share, based on the generator ratings of the combined load, for any change in the combined load between 20 percent and 100 percent of the sum of the rated load of all of the generators. Successful parallel operation is considered to be obtained when the following conditions are met:

1. The generators should be at their normal operating temperatures.
2. The speed of the generators should be constant or decreasing with the change in speed proportional to the change in load to agree with the speed regulation of the prime mover.
3. For compound-wound machines, the voltage drop at rated-load current across the series-field circuit (including the series-field proper, cables between series field, and main bus) of all machines should be made by the insertion of resistance if necessary.

▲ 4. **Between any two compound-wound machines, the equalizer connection circuit should have a resistance not exceeding 20 percent of the resistance of the series-field circuit of the smaller machine. However, lower values of resistance are desirable.**

Authorized Engineering Information 3-21-1973.

MG 1-24.83 Operation of Direct-current Generators in Parallel with Rectified Alternating-voltage Power Supply

A. When a direct-current generator is operated in parallel with a rectified alternating-voltage power supply, its performance may differ materially from that of the same generator when operated individually or in parallel with another direct-current generator. At the same time, its temperature rise, voltage regulation, and noise level may be increased, and successful commutation may not be achieved. The degree of difference will depend upon the magnitude of the ripple voltage impressed upon the commutator and is more likely to be significant when the rectifier pulse number is less than 6 and/or the amount of phase control is more than 15 percent.

B. If the rectified alternating-voltage power supply has a continuous pulsation or ripple in its output voltage, this ripple voltage will be impressed across the generator commutator. The performance standards for direct-current generators in Part 24 are based on individual operation or operation in parallel with a generator or battery and do not necessarily apply if the generator is operated in parallel with a power supply in which the magnitude of the resultant ripple current (peak to peak), expressed in percent of rated generator current, exceeds 6 percent at rated load and rated armature voltage.

C. When a direct-current generator is operated in parallel with some unfiltered rectifier power supplies, bearing currents may result. Ripple currents, transmitted by capacitive coupling between the rotor winding and core, may flow to ground. While these currents are small in magnitude, they may cause damage to either antifriction or sleeve bearings under certain circumstances. It is recommended that manufacturers be consulted to determine whether bearing currents may be a problem and, if so, what measures can be taken to minimize them.

Authorized Engineering Information 3-21-1973.

MG 1-24.84 Compounding

A. Flat-compounded generators should have the series winding so proportioned that the terminal voltage at no load is essentially the same as at rated load when the generator is operated at rated speed and normal operating temperature and with the field rheostat set to obtain rated voltage at rated load and left unchanged.

B. Other compounding of generators may be required to provide individual characteristics. Over-compounded generators should have the series windings so proportioned that the terminal voltage at rated load is greater than at no load when the generator is operated at rated speed and normal operating temperature and with the field rheostat set to obtain rated voltage at rated load and left unchanged. A dropping voltage-current characteristic curve where the voltage at rated load is less than the no-load voltage is used for some applications and may require the series windings to be connected in differential with respect to the shunt field.

Authorized Engineering Information 11-8-1973.

▲ Editorially revised.

Copyright National Electrical Manufacturers Association
Provided by IHS under license with NEMA
No reproduction or networking permitted without license from IHS
Not for Resale

9009279 0003938 747

INDEX

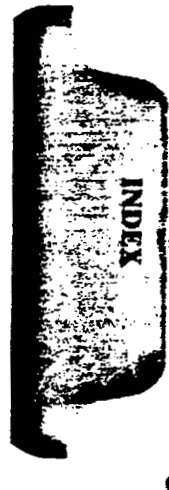

Copyright National Electrical Manufacturers Association
Provided by IHS under license with NEMA
No reproduction or networking permitted without license from IHS

Not for Resale

9009279 0003939 683

INDEX

The NEMA Standards Publication for Motors and Generators is logically arranged and contains cues and cross-references to help the reader locate desired information. The text is divided into three major sections: Section I, "Standards Applying to All Machines," with green tabs; Section II, "Fractional- and Integral-horsepower Machines," with yellow tabs; and Section III, "Large Apparatus," with orange tabs. The three major sections are divided into a total of twenty-four general "Parts" with a characteristic paragraph number series and subject title marked on the colored tabs. According to the paragraph number series, the "Part" number precedes the decimal point and the sequence number follows the decimal point. For example: under the keyword "efficiency," paragraphs numbered in the 1.XX series will indicate general definition information; the 12.XX and 15.XX series indicates efficiency information for integral horsepower machines; the 20.XX series indicates efficiency information for large induction motors; the 21.XX series for large synchronous motors; the 22.XX series for large synchronous generators; the 23.XX series for large dc motors; and the 24.XX series for large dc generators. The Index is provided to identify and cross-reference individual paragraphs by a topic or keyword. The prefix, "MG 1," which forms a part of each paragraph number, has been omitted for brevity.

A

abbreviations, 1.70, 1.80, 4.01-4.03
ac machines
  generators
    definite purpose, Part 18
    fractional and integral
      application data, Part 14
      definitions, Part 1
      dimensions, Part 11
      ratings, Part 16
    large synchronous, Part 22
    terminal markings, Part 2
  motors
    definite purpose, Part 18
    fractional and integral horsepower
      application data, Part 14, 14.30-14.44
      definitions, 1.02, 1.05, 1.15-1.18
      dimensions, Part 11, 11.30-11.37
      ratings, Part 10, 10.30-10.38
      tests and performance, Part 12
    large induction, Part 20
    large synchronous, Part 21
    terminal markings, Part 2
accessories
  external, 2.43
  high-potential tests, 3.01
  internal, 2.42
  mounting dimensions
    ac motors, 11.36
    dc motors, 11.67
  terminal connections, 2.45
adjustable-speed motor, 1.32, 1.34
air conditioning motors, 18.201-18.222
altitude. *See* service conditions. *See also* temperature rise.
ambient temperature, 1.54
  See service conditions. *See also* temperature rise.
application
  classification 1.05-1.12
  definite-purpose motors, Table of Contents, Part 18
  fractional and integral horsepower machines, Part 14
  large machines
    dc generators, 24.80-24.84
    dc motors, 23.80-23.83
    induction motors, 20.80-20.84
    synchronous generators, 22.80-22.85
    synchronous motors, 21.80-21.85
armature
  form factor, 14.60
  inductance, 23.81
  pulsating current 21.84
  ripple, 14.62, 23.81
articulated probe, 1.25, Figure 1-3
asiesmatic, 14.43, 20.83
auxiliary devices. *See* accessories.
axial centering force, 1.57

B

balance. *See also* vibration.
  fractional and integral horsepower machines, 12.05, 12.06, 16.52
  large machines
    dc generators, 24.50
    dc motors, 23.51
    induction motors, 20.52
    synchronous generators, 22.53
    synchronous motors, 21.53, 21.86
base speed, 1.33
bearing. *See also* sheaves.
  currents, 14.65
  losses, 12.08
belts, 14.07. *See also* sheaves. *See also* drives.
blade terminals, 11.05
blower motors
  belted, 18.176-18.189
  shaft-mounted, 18.126-18.141
breakdown torque. *See* torque.
bus transfer, 20.85, 21.85.a

C

capacitance, 1.56
capacitor motors. *See also* Part 18, Table of Contents, for definite-purpose machines.
  definitions, 1.17
  rating, 10.32
  schematics, 2.48-2.50, 2.53
carbonator pump motors, 18.726-18.739
chemical pump motors, 18.620
classification, Part 1
  application, 1.05-1.12
  complete machines and parts, 1.60-1.61
  electrical type, 1.15-1.20
  insulation, 1.65
  protection and cooling, 1.25-1.27
  rating, performance and test, 1.40-1.57
  size, 1.01-1.02
  variability, 1.30-1.35
  miscellaneous, 1.70-1.80
cleanliness test, 18.088, 18.088.a
clearance holes, 4.04, 11.07
close-coupled pump motors, 18.601-18.614
code letters, 1.70, 10.36
color code, 2.41
commutation, 12.68, 15.42, 23.43, 24.42
compounding, 15.45, 24.84
compound-wound, 1.19, 1.20, 12.69
compressor factors, 21.88
connection diagrams. *See* terminal markings.
constant-speed motor, 1.30
continuous duty. *See* time ratings.
coolant pump motors, 18.351-18.364
coupling, 14.37, 20.81, 21.81
crane motors, 18.501-18.520

Copyright National Electrical Manufacturers Association
Provided by IHS under license with NEMA
No reproduction or networking permitted without license from IHS
Not for Resale

9009279 0003940 3T5

D

dc machines
  generators
    definite purpose, Part 18
    industrial, Part 15
      application data, Part 14
      definitions, 1.20, 1.61
      dimensions, Part 11
      direction of rotation, 2.11, 15.60
    large apparatus, Part 24
    terminal markings, 2.10-2.13
  motors
    definite purpose, Part 18
    fractional and integral horsepower
      application data, Part 14, 14.60-14.67.a.
      definitions, 1.02, 1.05.a, 1.06, 1.07, 1.18, 1.19
      dimensions, Part 11, 11.60-11.67
      direction of rotation, 2.11, 14.06
      ratings, Part 10, 10.60-10.65
      tests and performance, Part 12
    large apparatus, Part 23
    terminal markings, 2.10-2.13
deep well pump motors
  4-inch, 18.376-18.388
  6-inch, 18.401-18.413
  8-inch, 18.414-18.424
definite-purpose motors and generators, 1.08, Part 18
definitions, Part 1
delta-connected, 2.62, 2.64
derating factor, 20.55, 21.81
deviation factor, 16.42, 22.42
dielectric
  high-potential tests, 3.01, 12.03, 12.03.a
dimensions, Part 4. *See also* Part 18, Table of Contents.
  ac machines, Part 11
    face-mounted, 11.35, 11.36
    flange-mounted, 11.37
    foot-mounted, 11.31-11.34
  dc machines, Part 11
    base, 11.66
    face-mounted, 11.63-11.67
    flange-mounted, 11.65, 11.65.a
    foot-mounted, 11.61, 11.61.a
    fractional, 11.60
    vertical, 11.66
  frame designation, 11.01
  lettering, 4.01
  terminal housings. *See* terminal housing.
  through-bolt mounting, 14.08
direction of rotation. *See* rotation.
drip-proof, 1.25
drives, 20.84, 21.83, 22.85
dryer motors, 18.301-18.314
dual voltage, 2.40, 2.62
dust ignition proof, 1.26
dynamic balance. *See* balance

E

eccentricity of mounting surfaces, 4.06
efficiency
  definition, 1.41
  integral horsepower machines
    ac motors, 12.53.a, 12.53.b
    dc generators, 15.53
    dc motors, 12.73
    synchronous generators, 16.44
  large machines
    dc generators, 24.44
    dc motors, 23.44
    induction motors, 20.51
    synchronous generators, 22.44
    synchronous motors, 21.44
  power factor, 14.44
elevator motors
  ac, 18.476-18.487
  dc, 18.426-18.436
  motor-generator sets, 18.451-18.459
embedded detectors, 20.63, 21.63
encapsulated windings, 1.27, 14.41
enclosed machine, 1.26
end-play. *See* coupling.
equalizer leads, 15.61
evaporator fan motors, 18.201-18.222
excitation voltage, 21.14, 22.15, 22.16
exciters, 21.16
explosion-proof, 1.26

F

face-mounted. *See* dimensions.
face runout, 4.06
fan motors
  belted, 18.176-18.189
  shaft-mounted, 18.126-18.141
field control, 23.11, 23.12
field data format. *See also* test forms.
  dc generators, 15.51, 24.46
  dc motors, 12.76, 23.48
fixed speed, 1.30
flanges. *See also* dimensions. *See also* definite-purpose motors and generators.
  Type C, 11.35, 11.63, 11.64, 11.64.a
  Type D, 11.37, 11.65, 11.65.a
  Type FC, 11.36, 11.67
flat compounding, 15.45, 24.84
fractional-horsepower motors
  application data, Part 14, definite purpose, Part 18
  definition, 1.01, 1.05, 1.05.a
  dimensions, Part 11
  ratings, Part 10
  terminal markings, Part 2
  tests and performance, Part 12
frame designation, 11.01. *See also* NEMA Standards Publication MG 13-1974 (R 1979).
frequency
  convertors, 18.551-18.555
  fractional and integral horsepower machines
    ac motors, 10.31, 12.43, 14.30
    synchronous generators, 16.01
    universal motors, 10.31
  large machines
    induction motors, 20.12, 20.45, 20.54
    synchronous generators, 22.14, 22.81
    synchronous motors, 21.13, 21.47, 21.86
  underfrequency, 14.32, 14.66
  variable, 12.46.a
  variations, 12.43, 14.30, 20.45, 21.47
full-load torque. *See* torque.

Copyright National Electrical Manufacturers Association
Provided by IHS under license with NEMA
No reproduction or networking permitted without license from IHS
Not for Resale

9009279 0003941 231

G

gasoline pump motors, 18.251-18.266
gear motors, 14.38, 18.001-18.013, 18.026-18.038
gears, 14.07. *See also* drive.
general industrial motor, 1.06, 23.01
general-purpose motor, 1.05, 1.05.a
general standards. *See* Section I.
grounding, 11.06.a
guarded machine, 1.25

H

heating. *See also* temperature.
  dc machines
    shuntfield, 14.64
    speed variation, 12.65, 18.434
    voltage variation, 15.44
hermetic motors, 18.076-18.093
high-frequency motors, 18.551-18.555
high-potential test, Part 3. *See also* Part 18, Table of Contents, for definite-purpose machines.
  definition, 1.55
  fractional and integral horsepower machines, 12.03, 15.48, 16.51
  large machines
    dc generators, 24.48
    dc motors, 23.50
    induction motors, 20.47
    synchronous generators, 22.51
    synchronous motors, 21.51
horsepower. *See also* Part 18, Table of Contents, for definite-purpose machines
  fractional and integral motors
    ac, 10.32-10.34
    dc, 10.62
  large motors
    dc, 23.10
    induction, 20.10, 20.10.a
    synchronous, 21.10

I

induction motor, 1.15. *See also* ac motors.
industrial. *See* Part 18, Table of Contents, for definite-purpose machines. *See also* dc machines.
instrument motors, 18.001-18.013
insulation classification 1.65, 1.66
  See also efficiency.
  See also heating.
  See also temperature.
  See also temperature rise.
integral-horsepower machines. *See* Section II.

J

jet pump motors, 18.326-18.341

K

keyseats, 4.05, 4.05.a. *See also* dimensions. *See also* Part 18, Table of Contents, for definite-purpose machines.
kilowatt ratings
  dc generators, 15.10, 24.10
  synchronous generators, 16.11, 22.11
  synchronous motors, 21.16
knockout diameters, 4.04, 11.07
kVa, 1.70, 10.35, 16.11, 22.11

L

labeling. *See* nameplate markings.
large aparatus. *See* Section III.
laundry motors, 18.301-18.314
lettering, 1.80, 4.01, 11.02. *See also* nameplate markings.
load. *See also* overload.
  capacity, large machines
    dc motors, 23.42
  current, large machines
    dc generators, 24.81
    dc motors, 23.83
  short-time, 10.35
  Wk^2, large machines
    induction, 20.42
    synchronous, 21.42
locked-rotor current
  definition, 1.52
  fractional and integral horsepower machines, 12.32-12.35
locked-rotor torque. *See* torque.

M

machine-tool motors, 18.526-18.531
magnetic pull, 1.57
marking. *See* abbreviations. *See* nameplate marking. *See* terminal marking.
mill motors, 21.87, 23.02, 23.03
motor-generator sets, 2.03, 18.451-18.459
mounting, Part 4. *See also* Part 18, Table of Contents, for definite-purpose machines. *See also* dimensions.
multispeed motor, 1.35

N

nameplate markings. *See also* Part 18, Table of Contents, for definite-purpose machines.
  fractional and integral horsepower machines
    ac motors, 10.36-10.38
    dc generators, 15.11, 15.12
    dc motors, 10.63-10.65
    synchronous generators, 16.61
  large machines
    dc generators, 24.61
    dc motors, 24.60
    induction, 20.60
    synchronous generators, 22.61
    synchronous motors, 21.61
noise, *See* sound.

O

oil burner motors, 18.276-18.290
open machine, 1.25
oscillation, 21.86
overload. *See also* service factor.
  dc generators, 15.43, 24.41
  dc motors, 12.67, 23.41
  synchronous generators, 16.41, 22.41
overspeed. *See also* speed.
  fractional and integral horsepower machines
    ac motors, 12.48
    dc generators, 15.47
    dc motors, 12.69
    synchronous generators, 16.46
  large machines
    dc generators, 24.45
    dc motors, 23.47
    induction motors, 20.44
    synchronous generators, 22.46
    synchronous motors, 21.45
overtemperature, 1.73

Copyright National Electrical Manufacturers Association
Provided by IHS under license with NEMA
No reproduction or networking permitted without license from IHS
Not for Resale

9009279 0003942 178

P

parallel operation, 16.80, 22.80, 24.82, 24.83
part-winding-start motor, 1.15, 14.36
performance. *See* tests. *See also* ac machines. *See also* dc machines.
permanent-magnet generator, 18.626-18.640
permanent-magnet motor, 1.19, 12.64, 12.65
permanent-split capacitor motor. *See* capacitor motors.
phase-sequence, 2.21, 2.22, 2.25
polarity, 2.25
polyphase motors, 1.16. *See also* ac motors.
power factor
  definition, 1.42
  fractional and integral horsepower motors, 14.44
  large synchronous motors, 21.11, 21.46
power supply, 10.61, 12.73
probes, 1.25
protection and cooling, 1.25-1.27, 1.71-1.73
pulleys, 14.07. *See also* sheaves.
pull-in torque, pull-out torque; pull-up torque. *See* torque.
pulsation. *See also* ripple.
  armature current, 21.84
  stator current, 20.82
  torque, 21.85
pump motors. *See* Part 18, Table of Contents, for definite-purpose machines.

R

ratings. *See* ac machines. *See* dc machines
reciprocating machinery, 21.86
reclosing, 20.85, 21.85.a
rectified ac. *See* ripple.
refrigeration motors, 18.076-18.093, 18.201-18.222
regulation. *See* voltage. *See also* speed.
repulsion motors, 1.17, 2.52
resistance-start motor, 1.17
reverse rotation. *See* rotation.
reversing mill motors, 23.03, 23.45
ripple
  fractional and integral horsepower dc machines
    rectified ac, 14.60-14.62, 14.66
    test power, 12.61
  large dc machines
    rectified ac, 23.81, 24.83
rodent protection, 14.09
rotation. *See also* terminal markings. *See also* Part 18, Table of Contents, definite-purpose machines.
  ac machines, 2.03, 2.24
  dc machines, 2.03, 2.11, 2.24, 14.06
  motor-generator sets, 2.03
  reverse, 2.11, 2.25
  vectors, 2.23
rotor float. *See* coupling.
routine tests. *See* tests.

S

safety warning, 3.01, 14.44
schematic diagrams. *See* terminal markings.
sealed windings, 1.27, 14.41, 20.48
secondary data, 10.34
secondary voltage, 1.45
series-wound motor, 1.15, 1.18, 1.19
service conditions
  fractional and integral horsepower machines, 14.02-14.04, 16.83
  large machines
    dc generators, 24.80
    dc motors, 23.80
    induction motors, 20.80
    synchronous generators, 22.83
    synchronous motors, 21.80
service factor, 1.43
  fractional and integral horsepower machines, 12.47, 14.04, 14.35
  large machines
    induction motors, 20.13
  synchronous motors, 21.15
servo motors, 18.026-18.038
shaded-pole motor. *See* capacitor motors.
shaft extensions, 4.05, 4.06. *See also* dimensions.
sheaves
  application, 14.07
  dimensions
    ac motors, 14.42
    dc motors, 14.67.a
shell-type motors, 18.526-18.531
short-circuit, 16.45, 22.45
shunt wound machines, 1.19, 1.20, 12.69
single-phase motor, 1.17
size, classification, 1.01, 1.02
sound
  fractional and integral horsepower machines, 12.49, 12.77, 16.86
  large machines, 20.49, 21.52, 22.52
sparking. *See* commutation.
speed. *See also* overspeed. *See also* Part 18, Table of Contents for definite-purpose machines.
  base, 1.33. 14.63
  classifications, 1.30-1.35, 1.43.a
  definite-purpose machines, Part 18
  fractional and integral horsepower machines
    ac motors, 10.32, 14.38
    dc generators, 15.10
    dc motors, 10.62, 14.63
  large machines
    dc generators, 24.10
    dc motors, 23.10, 23.12, 23.46, 23.82
    induction motors, 20.10
    regulation, 1.43.a, 23.53
    synchronous generators, 22.12
    synchronous motors, 21.10
    terminal markings, Part 2
    variation, 12.46, 12.64-12.66
splash-proof, 1.25
split capacitor motor. *See* capacitor motors.
split phase motor, 1.17, 2.47
sprockets, 14.07
squirrel-cage motors, 1.16, 1.17. *See also* ac motors.
stability, 12.74
stand-by generator, 16.84, 22.84
start, part-winding, 1.15, 14.36
starts, 12.50, 20.43, 21.43
static torque. *See* torque.
submergence test, 20.48
submersible motors, 18.376-18.424
sump pump motors. *See* Part 18, Table of Contents, definite-purpose machines.
surge test, 12.04
symbols. *See* abbreviations.
synchronous machines. *See also* Part 18, Table of Contents, for definite-purpose machines.
  definition, 1.15, 1.60
  general purpose, Part 16
  large generators, Part 22
  large motors, Part 21

Copyright National Electrical Manufacturers Association
Provided by IHS under license with NEMA
No reproduction or networking permitted without license from IHS
Not for Resale

9009279 0003943 004

T

tachometer generators, 18.626-18.640
telephone influence factor, 16.43, 22.43
temperature. *See also* insulation classification. *See also* service conditions
  ambient, 1.54
  embedded detectors, 20.63, 21.63
  overtemperature, 1.73
  overtemperature protection, 12.53, 12.75
  ratings
    ac fractional and universal motors, 10.36a
    dc generators, 15.11
    dc motors, 10.64
  tests, 1.53
  thermal protection, 1.72, 12.52, 12.53
temperature rise. *See also* service factor. *See also* Part 18, Table of Contents, definite-purpose machines. *See also* insulation classification.
  fractional and integral horsepower machines
    ac motors, 12.41, 12.42, 14.04
    dc generators, 15.41
    dc motors, 12.62, 14.04
    synchronous generators, 16.40
    universal motors, 12.41
  large machines
    dc generators, 24.40
    dc motors, 23.40
    induction motors, 20.40
    synchronous generators, 22.40
    synchronous motors, 21.40
terminal connections, 11.05
terminal housing
  dimensions for fractional and integral ac and dc motors, 11.06.a, 11.03
  induction motors, 20.62
  knockout diameters and clearance holes, 4.04, 11.07
  location, 4.02
  synchronous generators, 22.63
  synchronous motors, 21.62
terminal markings, Part 2. *See also* Part 18, Table of Contents for definite-purpose machines.
  ac machines, 2.20-2.25
    generators and synchronous motors, 2.30
    polyphase induction, 2.60-2.69
    single-phase, 2.40-2.46
  color, 2.41
  dc machines, 2.10-2.13
  direction of rotation, 2.03
  location, 2.01
  markings, 2.02
  schematic diagrams, 2.47-2.52
  universal motors, 2.51
  windings, 2.60-2.68
test forms. *See also* field data forms.
  fractional and integral horsepower machines 12.54, 12.72, 15.52
  synchronous generators, 16.49
  large machines
    induction, 20.50
    synchronous, 21.48, 21.49, 22.48, 22.49
tests. *See also* Part 28, Table of Contents, for definite-purpose machines.
  fractional and integral horsepower machines, Part 12
    ac motors, 12.30-12.54
    dc generators, 15.40-15.53
    dc motors, 12.60-12.77
    synchronous generators, 16.48-16.52
  high-potential, 3.01
  large machines
    dc generators, 24.40-24.50
    dc motors, 23.40-23.53
    induction motors, 20.40-20.55
    synchronous generators, 22.40-22.53
    synchronous motors, 21.40-21.53
thermal protection. *See* temperature.
thermal protector
  definition, 1.71
  hermetic motors, 18.082
through-bolt mounting, 14.08
thrust capacity, 18.386, 18.411, 18.423
time constants, 1.58
time ratings
  definition, 1.40
  fractional and integral horsepower machines
    ac motors, 10.35
    dc generators, 15.11
    dc motors, 10.63, 10.63a, 12.62
  large machines
    dc motors, 23.45
    induction, 20.05
tolerances, 4.05-4.07. *See also* dimensions.
  large induction motors, 20.61
torque. *See also* Part 18, Table of Contents, for definite-purpose machines.
  breakdown
    fractional and integral horsepower machines, 12.31, 12.36, 12.38, 12.40, 14.32B, 14.34C
    large machines
      induction, 20.41, 20.55C
  constant, 10.32.a
  definitions, 1.46-1.51
  locked-rotor
    fractional and integral horsepower machines. 10.36, 12.31, 12.37, 12.52, 14.32B, 14.34C
    large machines
      induction, 20.41, 20.55C
      synchronous, 21.85, 21.87
  motors, 18.651-18.653
  pull-in and pull-out
    large synchronous machines, 21.41, 21.85, 21.87
  pull-up
    fractional and integral horsepower machines, 12.31, 12.39
    large machines
      induction, 20.41
  pulsation, 21.85, 21.86
  torque motors, 18.651-18.653
  variable, 10.32.a
torsional vibration, 16.82, 22.82
totally-enclosed machines, 1.26
transient voltage, 16.48
trip current, 12.52
turbine pump motors, 18.590-18.591

U

unbalance. *See* voltage.
underfrequency, 14.32
universal motors
  definition, 1.18
  direction of rotation, 14.06
  frequencies, 10.31
  high-potential test, 12.03
  parts, 18.051-18.061
  ratings, 10.32E
  schematic, 2.51
  shaft extensions, 11.30
  temperature rise, 12.41C

Copyright National Electrical Manufacturers Association
Provided by IHS under license with NEMA
No reproduction or networking permitted without license from IHS
Not for Resale

V

V-belt. *See* sheaves.
variation. *See* voltage. *See* frequency. *See* speed.
varying speed motor, 1.31
vectors, 2.23
velocity. *See* speed.
vertical motors, 11.66. *See also* ac machines. *See also* dc machines.
vertical turbine pump motors, 18.590-18.591
vibration, 16.82, 20.53, 20.54, 21.86, 22.82, 23.52. *See also* balance.
voltage
  deviation factor, 22.42
  dip, 16.48
  excitation, 21.14, 22.15, 22.16
  high potential, 3.01
  overvoltage, 14.31
  ratings
    definite-purpose machines, Part 18
    fractional and integral horsepower machines
      ac motors, 10.30
      dc generators, 15.10
      dc motors, 10.62
    synchronous generators, 16.12
    large machines
      dc generators, 24.10
      dc motors, 23.10
      induction motors, 20.11
      synchronous generators, 22.13
      synchronous motors, 21.12
  regulation, 1.44, 15.46, 16.48, 24.49
  tests. *See* tests.
  unbalance, 12.45.a, 14.34, 20.55, 21.81
  undervoltage, 14.33, 24.43
  variable, 12.46.a, 20.45a
  variation. *See also* heating.
  fractional and integral horsepower machines
    ac motors, 12.43, 14.30
    dc generators, 15.44
    dc motors, 12.63
    synchronous generators, 16.47
  large machines
    dc motors, 23.47.a
    induction motors, 20.45
    synchronous generators, 22.47
    synchronous motors, 21.47

W

warnings, 3.01, 14.44
water-cooled, 1.26
water-proof, 1.26
weather-protected, 1.25
winding. *See also* terminal markings.
  application, 14.41
  encapsulated, 1.27
  part-winding-start, 1.15, 14.36
  sealed, 1.27, 20.48
  temperature, 12.52, 12.53
wiring diagrams. *See* terminal markings.
Wk^2. *See* load.
woodworking motors, 18.526-18.531
wound-rotor, 1.15, 12.40. *See also* ac motors.

Y

Y-connected, 2.61, 2.62, 2.64

Copyright National Electrical Manufacturers Association
Provided by IHS under license with NEMA
No reproduction or networking permitted without license from IHS
Not for Resale