LD 3

High-Pressure Decorative Laminates

Copyright National Electrical Manufacturers Association
Provided by IHS under license with NEMA
No reproduction or networking permitted without license from IHS
Not for Resale

NEMA Standards Publication LD 3-2000

High-Pressure Decorative Laminates

Published by

National Electrical Manufacturers Association
1300 N. 17th Street, Suite 1847
Rosslyn, Virginia 22209

(703) 841-3200
To Order: (800) 854-7179

© Copyright 2001 by the National Electrical Manufacturers Association. All rights including translation into other languages, reserved under the Universal Copyright Convention, the Berne Convention for the Protection of Literary and Artistic Works, and the International and Pan American Copyright Conventions.

Copyright National Electrical Manufacturers Association
Provided by IHS under license with NEMA
No reproduction or networking permitted without license from IHS
Not for Resale

TABLE OF CONTENTS

Foreword v
Section 1 GENERAL 1
1.1 Scope 1
1.2 Referenced Standards 1
1.3 Types and Descriptions 2
1.3.1 General Purpose Type 2
1.3.2 Postforming Type 2
1.3.3 Flame Retardant Type 2
1.3.4 High Wear Type 2
1.3.5 Specific Purpose Type 2
1.3.6 Compact Laminate Type 2
1.3.7 Cabinet Liner Type 2
1.3.8 Backer Type 2
1.3.9 Other Types 2
1.4 Conformance with Food, Drug, and Cosmetics Act 2
1.5 Fire Rating 3
1.6 Visual Inspection 3
1.7 Surface Finishes 3
Section 2 PERFORMANCE PROPERTIES AND VALUES 5
2.1 Performance Properties 5
Section 3 TEST METHODS 9
3.1 Appearance 9
3.1.1 Scope 9
3.1.2 Test Apparatus and Materials 9
3.1.3 Test Specimens 9
3.1.4 Test for Visual Defects 9
3.1.5 Test for Flatness 9
3.1.6 Test for Broken Corners 10
3.1.7 Test for Squareness 10
3.1.8 Test for Edge Straightness 10
3.1.9 Sanding 10
3.1.10 Test Report 10
3.2 Surface Finish 11
3.2.1 Scope 11
3.2.2 Test Apparatus and Materials 11
3.2.3 Test Specimens 11
3.2.4 Calibration 11
3.2.5 Test Procedure 11
3.2.6 Test Report 11
3.3 Light Resistance 12
3.3.1 Scope 12
3.3.2 Test Apparatus and Materials 12
3.3.3 Test Specimens 12
3.3.4 Test Procedure 12
3.3.5 Factors Influencing the Accuracy of the Test 13
3.3.6 Test Report 13
3.4 Cleanability/Stain Resistance 13
3.4.1 Scope 13
3.4.2 Test Apparatus and Materials 13
3.4.3 Test Specimens 14
3.4.4 Test Reagents 14
3.4.5 Test Procedure 15

Copyright National Electrical Manufacturers Association
Provided by IHS under license with NEMA
No reproduction or networking permitted without license from IHS
Not for Resale

3.4.6 Test Report 15
3.5 Boiling Water Resistance 16
3.5.1 Scope 16
3.5.2 Test Apparatus and Materials 16
3.5.3 Test Specimens 18
3.5.4 Test Procedure 18
3.5.5 Factors Influencing the Accuracy of the Test 18
3.5.6 Test Report 18
3.6 High Temperature Resistance 18
3.6.1 Scope 18
3.6.2 Test Apparatus and Materials 19
3.6.3 Test Specimens 19
3.6.4 Test Procedure 19
3.6.5 Factors Influencing the Accuracy of the Test 19
3.6.6 Test Report 19
3.7 Linear Glass Scratch Resistance *(Values under consideration)* 20
3.7.1 Scope 20
3.7.2 Test Apparatus and Materials 20
3.7.3 Test Specimens 23
3.7.4 Calibration of Test Apparatus 25
3.7.5 Test Procedure 25
3.7.6 Factors Influencing the Accuracy of the Test 26
3.7.7 Test Report 26
3.8 Ball Impact Resistance 27
3.8.1 Scope 27
3.8.2 Test Apparatus and Materials 27
3.8.3 Test Specimens 27
3.8.4 Test Procedure 27
3.8.5 Factors Influencing Accuracy of the Test 27
3.8.6 Test Report 29
3.9 Dart Impact Resistance 29
3.9.1 Scope 29
3.9.2 Test Apparatus and Materials 30
3.9.3 Test Specimens 30
3.9.4 Test Procedure 30
3.9.5 Factors Influencing Accuracy of the Test 30
3.9.6 Test Report 32
3.10 Radiant Heat Resistance 33
3.10.1 Scope 33
3.10.2 Test Apparatus and Materials 33
3.10.3 Test Specimens 33
3.10.4 Calibration 33
3.10.5 Test Procedure 36
3.10.6 Factors Influencing the Accuracy of the Test 37
3.10.7 Test Report 37
3.11 Dimensional Change 37
3.11.1 Scope 37
3.11.2 Test Apparatus and Materials 37
3.11.3 Test Specimens 37
3.11.4 Test Procedure 38
3.11.5 Calculation 39
3.11.6 Test Report 40
3.12 Room Temperature Dimensional Stability 40
3.12.1 Scope 40
3.12.2 Test Apparatus and Materials 40

Copyright National Electrical Manufacturers Association
Provided by IHS under license with NEMA
No reproduction or networking permitted without license from IHS
Not for Resale

3.12.3 Test Specimens....41
3.12.4 Test Procedure....41
3.12.5 Calculation....41
3.12.6 Test Report....41
3.13 Wear Resistance....42
3.13.1 Scope....42
3.13.2 Test Apparatus and Materials....42
3.13.3 Test Specimens....42
3.13.4 Preparation of Test Wheels....42
3.13.5 Preparation of Test Apparatus....42
3.13.6 Standardization of Abrasive....43
3.13.7 Test Procedure....43
3.13.8 Calculation....44
3.13.9 Factors Influencing the Accuracy of the Test....44
3.13.10 Test Report....44
3.14 Formability....45
3.14.1 Scope....45
3.14.2 Test Apparatus and Materials....45
3.14.3 Test Specimens....45
3.14.4 Calibration....45
3.14.4 Calibration (cont'd.)....52
3.14.5 Test Procedure....52
3.14.6 Test Report....52
3.15 Blister Resistance....53
3.15.1 Scope....53
3.15.2 Test Apparatus and Materials....53
3.15.3 Test Specimens....53
3.15.4 Calibration....53
3.15.5 Test Procedure....54
3.15.6 Test Report....54

Annex A APPLICATION, FABRICATION, AND INSTALLATION....A-1
A.1 Introduction....A-1
A.2 General Discussion....A-1
A.3 Materials....A-2
A.3.1 High-Pressure Decorative Laminate....A-2
A.3.2 Adhesives....A-3
A.3.2.1 Contact Types....A-3
A.3.2.2 Polyvinyl Acetate Types (White Glue)....A-4
A.3.2.3 Thermosetting Types....A-4
A.3.2.4 Hot Melt Types....A-4
A.3.2.5 Urethane Types....A-4
A.3.3 Substrate....A-4
A.3.4 Factors Affecting Bonded Assemblies....A-5
A.4 Conditioning and Storage of Materials Prior to Fabrication....A-6
A.5 Fabrication Tooling....A-7
A.5.1 Sawing....A-7
A.5.1.1 Band Sawing....A-7
A.5.1.2 Circular Sawing....A-7
A.5.2 Routing....A-7
A.5.3 Sanding....A-8
A.5.4 Drilling....A-8
A.6 General Rules for Fabrication and Installation....A-9
A.6.1 Fabrication in the Shop....A-9
A.6.2 Postforming Laminates....A-11

--`,,`,,`-`-`,,`,,`,`,,`---

Copyright National Electrical Manufacturers Association
Provided by IHS under license with NEMA
No reproduction or networking permitted without license from IHS

Not for Resale

A.6.3 Installation on the Job A-12
A.6.4 Field Working of Bonded Assemblies A-13
A.7 Typical Problems—Causes and Preventions A-13

Annex B CARE AND CLEANING OF LAMINATES B-1

Annex C PERCEPTION OF SCRATCHES C-1

Annex D WEAR RESISTANCE CHART D-1

Annex E SIZE ESTIMATION CHART E-1

--`,,`-`-`,,`,,`,`,,`---

Copyright National Electrical Manufacturers Association
Provided by IHS under license with NEMA
No reproduction or networking permitted without license from IHS
Not for Resale

Foreword

This standards publication has been prepared by the Decorative Laminate Section of the National Electrical Manufacturers Association for use by manufacturers and fabricators of high-pressure decorative laminates (HPDL). The test methods and performance values presented have been related as closely as possible to end-use applications, and user needs have been considered throughout.

LD 3-2000 revises and supersedes LD 3-1995.

The Decorative Laminate Section works closely with trade organizations and appropriate government agencies in the periodic review and revision of these standards.

The section's testing laboratory at North Carolina State University has been instrumental over a period of years in developing new test methods, perfecting old test methods, and conducting round robins among producer laboratories to prove the reproducibility of test methods.

These standards are periodically reviewed by the Decorative Laminate Section for any revisions necessary to keep them up to date with advancing technology. Proposed or recommended revisions should be submitted to:

Vice-President, Engineering
National Electrical Manufacturers Association
1300 N. 17th Street
Rosslyn, Virginia 22209

In this 2000 edition of the NEMA standards publication for High-Pressure Decorative Laminates, effort has been continued to relate the standards more closely to the performance expected in their end-use applications. The type and thickness of the decorative laminate, the substrate, the adhesive, and the fabricating techniques employed have a definite bearing on the performance of the final product in service. Information on substrates, adhesives, fabrication, and installation has been updated and is found in Annex A. Information concerning care and cleaning of high-pressure decorative laminate (HPDL) is found in Annex B. Information pertaining to the perception of scratches is found in Annex C. Information about the NEMA wear resistance chart is found in Annex D. Information for the size estimation chart is found in Annex E.

Where values are given in both metric and U. S. customary units, the metric units are to be regarded as the standard. Equipment drawings in this edition are designed with metric units. Existing equipment, built to U. S. customary units and in compliance with the 1995 edition of the LD 3, remain acceptable for use.

DISCLAIMER

The standards or guidelines presented in a NEMA standards publication are considered technically sound at the time they are approved for publication. They are not a substitute for a product seller's or user's own judgment with respect to the particular product referenced in the standard or guideline, and NEMA does not undertake to guaranty the performance of any individual manufacturer's products by virtue of this standard or guide. Thus, NEMA expressly disclaims any responsibility for damages arising from the use, application, or reliance by others on the information contained in these standards or guidelines.

--`,,`,,`-`-`,,`,,`,`,,`---

Copyright National Electrical Manufacturers Association
Provided by IHS under license with NEMA
No reproduction or networking permitted without license from IHS
Not for Resale

Members

Formica Corporation
10155 Reading Road
Cincinnati, OH 45241
(800) 367-6422

Nevamar, International Paper
8339 Telegraph Road
Odenton, MD 21113-1397
(800) 638-4380

Pionite Division
Panolam Industries International
P. O. Box 1014
One Pionite Road
Auburn, ME 04211-1014
(800) 746-6483

Wilsonart International
P. O. Box 6110
2400 Wilson Place
Temple, TX 76503-6110
(800) 433-3222

NEMA 6 LD Section Testing Laboratory

North Carolina State University
Department of Wood and Paper Science
Box 8005
411 Dan Allen Drive
Raleigh, NC 27695
(919) 515-3181

--`,,`,,`-`-`,,`,,`,`,,`---

Copyright National Electrical Manufacturers Association
Provided by IHS under license with NEMA
No reproduction or networking permitted without license from IHS

Not for Resale

Section 1
GENERAL

1.1 SCOPE

This standards publication covers high-pressure decorative laminate (HPDL) sheets which consist of papers, fabrics, or other core materials that have been laminated at pressures of more than 5.0 MPa using thermosetting condensation resins as binders.

1.2 REFERENCED STANDARDS

In this publication, reference is made to the standards listed below. Copies are available from the indicated sources:

American Society for Testing and Materials

100 Barr Harbor Drive
West Conshohocken, PA 19428
(610) 832-9585

D 523-99	*Specular Gloss*
D 638-97	*Tensile Properties of Plastics*
D 790-97	*Flexural Properties of Unreinforced and Reinforced Plastics and Electrical Insulating Materials*
G 26-96	*Operating Light-Exposure Apparatus (Xenon-Arc Type) With and Without Water for Exposure of Nonmetallic Materials*

International Organization for Standardization

1, Rue de Varembe
Case Postale 56
CH-1211 Geneva, Switzerland
documents are available from
American National Standards Institute
11 West 42nd St.
New York, NY 10036
(212) 642-4980

ISO 4586-1	*High-pressure decorative laminates (HPL)-Sheets based on thermosetting resins (Usually called Laminates)*

National Electrical Manufacturers Association

1300 N. 17th Street
Rosslyn, Virginia 22209
documents are available from
Global Engineering Documents
15 Inverness Way East
Englewood, CO 80112
(800) 854-7179

LI 1-1998	*Industrial Laminated Thermosetting Products*

--`,,`-`-`,,`,,`,`,,`---
Copyright National Electrical Manufacturers Association
Provided by IHS under license with NEMA
No reproduction or networking permitted without license from IHS
Not for Resale

1.3 TYPES AND DESCRIPTIONS

The following types and descriptions of high-pressure decorative laminate are covered by these standards. Where appropriate, the backs of the sheets shall be sanded or otherwise prepared to be suitable for bonding with adhesives to a base material for mechanical support.

1.3.1 General Purpose Type
General purpose type is a high-pressure decorative laminate designed for both horizontal and vertical applications where appearance, durability, resistance to stains, and resistance to heat up to 135°C (275°F) is required.

1.3.2 Postforming Type
Postforming type is a high-pressure decorative laminate similar to the general-purpose type, but it is capable of being thermoformed under controlled temperature and pressure in accordance with the laminate manufacturer's recommendations.

1.3.3 Flame Retardant Type
Flame retardant type laminate is a high-pressure decorative laminate capable of providing flame retardant characteristics as determined by test methods required by the authority having jurisdiction.

1.3.4 High Wear Type
High wear type laminate is a general purpose high-pressure decorative laminate with increased surface wear resistance.

1.3.5 Specific Purpose Type
Specific purpose type is a general purpose high-pressure decorative laminate for specific heavy-duty applications such as transportation, door kick plates, and other appropriate applications.

1.3.6 Compact Laminate Type
Compact laminate type is a high-pressure decorative laminate of increased thickness. Two general categories are normally recognized. The first category is single or double faced, approximately 2 to 6 mm thick, and needs to be rigidly supported without necessarily being bonded to a substrate. The second category is double faced, usually thicker than 6 mm, and self-supporting. The thickness will be selected according to application and panel dimensions.

1.3.7 Cabinet Liner Type
Cabinet liner type is a high-pressure decorative laminate intended only for use in cabinet interiors.

1.3.8 Backer Type
Backer type laminate is a high-pressure decorative laminate without a decorative face intended for use as a balancing sheet in panel construction.

1.3.9 Other Types
Various decorative effects have been developed which meet specific aesthetic requirements. These laminates may have special visual appeal such as gloss finish, deeply embossed textures, and metallic surfaces. They are designed for specific installations and may not be suitable for all applications. For this reason, they are not included in these standards. Information concerning their proper application, properties, and care should be requested from the manufacturer.

1.4 CONFORMANCE WITH FOOD, DRUG, AND COSMETICS ACT

Section 175.300 of the Code of Federal Regulations, Title 21, April 1, 1999 sets forth those resinous and polymeric coatings which may, when used in accordance with the conditions prescribed in that section, be safely used as food contact surfaces.

--`,,`-`-`,,`,,`,`,,`---
Copyright National Electrical Manufacturers Association
Provided by IHS under license with NEMA
No reproduction or networking permitted without license from IHS
Not for Resale

Section 175.300 should be consulted to determine which resins commonly used in the manufacture of decorative laminates are safe for use as food contact surfaces.

1.5 FIRE RATING

These standards do not specify the fire rating characteristics of individual products. These products are measured and reported in accordance with the procedures established by code-specifying agencies, such as the National Fire Protection Association, Building Officials Conference of America, and other local, state, and federal code agencies. The manufacturer should be consulted for a specific fire rating.

High-pressure decorative laminates are surfacing materials that are usually combined with substrate materials. Therefore, the fire rating data should be developed by testing the combined laminate, adhesive, and substrate, and the manufacturer should be consulted.

1.6 VISUAL INSPECTION

The inspector shall have normal vision, corrected if necessary. No magnification shall be used when viewing the specimens.

1.7 SURFACE FINISHES

High-pressure decorative laminates shall have finishes which impart various degrees of gloss to the surface. The gloss levels of satin, furniture, high gloss, and textured finish laminates shall be measured in accordance with Section 3.2 and shall be within the values of Table 1-1.

Table 1-1
SURFACE FINISHES

Machine Direction (MD)	Cross-Machine Direction (CD)	Finish
1–20	1–20	Textured finish, low gloss
15–34	5–34	Satin finish
21–45	21–45	Textured finish, high gloss
35–60	21–60	Furniture finish
60–100+	60–100+	High gloss finish

Laminates are normally sanded in the machine direction. Higher gloss readings and pattern direction do not necessarily indicate machine direction.

Other finishes are available, but because of the nature of the surface texture, no standard test method has yet been developed which adequately characterizes these surfaces.

High-pressure decorative laminate with gloss levels over 50 may exhibit performance properties that are different from other finishes and may not conform to all performance requirements in this standard.

Copyright National Electrical Manufacturers Association
Provided by IHS under license with NEMA
No reproduction or networking permitted without license from IHS
Not for Resale

Copyright National Electrical Manufacturers Association
Provided by IHS under license with NEMA
No reproduction or networking permitted without license from IHS
Not for Resale

Section 2
PERFORMANCE PROPERTIES AND VALUES

2.1 PERFORMANCE PROPERTIES

The performance properties and values shall be as shown in Tables 2-1 through 2-4.

Table 2-1
PERFORMANCE PROPERTIES

			General Purpose				Post-Forming		Flame Retardant		
	Property	**Grade** Units**	**HGS**	**HGL**	**VGS**	**VGL**	**HGP**	**VGP**	**SGF**	**HGF**	**VGF**
	Nominal Thickness	**mm (In.)**	1.2 (0.048)	1.0 (0.039)	0.7 (0.028)	0.5 (0.020)	1.0 (0.039)	0.7 (0.028)	1.5 (0.059)	1.2 (0.048)	0.8 (0.032)
LD 3 Test Method	**Thickness Tolerance**	**mm (In.)**	±0.12 (±0.005)	±0.12 (±0.005)	0.10 (±0.004)	±0.10 (±0.004)	±0.12 (±0.005)	±0.10 (±0.004)	±0.12 (±0.005)	±0.12 (±0.005)	±0.12 (±0.005)
3.1	Appearance		See Section 3.1 and Table 2-4 for Requirements								
3.2	Surface Finish		See Table 1-1								
3.3	Light Resistance	Rating,* Min.	SL	SL	SL	SL	SL	SL	SL	SL	SL
3.4	Cleanability	Rating,* Max.	20	20	20	20	20	20	20	20	20
	Stain 1 – 10	Rating,* Min.	NE	NE	NE	NE	NE	NE	NE	NE	NE
	Stain 11 – 15	Rating,* Min.	M	M	M	M	M	M	M	M	M
3.5	Boiling Water Resistance	Rating,* Min.	NE	NE	NE	NE	SL	SL	NE	NE	NE
3.6	High Temperature Resistance	Rating,* Min.	SL	SL	SL	SL	SL	SL	SL	SL	SL
3.7	Linear Glass Scratch Resistance		See Chart 3-1 of Section 3.7.7								
3.8	Ball Impact Resistance	mm (In.) Min.	1250 (50)	900 (35)	500 (20)	400 (15)	750 (30)	500 (20)	1400 (55)	1150 (45)	500 (20)
3.9	Dart Impact Resistance	mm	500	300	200	. . .	300	200	550	450	200
3.10	Radiant Heat Resistance	Sec., Min.	125	100	80	60	100	80	125	75	50
3.11	Dimensional Change	% MD, Max.	0.5	0.6	0.7	0.8	1.1	1.1	0.5	0.5	0.7
		% CD, Max.	0.9	1.0	1.2	1.3	1.4	1.4	0.9	0.9	1.2
3.12	Room Temperature Dimensional Stability	% MD, Max.	0.5	0.6	0.6	0.8	1.0	1.0	0.5	0.5	0.7
		% CD, Max.	0.8	1.0	1.1	1.3	1.3	1.3	0.9	0.9	1.2
3.13	Wear Resistance	Cycles, Min.	400	400	400	400	400	400	400	400	400
3.14	Formability	mm (In) Radius, Min.	. . .	. . .	. . .	. . .	16 (5/8)	13 (1/2)	. . .	. . .	. . .
3.15	Blister Resistance	Sec., Min.	. . .	. . .	. . .	. . .	55	40	. . .	. . .	. . .

* Rating System: NE-No effect, SL-Slight effect, M-Moderate effect, S-Severe effect.

** Grade designations are not acronyms

Table continued, next page

Copyright National Electrical Manufacturers Association
Provided by IHS under license with NEMA
No reproduction or networking permitted without license from IHS
Not for Resale

Table 2-1
PERFORMANCE PROPERTIES (continued)

			High Wear			Specific Purpose		Compact Laminate		Cabinet Liner
	Property	**Grade** Units**	**HDH**	**HDM**	**HDS**	**HSH**	**HSM**	**CGS**		**CLS**
	Nominal Thickness	**mm (In.)**	3.0 (0.118)	1.5 (0.059)	1.2 (0.048)	3.0 (0.118)	1.5 (0.059)	>6.0 (>0.236)	2.0-6.0 (0.079-0.236)	0.5 (0.020)
LD 3 Test Method	**Thickness Tolerance**	**mm (In.)**	±0.20 (±0.008)	±0.12 (±0.005)	±0.12 (±0.005)	±0.20 (±0.008)	±0.12 (±0.005)	± 5% of Thick-ness	±0.30 (±0.012)	±0.10 (±0.004)
3.1	Appearance		See Section 3.1 and Table 2-4 for Requirements							. . .
3.2	Surface Finish		See Table 1-1							
3.3	Light Resistance	Rating,* Min.	SL	SL	SL	SL	SL	SL	SL	M
3.4	Cleanability	Rating,* Max.	20	20	20	20	20	20	20	20
	Stain 1 – 10	Rating,* Min.	NE	NE	NE	NE	NE	NE	NE	M
	Stain 11 – 15	Rating,* Min.	M	M	M	M	M	M	M	M
3.5	Boiling Water Resistance	Rating,* Min.	NE	NE	NE	NE	NE	NE	NE	M
3.6	High Temperature Resistance	Rating,* Min.	SL	SL	SL	SL	SL	SL	SL	M
3.7	Linear Glass Scratch Resistance		See Chart 3-1 of Section 3.7.7							
3.8	Ball Impact Resistance	mm (In.) Min.	1900 (75)	1400 (55)	1250 (50)	1900 (75)	1400 (55)	1900 (75)	1900 (75)	250 (10)
3.9	Dart Impact Resistance	mm	600	550	500	600	550	. . .	. . .	. . .
3.10	Radiant Heat Resistance	Sec., Min.	200	150	125	200	150	200	200	. . .
3.11	Dimensional Change	% MD, Max.	0.3	0.5	0.5	0.3	0.5	0.3	0.3	1.2
		% CD, Max.	0.7	0.9	0.9	0.7	0.9	0.7	0.7	2.0
3.12	Room Temperature Dimensional Stability	% MD, Max.	0.3	0.5	0.5	0.3	0.5	0.3	0.3	1.2
		% CD, Max.	0.7	0.8	0.8	0.7	0.9	0.7	0.7	2.0
3.13	Wear Resistance	Cycles, Min.	3000	3000	3000	400	400	400	400	50

* Rating System: NE-No effect, SL-Slight effect, M-Moderate effect, S-Severe effect.
** Grade designations are not acronyms

--`,,`-`-`,,`,,`,`,,`---
Copyright National Electrical Manufacturers Association
Provided by IHS under license with NEMA
No reproduction or networking permitted without license from IHS
Not for Resale

Table 2-2
PERFORMANCE PROPERTIES FOR BACKER MATERIAL

		Backer			
Property	**Units**	**BKH**	**BKM**	**BKV**	**BKL**
Nominal Thickness	**mm (In.)**	1.2 (0.048)	1.0 (0.039)	0.7 (0.028)	0.5 (0.020)
Thickness Tolerance	**mm (In.)**	±0.12 (±0.005)	±0.12 (±0.005)	±0.10 (±0.004)	±0.10 (±0.004)

Table 2-3
PERFORMANCE PROPERTIES FOR COMPACT LAMINATE

			Compact Laminate	
	Property	**Units**	**CGS**	
ASTM Test Method	**Nominal Thickness**	**mm (In.)**	>6.0 (>0.236)	2.0-6.0 (0.079-0.236)
D 790	Flexural Strength	MPa (psi) MD Min.	1.24×10^2 (18000)	1.24×10^2 (18000)
		MPa (psi) CD Min.	8.27×10^1 (12000)	8.27×10^1 (12000)
D 790	Flexural Modulus (Modulus of Elasticity)	MPa (psi) MD Min.	1.10×10^4 (1.6×10^6)	1.10×10^4 (1.6×10^6)
		MPa (psi) CD Min.	9.65×10^3 (1.4×10^6)	9.65×10^3 (1.4×10^6)
D 638	Tensile Strength	MPa (psi) MD Min.	1.24×10^2 (18000)	1.24×10^2 (18000)
		MPa (psi) CD Min.	8.27×10^1 (12000)	8.27×10^1 (12000)

Table 2-4
PERFORMANCE PROPERTIES FOR FLATNESS

	Property	**Units**	**Single-Faced Laminates**		**Double-Faced Compact Laminates**	
LD 3 Test Method	**Nominal Thickness**	**mm (In.)**	<2.0 (<0.079)	2.0-6.0 (0.079-0.236)	2.0-6.0 (0.079-0.236)	>6.0 (>0.236)
3.1.5	Test for Flatness		±120 mm (± 4.7 in)	± 50 mm (± 2.0 in)	± 12.0 mm (± 0.50 in)	± 6.0 mm (± 0.25 in)

Copyright National Electrical Manufacturers Association
Provided by IHS under license with NEMA
No reproduction or networking permitted without license from IHS
Not for Resale

Copyright National Electrical Manufacturers Association
Provided by IHS under license with NEMA
No reproduction or networking permitted without license from IHS
Not for Resale

Section 3
TEST METHODS

3.1 APPEARANCE

3.1.1 Scope

This test measures the visual and dimensional quality of high-pressure decorative laminate.

3.1.2 Test Apparatus and Materials

The test apparatus and materials shall include:

a. Flat level horizontal surface (bench or table) approximately 750 to 900 mm (30 inches) high.
b. Overhead white fluorescent lights with bulb(s) positioned parallel to the line of sight and providing an intensity of 800 to 1100 lux (75 to 100 foot-candles) on the specimen surface.
c. Size estimation chart (Annex E).
d. Tape measure capable of measuring to 1 mm (1/32 in) accuracy.
e. 1 meter (≈1 yard) straight edge.
f. Commercially available non-abrasive cleaner containing 4% butyl cellosolve.

3.1.3 Test Specimens

The test specimen shall be an entire sheet.

3.1.4 Test for Visual Defects

a. Place the test specimen on the horizontal support. The surface shall be cleaned with the cleaning solution and allowed to dry.
b. Examine the test specimen by viewing it at an eye-to-specimen distance of approximately 750 to 900 mm (30 to 36 inches) and at an angle of approximately 45° to 75° from the horizontal plane (table surface). The specimen shall be viewed from all directions. Direct sunlight or other angle light sources, which will accentuate or minimize the effect, shall be avoided.
c. Inspect the specimen for the following defects:
    1. Type A defects—Smudges, smears, fingerprints, or streaks
    2. Type B defects—any foreign particle which has an area of 0.60 mm^2 or larger and which is visible at the viewing distance
    3. Type C defects—any group of three or more foreign particles, each having an area of 0.30 mm^2 or more, which occur within a 300 mm (≈ 12 inch) diameter circle and which are visible at the viewing distance. If only two foreign particles occur within the prescribed circle, each particle shall be judged separately according to the criteria for Type B defects
    4. Test specimens shall not have any Type A, B, or C defects
d. For grades of compact grade laminate that are specified with two good sides, each surface shall be evaluated separately.

3.1.5 Test for Flatness

The maximum allowed warpage shown in Table 2-4 is based on laminates that have been stored at a temperature of 23° ± 2°C (73.4° ± 3.6°F) and a relative humidity of 50 ± 5 percent. Measurement shall be made by laying the sheet concave side up on a flat level surface and measuring greatest point of deflection from the surface. For descriptive purposes the measured value shall be reported as negative if

--`,,`-`-`,,`,,`,`,,`---
Copyright National Electrical Manufacturers Association
Provided by IHS under license with NEMA
No reproduction or networking permitted without license from IHS
Not for Resale

the sheet is measured sanded side up and positive if measured with the decorative side up. Laminates stored in recommended conditions shall not show departure from the flat surface of more than the limits listed in Table 2-4.

The accuracy of the measurement depends on the relative flatness of the surface upon which the laminate is placed.

3.1.6 Test for Broken Corners

One broken corner of 25 mm (≈1.0 inch) or less or two broken corners of 13 mm (≈0.5 inch) are allowed. The measurement shall be the distance between the fracture line and the original corner.

3.1.7 Test for Squareness

A full size sheet of laminate shall be square to within 6 mm (≈0.25 in.) when comparing cross corner to cross corner measurements. See Figure 3-1.

Example: $| L1 - L2 | \leq 6$ mm (0.25 in.)

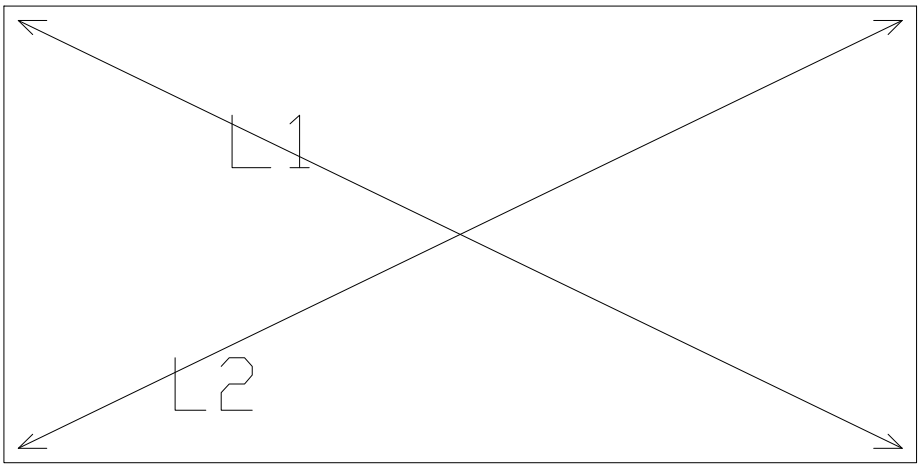

Figure 3-1
SQUARENESS

3.1.8 Test for Edge Straightness

All edges shall be straight with a tolerance of 1.5 mm (0.06 in.) per meter of edge length. The measurement shall be made by placing the 1 meter long straight edge along the edge of the laminate and measuring the greatest deviation from the laminate edge to the straight edge. Edges less than 1 meter in length shall not be measured.

3.1.9 Sanding

Slight chatter marks may be present due to limitations of available sanding equipment.

3.1.10 Test Report

The test report shall list all Type A, B, and C defects and pass/fail criteria of sections 3.1.5 through 3.1.8.

Copyright National Electrical Manufacturers Association
Provided by IHS under license with NEMA
No reproduction or networking permitted without license from IHS
Not for Resale

3.2 SURFACE FINISH

3.2.1 Scope

This test measures the gloss level of high-pressure decorative laminate.

Gloss should not be confused with reflectance or apparent reflectance. Gloss is determined by the smoothness of the surface and is measured by the amount of light which is reflected when the angle of incidence is equal to the angle of reflection.

Reflectance is the ratio of the total quantity of light reflected from a surface to the total quantity of incident light on the surface. Reflectance is determined by color and shading of the opaque laminate and is independent of surface finish. Apparent reflectance, of which gloss is a special kind, refers to a specified condition of view or reflection.

3.2.2 Test Apparatus and Materials

The test apparatus and materials shall include:

a. Portable 60° gloss meter.
b. Black glass high-gloss standard with a rating of 94 ± 1 unit.
c. The test apparatus shall be in accordance with ASTM D 523 with the exception that the primary working standard shall have a value of 94 ± 1 unit.
d. A clean, soft, white cloth.

3.2.3 Test Specimens

Test specimens shall be at least 150 x 150 mm (6 x 6 inches) x thickness. They shall represent, if possible, the four corners and the geometric center of the full-size production sheet. The test specimens shall not be conditioned prior to the test.

3.2.4 Calibration

The gloss meter shall be calibrated per the manufacturer's instructions.

Gloss meters which have been manufactured to electronically calibrate to ASTM D 523 may be used to determine the gloss level of high-pressure decorative laminates.

3.2.5 Test Procedure

a. Wipe the specimen with a clean, soft, white cloth.
b. Place the calibrated gloss meter on the first sample in the machine direction of the laminate, aligning the opening in the bottom of the instrument with the center of the test area. Take and record the gloss meter reading.
c. Place the calibrated gloss meter on the first sample in the cross-machine direction of the laminate, aligning the opening in the bottom of the instrument with the center of the test area. Take and record the gloss meter reading.
d. Repeat steps a) through c) for all other test areas of full-sized panels or individual test specimens.

3.2.6 Test Report

The test report shall include:

a. The average of all readings taken in the machine direction.
b. The average of all readings taken in the cross-machine direction.

Copyright National Electrical Manufacturers Association
Provided by IHS under license with NEMA
No reproduction or networking permitted without license from IHS
Not for Resale

3.3 LIGHT RESISTANCE

3.3.1 Scope

This test measures the ability of high-pressure decorative laminate to retain its color when exposed to a light source having a frequency range approximating sunlight through window glass.

It is not intended to show the resistance to continuous exposure to outdoor weathering conditions.

3.3.2 Test Apparatus and Materials

The test apparatus shall include:

a. A suitable commercial xenon gas arc discharge light source capable of providing radiant energy closely approximating sunlight with a spectral bandpass of 280 to 800 nm with appropriate filtering to simulate light energy through a window. The equipment shall conform to ASTM G 26.

b. The test apparatus shall be capable of maintaining the following parameters within the range specified:

1. Black Panel Temp ± 3°C(± 5°F)
2. Dry Bulb Temp ± 3°C(± 5°F)
3. Wet Bulb Temp ± 1°C(± 2°F)
4. Conditioning Water ± 3°C(± 5°F)
5. Duration of Exposure ± 1% of cycle time
6. Automatic stepping of power to the light source to maintain steady irradiance levels and accommodate aging effect of xenon burners and solarization of filters.
7. Calibration at 420 nm

c. Specimen holder racks capable of maintaining equal radial distance from the center of the light source and revolving around the light source so as to provide equal radiant exposure.

d. Overhead white fluorescent lights with bulb(s) positioned parallel to the line of sight and providing an intensity of 800 to 1100 lux (75 to 100 foot-candles) on the specimen surface.

e. White petroleum jelly.

3.3.3 Test Specimens

The test specimen shall be of the size required by the test apparatus. The long dimension of the specimen shall be in the machine direction. The test specimen shall be conditioned for at least 48 hours prior to the test at a temperature of 23° ± 2°C (73.4° ± 3°F) and at a relative humidity of 50 ± 5 percent.

3.3.4 Test Procedure

a. Mount the test specimen in a masking holder so that approximately one-half of the specimen shall be exposed to the light source, the other half being covered by the masked holder.

b. Maintain as set points the following conditions:

1. Black Panel Temp. 70°C (158°F)
2. Dry Bulb Temp.* 50°C (122°F)
3. Wet Bulb Temp. 39°C (102°F)
   to maintain 50% (± 5%) Relative Humidity
4. Conditioning Water 20°C (68°F)

*The black panel temperature is the primary controlled temperature and the dry bulb temperature is actually under secondary control.

Copyright National Electrical Manufacturers Association
Provided by IHS under license with NEMA
No reproduction or networking permitted without license from IHS
Not for Resale

c. Expose the specimens to the light source at a rate of irradiance of 1.10 ± .03 W/m^2. The total irradiance per test cycle shall be 285.1 ± 2.0 kJ/m^2 and shall be accomplished in a period of 72 ± 2 hours.
d. At the conclusion of the exposure period, remove the test specimen from the masking holder and allow it to condition at ambient room temperature for a period of 24 hours.
e. Examine the conditioned specimen within 4 hours by placing it, without preinspection, on a table and then viewing it at an eye-to-specimen distance of approximately 750 to 900 mm (30 to 36 inches) and at an angle of approximately 45º to 75º from the horizontal plane (table surface). The specimen shall be rotated in the horizontal plane and viewed from all directions. Direct sunlight and/or other angle light sources, which can accentuate or minimize the effects, shall be avoided.

If a difference in appearance occurs between the exposed and unexposed areas of the test specimen, coat the specimen with a thin film of white petroleum jelly and re-examine it. If the difference persists, report the difference as a color change; if it disappears, report it as a change in surface finish.

3.3.5 Factors Influencing the Accuracy of the Test

a. The black panel thermometer should be mounted at the same distance from the light source as the samples. The black coating should be such as to report as accurate as possible the black body temperature of the panel.
b. All test parameters should be maintained as closely as possible to the set-point.
c. The manufacturer's recommendations for calibrations, maintenance, and filter changes should be adhered to stringently.
d. All sample locations should be filled during the test cycle utilizing blanks as necessary in order to maintain correct air-flow through the test chamber.

3.3.6 Test Report

The light resistance shall be reported as one of the following:

a. No effect—no change in color or surface finish.
b. Slight effect—a change in color or surface finish visible only at certain angles and directions.
c. Moderate effect—a change in color or surface finish visible at all angles and directions but does not notably alter the original condition of the specimen.
d. Severe effect—a change in color or surface finish that markedly alters the original condition of the specimen.

The report shall include the test apparatus utilized.

3.4 CLEANABILITY/STAIN RESISTANCE

3.4.1 Scope

This test measures both the ease of cleanability and stain resistance of high-pressure decorative laminate by common household substances.

3.4.2 Test Apparatus and Materials

The test apparatus and materials shall include:

a. Concave glass covers, one for each test reagent requiring a cover, having flat fire-polished rims, 25 mm (1 inch) in diameter.
b. Commercially available non-abrasive cleaner containing 4% butyl cellosolve.
c. A 5 ± 0.5 percent solution of sodium hypochlorite (bleach solution).
d. Baking soda (a mild abrasive household cleaner).
e. A clean, soft, white cloth.

Copyright National Electrical Manufacturers Association
Provided by IHS under license with NEMA
No reproduction or networking permitted without license from IHS
Not for Resale

f. A stiff nylon bristle brush, such as a nail brush.
g. Cotton balls.
h. Cellulose sponge 75 x 100 x 50 mm (3 x 4 x 2 inch).
i. Overhead white fluorescent lights with bulb(s) positioned parallel to the line of sight and providing an intensity of 800 to 1100 lux (75 to 100 foot-candles) on the specimen surface.
j. Water.
k. Acetone (non-oily nail polish remover).
l. 1 kilogram mass.

3.4.3 Test Specimens

The test specimen shall have an area sufficient to permit placing all 15 of the test reagents on its surface in two lines. Individual stains shall be placed about 50 mm (2 inches) apart. A 100 x 400 mm (4 x 16 inch) specimen is adequate.

3.4.4 Test Reagents

Reagents shall be kept in closed containers to avoid change in concentration. Perishable food items shall be kept refrigerated.

Reagent Number	Stain	Preparation Notes	Application
1	Distilled water	as received	apply 2 drops (6mm spot) cover with watch glass
2	Ethyl alcohol solution	A solution of 50% ethyl alcohol and 50% distilled water	as above
3	Acetone	as received	as above
4	Household ammonia	as received (non-sudsing type)	as above
5	10% Citric acid	A solution of 10% citric acid in distilled water	as above
6	Vegetable oil	as received	as above
7	Fresh coffee	1 teaspoon instant coffee per 180 ml of distilled water	as above
8	Fresh tea	Brew 1 tea bag per 120 ml distilled boiling water for 2 minutes	as above
9	Catsup	as received	as above
10	Yellow mustard	as received	as above
11	10% Povidone iodine	as received	as above
12	Black permanent marker	as received	mark spot (6mm spot) do not cover
13	#2 pencil	as received	as above
14	Wax crayon	as received	as above
15	Black paste shoe polish	as received	apply spot (6mm spot) do not cover

Copyright National Electrical Manufacturers Association
Provided by IHS under license with NEMA
No reproduction or networking permitted without license from IHS
Not for Resale

3.4.5 Test Procedure

a. Using the commercial cleaner and water, clean the surface of the test specimen with a clean, soft, white cloth. Rinse the specimen thoroughly and dry using another clean, soft, white cloth. Allow to dry completely at a temperature of $23^{o} \pm 2^{o}C$ ($73.4^{o} \pm 3.6^{o}F$).

b. Position the test specimen on a flat, level, horizontal surface (table or bench) and tape or weigh it down so there will not be any variation from the horizontal plane.

c. Place a 6mm (1/4 inch) spot of each test reagent upon the surface of the test specimen. As each individual test reagent is deposited, place one of the glass covers, concave side down, over the test reagent. Next, move the glass cover gently while in contact with the surface of the material undergoing testing until the test reagent is both under and outside the glass cover. The entire circular rim of the glass cover shall be wetted by the test reagent. The test specimen shall be marked so that each test reagent is identified.

d. The test specimen shall stand undisturbed for 16 to 24 hours. Remove the glass covers and subject the test specimen to the cleaning procedures to remove the staining reagents.

e. After each cleaning procedure ,place the sample, without preinspection, on a table and then view it at an eye-to-specimen distance of approximately 750 to 900 mm (30 to 36 inches) and at an angle of approximately 45° to 75° from the horizontal plane (table surface). Rotate the specimen in the plane of the table and view from all directions. Direct sunlight or other angle light sources, which will accentuate or minimize the effect, shall be avoided.

f. Cleaning Procedures:

1. Flush the surface with water and wipe gently with the sponge moistened with water. Blot the test specimen dry with a clean, soft, white cloth. If the test reagent is removed by this procedure, it shall be graded "0." If any stains remain, proceed to step 2.
2. Wet the test specimen surface with the commercial cleaner. Moisten the cellulose sponge with water and place a 1 kilogram (2.20 lb.) weight on its top. Push the weighted sponge back and forth without downward pressure for 25 cycles. Rinse the test specimen with water and wipe dry using a clean, soft, white cloth. If the test reagent is removed by this step, it shall be graded (1). If any stains remain, proceed to step 3.
3. Wet the test specimen surface with the commercial cleaner and add baking soda to achieve a paste consistency. Using a stiff nylon bristle brush, scrub the remaining areas where staining reagents can still be observed for 25 cycles. The specimen shall not be rubbed so as to permanently mar the surface finish. Rinse the test specimen with water and wipe dry using a clean, soft, white cloth. If the test reagent is removed by this procedure, it shall be graded (2). If any stains remain, proceed to step 4.
4. Using a cotton ball saturated with the acetone, rub the stain gently for up to two minutes. Rinse the specimen with water and wipe dry using a clean, soft, white cloth. If the test reagent is removed by this procedure it shall be graded (3). If any stains remain, proceed to step 5.
5. Place a cotton ball saturated with hypochlorite bleach on the stain and allow it to remain in contact for a period of two minutes. Rinse the specimen with water and wipe dry using a clean, soft, white cloth. If the test reagent is removed by this procedure, it shall be graded (4).
6. If any test reagent remains visible after step 5, the specimen shall be graded (5).

3.4.6 Test Report

The cleanability shall be reported as follows:

a. Add the results for each of the 15 stains. The range shall be 0 through 75.

--`,,`,,`-`-`,,`,,`,`,,`---

Copyright National Electrical Manufacturers Association
Provided by IHS under license with NEMA
No reproduction or networking permitted without license from IHS
Not for Resale

A typical example is shown below.

Test Reagent Number	Stain	Score
1	Distilled water	0
2	50:50 Ethyl alcohol	0
3	Acetone	0
4	Household ammonia	0
5	10% Citric acid	0
6	Vegetable oil	0
7	Fresh coffee	0
8	Fresh tea	0
9	Catsup	1
10	Yellow mustard	2
11	10% Povidone iodine	2
12	Black Permanent Marker	2
13	#2 pencil	2
14	Wax crayon	3
15	Black paste shoe polish	4
	Total Score:	16

b. The stain resistance shall be reported as one of the following:
   1. No effect—all stain reagents removed with no impairment to surface appearance. Any change in gloss due to the cleaning procedure is permitted.
   2. Moderate effect—a difficult to perceive stain visible from all angles and directions. Any change in gloss due to the cleaning procedure is permitted.
   3. Severe effect—any easy to perceive stain or disturbed surface visible from all angles and directions.

   List the reagent(s) that caused moderate or severe effect.

3.5 BOILING WATER RESISTANCE

3.5.1 Scope

This test measures the ability of the surface of high-pressure decorative laminate to maintain its color and surface finish when subjected to boiling water.

3.5.2 Test Apparatus and Materials

The test apparatus and materials shall include:

a. A flat-bottom heating vessel in accordance with Figure 3-2.
b. Hot plate or equivalent.
c. Tongs to lift the heating vessel.
d. Overhead white fluorescent lights with bulb(s) positioned parallel to the line of sight and providing an intensity of 800 to 1100 lux (75 to 100 foot-candles) on the specimen surface.
e. A PVAc (white glue) adhesive utilized in accordance with the manufacturer's instructions.
f. Particle board that is 19 mm (3/4 inch) thick and 720 kg/m^3 (45 lb./ft^3) nominal density and sanded to thickness with 100 grit paper (International Paper Uniflake Industrial "AA" Vinyl Grade).
g. A clean, soft, white cloth.

Copyright National Electrical Manufacturers Association
Provided by IHS under license with NEMA
No reproduction or networking permitted without license from IHS
Not for Resale

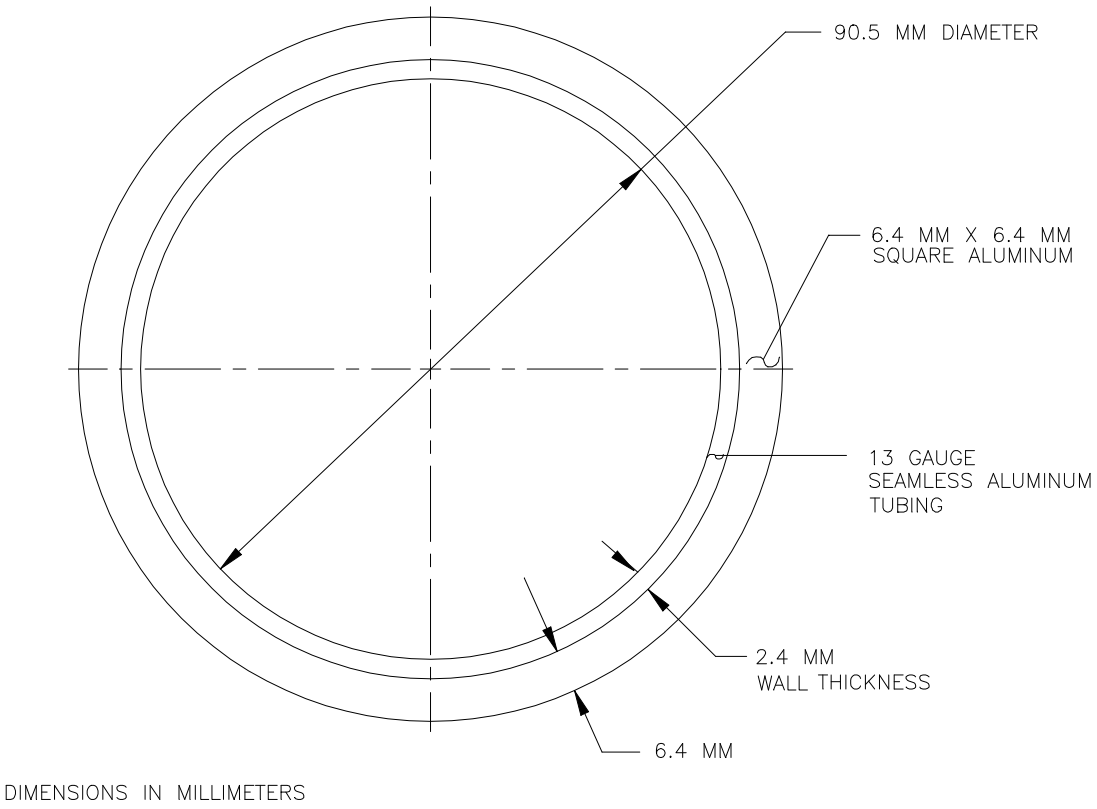

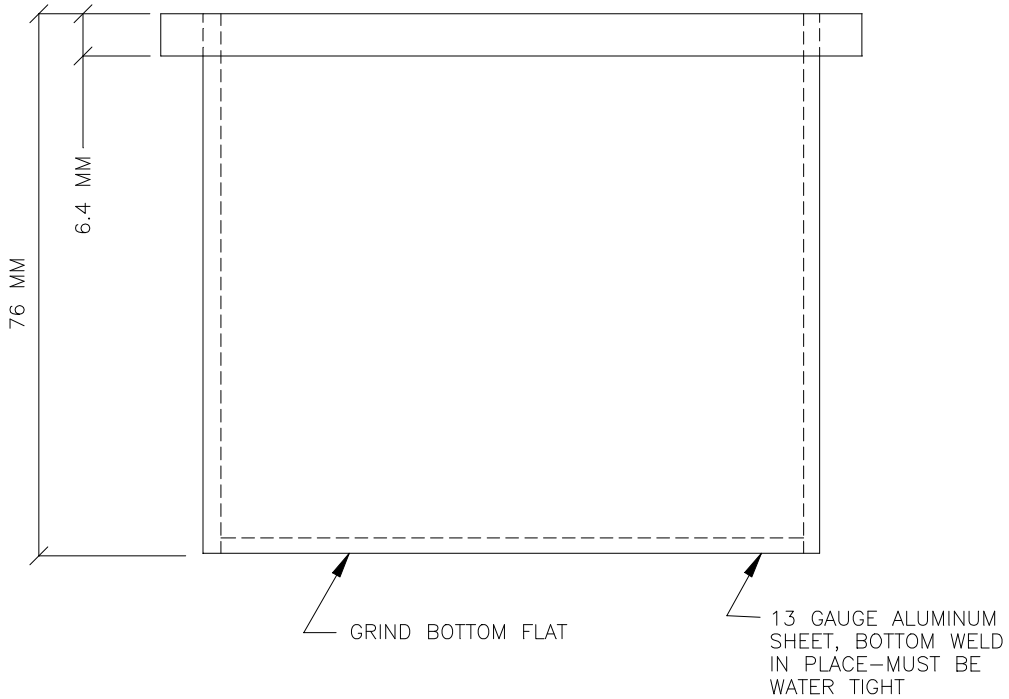

Figure 3-2
HEATING VESSEL

--`,,`-`-`,,`,,`,`,,`---

Copyright National Electrical Manufacturers Association
Provided by IHS under license with NEMA
No reproduction or networking permitted without license from IHS

Not for Resale

3.5.3 Test Specimens

The test specimen shall be at least 200 x 200 mm (8 x 8 inches) x thickness and shall be bonded to particle board with PVAc adhesive. Compact laminates shall be tested unbonded. The test specimen shall be conditioned for at least 48 hours prior to the test at a temperature of $23^{o} \pm 2^{o}C$ ($73.4^{o} \pm 3.6^{o}F$) and a relative humidity of 50 ± 5 percent.

3.5.4 Test Procedure

a. Fill the heating vessel to 12 mm (1/2 inch) from the rim with water and heat it until the water boils vigorously.

b. Examine the test specimen carefully prior to the test and note the conditions of the color and surface finish.

c. With the tongs, carefully remove the vessel from the hot plate and pour approximately 10 ml of boiling water on the horizontal surface of the test specimen and set the vessel containing the remainder of the boiling water in this puddle.

d. Allow the vessel to remain in place for 20 minutes.

e. Remove the vessel with the tongs. Wipe the specimen with a clean, soft, white cloth to remove any residual contaminants and dry thoroughly. Allow the specimen to stabilize at room temperature for a minimum of 24 hours.

f. Examine the conditioned test specimen by placing it, without preinspection, on a table and then view it at an eye-to-specimen distance of approximately 750 to 900 mm (30 to 36 inches) and at an angle of approximately 45° to 75° from the horizontal plane (table surface). The specimen shall be rotated in the plane of the table and viewed from all directions. Direct sunlight or other angle light sources, which will accentuate or minimize the effect, shall be avoided.

g. Record observations.

3.5.5 Factors Influencing the Accuracy of the Test

As water boils and evaporates, dissolved minerals are left behind and will adhere to the vessel walls forming scale which is an effective insulator. This scale must be removed periodically, or test results can be altered significantly. Because of this, the use of distilled or demineralized water is recommended.

3.5.6 Test Report

The specimen shall be examined for blisters, crazing, delamination, whitening, or cracking. The resistance to boiling water shall be reported as:

a. No effect—no change in color or surface finish.

b. Slight effect—a change in color or surface finish only visible at certain angles or directions.

c. Moderate effect—a change in color or surface finish visible from all angles and directions, but does not appreciably alter the original condition of the specimen.

d. Severe effect—a change in color or surface finish which obviously and markedly alters the original condition of the specimen.

3.6 HIGH TEMPERATURE RESISTANCE

3.6.1 Scope

This test measures the ability of the surface of high-pressure decorative laminate to maintain its color and surface finish when subjected to a high temperature.

Copyright National Electrical Manufacturers Association
Provided by IHS under license with NEMA
No reproduction or networking permitted without license from IHS
Not for Resale

3.6.2 Test Apparatus and Materials

The test apparatus and materials shall include:

a. A flat-bottom heating vessel in accordance with Figure 3-2.
b. Hot plate or equivalent.
c. Bath wax
d. Dial thermometer reading from 100° to 250°C (212° to 482°F) in 2°C gradations or the equivalent. Mercury-filled glass thermometers shall not be used.
e. Tongs to lift the heating vessel
f. Overhead white fluorescent lights with bulb(s) positioned parallel to the line of sight and providing an intensity of 800 to 1100 lux (75 to 100 foot-candles) on the specimen surface.
g. A PVAc (white glue) adhesive utilized in accordance with the manufacturer's instructions.
h. Particle board that is 19 mm (3/4 inch) thick and 720 kg/m^3 (45 lb./ft^3) nominal density and sanded to thickness with 100 grit paper (International Paper Uniflake Industrial "AA" Vinyl Grade).
i. Acetone (non-oily nail polish remover).

3.6.3 Test Specimens

The test specimen shall be a minimum of 200 x 200 mm (8 x 8 inches) x thickness and shall be bonded to particle board with PVAc adhesive. Compact laminates shall be tested unbonded. The specimen shall be conditioned for at least 48 hours prior to the test at a temperature of 23° ± 2°C (73.4° ± 3.6°F) and a relative humidity of 50 ± 5 percent.

3.6.4 Test Procedure

a. Examine the test specimen carefully prior to the test and note the conditions of the color and surface finish.
b. Fill the heating vessel from 1/2 to 2/3 full with bath wax. Heat the wax until it reaches a temperature of 185°C (365°F). Do not overheat as fire may result. Using the tongs, remove the vessel from the hot plate and allow the wax to cool to 180° ± 1°C (356° ± 2°F). Then, using the tongs, place the vessel on the test specimen and allow it to remain in place for 20 minutes.
c. Remove the vessel with the tongs and allow the specimen to stabilize at room temperature for a minimum of 24 hours.
d. Clean the specimen with acetone to remove residual wax. Examine the conditioned test specimen by placing it, without preinspection, on a table and then viewing it at an eye-to-specimen distance of approximately 750 to 900 mm (30 to 36 inches) and at an angle of approximately 45° to 75° from the horizontal plane (table surface). The specimen shall be rotated in the plane of the table and viewed from all directions. Direct sunlight or other angle light sources, which will accentuate or minimize the effect, shall be avoided.
e. Record observations.

3.6.5 Factors Influencing the Accuracy of the Test

Contamination or buildup of wax on the bottom of the vessel may affect the test results.

3.6.6 Test Report

The specimen shall be examined for blisters, crazing, delamination, whitening, or cracking. The resistance to high temperature shall be reported as one of the following:

a. No effect—no change in color or surface finish.
b. Slight effect—a change in color or surface finish that is only visible at certain angles or directions.
c. Moderate effect—a change in color or surface finish that is visible from all angles and directions, but does not appreciably alter the original condition of the specimen.

Copyright National Electrical Manufacturers Association
Provided by IHS under license with NEMA
No reproduction or networking permitted without license from IHS
Not for Resale

d. Severe effect—a change in color or surface finish that obviously and markedly alters the original condition of the specimen.

3.7 LINEAR GLASS SCRATCH RESISTANCE *(VALUES UNDER CONSIDERATION)*

3.7.1 Scope

This test measures the ability of the surface of a high-pressure decorative laminate to resist scratching by a material of similar sharpness and hardness to silica.

3.7.2 Test Apparatus and Materials

The test apparatus and materials shall include:

a. Balanced Beam Scrape Adhesion and Mar Tester (Gardner Catalog No. SG-8101 or equivalent) as modified in Figure 3-3.
b. Scratch tool fixture as shown in Figure 3-4.
c. Fine adjustable counterweight as shown in Figure 3-5.
d. Adjustable mass holder as shown in Figure 3-5.
e. New, precleaned, plain glass microscope slides, 75 x 25 mm (3 x 1 inch) (Corning Catalog No. 2947 or equivalent).
f. 20, 50, 100, and 200 gram weights (masses).
g. Small electronic balance for calibration. The capacity shall be a minimum of 150 grams and accurate to ± 0.1 gram minimum.

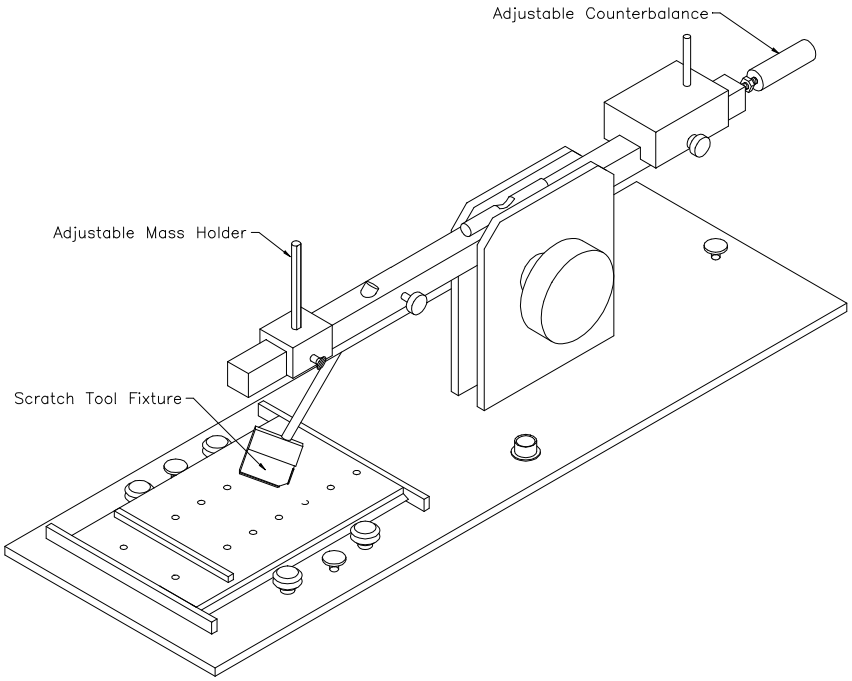

Figure 3-3
MODIFIED SCRATCH TESTER

Copyright National Electrical Manufacturers Association
Provided by IHS under license with NEMA
No reproduction or networking permitted without license from IHS
Not for Resale

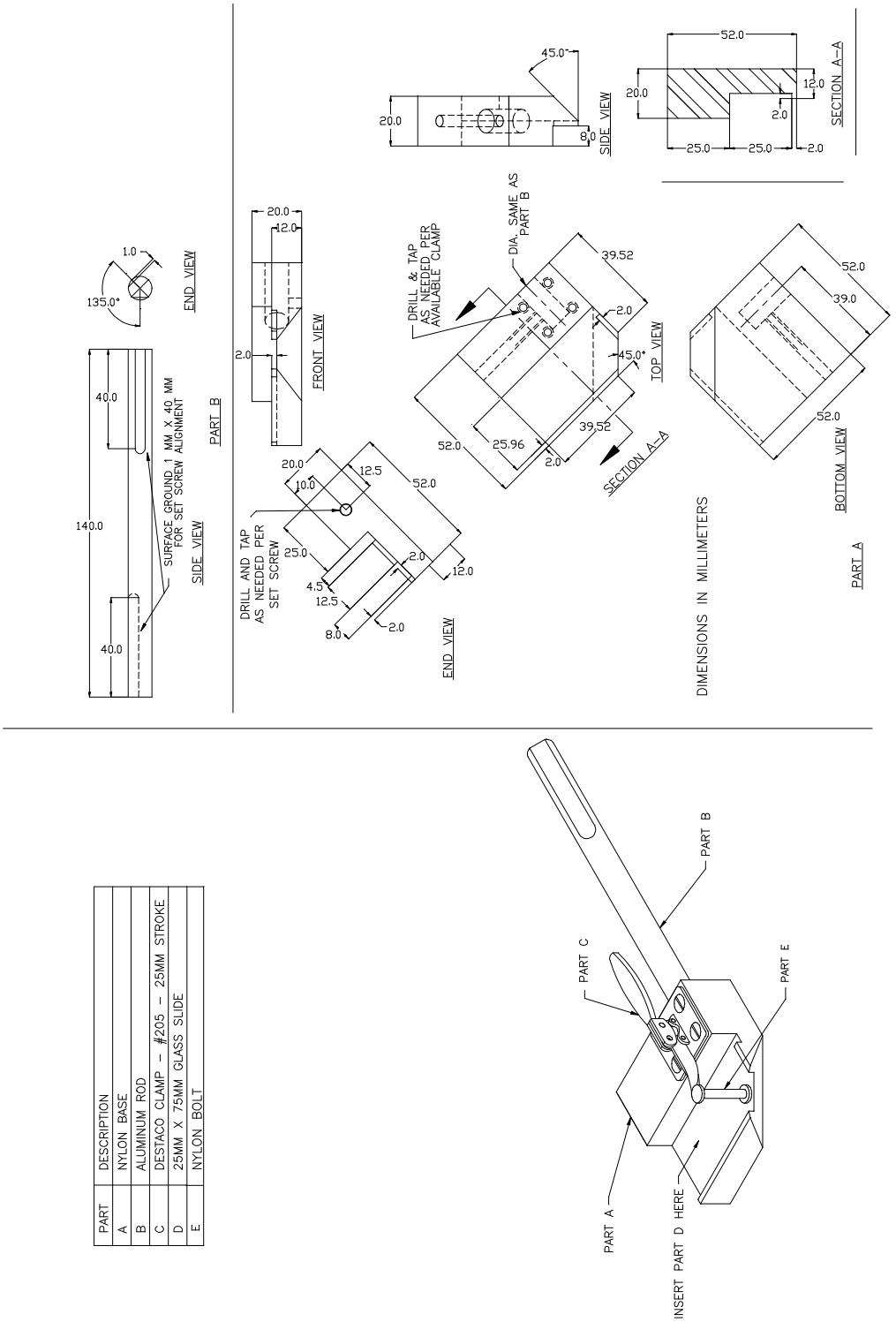

PART	DESCRIPTION
A	NYLON BASE
B	ALUMINUM ROD
C	DESTACO CLAMP – #205 – 25MM STROKE
D	25MM X 75MM GLASS SLIDE
E	NYLON BOLT

Figure 3-4
SCRATCH TOOL FIXTURE

--`,,`-`-`,,`,,`,`,,`---

Copyright National Electrical Manufacturers Association
Provided by IHS under license with NEMA
No reproduction or networking permitted without license from IHS

Not for Resale

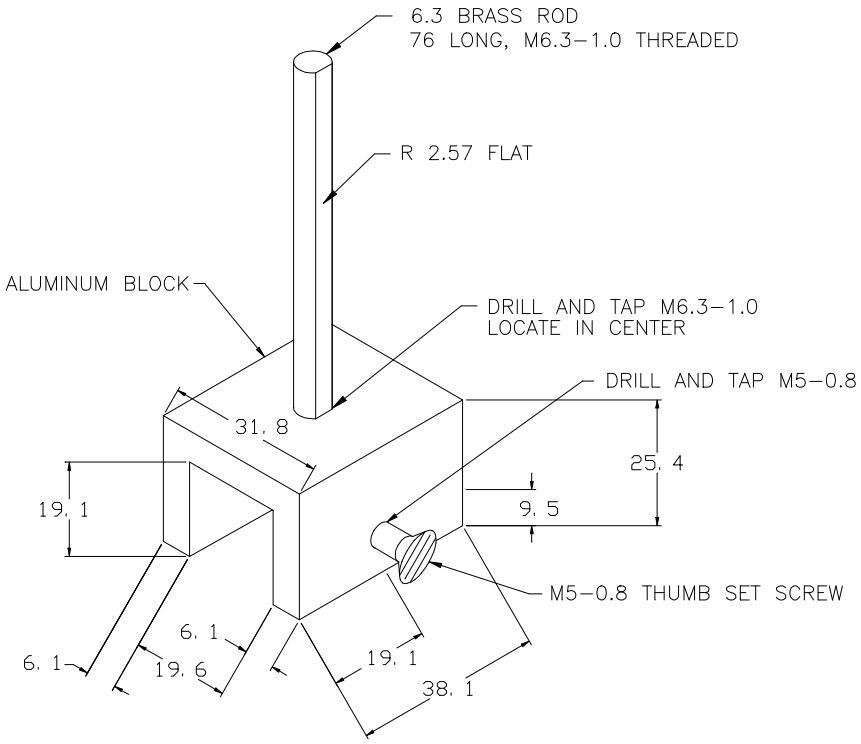

ADJUSTABLE MASS HOLDER

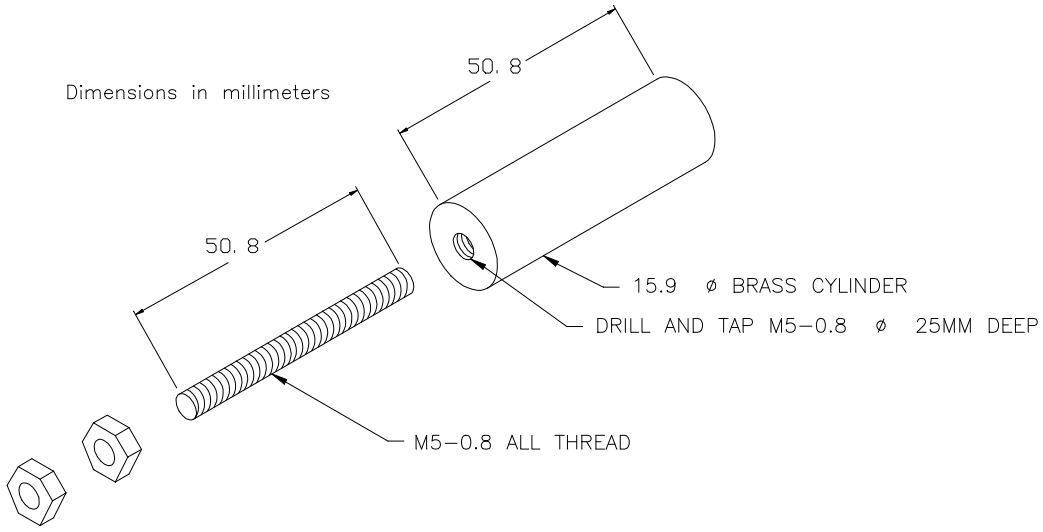

ADJUSTABLE COUNTERBALANCE

Figure 3-5
ADJUSTABLE MASS HOLDER AND COUNTERBALANCE

Copyright National Electrical Manufacturers Association
Provided by IHS under license with NEMA
No reproduction or networking permitted without license from IHS
Not for Resale

h. Viewing enclosure as shown in Figure 3-6. The enclosure shall be of the dimensions shown in Figure 3-6 with a matte black finish over the interior surface. The light source shall consist of a white reflector with an incandescent style screw-in base and shall have an aperture of approximately 140 mm (5 1/2 in.). The bulb shall be of compact fluorescent type rated at 26 watts mounted such that the specimen is located vertically below the bulb base at a distance of approximately 600 mm (24 in.). The light source shall provide illumination of 900 lux ± 100 lux at the specimen surface (Bulb type FLC26 GE 26watt/120volt/60Hz AC340ma or equivalent).

i. Isopropyl alcohol.

j. Clean, soft, white cloth.

k. Viewing mask as per Figure 3-7.

l. 45° viewing stand as shown in Figure 3-8.

3.7.3 Test Specimens

Test specimens shall be 100 x 150 mm (4 x 6 inches) x thickness. Samples shall be cut such that the 150 mm dimension is in the cross-machine direction. A minimum of three specimens shall be tested. All specimens shall be conditioned for at least 48 hours prior to the test at a temperature of 23° ± 2°C (73.4^{o} ± 3.6^{o}F) and a relative humidity of 50 ± 5 percent.

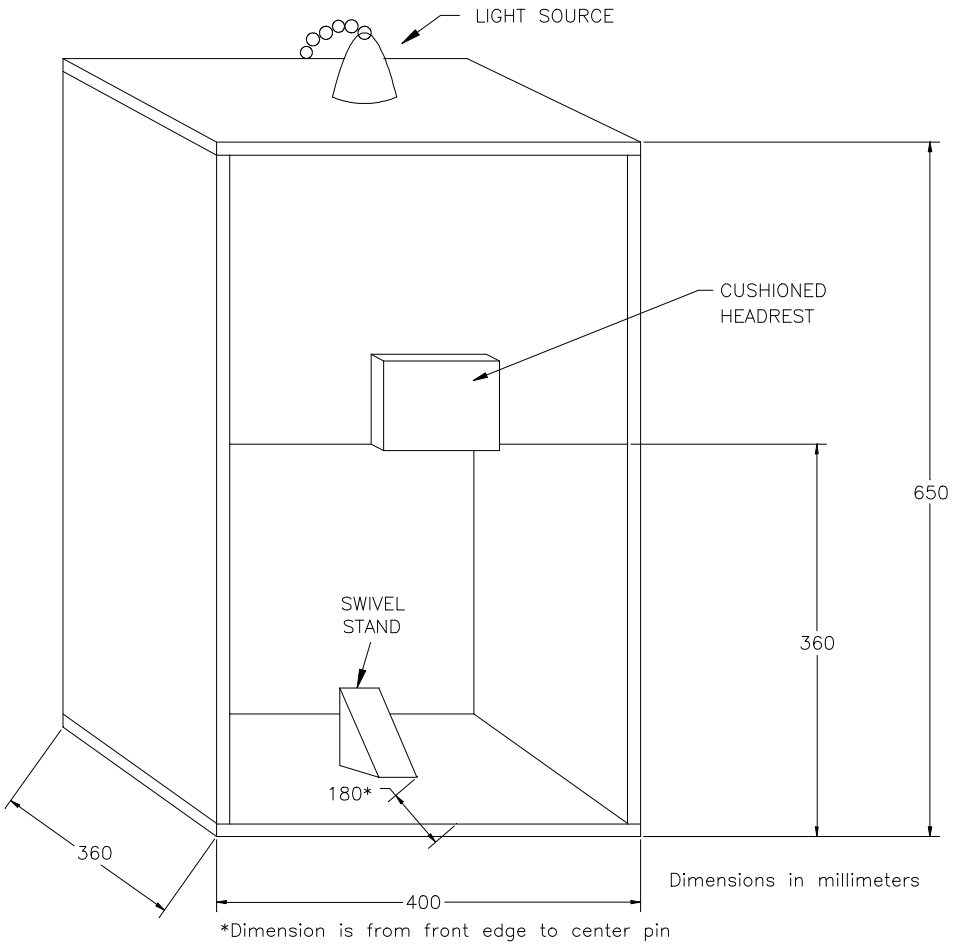

Figure 3-6
VIEWING ENCLOSURE

Copyright National Electrical Manufacturers Association
Provided by IHS under license with NEMA
No reproduction or networking permitted without license from IHS
Not for Resale

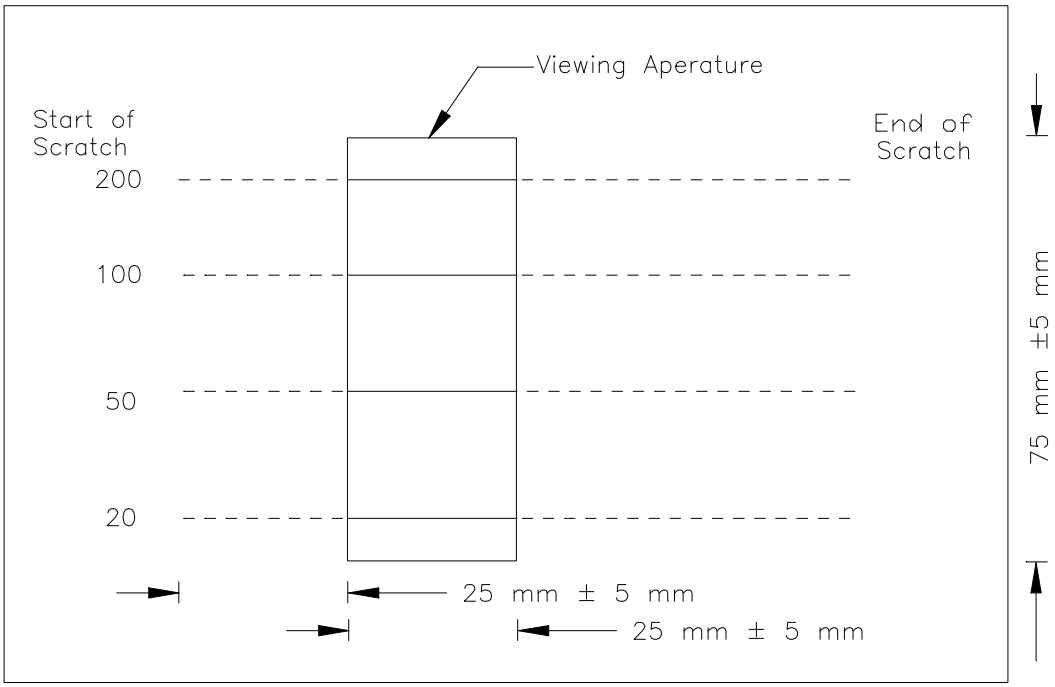

Figure 3-7
VIEWING MASK

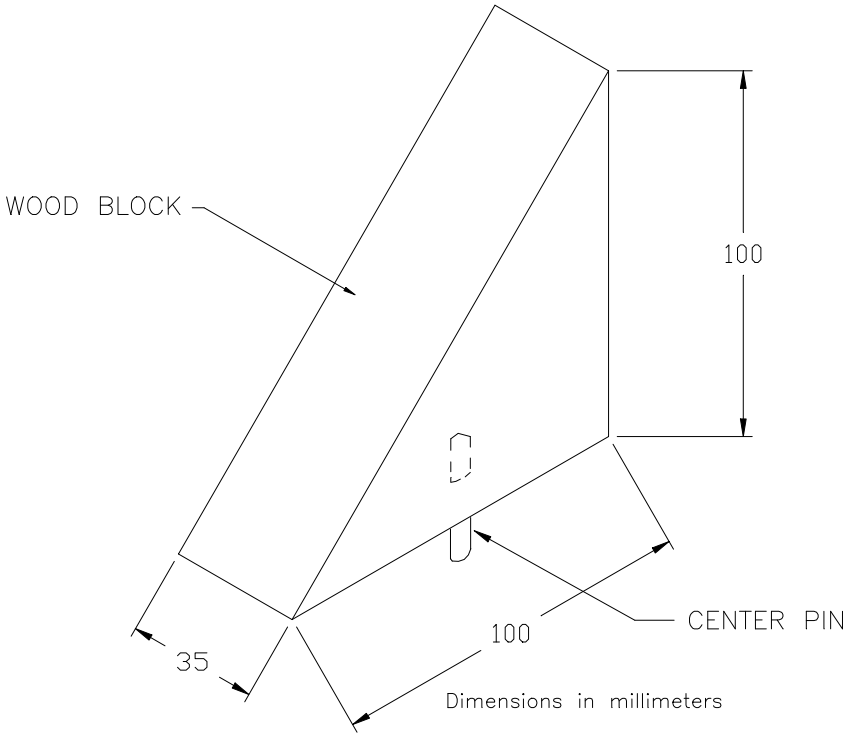

Figure 3-8
45° VIEWING STAND

Copyright National Electrical Manufacturers Association
Provided by IHS under license with NEMA
No reproduction or networking permitted without license from IHS
Not for Resale

3.7.4 Calibration of Test Apparatus

a. Adjust the base of the test unit so that the base is level using the bubble level and the three leveling screws.

b. Insert a microscope slide into the holder and clamp in place.

c. Secure the specimen to the test unit.

d. Carefully lower the glass slide to the laminate surface. For the purpose of adjustment, the glass should contact the laminate in a location that will not be tested.

e. Adjust the position of the scratch tool arm in the beam arm such that the beam arm is level when the corner of the glass contacts the laminate surface. This is indicated by the level mounted on the top of the beam arm.

f. Adjust the mass holder on the beam arm such that the support pin is directly above the point at which the glass slide contacts the laminate.

g. Calibrate the calibration balance per the manufacturer's instructions.

h. Support the beam arm on the balance at a point even with the support pin of the mass holder so that the glass slide does not contact the laminate surface but is within 1 mm of the laminate surface. Suspend the beam from the balance from above via the thumb screw of the mass holder, or support the beam on the balance using an adjustable support from below.

i. Place the 100 g mass on the adjustable mass holder.

j. Adjust the counterbalance weight so that the calibration balance indicates 100 $\pm$ 0.5 grams.

3.7.5 Test Procedure

a. Clamp a glass slide in the holder so that a new, undamaged corner of the glass slide will come in contact with the laminate. Exercise caution not to use damaged corners of the slides.

b. Move the sled close to the pivot pole on the test unit.

c. Secure the test specimen to the sled such that the scratch will occur in the long direction.

d. Place the 20 gram mass on the adjustable mass holder.

e. Carefully lower the corner of the glass slide onto the laminate surface. The laminate surface shall be free of other scratches, nicks, gouges, etc. in the area of contact. If the corner of the slide fractures, change to a fresh corner of the slide and perform this scratch on a different location of the test specimen than where the fracture occurred.

f. Move the sled slowly and steadily away from the pivot pole to produce a single scratch in the laminate.

g. Lift the glass slide from the surface of the laminate and lock the beam in the up position.

h. Repeat steps a through g for each of the 50, 100, and 200 gram masses. Reposition the test specimen each time so that there are approximately 5 to 10 mm (1/4 inch) between scratches.

i. Remove the test specimen from the sled and clean the surface of the sample with 70% isopropyl alcohol and a clean, soft, white cloth.

j. Place the specimen behind the mask so that it is oriented as shown in Figure 3-7 so that the second 25 mm (1 in.) increment of the scratch is displayed through the mask aperture.

k. Place the masked specimen in the center of the viewing enclosure so that the sample is inclined approximately 45° from the bottom of the enclosure with the 200 gram scratch oriented horizontally and at the top of the series of scratches. The masked specimen may be rotated up to 180° in the horizontal plane in order to accentuate the scratches.

l. The observer's forehead shall be against the headrest when viewing the specimen.

m. Grade each scratch location as follows using up to 5 seconds to observe the test specimen:

0 = no scratch visible at any rotational angle.

1 = continuous scratch visible across the aperture.

n. Record observations.

Copyright National Electrical Manufacturers Association
Provided by IHS under license with NEMA
No reproduction or networking permitted without license from IHS
Not for Resale

3.7.6 Factors Influencing the Accuracy of the Test

a. The corners of the microscope slides should be uniform and without chips and breakage.

b. The speed of the sled should be steady and continuous. Stopping and restarting the sled along the scratch is not permitted.

3.7.7 Test Report

Report the scratch resistance as the lowest mass at which a grade of "1" occurs or greater than 200 g if no grade of "1" is recorded.

Note—The scratch resistance of high-pressure decorative laminate is influenced by lightness and gloss. In general terms, light colors show better resistance to scratching than dark colors. For a given color, prints are better than solid colors. Textured surfaces have better scratch resistance than smooth surfaces. Chart 3-1 shows the relative effect of lightness and gloss on the scratch resistance performance of high-pressure decorative laminates. The choice of surface finish, color, and print can be made to suit the particular application for which it is intended.

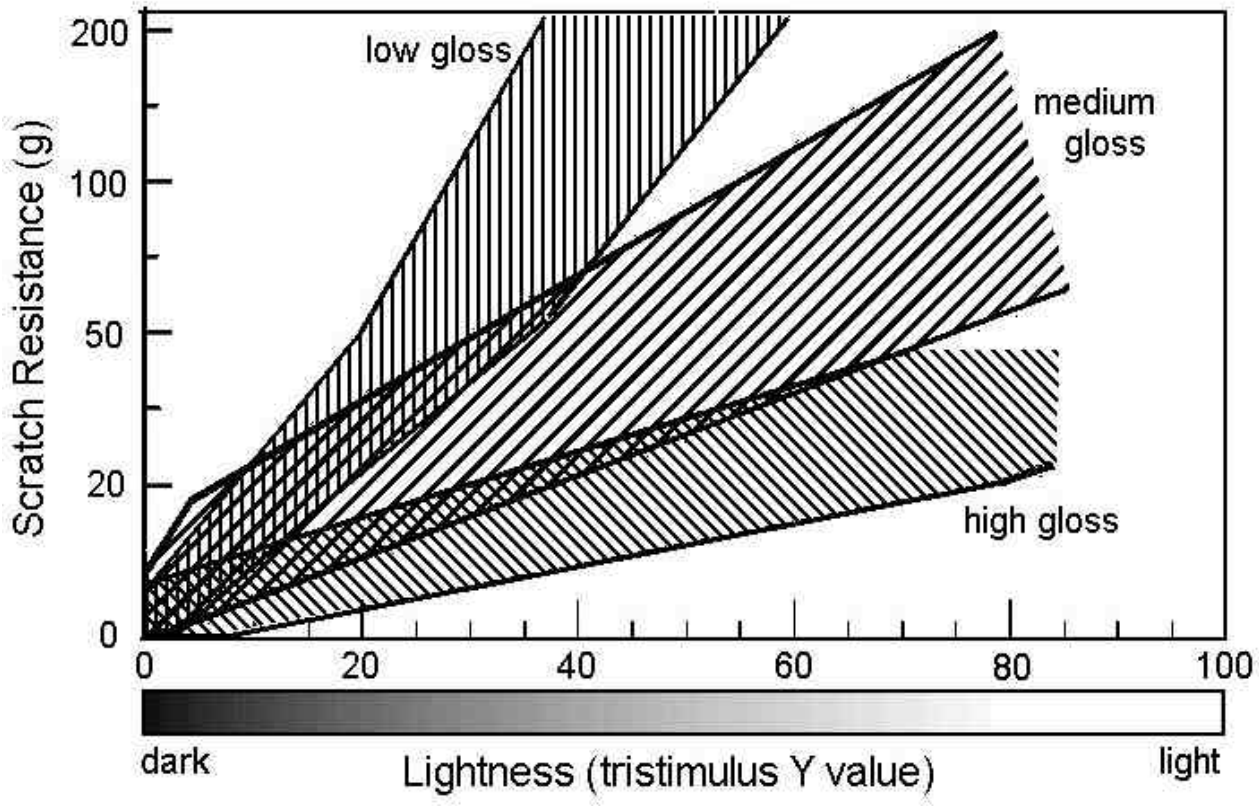

Chart 3-1
RELATION OF SCRATCH PERCEPTION TO LIGHTNESS AND GLOSS OF TEXTURED FINISH HPDL

Copyright National Electrical Manufacturers Association
Provided by IHS under license with NEMA
No reproduction or networking permitted without license from IHS
Not for Resale

3.8 BALL IMPACT RESISTANCE

3.8.1 Scope

This test measures the ability of high-pressure decorative laminate to resist fractures due to impact by a large diameter ball.

3.8.2 Test Apparatus and Materials

The test apparatus and materials shall include:

a. A free-fall test apparatus of the type shown in Figure 3-9, or the equivalent.
b. A polished stainless steel ball weighing 224 ± 3 grams, measuring 38.1 mm (1-1/2 inches) in diameter and having no damaged or flattened surface.
c. Clamping jig capable of holding the test specimen flat. See Figure 3-10, or the equivalent.
d. Black, water-washable marking pen (suitable for overhead transparencies).
e. A clean, damp, soft, white cloth.
f. Overhead white fluorescent lights with bulb(s) positioned parallel to the line of sight and providing an intensity of 800 to 1100 lux (75 to 100 foot-candles) on the specimen surface.
g. A PVAc (white glue) adhesive utilized in accordance with the manufacturer's instructions.
h. Particle board that is 19 mm (3/4 inch) thick and 720 kg/m^3 (45 lb./ft^3) nominal density and sanded to thickness with 100 grit paper (International Paper Uniflake Industrial "AA" Vinyl Grade).

3.8.3 Test Specimens

The test specimen shall be 300 x 300 mm (12 x 12 inches) and shall be bonded to particle board utilizing a PVAc adhesive. Compact laminates shall be supported with particle board without adhesive bonding. The test specimens shall be conditioned for at least 48 hours prior to the test at a temperature of 23° ± 2°C (73.4^o ± 3.6^{o}F) and a relative humidity of 50 ± 5 percent.

3.8.4 Test Procedure

a. Clamp the test specimen in the clamping jig and place it on the solid base of the free-fall test apparatus.
b. Adjust the height scale so that it touches the face of the test specimen.
c. Position the electromagnet at any arbitrary height above the test specimen.
d. Place the ball on the electromagnet and drop the ball. Catch the ball on the first rebound so that multiple impacts do not occur. Impact positions shall be at least 25 mm (1 inch) apart and 50 mm (2 inches) from the edge of the specimen.
e. Use the marking pen to ink over impact points caused by the ball. Use the clean, damp, soft, white cloth to wipe each impact point. Fractures may appear as hairline cracks, concentric circles, or chips.
f. Examine the impact spot for cracks and determine the result.
g. Raise or lower the electromagnet height as necessary and repeat steps d through f until the maximum height at which no cracking occurs is determined.
h. Drop the ball from the height determined in step g two additional times in different locations on the test specimen. If either drop fails, reduce the height by 25 mm (1 inch) and continue testing until a total of three successful results have been obtained at that height.

3.8.5 Factors Influencing Accuracy of the Test

a. Damaged or flattened balls should never be used.

Copyright National Electrical Manufacturers Association
Provided by IHS under license with NEMA
No reproduction or networking permitted without license from IHS
Not for Resale

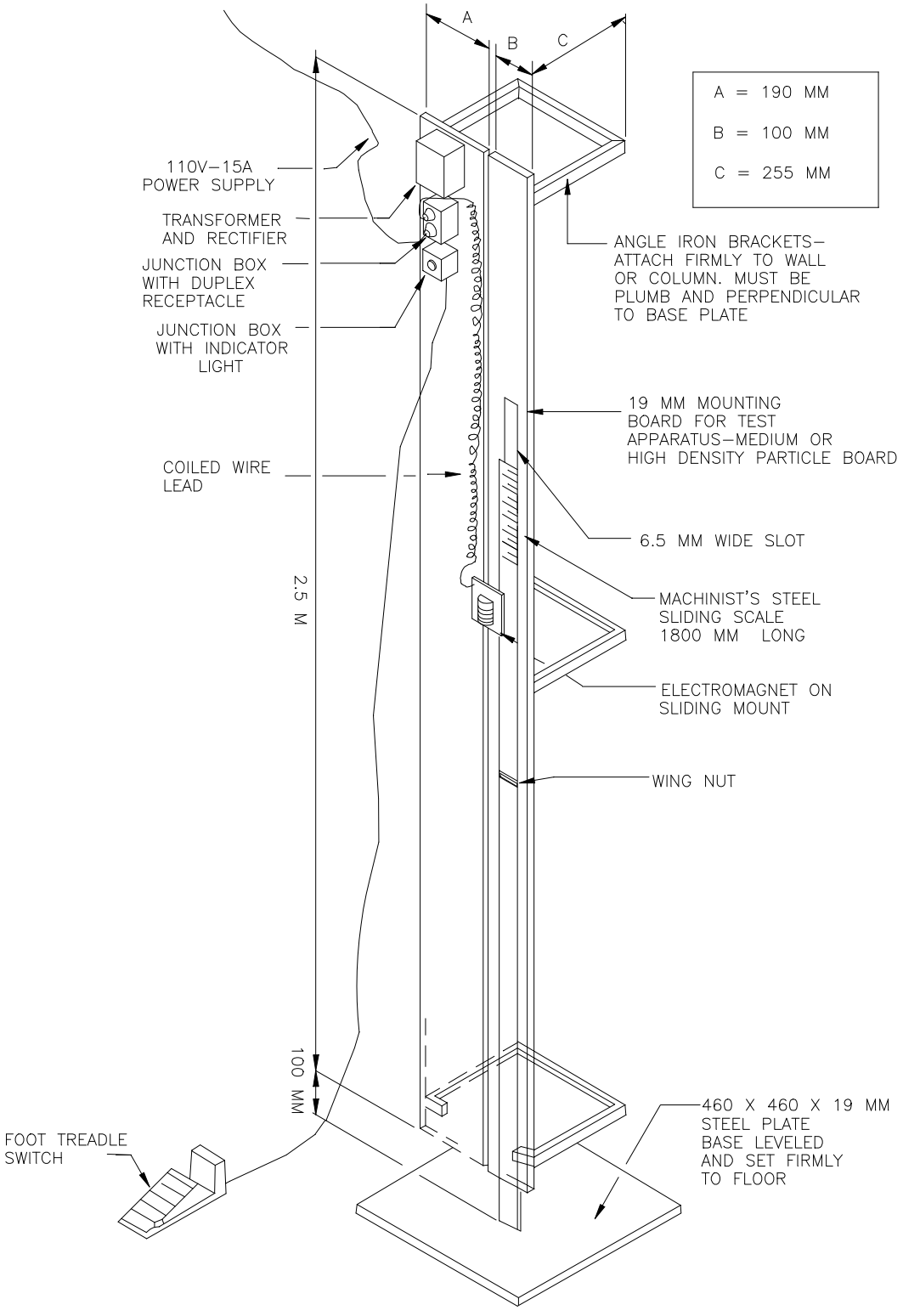

Figure 3-9
FREE-FALL IMPACT TEST APPARATUS

Copyright National Electrical Manufacturers Association
Provided by IHS under license with NEMA
No reproduction or networking permitted without license from IHS
Not for Resale

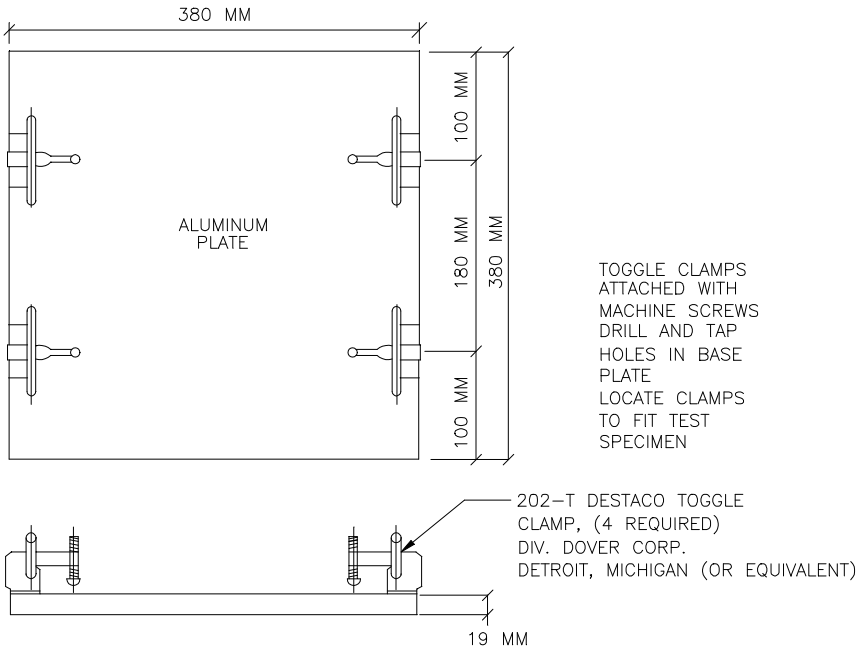

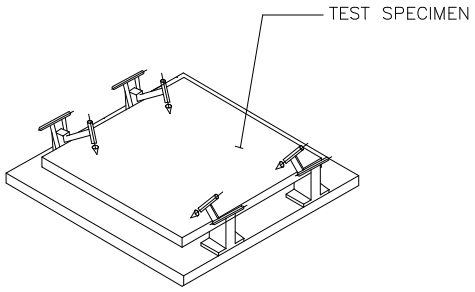

Figure 3-10
BALL IMPACT CLAMPING JIG

b. The test specimen and clamping jig should be completely supported on the solid base. Warped specimens or lack of support can affect results by as much as 100 percent.
c. The fall path of the ball should be precisely perpendicular to the specimen's surface.
d. Improperly conditioned test specimens can affect results drastically.

3.8.6 Test Report

The test report shall indicate the actual height of impact resistance.

3.9 DART IMPACT RESISTANCE

3.9.1 Scope

This test measures the ability of high-pressure decorative laminate to resist fracture due to impact by a small diameter ball.

Copyright National Electrical Manufacturers Association
Provided by IHS under license with NEMA
No reproduction or networking permitted without license from IHS
Not for Resale

3.9.2 Test Apparatus and Materials

The test apparatus and materials shall include:

a. A free-fall test apparatus of the type shown in Figure 3-11.

b. Impact dart weighing 25.0 ± 0.5 grams, consisting of a steel dart tipped with a 5 mm (0.195 inch) diameter ball having no damaged or flattened surface. See Figure 3-11.

c. The tube and darts shall be lubricated with a dry lubricant to minimize friction.

d. Black, water-washable marking pen (suitable for overhead transparencies).

e. Overhead white fluorescent lights with bulb(s) positioned parallel to the line of sight and providing an intensity of 800 to 1100 lux (75 to 100 foot-candles) on the specimen surface.

f. A clean, damp, soft, white cloth.

g. A PVAc (white glue) adhesive utilized in accordance with the manufacturer's instructions.

h. Particle board that is 19 mm (3/4 inch) thick and 720 kg/m^3 (45 lb./ft^3) nominal density and sanded to thickness with 100 grit paper (International Paper Uniflake Industrial "AA" Vinyl Grade)

3.9.3 Test Specimens

The test specimen shall be 200 x 200 mm (8 x 8 inches) and shall be bonded to particle board utilizing a PVAc adhesive. The test specimens shall be conditioned for at least 48 hours prior to the test at a temperature of 23° ± 2°C (73.4° ± 3.6°F) and a relative humidity of 50 ± 5 percent.

3.9.4 Test Procedure

a. Place the conditioned specimen face up on a rigid horizontal surface.

b. Position the test apparatus on the decorative face of the specimen so the edge of the round base is tangent to two edges of the square specimen at one 90° corner. The bottom of the circular base shall be flush against the face of the specimen. See Figure 3-12.

c. Position the dart at a height of 125 mm (5 inches) as indicated by the engraved numbers on the vertical tube and allow the dart to fall and impact against the face of the specimen. Catch the dart when it rebounds so that multiple impacts do not occur.

d. Move the test apparatus to the right 15 mm (5/8 inch) keeping the edge of the circular base tangent to the edge of the specimen.

e. Position the dart at a height of 150 mm (6 inches) and allow it to fall and impact against the face of the specimen. Again, catch the dart so that multiple impacts do not occur.

f. Again move the test apparatus to the right 15 mm (5/8 inch) as in step d, increase the height of the dart by 25 mm (1 inch), and allow it to fall and impact against the face of the specimen. Again, do not allow multiple impacts.

g. Repeat step f along one edge of the specimen as shown in Figure 3-12.

h. Use the marking pen to ink over impact points caused by the dart. Use the clean, damp, soft, white cloth to wipe each impact point. Fractures may appear as hairline cracks, concentric circles, or chips.

i. Starting at the lowest impact point, follow the path of increasing impacts until three consecutive failures occur. If three consecutive impacts are not observed, continue with step f along the next edge. The impact resistance height is the value immediately preceding the series of three fractures.

3.9.5 Factors Influencing Accuracy of the Test

a. Damaged or flattened darts should never be used.

b. The test specimen should be completely supported on the solid base. Warped specimens or lack of support can affect results by as much as 100 percent.

Copyright National Electrical Manufacturers Association
Provided by IHS under license with NEMA
No reproduction or networking permitted without license from IHS
Not for Resale

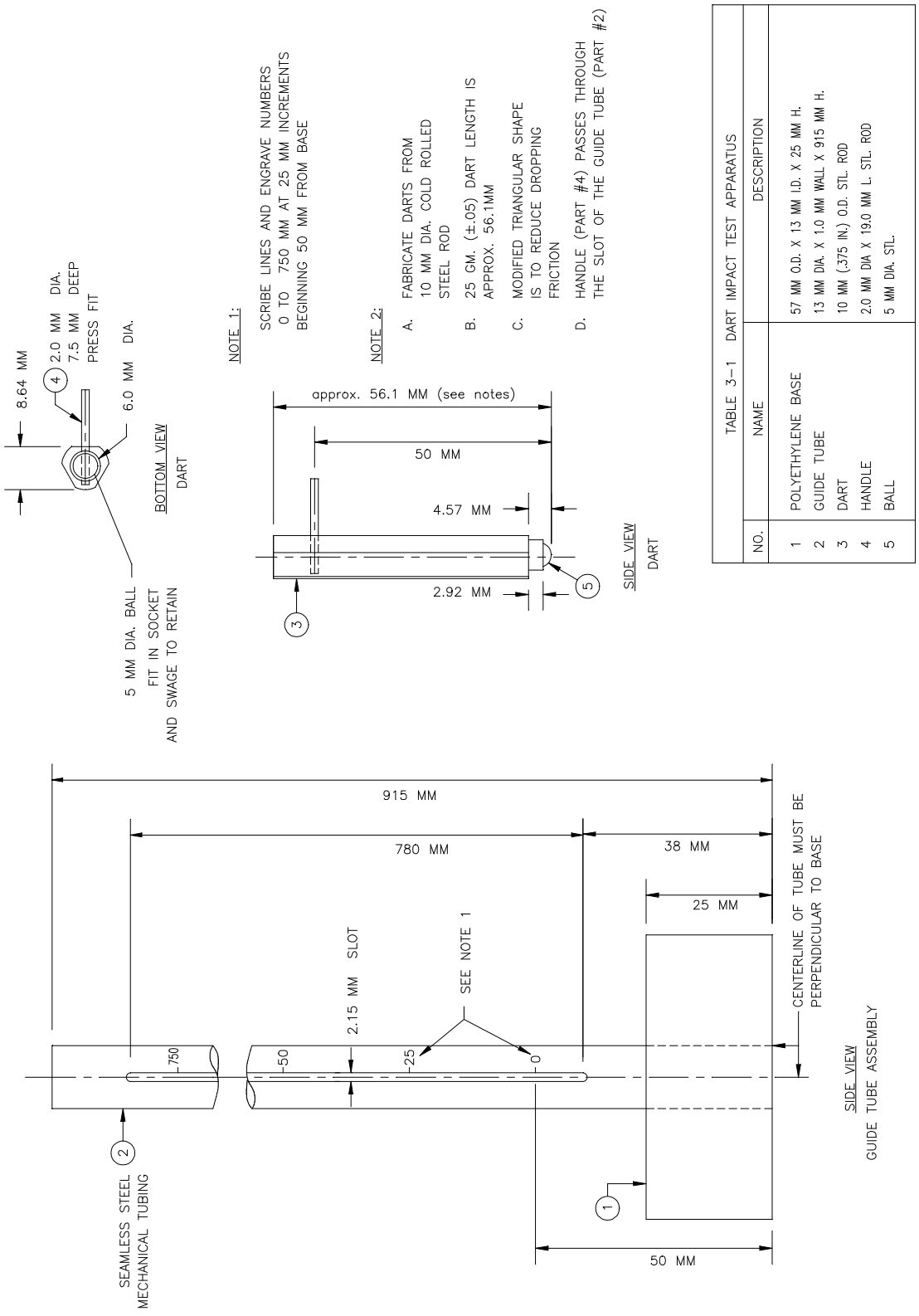

Figure 3-11
DART IMPACT TESTER

Copyright National Electrical Manufacturers Association
Provided by IHS under license with NEMA
No reproduction or networking permitted without license from IHS
Not for Resale

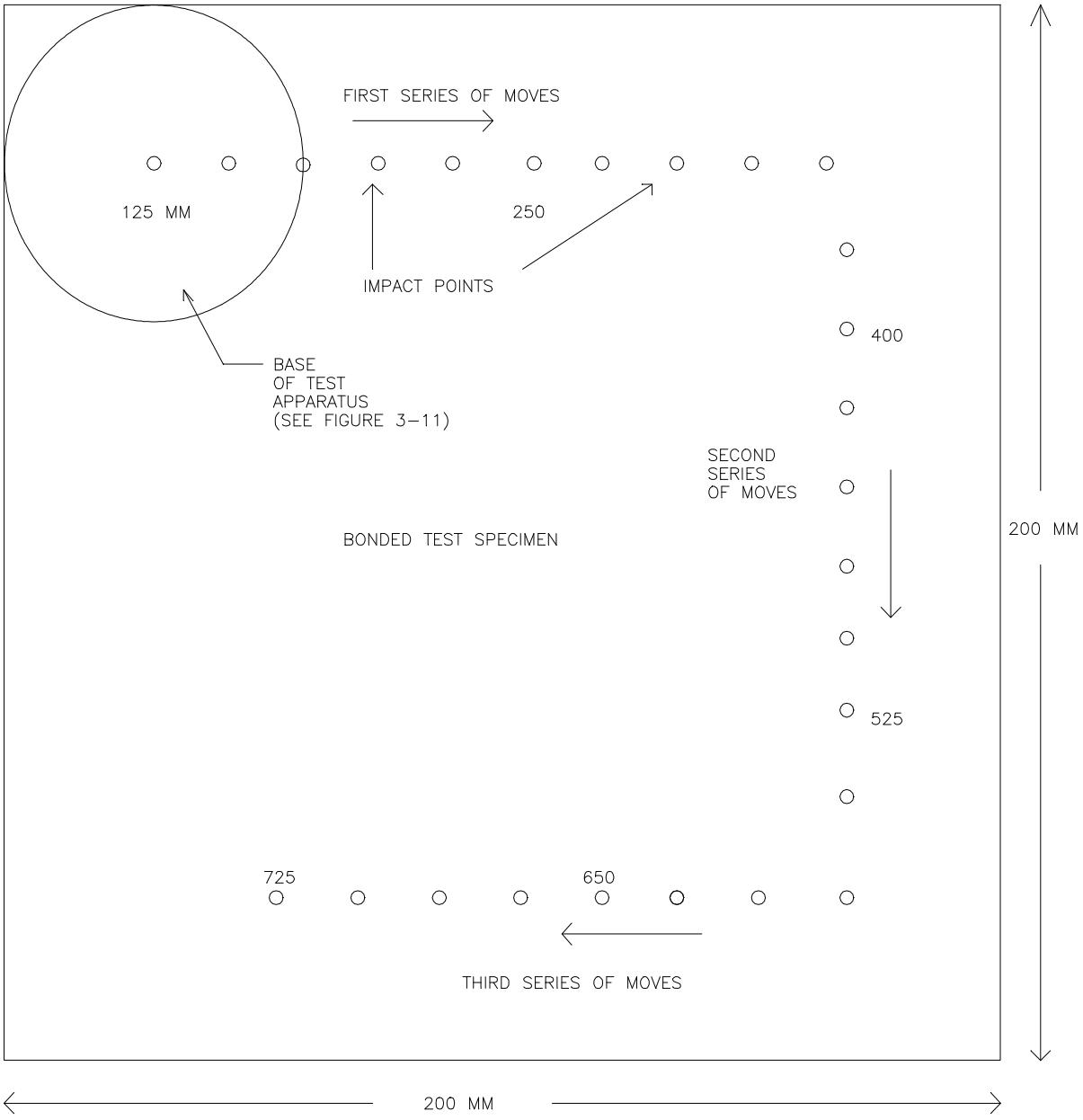

Figure 3-12
PROCEDURE CLARIFICATION FOR DART IMPACT RESISTANCE

c. The fall path of the dart should be precisely perpendicular to the specimen's surface.
d. Improperly conditioned test specimens can affect results drastically.

3.9.6 Test Report

The impact resistance value shall be reported in millimeters.

Copyright National Electrical Manufacturers Association
Provided by IHS under license with NEMA
No reproduction or networking permitted without license from IHS
Not for Resale

3.10 RADIANT HEAT RESISTANCE

3.10.1 Scope

This test measures the ability of the surface of high-pressure decorative laminate to resist damage when subjected to a radiant heat source.

3.10.2 Test Apparatus and Materials

The test apparatus and materials shall include:

a. Resistor heating element with silver soldered copper lead lugs as shown in Figure 3-13 and wired in accordance with Figure 3-14.
b. Draft excluding enclosure having:
    1. Approximate inside dimensions as follows:
        Width—330 mm (13 inches)
        Length—400 mm (16 inches)
        Height—250 mm (10 inches)
    2. Open bottom, or equally convenient arrangement.
    3. Means for visually inspecting the test specimen while it is under test.
c. Stop watch or other suitable timer.
d. Constant current heater control as shown in Figure 3-14.
e. Radiation calibration block in accordance with Figure 3-15.
f. A suitable temperature measuring device.
g. A spotlight directed on the test area to observe effects.
h. A candle to blacken the metal calibration disc.
i. A PVAc (white glue) adhesive utilized in accordance with the manufacturer's instructions.
j. Particle board that is 19 mm (3/4 inch) thick and 720 kg/m^3 (45 lb./ft^3) nominal density and sanded to thickness with 100 grit paper (International Paper Uniflake Industrial "AA" Vinyl Grade).

3.10.3 Test Specimens

The test specimen shall be 200 x 200 mm (8 x 8 inches) and shall be bonded to particle board utilizing a PVAc adhesive. Compact laminates shall be tested unbonded. Compact laminates less than or equal to 6 mm (0.236 inches) in thickness shall be supported with particle board as described in 3.10.2.j. Compact laminates greater than 6 mm (0.236 inches) in thickness require no support. The test specimens shall be conditioned for at least 48 hours prior to the test at a temperature of $23^o \pm 2^oC$ ($73.4^o \pm 3.6^oF$) and a relative humidity of 50 ± 5 percent.

3.10.4 Calibration

a. Place the heating element on the calibration block, making certain that the unit is located against the guides and is flat against the top of the calibration block. This will locate the heating element directly over the metal disc.
b. Adjust the height of the heating element so that the distance between the disc and the resistance coil is 7.95 ± 0.08 mm (0.313 ± 0.003 inch).
c. Remove the heating element from the calibration block for a preliminary heating period. Adjust the current input to the heating element to approximately 3.5 amperes and allow the element to heat for 15 minutes.

Copyright National Electrical Manufacturers Association
Provided by IHS under license with NEMA
No reproduction or networking permitted without license from IHS
Not for Resale

Bill of Materials				
Item	**Material**	**Name**	**Dimensions**	**Number Required**
1	NEMA Grade G-5	Cap	Diameter – 25.4 mm (1 in.); Length – 25.4 mm (1 in.)	1
2	NEMA Grade G-5	Mounting Plate	6.35 mm (1/4 in.) diameter x 50.8 mm (2 in.) x 127 mm (5 in.)	1
3	NEMA Grade G-5	Mounting Plate	25.4 x 50.8 x 76.2 mm (1 x 2 x 3 in.)	1
4	...	Heater Element	...	1
5	Copper	Mesh Wire	Length – about 101.6 mm (4 in.)	2
6	Brass	Sleeve	Outside Diameter – 19 mm (3/4 in.); Length – 31.75 mm (1/4 in.)	1
7	Brass	Nut	Outside Diameter – 25.4 mm (1 in.); Thickness – 4.76 mm (3/16 in.)	1
8	Metal	Screw	10-32 x 19 mm (3/4 in.) long	4
9	Copper	Lead Lug	...	1
10	Copper	Lead Lug	...	1

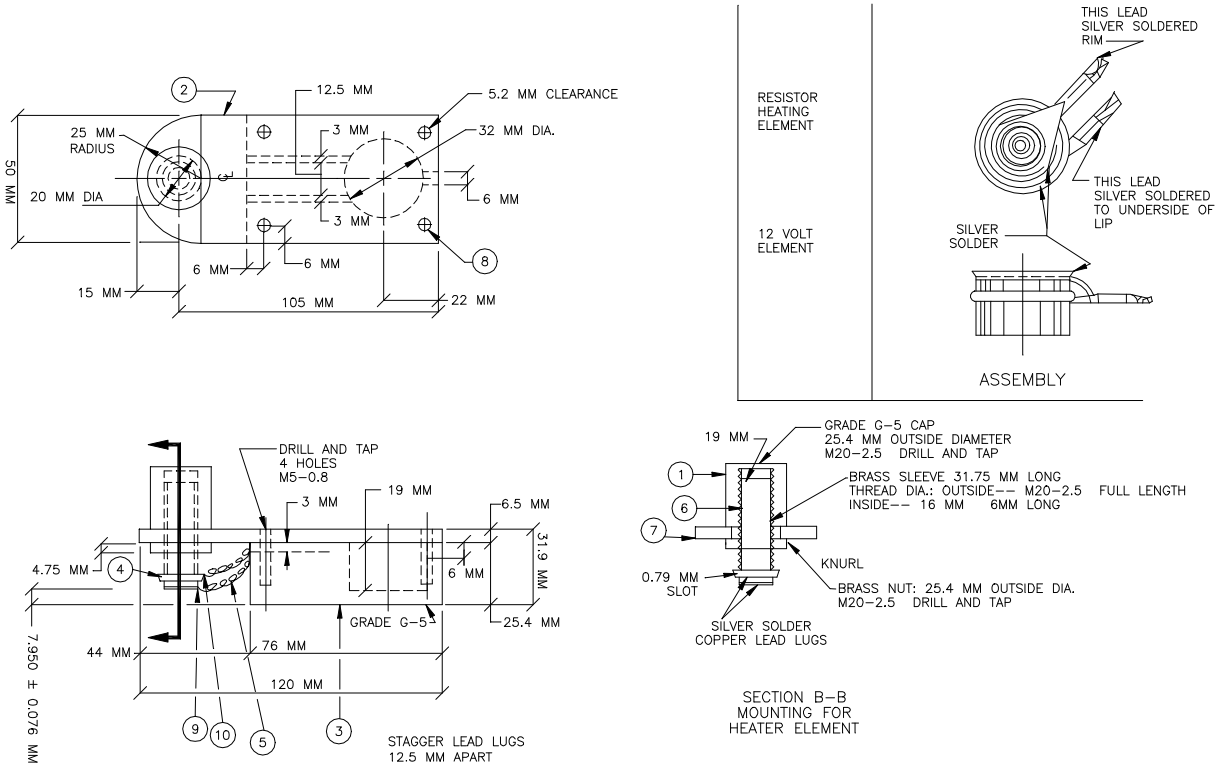

Figure 3-13
CONSTRUCTION OF RESISTOR HEATING ELEMENT ASSEMBLY

d. Blacken the metal disc with the carbon from the flame of the candle which is mounted vertically and shielded from all drafts. Hold the calibration block so that the disc is halfway down in the bright yellow portion of the flame. Avoid the lower or darker portion of the flame as it consists of, partially unburned wax, which produces an undesirable waxy carbon deposit. Allow the carbon to deposit on the disc for 30 seconds and then remove the calibration block from the flame.

e. Replace the heating element over the blackened disc and cover the assembly to prevent cooling from drafts. Allow 15 minutes for the calibration disc to heat up with no temperature being determined. Adjust the current input as necessary so that the final observed temperature is between 289º and 294ºC (552.2º and 561.2ºF).

f. After the necessary adjustments are made, proceed with the test in accordance with 3.10.5.

--`,,`,,`,`,,`,,`---

Copyright National Electrical Manufacturers Association
Provided by IHS under license with NEMA
No reproduction or networking permitted without license from IHS
Not for Resale

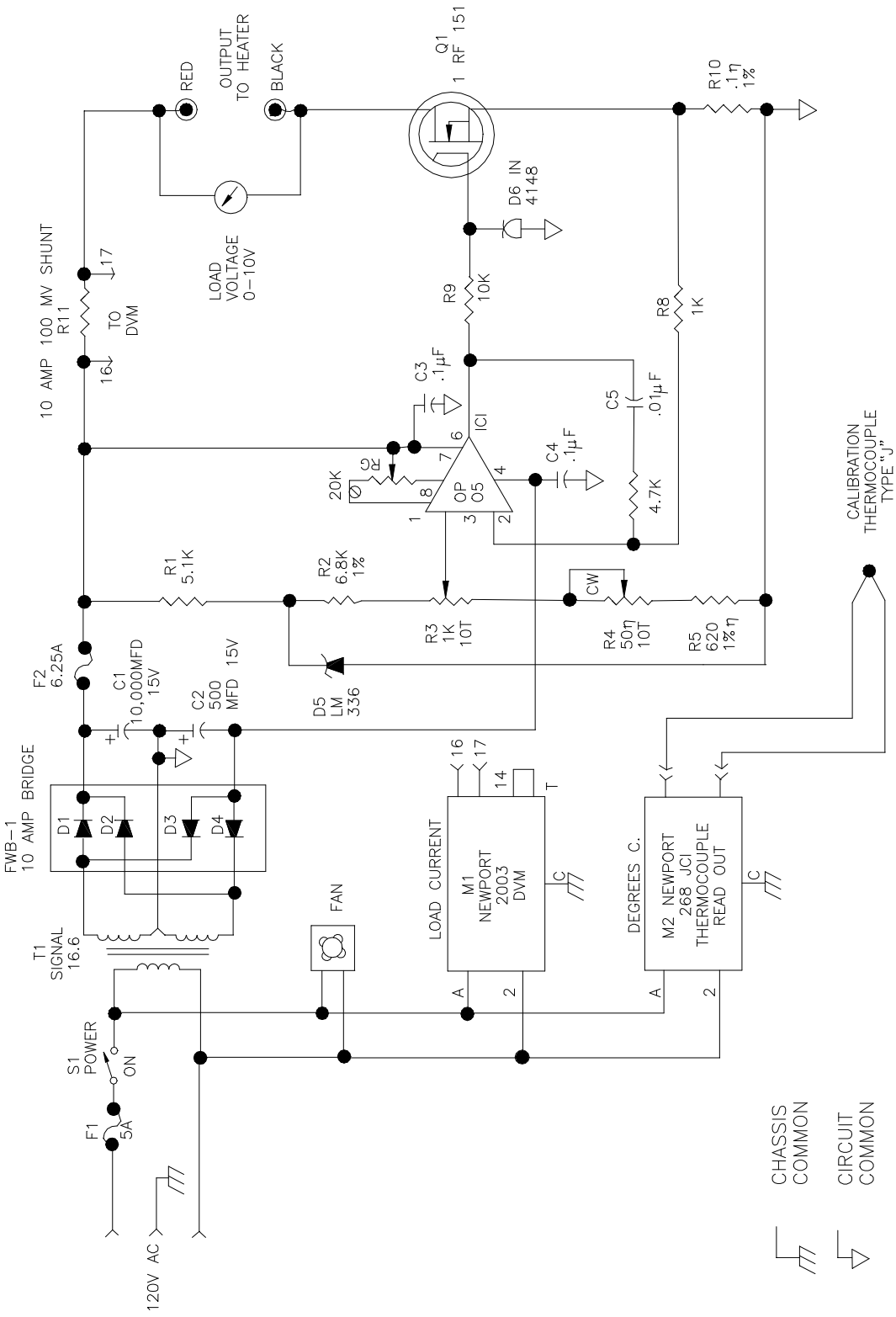

Figure 3-14
SCHEMATIC DIAGRAM FOR RADIANT HEAT TEST

Copyright National Electrical Manufacturers Association
Provided by IHS under license with NEMA
No reproduction or networking permitted without license from IHS
Not for Resale

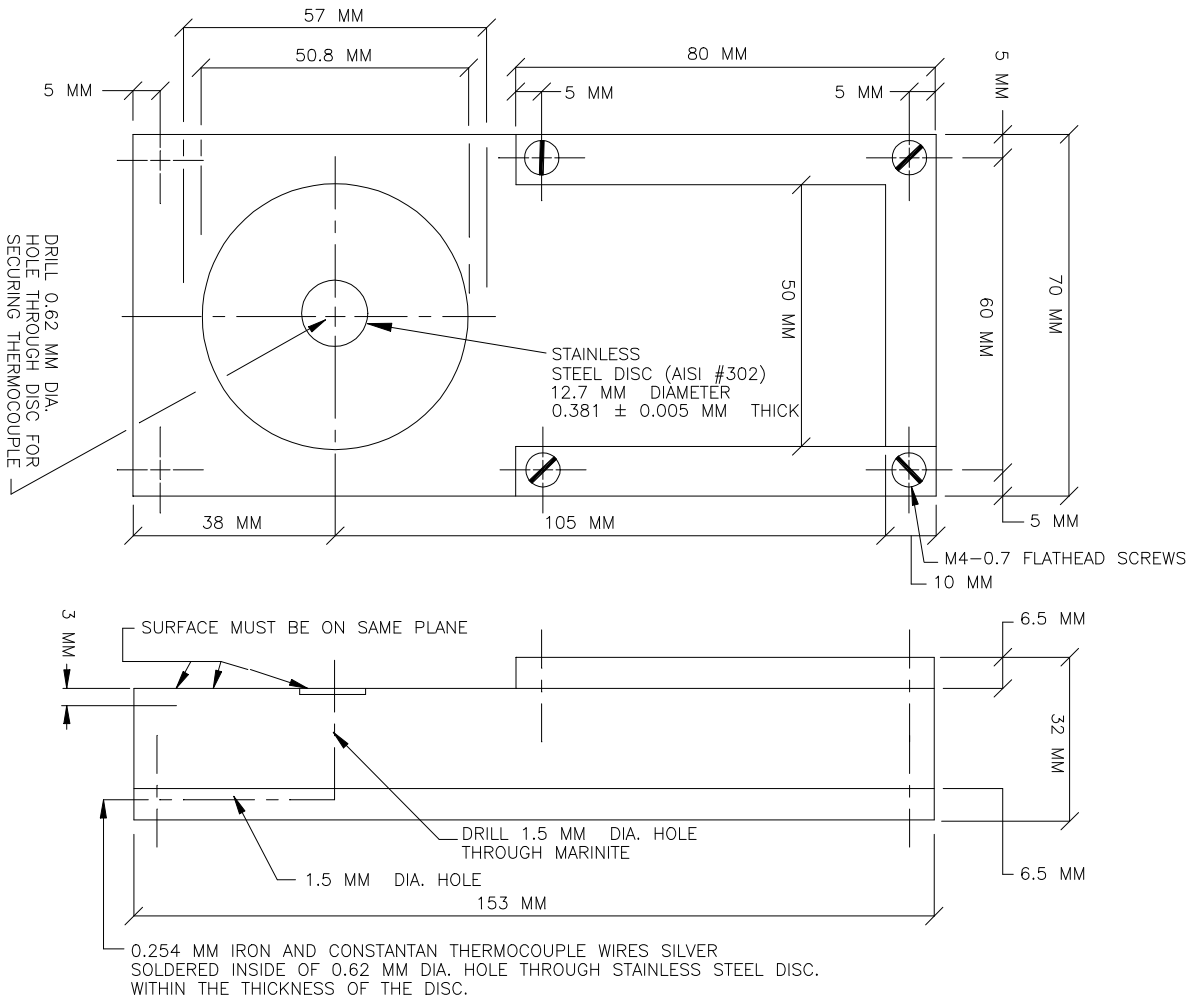

Figure 3-15
RADIATION CALIBRATION BLOCK

NOTES

1 The main body of the block should be constructed of NEMA Grade G-5 or G-9 laminated material as designated in LI 1-1998.

2 The thermocouple wires are first silver-soldered from the front surface of the 0.581 mm (0.015 inch) thick stainless steel disc and the inside of the 0.0610 mm (0.024 inch) hole with a minimum of silver solder to effect good contact. The wires should be No. 30 B & S gauge (0.254 mm) iron and constantan, insulated with glass fiber. The front surface, of the disc should be polished by first removing the excess length of thermocouple wires, sanding to produce a smooth surface, and then polishing with a crocus cloth.

3 The portion of the block immediately surrounding the disc should be a low density heat resistant insulating material having a density of approximately 577 kg/m^3 (36 lbs./ft^3) and sanded on both surfaces. This insulating material should be coated with linseed oil primer.

3.10.5 Test Procedure

a. Position the heater on the test specimen so that the resistance coil is at least 38 mm (1-1/2 inches) in from any edge, start the timer at this instant, cover the assembly with the enclosure within 2 seconds, and continue until the specimen fails or for 600 seconds.

Copyright National Electrical Manufacturers Association
Provided by IHS under license with NEMA
No reproduction or networking permitted without license from IHS
Not for Resale

b. The second test shall be made at a location at least 100 mm (4 inches) from the first test, and the third test shall be made at a location of at least 100 mm (4 inches) from both previous tests. The heater block shall not rest on an area of the test specimen that has been previously subjected to the test.

3.10.6 Factors Influencing the Accuracy of the Test

Four important factors which affect the accuracy of the test are:

a. Accuracy of the distance between the calibration disc and resistance coil of 7.95 ± 0.08 mm (0.313 ± 0.003 inch).
b. Accuracy of the distance between the surface of the test specimen and the resistance coil. Their planes should be parallel and 7.95 ± 0.08 mm (0.313 ± 0.003 inch) apart.
c. Effects of drafts during calibration or during test. The heater element, calibration block, and test specimen should be shielded on top and all four sides during calibration and test.
d. Temperature of the test specimen.

3.10.7 Test Report

The radiant heat resistance shall be reported as the average time of failure in seconds of the three tests on any one specimen. Failure is evidenced by blistering, charring, permanent discoloration, or crazing. If the failure does not occur, report the result as 600 seconds plus.

3.11 DIMENSIONAL CHANGE

3.11.1 Scope

This test measures the dimensional changes of high-pressure decorative laminate over an extreme range of temperature and relative humidity.

3.11.2 Test Apparatus and Materials

The test apparatus and materials shall include:

a. Circulating air oven capable of maintaining a temperature of $70^{o} \pm 2^{o}C$ ($158^{o} \pm 3.6^{o}F$).
b. Humidity chamber capable of maintaining a relative humidity of 90 ± 3 percent at a temperature of $40^{o} \pm 2^{o}C$ ($104.0^{o} \pm 3.6^{o}F$).
c. Caliper with a total measuring range of 150 to 200 mm (6 to 8 inches). The resolution shall be 0.01 mm (0.0005 in.) minimum with an accuracy of 0.03 mm (0.001 in.). Centering points are recommended but not required.
d. Pin prick.
e. Hammer.
f. Ruler.
g. Fixture to maintain specimens that are less than or equal to 1.2 mm thickness in a flat position while measurements are obtained as outlined in Figure 3-16.
h. Clean, soft, white cloth.

3.11.3 Test Specimens

a. Six specimens shall constitute a set.

Copyright National Electrical Manufacturers Association
Provided by IHS under license with NEMA
No reproduction or networking permitted without license from IHS
Not for Resale

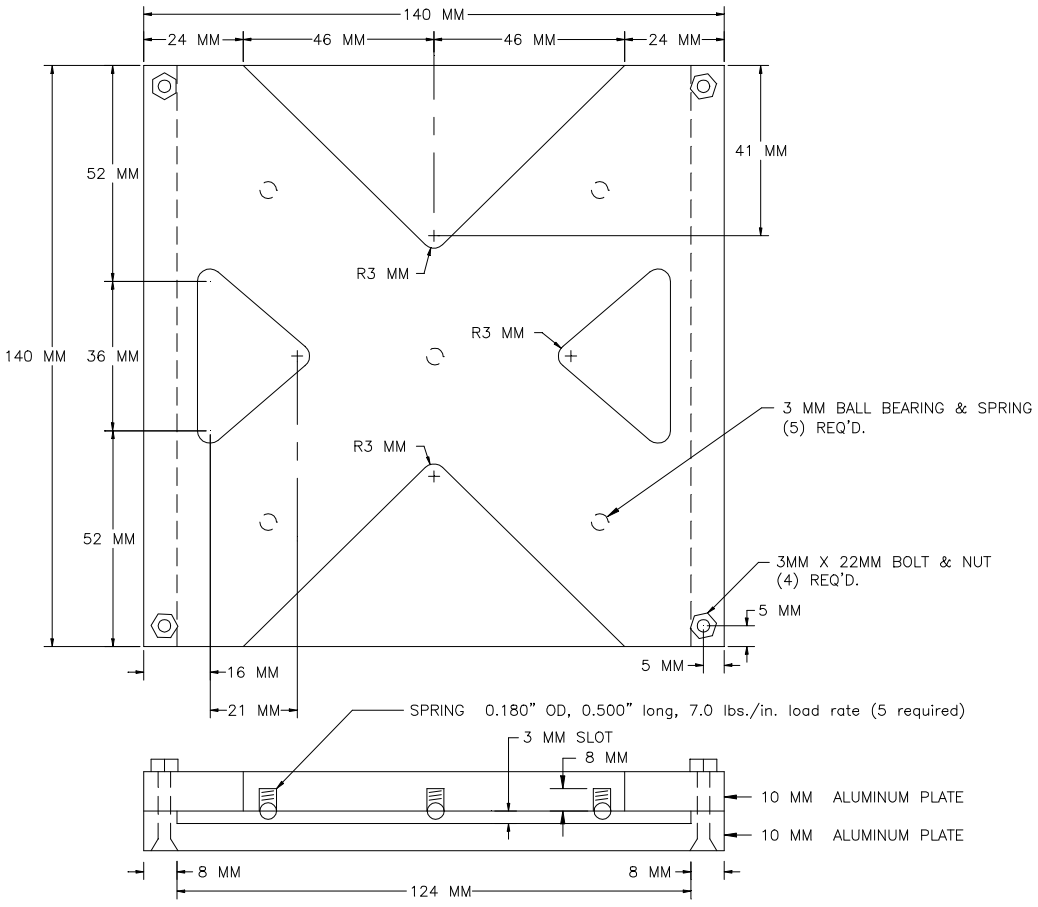

Figure 3-16
DIMENSIONAL CHANGE AND STABILITY FIXTURE

b. Each specimen shall be 120 mm x 120 mm (4-3/4 x 4-3/4 inch) x thickness.

c. Test specimens shall be cut in such a way as to have smooth edges and be free from nicks, chips, or cracks.

d. The test specimens shall be conditioned for at least 48 hours prior to the test at a temperature of $23^{o} \pm 2^{o}C$ ($73.4^{o} \pm 3.6^{o}F$) and a relative humidity of 50 ± 5 percent.

3.11.4 Test Procedure

a. Using the ruler, locate the point at midpoint between two adjacent corners and 10 mm (13/32 inch) in from the edge. Mark this location with the hammer and pin prick. Repeat this for the other three sides of that specimen and for the four sides of the other five specimens. See Figure 3-17 for detail.

b. Obtain MD and CD measurements across the center of each specimen by placing the points of the caliper in opposing pin prick locations. Utilize the fixture in Figure 3-16 for specimens less than or equal to 1.2 mm in thickness to hold the specimens flat while taking measurements. These measurements shall be accomplished within three minutes after removal from the conditioning chamber. These measurements shall be recorded as the initial measurements.

c. Preheat the oven to $70^{o} \pm 2^{o}C$ ($158^{o} \pm 3.6^{o}F$) and place three of the specimens in it for 24 hours.

Copyright National Electrical Manufacturers Association
Provided by IHS under license with NEMA
No reproduction or networking permitted without license from IHS
Not for Resale

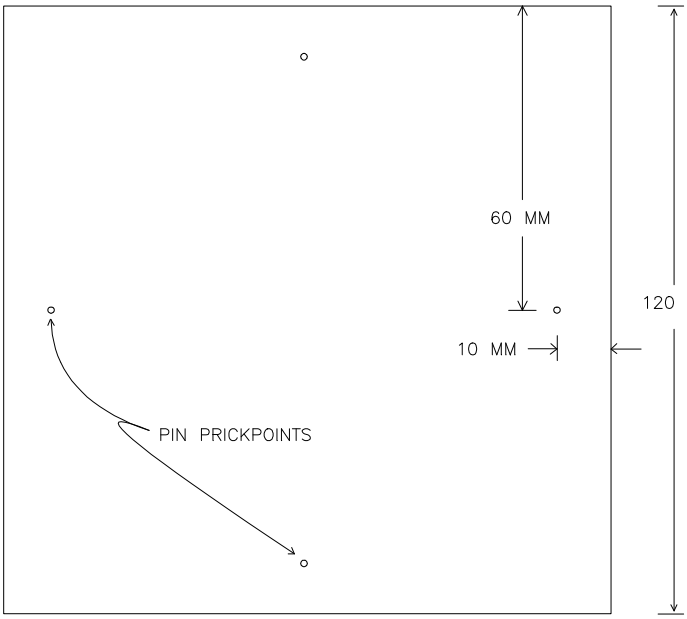

Figure 3-17
DIMENSIONAL STABILITY TEST SPECIMEN

d. At the end of 24 hours, remove the test specimens from the oven and cool them in a desiccator for 1 hour.

e. Obtain MD and CD measurements across the center of each specimen by placing the points of the caliper in opposing pin prick locations. Utilize the fixture in Figure 3-16 for specimens less than or equal to 1.2 mm in thickness to hold the specimens flat while taking measurements. These measurements shall be accomplished within three minutes after removal from the conditioning chamber. Record these as the final dry heat measurements.

f. Preset the high humidity chamber for 90 ± 3 percent relative humidity at $40^{o} \pm 2^{o}C$ ($104.0^{o} \pm 3.6^{o}F$) and place the other three specimens in it for 7 days.

g. At the end of 7 days, remove the test specimens from the chamber and wipe them free of surface water with a clean, soft, white cloth.

h. Within 1 minute after their removal from the chamber, insert each specimen one at a time into the fixture and obtain MD and CD measurements across the center of each specimen by placing the points of the caliper in opposing pin prick locations. Record these as the final high humidity measurements.

3.11.5 Calculation

Calculate the change as a percentage of the initial length. Calculate the mean percentage change for each of the two sets of three specimens to the nearest 0.05%. Calculate the cumulative dimensional change for each direction of the sheet. It is the sum of the absolute value for the average dimensional changes in each of the dry heat and high humidity tests if the movements are in opposite directions. If they are in the same direction, the larger of the two average changes shall be taken as the cumulative dimensional change. The absolute figure shall be reported.

Copyright National Electrical Manufacturers Association
Provided by IHS under license with NEMA
No reproduction or networking permitted without license from IHS
Not for Resale

Example (using specimens in MD direction):

Dry Heat Test				
Specimen	**1**	**2**	**3**	**Mean**
Initial Distance (mm)	100.28	99.89	99.95	
Final Distance (mm)	99.83	99.52	99.55	
Change (mm)	-0.45	-0.37	-0.40	
Change (%)	-0.45	-0.37	-0.40	-0.41
-0.41% rounded to nearest 0.05%				-0.40%

High Humidity Test				
Specimen	**1**	**2**	**3**	**Mean**
Initial Distance (mm)	100.11	99.74	99.21	
Final Distance (mm)	100.63	100.49	99.92	
Change (mm)	+ 0.52	+ 0.75	+ 0.71	
Change (%)	+ 0.52	+ 0.75	+ 0.72	0.66
0.66% rounded to nearest 0.05%				0.65%

The movements in the two tests are in opposite directions. Therefore, the cumulative dimensional change is equal to (0.40% + 0.65% = 1.05%).

3.11.6 Test Report

The test report shall include the following:

a. Cumulative dimensional change in the machine direction in expressed as a percentage (average of three specimens at each condition)

b. Cumulative dimensional change in the cross-machine direction expressed as a percentage (average of three specimens at each condition)

3.12 ROOM TEMPERATURE DIMENSIONAL STABILITY

3.12.1 Scope

This test measures the dimensional stability of high-pressure decorative laminate over an extreme range of relative humidities at room temperature.

3.12.2 Test Apparatus and Materials

The test apparatus shall include:

a. High humidity chamber capable of maintaining a temperature of $23^{o} \pm 2^{o}C$ ($73.4^{o} \pm 3.6^{o}F$) and a relative humidity of 90% ± 3%

b. Low humidity chamber capable of maintaining a temperature of $23^{o} \pm 2^{o}C$ ($73.4^{o} \pm 3.6^{o}F$) and a relative humidity of 15 ± 5%

   The low humidity chamber may be set up to operate either completely mechanically or chemically to control the dry bulb temperature to $23^{o} \pm 2^{o}$ C ($73.4^{o} \pm 3.6^{o}$ F) and maintain 15% ± 5% relative humidity by maintaining a saturated solution of Lithium Chloride ($LiCl \cdot H_2O$) in water placed in a tray within the chamber area.

c. Caliper with a total measuring range of 150 to 200 mm (6 to 8 inches). The resolution shall be 0.01 mm (0.0005 inches) minimum with an accuracy of 0.03 mm (0.001 inches). Centering points are recommended but not required.

d. Pin prick

e. Hammer

f. Ruler

Copyright National Electrical Manufacturers Association
Provided by IHS under license with NEMA
No reproduction or networking permitted without license from IHS
Not for Resale

g. Fixture to maintain specimens that are less than or equal to 1.2 mm thickness in a flat position while measurements are obtained as outlined in Figure 3-16

3.12.3 Test Specimens

a. Three specimens shall constitute a set.

b. Each specimen shall measure 120 mm x 120 mm (4-3/4 x 4-3/4 inch) x thickness.

c. Test specimens shall be cut in a way as to have smooth edges and be free from nicks, chips, or cracks.

3.12.4 Test Procedure

a. Using the ruler, locate at midpoint between two adjacent corners and 10 mm (13/32 inch) in from the edge. Mark this location with the hammer and pin prick. Repeat this for the other three sides of that specimen and for the four sides of the other two specimens. See Figure 3-17 for detail.

b. Place the specimen set in the high humidity chamber and maintain a temperature of 23°C ± 2°C (73.4°F ± 3.6°F) and a relative humidity of 90% ± 3% for a period of 96 hours. Specimens shall be positioned so that air can circulate freely around the samples.

c. At the end of 96 hours, remove the specimen from the chamber. Obtain MD and CD measurements across the center of each specimen by placing the points of the caliper in opposing pin prick locations. Utilize the fixture in Figure 3-16 for specimens less than or equal to 1.2 mm in thickness to hold the specimens flat while taking measurements. These measurements shall be accomplished within three minutes after removal from the chamber and shall be recorded as the initial measurements.

d. Immediately place the specimen set into the low humidity chamber and maintain a temperature of 23°C ± 2°C (73.4°F ± 3.6°F) and a relative humidity of 15% ± 5% for a period of 96 hours. Specimens shall be positioned so that air can circulate freely around the samples.

e. At the end of 96 hours, remove the specimen from the chamber. Obtain MD and CD measurements across the center of each specimen by placing the points of the caliper in opposing pin prick locations. Utilize the fixture in Figure 3-16 for specimens less than or equal to 1.2 mm in thickness to hold the specimens flat while taking measurements. These measurements shall be accomplished within three minutes after removal from the chamber and shall be recorded as the final measurements.

3.12.5 Calculation

The gross dimensional change is defined as the algebraic difference of the dimensional changes between the average initial and average final measurements.

The percentage of dimensional change is expressed as a positive or negative percentage and calculated by the gross dimensional change divided by the average initial measurement multiplied by 100.

Example (using specimens in MD direction):

Average of 3 initial measurements =	104.02 mm
Average of 3 final measurements =	103.05 mm
Gross dimensional change =	0.97 mm
(0.97 mm/104.02 mm) x 100 =	0.93%
Percentage of dimensional change =	0.93%

3.12.6 Test Report

The test report shall include the following:

a. Test method.

b. Percentage of dimensional change in the machine direction.

Copyright National Electrical Manufacturers Association
Provided by IHS under license with NEMA
No reproduction or networking permitted without license from IHS
Not for Resale

c. Percentage of dimensional change in the cross-machine direction.
d. Any exceptions to the method utilized during testing.

3.13 WEAR RESISTANCE

3.13.1 Scope

This test measures the ability of the surface of high-pressure decorative laminate to resist abrasive wear-through of the decorative layer.

3.13.2 Test Apparatus and Materials

The test apparatus and materials shall include:

a. Abrading machine (Teledyne Taber Inc. Catalog No. 5130 or equivalent).
b. Two sets of NEMA Wheels (Teledyne Taber Inc. Catalog No. S-32, or equivalent).
c. Supply of zinc plates (Teledyne Taber Inc. Catalog No. S-34, or equivalent) which are 0.787 mm (0.031 inch) rolled zinc sheet.
d. Sandpaper strips 12.7 mm (1/2 inch) wide in the machine direction by 160 mm (6 1/4 inch), 180 grit aluminum oxide, open coat, light weight finishing paper, glue bon.
e. Double-faced adhesive paper tape 12.7 mm (1/2 inch) wide.
f. Analytical balance and weights capable of weighing to the nearest 1 milligram.
g. Isopropyl alcohol.
h. Powdered zinc stearate or talc.
i. Clean, soft, white cloth.
j. Annex D – NEMA Wear Resistance Chart.

3.13.3 Test Specimens

The test specimens shall be of the nominal thickness of the material to be tested and shall be either squares with rounded corners or circular discs. Each specimen shall have a minimum cross-dimension of 103 mm (4-1/16 inches) with a 7 mm (1/4 inch) diameter hole in the center. A minimum of three specimens shall be tested. All specimens shall be conditioned for at least 48 hours prior to the test at a temperature of $23^{o} \pm 2^{o}$C ($73.4^{o} \pm 3.6^{o}$F) and a relative humidity of 50 ± 5 percent.

3.13.4 Preparation of Test Wheels

The test wheels supplied with the abrading machine shall be ready for use in the test except for the application of the sandpaper.

Apply a light dusting of zinc stearate or talc to the rubber rim of the test wheels. Apply the 12.7 mm (1/2 inch) wide strips of double-faced tape and sandpaper to the periphery of each wheel. Butt join them carefully and avoid contaminating the face of the sandpaper. The outside diameter of the finished wheel shall be 50.9 ± 0.65 mm (2.004 ± 0.026 inches).

3.13.5 Preparation of Test Apparatus

a. The sandpaper strips shall be conditioned and stored at $23^{o} \pm 2^{o}$C ($73.4^{o} \pm 3.6^{o}$F) and a relative humidity of 50 ± 5 percent. They shall be maintained in this environment for at least 48 hours prior to use.
b. Set up the abrading machine with the 500 gram plugs in place.
c. Place the test wheels on the arbor and fasten them in position.
d. Connect the vacuum source.

Copyright National Electrical Manufacturers Association
Provided by IHS under license with NEMA
No reproduction or networking permitted without license from IHS
Not for Resale

3.13.6 Standardization of Abrasive

a. Make up test wheels for each lot of sandpaper received.

b. Using fresh sandpaper, place the abrader wheels on the surface of the zinc plate, turn on the vacuum, and allow the turntable to make 500 revolutions. Wipe the zinc plate clean with 70% isopropyl alcohol and allow it to dry. Weigh it to the nearest milligram (W_1) and then return it to the turntable.

c. Using fresh sandpaper, place the abrader wheels on the surface of the zinc plate, turn on the vacuum, and allow the turntable to make 500 revolutions. Remove the zinc plate. Wipe the zinc plate clean with 70% isopropyl alcohol and allow it to dry. Reweigh it to the nearest milligram (W_2). The weight loss of the zinc plate shall be 110 ± 30 milligrams.

d. Use fresh sandpaper and repeat step c to obtain W_3.

e. If the weight loss, either (W_1 - W_2) or (W_2 - W_3), is out of the specified range, disregard those values and repeat the standardization of abrasive using fresh sandpaper from the same lot. If the weight loss of the second standardization is also out of the specified range, reject that lot of sandpaper.

f. A correction factor for each lot of sandpaper is calculated as follows:

$$\text{Correction Factor} = \frac{(W_1 - W_2) + (W_2 - W_3)}{2 \times 110}$$

3.13.7 Test Procedure

a. Clean the surface of the test specimen with 70% isopropyl alcohol and allow it to dry. Weigh the specimen to the nearest milligram (W_1) if the rate of wear value is desired.

b. Apply fresh sandpaper to the abrader wheels. Fasten the test specimen to the turntable of the machine and start the abrader.

c. Inspect the specimen every 25 revolutions until the initial wear point (IP) is reached. Record the number of revolutions.

   The initial wear point (see Annex E) is defined as follows:

   1. Printed patterns—that point at which a clearly recognizable part of the print has been removed in 4 quadrants of the specimen, and the base paper is exposed.
   2. Solid colors—that point at which the color layer is first worn through in 4 quadrants, and the sublayer is exposed.
   3. Decorative inclusions in the overlay—that point at which the decorative inclusions are completely removed the full width of the abrading wheel around its entire path.

d. Restart the machine and run it until the final wear point (FP) is reached. Record the number of revolutions. Weigh the specimen to the nearest milligram (W_2) if the rate of wear value is desired.

   The final wear point (see Annex E) is defined as follows:

   1. Printed patterns—that point at which the printed pattern is completely removed, exposing the base paper the full width of the abrading wheel around its entire path.
   2. Solid colors—that point at which the color layer is completely removed, exposing the sublayer the full width of the abrading wheel around its entire path.
   3. Decorative inclusions in the overlay—that point at which the decorative inclusions are completely removed the full width of the abrading wheel around its entire path.

e. Replace the 12.7 mm (1/2 inch) sandpaper strips every 500 revolutions.

Copyright National Electrical Manufacturers Association
Provided by IHS under license with NEMA
No reproduction or networking permitted without license from IHS
Not for Resale

3.13.8 Calculation

a. The wear resistance is defined as the algebraic sum of the initial point average of the samples and the final point average of the samples, divided by 2 and multiplied by the correction factor (3.13.6.f).

Example:

Specimen	Initial Point	Final Point
1	600	750
2	575	725
3	625	775
Average	600	750

$$\text{Wear Resistance} = \frac{(600 + 750}{2} \text{ x } 0.90$$

$$\text{Wear Resistance} = \frac{1350}{2} \text{ x } 0.90$$

$$\text{Wear Resistance} = 675 \text{ x } 0.90$$

$$\text{Wear Resistance} = 607.5$$

607.5 rounded to the nearest 50 is 600

$$\text{Wear Resistance} = 600 \text{ cycles}$$

b. The rate of wear (grams/100 cycles) can be calculated as follows and reported for informational purposes:

$$\text{Rate of Wear} = \frac{W_1 - W_2}{\text{Revolutions at FP}} \text{x} 100$$

3.13.9 Factors Influencing the Accuracy of the Test

a. The abrader wheels should be periodically inspected for rounding of edges and replaced as necessary.
b. Specimens should be flat or clamped flat on the turntable to ensure total contact across the face of the abrader wheels.
c. Certain solid colors utilize a barrier which should be taken into account when determining the end points. This barrier is part of the sublayer and should be considered part of it if significantly different in color from the decorative surface and distinguishable from it.

3.13.10 Test Report

The wear resistance shall be reported as the average of 3 specimens rounded to the nearest 50 revolutions.

Copyright National Electrical Manufacturers Association
Provided by IHS under license with NEMA
No reproduction or networking permitted without license from IHS
Not for Resale

3.14 FORMABILITY

3.14.1 Scope

This test measures the ability of postforming high-pressure decorative laminate to be formed.

3.14.2 Test Apparatus and Materials

The test apparatus and materials shall include:

a. A two element radiant electric heater, 120 volts, 1600 watts, or equivalent, mounted in a suitable metal-lined trough. See Figure 3-18.

b. A variable output transformer.

c. Temperature indicator crayons rated 135° to 190°C (275° to 375°F) or an infrared thermometer.

d. A timer.

e. A machinist's micrometer.

f. A wind screen as shown in Figure 3-19, or equivalent.

g. Calibration strips of a solid white laminate (HGS type) 50 x 200 x 1.1 ± 0.05 mm (2 x 8 x 0.045 ± 0.002 inch) with the 200 mm (8 inch) dimension cut parallel with the machine direction of the laminate. The backs of the strips shall be sanded to obtain the specified thickness.

h. Radiused male forming blocks 13 mm (1/2 inch) and 16 mm (5/8 inch) and female forming blocks shall be machined from NEMA Grade C industrial laminate, hard maple, or similar close grained wood species. See Figure 3-20.

i. Forming apparatus. See Figures 3-21 through 3-23.

j. The parts of the test apparatus shall be located in a draft free area and in close proximity to permit rapid and smooth transfer of the test specimen from the heater to the forming block.

k. Overhead white fluorescent lights with bulb(s) positioned parallel to the line of sight and providing an intensity of 800 to 1100 lux (75 to 100 foot-candles) on the specimen surface.

3.14.3 Test Specimens

a. Test specimens shall be 50 x 200 mm (2 x 8 inches) x thickness, cut from the right edge, center, and left edge of the laminate. The edges of the specimens shall be sanded to remove minute cracks. Six specimens, three in the machine direction and three in the cross-machine direction, shall be tested.

b. Test specimens shall be conditioned for at least 48 hours prior to the test at a temperature of 23° ± 2°C (73.4° ± 3.6°F) and a relative humidity of 50 ± 5 percent.

3.14.4 Calibration

a. Turn on the heating element 30 minutes prior to making any test. A voltmeter shall be used to check the applied voltage. The starting point voltage shall be 91 to 100 percent of the line voltage, e.g., 100 to 110 volts.

b. Mark the sanded back of several calibration test strips with a single centered line parallel to the 200 mm (8 inch) dimension using a 163°C (325°F) temperature indicator crayon.

Copyright National Electrical Manufacturers Association
Provided by IHS under license with NEMA
No reproduction or networking permitted without license from IHS
Not for Resale

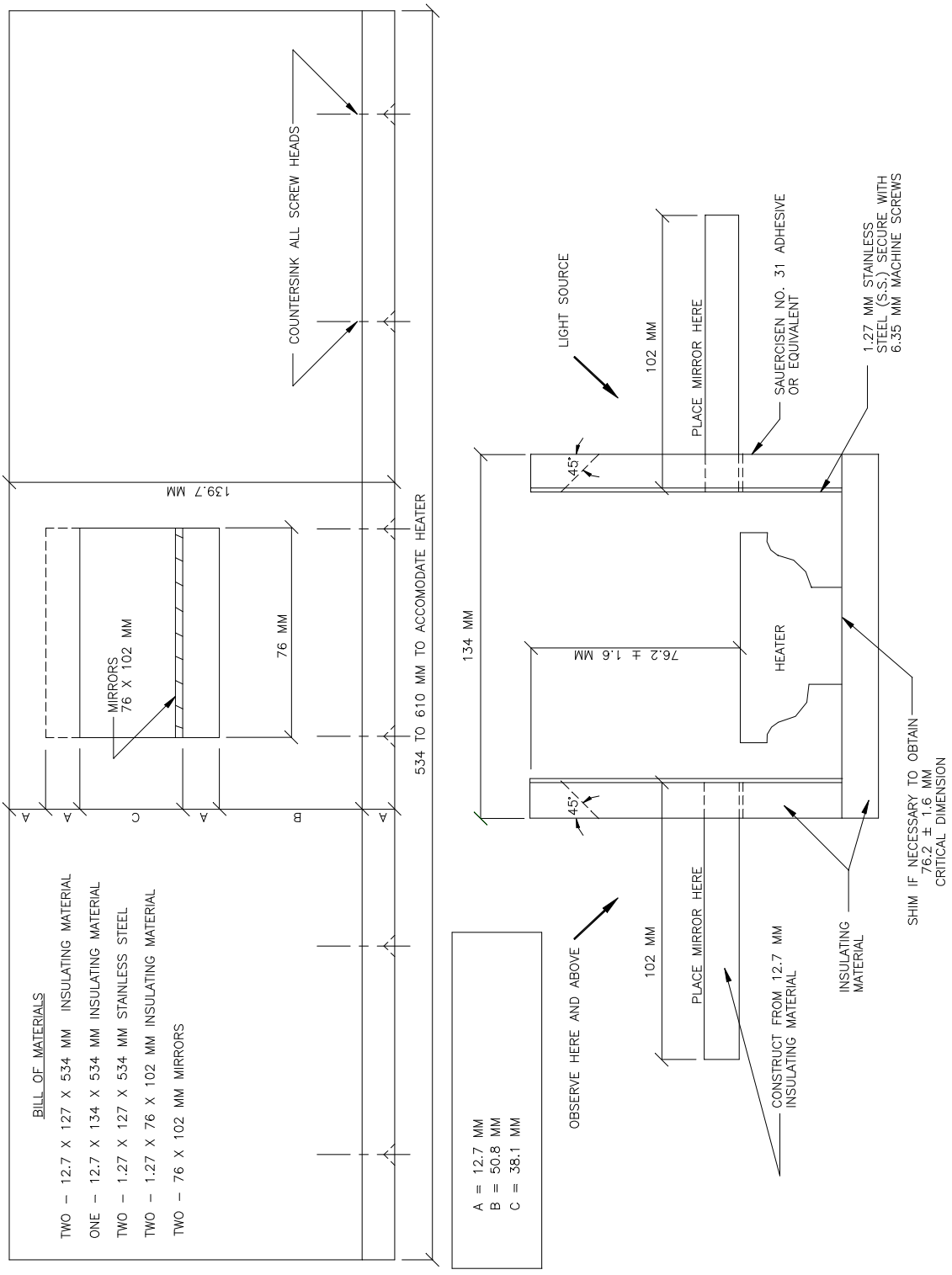

Figure 3-18
HEATING APPARATUS

Copyright National Electrical Manufacturers Association
Provided by IHS under license with NEMA
No reproduction or networking permitted without license from IHS
Not for Resale

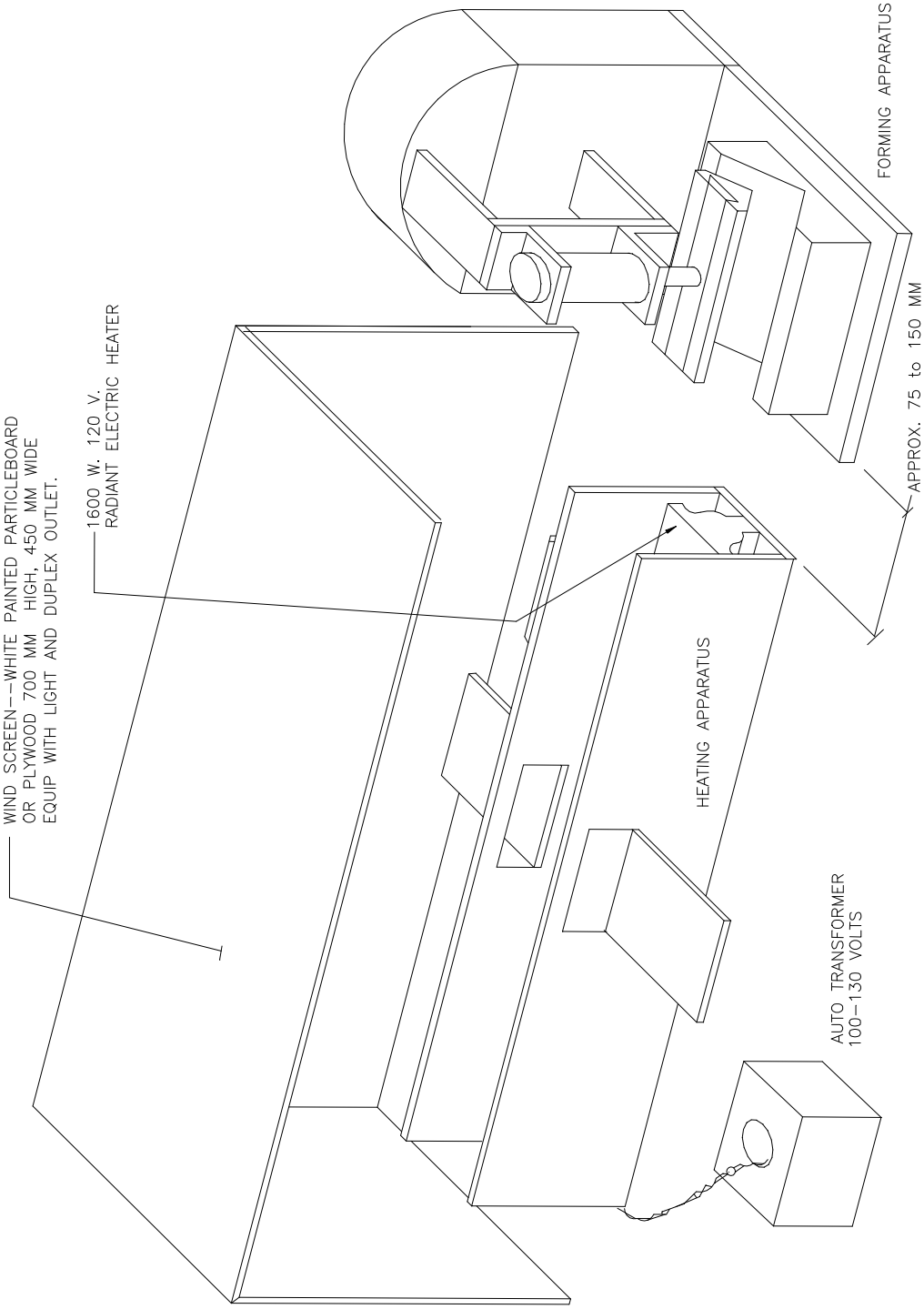

Figure 3-19
FORMABILITY AND BLISTER RESISTANCE APPARATUS

--`,,`-`-`,,`,,`,`,,`---

Copyright National Electrical Manufacturers Association
Provided by IHS under license with NEMA
No reproduction or networking permitted without license from IHS

Not for Resale

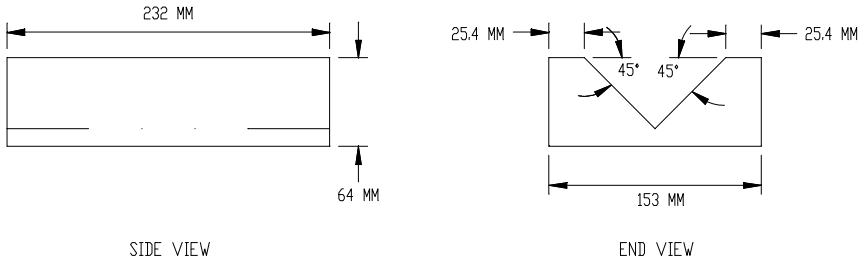

RECEPTACLE

MATERIAL: NEMA GRADE C PHENOLIC BLOCK
OR HARDWOOD SUCH AS OAK OR MAPLE

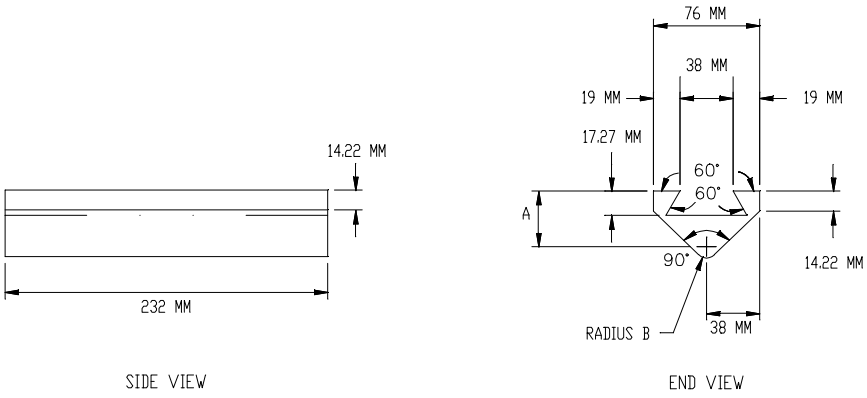

RAM WEDGE

MATERIAL: NEMA GRADE C PHENOLIC BLOCK
OR HARDWOOD SUCH AS OAK OR MAPLE

ONE SET CONTAINS ONE OF EACH	
DIMENSION A	RADIUS B
46.2 MM (1.82 IN)	3 MM ± 0.254 MM or 1/8 IN ± .010 IN
43.9 MM (1.73 IN)	5 MM ± 0.254 MM or 3/16 IN ± .010 IN
41.6 MM (1.64 IN)	6 MM ± 0.254 MM or 1/4 IN ± .010 IN
39.6 MM (1.56 IN)	8 MM ± 0.254 MM or 5/16 IN ± .010 IN
37.3 MM (1.47 IN)	10 MM ± 0.254 MM or 3/8 IN ± .010 IN
33.0 MM (1.30 IN)	13 MM ± 0.254 MM or 1/2 IN ± .010 IN
28.2 MM (1.11 IN)	16 MM ± 0.254 MM or 5/8 IN ± .010 IN

Figure 3-20
RADIUS FORMING BLOCKS

--`,,`-`-`,,`,,`,`,,`---

Copyright National Electrical Manufacturers Association
Provided by IHS under license with NEMA
No reproduction or networking permitted without license from IHS

Not for Resale

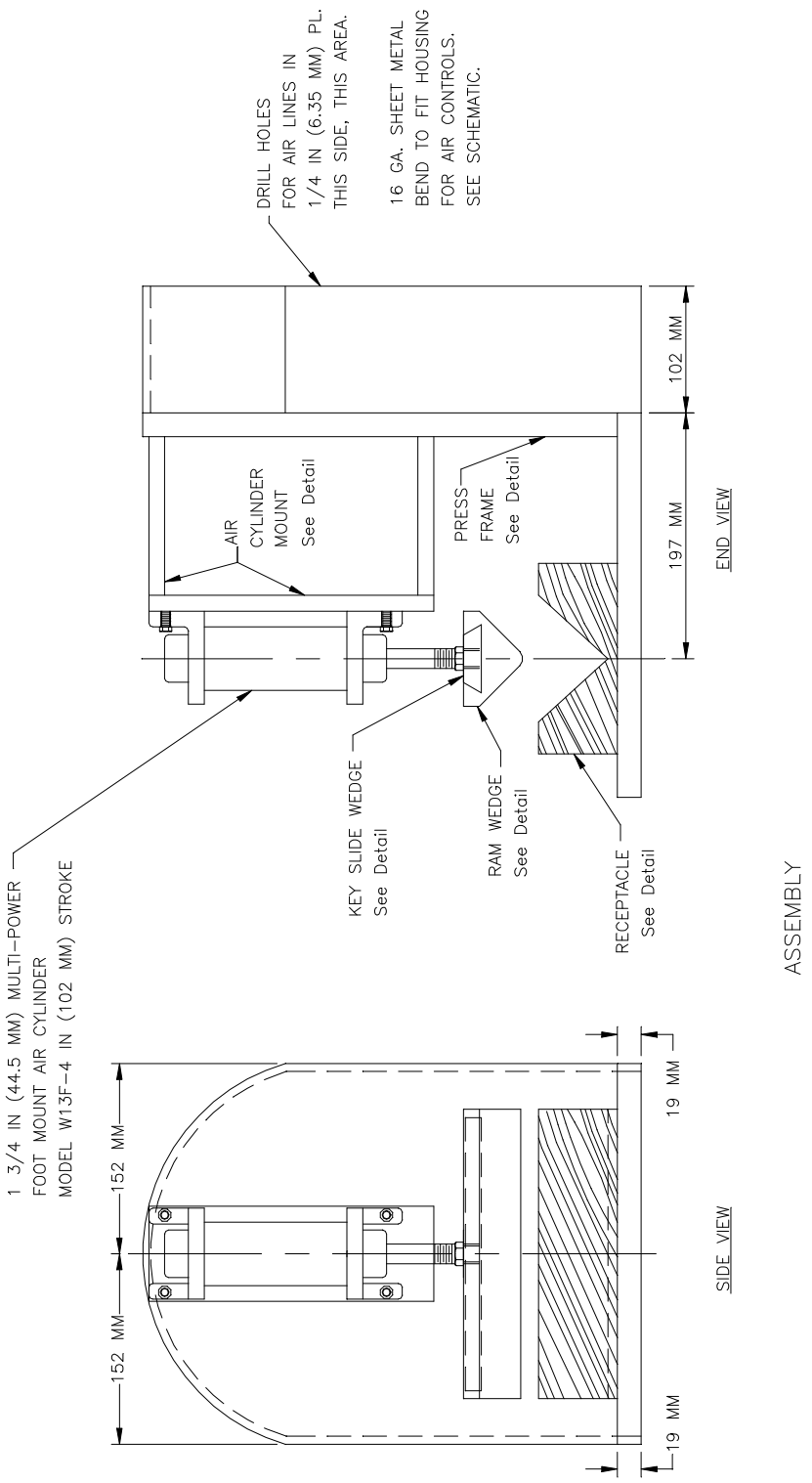

Figure 3-21
FORMABILITY APPARATUS

Copyright National Electrical Manufacturers Association
Provided by IHS under license with NEMA
No reproduction or networking permitted without license from IHS
Not for Resale

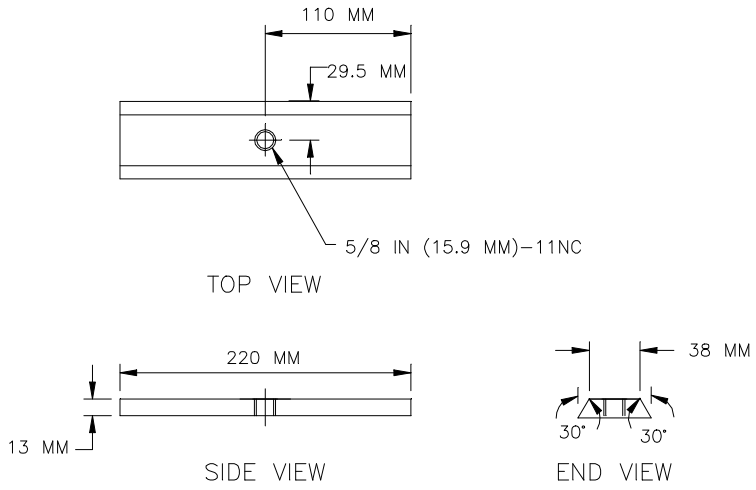

KEY SLIDE WEDGE

MATERIAL: 13 MM STEEL PLATE

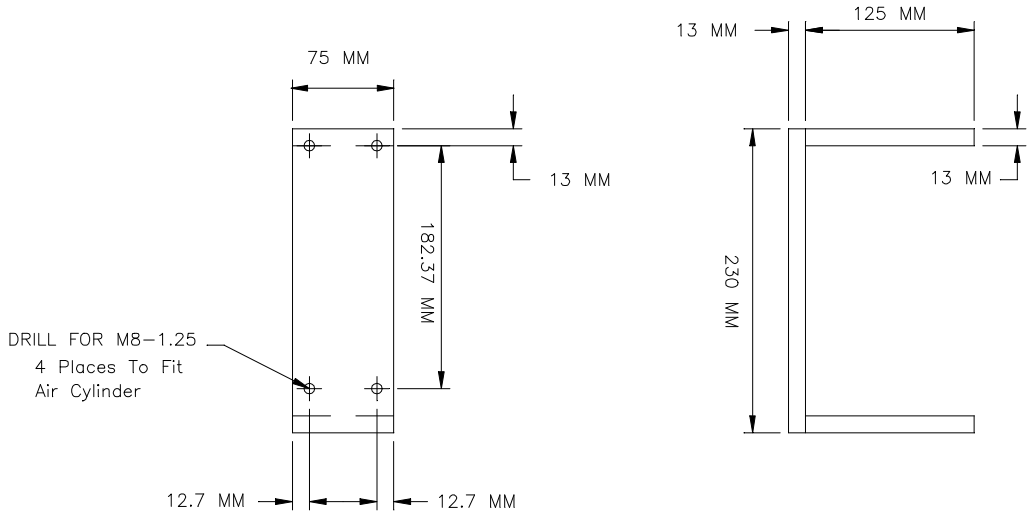

AIR CYLINDER MOUNT

MATERIAL: 13 MM STEEL PLATE

Figure 3-22
KEY SLIDE WEDGE AND AIR CYLINDER MOUNT

Copyright National Electrical Manufacturers Association
Provided by IHS under license with NEMA
No reproduction or networking permitted without license from IHS
Not for Resale

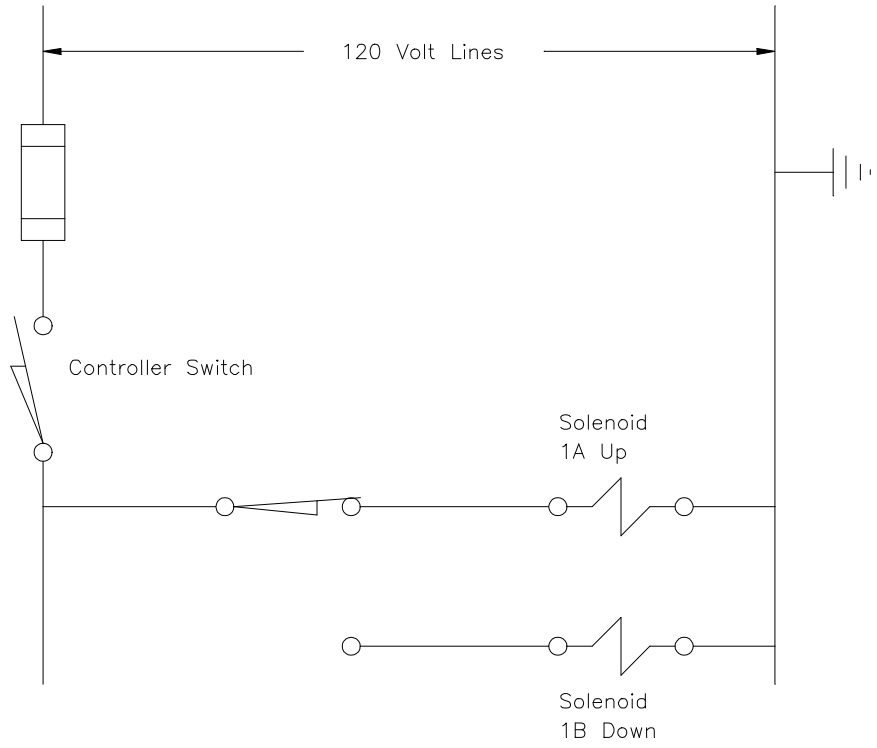

ELECTRICAL

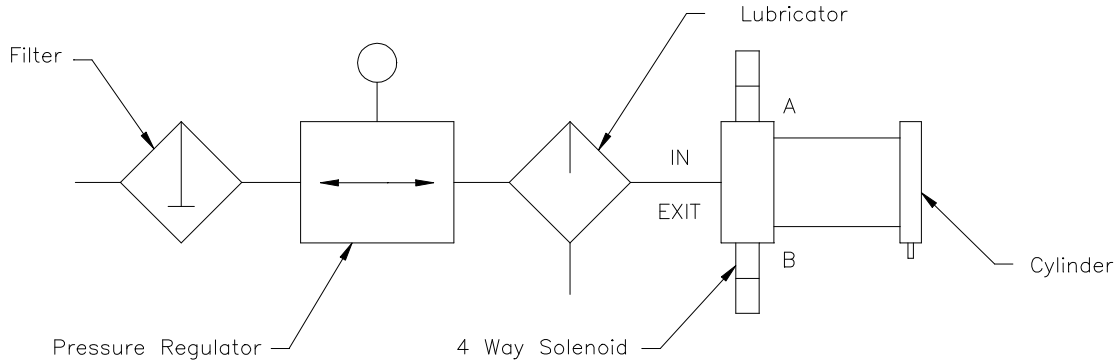

AIR

Figure 3-23
SCHEMATICS

Copyright National Electrical Manufacturers Association
Provided by IHS under license with NEMA
No reproduction or networking permitted without license from IHS
Not for Resale

3.14.4 Calibration (cont'd.)

c. Place a calibration strip on the heating apparatus at the center, decorative face down, centering the marked line over the heater element. Watch the temperature indicator crayon mark on the test specimen for signs of melting. When the mark initially melts, remove the specimen from the heating apparatus. Using the calibration strips, adjust the input voltage with the transformer so that the rate of temperature rise required to reach 163°C (325°F) will be 1 second per 0.025 mm (0.001 inch) of thickness. The total variance shall be ± 2 seconds.

d. When three or more consecutive test strips reach the prescribed temperature/time curve as described in step c, begin the test.

e. Adjust the air cylinder pressure to produce 558.7 ± 44.5 Newtons (125.6 ± 10.0 pounds) of force.

For 1.1 mm (0.045 inch) thick laminate, the time to reach 163°C (325°F) is 45 ± 2 seconds.

Commercially available infrared thermometers may be used in place of the temperature indicator crayons. When using the infrared thermometer, record the temperature for the initial melt during the calibration procedure. This temperature may be used as the set point. The calibration of the thermometers should be in accordance with the instrument manufacturer's instructions.

3.14.5 Test Procedure

a. Measure the thickness of the test specimen with the machinist's micrometer and record it.

b. Using the temperature indicator crayon, mark the back of each test specimen with a single centered line parallel to the 200 mm (8 inch) dimension. Use the temperature indicator crayon recommended by the laminate manufacturer. In the absence of a manufacturer's recommendation, use a 163°C (325°F) crayon.

c. Place the test specimen, decorative face down, on the heating apparatus, centering the marked line over the heater element.

d. Observe the temperature indicator crayon mark on the test specimen for signs of melting. When the mark initially melts, remove the specimen from the heating apparatus. Immediately place the specimen face down in the forming apparatus equipped with the proper radius forming block and form it.

e. Allow the formed specimen to cool in the closed forming apparatus at least 15 seconds. Remove and inspect the test specimen.

f. Record observations.

If an infrared thermometer is used instead of the temperature indicator crayon, the thermometer probe should be placed above the specimen to ensure that its beam target area is narrower than the width of the specimen. The manufacturer's instructions should be followed. The test sample should be removed from the heating apparatus when the calibration set point is reached and then proceed with the forming.

The closing time of the forming die after initial contact with the specimen should be approximately 1 second. The air cylinder exhaust valve may be adjusted to obtain the desired closing rate.

3.14.6 Test Report

Report that the specimens either "passed" or "failed."

a. "Passed" means that all of the test specimens formed to the prescribed minimum forming radius without cracking, blistering, crazing, or permanently discoloring.

b. "Failed" means that one or more of the test specimens did not form to the prescribed minimum forming radius without cracking, blistering, crazing, or permanently discoloring.

Copyright National Electrical Manufacturers Association
Provided by IHS under license with NEMA
No reproduction or networking permitted without license from IHS
Not for Resale

3.15 BLISTER RESISTANCE

3.15.1 Scope

This test measures the ability of postforming high-pressure decorative laminate to resist blistering during postforming operations.

3.15.2 Test Apparatus and Materials

The test apparatus and materials shall include:

a. A two element radiant electric heater, 120 volts, 1600 watts, or equivalent, mounted in a suitable metal lined trough. See Figure 3-18.
b. A variable output transformer.
c. Temperature indicator crayons rated 163°C (325°F) or an infrared thermometer.
d. A timer.
e. A machinist's micrometer.
f. A wind screen such as shown in Figure 3-19, or equivalent.
g. Calibration strips of a solid color white laminate (HGS type) 50 x 200 x 1.1 ± 0.05 mm (2 x 8 x 0.045 ± 0.002 inch) with the 200 mm (8 inch) dimension cut parallel with the machine direction of the laminate. The backs of the strips shall be sanded to obtain the specified thickness.
h. Overhead white fluorescent lights with bulb(s) positioned parallel to the line of sight and providing an intensity of 800 to 1100 lux (75 to 100 foot-candles) on the specimen surface.

3.15.3 Test Specimens

a. Test specimens shall be 50 x 200 mm (2 x 8 inches) x thickness, cut from the right edge, center, and left edge of the laminate. The 200 mm (8 inch) dimension shall be cut parallel with the machine direction of the laminate. Three test specimens shall be tested.
b. Test specimens shall be conditioned for at least 48 hours prior to the test at a temperature of 23° ± 2°C (73.4° ± 3.6°F) and a relative humidity of 50 ± 5 percent.

3.15.4 Calibration

a. Turn on the heating element 30 minutes prior to making any test. A voltmeter shall be used to check the applied voltage. The starting point voltage shall be 91 to 100 percent of the line voltage, e.g., 100 to 110 volts.
b. Mark the sanded back of several calibration test strips with a single centered line parallel to the 200 mm (8 inch) dimension, using a 163°C (325°F) temperature indicator crayon.
c. Place a calibration strip on the heating apparatus at the center, decorative face down, centering the marked line over the heater element. Watch the temperature indicator crayon mark on the test specimen for signs of melting. When the mark initially melts, remove the specimen from the heating apparatus. Using the calibration strips, adjust the input voltage with the transformer so that the rate of temperature rise required to reach 163°C (325°F) will be 1 second per 0.025 mm (0.001 inch) of thickness. The total variance shall be ± 2 seconds.
d. When three or more consecutive test strips reach the prescribed temperature/time curve as described in step c, begin the test.

For 1.1 mm (0.045 inch) thick laminate, the time to reach 163°C (325°F) is 45 ± 2 seconds.

Commercially available infrared thermometers may be used in place of the temperature indicator crayons. When using an infrared thermometer, its probe should be placed above the specimen to ensure that its beam target area is narrower than the width of the specimen. Record the temperature for the initial melt during the calibration procedure. This temperature should be used as the set point. The calibration of the thermometers should be in accordance with the instrument manufacturer's instructions.

Copyright National Electrical Manufacturers Association
Provided by IHS under license with NEMA
No reproduction or networking permitted without license from IHS
Not for Resale

3.15.5 Test Procedure

a. Simultaneously start the timer and place the test specimen, decorative face down, on the center of the heating apparatus.

b. Stop the timer when blistering occurs and record the time. Blistering shall be detected by visual or audible means, whichever occurs first.

3.15.6 Test Report

The blister resistance time in seconds shall be reported as the average of the test specimens.

Copyright National Electrical Manufacturers Association
Provided by IHS under license with NEMA
No reproduction or networking permitted without license from IHS
Not for Resale

Annex A
APPLICATION, FABRICATION, AND INSTALLATION

A.1 INTRODUCTION

The increasing use and application of high-pressure decorative laminates is testimony to their continued reputation for durable performance and appearance.

In recent years, the high-pressure decorative laminate industry has made many technical and aesthetic advances in its products. These are monitored and controlled by up-to-date test methods and improved manufacturing processes.

The aesthetic advances include new patterns and designs and decorative laminates that have sculptured three-dimensional surfaces, metal surfaces, and gloss. Some of these may not have the utilitarian latitude of service for horizontal applications that the regular surface finishes have and may be restricted for use (for example, vertical applications only). For recommendations on the use of a particular finish or surface the laminate manufacturer should be consulted.

By using the recommendations in this section as a starting point, users will find much to guide them in obtaining the most appropriate satisfactory installation. However, these recommendations are not intended to assume or replace the responsibility of the user to establish engineering design, practices, and procedures best suited to individual job conditions. This section will provide basic information on the fabrication and installation of decorative laminates and a better understanding of the product and its uses.

A.2 GENERAL DISCUSSION

High-pressure decorative laminates are used as surfacing material on counters, desk tops, cabinets, wall paneling, and furniture. The physical characteristics of the material should be considered in planning its fabrication and installation.

The properties of the finished laminate clad assembly will be influenced by:

a. Laminate selection (grade, finish, color, and pattern)
b. Adhesive
c. Substrate
d. Conditioning of the laminate and substrate
e. Fabrication techniques
f. Stress crack prevention
g. Balancing
h. Installation

Like wood, a high-pressure decorative laminate has a grain direction, and its dimensional behavior is similar to that of wood (see Figure A-1). When humidity changes, the width of the laminate undergoes greater dimensional change than the length by a ratio of approximately 1.5. Dimensional change is a characteristic found in varying degrees in all cellulose type materials. As humidity decreases, the laminate sheet contracts, and when the humidity increases, the laminate sheet expands.

--`,,`-`-`,,`,,`,`,,`---

Copyright National Electrical Manufacturers Association
Provided by IHS under license with NEMA
No reproduction or networking permitted without license from IHS
Not for Resale

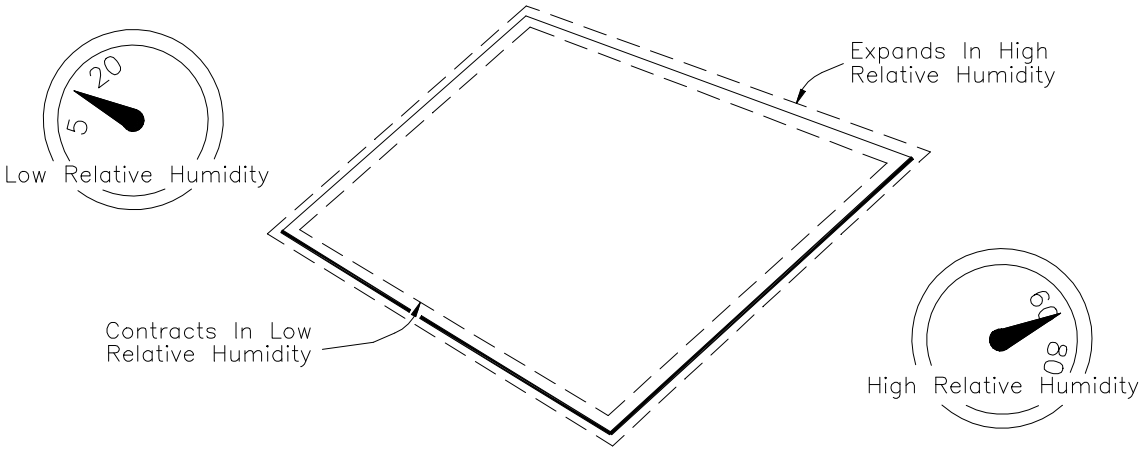

Figure A-1
HUMIDITY CHANGES

A.3 MATERIALS

Three basic materials are involved in the fabrication and installation of high-pressure decorative laminates. These are the laminate, the adhesive, and the substrate or supporting material.

A.3.1 High-Pressure Decorative Laminate

Laminates are classified in eight different types:

a. General purpose (both horizontal and vertical grades)
b. Postforming (both horizontal and vertical grades)
c. Flame retardant
d. High wear
e. Specific purpose
f. Compact laminate
g. Cabinet liner
h. Backer
i. Other

The different types were engineered to meet specific needs based on performance, economy, and use. For example, thin general purpose laminates are suitable for vertical applications such as cabinet doors and panels. Postforming laminates allow simple bends that cover edges and eliminate the need for seams between vertical and horizontal planes such as those found on a sink top or cabinet door. The flame retardant type is designed for the specific fire-rated classification in accordance with local code requirements. The general purpose type laminate is the most widely used since it is suitable for many applications and should be considered first. If another type is required, the supplier of the laminate should be consulted for recommendations as to the type of laminate to be used.

Backer sheets are used on the back of panel-assemblies to protect the substrate from humidity changes and to reduce warpage.

See Figure A-2 for an illustration of some of these types.

Copyright National Electrical Manufacturers Association
Provided by IHS under license with NEMA
No reproduction or networking permitted without license from IHS
Not for Resale

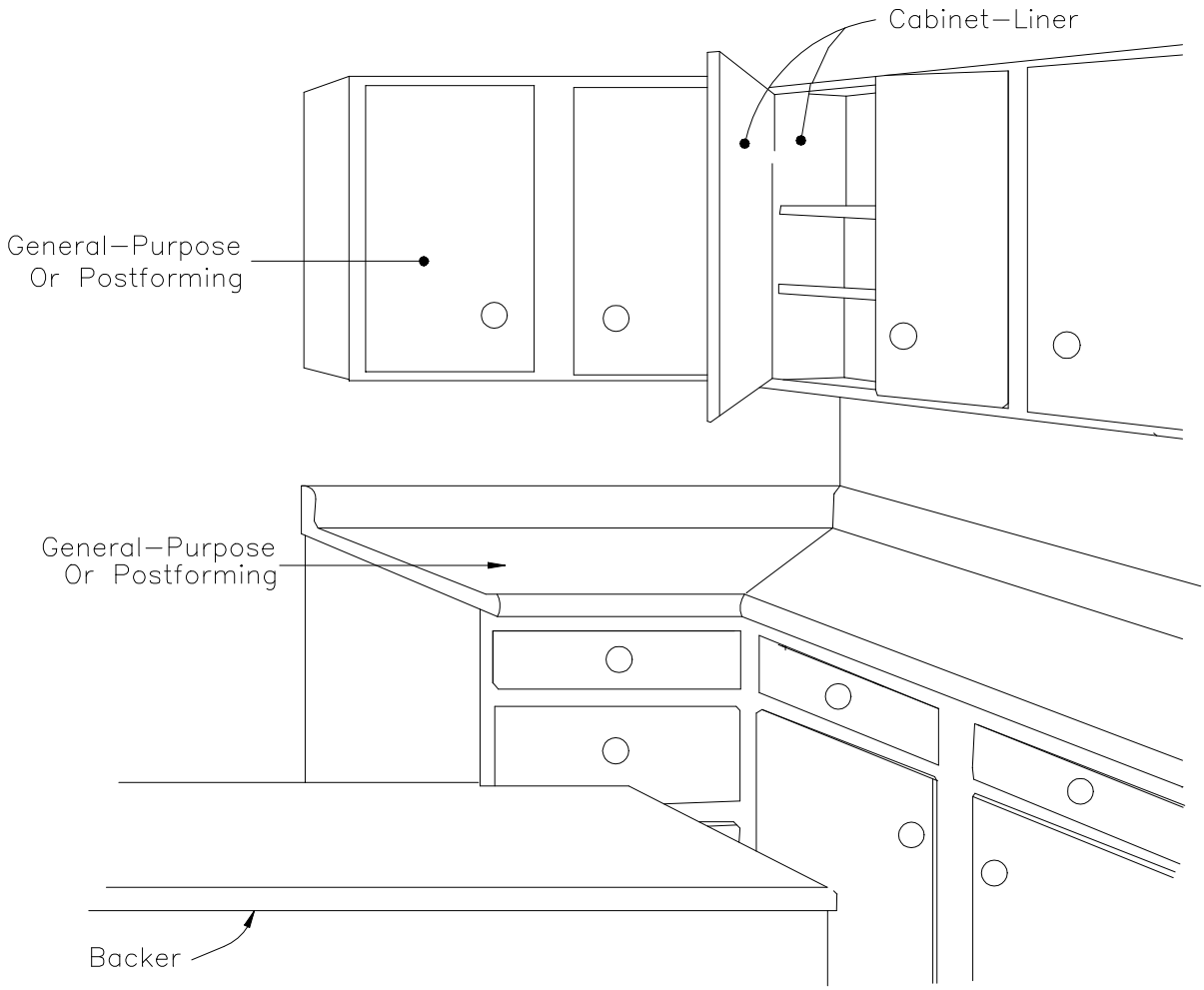

Figure A-2
TYPICAL TYPES OF LAMINATE USE

A.3.2 Adhesives

A variety of adhesives have been found satisfactory for bonding decorative laminates to core materials. The choice of adhesive is based upon the service for which the assembly is intended and upon the bonding facilities available. In all cases, the adhesive manufacturer's instructions for use should be followed closely. Contact adhesives do not restrict the movement of the laminate caused by varying humidity conditions to the same extent as thermosetting adhesives. This characteristic should be kept in mind when selecting the adhesive for the application.

The following information for the individual types of adhesives is intended only as a supplement to the manufacturer's instructions.

A.3.2.1 Contact Types

Contact adhesives may be used for bonding laminates to a variety of cores. They are particularly useful for application to metal or other impervious surfaces. There are two primary types of contacts: solvent-based and water-based. Water-based adhesives are not suitable for bonding laminates to steel or iron surfaces. The solvent or the water must be evaporated before satisfactory bonding can be accomplished.

Copyright National Electrical Manufacturers Association
Provided by IHS under license with NEMA
No reproduction or networking permitted without license from IHS
Not for Resale

Contact adhesives should be uniformly applied to both surfaces to be bonded by a brush, sprayer, or paint roller. Brush application is the least desirable method because of the difficulty in obtaining uniform application.

These adhesives have high immediate bond strength, and once contact has been made, the components cannot be moved.

A.3.2.2 Polyvinyl Acetate Types (White Glue)

Polyvinyl acetate (PVAc) emulsion adhesives may be used for bonding laminates to wood substrates where resistance to moisture and high heat are not required in the application (e.g., furniture, kitchen cabinets, and office partitions). They may be both room temperature and hot pressed setting adhesives requiring only that the water in the emulsion be absorbed by the components. Catalyzed PVAc offers improved moisture and heat resistance.

A.3.2.3 Thermosetting Types

a. Urea-formaldehyde adhesives are satisfactory for most applications. They can be used for room temperature bonding or for "hot" bonding. Hot bonding may tend to increase panel warpage, and a backer laminate should be used to reduce warpage. When hot bonding, the temperature should not exceed 85°C (185°F) for best results.

b. Resorcinol and phenol-resorcinol adhesives are recommended for use when moisture resistance and heat resistance are required. They may be used in either hot-pressing or room temperature bonding. Phenol-resorcinols are sometimes used as a pre-impregnated adhesive sheet in a hot-pressing operation. Resorcinols can be used with fire rated laminates to meet specific fire rated classifications.

c. Epoxy adhesives are liquids with no volatile components. They have good gap-filling and low shrinkage properties and are used mainly for bonding laminates to impervious cores such as steel. They should be catalyzed for use in either hot or room temperature bonding operations.

A.3.2.4 Hot Melt Types

Hot melt adhesives are suitable for use only in edge banding operations because of their low heat resistance. It is recommended that the particular grade adhesive chosen should have a minimum softening point of 65°C (150°F). Most hot melt manufacturers recommend a primer be applied to the back of the high-pressure decorative laminate prior to bonding. The adhesive manufacturer's recommendation for environmental conditions during application should be closely followed due to the application temperature sensitivity of the adhesive.

A.3.2.5 Urethane Types

Urethane adhesives are liquids with 100% solids and no volatile components. They have good gap-filling and low shrinkage properties and are used mainly for bonding laminates to impervious cores such as steel. There are various hot-melt urethane type adhesives which are utilized for bonding to medium density fiberboard. These adhesives may be either moisture cured or catalyzed and may be pressed in either hot or room temperature bonding operations.

A.3.3 Substrate

Good quality particle board and medium or high density fiberboards are satisfactory for use as substrates since they supply the degree of rigidity needed to support the laminate and offer a suitable face for bonding. Many particle boards are engineered for flatness. These boards have, for example, strata of varying chip size with the finer chips at the surface. Their dimensional movement is similar to that of high-pressure decorative laminate.

Copyright National Electrical Manufacturers Association
Provided by IHS under license with NEMA
No reproduction or networking permitted without license from IHS
Not for Resale

The face of the substrate should be sanded smooth and be free from grease, wax, dust, or other contaminants which would interfere with adhesion. It should also be free of chips or other foreign matter which might show through the decorative surface after bonding.

Plywood, steel, aluminum, or fiber-reinforced plastic (FRP) may be used in some applications, but their dimensional movement is significantly different than high-pressure decorative laminate. This may result in potential panel warpage, stress cracking, and open seams.

It should be noted that certain properties of the assembly are influenced by the substrate. Plaster board, gypsum board, plaster, concrete, and similar materials are not recommended because their internal bond strength is not sufficient for this application.

A.3.4 Factors Affecting Bonded Assemblies

Some factors that affect bonding are shown in Figure A-3. Causes and recommendations for avoiding failures are:

a. Insufficient amount of adhesive on either or both of the surfaces to be bonded—When ready for bonding, the spread film of most contact adhesives will exhibit a uniform semi-gloss appearance over the entire surface of the materials to be bonded. Marked variation in appearance will generally indicate an improper or nonuniform adhesive spread. The substrate can generally be seen more readily through those areas where insufficient adhesive has been applied. If this occurs, recoating the surfaces should achieve a uniform coating. Double coating the edges with adhesive is advisable because of the higher porosity of the substrate edge.

b. Insufficient bonding pressure—To ensure intimate contact necessary for an adequate bond, sufficient pressure should be applied over the entire area using as much pressure as possible without damaging the assembly. Pinch rollers (rotary press) and heavy weighted rollers are ideal. Hand pressure rolling is adequate providing the operator exerts maximum pressure by means of a two-handled or single long-handled roller. The rollers should be of steel or hard solid rubber (50–80 durometer) and not over 75 mm (3 inches) wide. Hand rolling should be done from the center to the edges to ensure the removal of all air bubbles. The edges should be rolled twice.

c. Bonding when adhesive surfaces are over-dry or under-dry—Care should be taken to follow the manufacturer's recommendations concerning the allowable tack range of the adhesive. If assembly is made before the adhesive is dry, or after the allowable open time is exceeded, an unsatisfactory bond may result.

d. Bonding of surfaces under 21°C (70°F)—Unless otherwise indicated by the manufacturer, the temperature of the gluing area and all materials should be 21°C (70°F) or above.

e. Bonding of surfaces when humidity is too high—Experience has shown that when the relative humidity is above 80 percent at temperatures of 21°C (70°F) or lower, moisture may condense on the surface during drying (known as "blushing") and will prevent an acceptable bond. Hot spray or forced air drying may be used to help prevent this condition.

f. Improperly prepared or dirty gluing surfaces—The surfaces should be clean, dry, and free of oils or other contaminants, such as dust, loose paint particles, and so forth. The adhesive film should have full contact with the surface to which it is applied in order to give maximum adhesion.

g. Adhesive not agitated or stirred thoroughly—The adhesive should always be stirred or agitated before use. This is particularly necessary with large containers.

h. Field bonding of oversized sheets—It is recommended that the maximum sheet size used for vertical field application be limited to 610 x 2400 mm (2 x 8 feet). If larger panels are required, these should be fabricated in the shop.

Copyright National Electrical Manufacturers Association
Provided by IHS under license with NEMA
No reproduction or networking permitted without license from IHS
Not for Resale

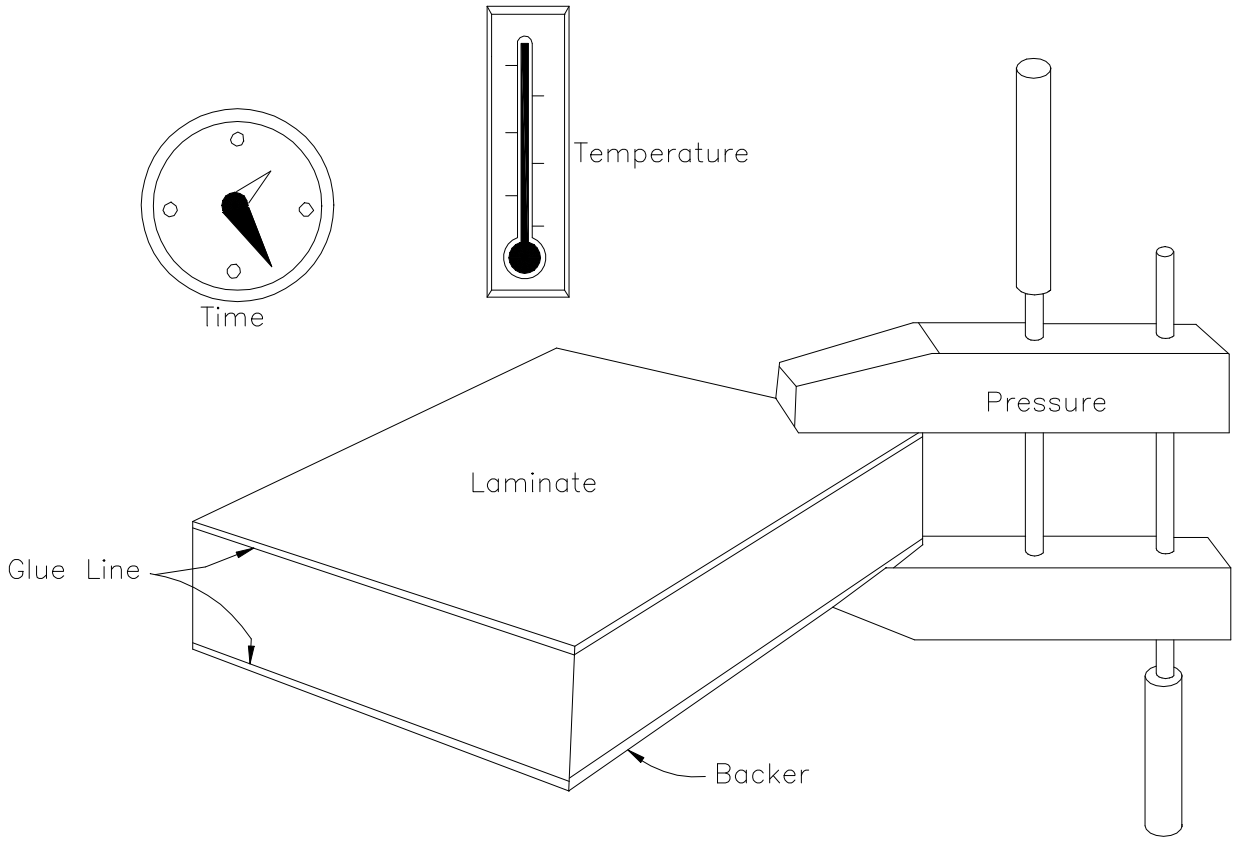

Figure A-3
FACTORS AFFECTING BONDED ASSEMBLIES

A.4 CONDITIONING AND STORAGE OF MATERIALS PRIOR TO FABRICATION

Materials should be properly conditioned before they are used. Conditioning should make allowances for the geographical location in which fabrication or installation takes place. For example, end products that are produced and used in the Southeastern United States are not as susceptible to shrinkage of the laminate with its attendant problems, as are articles used in northern climates. This is due to the fact that in the Southeast, the average yearly humidity is higher, and the temperature does not vary as widely. Similarly, installations in the Southwest, which normally has low humidity, are not as likely to be affected by changes in the length and width of the laminate after fabrication. In these areas, normal conditioning of the component parts for 48 hours prior to fabrication at the prevailing climatic conditions is usually sufficient for the satisfactory fabrication and installation.

However, end products are now frequently fabricated in one area of the country and marketed in a distant area. For example, a wardrobe may be fabricated in a location where temperature and humidity are both high and then be shipped into an area where they are both low. The laminate will tend to reach moisture equilibrium with the new environment and shrink. In such cases, it is advisable to dry the components before fabrication of the end product, and the use of a thermosetting adhesive is highly recommended.

Allow high-pressure decorative laminate and the substrate to acclimate for at least 48 hours at the same ambient conditions. Optimum conditions are approximately 23°C (73°F) and a relative humidity of 45 to 55 percent. Provision should be made for the circulation of air around the components.

Copyright National Electrical Manufacturers Association
Provided by IHS under license with NEMA
No reproduction or networking permitted without license from IHS
Not for Resale

Laminate sheets should be stored horizontally with the top sheet turned face down and a caul board placed on top to protect the material from possible damage and reduce the chance of warpage. Warped laminate sheets can be used unless the warp is so great that they cannot be properly fed through glue spreading or bonding equipment. Warp in the laminate sheet prior to bonding is not a cause of warp in the finished panel.

Stored laminate stock should be rotated such that older sheets will be used first. Laminate sheets should be protected from moisture and should never be stored in contact with the floor or outside wall.

Always carry laminate sheets vertically. Handle full size sheets carefully to avoid breakage or injury. It is recommended that 2 people carry full size sheets. Be careful when moving sheets so as not to strike them against anything that could damage the decorative surface or the edges. Always lift sheets from one point to another. Never slide sheets on their decorative surface.

A.5 FABRICATION TOOLING

The proper types of tools for fabricating decorative laminates may be obtained from many local tool suppliers. The following information is intended only as a supplement to their recommendations.

A.5.1 Sawing

To avoid chipping, it is important that the saw blade teeth cut into the decorative face.

A.5.1.1 Band Sawing

A band saw is recommended for curved or straight cuts when smooth edges or close tolerances are not required. For smooth edges on curved cuts, the part should be cut oversized and finished by routing, filing, or sanding.

A woodworking or metal cutting band saw blade may be used. Nineteen to 20 gauge carbon steel blades or hardened steel blades with soft backs should be used, with teeth ranging from 16 to 18 points per inch. Contour cutting requires a blade width of 6.35 to 12.70 mm (1/4 to 1/2 inch).

Straight cutting requires a blade width of 25.4 to 44.5 mm (1 to 1-3/4 inch). The teeth should have a medium set for straight cuts and a heavy set for contour cuts. The amount of set depends upon the radius of the cut required. The teeth should be kept sharp at all times. Adjust saw speed to maintain 1524 to 2438 surface meters (5000 to 8000 surface feet) per minute, feeding the work into the blade at a rate only as fast as it will cut without forcing the saw.

A.5.1.2 Circular Sawing

a. Floor or bench saws have been shown to be satisfactory. Material should be supported near the point of blade contact to avoid vibration that causes chipping. A triple chip grind tooth configuration is recommended for blades. In general, the blades illustrated in Figure A-4 and meeting the conditions of Table A-1 have been found to be satisfactory. Both tungsten carbide and diamond tip blades have shown to be excellent tools for sawing high-pressure decorative laminate.
b. Powered circular hand saws with 60 carbide tipped teeth may be used for rough cutting. If used, the teeth should cut into the decorative face of the laminate in order to avoid excessive chipping. This means the laminate should be cut in the face-down position.

A.5.2 Routing

Routing may be done with electric or air powered routers. Cutters should be carbide tipped. The speeds recommended are the same as those used in standard woodworking practices. Router speed

--`,,`-`-`,,`,,`,`,,`---

Copyright National Electrical Manufacturers Association
Provided by IHS under license with NEMA
No reproduction or networking permitted without license from IHS
Not for Resale

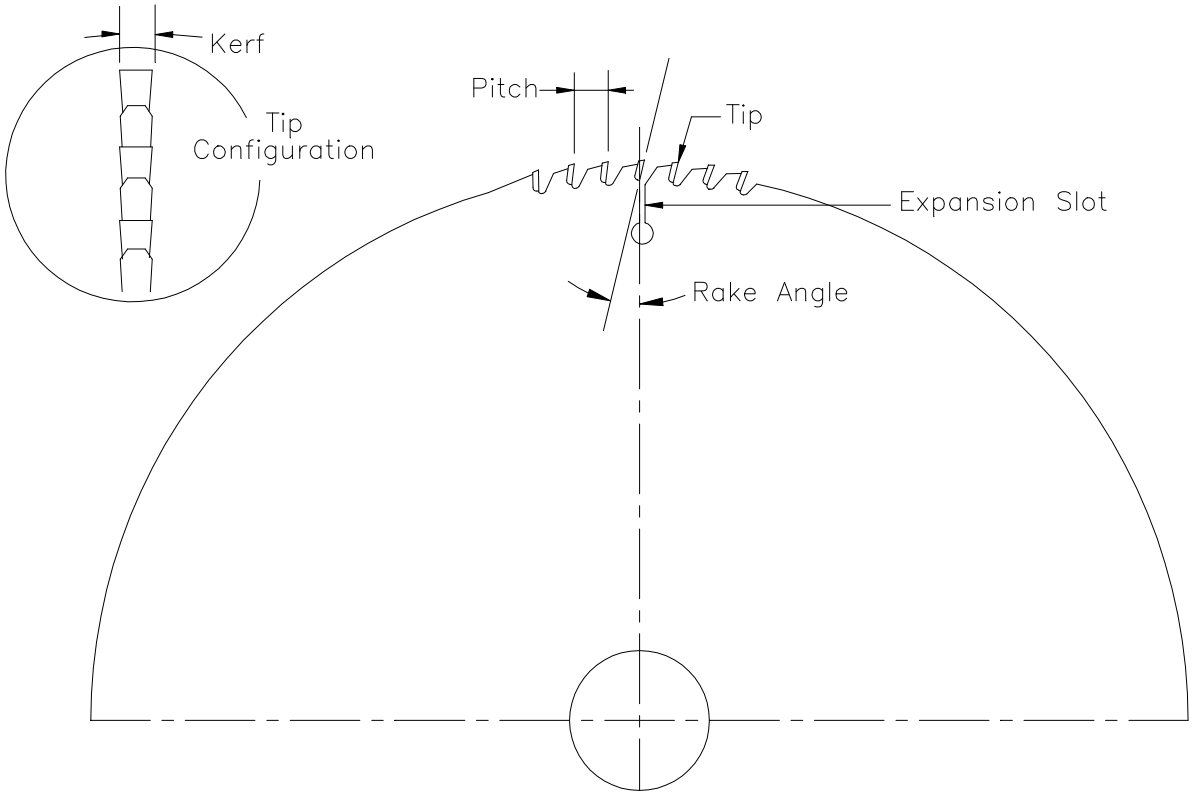

Figure A-4
SAW BLADES

Table A-1
TYPICAL BLADES

Parameter	Unbonded Laminate	Bonded Panel—19 mm (3/4 in)
Diameter	203.2 to 355.6 mm (8 to 14 in.)	203.2 to 355.6 mm (8 to 14 in.)
Speed per minute	2438 to 4572 m (8000 to 15000 ft.)	2438 to 4572 m (8000 to 15000 ft.)
Pitch	10.59 mm or less (0.417 in. or less)	13.21 mm or less (0.520 in. or less)
Rake angle	10 to 15 degrees	10 to 15 degrees
Kerf	1.74 to 2.79 mm (0.068 to 0.110 in.)	2.39 to 3.43 mm (0.094 to 0.135 in.)

should be 16000 to 22000 rpm. It is important to use a router having adequate horsepower to maintain cutting speeds (based on the type and amount of material to be cut). For special edge trimming, very high-speed routers are available that produce smooth-edge chip-free work.

Sharpness of the router cutters should be maintained.

A.5.3 Sanding

Belt sanders may be used to flush the self-edge before the laminate top is applied. However, care should be taken to direct the sanding operation away from or parallel to the decorative surface.

A.5.4 Drilling

Decorative laminates can be drilled using an electric drill with the more common types of drill bits (e.g. high speed steel, twist drill, forstener, or brad point bits). Large holes can be drilled using a hole saw, a

Copyright National Electrical Manufacturers Association
Provided by IHS under license with NEMA
No reproduction or networking permitted without license from IHS
Not for Resale

flycutter, or by plunge cutting with a router and template. For machine drilling (drill press), a high speed straight shank twist drill is satisfactory.

To prevent stress cracking, the drill diameter should always be 0.05 mm (0.002 inch) larger than the specified diameter of the hole. Regardless of the diameter of the hole, all material being drilled should be backed up with wood to prevent breakout at the bottom of the drilled hole.

A.6 GENERAL RULES FOR FABRICATION AND INSTALLATION

A.6.1 Fabrication in the Shop

Good fabrication techniques indicate the following basic guidelines:

a. Storage conditions—A primary consideration of the fabricator should be the proper storage and conditioning of component materials. Both the laminate and the substrate should be conditioned for a minimum of 48 hours at a temperature between 21º to 24ºC (70º to 75ºF) and a relative humidity of 45 to 55 percent (see Figure A-5) prior to bonding.

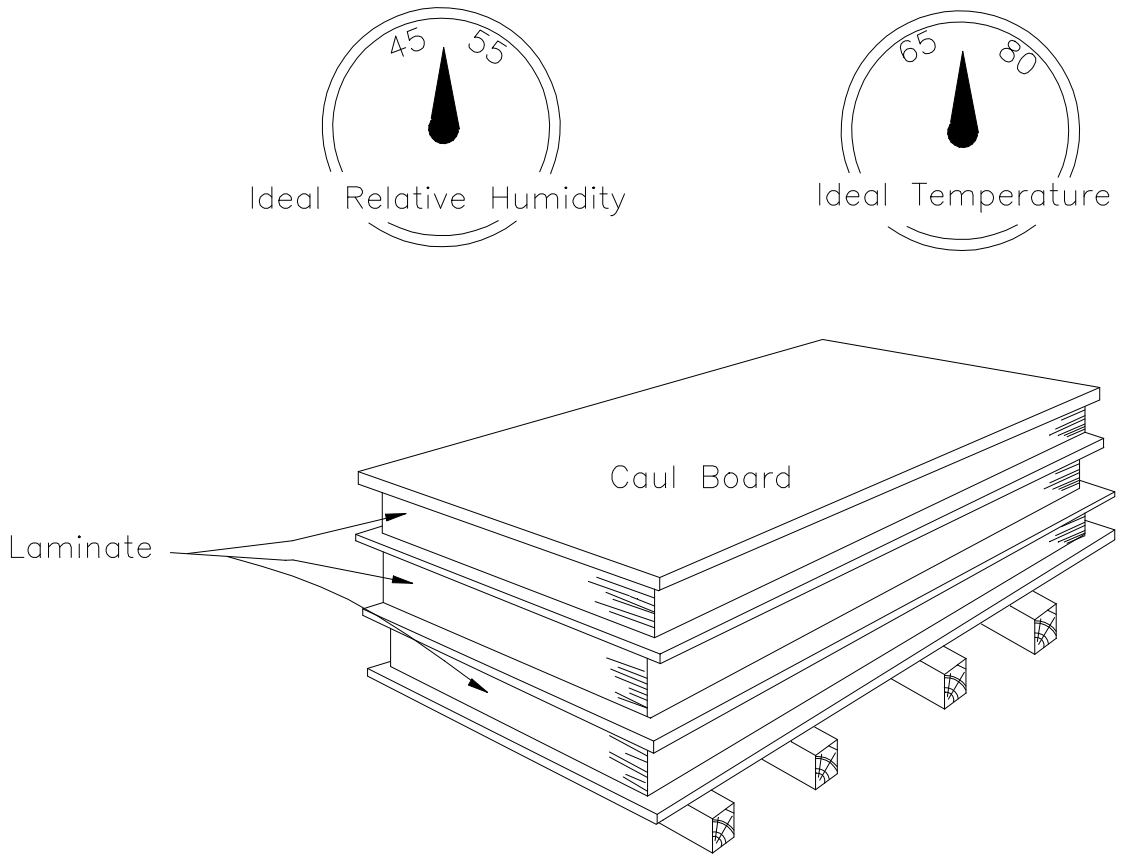

Figure A-5
CONDITIONING OF LAMINATE

b. Control of the glue line—Control of the glue line is another consideration, and the thickness and uniformity of spread should be given constant attention. The substrate (and, in the case of contact adhesives, the laminate) should be coated with adhesive over the entire area where contact will be made. Spot bonding should never be used.

Copyright National Electrical Manufacturers Association
Provided by IHS under license with NEMA
No reproduction or networking permitted without license from IHS
Not for Resale

c. Adhesives—Specific conditions are recommended by each adhesive manufacturer, and these conditions should be followed.

1. Contact—Contact adhesives are widely used in the laminate industry. They require no expensive press, and even large pieces can be field applied. Contact adhesives can be applied by brush, roller, hand spray, or automated spray. They are ideal for postforming since they are heat reactivated, and since they are relatively water resistant, they are good for countertop applications. Flammable, non-flammable, and water-based formulations are available. Contact adhesives are good for laminating nonporous surfaces. Drawbacks of contact adhesive in comparison to many other types of adhesives include lower heat resistance, reduced resistance to stress crack and shrinkage due to their elastomeric nature, thickness of glue line, and toxic and/or flammable vapors.

   It is important that all surfaces to be bonded are clean, dry, and free of dust, oil, and other foreign matter. The work area, substrate, laminate, and adhesive should be maintained at 21°C (70°F) or warmer.

   The substrate and laminate should be uniformly coated with adhesive over the entire area where bonding contact will be made. Spot bonding should never be used. Drying time will vary depending on temperature and humidity. The adhesive is ready to bond when it will not transfer to smooth kraft paper in a touch test. Forced drying may be used to speed the process or overcome fluctuations in ambient temperature or humidity. Forced drying may be necessary when bonding to metal or other nonporous materials. To assemble, prealign or index the surfaces to be bonded. Indexing sticks will prevent contact of the adhesive surfaces until proper alignment is achieved. Once contact is made, ample pressure must be applied to insure a strong bond. A pinch roller is preferred, with pressure between 0.90 and 1.35 kilograms per linear millimeter (50 and 75 pounds per linear inch), but pressure may also be applied with a “J” roller (see Figure A-6). Refer to Section A.3.4 for more information on bond pressures.

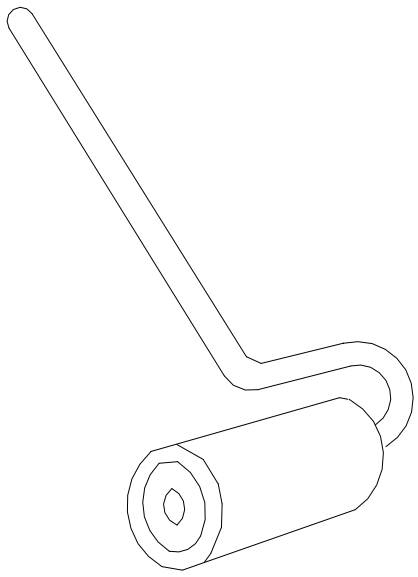

Figure A-6
“J” ROLLER

2. Semirigid and rigid—Semirigid polyvinyl acetate (PVAc) adhesives and rigid urea, resorcinol, and epoxy adhesives require pressure in a cold (room temperature) or hot press operation at approximately 275 kPa (40 psi) for an extended period of time. Semirigid adhesives are

Copyright National Electrical Manufacturers Association
Provided by IHS under license with NEMA
No reproduction or networking permitted without license from IHS
Not for Resale

strong, colorless, easy to use, odorless, nontoxic, nonflammable, and easily cleaned up with water; catalyzed Type A versions are water resistant. Rigid adhesives are also strong and water resistant, but many are toxic and hard to clean up. Resorcinols are used in Class 1(A) fire rated applications.

Proper adhesive spread and pressure should produce a small bead of adhesive flowing out all of the way around the edge of the glue line. A minimum of about 275 kPa (40 psi) is required, and excessive pressure can result in a starved glue line or telegraphing of the substrate.

d. Machining techniques—All chips, saw marks, and hairline cracks should be removed by filing, sanding, or routing as they will weaken the laminate and may lead to potential stress cracking problems at a later time. Saws and routers with carbide tipped blades are recommended to ensure chip free edges and prolonged tool life.

e. Cutouts and inside corners—The inside corners of all cutouts for electrical outlets, ranges, sinks, grills, "L" shaped countertops, etc. must have a minimum radius of 3 mm (1/8 in.) or larger to reduce the possibility of stress cracking. A radiused corner created by a 6 mm (1/4 in.) diameter router bit is normally used. All edges and inside corners should be filed smooth and free of any chips or nicks.

f. Waterproofing joints—Waterproof the backsplash seam areas on countertops that can be exposed to water or other fluids. A rabbet and groove construction with a waterproof adhesive or a receiving type molding with silicone caulking will provide satisfactory protection.

g. Warpage reduction—Panel warpage can be reduced by acclimating the material, using the same laminate on both panel sides, aligning the sanding marks on both sides, and using the same adhesive and application techniques on both sides. Thick cores resist warpage better than thinner cores. Paint, varnish, vinyl film, and fiber backers will not balance high-pressure decorative laminates. Spacing is required between panels to allow for movement.

A.6.2 Postforming Laminates

All forming materials have the same basic characteristics. However, each laminate supplier knows the inherent properties of their postforming-type laminate and should be consulted before starting.

Postforming laminates are made by incorporating modified thermosetting resins and by pressing techniques, which allow the material to be thermally bent. The bend should be achieved quickly and uniformly when the proper temperature is reached. The reaction is final, and once bent the laminate cannot be reformed by reheating. Therefore, proper forming equipment and close attention to detail are recommended in this type of shop operation.

Some postforming fabricators maintain a list of each laminate by pattern along with the conditions of time and temperature which yield the most satisfactory results. Such data is most helpful when fabricators and laminate suppliers find it necessary to discuss technical problems.

Since countertops are secured to a framework, backer sheets are rarely used (see Figure A-7).

Installations exposed to higher than normal humidity conditions should have the sink cutout and all exposed wood sealed with paint, polyurethane varnish, or an appropriate backer sheet. Postformed cabinet doors (see Figure A-8) generally require a backer sheet or decorative laminate to minimize warpage. All materials should be properly conditioned, and all rules previously listed apply to this type of installation.

--`,,`-`-`,,`,,`,`,,`---
Copyright National Electrical Manufacturers Association
Provided by IHS under license with NEMA
No reproduction or networking permitted without license from IHS
Not for Resale

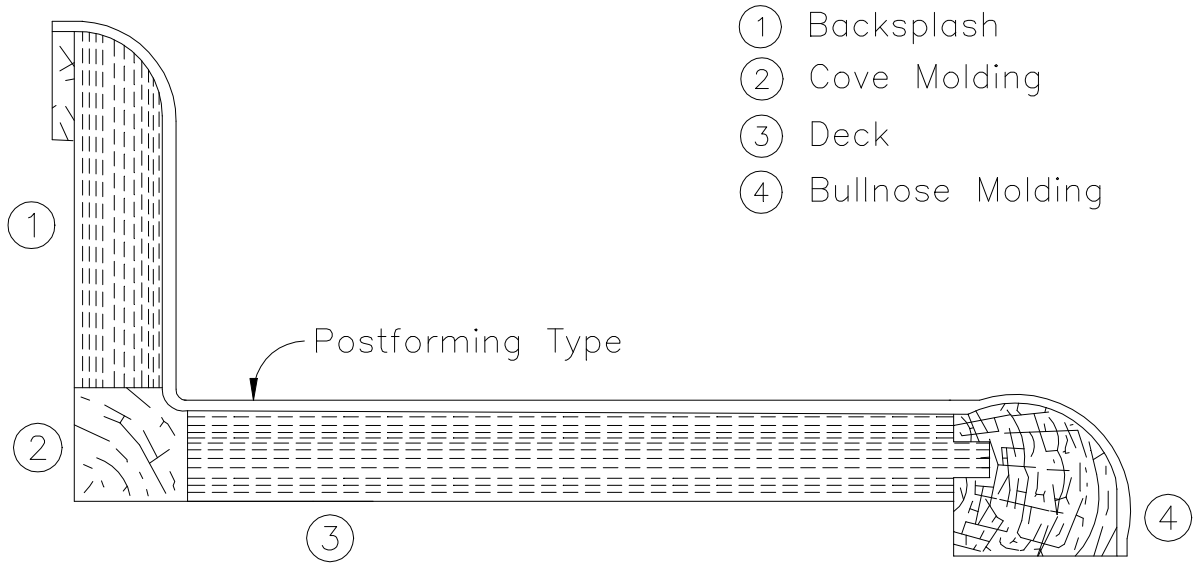

Figure A-7
TYPICAL POSTFORMED TOP

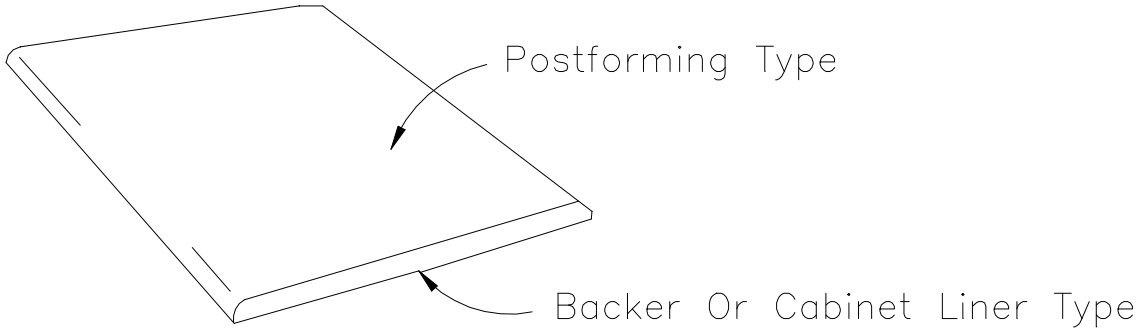

Figure A-8
CABINET DOOR

Bullnose, cove, and backsplash style moldings should have straight parallel surfaces so that the postforming material can be bent uniformly. Do not attempt to draw the laminate into compound radiused shapes.

A.6.3 Installation on the Job

Some major applications of laminates are in the construction of new buildings and the upgrading of old ones. As a final step before occupancy, counters which have been installed by the builder may be surfaced with laminates. Normally the material to be covered will be particle board or plywood of good quality and should have a minimum number of seams. Contact adhesive should be used to bond the laminate to the substrate. On-the-job installation of laminates usually involves inside corners, outside corners, and cutouts. The fabricator is once again cautioned to observe all of the general rules listed in A.6 for working with laminates and should follow them implicitly. The importance of pressure when using contact adhesives cannot be over emphasized. A pressure of 0.90 kilograms per linear millimeter

Copyright National Electrical Manufacturers Association
Provided by IHS under license with NEMA
No reproduction or networking permitted without license from IHS
Not for Resale

(50 pounds per linear inch) should be used. Pinch rollers are not practical for on-the-job applications. However, a long handled rubber roller with a roll 50 to 75 mm (2 to 3 inches) in diameter and 75 mm (3 inches) wide, commonly called a "J" roller, can be used satisfactorily (see Figure A-6). Pressure should first be applied to the center of the sheet, working toward the edges to avoid trapping air, which can cause surface bubbles, blisters, or cracking.

In summary, on-the-job installations should provide for proper conditioning of the laminate, proper application of the adhesive, and close conformance with the general rules given in A.5 and A.6.

A.6.4 Field Working of Bonded Assemblies

Bonded decorative laminate assemblies may be sawed, routed, filed, drilled, and otherwise worked and fitted in the field. The tools used may be hand or power operated. Since decorative laminates may dull tools more rapidly than wood, it may be necessary to sharpen tools frequently as dull tools cause chipping. Carbide-tipped tools are recommended.

The following suggestions should be followed:

a. Chamfer edges—Chamfer all exposed edges of decorative laminates by filing to prevent possible damage by chipping.
b. Splines—When using splines, install them so that the tongue of the spline stays at least 1.6 mm (1/16 inch) away from the bottom of the groove. This should permit some movement and should tend to prevent warping in the event of panel movement.
c. Seal edges—Seal exposed core edges by self-banding with laminate, with metal moldings, with waterproofing compounds, or by some other suitable means where they are exposed to water or high humidity. This is particularly applicable to joints in work tops, counters, bars, sink tops, baths, shower areas, and so forth.
d. Cutouts—Avoid making cutouts in bonded assemblies where the entire core is cut away, thus leaving the laminate unsupported. Cutouts may be made, but some portion of the core material should remain as a support. In sawing angle cuts, such as in "L" shaped counters, care should be exercised so that the laminate is not undercut. All inside corners should be radiused to prevent stress cracking.
e. Miter joints—Avoid making miter joints at 45° angles for outside corners of wall paneling, applied edges of tops, etc. A miter joint is particularly vulnerable to damage from sharp blows.
f. Joining systems—Avoid using systems to join two or more sections of horizontal work surfaces, which tend to weaken the structural rigidity of the joint. An example of a good system is the use of mechanical metal fasteners, which permit accurate alignment and increase the strength at the joint.
g. Inside corners—Avoid making cutouts having sharp corners and rough edges. All cutouts should be routed or filed to ensure smooth edges. A radius of 3.175 mm (1/8 inch) or larger in the corners is recommended to minimize stress cracking. The largest practical radius should be used.

A.7 TYPICAL PROBLEMS—CAUSES AND PREVENTION

Some problems that may arise after laminates have been fabricated and installed are:

a. Stress cracking—Cracking of the laminate at corners and around cutouts (see Figure A-9) may be caused by improper conditioning, improper bonding, poor planning, or any combination of these. Conditioning both the laminate and the substrate helps to prevent cracking caused by shrinkage. Rough edges, inside corners that have not been radiused, and forced fits can also cause cracking. Radiusing all edges and inside corners as large as possible 3 mm (1/8 in.) minimum will minimize stress cracking. A radiused corner created by a 6 mm (1/4 in.) diameter router bit is normally used. Seam placement of the laminate can also reduce stress cracking.

Copyright National Electrical Manufacturers Association
Provided by IHS under license with NEMA
No reproduction or networking permitted without license from IHS
Not for Resale

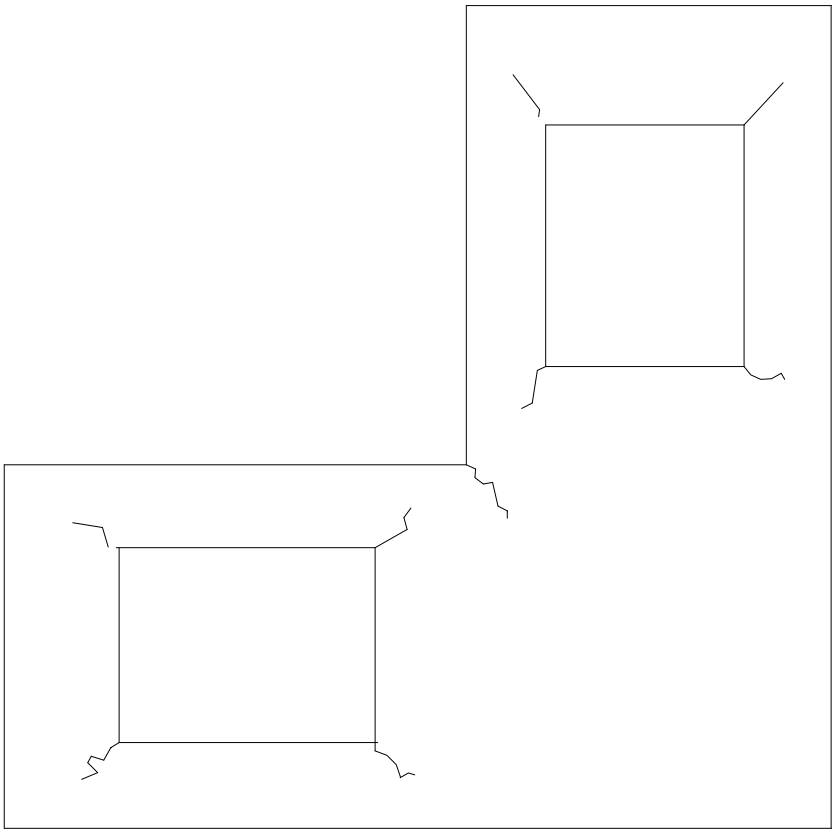

Figure A-9
CRACKING OF LAMINATE

b. Open seams—Open joints or seams (see Figure A-10) are typically caused by improper conditioning and/or bonding. Conditioning both the laminate and the substrate helps prevent open seams caused by shrinkage. Allowance should also be made for some movement of the laminate.

c. Glue line delamination—Separation of the laminate from the substrate (see Figure A-11) is generally caused by a poor adhesive bond. Factors which can influence the bond and cause poor adhesion are:

1. Improperly prepared or dirty gluing surfaces
2. Insufficient agitation or mixing of the adhesive
3. Insufficient amount of adhesive on either or both surfaces
4. Temperature of the gluing area and materials below 21°C (70°F)
5. Blushing caused by excessive humidity
6. Bonding when the adhesive-coated surfaces are overdried or underdried
7. Bonding with insufficient pressure
8. Field bonding of oversize sheets

Contact adhesives can often be reactivated by heat and rebonded with proper pressure provided that adequate adhesive has been applied. In cases where the edge is lifting, extra adhesive may be added and the proper pressure applied.

Copyright National Electrical Manufacturers Association
Provided by IHS under license with NEMA
No reproduction or networking permitted without license from IHS
Not for Resale

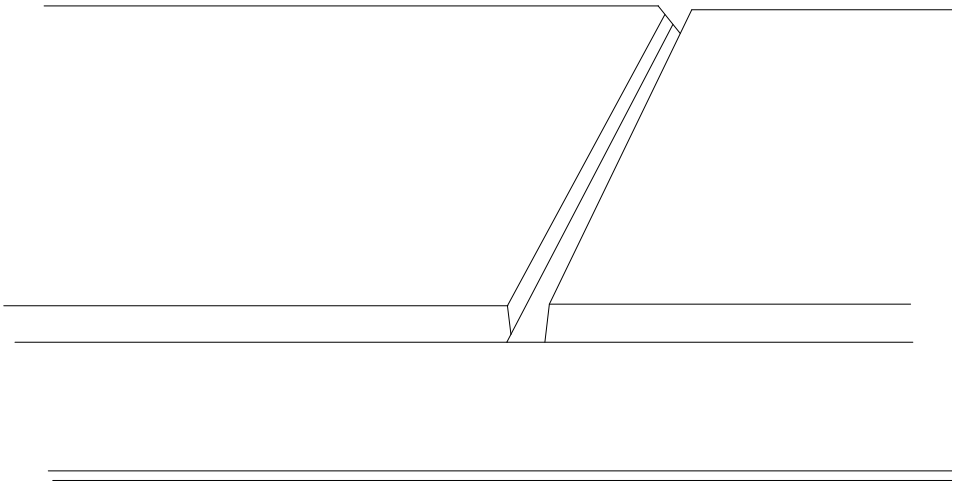

Figure A-10
OPENING OF JOINTS OR SEAMS

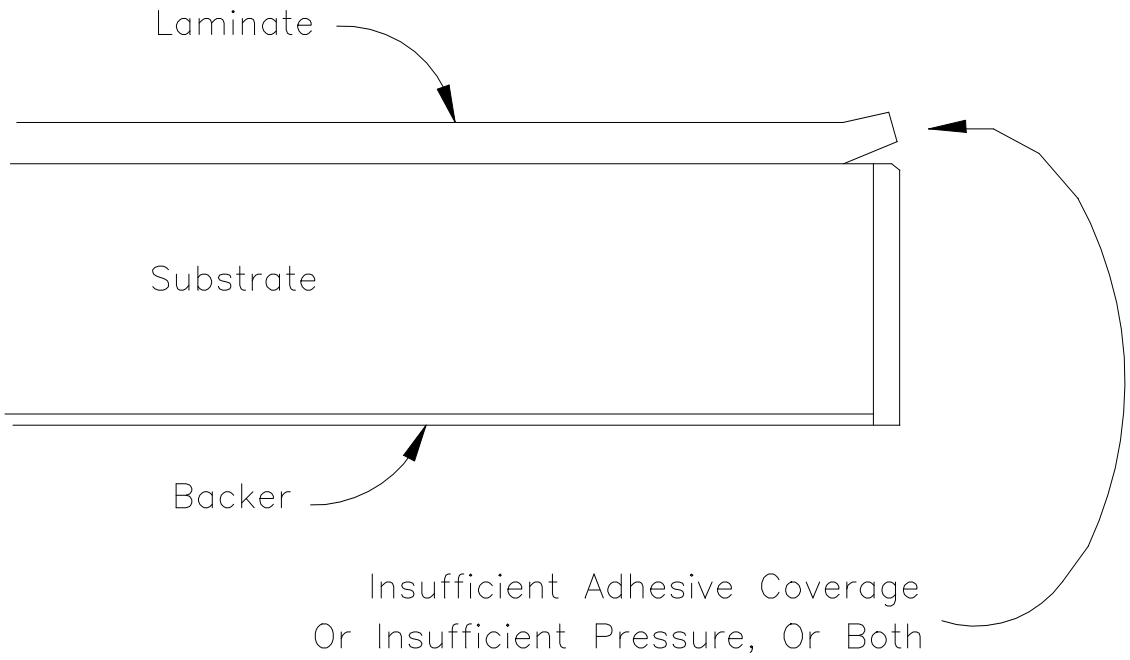

Figure A-11
SEPARATION OF THE LAMINATE FROM THE SUBSTRATE

d. Blistering or bubbling caused by exposure to heat—The forming of a blister or bubble over a small well defined area, often accompanied by darkening of the laminate, can be caused by either a single or continual exposure to an outside source of heat. Appliances which produce heat, hot objects, light bulbs, etc. should not be placed in contact with or in close proximity to the laminate surface. Temperatures exceeding 66°C (150°F) may result in separation of the laminate from the substrate due to adhesive failure.

Copyright National Electrical Manufacturers Association
Provided by IHS under license with NEMA
No reproduction or networking permitted without license from IHS
Not for Resale

e. Laminate cracking—Cracking in the center of the laminate sheet can be caused by flexing of the substrate when it spans a wide distance or by spot gluing. Wide spans require sturdy framework and all glue lines should be uniform. Avoid trapping foreign objects in the glue line between the laminate and the core as cracks will occur when pressure is applied.

f. Panel warpage—Warping of the assembly (see Figure A-12) is generally attributed to the differences in dimensional change between the face and back laminates and the core or substrate material. Different adhesives or application techniques used on the front and back face can also cause panel warpage. When one side of a panel assembly is subjected to different humidity conditions than the other side, warpage can result. Warpage can also result during hot pressing operations where the press platens have different temperatures. All panel components should be acclimated to the same environment prior to fabrication. Critical applications requiring a well balanced assembly should be constructed with the same laminate applied to both sides. Less critical applications may only require a cabinet liner or backer. Paint, varnish, vinyl film, and other coatings will not balance a panel having laminate on the other side. If the panel is secured to a framework, the framework should be designed and constructed to hold the assembly in a flat plane.

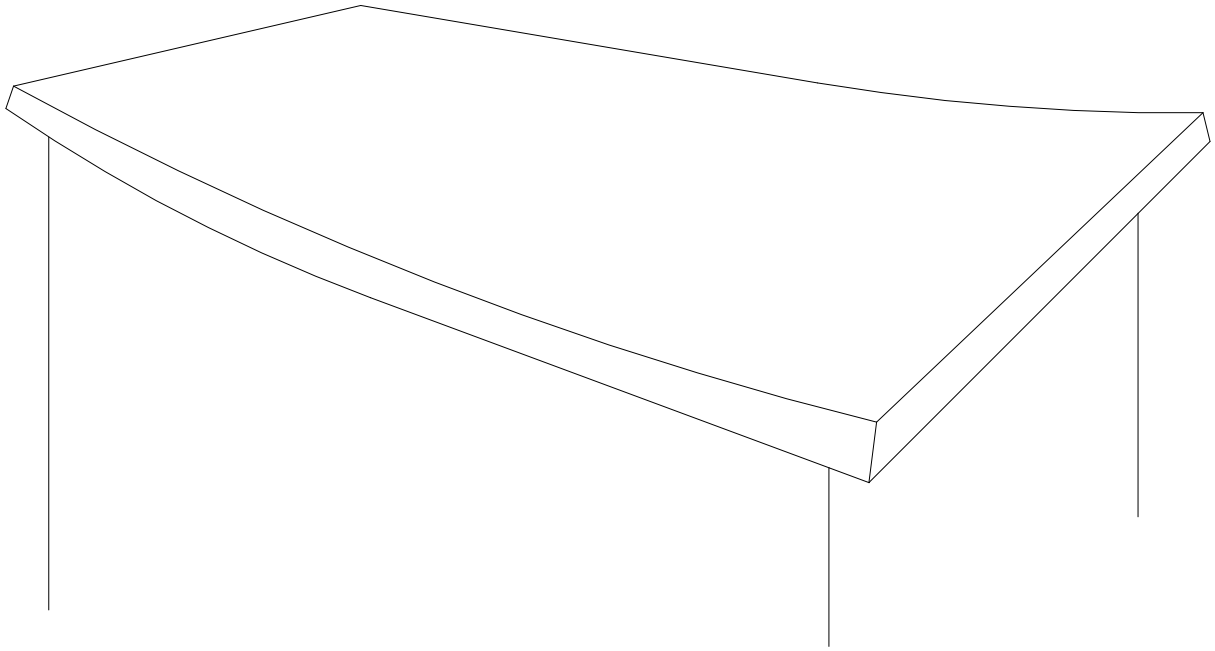

Figure A-12
LAMINATE WARPING

Copyright National Electrical Manufacturers Association
Provided by IHS under license with NEMA
No reproduction or networking permitted without license from IHS
Not for Resale

Annex B
CARE AND CLEANING OF LAMINATES

The hard, durable melamine surface of high-pressure decorative laminate will maintain its attractive appearance longer than most other decorative surfacing materials. Unlike other fine surfacing materials, high-pressure decorative laminate requires minimal maintenance. The following procedures should be taken to prolong its original appearance.

a. Cleaning
   1. To clean the surface, use a damp cloth or sponge and a mild soap or detergent.
   2. Difficult "stains" such as coffee or tea can be removed using a mild household cleaner/detergent and a soft bristle brush, repeating as necessary.
   3. If a stain persists, use a paste of baking soda and water and apply with a soft bristled brush. Light scrubbing for 10 to 20 strokes should remove most stains. Although baking soda is a low abrasive, excessive scrubbing or exerting too much force may damage the decorative surface, especially if it has a gloss finish.
   4. Stubborn stains that resist any of the above cleaning methods may require the use of undiluted household bleach or nail polish remover. Apply the bleach or nail polish remover to the stain and let stand no longer than 2 minutes. Rinse thoroughly with warm water and wipe dry. This step may be repeated if the stain appears to be going away and the color of the laminate has not been affected. WARNING: Prolonged exposure of the laminate surface to bleach will cause discoloration.

b. Abrasives
   1. Abrasive pads, scouring powders, or cleansers may permanently dull and scratch the laminate surface making it susceptible to staining.

c. Harsh chemicals
   1. Harsh chemicals such as oven cleaner, toilet cleaner, or drain cleaner will etch and discolor the decorative surface.
   2. High-pressure decorative laminates are not designed to resist continual contact with these chemicals. If spills of these products occur, remove immediately, rinse thoroughly, and wipe dry.

d. Hot objects
   1. Do not place hot frying pans or dishes directly from the oven or cooktop on the laminate surface. Even though HPDL has high heat resistance, exposure to temperatures greater than 135°C (275°F) is not recommended. As a precaution, protect the surface from heat generating appliances such as pressing irons, toasters, curling irons, and electric slow cookers by using a trivet or insulated pad. Prolonged exposure to temperatures above 65°C (150°F) may result in separation of the laminate from the substrate.

e. Sharp objects
   1. Never use knives or other sharp objects directly on the decorative surface. A chopping block or counter saver is recommended.

f. Impact
   1. Do not abuse the high-pressure decorative laminate by dropping heavy objects such as cans, dinnerware, or glasses or deliberately hammering directly on the surface. Even though high-pressure decorative laminates have excellent impact resistance, chipping or cracking may occur.

Copyright National Electrical Manufacturers Association
Provided by IHS under license with NEMA
No reproduction or networking permitted without license from IHS
Not for Resale

Copyright National Electrical Manufacturers Association
Provided by IHS under license with NEMA
No reproduction or networking permitted without license from IHS
Not for Resale

Annex C
PERCEPTION OF SCRATCHES

High-Pressure Decorative Laminate has long been recognized as a durable high-performance surfacing material. The resistance of the HPDL surface to scratching is an important performance property of the material. Unfortunately, there is a lack of a single adequate method for quantifying this property. Distinguishing the difference between the material property of resistance to producing a given scratch and the aesthetic property of visibility of a scratch (scratch perception) is difficult. Given a set of HPDL with the same physical resistance to scratching, the perception of the scratches is primarily a function of color (lightness, which is measured by the tristimulus Y value, and to some degree hue -- H*), surface features (gloss and texture), and viewing geometry. Generally, darker laminates tend to show scratches more than light ones, higher gloss laminates tend to show scratches more than low gloss ones, and smoother laminates tend to show scratches more than more textured ones.

Several methods for producing scratches on HPDL have been used. The protocol in LD-3 (3.7) for producing scratches on HPDL uses the corner of a glass microscope slide as the scratch tool. The scratch tool is held in a specified geometry relative to the sample. The scratch is made by moving the sample in a straight line while the scratch tool is in contact with the sample surface. Various loads can be applied to the scratch tool to produce differing sizes of scratches. This more closely approximates materials likely to produce scratches in service than other methods. The scratch tool is low cost, has consistent geometry, and is readily available. The viewing geometry is controlled, improving the reproducibility of the scoring of the test samples. The method evaluates the perception of scratches made with various loads. The method does not directly evaluate the ability of a laminate to resist scratching. The difference between the ability of various laminates to resist scratching may be evaluated by this method if color, gloss, and surface texture is the same for the laminates being compared. The method does a good job of evaluating which laminates have a greater tendency to show scratches (scratch perception).

Scratch perception depends on color, pattern, gloss, and texture of the HPDL surface. The perception of a given scratch can be visualized as following a multidimensional response surface. Quantification of this response surface is in progress. Preliminary evaluation of data from a study to evaluate the effects of color lightness, gloss, and texture on scratch perception is reported here.

The effect of color lightness and hue on scratch perception was studied using a set of HPDL samples having similar gloss (10-20) and surface texture (matte texture) from different manufacturers. The samples were solid colors (gray, blue, green, red, and yellow) in a range of lightness values (tristimulus –Y value = 5 to 80). The scratch response as a function of lightness was similar for the various hues and did not differ between manufactures. The relationship of perceivable scratch as a function of the measured Y value is shown in Figure C-1. Scratches are easier to perceive as the surface gets darker (Y value decreases).

The effect of gloss on scratch perception was studied using a set of HPDL samples having similar texture (matte texture), a range of lightness values (tristimulus – Y value = 5 to 80), and a range of gloss values (4 to 115). The samples were solid color gray scale ranging from white to black. The scratch response as a function of lightness (Y value) was determined for each gloss level and is summarized in Figure C-2. Scratches are easier to perceive on surfaces with higher gloss values.

The effect of surface texture on scratch perception was studied using a set of HPDL samples having a range of textures: smooth (mirror finish), low texture (satin or furniture finish), matte texture, and high texture (crystal finish). The samples represented a range of lightness values (tristimulus – Y value = 5 to 80) and a range of gloss values (4 to 115). The samples were solid color gray scale ranging from white to

Copyright National Electrical Manufacturers Association
Provided by IHS under license with NEMA
No reproduction or networking permitted without license from IHS
Not for Resale

black. The scratch response as a function of lightness (Y value) and gloss was determined for each surface texture and are summarized in Figure C-3. Scratches are easier to perceive on smoother, lower textured surfaces.

One attempt to visualize the effects of gloss and lightness on scratch perception is presented in Figure C-4. For any particular level of scratching (higher load gives more severe scratch) the dark areas of the figure represent the portion of the gloss-lightness sample space where scratches produced at that load would be expected to be visible. The lighter shaded areas of the figure represent the portion of the gloss-lightness sample space where scratches produced at that load may be visible. The non-shaded areas of the figure represent the portion of the gloss-lightness sample space where scratches produced at that load would not be expected to be visible. Again, scratches are harder to see on lighter, lower gloss samples.

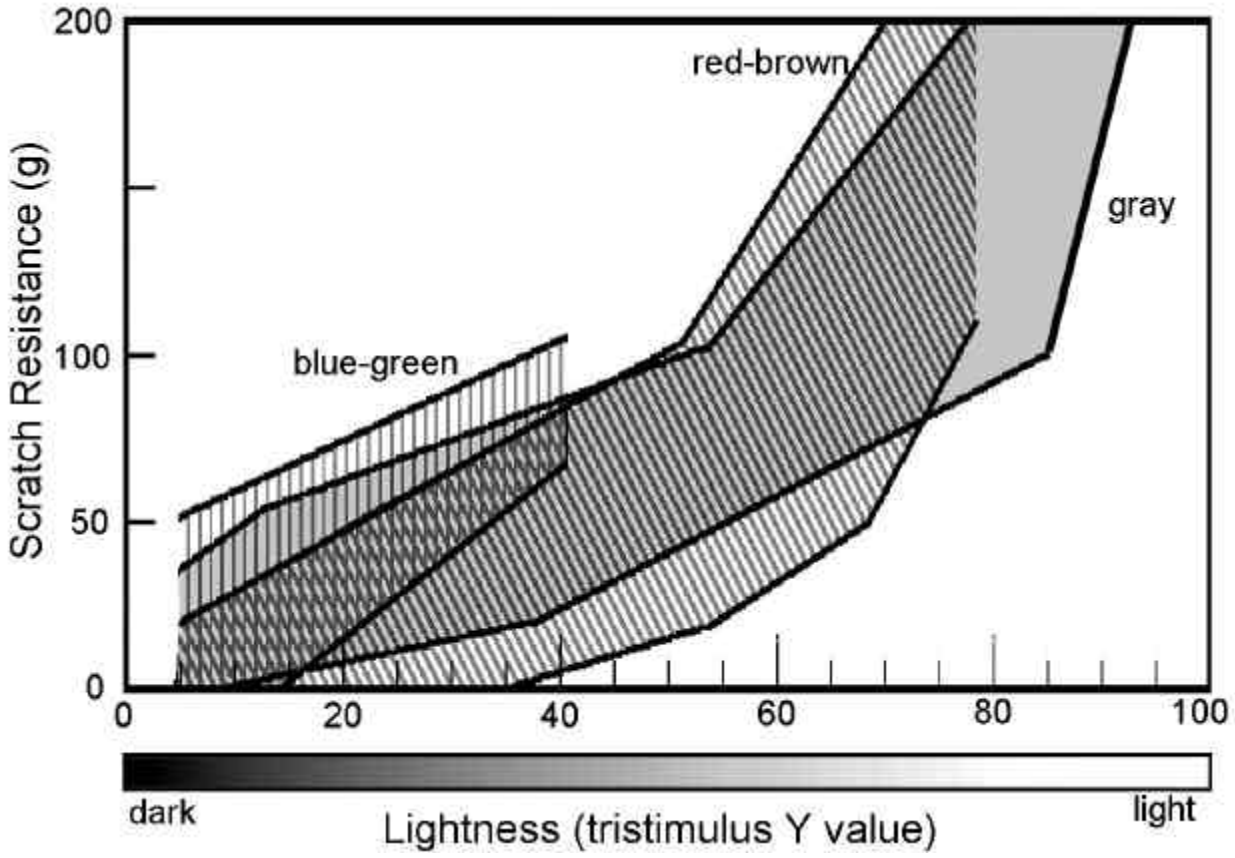

Figure C-1
RELATION OF SCRATCH PERCEPTION TO LIGHTNESS AND HUE OF HPDL

Note—This figure represents scratch perception data from a set of HPDL samples in which hue and lightness varied and gloss and surface texture were held constant. Differences in hue have little or no effect on the perception of scratches on HPDL. Differences in the lightness (tristimulus - Y value) have a noticeable effect on the perception of scratches on HPDL. It is more difficult to see scratches on lighter HPDL.

--`,,`-`-`,,`,,`,`,,`---

Copyright National Electrical Manufacturers Association
Provided by IHS under license with NEMA
No reproduction or networking permitted without license from IHS
Not for Resale

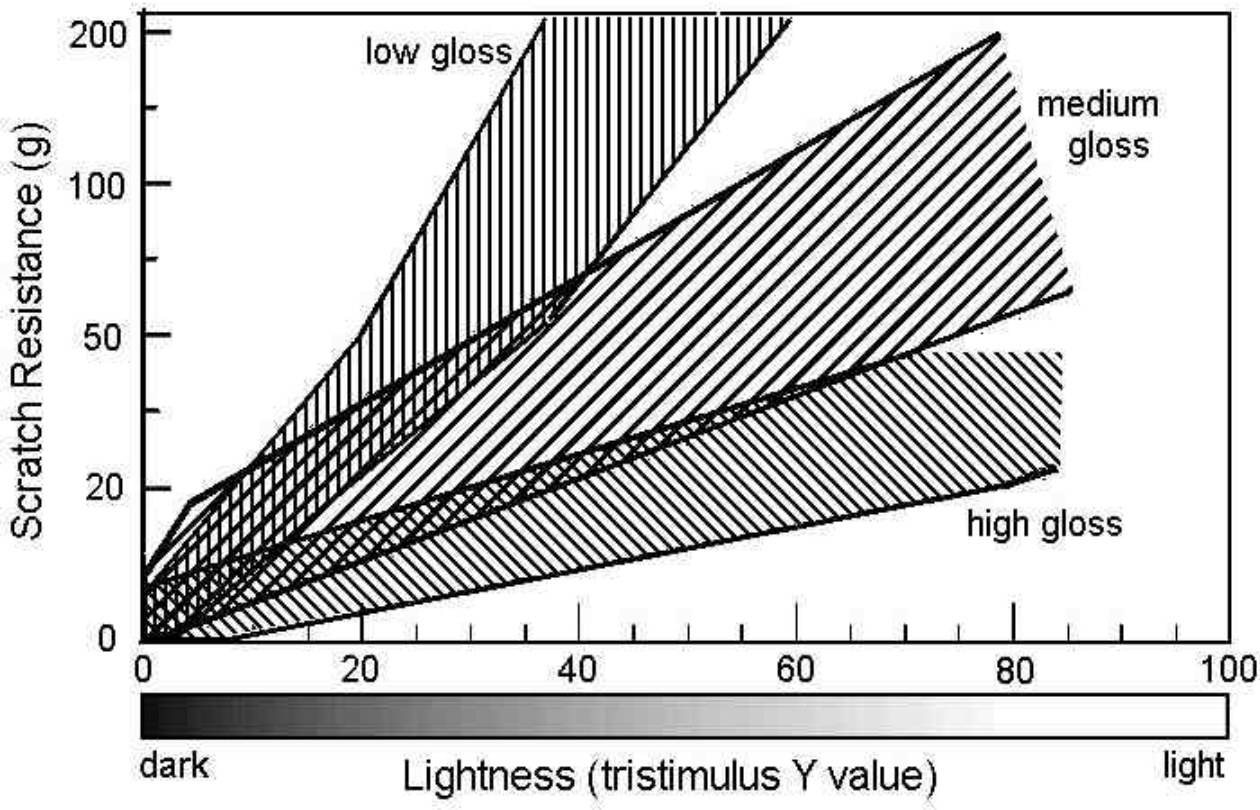

Figure C-2
RELATION OF SCRATCH PERCEPTION TO LIGHTNESS AND GLOSS OF TEXTURED FINISH HPDL

Note—This figure represents scratch perception data from a set of HPDL samples in which gloss and lightness varied and hue (grey) and surface texture (textured finish) were held constant. Differences in lightness (tristimulus - Y value) have a noticeable effect on the perception of scratches on HPDL. It is more difficult to see scratches on lighter HPDL. Differences in the gloss also have an effect on the perception of scratches on HPDL. It is more difficult to see scratches on lower gloss HPDL, and it is easier to see scratches on higher gloss HPDL.

Copyright National Electrical Manufacturers Association
Provided by IHS under license with NEMA
No reproduction or networking permitted without license from IHS
Not for Resale

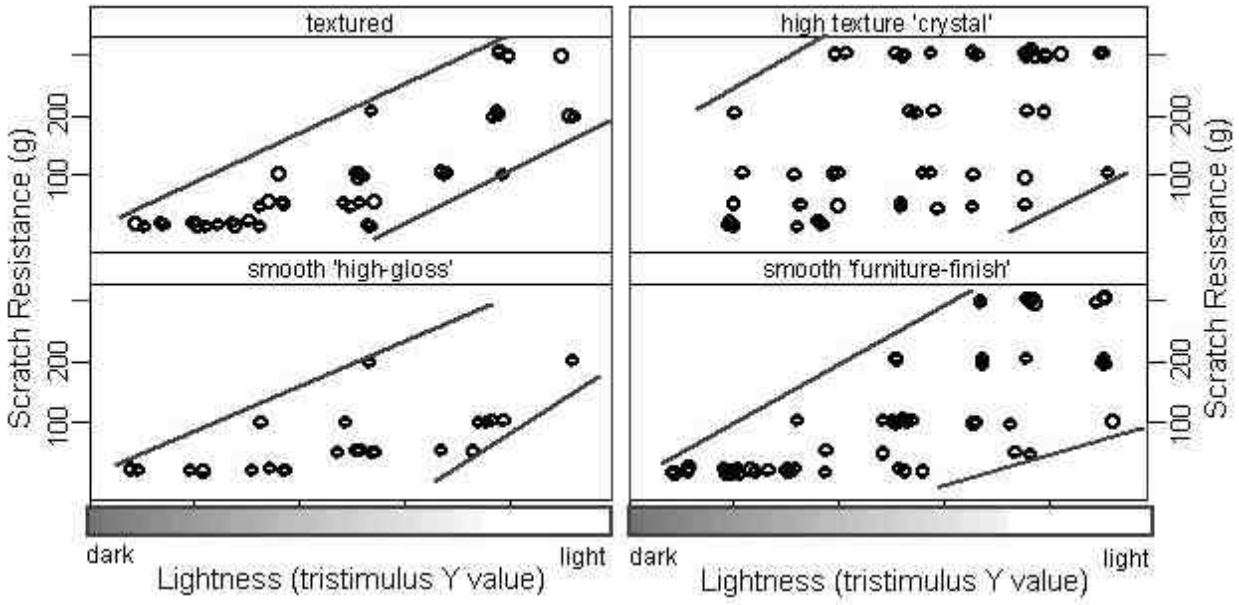

Figure C-3
RELATION OF SCRATCH PERCEPTION TO LIGHTNESS AND TEXTURE OF HPDL

Note—This figure represents scratch perception data from a set of HPDL samples in which texture and lightness varied and hue (grey) was held constant. Differences in lightness (tristimulus - Y value) have a noticeable effect on the perception of scratches on HPDL. It is more difficult to see scratches on lighter HPDL regardless of the surface texture. Differences in surface texture of the HPDL also have an effect on the perception of scratches on HPDL. It is easier to see scratches on smoother (lower texture) HPDL. Very high surface texture (crystal finishes) on HPDL tends to obscure the relationship of lightness and scratch perception.

Copyright National Electrical Manufacturers Association
Provided by IHS under license with NEMA
No reproduction or networking permitted without license from IHS
Not for Resale

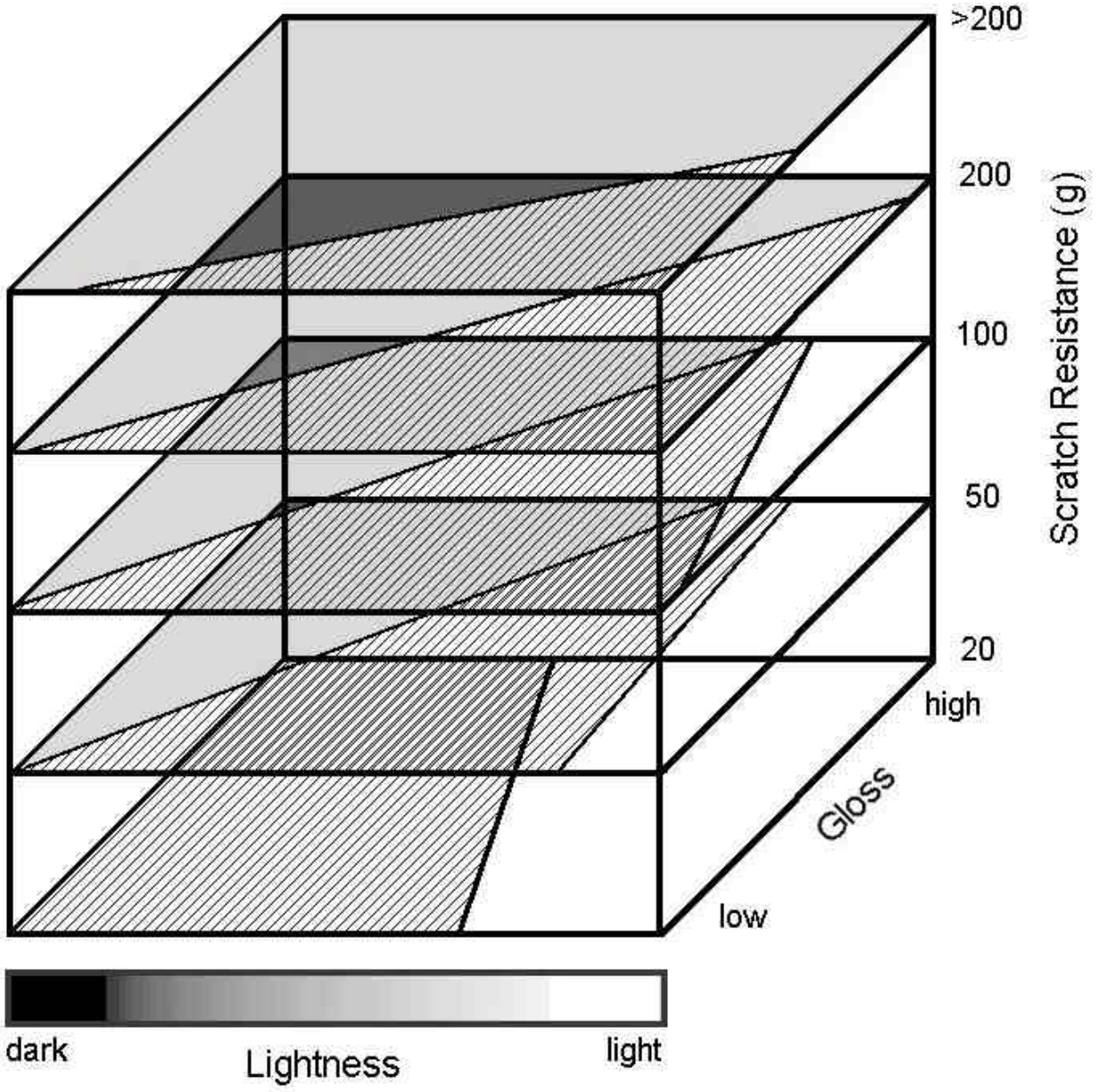

Figure C-4
RELATION OF SCRATCH PERCEPTION TO LIGHTNESS AND GLOSS OF HPDL

Note—This figure represents scratch perception data from a set of HPDL samples in which gloss and lightness were varied. It provides another means of visualizing the relation of scratch perception to lightness (tristimulus - Y value) and gloss of the HPDL. For scratches produced at any particular load (scratch resistance value) the part of the lightness-gloss sample space in which the scratch would always be expected to be seen is shaded dark. The lighter shaded areas represent lightness-gloss combinations in which the scratch would sometimes be seen. The unshaded areas represent lightness-gloss combinations in which the scratch would not be expected to be seen. It is easier to see scratches on darker and higher gloss HPDL.

Copyright National Electrical Manufacturers Association
Provided by IHS under license with NEMA
No reproduction or networking permitted without license from IHS
Not for Resale

--```-`-`,,`,,`,`,,`---

Copyright National Electrical Manufacturers Association
Provided by IHS under license with NEMA
No reproduction or networking permitted without license from IHS

Not for Resale

Annex D
WEAR RESISTANCE CHART

Copyright National Electrical Manufacturers Association
Provided by IHS under license with NEMA
No reproduction or networking permitted without license from IHS
Not for Resale

--`,,`,,`-`-`,,`,,`,`,,`---

Copyright National Electrical Manufacturers Association
Provided by IHS under license with NEMA
No reproduction or networking permitted without license from IHS

Not for Resale

Annex E
SIZE ESTIMATION CHART

--`,,`-`-`,,`,,`,`,,`---

Copyright National Electrical Manufacturers Association
Provided by IHS under license with NEMA
No reproduction or networking permitted without license from IHS

Not for Resale

Copyright National Electrical Manufacturers Association
Provided by IHS under license with NEMA
No reproduction or networking permitted without license from IHS
Not for Resale