NEMA LD*3 95 6470247 0508145 2T8

NEMA STANDARDS PUBLICATION NO. LD 3

nema

High-Pressure Decorative Laminates

NEMA

NATIONAL ELECTRICAL MANUFACTURERS ASSOCIATION ■ 1300 N. 17th Street, Rosslyn, VA 22209

Copyright National Electrical Manufacturers Association
Provided by IHS under license with NEMA
No reproduction or networking permitted without license from IHS
Not for Resale

NEMA Standards Publication LD 3-1995

HIGH-PRESSURE DECORATIVE LAMINATES

(ANSI Approved: October 6, 1995)

Published by

National Electrical Manufacturers Association
1300 N. 17th Street, Suite 1847
Rosslyn, Virginia 22209

703-841-3200

©1995 by National Electrical Manufacturers Association

Copyright National Electrical Manufacturers Association
Provided by IHS under license with NEMA
No reproduction or networking permitted without license from IHS

Not for Resale

TABLE OF CONTENTS

FOREWORD v

Section 1 GENERAL
1.1 Scope 1-1
1.2 Referenced Standards 1-1
1.3 Types and Descriptions 1-1
1.3.1 General Purpose Type 1-2
1.3.2 Postforming Type 1-2
1.3.3 Flame Retardant Type 1-2
1.3.4 High Wear Type 1-2
1.3.5 Specific Purpose Type 1-2
1.3.6 Cabinet Liner Type 1-2
1.3.7 Backer Type 1-2
1.3.8 Other Types 1-2
1.4 Conformance with Food, Drug, and Cosmetics Act 1-2
1.5 Fire Rating 1-3
1.6 Visual Inspection 1-3

Section 2 PERFORMANCE PROPERTIES AND VALUES
2.1 Performance Properties 2-1
2.2 Flatness 2-1
2.3 Surface Finishes 2-1

Section 3 TEST METHODS
3.1 Appearance 3-1
3.1.1 Scope 3-1
3.1.2 Test Apparatus and Materials 3-1
3.1.3 Test Specimens 3-1
3.1.4 Test for Visual Defects 3-1
3.1.5 Test for Flatness 3-1
3.1.6 Test for Broken Corners 3-2
3.1.7 Test for Squareness 3-2
3.1.8 Test for Edge Straightness 3-2
3.1.9 Sanding 3-2
3.1.10 Test Report 3-2
3.2 Surface Finish 3-3
3.2.1 Scope 3-3
3.2.2 Test Apparatus and Materials 3-3
3.2.3 Test Specimens 3-3
3.2.4 Calibration 3-3
3.2.5 Test Procedure 3-3
3.2.6 Test Report 3-3
3.3 Light Resistance 3-4
3.3.1 Scope 3-4
3.3.2 Xenon-Arc Method 3-4
3.3.3 Carbon-Arc Fading Lamp Method 3-6
3.4 Cleanability/Stain 3-7
3.4.1 Scope 3-7

Copyright National Electrical Manufacturers Association
Provided by IHS under license with NEMA
No reproduction or networking permitted without license from IHS
Not for Resale

3.4.2 Test Apparatus and Materials....3-7
3.4.3 Test Specimens....3-7
3.4.4 Test Reagents....3-7
3.4.5 Test Procedure....3-8
3.4.6 Test Report....3-9
3.5 Boiling Water Resistance....3-9
3.5.1 Scope....3-9
3.5.2 Test Apparatus and Materials....3-10
3.5.3 Test Specimens....3-10
3.5.4 Test Procedure....3-10
3.5.5 Factors Influencing the Accuracy of the Test....3-10
3.5.6 Test Report....3-10
3.6 High Temperature Resistance....3-12
3.6.1 Scope....3-12
3.6.2 Test Apparatus and Materials....3-12
3.6.3 Test Specimens....3-12
3.6.4 Test Procedure....3-12
3.6.5 Test Report....3-13
3.7 Linear Glass Scratch Resistance....3-13
3.7.1 Scope....3-13
3.7.2 Test Apparatus and Materials....3-13
3.7.3 Test Specimens....3-18
3.7.4 Calibration of Test Apparatus....3-18
3.7.5 Test Procedure....3-18
3.7.6 Factors Influencing Accuracy of the Test....3-19
3.7.7 Test Report....3-19
3.8 Ball Impact Resistance....3-20
3.8.1 Scope....3-20
3.8.2 Test Apparatus and Materials....3-20
3.8.3 Test Specimens....3-22
3.8.4 Test Procedure....3-22
3.8.5 Factors Influencing the Accuracy of the Test....3-23
3.8.6 Test Report....3-23
3.9 Dart Impact Resistance....3-23
3.9.1 Scope....3-23
3.9.2 Test Apparatus and Materials....3-23
3.9.3 Test Specimens....3-23
3.9.4 Test Procedure....3-23
3.9.5 Calculation....3-25
3.9.6 Test Report....3-25
3.10 Radiant Heat Resistance....3-27
3.10.1 Scope....3-27
3.10.2 Test Apparatus and Materials....3-27
3.10.3 Test Specimens....3-31
3.10.4 Calibration....3-31
3.10.5 Test Procedure....3-31
3.10.6 Factors Influencing the Accuracy of the Test....3-31
3.10.7 Test Report....3-32
3.11 Dimensional Change....3-32
3.11.1 Scope....3-32
3.11.2 Test Apparatus and Materials....3-32
3.11.3 Test Specimens....3-32

Copyright National Electrical Manufacturers Association
Provided by IHS under license with NEMA
No reproduction or networking permitted without license from IHS
Not for Resale

3.11.4 Test Procedure 3-32
3.11.5 Calculation 3-34
3.11.6 Test Report 3-35
3.12 Room Temperature Dimensional Stability 3-35
3.12.1 Scope 3-35
3.12.2 Test Apparatus and Materials 3-35
3.12.3 Test Specimens 3-35
3.12.4 Test Procedure 3-35
3.12.5 Calculation 3-36
3.12.6 Test Report 3-36
3.13 Wear Resistance 3-36
3.13.1 Scope 3-36
3.13.2 Test Apparatus and Materials 3-36
3.13.3 Test Specimens 3-37
3.13.4 Preparation of Test Wheels 3-37
3.13.5 Preparation of Test Apparatus 3-37
3.13.6 Standardization of Abrasive 3-37
3.13.7 Test Procedure 3-38
3.13.8 Calculation 3-38
3.13.9 Factors Influencing the Accuracy of the Test 3-39
3.13.10 Test Report 3-39
3.14 Formability 3-39
3.14.1 Scope 3-39
3.14.2 Test Apparatus and Materials 3-39
3.14.3 Test Specimens 3-42
3.14.4 Calibration 3-42
3.14.5 Test Procedure 3-42
3.14.6 Test Report 3-47
3.15 Blister Resistance 3-47
3.15.1 Scope 3-47
3.15.2 Test Apparatus and Materials 3-47
3.15.3 Test Specimens 3-48
3.15.4 Calibration 3-48
3.15.5 Test Procedure 3-48
3.15.6 Test Report 3-48
3.16 Scuff Resistance 3-48
3.16.1 Scope 3-48
3.16.2 Test Apparatus and Materials 3-49
3.16.3 Test Specimens 3-49
3.16.4 Test Procedure 3-49
3.16.5 Test Report 3-49

Section 4 APPLICATION, FABRICATION, AND INSTALLATION
4.1 Introduction 4-1
4.2 General Discussion 4-1
4.3 Materials 4-2
4.3.1 High-Pressure Decorative Laminate 4-2
4.3.2 Adhesives 4-3
4.3.3 Substrate 4-4
4.3.4 Factors Affecting Bonded Assemblies 4-5
4.4 Conditioning and Storage of Materials Prior to Fabrication 4-6
4.5 Fabrication Tooling 4-7

Copyright National Electrical Manufacturers Association
Provided by IHS under license with NEMA
No reproduction or networking permitted without license from IHS
Not for Resale

4.5.1 Sawing 4-7
4.5.2 Routing 4-9
4.5.3 Sanding 4-9
4.5.4 Drilling 4-9
4.6 General Rules for Fabrication and Installation 4-9
4.6.1 Fabrication in the Shop 4-9
4.6.2 Postforming Laminates 4-12
4.6.3 Installation on the Job 4-12
4.6.4 Field Working of Bonded Assemblies 4-14
4.7 Typical Problems – Causes and Prevention 4-14

Section 5 CARE AND CLEANING OF LAMINATES 5-1

Copyright National Electrical Manufacturers Association
Provided by IHS under license with NEMA
No reproduction or networking permitted without license from IHS
Not for Resale

Foreword

This Standards Publication has been prepared by the Decorative Laminate Section of the National Electrical Manufacturers Association for use by manufacturers and fabricators of high-pressure decorative laminates (HPDL). The test methods and performance values presented have been related as closely as possible to end-use applications, and user needs have been considered throughout.

The purpose of this Standards Publication is to provide standard test methods and performance values for high-pressure decorative laminates.

Standards Publication LD 3-1995 revises and supersedes LD 3-1991.

The Decorative Laminate Section works closely with trade organizations and appropriate government agencies in the periodic review and revision of these standards.

The Section's testing laboratory at North Carolina State University has been instrumental over a period of years in developing new test methods and perfecting old test methods, and also in conducting round robins among producer laboratories to prove the reproducibility of test methods.

These standards are also periodically reviewed by the Decorative Laminate Section for any revisions necessary to keep them up to date with advancing technology. Proposed or recommended revisions should be submitted to:

Vice President, Engineering Department
National Electrical Manufacturers Association
1300 N. 17th Street, Suite 1847
Rosslyn, Virginia 22209

In this 1995 edition of the NEMA Standards Publication for High-Pressure Decorative Laminates, effort has been continued to relate the Standards more closely to the performance expected in their end-use applications. The type and thickness of the decorative laminate, the substrate, the adhesive, and the fabricating techniques employed have a definite bearing on the performance of the final product in service. Information on substrates, adhesives, fabrication, and installation has been updated and is found in Section 4. Information concerning care and cleaning of high-pressure decorative laminate (HPDL) is found in Section 5.

Metric values for the test procedures and performance standards are included. Where values are given in both metric and U. S. customary units, the U. S. customary units are to be regarded as the standard.

Copyright National Electrical Manufacturers Association
Provided by IHS under license with NEMA
No reproduction or networking permitted without license from IHS
Not for Resale

Copyright National Electrical Manufacturers Association
Provided by IHS under license with NEMA
No reproduction or networking permitted without license from IHS

Not for Resale

Section 1
GENERAL

1.1 SCOPE

This Standards Publication covers high-pressure decorative laminate (HPDL) sheets which consist of papers, fabrics, or other core materials that have been laminated at pressures of more than 5.17 MPa (750 psi) using thermosetting condensation resins as binders.

1.2 REFERENCED STANDARDS

In this publication, reference is made to the standards listed below. Copies are available from the indicated sources:

American Society for Testing and Materials
1916 Race Street
Philadelphia, PA 19103-1187

D 523 89	*Test Method for Specular Gloss*
G 26 90	*Standard Practice for Operating Light-Exposure Apparatus (Xenon-Arc Type) With and Without Water for Exposure of Nonmetallic Materials*

International Organization for Standardization
1, Rue de Varembe
Case Postale 56
CH-1211 Geneva, Switzerland

ISO/DIS 4586-1	*High-pressure decorative laminates (HPDL)-sheets made from thermosetting resins*

National Electrical Manufacturers Association
1300 N. 17th Street
Rosslyn, Virginia 22209

LI 1-1989	*Industrial Laminated Thermosetting Products*

Technical Association of the Pulp & Paper Industry
Technology Park
P. O. Box 105113
Atlanta, GA 30348-5113

Standards T-213-1989	*Dirt in Pulp*
Standards T-437-1990	*Dirt in Paper and Paperboard*

1.3 TYPES AND DESCRIPTIONS

The following types and descriptions of high-pressure decorative laminate (HPDL) are covered by these standards. The backs of the sheets shall be sanded or otherwise prepared to be suitable for bonding with adhesives to a base material for mechanical support.

Copyright National Electrical Manufacturers Association
Provided by IHS under license with NEMA
No reproduction or networking permitted without license from IHS

Not for Resale

1.3.1 General Purpose Type

General purpose type is a high-pressure decorative laminate (HPDL) designed for both horizontal and vertical applications where appearance, durability, resistance to stains, and resistance to heat up to 135°C (275°F) are required.

1.3.2 Postforming Type

Postforming type is a high-pressure decorative laminate (HPDL) similar to the general-purpose type but is capable of being thermoformed under controlled temperature and pressure in accordance with the laminate manufacturer's recommendations.

1.3.3 Flame Retardant Type

Flame retardant type laminate is a high-pressure decorative laminate (HPDL) capable of providing flame retardant characteristics as determined by test methods required by the authority having jurisdiction.

1.3.4 High Wear Type

High wear type laminate is a general purpose high-pressure decorative laminate (HPDL) with increased surface wear resistance.

1.3.5 Specific Purpose Type

Specific purpose type is a general purpose high-pressure decorative laminate (HPDL) with increased thickness.

1.3.6 Cabinet Liner Type

Cabinet liner type is a high-pressure decorative laminate (HPDL) intended only for use in cabinet interiors.

1.3.7 Backer Type

Backer type laminate is a high-pressure decorative laminate (HPDL) without a decorative face intended for use as a balancing sheet in panel construction.

1.3.8 Other Types

Various decorative effects have been developed which meet specific aesthetic requirements. These laminates may have special visual appeal, such as gloss finish, deeply embossed textures, and metallic surfaces. They are designed for specific installations and may not be suitable for all applications. For this reason, they are not included in these standards. Information concerning their proper application, properties, and care should be requested from the manufacturer.

1.4 CONFORMANCE WITH FOOD, DRUG, AND COSMETICS ACT

Section 175.300 of the Code of Federal Regulations, Title 21, April 1, 1993, sets forth those resinous and polymeric coatings which may, when used in accordance with the conditions prescribed in that Section, be safely used as food contact surfaces.

Section 175.300 should be consulted to determine which resins commonly used in the manufacture of decorative laminates are safe for use as food contact surfaces.

Copyright National Electrical Manufacturers Association
Provided by IHS under license with NEMA
No reproduction or networking permitted without license from IHS
Not for Resale

1.5 FIRE RATING

These standards do not specify the fire rating characteristics of individual products. These products are measured and reported in accordance with the procedures established by code-specifying agencies, such as the National Fire Protection Association, Building Officials Conference of America, and other local, state, and federal code agencies. The manufacturer should be consulted for a specific fire rating.

High-pressure decorative laminates are surfacing materials which are usually combined with substrate materials. Therefore, the fire rating data should be developed by testing the combined laminate, adhesive, and substrate, and the manufacturer should be consulted.

1.6 VISUAL INSPECTION

The inspector shall have normal vision, corrected if necessary. No magnification shall be used when viewing the specimens.

Copyright National Electrical Manufacturers Association
Provided by IHS under license with NEMA
No reproduction or networking permitted without license from IHS
Not for Resale

Copyright National Electrical Manufacturers Association
Provided by IHS under license with NEMA
No reproduction or networking permitted without license from IHS

Not for Resale

Section 2
PERFORMANCE PROPERTIES AND VALUES

2.1 PERFORMANCE PROPERTIES

The performance properties and values shall be as shown in Table 2-3.

2.2 FLATNESS

Laminates stored in recommended conditions shall not show departure from the flat surface on which it is placed of more than the limits listed in Table 2-1. The method for determining flatness is described in Section 3.1.5.

Table 2-1
PERMITTED DEPARTURE FROM FLATNESS

Thickness t	Maximum Warp
t < 2.0 mm	±120 mm
(t < 0.08 in)	(±4.7 in)
2.0 mm ≤ t < 5.0 mm	± 50 mm
(0.08 ≤ t < 0.2 in)	(± 2.0 in)

2.3 SURFACE FINISHES

High-pressure decorative laminates (HPDL) shall have finishes which impart various degrees of gloss to the surface. The gloss levels of satin, furniture, high gloss, and textured finish laminates shall be measured in accordance with Section 3.2 and shall be within the values of Table 2-2.

Table 2-2
SURFACE FINISHES

Machine Direction	Cross-Machine Direction	Finish
1–20	1–20	Textured finish, low gloss
15–34	5–19	Satin finish
21–45	21–45	Textured finish, high gloss
35–60	21–35	Furniture finish
70–100+	70–100+	High gloss finish

Laminates are normally sanded in the machine direction. Higher gloss readings and pattern direction do not necessarily indicate machine direction.

Other finishes are available, but because of the nature of the surface texture, no standard test method has yet been developed which adequately characterizes these surfaces.

Copyright National Electrical Manufacturers Association
Provided by IHS under license with NEMA
No reproduction or networking permitted without license from IHS
Not for Resale

Table 2-3
PERFORMANCE PROPERTIES CHART

			General Purpose				Post-Forming		Flame Retardant		
	Property	**Units**	**HGS**	**HGL**	**VGS****	**VGL****	**HGP**	**VGP****	**SGF‡†**	**HGF†**	**VGF†**
	Nominal Thickness	**mm (In.)**	1.2 (0.048)	1.0 (0.039)	0.7 (0.028)	0.5 (0.020)	1.0 (0.039)	0.7 (0.028)	1.5 (0.059)	1.2 (0.048)	0.8 (0.032)
LD 3 Test Method	**Thickness Tolerance**	**mm (In.)**	±0.12 (±0.005)	±0.12 (±0.005)	0.10 (±0.004)	±0.10 (±0.004)	±0.12 (±0.005)	±0.10 (±0.004)	±0.12 (±0.005)	±0.12 (±0.005)	±0.12 (±0.005)
3.1	Appearance		See Section 3.1 and Table 2-1 for Requirements								
3.2	Surface Finish		See Table 2-2								
3.3	Light Resistance††	Rating,* Min.	SL	SL	SL	SL	SL	SL	SL	SL	SL
3.4	Cleanability	Rating,* Max.	20	20	20	20	20	20	20	20	20
	Stain 1 – 10	Rating,* Min.	NE	NE	NE	NE	NE	NE	NE	NE	NE
	Stain 11 – 15	Rating,* Min.	M	M	M	M	M	M	M	M	M
3.5	Boiling Water Resistance	Rating,* Min.	NE	NE	NE	NE	SL	SL	NE	NE	NE
3.6	High Temperature Resistance	Rating,* Min.	SL	SL	SL	SL	SL	SL	SL	SL	SL
3.7	Linear Glass Scratch Resistance		See Chart 3-1 of Section 3.7.8								
3.8	Ball Impact Resistance	mm (In.) Min.	1270 (50)	889 (35)	508 (20)	381 (15)	762 (30)	508 (20)	1397 (55)	1143 (45)	508 (20)
3.9	Dart Impact Resistance	Joules	Values Under Consideration								
3.10	Radiant Heat Resistance	Sec., Min.	125	100	80	60	100	80	125	75	50
3.11	Dimensional Change	% MD, Max.	0.5	0.6	0.7	0.8	1.1	1.1	0.5	0.5	0.7
		% CD, Max.	0.9	1.0	1.2	1.3	1.4	1.4	0.9	0.9	1.2
3.12	Room Temperature Dimensional Stability	% MD, Max.	0.5	‡‡	0.6	‡‡	1.0	1.0	‡‡	‡‡	‡‡
		% CD, Max.	0.8	‡‡	1.1	‡‡	1.3	1.3	‡‡	‡‡	‡‡
3.13	Wear Resistance	Cycles, Min.	400	400	400	400	400	400	400	400	400
3.14	Formability	mm (In) Radius, Min.	. . .	. . .	. . .	. . .	16 (5/8)	13 (1/2)	. . .	. . .	. . .
3.15	Blister Resistance	Sec., Min.	. . .	. . .	. . .	. . .	55	40	. . .	. . .	. . .
3.16	Scuff Resistance	Rating,* Min.	. . .	. . .	. . .	. . .	. . .	. . .	. . .	. . .	. . .

Table continued, next page

Copyright National Electrical Manufacturers Association
Provided by IHS under license with NEMA
No reproduction or networking permitted without license from IHS
Not for Resale

Table 2-3
PERFORMANCE PROPERTIES CHART (continued)

			High Wear			Specific Purpose		Cabinet Liner	Backer			
	Property	Units	HWH	HWM	HDS	HSH‡	HSM‡	CLS	BKH‡	BKM‡	BKV‡	BKL‡
	Nominal Thickness	mm (In.)	3.0 (0.118)	2.0 (0.079)	1.5 (0.059)	3.0 (0.118)	1.5 (0.059)	0.5 (0.020)	1.2 (0.048)	1.0 (0.039)	0.7 (0.028)	0.5 (0.020)
LD 3 Test Method	Thickness Tolerance	mm (In.)	±0.20 (±0.008)	±0.20 (±0.008)	±0.12 (±0.005)	±0.20 (±0.008)	±0.12 (±0.005)	±0.10 (±0.004)	±0.12 (±0.005)	±0.12 (±0.005)	±0.10 (±0.004)	±0.10 (±0.004)
3.1	Appearance		See Section 3.1 and Table 2-1 for Requirements					...	...	...	...	...
3.2	Surface Finish		See Table 2-2						...	...	...	...
3.3	Light Resistance††	Rating,* Min.	SL	SL	SL	SL	SL	M	...	...	...	...
3.4	Cleanability	Rating,* Max.	20	20	20	20	20	20	...	...	...	...
	Stain 1 – 11	Rating,* Min.	NE	NE	NE	NE	NE	M	...	...	...	...
	Stain 12 – 15	Rating,* Min.	M	M	M	M	M	M	...	...	...	...
3.5	Boiling Water Resistance	Rating,* Min.	NE	NE	NE	NE	NE	M	...	...	...	...
3.6	High Temperature Resistance	Rating,* Min.	SL	SL	SL	SL	SL	M	...	...	...	...
3.7	Linear Glass Scratch Resistance		See Chart 3-1 of Section 3.7.8						...	...	...	...
3.8	Ball Impact Resistance	mm (In.) Min.	1905 (75)	1016 (40)	889 (35)	1905 (75)	1397 (55)	254 (10)	...	...	...	...
3.9	Dart Impact Resistance	Joules	Values Under Consideration						...	...	...	...
3.10	Radiant Heat Resistance	Sec., Min.	200	175	150	200	150	...	...	...	...	...
3.11	Dimensional Change	% MD, Max.	0.3	0.4	0.5	0.3	0.5	1.2	...	...	...	...
		% CD, Max.	0.7	0.8	0.9	0.7	0.9	2.0	...	...	...	...
3.12	Room Temperature Dimensional Stability	% MD, Max.	‡‡	‡‡	‡‡	‡‡	‡‡	‡‡	...	...	...	...
		% CD, Max.	‡‡	‡‡	‡‡	‡‡	‡‡	‡‡	...	...	...	...
3.13	Wear Resistance	Cycles, Min.	3000	3000	3000	400	400	50	...	...	...	...
3.14	Formability	mm (In) Radius, Min.	...	...	...	...	...	...	...	...	...	...
3.15	Blister Resistance	Sec., Min.	...	...	...	...	...	...	...	...	...	...
3.16	Scuff Resistance	Rating,* Min.	NE	NE	NE	...	...	...	...	...	...	...

* Rating System: NE-No effect, SL-Slight effect, M-Moderate effect, S-Severe effect.

** Not recommended for all applications; consult the manufacturer for recommended uses.

† Consult the manufacturer for specific fire rating properties since these NEMA Standards do not specify such properties. (See 1.5).

†† Environmental regulations have caused certain colors to be subject to fugitive changes in appearance and the manufacturer should be consulted.

‡ Not currently ISO designated, but patterned after that system.

‡‡ Values under consideration

Copyright National Electrical Manufacturers Association
Provided by IHS under license with NEMA
No reproduction or networking permitted without license from IHS

Not for Resale

Copyright National Electrical Manufacturers Association
Provided by IHS under license with NEMA
No reproduction or networking permitted without license from IHS

Not for Resale

Section 3
TEST METHODS

3.1 APPEARANCE

3.1.1 Scope

This test measures the visual and dimensional quality of high-pressure decorative laminate (HPDL).

3.1.2 Test Apparatus and Materials

The test apparatus and materials shall include:

a) Flat level horizontal surface (bench or table) approximately 750 to 900 mm (30 inches) high

b) Overhead white fluorescent lights with bulb(s) positioned parallel to the line of sight and providing an intensity of 800 to 1100 lux (75 to 100 foot-candles) on the specimen surface

c) Dirt estimation chart based on TAPPI Standards T-213 and T-437

d) Tape measure capable of measuring to 1 mm (1/32 in) accuracy

e) 1 meter (≈1 yard) straight edge

f) Commercially available non-abrasive cleaner containing 4% butyl cellosolve

3.1.3 Test Specimens

The test specimen shall be an entire sheet.

3.1.4 Test for Visual Defects

a) Place the test specimen on the horizontal support. The surface shall be cleaned with the cleaning solution and allowed to dry.

b) Examine the test specimen by viewing it at an eye to specimen distance of approximately 750 to 900 mm (30 to 36 inches) and at an angle of approximately 45° to 75° from the horizontal (table surface). The specimen shall be rotated in the plane of the table and viewed from all directions. Direct sunlight or other angle light sources, which will accentuate or minimize the effect, shall be avoided.

c) Inspect the specimen for the following defects:

1) Type A defects—Smudges, smears, fingerprints, or streaks

2) Type B defects—any foreign particle which has an area of 0.60 mm^2 or larger and which is visible at the viewing distance

3) Type C defects—any group of three or more foreign particles, each having an area of 0.30 mm^2 or more, which occur within a 300 mm (≈12 inch) diameter circle and which are visible at the viewing distance. If only two foreign particles occur within the prescribed circle, each particle shall be judged separately according to the criteria for Type B defects

4) Test specimens shall not have any A, B, or C defects

3.1.5 Test for Flatness

The maximum allowed warpage shown in Table 2-1 is based on laminates that have been stored at a temperature of 23° ± 2°C (73.4° ± 3.6°F) and a relative humidity of 50 ± 5 percent. Measurement shall be made by laying the sheet concave side up on a flat level surface and measuring greatest point of deflection from the surface. For descriptive purposes the measured value shall be reported as negative if the sheet is measured sanded side up and positive if measured with the decorative side up. Laminates

Copyright National Electrical Manufacturers Association
Provided by IHS under license with NEMA
No reproduction or networking permitted without license from IHS
Not for Resale

stored in recommended conditions shall not show departure from the flat surface of more than the limits listed in Table 2-1.

The accuracy of the measurement will depend on the relative flatness of the surface upon which the laminate is placed.

3.1.6 Test for Broken Corners

One broken corner of 25 mm (≈1.0 inch) or less or two broken corners of 13 mm (≈0.5 inch) are allowed. The measurement shall be the distance between the fracture line and the original corner.

3.1.7 Test for Squareness

A full size sheet of laminate shall be square to within 6 mm (≈0.25 in.) when comparing cross corner to cross corner measurements. See Figure 3-1.

Example: $|L1 - L2| \leq 6$ mm (0.25 in.)

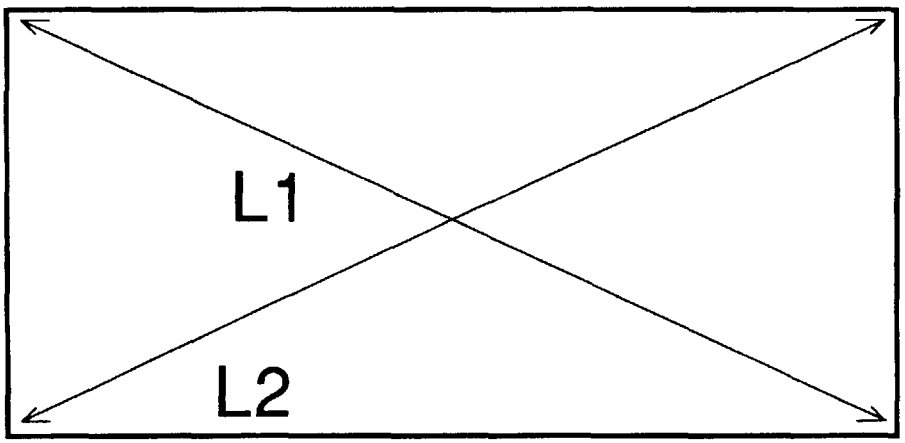

Figure 3-1
SQUARENESS

3.1.8 Test for Edge Straightness

All edges shall be straight with a tolerance of 1.5 mm (0.06 in.) per meter of edge length. The measurement shall be made by placing the 1 meter long straight edge along the edge of the laminate and measuring the greatest deviation from the laminate edge to the straight edge. Edges less than 1 meter in length shall not be measured.

3.1.9 Sanding

Slight chatter marks may be present due to limitations of available sanding equipment.

3.1.10 Test Report

The test report shall list all Type A, B, and C defects and pass/fail criteria of sections 3.1.5 through 3.1.8.

Copyright National Electrical Manufacturers Association
Provided by IHS under license with NEMA
No reproduction or networking permitted without license from IHS
Not for Resale

3.2 SURFACE FINISH

3.2.1 Scope

This test measures the gloss level of high-pressure decorative laminate (HPDL).

Gloss should not be confused with reflectance or apparent reflectance. Gloss is determined by the smoothness of the surface and is measured by the amount of light which is reflected when the angle of incidence is equal to the angle of reflection. Reflectance is the ratio of the total quantity of light reflected from a surface to the total quantity of incident light on the surface.

Reflectance is determined by color and shading of the opaque laminate and is independent of surface finish. Apparent reflectance, of which gloss is a special kind, refers to a specified condition of view or reflection.

3.2.2 Test Apparatus and Materials

The test apparatus and materials shall include:

a) Portable 60° gloss meter

b) Black glass high-gloss standard with a rating of 94 ± 1 unit

c) The test apparatus shall be in accordance with ASTM D 523 with the exception that the primary working standard shall have a value of 94 ± 1 unit

d) A clean, soft, white cloth

3.2.3 Test Specimens

Test specimens shall be at least 150 x 150 mm (6 x 6 inches) x thickness. They shall represent, if possible, the four corners and the geometric center of the full-size production sheet. The test specimens shall not be conditioned prior to the test.

3.2.4 Calibration

The gloss meter shall be calibrated per the manufacturer's instructions.

Gloss meters which have been manufactured to electronically calibrate to ASTM D 523 may be used to determine the gloss level of high-pressure decorative laminates (HPDL).

3.2.5 Test Procedure

a) Wipe the specimen with a clean, soft, white cloth.

b) Place the calibrated gloss meter on the first sample in the machine direction of the laminate, aligning the opening in the bottom of the instrument with the center of the test area. Take and record the gloss meter reading.

c) Place the calibrated gloss meter on the first sample in the cross-machine direction of the laminate, aligning the opening in the bottom of the instrument with the center of the test area. Take and record the gloss meter reading.

d) Repeat steps 1 and 2 for all other test areas of full-sized panels or individual test specimens.

3.2.6 Test Report

The test report shall include:

a) The average of all readings taken in the machine direction

b) The average of all readings taken in the cross-machine direction

Copyright National Electrical Manufacturers Association
Provided by IHS under license with NEMA
No reproduction or networking permitted without license from IHS
Not for Resale

3.3 LIGHT RESISTANCE

The xenon-arc or the carbon-arc fading lamp method shall be used for this test.

3.3.1 Scope

These tests measure the ability of high-pressure decorative laminate (HPDL) to retain its color when exposed to a light source having a frequency range approximating sunlight through window glass.

It is not intended to show the resistance to continuous exposure to outdoor weathering conditions.

3.3.2 Xenon Arc Method

3.3.2.1 Test Apparatus and Materials

The test apparatus shall include:

a) A suitable commercial xenon gas arc discharge light source capable of providing radiant energy closely approximating sunlight with a spectral bandpass of 280 to 800 nm with appropriate filtering to simulate light energy through a window. The equipment shall conform to ASTM G 26 90.

b) The test apparatus shall be capable of maintaining the following parameters within the range specified:

1) Black panel temp ±3°C(±5°F)
2) Dry bulb temp ±3°C(±5°F)
3) Wet bulb temp ±1°C(±2°F)
4) Conditioning water ±3°C(±5°F)
5) Duration of exposure ±1% of cycle time
6) Automatic stepping of power to the light source to maintain steady irradiance levels and accommodate aging effect of xenon burners and solarization of filters.
7) Calibration at 420 nm

c) Specimen holder racks capable of maintaining equal radial distance from the center of the light source and revolving around the light source so as to provide equal radiant exposure

d) Overhead white fluorescent lights with bulb(s) positioned parallel to the line of sight and providing an intensity of 800 to 1100 lux (75 to 100 foot-candles) on the specimen surface

e) White petroleum jelly

3.3.2.2 Test Specimens

The test specimen shall be of the size required by the test apparatus (3.3.2.1) used. The long dimension of the specimen shall be in the machine direction. The test specimen shall be conditioned for at least 48 hours prior to the test at a temperature of 23° ± 2°C (73.4° ± 3°F) and at a relative humidity of 50 ± 5 percent.

3.3.2.3 Test Procedure

a) Mount the test specimen in a masking holder so that approximately one-half of the specimen shall be exposed to the light source, the other half being covered by the masked holder.

Copyright National Electrical Manufacturers Association
Provided by IHS under license with NEMA
No reproduction or networking permitted without license from IHS
Not for Resale

b) Maintain as set points the following conditions:

1)	Black Panel Temp.	70°C (158°F)
2)	Dry Bulb Temp.*	50°C (122°F)
3)	Wet Bulb Temp. to maintain 50% (± 5%) Relative Humidity	39°C (102°F)
4)	Conditioning Water	20°C (68°F)

*The black panel temperature is the primary controlled temperature and the dry bulb temperature is actually under secondary control.

c) Expose the specimens to the light source at a rate of irradiance of 1.10 ± .03 W/m^2. The total irradiance per test cycle shall be 279.0 ± 2.0 kJ/m^2 and shall be accomplished in a period of 72 ± 2 hours.

d) At the conclusion of the exposure period, remove the test specimen from the masking holder and allow it to condition at ambient room temperature for a period of 24 hours.

e) Examine the conditioned specimen within 4 hours by placing it, without preinspection, on a table and then viewing it at an eye-to-specimen distance of approximately 750 to 900 mm (30 to 36 inches) and at an angle of approximately 45° to 75° from the horizontal plane (table surface). The specimen shall be rotated in the horizontal plane and viewed from all directions. Direct sunlight and/or other angle light sources which can accentuate or minimize the effects, shall be avoided.

If a difference in appearance occurs between the exposed and unexposed areas of the test specimen, coat the specimen with a thin film of white petroleum jelly and reexamine it. If the difference persists, report the difference as a color change; if it disappears, report it as a change in surface finish.

3.3.2.4 Factors Influencing the Accuracy of the Test

a) The black panel thermometer should be mounted at the same distance from the light source as the samples. The black coating should be such as to report as accurate as possible the black body temperature of the panel.

b) All test parameters should be maintained as closely as possible to the set-point.

c) The manufacturer's recommendations for calibrations, maintenance, and filter changes should be adhered to stringently.

d) All sample locations should be filled during the test cycle utilizing blanks as necessary in order to maintain correct air-flow through the test chamber.

3.3.2.5 Test Report

The light resistance shall be reported as one of the following:

a) No effect—no change in color or surface finish

b) Slight effect—a change in color or surface finish visible only at certain angles and directions

c) Moderate effect—a change in color or surface finish visible at all angles and directions but does not notably alter the original condition of the specimen

d) Severe effect—a change in color or surface finish which markedly alters the original condition of the specimen

The report shall include the test apparatus utilized.

Copyright National Electrical Manufacturers Association
Provided by IHS under license with NEMA
No reproduction or networking permitted without license from IHS
Not for Resale

3.3.3 Carbon-Arc Fading Lamp Method

3.3.3.1 Test Apparatus and Materials

The test apparatus shall include a suitable commercial carbon-arc fading lamp whose dosage of radiant energy emitted shall be such that it will produce a condition approximating sunlight.

a) Specimen supports of the cylindrical framework type for mounting the test specimens perpendicular to and at a fixed radial distance from the center of the light source.

b) Ventilating fan capable of maintaining the black-panel temperature at 63° ± 3°C (145.4° ± 5.4°F). This ventilating fan shall be an integral part of the light source apparatus.

c) Black-panel thermometer—A temperature sensing unit which can be mounted in the position of a test specimen to determine the black body temperature at the specimen to light source distance.

d) Overhead white fluorescent lights with bulb(s) positioned parallel to the line of sight, and providing an intensity of 800 to 1100 lux (75 to 100-foot candles) on the specimen surface.

e) White petroleum jelly.

3.3.3.2 Test Specimens

The test specimen shall be of the size required by the test apparatus (3.3.3.1) used. The test specimen shall be conditioned for at least 48 hours prior to the test at a temperature of 23° ± 2°C (73.4° ± 3°F) and at a relative humidity of 50 ± 5 percent.

3.3.3.3 Test Procedure

a) Mount the test specimen in a masking holder so that approximately one-half of the specimen will be exposed to the light source, the other half being covered by the masked holder.

b) Expose the mounted specimen to the light source for 48 hours.

c) Maintain the temperature of the air surrounding the test specimen at 63° ± 3°C (145.4° ± 5.4°F).

d) At the conclusion of the exposure period, remove the test specimen from the masking holder and allow to condition at ambient room temperature for 24 hours.

e) Examine the conditioned specimen within 4 hours by placing it, without pre inspection, on a table and then viewing it at an eye-to-specimen distance of approximately 750 to 900 mm (30 to 36 inches) and at an angle of approximately 45° to 75° from the horizontal plane (table surface). The specimen shall be rotated in the plane of the table and viewed from all directions. Direct sunlight or other angle light sources, which can accentuate or minimize the effect, shall be avoided.

If a difference in appearance occurs between the masked and exposed areas of the test specimen, coat the specimen with a thin uniform film of white petroleum jelly and re-examine it. If the difference persists, report it as a color change; if it disappears, report it as a change in surface finish.

3.3.3.4 Factors Influencing the Accuracy of the Test

a) The thermometer should be mounted on a black panel to obtain the correct temperature reading.

b) The humidity on the unit should be as constant as possible.

c) All specimen holders should be filled with test specimens or blanks to ensure that the same air flow conditions exist for each testing period.

3.3.3.5 Test Report

The light resistance shall be reported as one of the following:

a) No effect—no change in color or surface finish

b) Slight effect—a change in color or surface finish visible only at certain angles and directions

Copyright National Electrical Manufacturers Association
Provided by IHS under license with NEMA
No reproduction or networking permitted without license from IHS
Not for Resale

c) Moderate effect—a change in color or surface finish visible at all angles and directions but does not notably alter the original condition of the specimen

d) Severe effect—a change in color or surface finish which markedly alters the original condition of the specimen

The report shall include the test apparatus utilized.

Environmental regulations have caused certain colors to be subject to fugitive changes in appearance and the manufacturer should be consulted.

3.4 CLEANABILITY/STAIN

3.4.1 Scope

This test measures both the ease of cleanability and stain resistance of high-pressure decorative laminate (HPDL) by common household substances.

3.4.2 Test Apparatus and Materials

The test apparatus and materials shall include:

a) Concave glass covers, one for each test reagent, requiring a cover, having flat fire-polished rims, 25 mm (1 inch) in diameter

b) Commercially available non-abrasive cleaner containing 4% butyl cellosolve

c) A 5 ± 0.5 percent solution of sodium hypochlorite (bleach solution)

d) Baking soda(a mild abrasive household cleaner)

e) A clean, soft, white cloth

f) A stiff nylon bristle brush, such as a nail brush

g) Cotton balls

h) Cellulose sponge 75 x 100 x 50 mm (3 x 4 x 2 inch)

i) Overhead white fluorescent lights with bulb(s) positioned parallel to the line of sight and providing an intensity of 800 to 1100 lux (75 to 100 foot-candles) on the specimen surface

j) Tap water

k) Non-oily nail polish remover

l) 1 kilogram mass

3.4.3 Test Specimens

The test specimen shall have an area sufficient to permit placing all 15 of the test reagents on its surface in two lines. Individual stains shall be placed about 50 mm (2 inches) apart. A 100 x 400 mm (4 x 16 inch) specimen is adequate.

3.4.4 Test Reagents

Reagents shall be kept in closed containers to avoid change in concentration. Perishable food items shall be kept refrigerated.

a) Distilled water

b) A 50:50 volume solution of SD-3A ethyl alcohol and water

c) Acetone

d) Household ammonia (non-sudsing)

e) Citric acid solution (water containing 10 percent citric acid)

Copyright National Electrical Manufacturers Association
Provided by IHS under license with NEMA
No reproduction or networking permitted without license from IHS
Not for Resale

f) Vegetable cooking oil
g) Freshly prepared coffee (one teaspoon of instant coffee per 6 ounces of water)
h) Freshly prepared tea (brew 1 tea bag per 4 ounces of boiling water for 2 minutes)
i) Tomato catsup
j) Plain prepared yellow mustard
k) Povidone iodine (10%)
l) Supermarket stamp ink—purple
m) #2 pencil*
n) Wax crayon (black or other contrasting color)*
o) Shoe polish (black paste)

*No need to cover these items.

3.4.5 Test Procedure

a) Using the commercial cleaner and water, clean the surface of the test specimen with a clean, soft, white cloth. Rinse the specimen thoroughly and dry using another clean, soft, white cloth. Allow to dry completely at a temperature of 23° ± 2°C (73.4° ± 3.6°F).
b) Position the test specimen on a flat, level, horizontal, surface (table or bench) and tape or weigh it down so there will not be any variation from the horizontal plane.
c) Place a 6 to 12 mm (1/4 to 1/2 inch) spot of each test reagent upon the surface of the test specimen. As each individual test reagent is deposited, place one of the glass covers, concave side down, over the test reagent. Next, move the glass cover gently while in contact with the surface of the material undergoing testing until the test reagent is both under and outside the glass cover. The entire circular rim of the glass cover shall be wetted by the test reagent. The test specimen shall be marked so that each test reagent is identified.
d) The test specimen shall stand undisturbed for 16 to 24 hours. Remove the glass covers and subject the test specimen to the cleaning procedures to remove the staining reagents.
e) After each cleaning procedure place the sample, without preinspection, on a table and then view it at an eye to specimen distance of approximately 750 to 900 mm (30 to 36 inches) and at an angle of approximately 45° to 75° from the horizontal plane (table surface). Rotate the specimen in the plane of the table and view from all directions. Direct sunlight or other angle light sources, which will accentuate or minimize the effect, shall be avoided.
f) Cleaning Procedures:

1) Flush the surface with tap water and wipe gently with the sponge moistened with water. Blot the test specimen dry with a clean, soft, white cloth. If the test reagent is removed by this procedure it shall be graded "0." If any stains remain, proceed to 2.
2) Wet the test specimen surface with the commercial cleaner. Moisten the cellulose sponge with tap water and place a 1 kilogram (2.20 lb) weight on its top. Push the weighted sponge back and forth without downward pressure for 25 cycles. Rinse the test specimen with tap water and wipe dry using a clean, soft, white cloth. If the test reagent is removed by this step it shall be graded (1). If any stains remain, proceed to 3.
3) Wet the test specimen surface with the commercial cleaner and add baking soda to achieve a paste consistency. Using a stiff nylon bristle brush, scrub the remaining areas where staining reagents can still be observed for 25 cycles. The specimen shall not be rubbed so as to permanently mar the surface finish. Rinse the test specimen with tap water and wipe dry using a clean, soft, white cloth. If the test reagent is removed by this procedure it shall be graded (2). If any stains remain, proceed to 4.

Copyright National Electrical Manufacturers Association
Provided by IHS under license with NEMA
No reproduction or networking permitted without license from IHS
Not for Resale

4) Using a cotton ball saturated with the nail polish remover, rub the stain gently for up to two minutes. Rinse the specimen with tap water and wipe dry using a clean, soft, white cloth. If the test reagent is removed by this procedure it shall be graded (3). If any stains remain, proceed to 5.
5) Place a cotton ball saturated with hypochlorite bleach on the stain, and allow it to remain in contact for a period of two minutes. Rinse the specimen with tap water and wipe dry using a clean, soft white cloth. If the test reagent is removed by this procedure it shall be graded (4).
6) If any test reagent remains visible after 5, the specimen shall be graded (5).

3.4.6 Test Report

The cleanability shall be reported as follows:

a) Add the results for each of the 15 stains. The range shall be 0 through 75.

A typical example is shown below.

Test Reagent Number	Stain	Score
1	Distilled water	0
2	50:50 Ethyl alcohol	0
3	Acetone	0
4	Household ammonia	0
5	10% Citric acid	0
6	Vegetable oil	0
7	Fresh coffee	0
8	Fresh tea	0
9	Catsup	1
10	Yellow mustard	2
11	10% Povidone iodine	2
12	Supermarket stamp ink—purple	2
13	#2 pencil	2
14	Wax crayon	3
15	Black paste shoe polish	4
	Total Score:	16

b) The stain resistance shall be reported as one of the following:

1) No effect—all stain reagents removed with no impairment to surface appearance. Any change in gloss due to the cleaning procedure is permitted.
2) Moderate effect—a difficult to perceive stain visible from all angles and directions. Any change in gloss due to the cleaning procedure is permitted.
3) Severe effect—any easy to perceive stain or disturbed surface visible from all angles and directions.

List the reagent(s) which caused moderate or severe effect.

3.5 BOILING WATER RESISTANCE

3.5.1 Scope

This test measures the ability of the surface of high-pressure decorative laminate (HPDL) to maintain its color and surface finish when subjected to boiling water.

Copyright National Electrical Manufacturers Association
Provided by IHS under license with NEMA
No reproduction or networking permitted without license from IHS
Not for Resale

3.5.2 Test Apparatus and Materials

The test apparatus and materials shall include:

a) A flat bottom heating vessel in accordance with Figure 3-2
b) Hot plate or equivalent
c) Tongs to lift the heating vessel
d) Overhead white fluorescent lights with bulb(s) positioned parallel to the line of sight and providing an intensity of 800 to 1100 lux (75 to 100 foot-candles) on the specimen surface
e) A PVAc (white glue) adhesive utilized in accordance with the manufacturer's instructions
f) Particleboard that is 19 mm (3/4 inch) thick and 720 kg/m^3 (45 lb./ft^3) nominal density and sanded to thickness with 100 grit paper (Union Camp Uniflake Industrial "AA" Vinyl Grade)
g) A clean, soft, white cloth

3.5.3 Test Specimens

The test specimen shall be at least 200 x 200 mm (8 x 8 inches) x thickness and shall be bonded to particleboard with PVAc adhesive. The bonded test specimen shall be conditioned for at least 48 hours prior to the test at a temperature of 23° ± 2°C (73.4° ± 3.6°F) and a relative humidity of 50 ± 5 percent.

3.5.4 Test Procedure

a) Fill the heating vessel to 12 mm (1/2 inch) from the rim with water and heat it until the water boils vigorously.
b) Examine the test specimen carefully prior to the test and note the conditions of the color and surface finish.
c) With the tongs, carefully remove the vessel from the hot plate and pour approximately 10 ml of boiling water on the horizontal surface of the test specimen and set the vessel containing the remainder of the boiling water in this puddle.
d) Allow the vessel to remain in place for 20 minutes.
e) Remove the vessel with the tongs. Wipe the specimen with a clean, soft, white cloth to remove any residual contaminants and dry thoroughly. Allow the specimen to stabilize at room temperature for a minimum of 24 hours.
f) Examine the conditioned test specimen by placing it, without preinspection, on a table and then view it at an eye to specimen distance of approximately 750 to 900 mm (30 to 36 inches) and at an angle of approximately 45° to 75° from the horizontal (table surface). The specimen shall be rotated in the plane of the table and viewed from all directions. Direct sunlight or other angle light sources, which will accentuate or minimize the effect, shall be avoided.
g) Record observations.

3.5.5 Factors Influencing the Accuracy of the Test

As water boils and evaporates, dissolved minerals are left behind and will adhere to the vessel walls forming scale which is an effective insulator. This scale must be removed periodically or test results can be altered significantly. Because of this, the use of distilled or demineralized water is recommended.

3.5.6 Test Report

The specimen shall be examined for blisters, crazing, delamination, whitening, or cracking.

The resistance to boiling water shall be reported as:

a) No effect—no change in color or surface finish

Copyright National Electrical Manufacturers Association
Provided by IHS under license with NEMA
No reproduction or networking permitted without license from IHS
Not for Resale

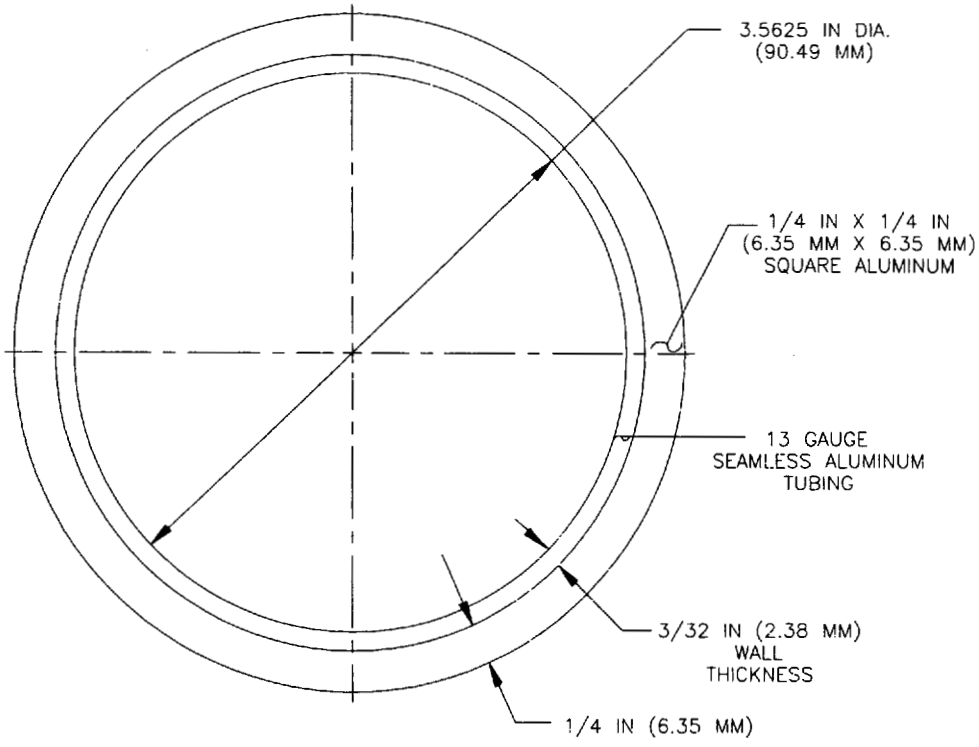

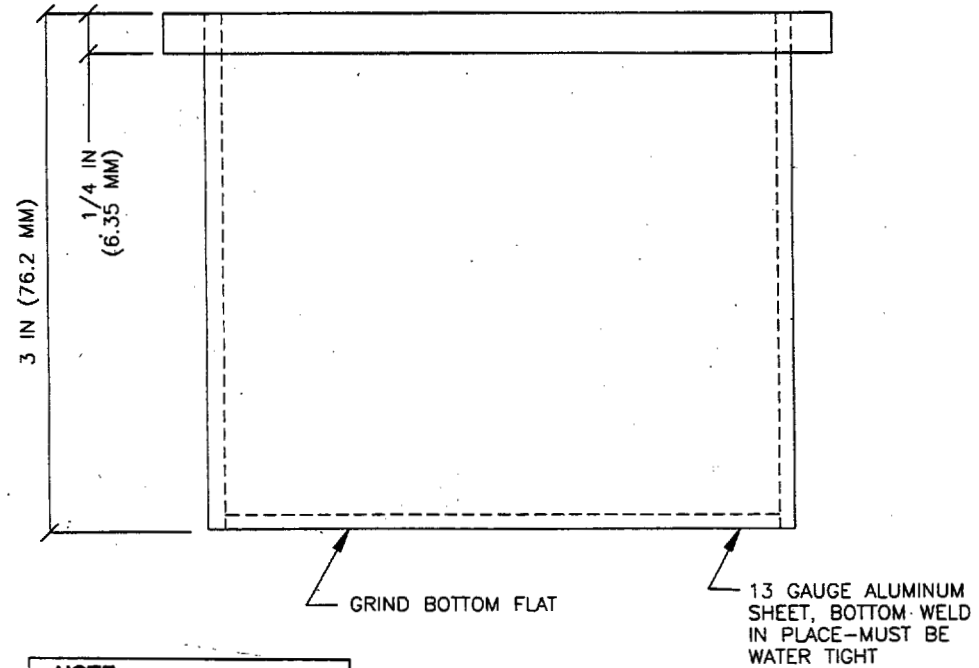

NOTE:
If new equipment is constructed, design to the next larger standard metric component except where dimensions are critical.

Figure 3-2
HEATING VESSEL

Copyright National Electrical Manufacturers Association
Provided by IHS under license with NEMA
No reproduction or networking permitted without license from IHS

Not for Resale

b) Slight effect—a change in color or surface finish only visible at certain angles or directions

c) Moderate effect—a change in color or surface finish visible from all angles and directions, but does not appreciably alter the original condition of the specimen

d) Severe effect—a change in color or surface finish which obviously and markedly alters the original condition of the specimen

3.6 HIGH TEMPERATURE RESISTANCE

3.6.1 Scope

This test measures the ability of the surface of high-pressure decorative laminate (HPDL) to maintain its color and surface finish when subjected to a high temperature.

3.6.2 Test Apparatus and Materials

The test apparatus and materials shall include:

a) A flat-bottom heating vessel in accordance with Figure 3-2

b) Hot plate or equivalent

c) Bath wax

d) Dial thermometer reading from 100° to 250°C (212° to 482°F) in 2°C gradations or the equivalent. Mercury filled glass thermometers shall not be used.

e) Tongs to lift the heating vessel

f) Overhead white fluorescent lights with bulb(s) positioned parallel to the line of sight and providing an intensity of 800 to 1100 lux (75 to 100 foot-candles) on the specimen surface

g) A PVAc (white glue) adhesive utilized in accordance with the manufacturer's instructions.

h) Particleboard that is 19 mm (3/4 inch) thick and 720 kg/m^3 (45 lb./ft^3) nominal density and sanded to thickness with 100 grit paper (Union Camp Uniflake Industrial "AA" Vinyl Grade)

i) Non-oily nail polish remover

3.6.3 Test Specimens

The test specimen shall be a minimum of 200 x 200 mm (8 x 8 inches) x thickness and shall be bonded to particleboard with PVAc adhesive. The bonded specimen shall be conditioned for at least 48 hours prior to the test at a temperature of 23° ± 2°C (73.4° ± 3.6°F) and a relative humidity of 50 ± 5 percent.

3.6.4 Test Procedure

a) Examine the test specimen carefully prior to the test and note the conditions of the color and surface finish.

b) Fill the heating vessel to 12 mm (1/2 inch) from the rim with bath wax. Heat the wax until it reaches a temperature of 185°C (365°F). Do not overheat as fire may result. Using the tongs, remove the vessel from the hot plate and allow the wax to cool to 180° ± 1°C (356° ± 2°F). Then place the vessel, using the tongs, on the test specimen and allow it to remain in place for 20 minutes.

c) Remove the vessel with the tongs and allow the specimen to stabilize at room temperature for a minimum of 24 hours.

d) Clean the specimen with non-oily nail polish remover to remove residual wax. Examine the conditioned test specimen by placing it, without preinspection, on a table and then view it at an eye to specimen distance of approximately 750 to 900 mm (30 to 36 inches) and at an angle of approximately 45° to 75° from the horizontal (table surface). The specimen shall be rotated in the

Copyright National Electrical Manufacturers Association
Provided by IHS under license with NEMA
No reproduction or networking permitted without license from IHS
Not for Resale

plane of the table and viewed from all directions. Direct sunlight or other angle light sources, which will accentuate or minimize the effect, shall be avoided.

e) Record observations.

3.6.5 Test Report

The specimen shall be examined for blisters, crazing, delamination, whitening, or cracking. The resistance to high temperature shall be reported as one of the following:

a) No effect—no change in color or surface finish

b) Slight effect—a change in color or surface finish only visible at certain angles or directions

c) Moderate effect—a change in color or surface finish visible from all angles and directions, but does not appreciably alter the original condition of the specimen

d) Severe effect—a change in color or surface finish which obviously and markedly alters the original condition of the specimen

3.7 LINEAR GLASS SCRATCH RESISTANCE *(VALUES UNDER CONSIDERATION)*

3.7.1 Scope

This test measures the ability of the surface of a high-pressure decorative laminate (HPDL) to resist scratching by a material of similar sharpness and hardness to silica.

3.7.2 Test Apparatus and Materials

The test apparatus and materials shall include:

a) Balanced Beam Scrape Adhesion and Mar Tester (Gardner Catalog No. SG-8101 or equivalent) as modified in Figure 3-3

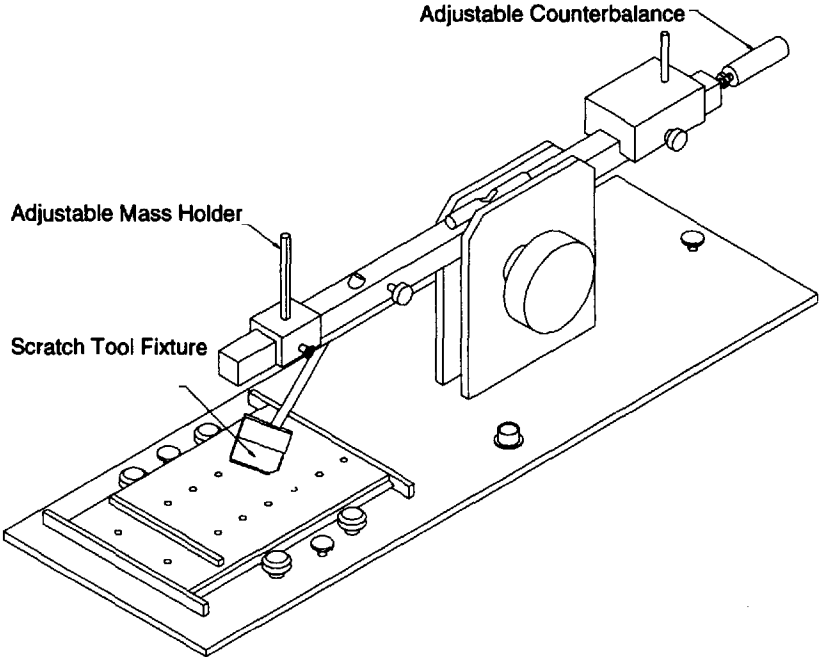

Figure 3-3
MODIFIED SCRATCH TESTER

Copyright National Electrical Manufacturers Association
Provided by IHS under license with NEMA
No reproduction or networking permitted without license from IHS
Not for Resale

b) Scratch tool fixture as shown in Figure 3-4

c) Fine adjustable counterweight as shown in Figure 3-5

d) Adjustable mass holder as shown in Figure 3-5

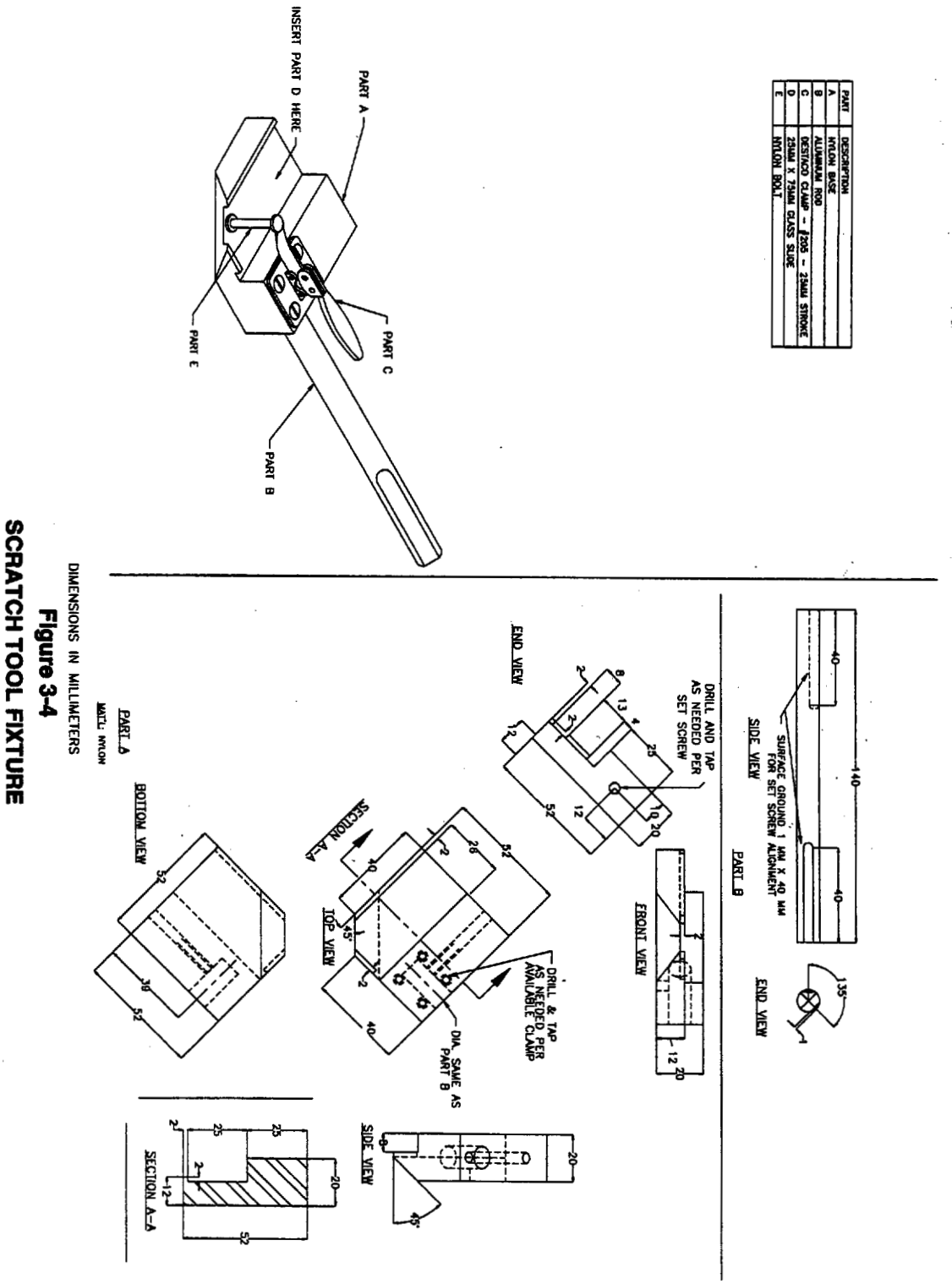

Figure 3-4
SCRATCH TOOL FIXTURE

Copyright National Electrical Manufacturers Association
Provided by IHS under license with NEMA
No reproduction or networking permitted without license from IHS
Not for Resale

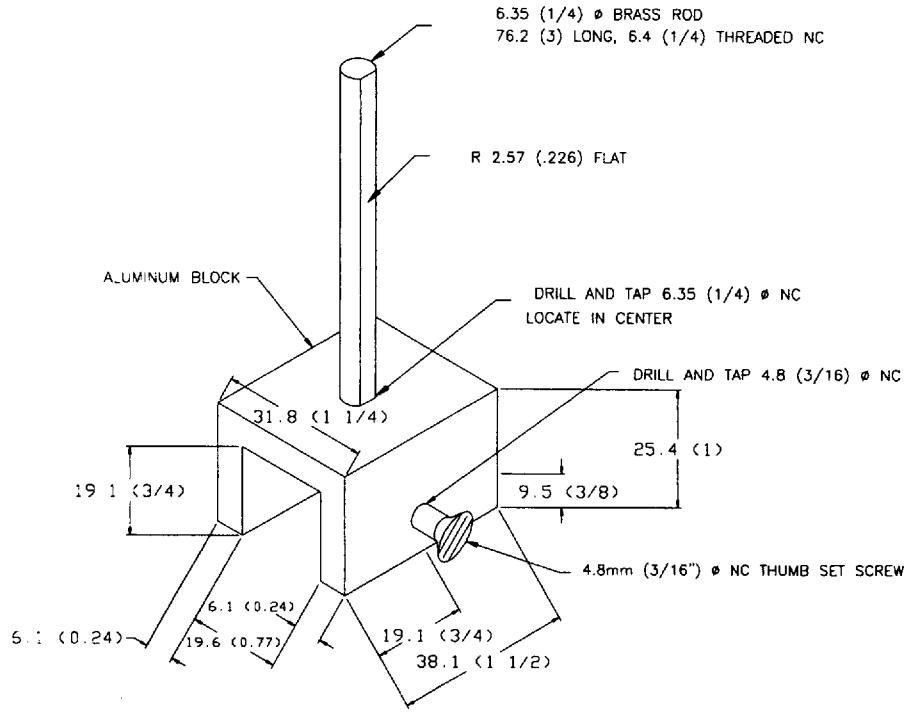

ADJUSTABLE MASS HOLDER

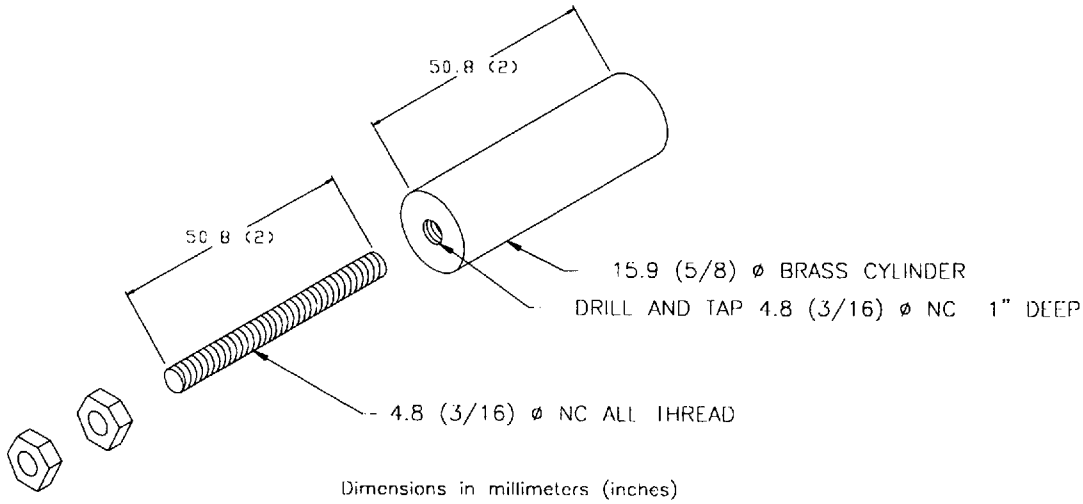

Dimensions in millimeters (inches)

ADJUSTABLE COUNTERBALANCE

Figure 3-5
ADJUSTABLE MASS HOLDER AND COUNTERBALANCE

Copyright National Electrical Manufacturers Association
Provided by IHS under license with NEMA
No reproduction or networking permitted without license from IHS

Not for Resale

e) New, precleaned, plain glass microscope slides, 75 x 25 mm (3 x 1 inch) (Corning Catalog No. 2947 or equivalent)

f) 20, 50, 100, and 200 gram weights (masses)

g) Small electronic balance for calibration. The capacity shall be a minimum of 150 grams and accurate to ± 0.1 gram minimum

h) Viewing enclosure as shown in Figure 3-6. The enclosure shall be of the dimensions shown in Figure 3-6 with a matte black finish over the interior surface. The light source shall consist of a white reflector with an incandescent style screw-in base and having an aperture of approximately 140 mm (5 1/2 in.). The bulb shall be of compact fluorescent type rated at 26 watts mounted such that the specimen is located vertically below the bulb base at a distance of approximately 600 mm (24 in.). The light source shall provide illumination of 900 lux ± 100 lux at the specimen surface.

i) Isopropyl alcohol

j) Clean, soft, white cloth

k) Viewing mask as per Figure 3-7

l) 45° viewing stand as shown in Figure 3-8

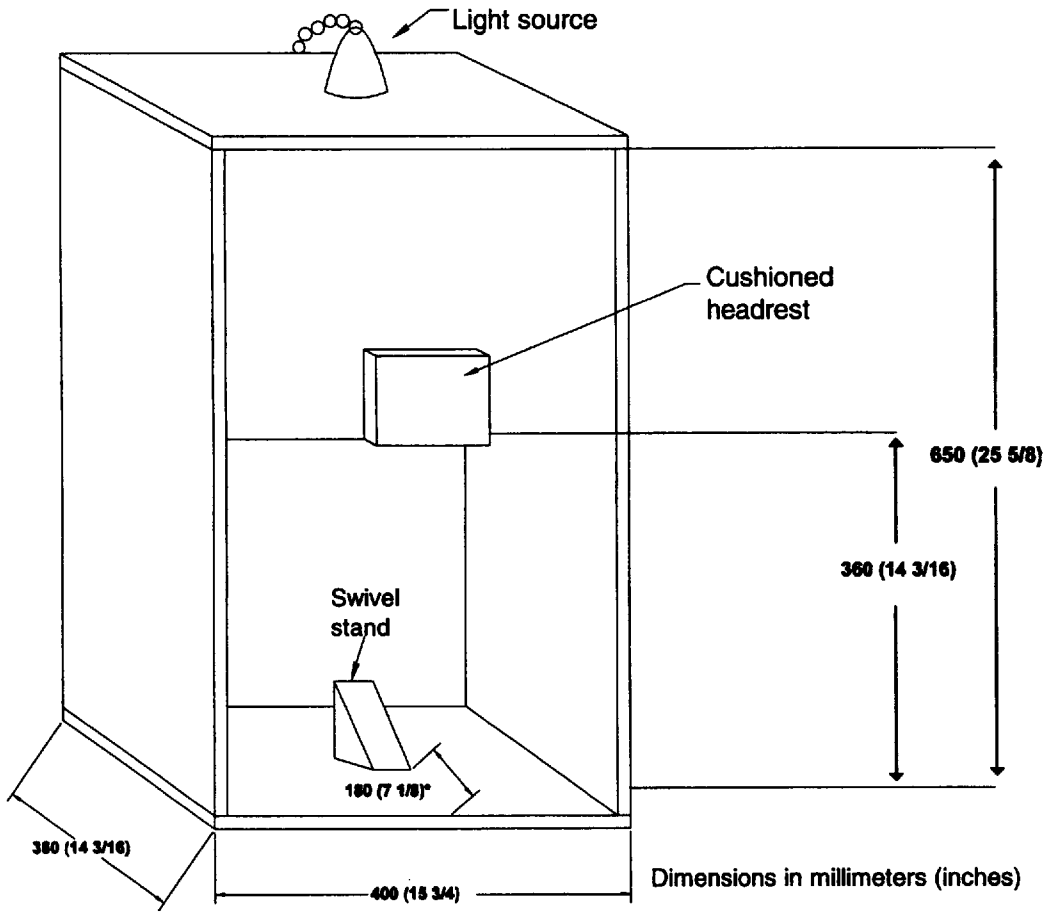

*Dimension is from front edge to center pin

Figure 3-6
VIEWING ENCLOSURE

Copyright National Electrical Manufacturers Association
Provided by IHS under license with NEMA
No reproduction or networking permitted without license from IHS
Not for Resale

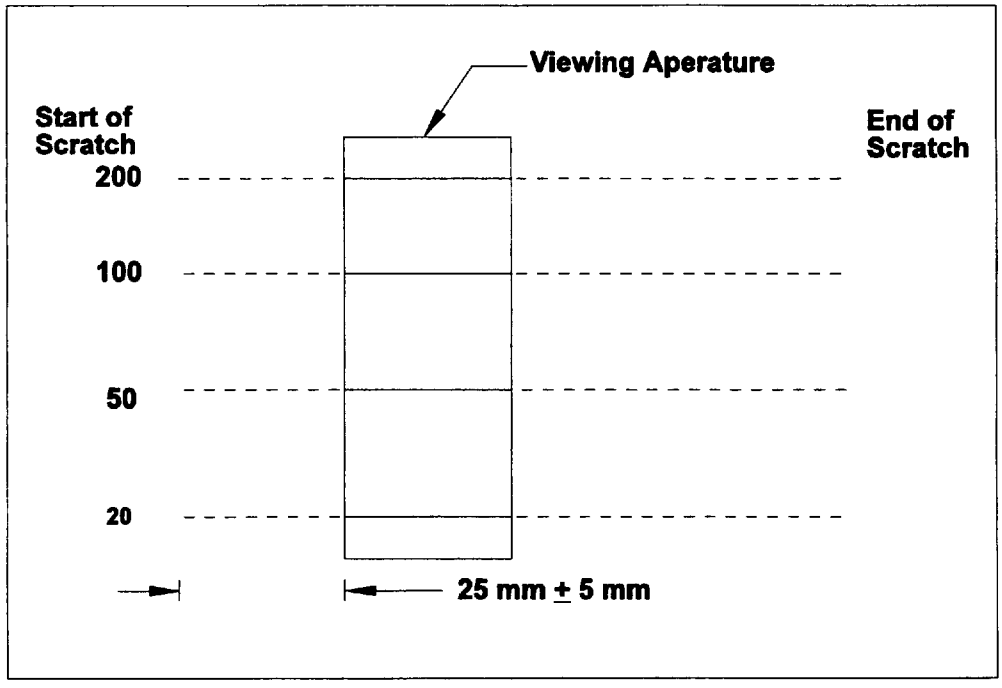

Figure 3-7
VIEWING MASK

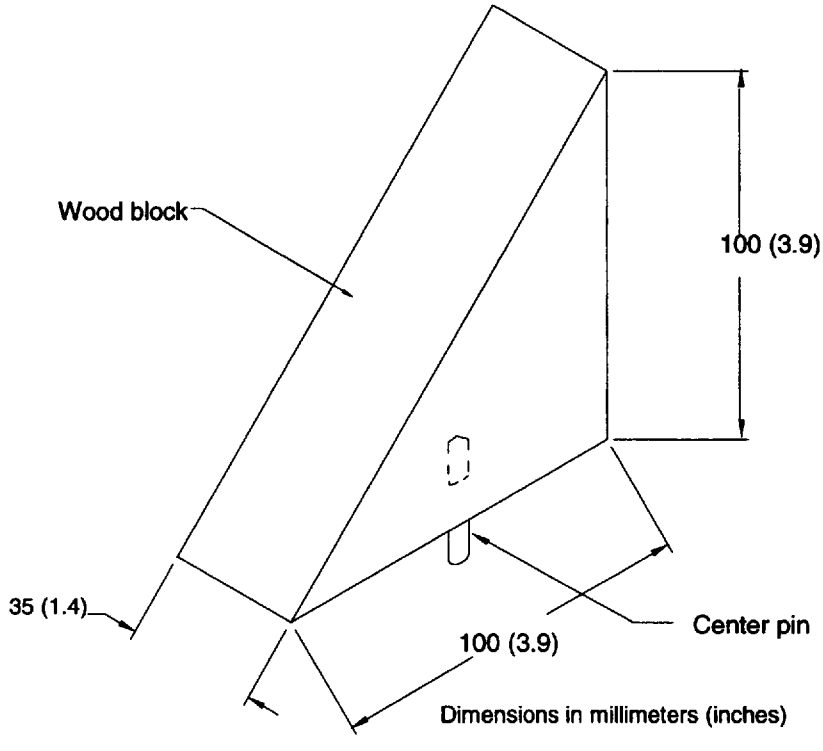

Figure 3-8
45° VIEWING STAND

Copyright National Electrical Manufacturers Association
Provided by IHS under license with NEMA
No reproduction or networking permitted without license from IHS
Not for Resale

3.7.3 Test Specimens

Test specimens shall be 100 x 150 mm (4 x 6 inches) x thickness. Samples shall be cut such that the 150 mm dimension is in the cross-machine direction. A minimum of three specimens shall be tested. All specimens shall be conditioned for at least 48 hours prior to the test at a temperature of 23° ± 2°C (73.4° ± 3.6°F) and a relative humidity of 50 ± 5 percent.

3.7.4 Calibration of Test Apparatus

a) Adjust the base of the test unit so that the base is level using the bubble level and the three leveling screws.

b) Insert a microscope slide into the holder and clamp in place.

c) Secure the specimen to the test unit.

d) Carefully lower the glass slide to the laminate surface. For the purpose of adjustment, the glass should contact the laminate in a location that will not be tested.

e) Adjust the position of the scratch tool arm in the beam arm such that the beam arm is level when the corner of the glass contacts the laminate surface. This is indicated by the level mounted on the top of the beam arm.

f) Adjust the mass holder on the beam arm such that the support pin is directly above the point at which the glass slide contacts the laminate.

g) Calibrate the calibration balance per the manufacturer's instructions.

h) Support the beam arm on the balance at a point even with the support pin of the mass holder so that the glass slide does not contact the laminate surface but is within 1 mm of the laminate surface. Suspend the beam from the balance from above via the thumb screw of the mass holder, or support the beam on the balance using an adjustable support from below.

i) Place the 100 g mass on the adjustable mass holder.

j) Adjust the counterbalance weight so that the calibration balance indicates 100 ± 0.5 grams.

3.7.5 Test Procedure

a) Clamp a glass slide in the holder so that a new, undamaged corner of the glass slide will come in contact with the laminate. Exercise caution not to use damaged corners of the slides.

b) Move the sled close to the pivot pole on the test unit.

c) Secure the test specimen to the sled such that the scratch will occur in the long direction.

d) Place the 20 gram mass on the adjustable mass holder.

e) Carefully lower the corner of the glass slide onto the laminate surface. The laminate surface shall be free of other scratches, nicks, gouges, etc. in the area of contact. If the corner of the slide fractures, change to a fresh corner of the slide and perform this scratch on a different location of the test specimen than where the fracture occurred.

f) Move the sled slowly and steadily away from the pivot pole to produce a single scratch in the laminate.

g) Lift the glass slide from the surface of the laminate and lock the beam in the up position.

h) Repeat steps 1 through 7 for each of the 50, 100, and 200 gram masses. Reposition the test specimen each time so that there is approximately 5 to 10 mm (1/4 inch) between scratches.

i) Remove the test specimen from the sled and clean the surface of the sample with 70% isopropyl alcohol and a clean, soft, white cloth.

j) Place the specimen behind the mask so that it is oriented as shown in Figure 3-7 so that the second 25 mm (1 in.) increment of the scratch is displayed through the mask aperture.

k) Place the masked specimen in the center of the viewing enclosure so that the sample is inclined approximately 45° from the bottom of the enclosure with the 200 gram scratch oriented

Copyright National Electrical Manufacturers Association
Provided by IHS under license with NEMA
No reproduction or networking permitted without license from IHS
Not for Resale

horizontally and at the top of the series of scratches. The masked specimen may be rotated up to 180° in the horizontal plane in order to accentuate the scratches.

l) The observer's forehead shall be against the headrest when viewing the specimen.

m) Grade each scratch location as follows using up to 5 seconds to observe the test specimen:

0 = no scratch visible at any rotational angle
1 = continuous scratch visible across the aperture

n) Record observations.

3.7.6 Factors Influencing the Accuracy of the Test

a) The corners of microscope slides should be uniform and without chips and breakage.

b) The speed of the sled should be steady and continuous. Stopping and restarting the sled along the scratch is not permitted.

3.7.7 Test Report

Report the scratch resistance as the lowest mass at which a grade of "1" occurs or greater than 200 g if no grade of "1" is recorded.

The scratch resistance of high-pressure decorative laminate (HPDL) is influenced by surface finish and color. In general terms, light colors show better resistance to scratching than dark colors. For a given color, prints are better than solid colors. Textured surfaces have better scratch resistance than smooth surfaces. Chart 3-1 shows the relative effect of surface finish and color on the scratch resistance performance of high-pressure decorative laminates (HPDL). The choice of surface finish, color, and print can be made to suit the particular application for which it is intended. For exceptional cases of high gloss finishes and/or dark colors, the value utilized should be agreed upon between the interested parties.

3.8 BALL IMPACT RESISTANCE

3.8.1 Scope

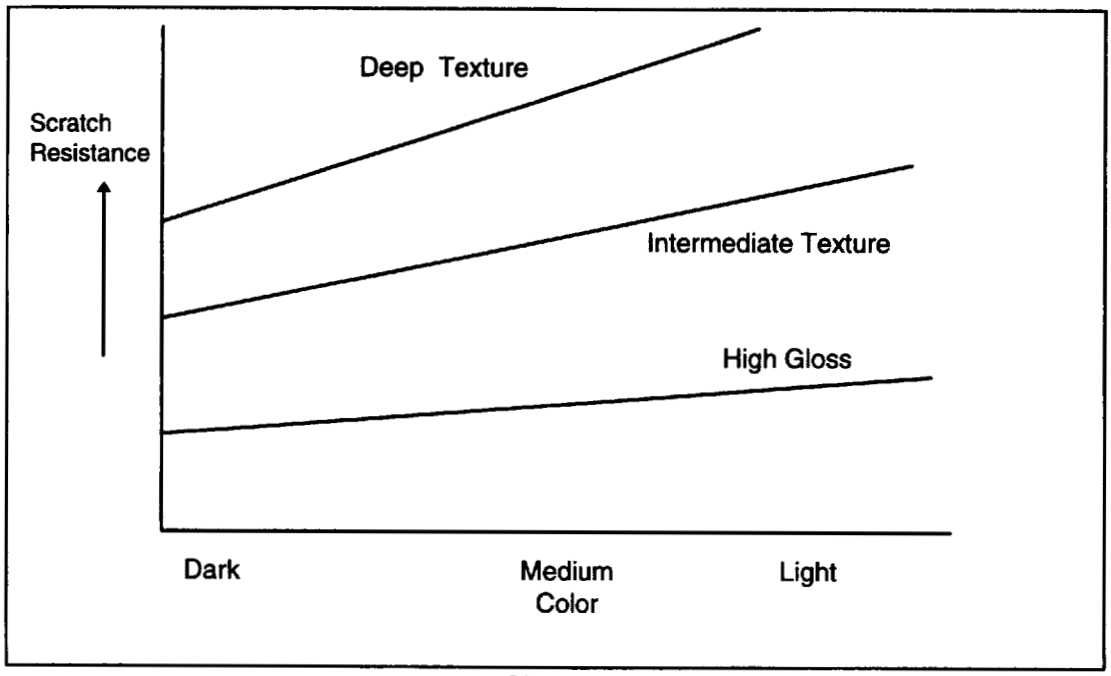

Chart 3-1
RELATION OF SCRATCH RESISTANCE TO SURFACE FINISH AND COLOR

Copyright National Electrical Manufacturers Association
Provided by IHS under license with NEMA
No reproduction or networking permitted without license from IHS
Not for Resale

This test measures the ability of high-pressure decorative laminate (HPDL) to resist fractures due to impact by a large diameter ball.

3.8.2 Test Apparatus and Materials

The test apparatus and materials shall include:

a) A free-fall test apparatus of the type shown in Figure 3-9, or the equivalent

b) A polished stainless steel ball weighing 224 ± 3 grams, measuring 38.1 mm (1-1/2 inches) in diameter and having no damaged or flattened surface

c) Clamping jig capable of holding the test specimen flat. See Figure 3-10, or the equivalent

d) Overhead white fluorescent lights with bulb(s) positioned parallel to the line of sight and providing an intensity of 800 to 1100 lux (75 to 100 foot-candles) on the specimen surface

e) A PVAc (white glue) adhesive utilized in accordance with the manufacturer's instructions

f) Particleboard that is 19 mm (3/4 inch) thick and 720 kg/m^3 (45 lb./ft^3) nominal density and sanded to thickness with 100 grit paper (Union Camp Uniflake Industrial "AA" Vinyl Grade)

Copyright National Electrical Manufacturers Association
Provided by IHS under license with NEMA
No reproduction or networking permitted without license from IHS
Not for Resale

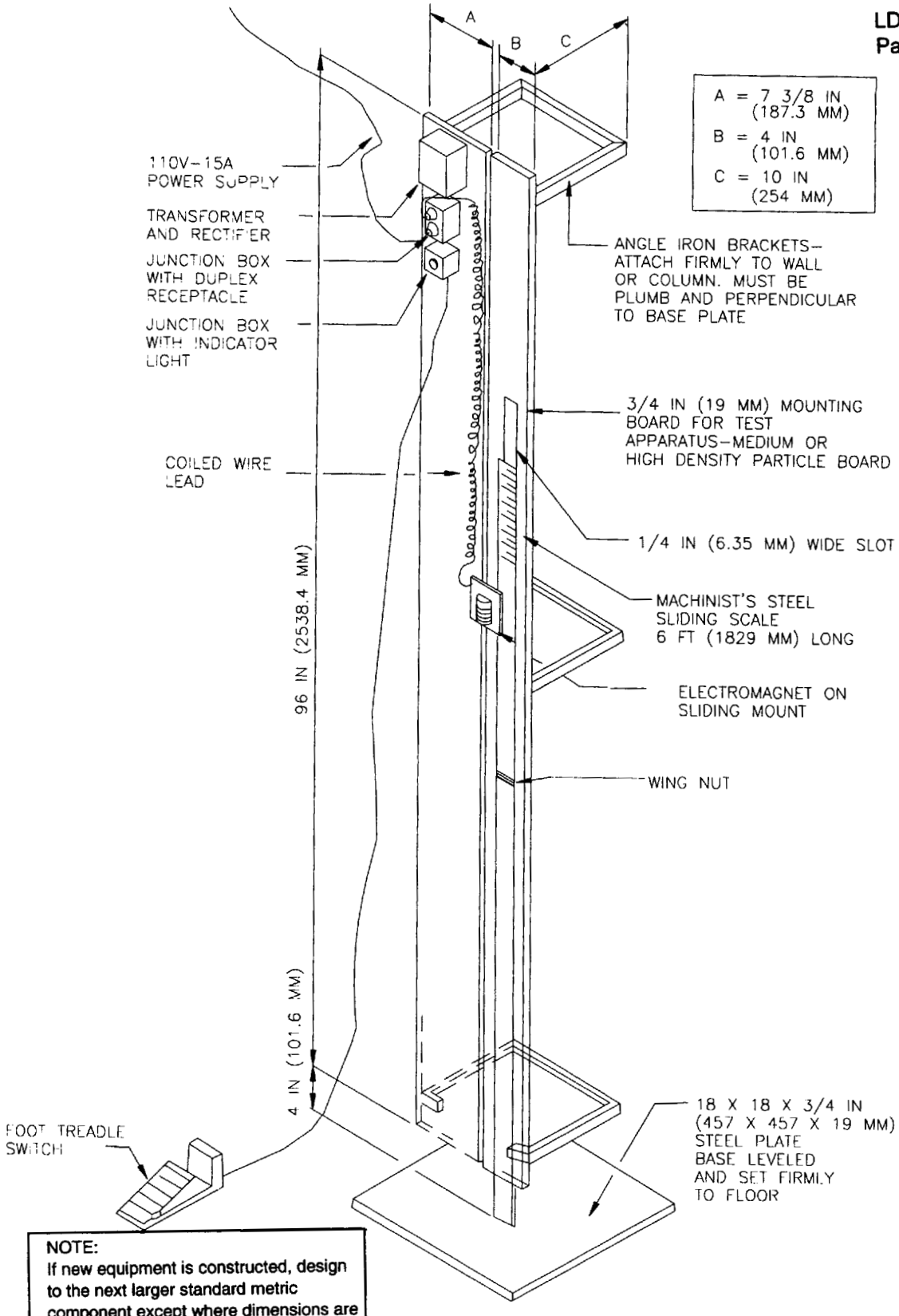

NOTE:
If new equipment is constructed, design to the next larger standard metric component except where dimensions are critical.

Figure 3-9
FREE-FALL BALL IMPACT TEST APPARATUS

Copyright National Electrical Manufacturers Association
Provided by IHS under license with NEMA
No reproduction or networking permitted without license from IHS
Not for Resale

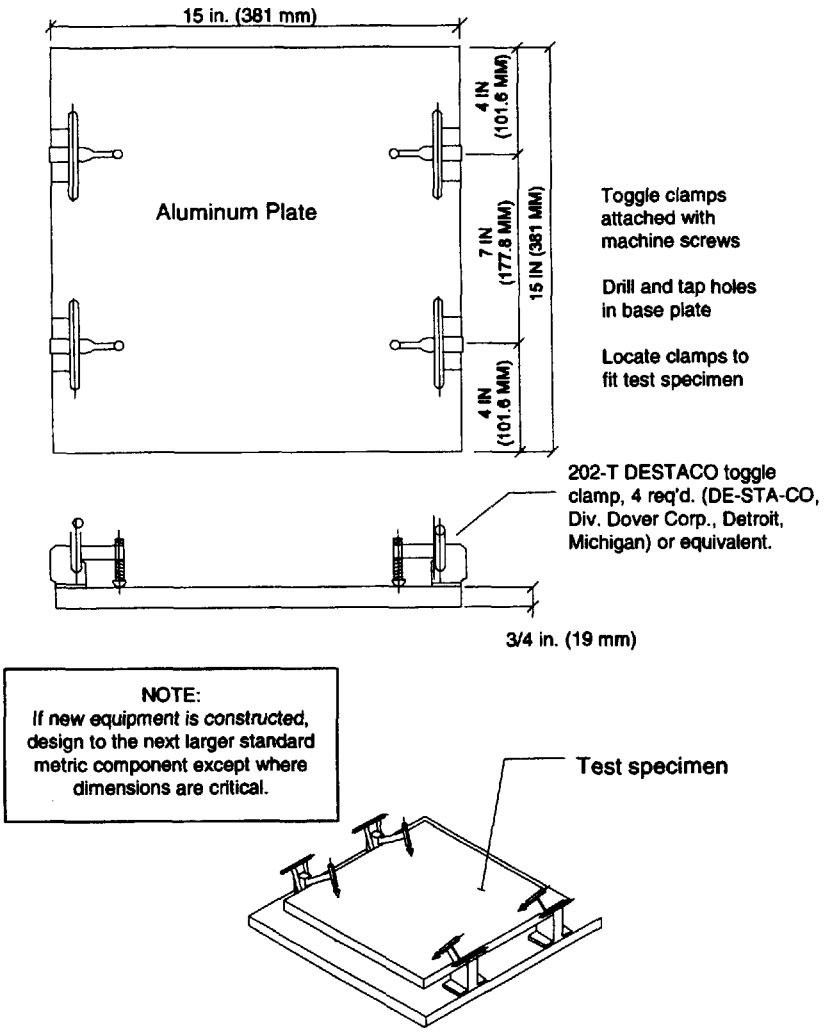

Figure 3-10
BALL IMPACT CLAMPING JIG

3.8.3 Test Specimens

The test specimen shall not be larger than 300 x 300 mm (12 x 12 inches) x thickness and shall be bonded to particleboard with PVAc adhesive. All bonded specimens shall be conditioned for at least 48 hours prior to the test at a temperature of 23° ± 2°C (73.4° ± 3.6°F) and a relative humidity of 50 ± 5 percent.

3.8.4 Test Procedure

a) Clamp the test specimen in the clamping jig and place it on the solid base of the free-fall test apparatus.

b) Adjust the height scale so that it touches the face of the test specimen.

c) Position the electromagnet at any arbitrary height above the test specimen.

d) Place the ball on the electromagnet and drop the ball. Catch the ball on the first rebound so that multiple impacts do not occur. Impact positions shall be at least 25 mm (1 inch) apart and 50 mm (2 inches) from the edge of the specimen.

e) Examine the impact spot for cracks and determine the result.

Copyright National Electrical Manufacturers Association
Provided by IHS under license with NEMA
No reproduction or networking permitted without license from IHS
Not for Resale

f) Decision shall not be based on the use of stains, dyes, or magnification. Raise or lower the electromagnet height as necessary and repeat step d and e until the maximum height at which no cracking occurs is determined.

g) Drop the ball from the height determined in step d two additional times in different locations on the test specimen. If either drop fails, reduce the height by 25 mm (1 inch) and continue testing until a total of three successful results have been obtained at that height.

3.8.5 Factors Influencing Accuracy of the Test

a) Damaged or flattened balls should never be used

b) The test specimen and clamping jig should be completely supported on the solid base. Warped specimens or lack of support can affect results by as much as 100 percent

c) The fall path of the ball should be precisely perpendicular to the specimen's surface

d) Improperly conditioned test specimens can affect results drastically

3.8.6 Test Report

The test report shall indicate the actual height of impact resistance.

3.9 DART IMPACT RESISTANCE

3.9.1 Scope

This test measures the ability of high-pressure decorative laminate (HPDL) to resist fracture due to impact by a small diameter ball.

3.9.2 Test Apparatus and Materials

The test apparatus and materials shall include:

a) A free-fall test apparatus of the type shown in Figure 3-11

b) Impact darts weighing 50.0 ± 0.5 grams and 25.0 ± 0.5 grams respectively, consisting of a steel dart tipped with a 5 mm (0.195 inch) diameter ball having no damaged or flattened surface. See Figure 3-7.

c) The tube and darts shall be lubricated with a dry lubricant to minimize friction.

d) Black, water washable marking pen (suitable for overhead transparencies)

e) Overhead white fluorescent lights with bulb(s) positioned parallel to the line of sight and providing an intensity of 800 to 1100 lux (75 to 100 foot-candles) on the specimen surface

f) A clean, damp, soft, white cloth

g) A PVAc (white glue) adhesive utilized in accordance with the manufacturer's instructions

h) Particleboard that is 19 mm (3/4 inch) thick and 720 kg/m^3 (45 lb./ft^3) nominal density and sanded to thickness with 100 grit paper (Union Camp Uniflake Industrial "AA" Vinyl Grade)

3.9.3 Test Specimens

The test specimen shall be 200 x 200 mm (8 x 8 inches) and shall be bonded to particleboard utilizing a PVAc adhesive and shall be conditioned for at least 48 hours prior to the test at a temperature of 23° ± 2°C (73.4° ± 3.6°F) and a relative humidity of 50 ± 5 percent.

3.9.4 Test Procedure

a) Place the conditioned specimen face up on a rigid horizontal surface.

Copyright National Electrical Manufacturers Association
Provided by IHS under license with NEMA
No reproduction or networking permitted without license from IHS
Not for Resale

NEMA LD*3 95 ■ 6470242 0508384 T48 ■

TABLE 3-1 DART IMPACT TEST APPARATUS		
NO.	NAME	DESCRIPTION
1	POLYETHYLENE BASE	57 MM O.D. X 13 MM I.D. X 25 MM H.
2	GUIDE TUBE	13 MM DIA. X 1.0 MM WALL X 915 MM H.
3	DART	10 MM (.375 IN.) O.D. STL. ROD
4	HANDLE	2.0 MM DIA X 19.0 MM L. STL. ROD
5	BALL	5 MM DIA. STL.

NOTE 1:

SCRIBE LINES AND ENGRAVE NUMBERS 0 TO 750 MM AT 25 MM INCREMENTS BEGINNING 50 MM FROM BASE

NOTE 2:

A. FABRICATE DARTS FROM 10 MM DIA. COLD ROLLED STEEL ROD

B. 50 GM. (±.05) DART LENGTH IS APPROX. 106.9 MM (4.210 IN). MAY VARY TO MAINTAIN REQUIRED WEIGHT.

C. 25 GM. (±.05) DART LENGTH IS APPROX. 56.1MM (2.210 IN)

D. MODIFIED TRIANGULAR SHAPE IS TO REDUCE DROPPING FRICTION

NOTE: FOR METRIC CONVERSION 1 IN. = 25.4 MM

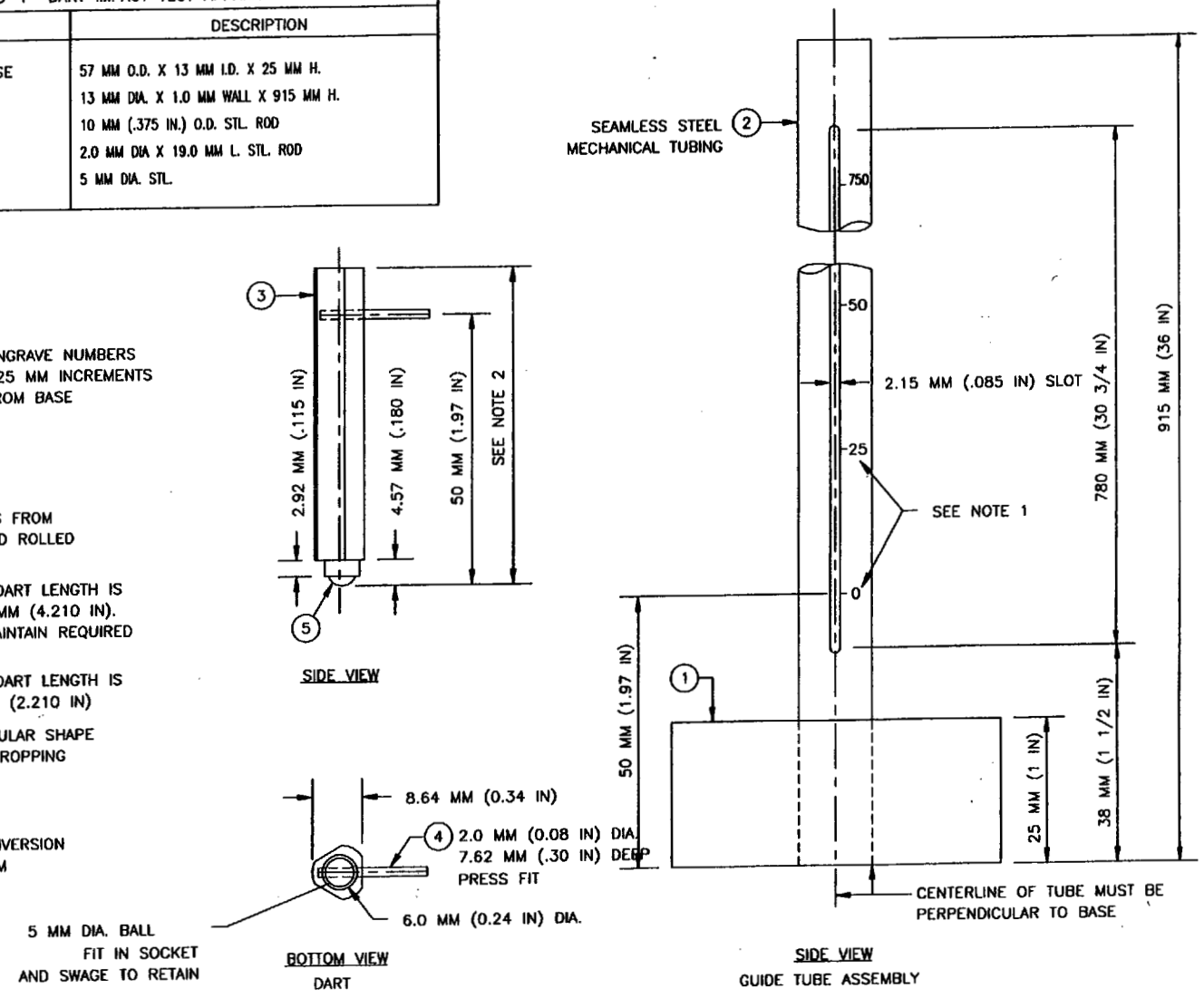

Figure 3-11
DART IMPACT TESTER

Copyright National Electrical Manufacturers Association
Provided by IHS under license with NEMA
No reproduction or networking permitted without license from IHS
Not for Resale

a) The 25 gram dart shall be used for testing high-pressure decorative laminates having a nominal thickness of 0.8 mm (0.032 inch) or less. The 50 gram dart shall be used for testing all other high-pressure decorative laminate types having greater than 0.8 mm thickness.

b) Position the test apparatus on the decorative face of the specimen so the edge of the round base is tangent to two edges of the square specimen at one 90° corner. The bottom of the circular base shall be flush against the face of the specimen.

c) Position the dart at a height of 125 mm (5 inches) as indicated by the engraved numbers on the vertical tube and allow the dart to fall and impact against the face of the specimen. Catch the dart when it rebounds so that multiple impacts do not occur.

d) Move the test apparatus to the right 15 mm (5/8 inch) keeping the edge of the circular base tangent to the edge of the specimen.

e) Position the dart at a height of 150 mm (6 inches) and allow it to fall and impact against the face of the specimen. Again, catch the dart so that multiple impacts do not occur.

f) Again move the test apparatus to the right 15 mm (5/8 inch) as in step e, and increase the height of the dart by 25 mm (1 inch) and allow it to fall and impact against the face of the specimen. Again, do not allow multiple impacts.

g) Repeat step g along 1 edge of the specimen as shown in Figure 3-12.

h) Use the marking pen to ink over impact points caused by the dart. Use the clean, damp, soft, white cloth to wipe each impact point. Fractures may appear as hairline cracks, concentric circles, or chips.

i) Starting at the lowest impact point, follow the path of increasing impacts until three consecutive failures occur. If 3 consecutive impacts are not observed, continue with step g along the next edge. The impact fracture height is the value immediately preceding the series of three fractures.

j) Record the fracture height and calculate the impact resistance.

3.9.5 Calculation

Dart impact is reported in Joules (J), the metric unit of work. One Joule = one Newton (N) multiplied by one meter (M); J = N x M. By expressing the result of the dart impact test in joules, it is possible to combine the effect of the dart weight and the height of drop causing failure.

The 25 g dart exerts a force of 0.245 N.
The 50 g dart exerts a force of 0.490 N.

a) To calculate joules, multiply the dart force times the highest impact height in meters at which no fracturing occurs.

Example: 25 g dart
impact height 495 mm

$$\frac{25}{1000} \times 9.807^{*} = 0.245 \text{ Newtons}$$

$$0.245 \text{ N} \times 0.495 \text{ M} = 0.121 \text{ J}$$

*acceleration due to gravity = 9.807 m/s^2)

3.9.6 Test Report

The impact resistance value in joules shall be reported.

Copyright National Electrical Manufacturers Association
Provided by IHS under license with NEMA
No reproduction or networking permitted without license from IHS
Not for Resale

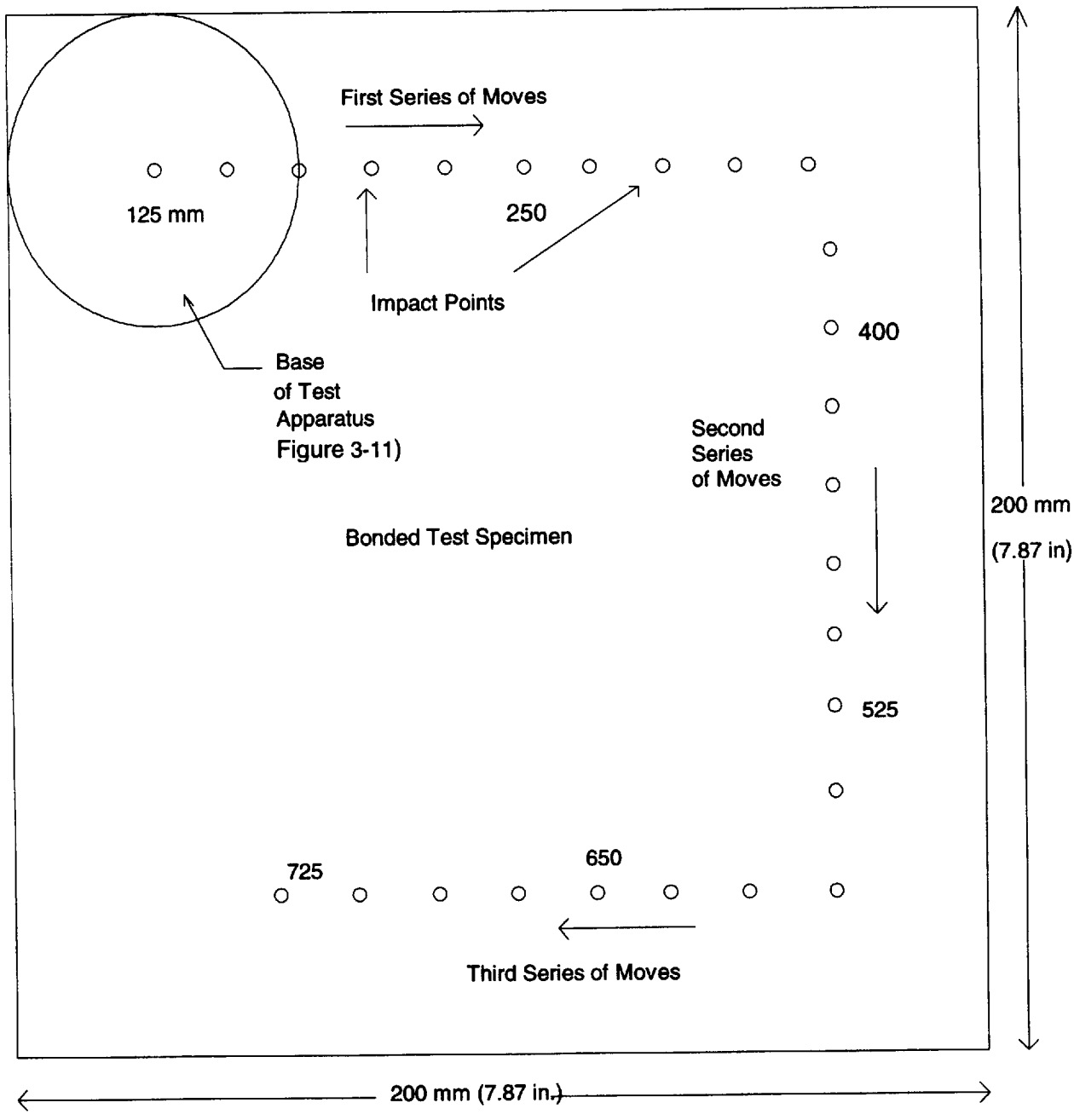

Figure 3-12
PROCEDURE CLARIFICATION FOR DART IMPACT RESISTANCE

Copyright National Electrical Manufacturers Association
Provided by IHS under license with NEMA
No reproduction or networking permitted without license from IHS
Not for Resale

3.10 RADIANT HEAT RESISTANCE

3.10.1 Scope

This test measures the ability of the surface of high-pressure decorative laminate (HPDL) to resist damage when subjected to a radiant heat source.

3.10.2 Test Apparatus and Materials

The test apparatus and materials shall include:

a) Resistor heating element with silver soldered copper lead lugs as shown in Figure 3-13 and wired in accordance with Figure 3-14

b) Draft excluding enclosure having:

1) Approximate inside dimensions as follows:
Width—330 mm (13 inches)
Length—400 mm (16 inches)
Height—250 mm (10 inches)

2) Open bottom, or equally convenient arrangement

3) Means for visually inspecting the test specimen while it is under test

c) Stop watch or other suitable timer

d) Constant current heater control as shown in Figure 3-14

e) Radiation calibration block in accordance with Figure 3-15

f) A suitable temperature measuring device

g) A spotlight directed on the test area to observe effects

h) A candle to blacken the metal calibration disc

I) A PVAc (white glue) adhesive utilized in accordance with the manufacturer's instructions

j) Particleboard that is 19 mm (3/4 inch) thick and 720 kg/m^3 (45 lb./ft^3) nominal density and sanded to thickness with 100 grit paper (Union Camp Uniflake Industrial "AA" Vinyl Grade)

Copyright National Electrical Manufacturers Association
Provided by IHS under license with NEMA
No reproduction or networking permitted without license from IHS
Not for Resale

Bill of Materials				
Item	Material	Name	Dimensions	Number Required
1	NEMA Grade G-5	Cap	Diameter – 1 in. (25.4 mm); Length – 1 in. (25.4 mm)	1
2	NEMA Grade G-5	Mounting Plate	1/4 in. (6.35 mm) diameter x 2 in. (50.8 mm) x 5 in. (127 mm)	1
3	NEMA Grade G-5	Mounting Plate	1 x 2 x 3 in. (25.4 x 50.8 x 76.2 mm)	1
4	...	Heater Element	...	1
5	Copper	Mesh Wire	Length – about 4 in. (101.6 mm)	2
6	Brass	Sleeve	Outside Diameter – 3/4 in. (19 mm); Length – 1/4 in. (31.75 mm)	1
7	Brass	Nut	Outside Diameter – 1 in. (25.4 mm); Thickness – 3/16 in. (4.76 mm)	1
8	Metal	Screw	10-32 x 3/4 in. (19 mm) long	4
9	Copper	Lead Lug	...	1
10	Copper	Lead Lug	...	1

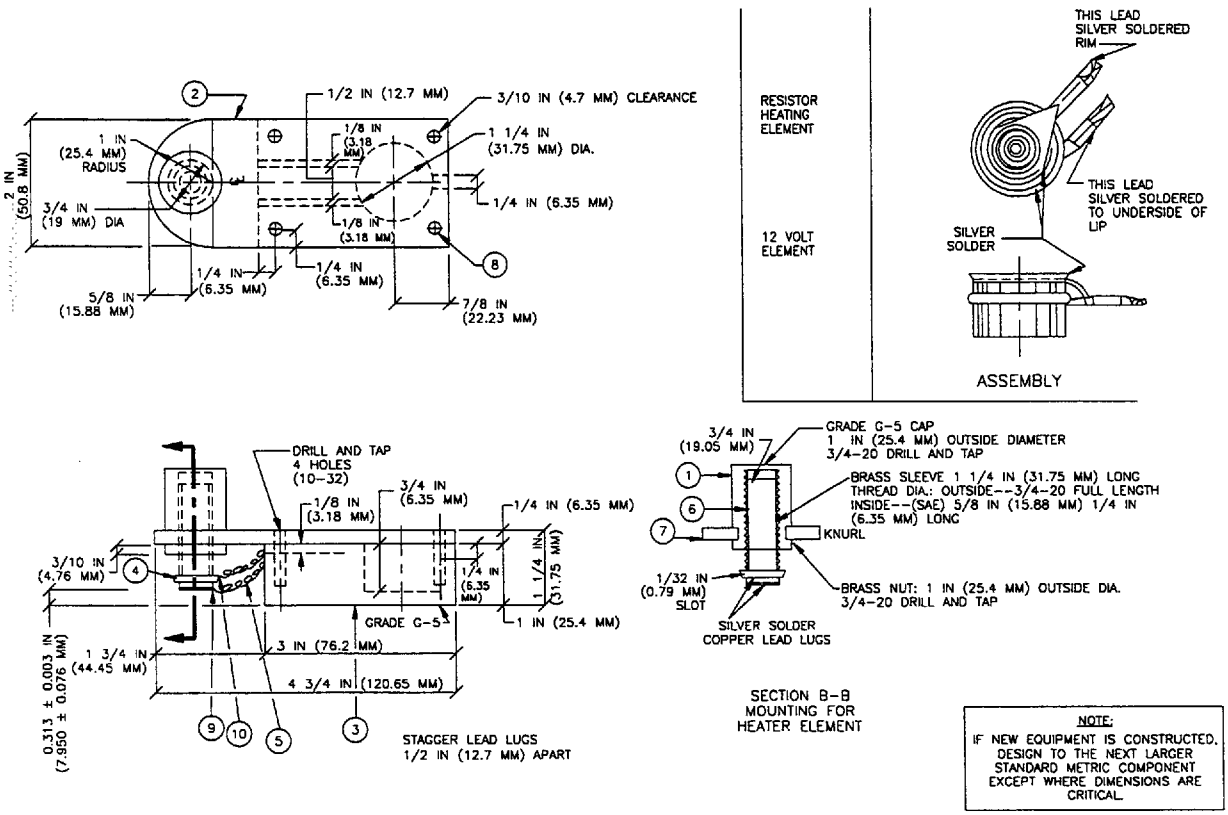

Figure 3-13
CONSTRUCTION OF RESISTOR HEATING ELEMENT ASSEMBLY

Copyright National Electrical Manufacturers Association
Provided by IHS under license with NEMA
No reproduction or networking permitted without license from IHS
Not for Resale

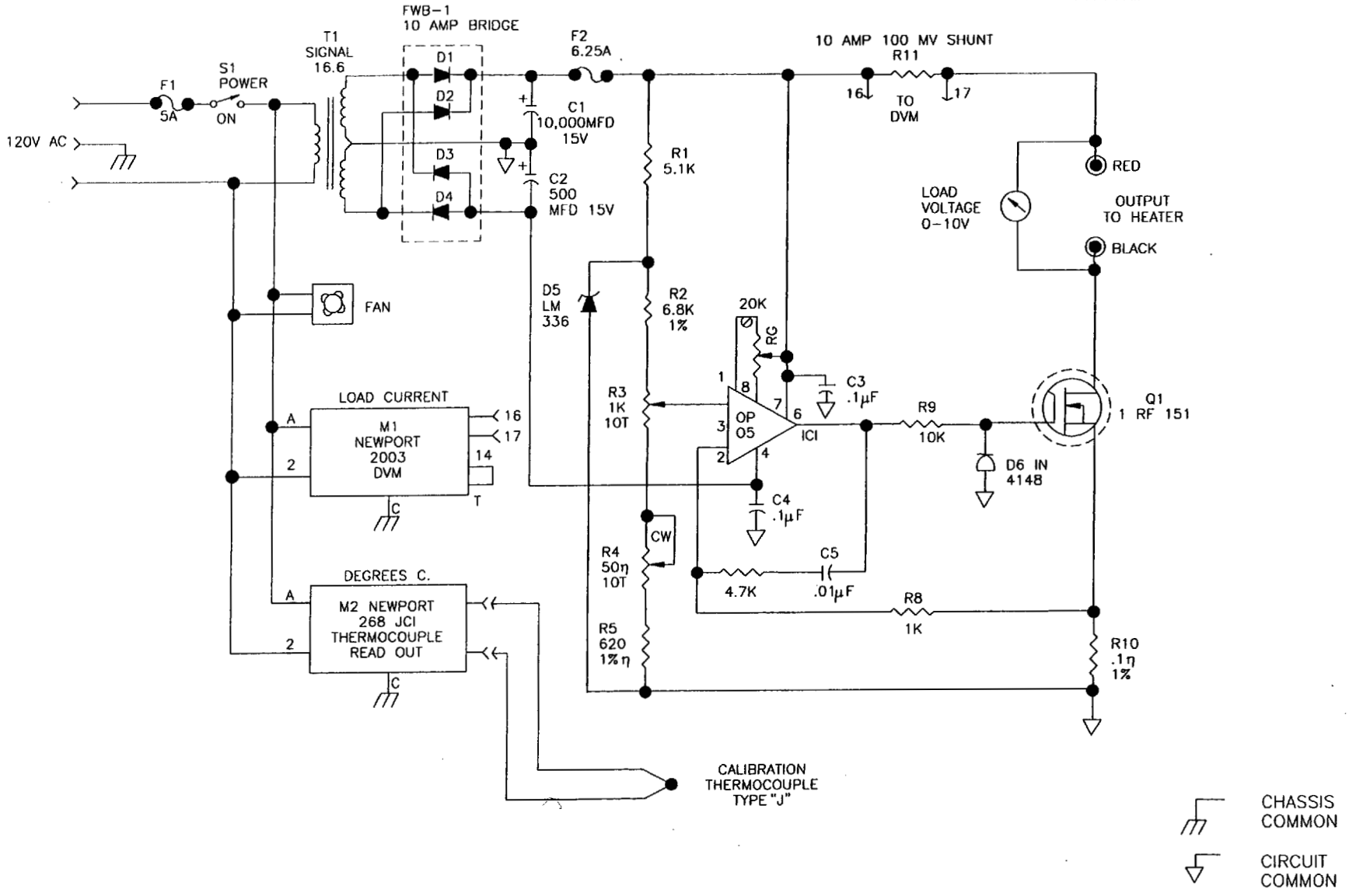

Figure 3-14
SCHEMATIC DIAGRAM FOR RADIANT HEAT TEST

Copyright National Electrical Manufacturers Association
Provided by IHS under license with NEMA
No reproduction or networking permitted without license from IHS
Not for Resale

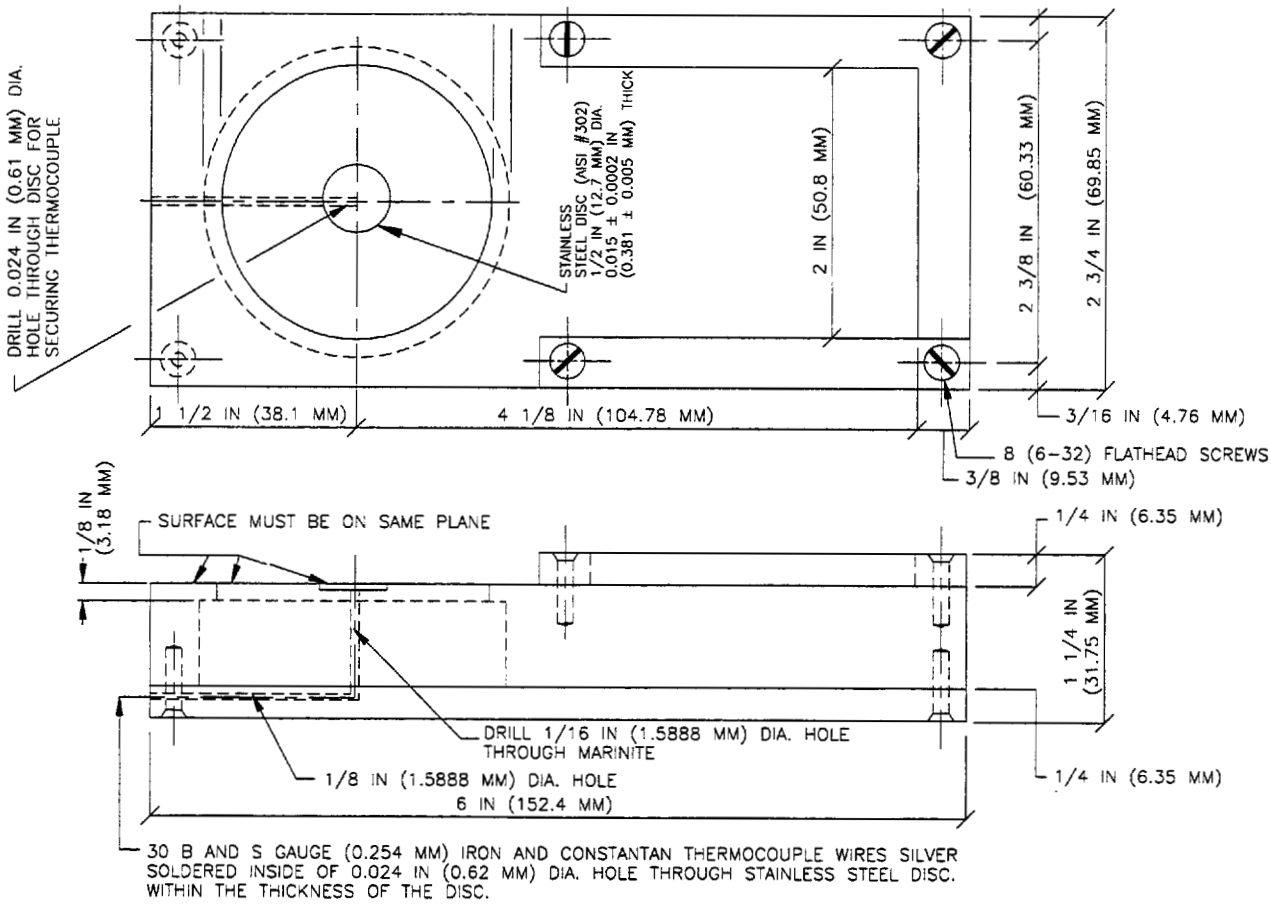

Note—If new equipment is constructed, design to the next larger standard metric component except where dimensions are critical.

Figure 3-15
RADIATION CALIBRATION BLOCK

The main body of the block should be constructed of NEMA Grade G-5 or G-9 laminated material as designated in NEMA Standards Publication LI 1-1989.

The thermocouple wires are first silver soldered from the front surface of the 0.581 mm (0.015 inch) thick stainless steel disc and the inside of the 0.0610 mm (0.024 inch) hole with a minimum of silver solder to effect good contact. The wires should be No. 30 B & S gauge (0.254 mm) iron and constantan, insulated with glass fiber. The front surface of the disc should be polished by first removing the excess length of thermocouple wires, sanding to produce a smooth surface and then polishing with a crocus cloth.

The portion of the block immediately surrounding the disc should be a low density heat resistant insulating material having a density of approximately 577 kg/m^3 (36 lbs./ft^3) and sanded on both surfaces. This insulating material should be coated with linseed oil primer.

Copyright National Electrical Manufacturers Association
Provided by IHS under license with NEMA
No reproduction or networking permitted without license from IHS
Not for Resale

3.10.3 Test Specimens

The test specimen shall be 200 x 200 mm (8 x 8 inches) x thickness and shall be bonded to particleboard with PVAc adhesive. The test specimen shall be conditioned for at least 48 hours prior to the test at a temperature of 23° ± 2°C (73.4° ± 3.6°F) and a relative humidity of 50 ± 5 percent.

3.10.4 Calibration

a) Place the heating element on the calibration block, making certain that the unit is located against the guides and is flat against the top of the calibration block. This will locate the heating element directly over the metal disc.

b) Adjust the height of the heating element so that the distance between the disc and the resistance coil is 7.95 ± 0.08 mm (0.313 ± 0.003 inch).

c) Remove the heating element from the calibration block for a preliminary heating period. Adjust the current input to the heating element to approximately 3.5 amperes and allow the element to heat for 15 minutes.

d) Blacken the metal disc with the carbon from the flame of the candle which is mounted vertically and shielded from all drafts. Hold the calibration block so that the disc is halfway down in the bright yellow portion of the flame. Avoid the lower or darker portion of the flame as it consists of partially unburned wax which produces an undesirable waxy carbon deposit. Allow the carbon to deposit on the disc for 30 seconds and then remove the calibration block from the flame.

e) Replace the heating element over the blackened disc and cover the assembly to prevent cooling from drafts. Allow 15 minutes for the calibration disc to heat up with no temperature being determined. Adjust the current input as necessary so that the final observed temperature is between 289° and 294°C (552.2° and 561.2°F).

f) After the necessary adjustments are made, proceed with the test in accordance with 3.10.5.

3.10.5 Test Procedure

a) Position the heater on the test specimen so that the resistance coil is at least 38 mm (1-1/2 inches) in from any edge, start the timer at this instant, cover the assembly with the enclosure within 2 seconds, and continue until the specimen fails or for 600 seconds.

b) The second test shall be made at a location at least 100 mm (4 inches) from the first test, and the third test shall be made at a location of at least 100 mm (4 inches)from both previous tests. The heater block shall not rest on an area of the test specimen which has been previously subjected to test.

3.10.6 Factors Influencing the Accuracy of the Test

Four important factors which affect the accuracy of the test are:

a) Accuracy of the distance between the calibration disc and resistance coil of 7.95 ± 0.08 mm (0.313 ± 0.003 inch).

b) Accuracy of the distance between the surface of the test specimen and the resistance coil. Their planes should be parallel and 7.95 ± 0.08 mm (0.313 ± 0.003 inch) apart.

c) Effects of drafts during calibration or during test. The heater element, calibration block, and test specimen should be shielded on top and all four sides during calibration and test.

d) Temperature of the test specimen.

Copyright National Electrical Manufacturers Association
Provided by IHS under license with NEMA
No reproduction or networking permitted without license from IHS
Not for Resale

3.10.7 Test Report

The radiant heat resistance shall be reported as the average time of failure in seconds, of the three tests on any one specimen. Failure is evidenced by blistering, charring, permanent discoloration, or crazing. If the failure does not occur, report the result as 600 seconds plus.

3.11 DIMENSIONAL CHANGE

3.11.1 Scope

This test measures the dimensional changes of high-pressure decorative laminate (HPDL) over an extreme range of temperature and relative humidity.

3.11.2 Test Apparatus and Materials

The test apparatus and materials shall include:

a) Circulating air oven capable of maintaining a temperature of 70° ± 2° C (158° ± 3.6°F)

b) Humidity chamber capable of maintaining a relative humidity of 90 ± 3 percent at a temperature of 40° ± 2°C (104.0° ± 3.6°F)

c) Caliper with a total measuring range of 150 to 200 mm (6 to 8 inches). The resolution shall be 0.01 mm (0.0005") minimum with an accuracy of 0.03 mm (0.001 in.). Centering points are recommended but not required

d) Pin prick

e) Hammer

f) Ruler

g) Fixture to maintain specimens in a planar position while measurements are obtained as outlined in Figure 3-16

h) Clean, soft, white cloth

3.11.3 Test Specimens

a) Six specimens shall constitute a set

b) Each specimen shall be 120 mm x 120 mm (4-3/4 x 4-3/4 inch) x thickness

c) Test specimens shall be cut in such a way as to have smooth edges and be free from nicks, chips, or cracks

d) The test specimens shall be conditioned for at least 48 hours prior to the test at a temperature of 23° ± 2°C (73.4° ± 3.6°F) and a relative humidity of 50 ± 5 percent

3.11.4 Test Procedure

a) Using the ruler locate the point at midpoint between two adjacent corners and 10 mm (13/32 inch) in from the edge. Mark this location with the hammer and pin prick. Repeat this for the other three sides of that specimen and for the four sides of the other five specimens. See Figure 3-17 for detail.

b) Insert each specimen one at a time into the fixture and obtain MD and CD measurements across the center of each specimen by placing the points of the caliper in opposing pin prick locations. These measurements shall be accomplished within three minutes after removal from the conditioning chamber. These measurements are recorded as the initial measurements.

Copyright National Electrical Manufacturers Association
Provided by IHS under license with NEMA
No reproduction or networking permitted without license from IHS
Not for Resale

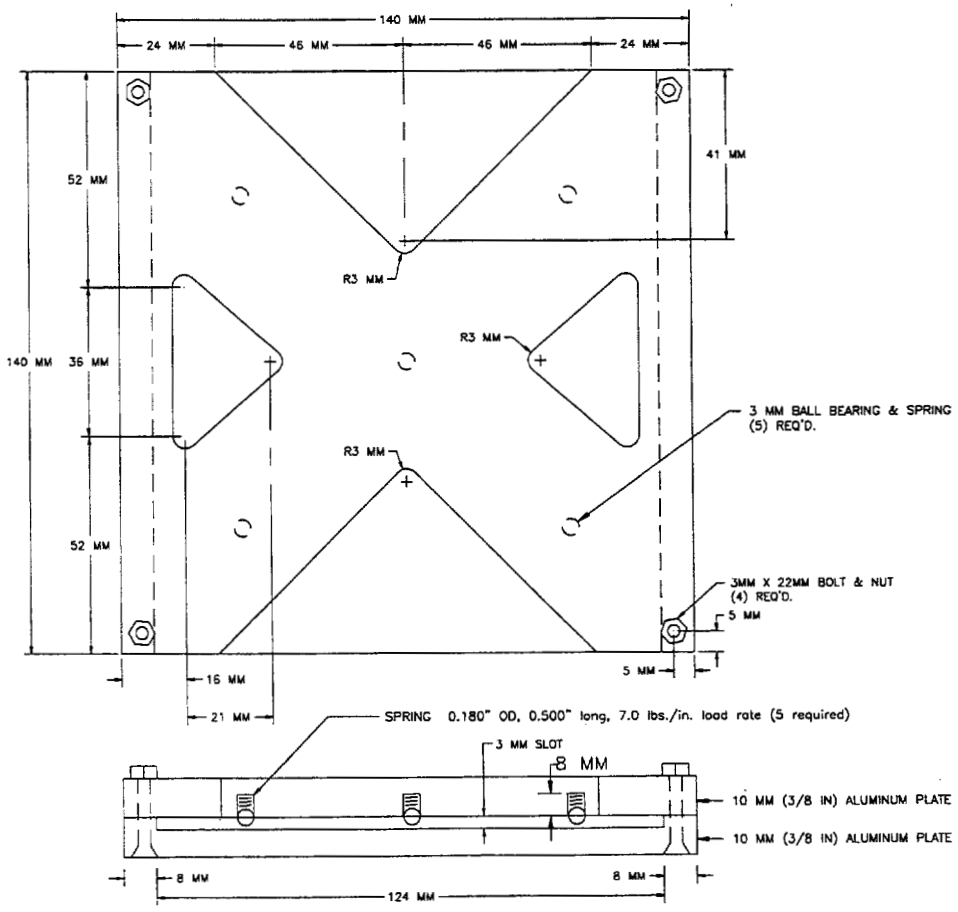

Figure 3-16
DIMENSIONAL CHANGE AND STABILITY FIXTURE

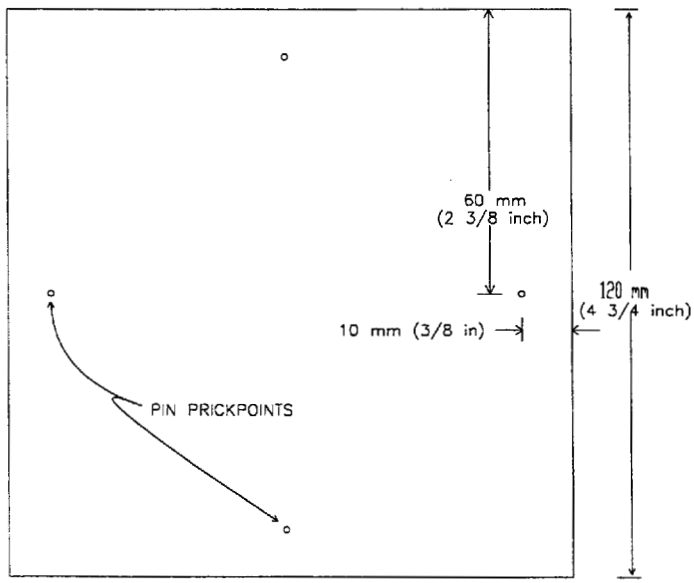

Figure 3-17
DIMENSIONAL STABILITY TEST SPECIMEN

Copyright National Electrical Manufacturers Association
Provided by IHS under license with NEMA
No reproduction or networking permitted without license from IHS
Not for Resale

a) Preheat the oven to 70° ± 2°C (158° ± 3.6°F) and place three of specimens in it for 24 hours.

b) At the end of 24 hours remove the test specimens from the oven and cool them in a dessicator for 1 hour.

c) Within 3 minutes after their removal from the dessicator, insert each specimen one at a time into the fixture and obtain MD and CD measurements across the center of each specimen by placing the points of the caliper in opposing pin prick locations. Record these as the final dry heat measurements .

d) Preset the high humidity chamber for 90 ± 3 percent relative humidity at 40° ± 2°C (104.0° ± 3.6°F) and place the other three specimens in it for 7 days.

e) At the end of 7 days remove the test specimens from the chamber and wipe them free of surface water with a clean, soft white cloth.

f) Within 1 minute after their removal from the chamber, insert each specimen one at a time into the fixture and obtain MD and CD measurements across the center of each specimen by placing the points of the caliper in opposing pin prick locations. Record these as the final high humidity measurements.

3.11.5 Calculation

Calculate the change as a percentage of the initial length. Calculate the mean percentage change for each of the two sets of three specimens to the nearest 0.05% Calculate the cumulative dimensional change for each direction of the sheet. It is the sum of the absolute value for the average dimensional changes in each of the dry heat and high humidity tests if the movements are in opposite directions. If they are in the same direction, the larger of the two average changes shall be taken as the cumulative dimensional change. The absolute figure shall be reported.

Example (using specimens in MD direction):

Dry Heat Test				
Specimen	**1**	**2**	**3**	**Mean**
Initial Distance (mm)	100.28	99.89	99.95	
Final Distance (mm)	99.83	99.52	99.55	
Change (mm)	-0.45	-0.37	-0.40	
Change (%)	-0.45	-0.37	-0.40	-0.41
-0.41% rounded to nearest 0.05%				-0.40%

High Humidity Test				
Specimen	**1**	**2**	**3**	**Mean**
Initial Distance (mm)	100.11	99.74	99.21	
Final Distance (mm)	100.63	100.49	99.92	
Change (mm)	+ 0.52	+ 0.75	+ 0.71	
Change (%)	+ 0.52	+ 0.75	+ 0.72	0.63
0.63% rounded to nearest 0.05%				0.65%

The movements in the two tests are in opposite directions, therefore, the cumulative dimensional change is equal to (0.40% + 0.65% = 1.05%).

Copyright National Electrical Manufacturers Association
Provided by IHS under license with NEMA
No reproduction or networking permitted without license from IHS
Not for Resale

3.11.6 Test Report

The test report shall include the following:

a) Cumulative dimensional change in the machine direction in percent (average of three specimens at each condition)

b) Cumulative dimensional change in the cross-machine direction in percent (average of three specimens at each condition)

3.12 ROOM TEMPERATURE DIMENSIONAL STABILITY

3.12.1 Scope

This test measures the dimensional stability of high-pressure decorative laminate (HPDL) over an extreme range of relative humidities at room temperature.

3.12.2 Test Apparatus and Materials

The test apparatus shall include:

a) High humidity chamber capable of maintaining a temperature of 22° ± 2°C (71.6° ± 3.6°F) and a relative humidity of 90% ± 3%

b) Low humidity chamber capable of maintaining a temperature of 22° ± 2°C (71.6° ± 3.6°F) and a relative humidity of 15 ± 5%

The low humidity chamber may be set up to operate either completely mechanically or chemically to control the dry bulb temperature to 22° ± 2° C (71.6° ± 3.6° F) and maintain 15% ± 5% relative humidity by maintaining a saturated solution of Lithium Chloride ($LiCl{\cdot}H_2O$) in water placed in a tray within the chamber area

c) Caliper with a total measuring range of 150 to 200 mm (6 to 8 inches). The resolution shall be 0.01 mm (0.0005 in.) minimum with an accuracy of 0.03 mm (0.001 in.). Centering points are recommended but not required.

d) Pin prick

e) Hammer

f) Ruler

g) Fixture to maintain specimens in a planar position while measurements are obtained as outlined in Figure 3-16

3.12.3 Test Specimens

a) Three specimens shall constitute a set.

b) Each specimen shall measure 120 mm x 120 mm (4-3/4 x 4-3/4 inch) x thickness.

c) Test specimens shall be cut in a way as to have smooth edges and be free from nicks, chips, or cracks.

3.12.4 Test Procedure

a) Using the ruler locate the point at midpoint between two adjacent corners and 10 mm (13/32 inch) in from the edge. Mark this location with the hammer and pin prick. Repeat this for the other three sides of that specimen and for the four sides of the other two specimens. See Figure 3-17 for detail

b) Place the specimen set in the humidity chamber and maintain a temperature of 22°C ± 2°C (71.6°F ± 3.6°F) and a relative humidity of 90% ± 3% for a period of 96 hours. Specimens shall be positioned so that air can circulate freely around the samples

Copyright National Electrical Manufacturers Association
Provided by IHS under license with NEMA
No reproduction or networking permitted without license from IHS
Not for Resale

c) At the end of 96 hours, remove the specimen from the chamber. Insert each specimen one at a time into the fixture and obtain MD and CD measurements across the center of each specimen by placing the points of the caliper in opposing pin prick locations. These measurements shall be accomplished within three minutes after removal from the chamber. These measurements are recorded as the initial measurements.

d) Immediately place the specimen set into the humidity chamber and maintain a temperature of 22°C ± 2°C (71.6°F ± 3.6°F) and a relative humidity of 15% ± 5% for a period of 96 hours. Specimens shall be positioned so that air can circulate freely around the samples.

e) At the end of 96 hours, remove the specimen from the chamber. Insert each specimen one at a time into the fixture and obtain MD and CD measurements across the center of each specimen by placing the points of the caliper in opposing pin prick locations. These measurements shall be accomplished within three minutes after removal from the chamber. These measurements are recorded as the final measurements.

3.12.5 Calculation

The gross dimensional change is defined as the algebraic difference of the average dimensional changes between the initial and final measurements.

The percentage of dimensional change is expressed as a positive or negative percentage and calculated by the average gross dimensional change divided by the average initial measurement multiplied by 100.

Example (using specimens in MD direction):

a) Average of 3 initial measurements = 104.02 mm

b) Average of 3 final measurements = 103.05 mm

c) Gross dimensional change = 0.97 mm

d) (0.97 mm mm/104.02 mm) x 100 = 0.93%

e) Percentage of dimensional change = 0.93%

3.12.6 Test Report

The test report shall include the following:

a) Test method

b) Percentage of dimensional change in the machine direction

c) Percentage of dimensional change in the cross-machine direction

d) Any exceptions to the method utilized during testing

3.13 WEAR RESISTANCE

3.13.1 Scope

This test measures the ability of the surface of high-pressure decorative laminate (HPDL) to resist abrasive wear-through of the decorative layer.

3.13.2 Test Apparatus and Materials

The test apparatus and materials shall include:

a) Abrading machine (Teledyne Taber Inc. Catalog No. 5130 or equivalent)

b) Two sets of NEMA Wheels (Teledyne Taber Inc. Catalog No. S-32, or equivalent)

Copyright National Electrical Manufacturers Association
Provided by IHS under license with NEMA
No reproduction or networking permitted without license from IHS
Not for Resale

c) Supply of zinc plates (Teledyne Taber Inc. Catalog No. S-34, or equivalent) which are 0.787 mm (0.031 inch) rolled zinc sheet.

d) Sandpaper strips 12.7 mm (1/2 inch) wide in the machine direction by 153 mm (6 inch), 180 grit aluminum oxide, open coat, light weight finishing paper, glue bond.

e) Double-faced adhesive paper tape 12.7 mm (1/2 inch) wide.

f) Analytical balance and weights capable of weighing to the nearest 1 milligram.

g) Isopropyl alcohol.

h) Powdered zinc stearate.

i) Clean, soft, white, cloth.

3.13.3 Test Specimens

The test specimen shall be of the nominal thickness of the material to be tested and shall be either squares with rounded corners or circular discs. Each specimen shall have a minimum cross-dimension of 103 mm (4-1/16 inches) with a 7 mm (1/4 inch) diameter hole in the center. A minimum of three specimens shall be tested. All specimens shall be conditioned for at least 48 hours prior to the test at a temperature of 23° ± 2°C (73.4° ± 3.6°F) and a relative humidity of 50 ± 5 percent.

3.13.4 Preparation of Test Wheels

The test wheels supplied with the abrading machine shall be ready for use in the test except for the application of the sandpaper.

Apply a light dusting of zinc stearate to the rubber rim of the test wheels. Apply the 12.7 mm (1/2 inch) wide strips of double-faced tape and sandpaper to the periphery of each wheel. Butt join them carefully and avoid contaminating the face of the sandpaper. The outside diameter of the finished wheel shall be 50.9 ± 0.65 mm (2.004 ± 0.026 inches).

3.13.5 Preparation of Test Apparatus

a) The sandpaper strips shall be placed in an oven for at least 24 hours at 28°C (82°F) to remove any moisture. Upon removing the sandpaper strips from the oven, they shall be stored in a desiccator until used.

b) Set up the abrading machine with the 500 gram plugs in place.

c) Place the test wheels on the arbor and fasten them in position.

d) Connect the vacuum source.

3.13.6 Standardization of Abrasive

a) Make up test wheels for each lot of sandpaper received.

b) Using fresh sandpaper, place the abrader wheels on the surface of the zinc plate, turn on the vacuum, and allow the turntable to make 500 revolutions. Wipe the zinc plate clean with 70% isopropyl alcohol, allow it to dry, weigh it to the nearest milligram (W_1) and then return it to the turntable.

c) Using fresh sandpaper, place the abrader wheels on the surface of the zinc plate, turn on the vacuum, and allow the turntable to make 500 revolutions. Remove the zinc plate. Wipe zinc plate clean with 70% isopropyl alcohol , allow it to dry, and reweigh it to the nearest milligram (W_2). The weight loss of the zinc plate shall be 110 ± 30 milligrams.

d) Use fresh sandpaper and repeat step c to obtain W_3.

e) If the weight loss, either (W_1 - W_2) or (W_2 - W_3) is out of the specified range, disregard those values and repeat the standardization of abrasive using fresh sandpaper from the same lot. If the

Copyright National Electrical Manufacturers Association
Provided by IHS under license with NEMA
No reproduction or networking permitted without license from IHS
Not for Resale

weight loss of the second standardization is also out of the specified range, reject that lot of sandpaper.

f) A correction factor for each lot of sandpaper is calculated as follows:

$$\text{Correction Factor} = \frac{(W1 - W2)+(W2 - W3)}{2 \times 110}$$

3.13.7 Test Procedure

a) Clean the surface of the test specimen with 70% isopropyl alcohol and allow it to dry. Weigh the specimen to the nearest milligram (W_1) if the rate of wear value is desired.

b) Apply fresh sandpaper to the abrader wheels. Fasten the test specimen to the turntable of the machine and start the abrader.

c) Inspect the specimen every 25 revolutions until the initial wear point (IP) is reached. Record the number of revolutions.

The initial wear point is defined as follows:

Printed patterns—that point at which a clearly recognizable part of the print has been removed in 4 quadrants of the specimen, and the base paper is exposed.

Solid colors—that point at which the color layer is first worn through in 4 quadrants and the sublayer is exposed.

Decorative inclusions in the overlay—that point at which the decorative inclusions are completely removed the full width of the abrading wheel around its entire path.

d) Restart the machine and run it until the final wear point (FP) is reached. Record the number of revolutions. Weigh the specimen to the nearest milligram (W_2) if the rate of wear value is desired. The final wear point is defined as follows:

Printed patterns—that point at which the printed pattern is completely removed, exposing the base paper the full width of the abrading wheel around its entire path.
Solid colors—that point at which the color layer is completely removed, exposing the sublayer the full width of the abrading wheel around its entire path.

Decorative inclusions in the overlay—that point at which the decorative inclusions are completely removed the full width of the abrading wheel around its entire path.

e) Replace the 12.7 mm (1/2 inch) sandpaper strips every 500 revolutions.

3.13.8 Calculation

a) The wear resistance is defined as the algebraic sum of the Initial Point average of the samples and the Final Point average of the samples divided by 2 and multiplied by the correction factor (3.13.6.6)

Example:

Specimen	Initial Point	Final Point
1	600	750
2	575	725
3	625	775
Average	600	750

$$\text{Wear Resistance} = \frac{(600 + 750)}{2} \times 0.90$$

Copyright National Electrical Manufacturers Association
Provided by IHS under license with NEMA
No reproduction or networking permitted without license from IHS

Not for Resale

$$\text{Wear Resistance} = \frac{1350}{2} \times 0.90$$

Wear Resistance = 675 x 0.90

Wear Resistance = 607.5

607.5 rounded to the nearest 50 is 600

Wear Resistance = 600 cycles

b) The rate of wear (grams/100 cycles) can be calculated as follows and reported for informational purposes:

$$\text{Rate of Wear} = \frac{W1 - W2}{\text{Revolutions at FP}} \times 100$$

3.13.9 Factors Influencing the Accuracy of the Test

a) The abrader wheels should be periodically inspected for rounding of edges, and replaced as necessary.

b) Specimens should be flat or clamped flat on the turntable to ensure total contact across the face of the abrader wheels.

c) Certain solid colors utilize a barrier which should be taken into account when determining the end points. This barrier is part of the sublayer and should be considered part of it if significantly different in color from the decorative surface and distinguishable from it.

3.13.10 Test Report

The wear resistance shall be reported as the average of 3 specimens rounded to the nearest 50 revolutions.

3.14 FORMABILITY

3.14.1 Scope

This test measures the ability of postforming high-pressure decorative laminate (HPDL) to be formed.

3.14.2 Test Apparatus and Materials

The test apparatus and materials shall include:

a) A two element radiant electric heater, 120 volts, 1600 watts, or equivalent, mounted in a suitable metal lined trough. See Figure 3-18

b) A variable output transformer

c) Temperature indicator crayons rated 135° to 190°C (275° to 375°F) or an infrared thermometer

d) A timer

e) A machinist's micrometer

f) A wind screen as shown in Figure 3-19, or equivalent

g) Calibration strips of a solid white laminate (general purpose type) 50 x 200 x 1.1 ± 0.05 mm (2 x 8 x 0.045 ± 0.002 inch) with the 200 mm (8 inch) dimension cut parallel with the machine direction of the laminate. The backs of the strips shall be sanded to obtain the specified thickness.

Copyright National Electrical Manufacturers Association
Provided by IHS under license with NEMA
No reproduction or networking permitted without license from IHS
Not for Resale

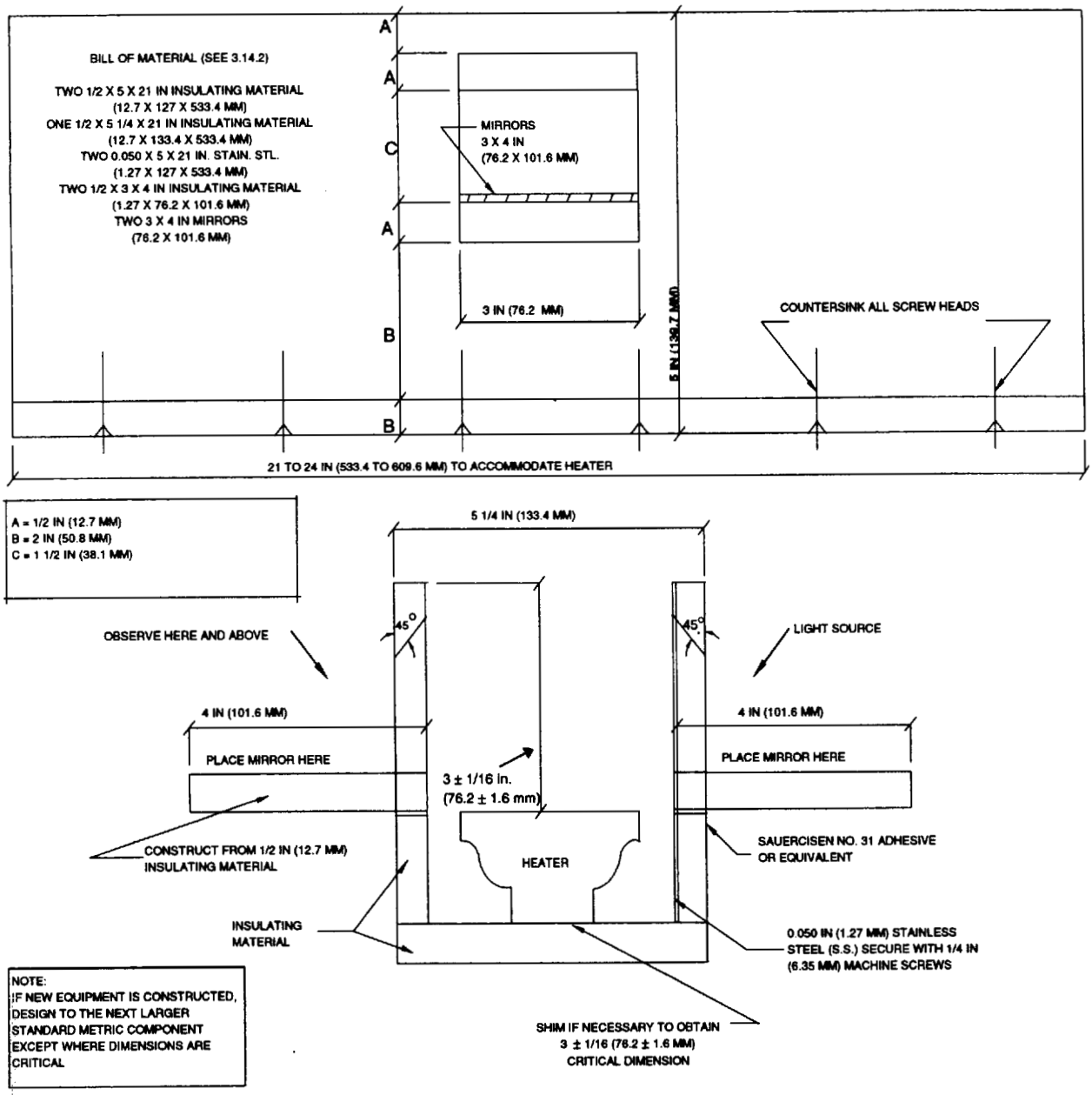

Figure 3-18
HEATING APPARATUS

Copyright National Electrical Manufacturers Association
Provided by IHS under license with NEMA
No reproduction or networking permitted without license from IHS
Not for Resale

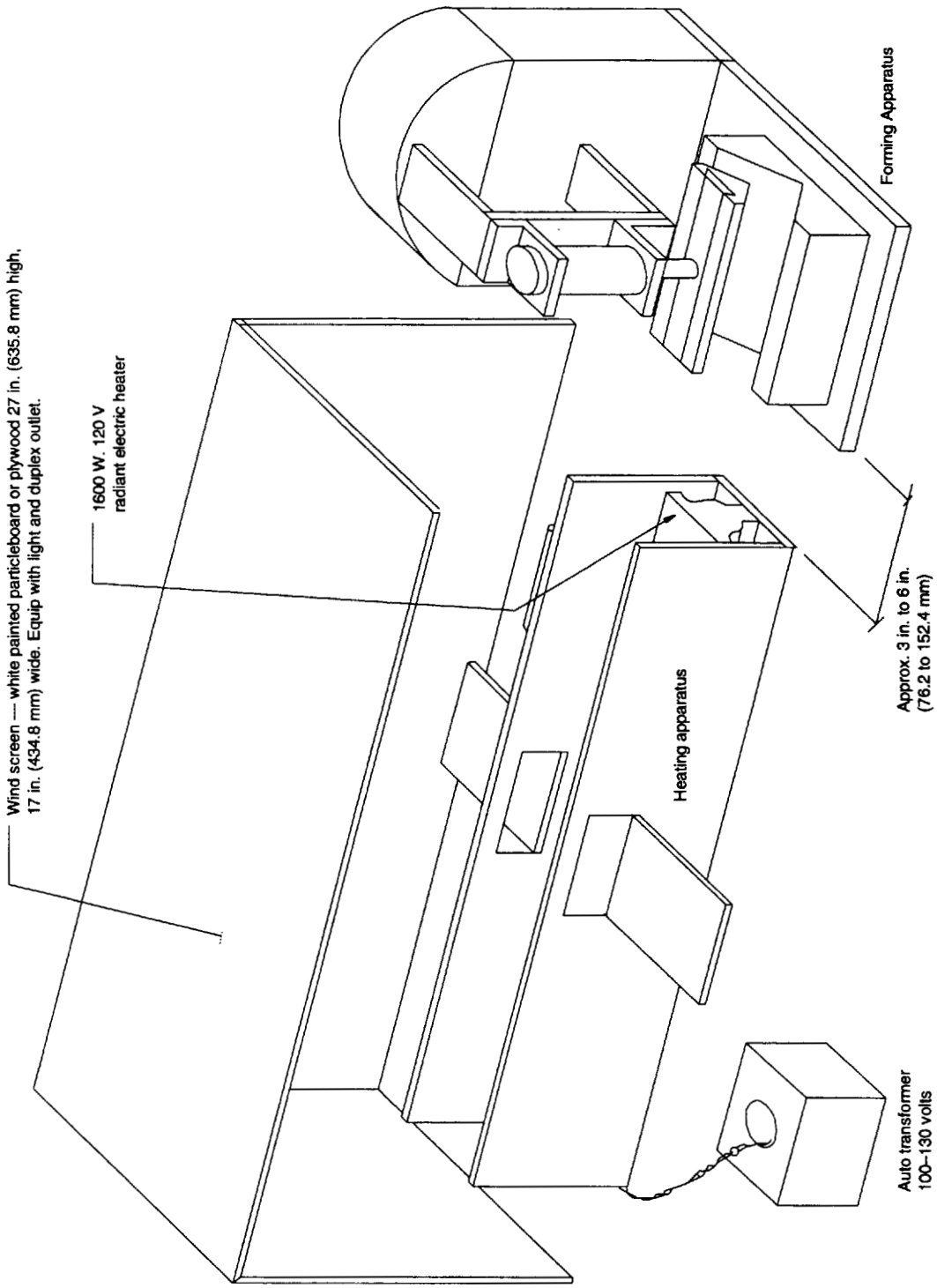

Figure 3-19
FORMABILITY AND BLISTER RESISTANCE APPARATUS

Copyright National Electrical Manufacturers Association
Provided by IHS under license with NEMA
No reproduction or networking permitted without license from IHS
Not for Resale

h) Radiused male forming blocks 13 mm (1/2 inch) and 16 mm (5/8 inch) and female forming blocks shall be machined from NEMA Grade C industrial laminate, hard maple, or similar close grained wood species. See Figure 3-20.

i) Forming apparatus (see Figures 3-21 through 3-23).

j) The parts of the test apparatus shall be located in a draft free area and in close proximity to permit rapid and smooth transfer of the test specimen from the heater to the forming block.

k) Overhead white fluorescent lights with bulb(s) positioned parallel to the line of sight and providing an intensity of 800 to 1100 lux (75 to 100 foot-candles) on the specimen surface.

3.14.3 Test Specimens

a) Test specimens shall be 50 x 200 mm (2 x 8 inches) x thickness, cut from the right edge, center, and left edge of the laminate. The edges of the specimens shall be sanded to remove minute cracks. Six specimens, three in the machine direction and three in the cross-machine direction shall be tested.

b) Test specimens shall be conditioned for at least 48 hours prior to the test at a temperature of 23° ± 2°C (73.4° ± 3.6°F) and a relative humidity of 50 ± 5 percent.

3.14.4 Calibration

a) Turn on the heating element 30 minutes prior to making any test. A voltmeter shall be used to check the applied voltage. The starting point voltage shall be 91 to 100 percent of the line voltage, e.g., 100 to 110 volts.

b) Mark the sanded back of several calibration test strips with a single centered line parallel to the 200 mm (8 inch) dimension, using a 163°C (325°F) temperature indicator crayon.

c) Place a calibration strip on the heating apparatus at the center, decorative face down, centering the marked line over the heater element. Watch the temperature indicator crayon mark on the test specimen for signs of melting. When the mark initially melts, remove the specimen from the heating apparatus. Using the calibration strips, adjust the input voltage with the transformer so that the rate of temperature rise required to reach 163°C (325°F) will be 1 second per 0.025 mm (0.001 inch) of thickness. The total variance shall be ± 2 seconds.

d) When three or more consecutive test strips reach the prescribed temperature/time curve as described in step c, begin the test.

e) Adjust the air cylinder pressure to produce 558.7 ± 44.5 Newtons (125.6 ± 10.0 pounds) of force.

For 1.1 mm (0.045 inch) thick laminate, the time to reach 163°C (325°F) equals 45 ± 2 seconds.

Commercially available infrared thermometers may be used in place of the temperature indicator crayons. When using the infrared thermometer record the temperature for the initial melt during the calibration procedure. This temperature may be used as the set point. The calibration of the thermometers should be in accordance with the instrument manufacturer's instructions.

3.14.5 Test Procedure

a) Measure the thickness of the test specimen with the machinist's micrometer and record it.

b) Using the temperature indicator crayon, mark the back of each test specimen with a single centered line parallel to the 200 mm (8 inch) dimension. Use the temperature indicator crayon recommended by the laminate manufacturer. In the absence of a manufacturer's recommendation, use a 163°C (325°F) crayon.

c) Place the test specimen, decorative face down, on the heating apparatus, centering the marked line over the heater element

Copyright National Electrical Manufacturers Association
Provided by IHS under license with NEMA
No reproduction or networking permitted without license from IHS
Not for Resale

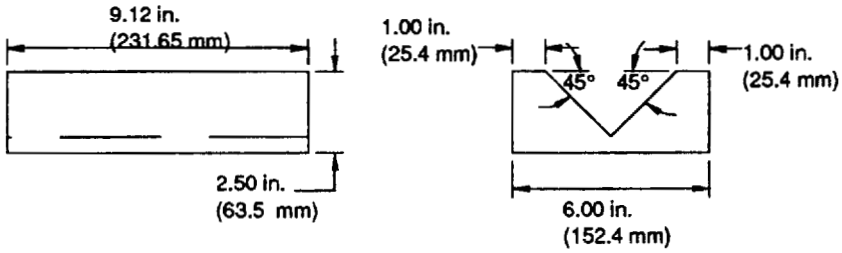

Side View End View

Recepticle

Material Hard Wood (Oak)

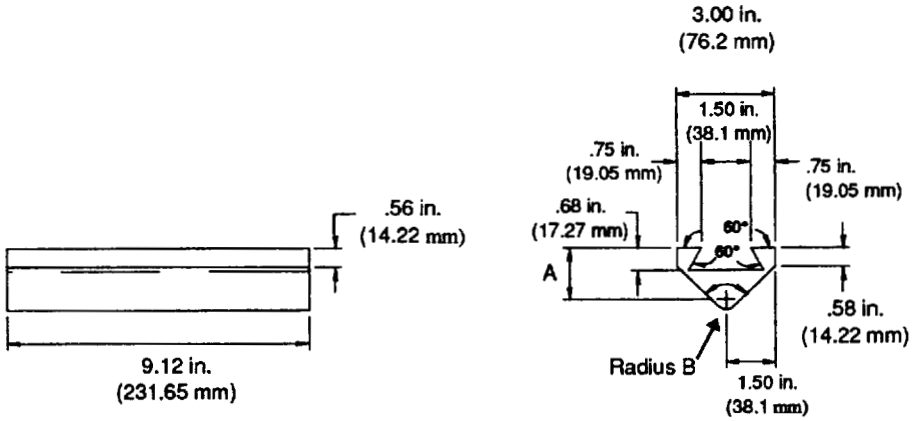

Side View End View

Ram Wedge

Material Phenolic Fiber

ONE SET CONTAINS ONE OF EACH	
A	B
1.82 in. (46.2 mm) 1.73 in. (43.9 mm) 1.64 in. (41.6 mm) 1.56 in. (39.62 mm) 1.47 in. (37.33 mm) 1.30 in. (33.02 mm)	2/16 in. (3.175 mm) ± 0.10 in. (0.254 mm) 3/16 in. (4.763 mm) ± 0.10 in. (0.254 mm) 4/16 in. (6.350 mm) ± 0.10 in. (0.254 mm) 5/16 in. (7.938 mm) ± 0.10 in. (0.254 mm) 6/16 in. (9.525 mm) ± 0.10 in. (0.254 mm) 8/16 in. (12.70 mm) ± 0.10 in. (0.254 mm)

NOTE:
If new equipment is constructed, design to the next larger standard metric component except where dimensions are critical.

Figure 3-20
RADIUS FORMING BLOCKS

Copyright National Electrical Manufacturers Association
Provided by IHS under license with NEMA
No reproduction or networking permitted without license from IHS
Not for Resale

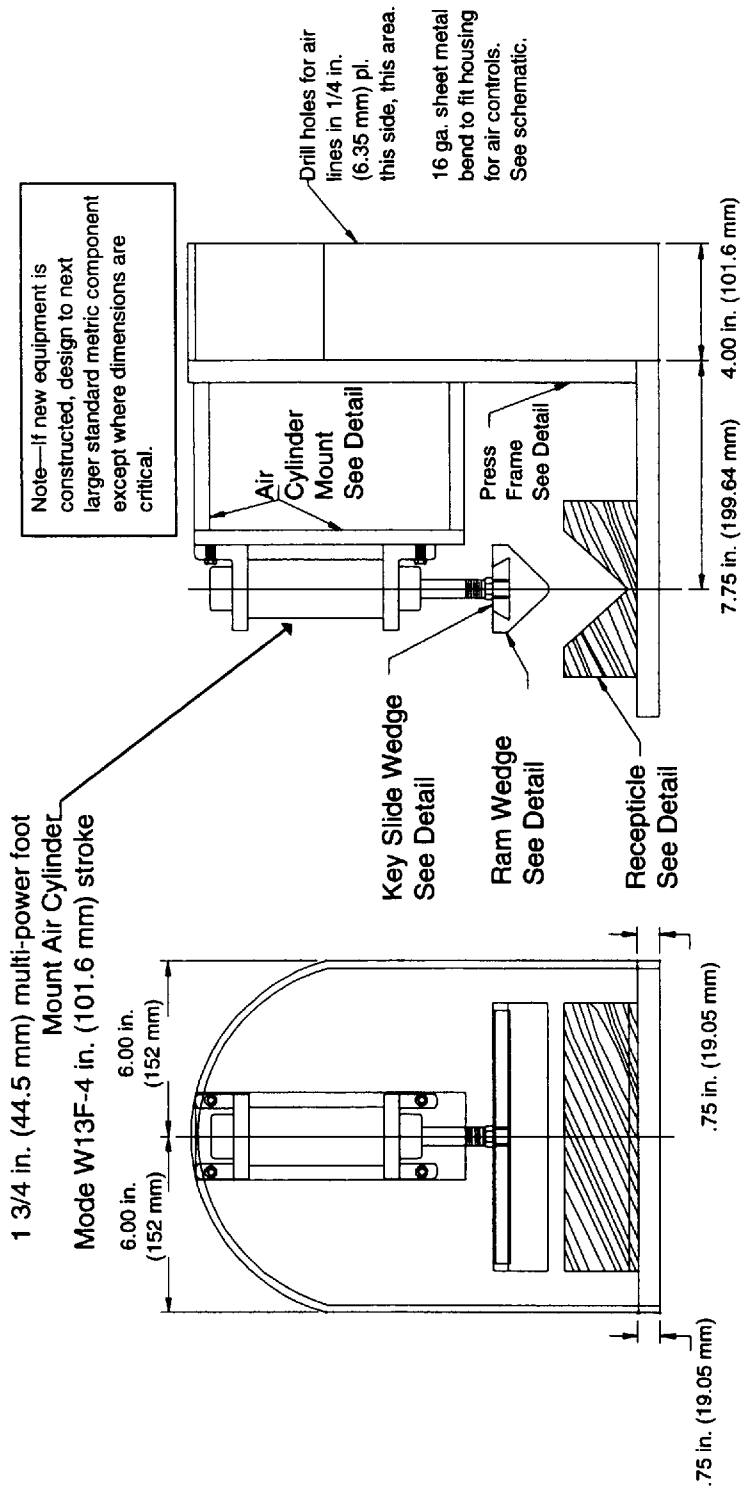

Figure 3-21
FORMABILITY APPARATUS

Copyright National Electrical Manufacturers Association
Provided by IHS under license with NEMA
No reproduction or networking permitted without license from IHS
Not for Resale

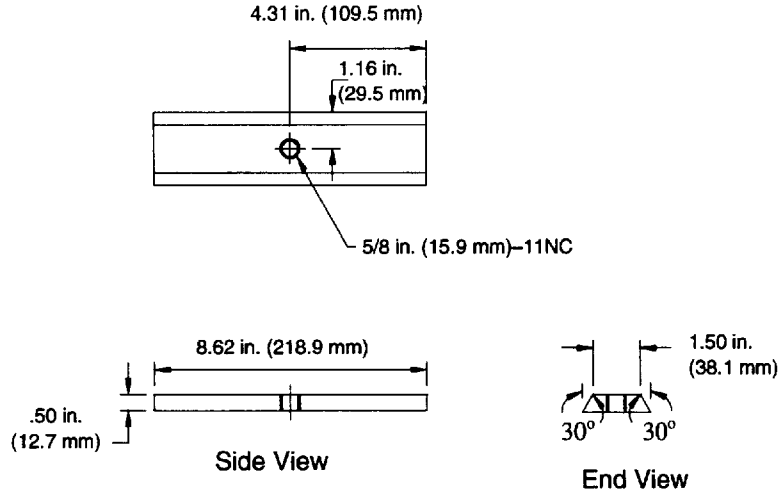

Key Slide Wedge
Material 1/2 in. (12.7 mm) Steel Plate

Note—If new equipment is constructed, design to the next larger standard metric component except where dimensions are critical.

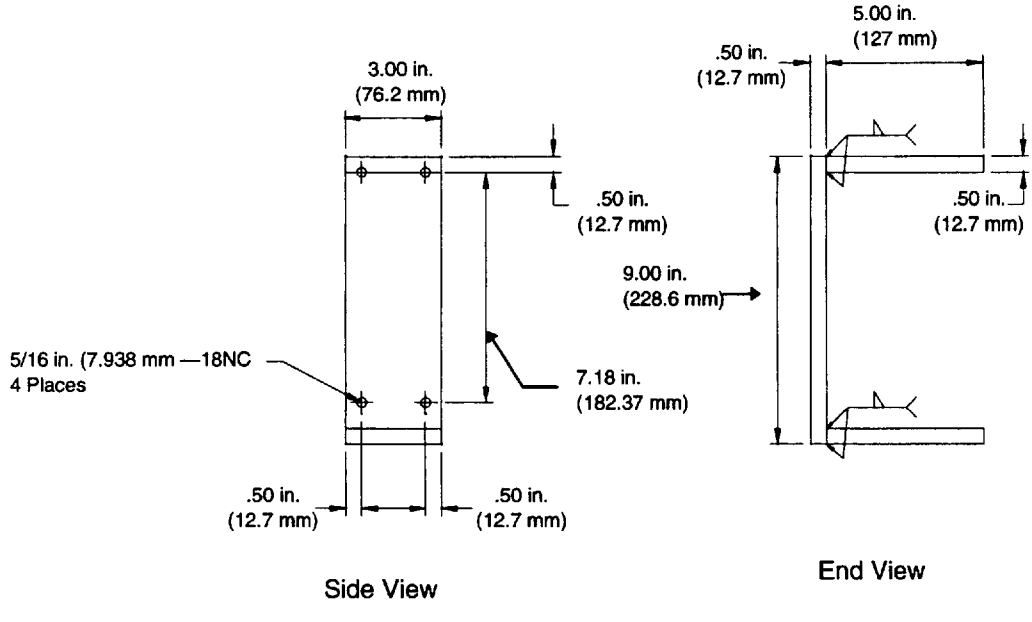

Air Cylinder Mount
Material 1/2 in. (12.7 mm) Steel Plate

Figure 3-22
KEY SLIDE WEDGE AND AIR CYLINDER MOUNT

Copyright National Electrical Manufacturers Association
Provided by IHS under license with NEMA
No reproduction or networking permitted without license from IHS
Not for Resale

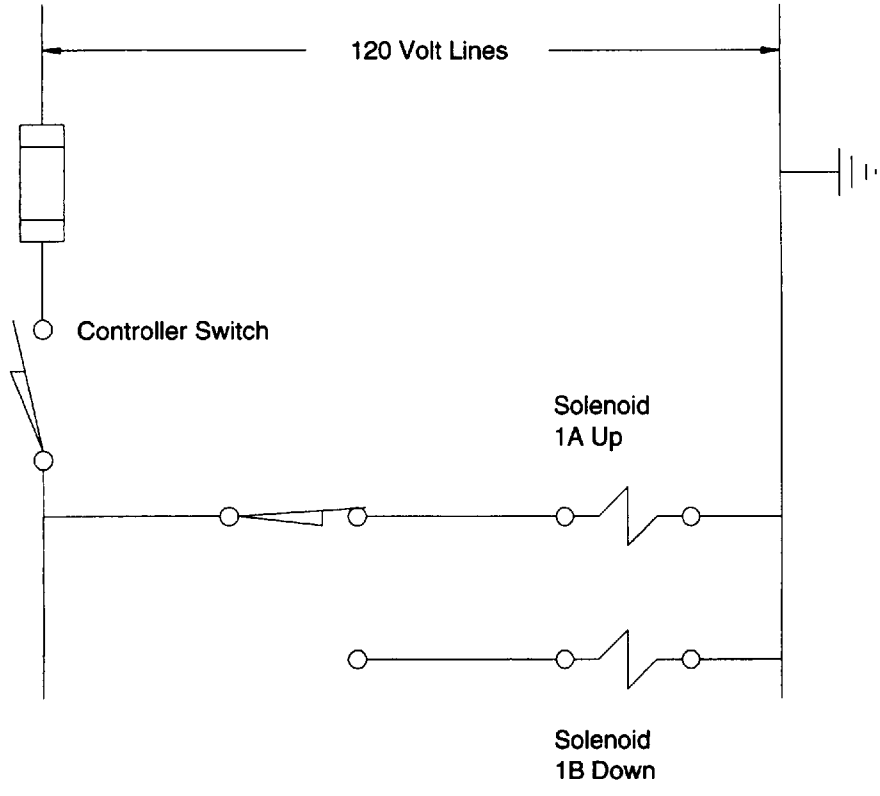

Electrical

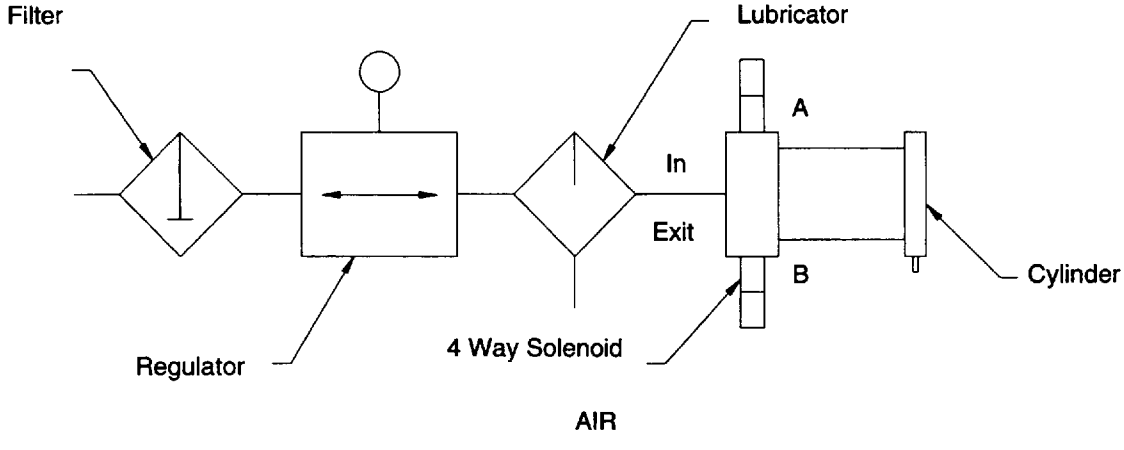

AIR

Figure 3-23
SCHEMATICS

Copyright National Electrical Manufacturers Association
Provided by IHS under license with NEMA
No reproduction or networking permitted without license from IHS
Not for Resale

d) Observe the temperature indicator crayon mark on the test specimen for signs of melting. When the mark initially melts, remove the specimen from the heating apparatus. Immediately place the specimen face down in the forming apparatus equipped with the proper radius forming block and form it.

e) Allow the formed specimen to cool in the closed forming apparatus at least 15 seconds. Remove and inspect the test specimen.

f) Record observations.

If an infrared thermometer is used instead of the temperature indicator crayon, the thermometer probe should be placed above the specimen to ensure that its beam target area is narrower than the width of the specimen. The manufacturer's instructions should be followed. The test sample should be removed from the heating apparatus when the calibration set point is reached and then proceed with the forming.

The closing time of the forming die after initial contact with the specimen should be approximately 1 second. The air cylinder exhaust valve may be adjusted to obtain the desired closing rate.

3.14.6 Test Report

Report that the specimens either "passed" or "failed."

a) "Passed" means that all of the test specimens formed to the prescribed minimum forming radius without cracking, blistering, crazing, or permanently discoloring.

b) "Failed" means that one or more of the test specimens did not form to the prescribed minimum forming radius without cracking, blistering, crazing, or permanently discoloring.

3.15 BLISTER RESISTANCE

3.15.1 Scope

This test measures the ability of postforming high-pressure decorative laminate (HPDL) to resist blistering during postforming operations.

3.15.2 Test Apparatus and Materials

The test apparatus and materials shall include:

a) A two element radiant electric heater, 120 volts, 1600 watts, or equivalent, mounted in a suitable metal lined trough. See Figure 3-18

b) A variable output transformer

c) Temperature indicator crayons rated 163°C (325°F) or an infrared thermometer

d) A timer

e) A machinist's micrometer

f) A wind screen such as shown in Figure 3-19, or equivalent

g) Calibration strips of a solid color white laminate (General Purpose type) 50 x 200 x 1.1 ± 0.05 mm (2 x 8 x 0.045 ± 0.002 inch) with the 200 mm (8 inch) dimension cut parallel with the machine direction of the laminate. The backs of the strips shall be sanded to obtain the specified thickness

h) Overhead white fluorescent lights with bulb(s) positioned parallel to the line of sight and providing an intensity of 800 to 1100 lux (75 to 100 foot-candles) on the specimen surface

Copyright National Electrical Manufacturers Association
Provided by IHS under license with NEMA
No reproduction or networking permitted without license from IHS
Not for Resale

3.15.3 Test Specimens

a) Test specimens shall be 50 x 200 mm (2 x 8 inches) x thickness, cut from the right edge, center, and left edge of the laminate. The 200 mm (8 inch) dimension shall be cut parallel with the machine direction of the laminate. Three test specimens shall be tested.

b) Test specimens shall be conditioned for at least 48 hours prior to the test at a temperature of 23° ± 2°C (73.4° ± 3.6°F) and a relative humidity of 50 ± 5 percent.

3.15.4 Calibration

a) Turn on the heating element 30 minutes prior to making any test. A voltmeter shall be used to check the applied voltage. The starting point voltage shall be 91 to 100 percent of the line voltage, e.g., 100 to 110 volts.

b) Mark the sanded back of several calibration test strips with a single centered line parallel to the 200 mm (8 inch) dimension, using a 163°C (325°F) temperature indicator crayon.

c) Place a calibration strip on the heating apparatus at the center, decorative face down, centering the marked line over the heater element. Watch the temperature indicator crayon mark on the test specimen for signs of melting. When the mark initially melts, remove the specimen from the heating apparatus. Using the calibration strips, adjust the input voltage with the transformer so that the rate of temperature rise required to reach 163°C (325°F) will be 1 second per 0.025 mm (0.001 inch) of thickness. The total variance shall be ± 2 seconds.

d) When three or more consecutive test strips reach the prescribed temperature/time curve as described in step c, begin the test.

For 1.1 mm (0.045 inch) thick laminate, the time to reach 163°C (325°F) = 45 ± 2 seconds.

Commercially available infrared thermometers may be used in place of the temperature indicator crayons. When using an infrared thermometer, its probe should be placed above the specimen to ensure that its beam target area is narrower than the width of the specimen. Record the temperature for the initial melt during the calibration procedure. This temperature should be used as the set point. The calibration of the thermometers should be in accordance with the instrument manufacturer's instructions.

3.15.5 Test Procedure

a) Simultaneously start the timer and place the test specimen, decorative face down, on the center of the heating apparatus.

b) Stop the timer when blistering occurs and record the time. Blistering shall be detected by visual or audible means, whichever occurs first.

3.15.6 Test Report

The blister resistance time in seconds shall be reported as the average of the test specimens.

3.16 SCUFF RESISTANCE

3.16.1 Scope

This test measures the ability of the surface of flooring type high wear high-pressure decorative laminate (HPDL) to maintain its original appearance when exposed to scuffing.

Copyright National Electrical Manufacturers Association
Provided by IHS under license with NEMA
No reproduction or networking permitted without license from IHS
Not for Resale

3.16.2 Test Apparatus and Materials

The test apparatus shall include:

a) Ballistic pendulum as described in Figures 3-24 through 3-27. Table 3-2 shall be used in conjunction with Figures 3-24 and 3-27.

b) Scuffing "heel" assembly as shown in Figure 3-27 shall be made of urethane, having a Shore "A" hardness of 85 ± 3.

c) Commercially available non-abrasive cleaner containing 4% butyl cellosolve.

d) Overhead white fluorescent lights with bulb(s) positioned parallel to the line of sight and providing an intensity of 800 to 1100 lux (75 to 100 foot-candles) on the specimen surface.

e) A PVAc (white glue) adhesive utilized in accordance with the manufacturer's instructions.

f) Particleboard that is 19 mm (3/4 inch) thick and 720 kg/m^3 (45 lb./ft^3) nominal density and sanded to thickness with 100 grit paper (Union Camp Uniflake Industrial "AA" Vinyl Grade).

3.16.3 Test Specimens

Test specimens shall be 140 x 200 mm (5-1/2 x 8 inches) x thickness. One specimen with the 200 mm (8 inch) dimension cut from the machine direction and one with the 200 mm (8 inch) cut from the cross machine direction shall be tested. All specimens shall be bonded to particleboard with PVAc adhesive. All bonded specimens shall be conditioned for at least 48 hours prior to the test at a temperature of 23° ± 2°C (73.4° ± 3.6°F) and a relative humidity of 50 ± 5 percent.

3.16.4 Test Procedure

a) Clean the surface of the test specimen with the cleaning solution and allow to dry.

b) Fasten the test specimen to the specimen plate holder.

c) Raise the pendulum arm to the prescribed height at an angle of 70° and release it. This action results in the striking edge of the scuffing "heel" striking the specimen with sufficient force to cause an impact tangential to the surface of the specimen, moving the specimen plate holder assembly downward while continuing to scuff the surface of the specimen. Before the pendulum returns, it shall be caught by hand to prevent it from striking the apparatus.

d) Remove the test specimen after it has been struck once and clean it with the cleaning solution.

e) Examine the cleaned test specimen by placing it, without preinspection, on a table and then view it at an eye-to-specimen distance of approximately 750 to 900 mm (30 to 36 inches) and at an angle of from approximately 45° to 75° from the horizontal (table surface). The specimen shall be rotated in the plane of the table and viewed from all directions. Direct sunlight or other angle light sources, which will accentuate or minimize the effect, shall be avoided.

f) The same test specimen shall be permitted to be retested by repositioning to ensure striking at a different spot.

3.16.5 Test Report

The scuff resistance shall be reported as one of the following:

a) No effect – no visible change

b) Moderate effect – any change in color, gloss or finish

c) Severe effect – surface is cracked, torn or ripped

Copyright National Electrical Manufacturers Association
Provided by IHS under license with NEMA
No reproduction or networking permitted without license from IHS
Not for Resale

Table 3-2
SCUFF TEST APPARATUS

Letter Codes	Part Description and Material	Figure Number	Quantity Required
A	Vertical Upright Support – 102 mm x 102 mm x 6 mm angle iron	3-24 & 3-25	2
B	Vertical Upright Support Upper Locking Bracket – 51 mm wide, 6 mm thick, flat steel	3-25	2
C	Horizontal Base – 203 mm x 57 mm x 1067 mm steel U-Beam	3-24	1
D	Pivot Support and Specimen Plate Holder – 54 mm x 200 mm x 16 mm steel plate machine ground flat	3-24	1
E	Pendulum Support Assembly with Pivot Rod – All steel 6 mm x 102 mm x 51 mm channel 25 mm steel plate 7	3-24 & 3-25	1
F	Pendulum Pivot Arm Connector – 108 mm x 76 mm x 51 mm steel block, 2.91 kg ± .09 kg	3-25	1
G	Pendulum Arm Steel drill rod 772 mm long, 25 mm diameter, 2.95 ± .09 kg, threaded 51 mm both ends	3-25	1
H	Heel Assembly – 1.59 kg ± .09 kg, 64 mm x 76 mm x 51 mm steel block, 64 mm diameter heel material	3-25	1
I	Urethane Heel – Shore "A" hardness of 85 ± 3, 13 mm thick x 64 mm diameter	3-25	1
J	Counterweight – Mild steel – 197 mm x 51 mm x 16 mm with 6 mm keyway	3-24	1
K	Balance Beam – Mild steel – 318 mm x 51 mm x 64 mm	3-24	1
L	Shaft – Mild steel – 16 mm diameter x 152 mm	3-24	1
M	Pillow Block Bearings – 16 mm shaft diameter	3-24	2
N	Stop plate – mild steel	3-24 & 3-25	1
Misc.	Bolts – 32 mm long x 10 mm diameter – .630 threads/mm Bolts – 51 mm long x 10 mm diameter – .630 threads/mm steel bolts Bolts – 19 mm long x 5 mm diameter – .8 threads/mm flat-head screws	Where noted	

Copyright National Electrical Manufacturers Association
Provided by IHS under license with NEMA
No reproduction or networking permitted without license from IHS
Not for Resale

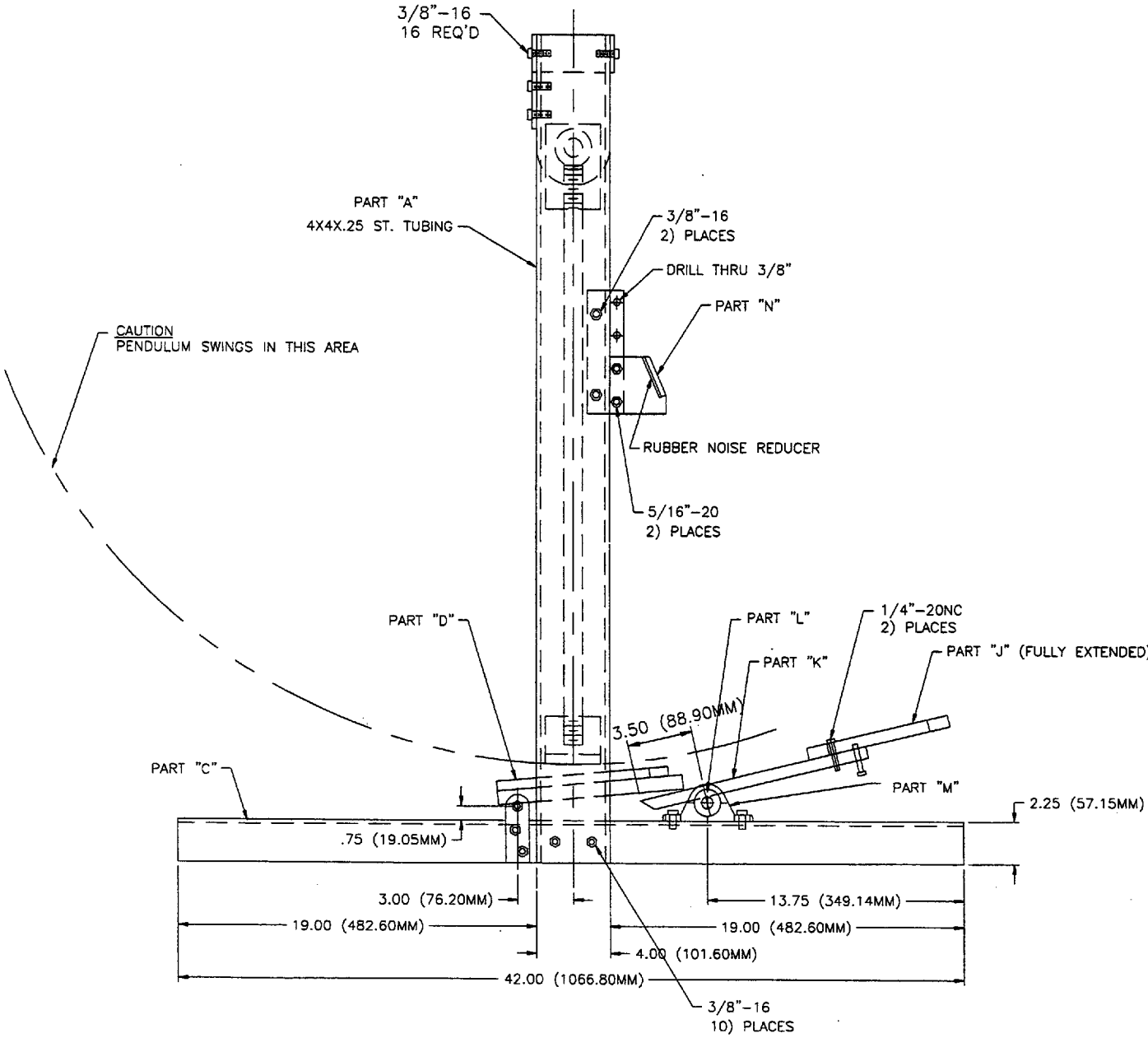

Side View

Note—If new equipment is constructed, design to the next larger standard metric component except where dimensions are critical.

Figure 3-24
SCUFF TEST APPARATUS – SIDE VIEW

Copyright National Electrical Manufacturers Association
Provided by IHS under license with NEMA
No reproduction or networking permitted without license from IHS

Not for Resale

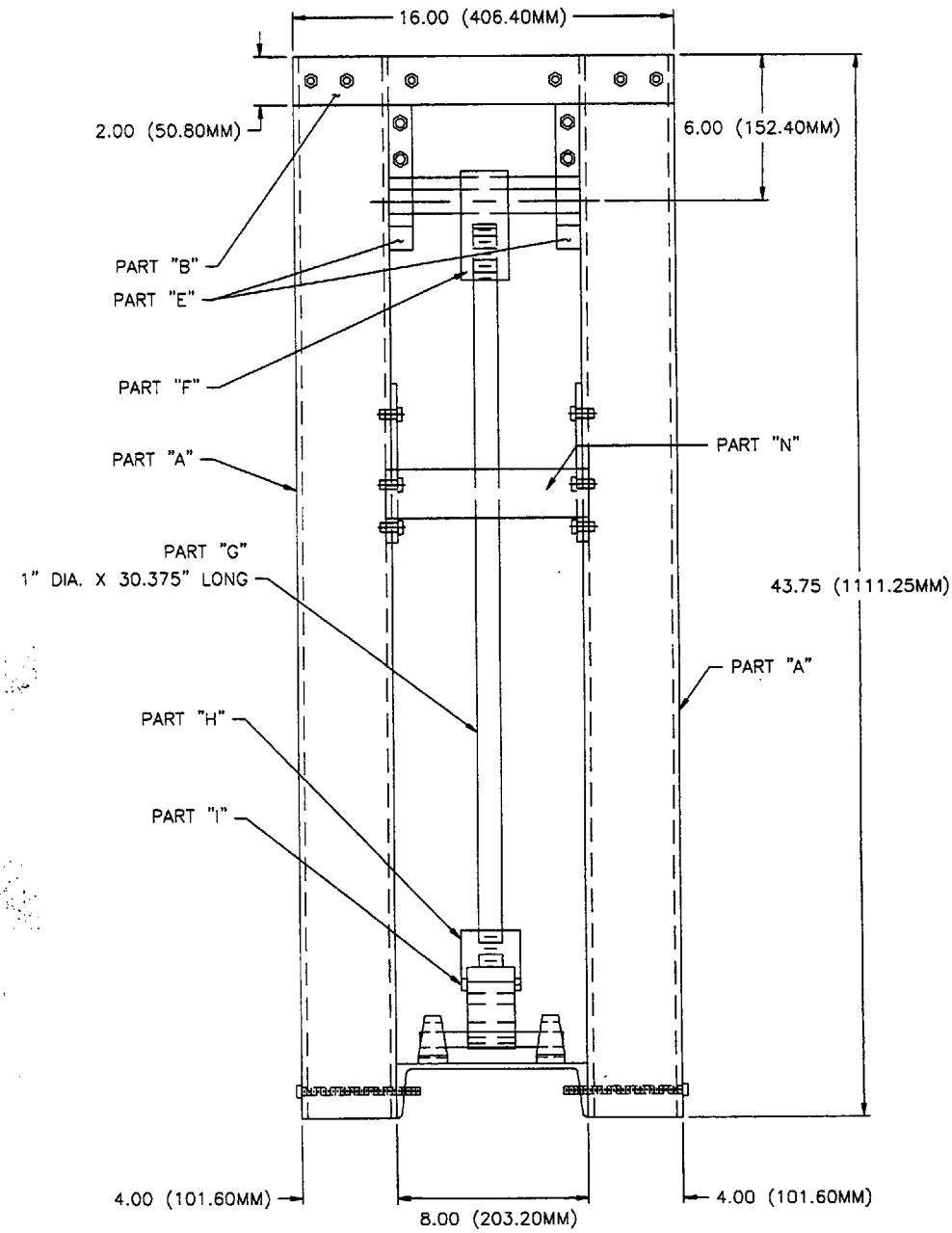

Note—If new equipment is constructed, design to the next larger standard metric component except where dimensions are critical.

Figure 3-25
SCUFF TEST APPARATUS – END VIEW

Copyright National Electrical Manufacturers Association
Provided by IHS under license with NEMA
No reproduction or networking permitted without license from IHS

Not for Resale

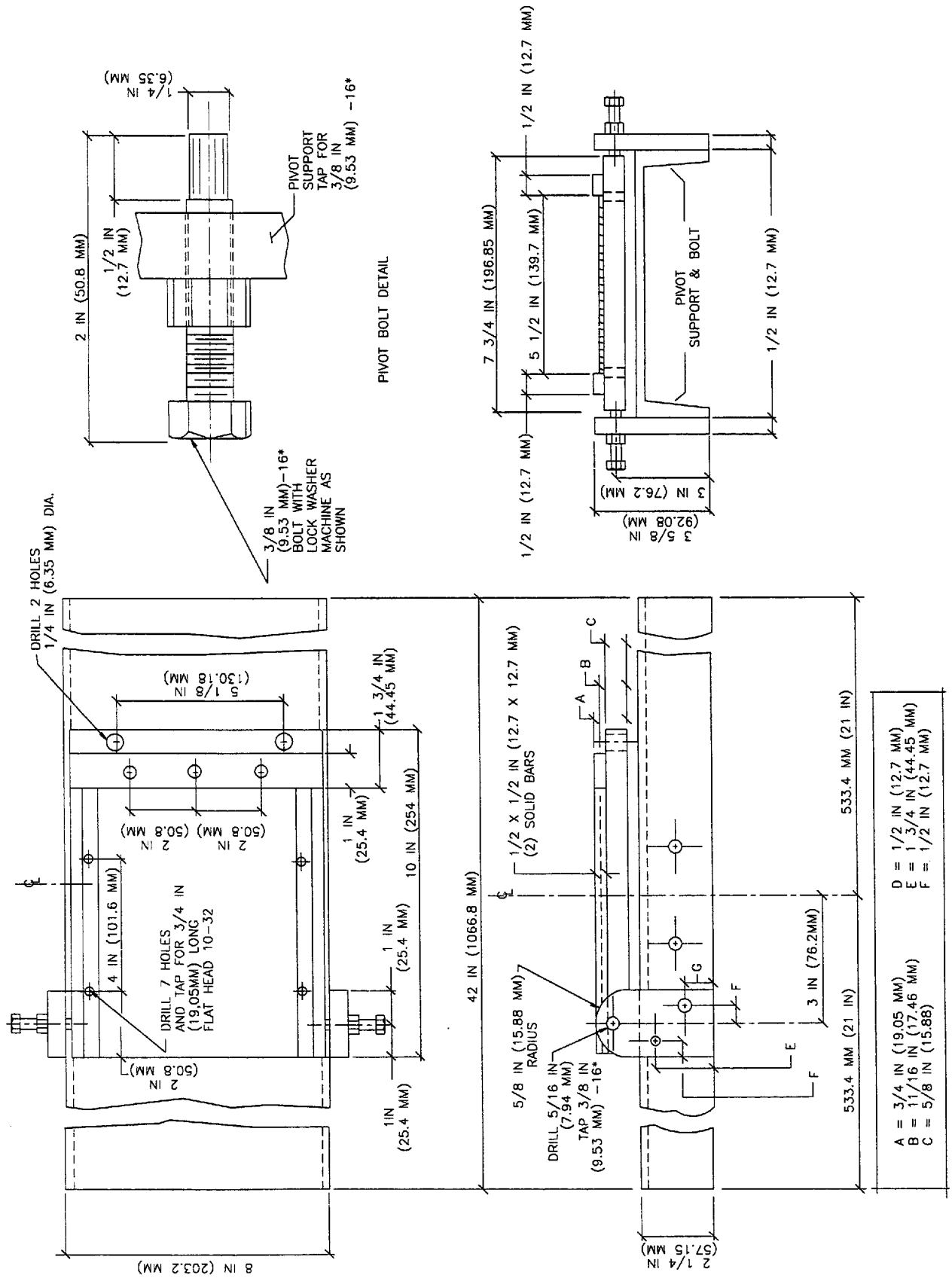

Figure 3-26
HORIZONTAL BASE

Copyright National Electrical Manufacturers Association
Provided by IHS under license with NEMA
No reproduction or networking permitted without license from IHS

Not for Resale

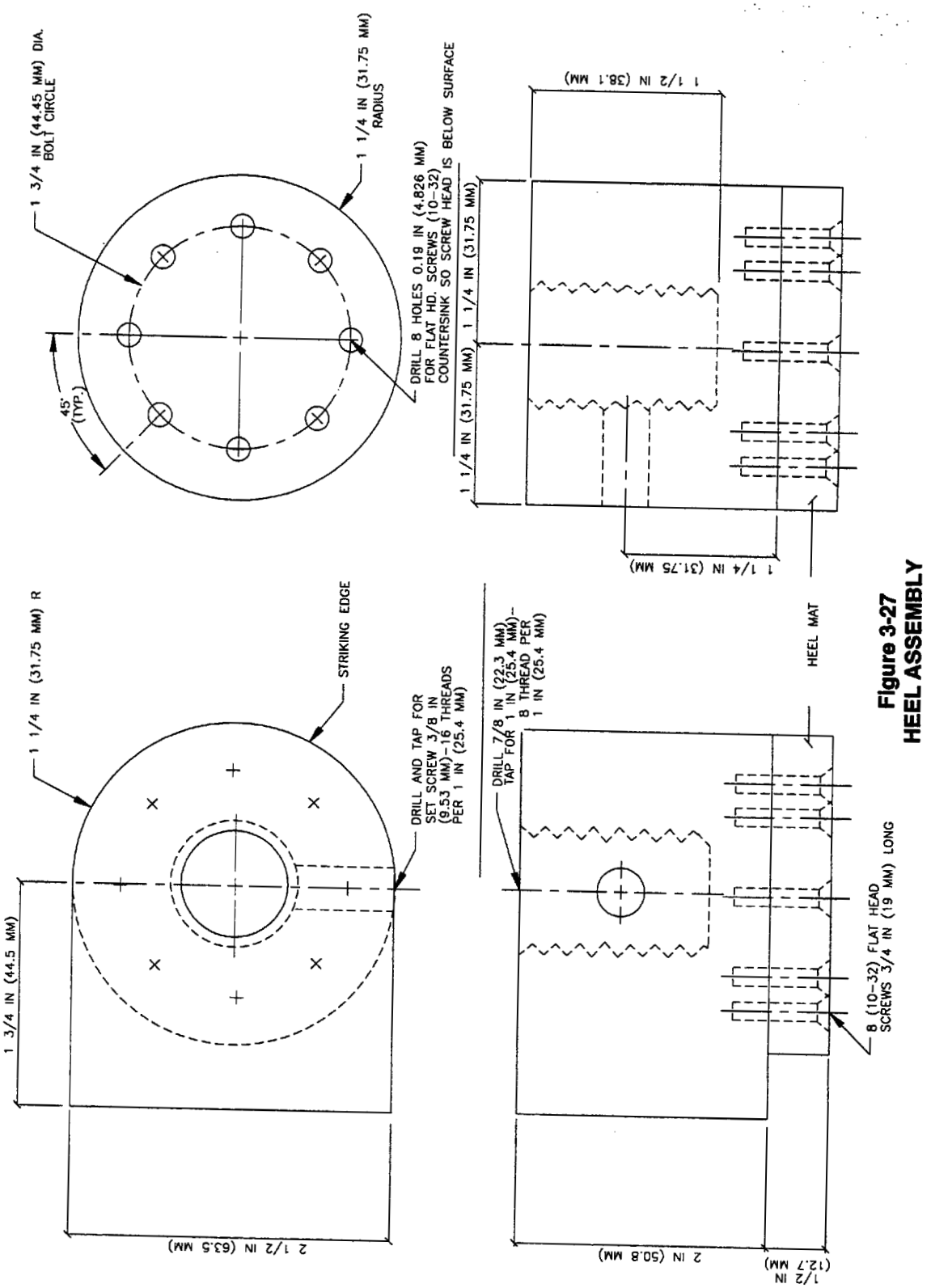

Figure 3-27
HEEL ASSEMBLY

Copyright National Electrical Manufacturers Association
Provided by IHS under license with NEMA
No reproduction or networking permitted without license from IHS
Not for Resale

Section 4
APPLICATION, FABRICATION, AND INSTALLATION

4.1 INTRODUCTION

The increasing use and application of high-pressure decorative laminates (HPDL) is testimony to their continued reputation for durable performance and appearance.

In recent years, the high-pressure decorative laminate industry has made many technical and aesthetic advances in its products; these are monitored and controlled by up-to-date test methods and improved manufacturing processes.

The aesthetic advances include new patterns and designs and decorative laminates that have sculptured three-dimensional surfaces, metal surfaces, and gloss. Some of these may not have the utilitarian latitude of service for horizontal applications that the regular surface finishes have and may be restricted for use (for example, vertical applications only). For recommendations on the use of a particular finish or surface the laminate manufacturer should be consulted.

By using the recommendations in this section as a starting point, users will find much to guide them in obtaining the most appropriate satisfactory installation. However, these recommendations are not intended to assume or replace the responsibility of the user to establish engineering design, practices, and procedures best suited to individual job conditions. This section will provide basic information on the fabrication and installation of decorative laminates and a better understanding of the product and its uses.

4.2 GENERAL DISCUSSION

High-pressure decorative laminates (HPDL) are used as surfacing material on counters, desk tops, cabinets, wall paneling, and furniture. The physical characteristics of the material should be considered in planning its fabrication and installation.

The properties of the finished laminate clad assembly will be influenced by:

a) Laminate selection (grade, finish, color, and pattern)
b) Adhesive
c) Substrate
d) Conditioning of the laminate and substrate
e) Fabrication techniques
f) Stress crack prevention
g) Balancing
h) Installation

Like wood, a high-pressure decorative laminate (HPDL) has a grain direction, and its dimensional behavior is similar to that of wood (see Figure 4-1). When humidity changes, the width of the laminate undergoes greater dimensional change than the length by a ratio of approximately two to one. Dimensional change is a characteristic found in varying degrees in all cellulose type materials. As humidity decreases the laminate sheet contracts, and when the humidity increases the laminate sheet expands.

Copyright National Electrical Manufacturers Association
Provided by IHS under license with NEMA
No reproduction or networking permitted without license from IHS
Not for Resale

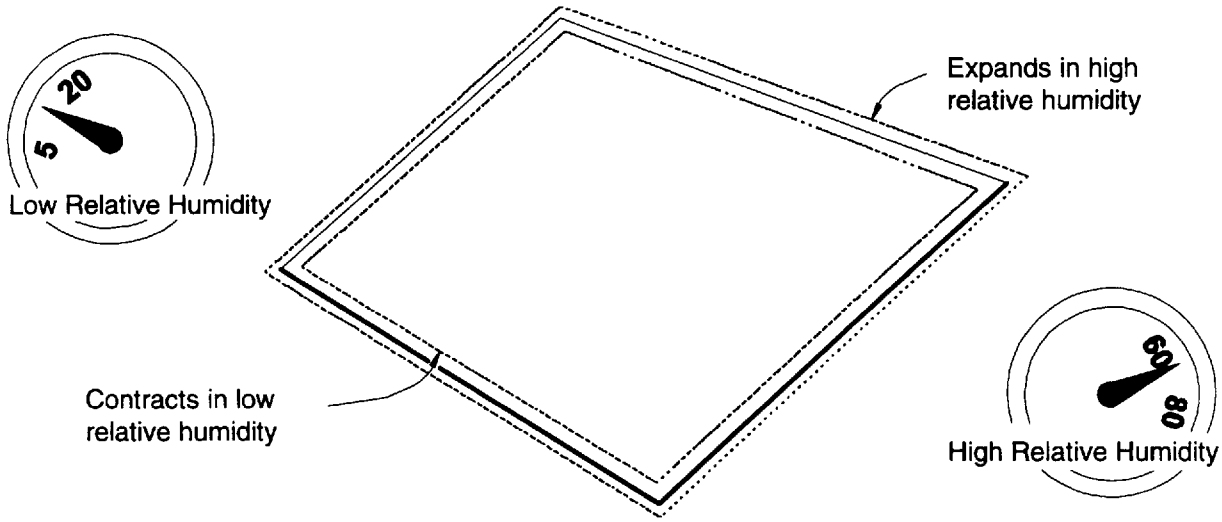

Figure 4-1
HUMIDITY CHANGES

4.3 MATERIALS

Three basic materials are involved in the fabrication and installation of high-pressure decorative laminates (HPDL). These are the laminate, the adhesive, and the substrate or supporting material.

4.3.1 High-Pressure Decorative Laminate

Laminates are classified in eight different types:

a) General purpose (both horizontal and vertical grades)
b) Postforming (both horizontal and vertical grades)
c) Flame retardant
d) High wear
e) Specific purpose
f) Cabinet liner
g) Backer
h) Other

The different types were engineered to meet specific needs, based on performance, economy, and use. For example, thin general purpose laminates are suitable for vertical applications such as cabinet doors and panels. Postforming laminates allow simple bends which cover edges and eliminate the need for seams between vertical and horizontal planes such as those found on a sink top or cabinet door. The flame retardant type is designed for the specific fire-rated classification in accordance with local code requirements. The general purpose type laminate is the most widely used since it is suitable for many applications and should be considered first. If another type is required, the supplier of the laminate should be consulted for recommendations as to the type of laminate to be used.

Backer sheets are used on the back of panel-assemblies to protect the substrate from humidity changes and to reduce warpage.

See Figure 4-2 for an illustration of some of these types.

Copyright National Electrical Manufacturers Association
Provided by IHS under license with NEMA
No reproduction or networking permitted without license from IHS
Not for Resale

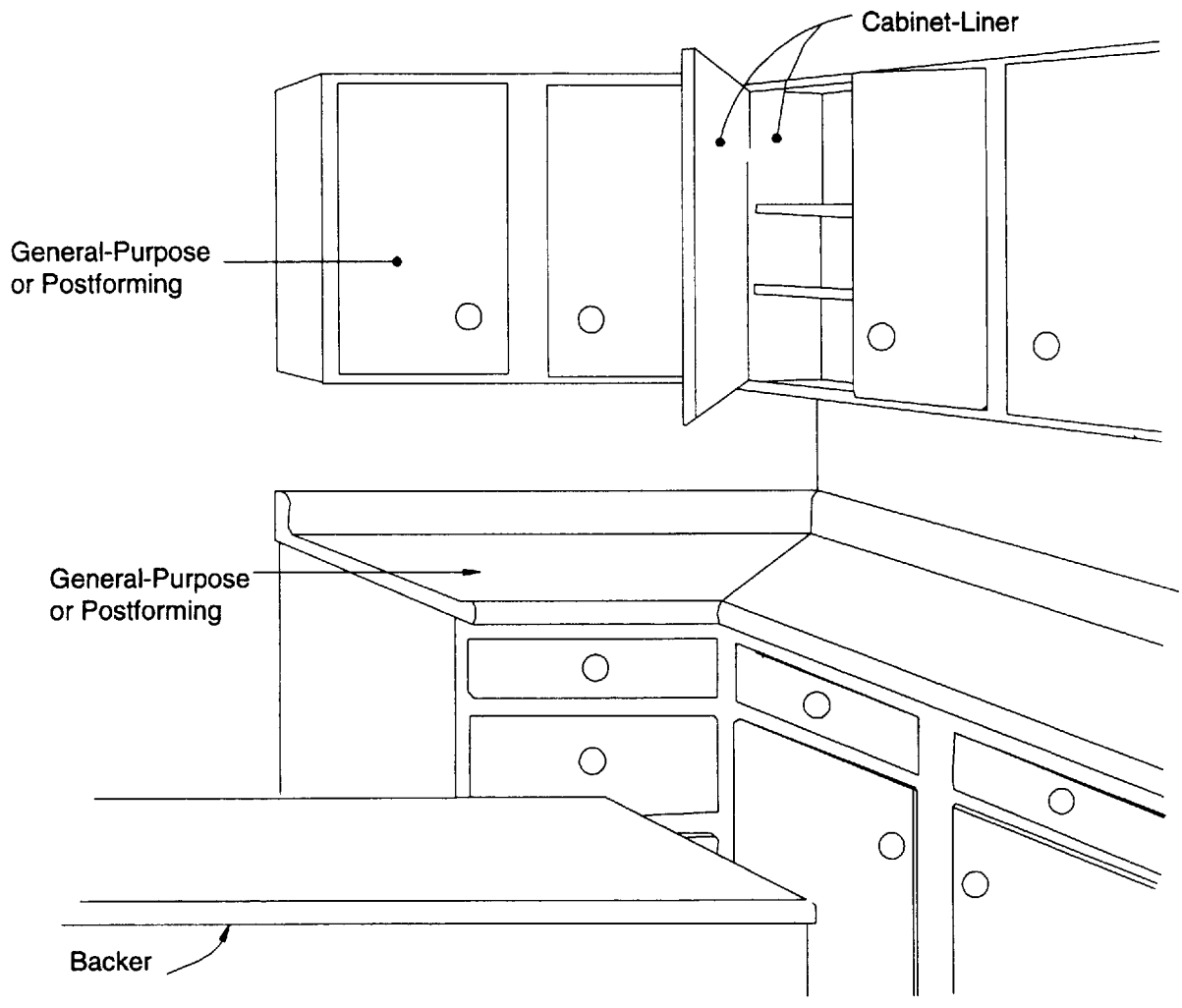

Figure 4-2
TYPICAL TYPES OF LAMINATE USE

4.3.2 Adhesives

A variety of adhesives have been found satisfactory for bonding decorative laminates to core materials. The choice of adhesive is based upon the service for which the assembly is intended and upon the bonding facilities available. In all cases, the adhesive manufacturer's instructions for use should be followed closely. Contact adhesives do not restrict the movement of the laminate caused by varying humidity conditions to the same extent as thermosetting adhesives. This characteristic should be kept in mind when selecting the adhesive for the application.

The following information for the individual types of adhesives is intended only as a supplement to the manufacturer's instructions.

4.3.2.1 Contact Types

Contact adhesives may be used for bonding laminates to a variety of cores. They are particularly useful for application to metal or other impervious surfaces. There are two primary types of contacts; solvent-based and water-based. Water-based adhesives are not suitable for bonding laminates to steel or

Copyright National Electrical Manufacturers Association
Provided by IHS under license with NEMA
No reproduction or networking permitted without license from IHS
Not for Resale

iron surfaces. The solvent or the water must be evaporated before satisfactory bonding can be accomplished.

Contact adhesives should be uniformly applied to both surfaces to be bonded by a brush, sprayer, or paint roller. Brush application is the least desirable method because of the difficulty in obtaining uniform application.

These adhesives have high immediate bond strength, and once contact has been made, the components cannot be moved.

4.3.2.2 Polyvinyl Acetate Types (White Glue)

Polyvinyl acetate (PVAc) emulsion adhesives may be used for bonding laminates to wood substrates where resistance to moisture and high heat are not required in the application (e.g., furniture, kitchen cabinets, and office partitions). They may be both room temperature and hot pressed setting adhesives requiring only that the water in the emulsion be absorbed by the components. Catalyzed PVAc offers improved moisture and heat resistance.

4.3.2.3 Thermosetting Types

a) Urea-formaldehyde adhesives are satisfactory for most applications. They can be used for room temperature bonding or for "hot" bonding. Hot bonding may tend to increase panel warpage, and a backer laminate should be used to reduce warpage. When hot bonding, the temperature should not exceed 85°C (185°F) for best results.

b) Resorcinol and phenol-resorcinol adhesives are recommended for use when moisture resistance and heat resistance are required. They may be used in either hot-pressing or room temperature bonding. Phenol-resorcinols are sometimes used as a pre-impregnated adhesive sheet in a hot-pressing operation. Resorcinols can be used with fire rated laminates to meet specific fire rated classifications.

c) Epoxy adhesives are liquids with no volatile components. They have good gap-filling and low shrinkage properties and are used mainly for bonding laminates to impervious cores such as steel. They should be catalyzed for use in either hot or room temperature bonding operations.

4.3.2.4 Hot Melt Types

Hot melt adhesives are suitable for use only in edge banding operations because of their low heat resistance. It is recommended that the particular grade adhesive chosen should have a minimum softening point of 65°C (150°F). Most hot melt manufacturers recommend a primer be applied to the back of the high-pressure decorative laminate (HPDL) prior to bonding. The adhesive manufacturers' recommendation for environmental conditions during application should be closely followed due to the application temperature sensitivity of the adhesive.

4.3.2.5 Urethane Types

Urethane adhesives are liquids with 100% solids and no volatile components. They have good gap-filling and low shrinkage properties and are used mainly for bonding laminates to impervious cores such as steel. There are various hot-melt urethane type adhesives which are utilized for bonding to medium density fiberboard. These adhesives may be either moisture cured or catalyzed and may be pressed in either hot or room temperature bonding operations.

4.3.3 Substrate

Good quality particleboard and medium or high density fiberboards are satisfactory for use as substrates since they supply the degree of rigidity needed to support the laminate and offer a suitable face for bonding. Many particleboards are engineered for flatness. These boards have, for example, strata of

Copyright National Electrical Manufacturers Association
Provided by IHS under license with NEMA
No reproduction or networking permitted without license from IHS
Not for Resale

varying chip size with the finer chips at the surface. Their dimensional movement is similar to that of high-pressure decorative laminate (HPDL).

The face of the substrate should be sanded smooth and be free from grease, wax, dust, or other contaminants which would interfere with adhesion. It should also be free of chips or other foreign matter which might show through the decorative surface after bonding.

Plywood may be used in some applications, but its dimensional movement is significantly less than high-pressure decorative laminate (HPDL). This may result in potential panel warpage, stress cracking, and open seams.

It should be noted that certain properties of the assembly are influenced by the substrate. Plaster board, gypsum board, plaster, concrete, and similar materials are not recommended because their internal bond strength is not sufficient for this application.

4.3.4 Factors Affecting Bonded Assemblies

Some factors that affect bonding are shown in Figure 4-3.

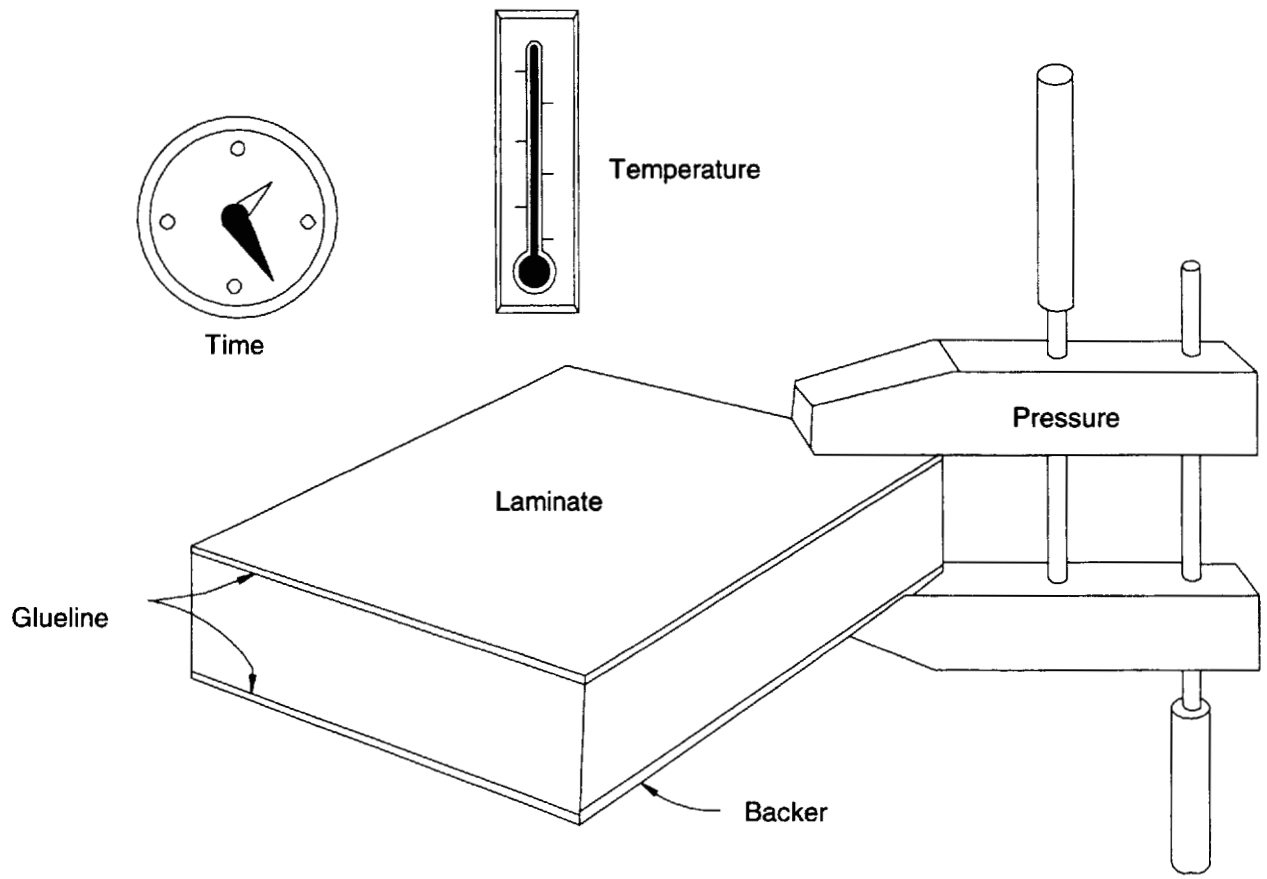

Figure 4-3
FACTORS AFFECTING BONDED ASSEMBLIES

Copyright National Electrical Manufacturers Association
Provided by IHS under license with NEMA
No reproduction or networking permitted without license from IHS
Not for Resale

Causes and recommendations for avoiding failures are:

a) Insufficient amount of adhesive on either or both of the surfaces to be bonded—When ready for bonding, the spread film of most contact adhesives will exhibit a uniform semi-gloss appearance over the entire surface of the materials to be bonded. Marked variation in appearance will generally indicate an improper or nonuniform adhesive spread. The substrate can generally be seen more readily through those areas where insufficient adhesive has been applied. If this occurs, recoating the surfaces should achieve a uniform coating. Double coating the edges with adhesive is advisable because of the higher porosity of the substrate edge.

b) Insufficient bonding pressure—To ensure intimate contact necessary for an adequate bond, sufficient pressure should be applied over the entire area using as much pressure as possible without damaging the assembly. Pinch rollers (rotary press) and heavy weighted rollers are ideal. Hand pressure rolling is adequate providing the operator exerts maximum pressure by means of a two-handled or single long handled roller. The rollers should be of steel or hard solid rubber (50–80 durometer) and not over 75 mm (3 inches) wide. Hand rolling should be done from the center to the edges to ensure the removal of all air bubbles. The edges should be rolled twice.

c) Bonding when adhesive surfaces are over-dry or under-dry—Care should be taken to follow the manufacturer's recommendations concerning the allowable tack range of the adhesive. If assembly is made before the adhesive is dry or after the allowable open time is exceeded an unsatisfactory bond may result.

d) Bonding of surfaces under 21°C (70°F)—Unless otherwise indicated by the manufacturer, the temperature of the gluing area and all materials should be 21°C (70°F) or above.

e) Bonding of surfaces when humidity is too high—Experience has shown that when the relative humidity is above 80 percent at temperatures of 21°C (70°F) or lower, moisture may condense on the surface during drying (known as "blushing") and will prevent an acceptable bond. Hot spray or forced air drying may be used to help prevent this condition.

f) Improperly prepared or dirty gluing surfaces—The surfaces should be clean, dry, and free of oils or other contaminants, such as dust, loose paint particles, and so forth. The adhesive film should have full contact with the surface to which it is applied in order to give maximum adhesion.

g) Adhesive not agitated or stirred thoroughly—The adhesive should always be stirred or agitated before use. This is particularly necessary with large containers.

h) Field bonding of oversized sheets—It is recommended that the maximum sheet size used for vertical field application be limited to 610 x 2400 mm (2 x 8 feet). If larger panels are required, these should be fabricated in the shop.

4.4 CONDITIONING AND STORAGE OF MATERIALS PRIOR TO FABRICATION

Materials should be properly conditioned before they are used. Conditioning should make allowances for the geographical location in which fabrication or installation takes place. For example, end products which are produced and used in the Southeastern United States are not as susceptible to shrinkage of the laminate with its attendant problems, as are articles used in northern climates. This is due to the fact that in the Southeast, the average yearly humidity is higher and the temperature does not vary as widely. Similarly, installations in the Southwest, which normally has low humidity, are not as likely to be affected by changes in the length and width of the laminate after fabrication. In these areas, normal conditioning of the component parts for 48 hours prior to fabrication at the prevailing climatic conditions is usually sufficient for the satisfactory fabrication and installation.

However, end products are now frequently fabricated in one area of the country and marketed in a distant area. For example, a wardrobe may be fabricated in a location where temperature and humidity are both high and then be shipped into an area where they are both low. The laminate will tend to reach moisture equilibrium with the new environment and shrink. In such cases, it is advisable to dry the

Copyright National Electrical Manufacturers Association
Provided by IHS under license with NEMA
No reproduction or networking permitted without license from IHS
Not for Resale

components before fabrication of the end product, and the use of a thermosetting adhesive is highly recommended.

Allow high-pressure decorative laminate (HPDL)and the substrate to acclimate for at least 48 hours at the same ambient conditions. Optimum conditions are approximately 24°C (75°F) and a relative humidity of 45 to 55 percent. Provision should be made for the circulation of air around the components.

Laminate sheets should be stored horizontally with the top sheet turned face down and a caul board placed on top to protect the material from possible damage and reduce the chance of warpage. Warped laminate sheets can be used unless the warp is so great that they cannot be properly fed through glue spreading or bonding equipment. Warp in the laminate sheet prior to bonding is not a cause of warp in the finished panel.

Stored laminate stock should be rotated such that older sheets will be used first. Laminate sheets should be protected from moisture, and should never be stored in contact with the floor or outside wall.

Always carry laminate sheets vertically. Handle full size sheets carefully to avoid breakage or injury. It is recommended that 2 people carry full size sheets. Be careful when moving sheets so as not to strike them against anything that could damage the decorative surface or the edges. Always lift sheets from one point to another, never slide sheets on their decorative surface.

4.5 FABRICATION TOOLING

The proper types of tools for fabricating decorative laminates may be obtained from many local tool suppliers. The following information is intended only as a supplement to their recommendations.

4.5.1 Sawing

To avoid chipping, it is important that the saw blade teeth cut into the decorative face.

4.5.1.1 Band Sawing

A band saw is recommended for curved or straight cuts when smooth edges or close tolerances are not required. For smooth edges on curved cuts, the part should be cut oversized and finished by routing, filing, or sanding.

A woodworking or metal cutting band saw blade may be used. Nineteen to 20 gauge carbon steel blades or hardened steel blades with soft backs should be used, with teeth ranging from 16 to 18 points per inch. Contour cutting requires a blade width of 6.35 to 12.70 mm (1/4 to 1/2 inch).

Straight cutting requires a blade width of 25.4 to 44.5 mm (1 to 1-3/4 inch). The teeth should have a medium set for straight cuts and a heavy set for contour cuts. The amount of set depends upon the radius of the cut required. The teeth should be kept sharp at all times. Adjust saw speed to maintain 1524 to 2438 surface meters (5000 to 8000 surface feet) per minute, feeding the work into the blade at a rate only as fast as it will cut without forcing the saw.

4.5.1.2 Circular Sawing

a) Floor or bench saws have been shown to be satisfactory. Material should be supported near the point of blade contact to avoid vibration that causes chipping. A triple chip grind tooth configuration is recommended for blades. In general, the blades illustrated in Figure 4-4 and meeting the conditions of Table 4-1 have been found to be satisfactory. Both tungsten carbide and diamond tip blades have shown to be excellent tools for sawing high-pressure decorative laminate (HPDL).

Copyright National Electrical Manufacturers Association
Provided by IHS under license with NEMA
No reproduction or networking permitted without license from IHS
Not for Resale

b) Powered circular hand saws with 60 carbide tipped teeth may be used for rough cutting. If used, the teeth should cut into the decorative face of the laminate in order to avoid excessive chipping. This means the laminate should be cut in the face-down position.

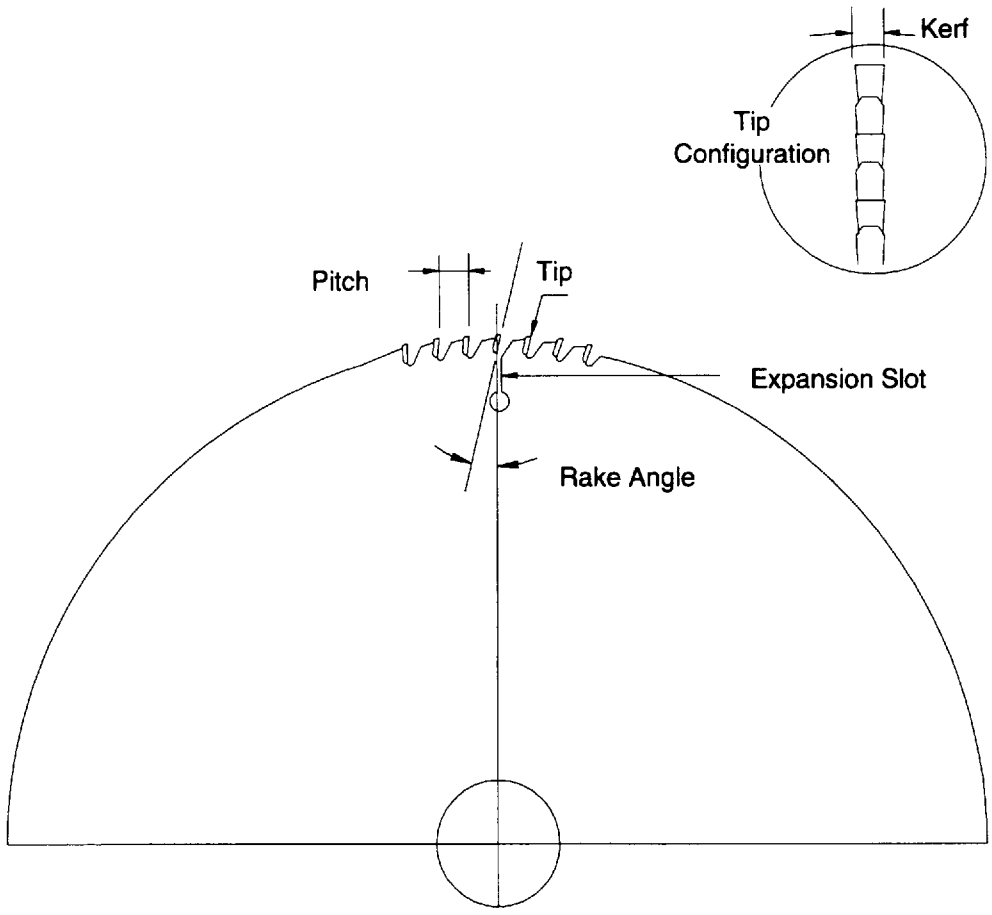

Figure 4-4
SAW BLADES

Table 4-1
TYPICAL BLADES

Parameter	Unbonded Laminate	Bonded Panel—19 mm (3/4 in)
Diameter	203.2 to 355.6 mm (8 to 14 in.)	203.2 to 355.6 mm (8 to 14 in.)
Speed per minute	2438 to 4572 m (8000 to 15000 ft.)	2438 to 4572 m (8000 to 15000 ft.)
Pitch	10.59 mm or less (0.417 in. or less)	13.21 mm or less (0.520 in. or less)
Rake angle	10 to 15 degrees	10 to 15 degrees
Kerf	1.74 to 2.79 mm (0.0684 to 0.110 in.)	2.39 to 3.43 mm (0.094 to 0.135 in.)

Copyright National Electrical Manufacturers Association
Provided by IHS under license with NEMA
No reproduction or networking permitted without license from IHS
Not for Resale

4.5.2 Routing

Routing may be done with electric or air powered routers. Cutters should be carbide tipped. The speeds recommended are the same as those used in standard woodworking practices. Router speed should be 16000 to 22000 rpm. It is important to use a router having adequate horsepower to maintain cutting speeds (based on the type and amount of material to be cut). For special edge trimming, very high-speed routers are available which produce smooth-edge chip-free work.

Sharpness of the router cutters should be maintained.

4.5.3 Sanding

Belt sanders may be used to flush the self-edge before the laminate top is applied. However, care should be taken to direct the sanding operation away from or parallel to the decorative surface.

4.5.4 Drilling

Decorative laminates can be drilled using an electric drill with the more common types of drill bits (e.g. high speed steel, twist drill, forstener, or brad point bits). Large holes can be drilled using a hole saw, flycutter, or can be plunge cut with a router and template. For machine drilling (drill press) a high speed straight shank twist drill is satisfactory.

To prevent stress cracking, the drill diameter should always be 0.05 mm (0.002 inch) larger than the specified diameter of the hole. Regardless of the diameter of the hole, all material being drilled should be backed up with wood to prevent breakout at the bottom of the drilled hole.

4.6 GENERAL RULES FOR FABRICATION AND INSTALLATION

4.6.1 Fabrication in the Shop

Good fabrication techniques indicate the following basic guidelines:

a) Storage conditions—A primary consideration of the fabricator should be the proper storage and conditioning of component materials. Both the laminate and the substrate should be conditioned for a minimum of 48 hours at a temperature between 21° to 24°C (70° to 75°F) and a relative humidity of 45 to 55 percent (see Figure 4-5) prior to bonding.

b) Control of the glue line—Control of the glue line is another consideration, and the thickness and uniformity of spread should be given constant attention. The substrate (and, in the case of contact adhesives, the laminate) should be coated with adhesive over the entire area where contact will be made. Spot bonding should never be used.

c) Adhesives—Specific conditions are recommended by each adhesive manufacturer and these conditions should be followed.

   1) Contact—Contact adhesives are widely used in the laminate industry. They require no expensive press, and even large pieces can be field applied. Contact adhesives can be applied by brush, roller, hand spray, or automated spray. They are ideal for postforming since they are heat reactivated, and since they are relatively water resistant, are good for countertop applications. Flammable, non-flammable, and water base formulations are available. Contact adhesives are good for laminating nonporous surfaces. Drawbacks of contact adhesive in comparison to many other types of adhesives include lower heat resistance, reduced resistance to stress crack and shrinkage due to their elastomeric nature, thickness of glue line, and toxic and/or flammable vapors.

Copyright National Electrical Manufacturers Association
Provided by IHS under license with NEMA
No reproduction or networking permitted without license from IHS
Not for Resale

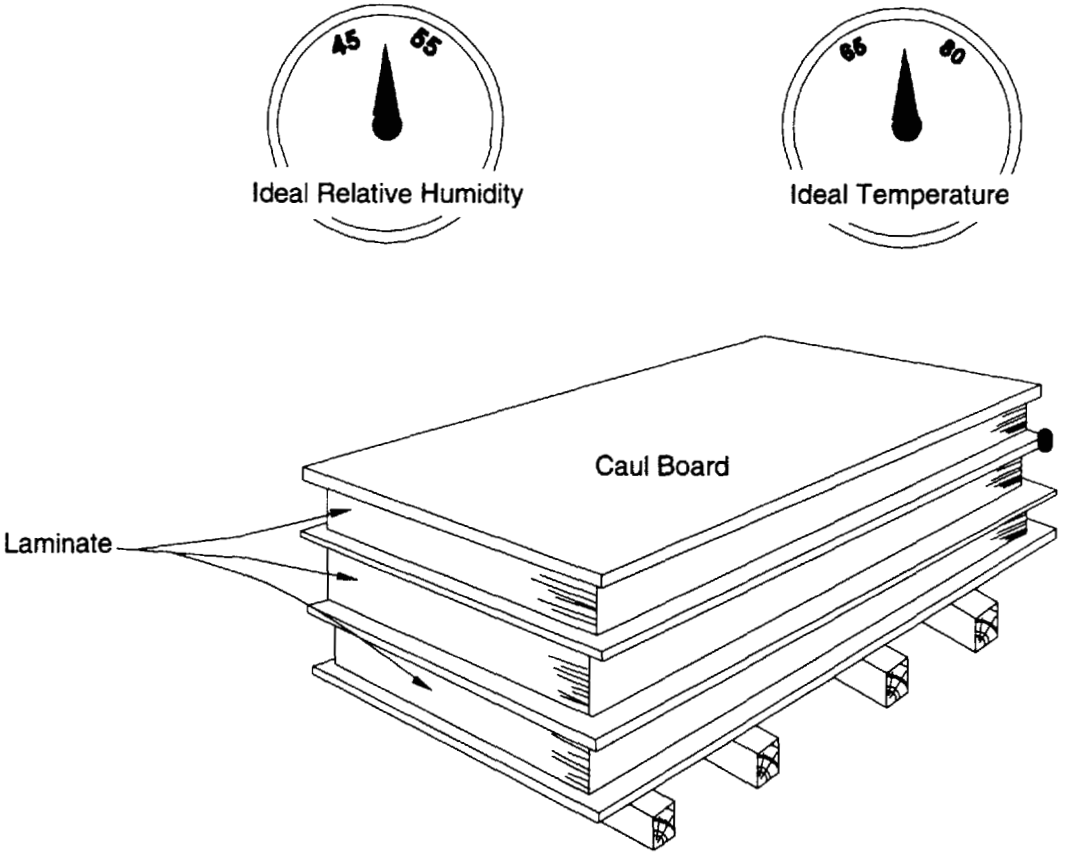

Figure 4-5
CONDITIONING OF LAMINATE

It is important that all surfaces to be bonded are clean, dry, and free of dust, oil, and other foreign matter. The work area, substrate, laminate, and adhesive should be maintained at 21°C (70°F) or warmer.

The substrate and laminate should be uniformly coated with adhesive over the entire area where bonding contact will be made, spot bonding should never be used. Drying time will vary depending on temperature and humidity. The adhesive is ready to bond when it will not transfer to smooth kraft paper in a touch test. Forced drying may be used to speed the process or overcome fluctuations in ambient temperature or humidity. Forced drying may be necessary when bonding to metal or other nonporous materials. To assemble, prealign or index the surfaces to be bonded. Indexing sticks will prevent contact of the adhesive surfaces until proper alignment is achieved. Once contact is made, ample pressure must be applied to insure a strong bond. A pinch roller is preferred, with pressure between 50 and 75 pounds per linear inch, but pressure may also be applied with a hand roller (see Figure 4-6). Refer to Section 4.3.4 for more information on bond pressures.

Copyright National Electrical Manufacturers Association
Provided by IHS under license with NEMA
No reproduction or networking permitted without license from IHS
Not for Resale

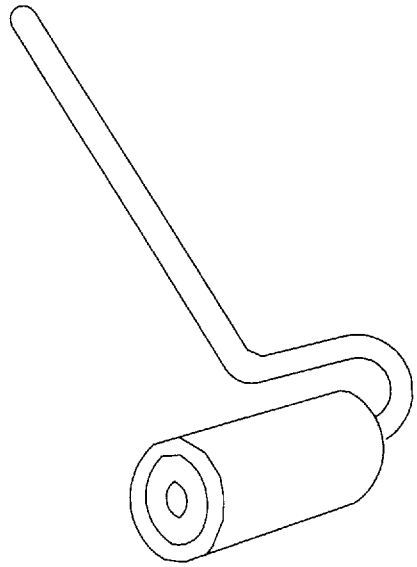

Figure 4-6
"J" ROLLER

2) Semirigid and rigid—Semirigid polyvinyl acetate (PVAc) adhesives and rigid urea, resorcinol, and epoxy adhesives require pressure in a cold (room temperature) or hot press operation at approximately 275 kPa (40 psi) for an extended period of time. Semirigid adhesives are strong, colorless, provide ease of use, odorless, nontoxic, nonflammable, clean up with water, and catalyzed Type A versions are water resistant. Rigid adhesives are also strong and water resistant, but many are toxic and hard to clean up. Resorcinols are used in Class I(A) fire rated applications.

   Proper adhesive spread and pressure should produce a small bead of adhesive flowing out all of the way around the edge of the glue line. A minimum of about 275 kPa (40 psi) is required and excessive pressure can result in a starved glue line, or telegraphing of the substrate.

d) Machining techniques—All chips, saw marks, and hairline cracks should be removed by filing, sanding, or routing as they will weaken the laminate and may lead to potential stress cracking problems at a later time. Saws and routers with carbide tipped blades are recommended to ensure chip free edges and prolonged tool life.

e) Cutouts and inside corners—The inside corners of all cutouts for electrical outlets, ranges, sinks, grills, "L" shaped countertops, etc. must have a minimum radius of 3 mm (1/8 in.) or larger to reduce the possibility of stress cracking. A radiused corner created by a 6 mm (1/4 in.) diameter router bit is normally used. All edges and inside corners should be filed smooth and free of any chips or nicks.

f) Waterproofing joints—Waterproof the backsplash seam areas on countertops which can be exposed to water or other fluids. A rabbet and groove construction with a waterproof adhesive or a receiving type molding with silicone caulking will provide satisfactory protection.

g) Warpage reduction—Panel warpage can be reduced by acclimating the material, using the same laminate on both panel sides, aligning the sanding marks on both sides and using the same adhesive and application techniques on both sides. Thick cores resist warpage better than thinner cores. Paint, varnish, vinyl film, and fiber backers will not balance high-pressure decorative laminates (HPDL). Spacing is required between panels to allow for movement.

Copyright National Electrical Manufacturers Association
Provided by IHS under license with NEMA
No reproduction or networking permitted without license from IHS
Not for Resale

4.6.2 Postforming Laminates

All forming materials have the same basic characteristics. However, each laminate supplier knows the inherent properties of their postforming-type laminate and should be consulted before starting.

Postforming laminates are made by incorporating modified thermosetting resins and by pressing techniques which allow the material to be thermally bent. The bend should be achieved quickly and uniformly when the proper temperature is reached. The reaction is final, and once bent the laminate cannot be reformed by reheating. Therefore, proper forming equipment and close attention to detail are recommended in this type of shop operation.

Some postforming fabricators maintain a list of each laminate by pattern along with the conditions of time and temperature which yield the most satisfactory results. Such data is most helpful when fabricators and laminate suppliers find it necessary to discuss technical problems.

Since countertops are secured to a framework, backer sheets are rarely used (see Figure 4-7). Installations which are exposed to higher than normal humidity conditions should have the sink cutout and all exposed wood sealed with paint, polyurethane varnish, or an appropriate backer sheet. Postformed cabinet doors (see Figure 4-8) generally require a backer sheet or decorative laminate to minimize warpage. All materials should be properly conditioned, and all rules previously listed apply to this type of installation.

Bullnose, cove, and backsplash style moldings should have straight parallel surfaces so that the postforming material can be bent uniformly. Do not attempt to draw the laminate into compound radiused shapes.

4.6.3 INSTALLATION ON THE JOB

Some major applications of laminates are in the construction of new buildings and the upgrading of old ones. As a final step before occupancy, counters which have been installed by the builder may be surfaced with laminates. Normally the material to be covered will be particleboard or plywood of good quality and should have a minimum number of seams. Contact adhesive should be used to bond the laminate to the substrate. On-the-job installation of laminates usually involves inside corners, outside corners, and cutouts. The fabricator is once again cautioned to observe the general rules listed in 4.6 for working laminates and should follow them implicitly. The importance of pressure when using contact adhesives cannot be over emphasized. A pressure of 0.90 kilograms per linear millimeter (50 pounds per linear inch) should be used. Pinch rollers are not practical for on-the-job applications. However, a long handled rubber roller with a roll 50 to 75 mm (2 to 3 inches) in diameter and 3 inches (75 mm) wide, commonly called a "J" roller, can be used satisfactorily (see Figure 4-6). Pressure should first be applied to the center of the sheet, working toward the edges to avoid trapping air which can cause surface bubbles, blisters, or cracking.

To sum up, on-the-job installations should provide for proper conditioning of the laminate, proper application of the adhesive, and close conformance with the general rules given in 4.5 and 4.6.

Copyright National Electrical Manufacturers Association
Provided by IHS under license with NEMA
No reproduction or networking permitted without license from IHS
Not for Resale

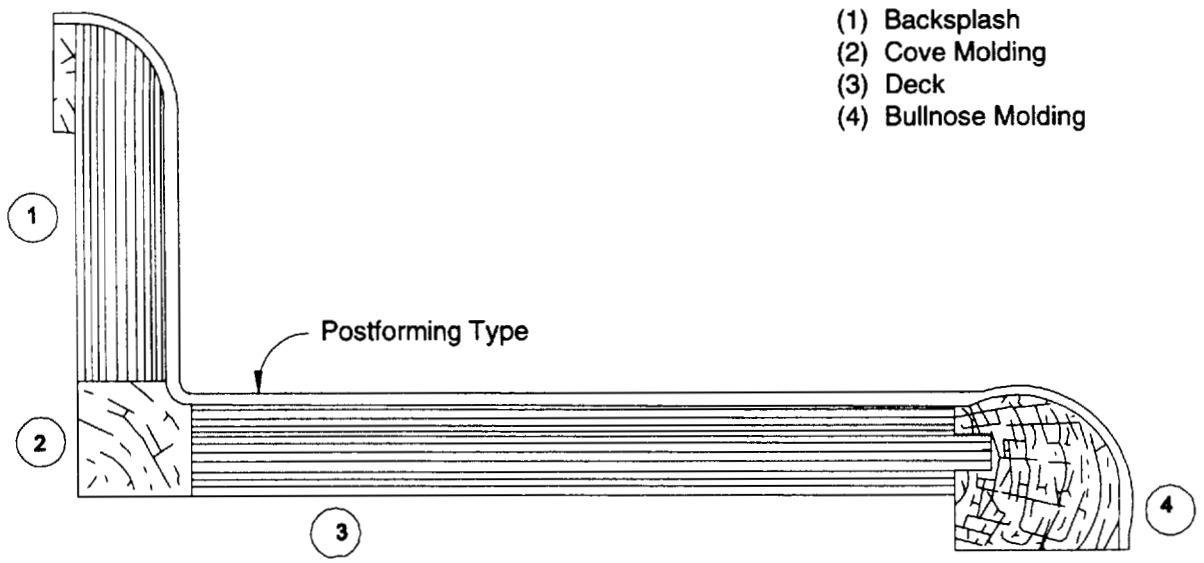

Figure 4-7
TYPICAL POSTFORMED TOP

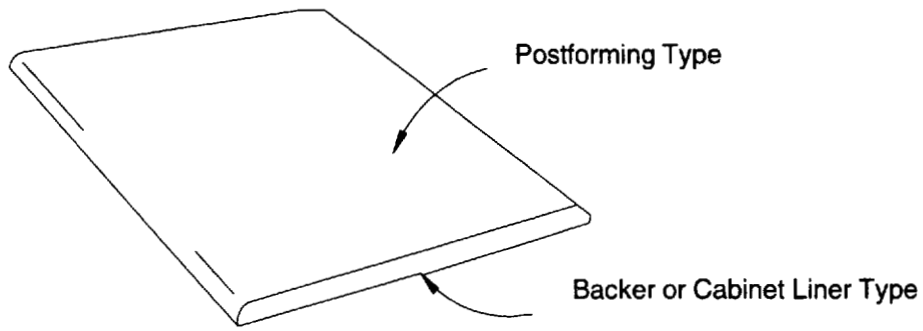

Figure 4-8
CABINET DOOR

Copyright National Electrical Manufacturers Association
Provided by IHS under license with NEMA
No reproduction or networking permitted without license from IHS
Not for Resale

4.6.4 Field Working of Bonded Assemblies

Bonded decorative laminate assemblies may be sawed, routed, filed, drilled, and otherwise worked and fitted in the field. The tools used may be hand or power operated. Since decorative laminates may dull tools more rapidly than wood, it may be necessary to sharpen tools frequently as dull tools cause chipping. Carbide-tipped tools are recommended.

The following suggestions should be followed:

a) Chamfer edges—Chamfer all exposed edges of decorative laminates by filing to prevent possible damage by chipping.

b) Splines—When using splines, install them so that the tongue of the spline stays at least 1.6 mm (1/16 inch) away from the bottom of the groove. This should permit some movement and should tend to prevent warping in the event of panel movement.

c) Seal edges—Seal exposed core edges by self-banding with laminate, with metal moldings, with waterproofing compounds, or by some other suitable means where they are exposed to water or high humidity. This is particularly applicable to joints in work tops, counters, bars, sink tops, baths, shower areas, and so forth.

d) Cutouts—Avoid making cutouts in bonded assemblies where the entire core is cut away, thus leaving the laminate unsupported. Cutouts may be made, but some portion of the core material should remain as a support. In sawing angle cuts, such as in "L" shaped counters, care should be exercised so that the laminate is not undercut. All inside corners should be radiused to prevent stress cracking.

e) Miter joints—Avoid making miter joints at 45° angles for outside corners of wall paneling, applied edges of tops, etc. A miter joint is particularly vulnerable to damage from sharp blows.

f) Joining systems—Avoid using systems to join two or more sections of horizontal work surfaces which tend to weaken the structural rigidity of the joint. An example of a good system is the use of mechanical metal fasteners which permit accurate alignment and increase the strength at the joint.

g) Inside corners—Avoid making cutouts having sharp corners and rough edges. All cutouts should be routed or filed to ensure smooth edges. A radius of 3.175 mm (1/8 inch) or larger in the corners is recommended to minimize stress cracking. The largest practical radius should be used.

4.7 TYPICAL PROBLEMS—CAUSES AND PREVENTION

Some problems which may arise after laminates have been fabricated and installed are:

a) Stress cracking—Cracking of the laminate at corners and around cutouts (see Figure 4-9) may be caused by improper conditioning, improper bonding, poor planning or any combination of these. Conditioning both the laminate and the substrate helps to prevent cracking caused by shrinkage. Rough edges, inside corners which have not been radiused, and forced fits can also cause cracking. Radiusing all edges and inside corners as large as possible 3 mm (1/8 in.) minimum will minimize stress cracking. A radiused corner created by a 6 mm (1/4 in.) diameter router bit is normally used. Seam placement of the laminate can also reduce stress cracking.

b) Open seams—Open joints or seams (see Figure 4-10) are typically caused by improper conditioning and/or bonding. Conditioning both the laminate and the substrate helps prevent open seams caused by shrinkage. Allowance should also be made for some movement of the laminate.

Copyright National Electrical Manufacturers Association
Provided by IHS under license with NEMA
No reproduction or networking permitted without license from IHS
Not for Resale

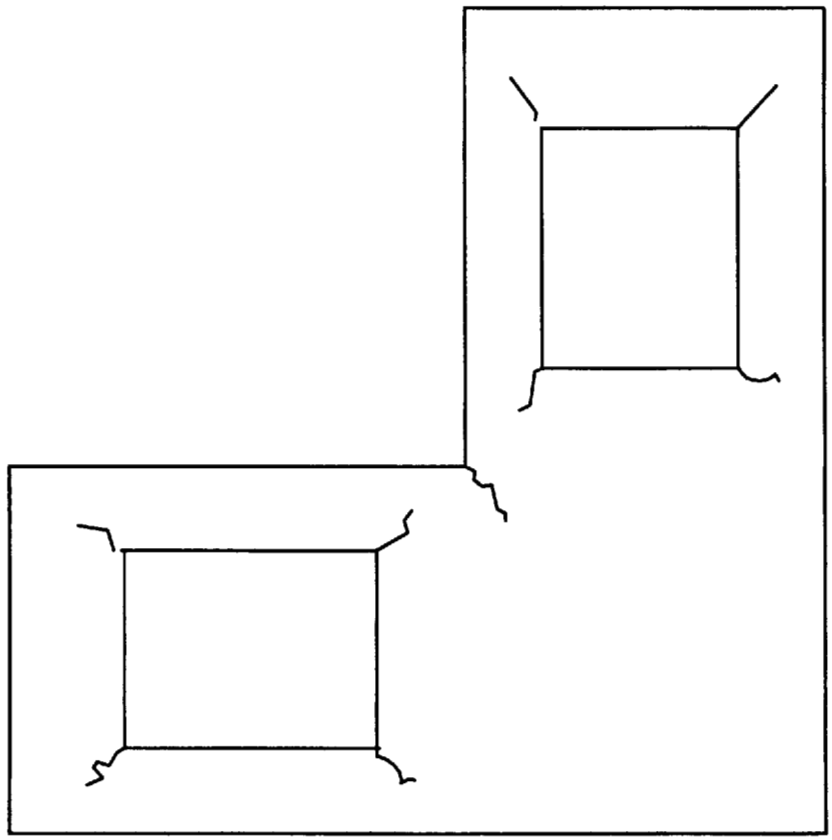

Figure 4-9
CRACKING OF LAMINATE

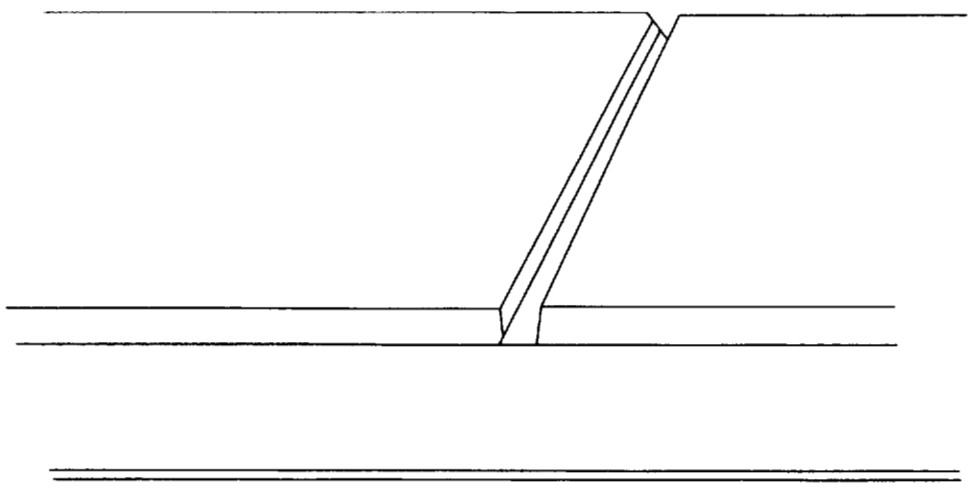

Figure 4-10
OPENING OF JOINTS OR SEAMS

Copyright National Electrical Manufacturers Association
Provided by IHS under license with NEMA
No reproduction or networking permitted without license from IHS

Not for Resale

c) Glue line delamination—Separation of the laminate from the substrate (see Figure 4-11) is generally caused by a poor adhesive bond. Factors which can influence the bond and cause poor adhesion are: improperly prepared or dirty gluing surfaces, insufficient agitation or mixing of the adhesive, insufficient amount of adhesive on either or both surfaces, temperature of the gluing area and materials below 21°C (70°F), blushing caused by excessive humidity, bonding when the adhesive coated surfaces are overdried or underdried, bonding with insufficient pressure, and field bonding of oversize sheets. Contact adhesives can often be reactivated by heat and rebonded with proper pressure provided that adequate adhesive has been applied. In cases where the edge is lifting, extra adhesive may be added and the proper pressure applied.

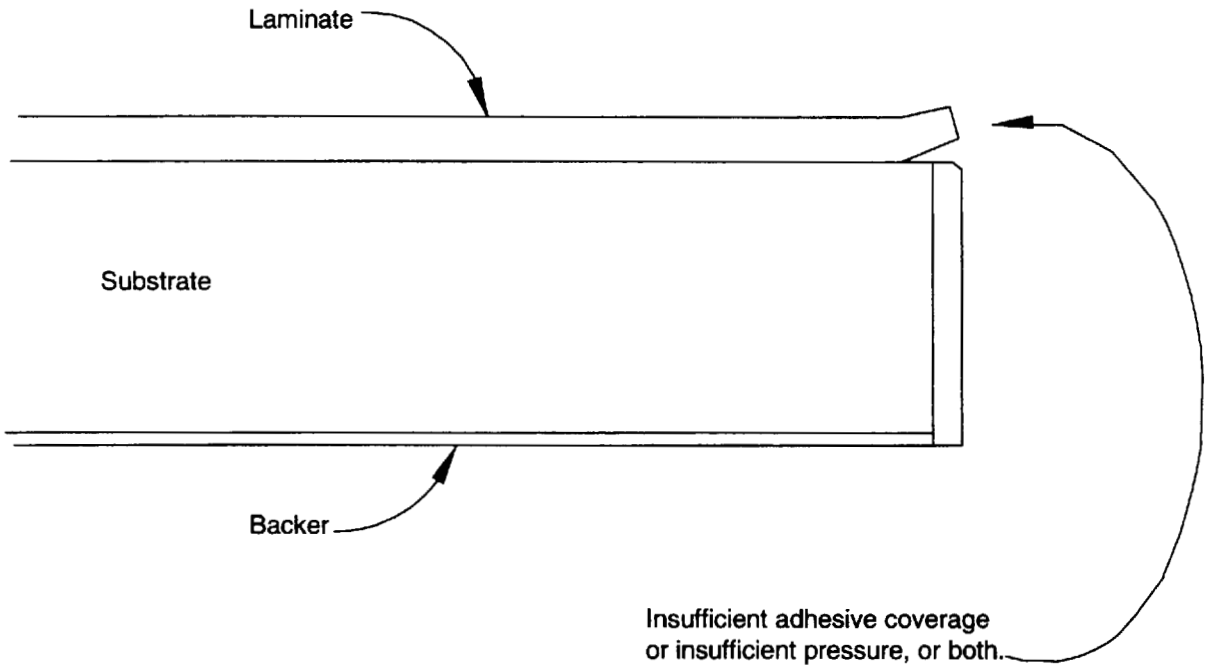

Figure 4-11
SEPARATION OF THE LAMINATE FROM THE SUBSTRATE

d) Blistering or bubbling caused by exposure to heat—The forming of a blister or bubble over a small well defined area, often accompanied by darkening of the laminate, can be caused by either a single or continual exposure to an outside source of heat. Appliances which produce heat, hot objects, light bulbs, etc. should not be placed in contact with or in close proximity to the laminate surface. Temperatures exceeding 66°C (150°F) may result in separation of the laminate from the substrate due to adhesive failure.

e) Laminate cracking—Cracking in the center of the laminate sheet can be caused by flexing of the substrate when it spans a wide distance or by spot gluing. Wide spans require sturdy framework and all glue lines should be uniform. Avoid trapping foreign objects in the glue line between the laminate and the core as cracks will occur when pressure is applied.

f) Panel warpage—Warping of the assembly (see Figure 4-12) is generally attributed to the differences in dimensional change between the face and back laminates and the core or substrate material. Different adhesives or application techniques used on the front and back face can also cause panel warpage. When one side of a panel assembly is subjected to different humidity conditions than the other side warpage can result. Warpage can also result during hot pressing

Copyright National Electrical Manufacturers Association
Provided by IHS under license with NEMA
No reproduction or networking permitted without license from IHS
Not for Resale

operations where the press platens have different temperatures. All panel components should be acclimated to the same environment prior to fabrication. Critical applications requiring a well balanced assembly should be constructed with the same laminate applied to both sides. Less critical applications may only require a cabinet liner or backer. Paint, varnish, vinyl film, and other coatings will not balance a panel having laminate on the other side. If the panel is secured to a framework, the framework should be designed and constructed to hold the assembly in a flat plane.

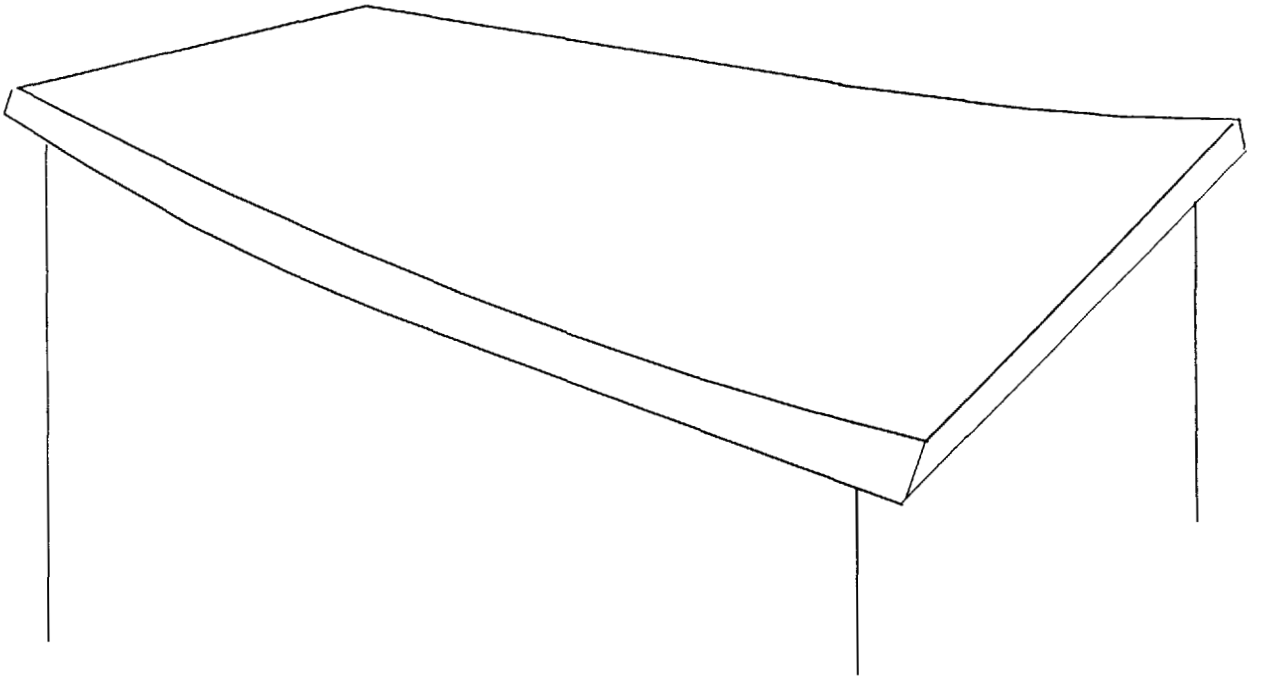

Figure 4-12
LAMINATE WARPING

Copyright National Electrical Manufacturers Association
Provided by IHS under license with NEMA
No reproduction or networking permitted without license from IHS
Not for Resale

Copyright National Electrical Manufacturers Association
Provided by IHS under license with NEMA
No reproduction or networking permitted without license from IHS

Not for Resale

Section 5
CARE AND CLEANING OF LAMINATES

The hard, durable melamine surface of high-pressure decorative laminate (HPDL) will maintain its attractive appearance longer than most other decorative surfacing materials. Unlike other fine surfacing materials, high-pressure decorative laminate (HPDL) requires minimal maintenance. The following procedures should be taken to prolong its original appearance.

a) Cleaning

1) To clean the surface, use a damp cloth or sponge and a mild soap or detergent.
2) Difficult "stains" such as coffee or tea can be removed using a mild household cleaner/detergent and a soft bristle brush, repeating as necessary.
3) If a stain persists, use a paste of baking soda and water and apply with a soft bristled brush. Light scrubbing for 10 to 20 strokes should remove most stains. Although baking soda is a low abrasive, excessive scrubbing or exerting too much force may damage the decorative surface, especially if it has a gloss finish.
4) Stubborn stains that resist any of the above cleaning methods may require the use of undiluted household bleach or nail polish remover. Apply the bleach or nail polish remover to the stain and let stand no longer than 2 minutes. Rinse thoroughly with warm water and wipe dry. This step may be repeated if the stain appears to be going away and the color of the laminate has not been affected. WARNING: Prolonged exposure of the laminate surface to bleach will cause discoloration.

b) Abrasives

1) Abrasive pads, scouring powders or cleansers may permanently dull and scratch the laminate surface making it susceptible to staining.

c) Harsh chemicals

1) Harsh chemicals such as oven cleaner, toilet cleaner, or drain cleaner will etch and discolor the decorative surface.
2) High-pressure decorative laminates (HPDL) are not designed to resist continual contact with these chemicals. If spills of these products occur, remove immediately, rinse thoroughly, and wipe dry.

d) Hot objects

1) Do not place hot frying pans or dishes directly from the oven or cooktop on the laminate surface. Even though HPDL has high heat resistance, exposure to temperatures greater than 135°C (275°F) is not recommended. As a precaution, protect the surface from heat generating appliances such as pressing irons, toasters, curling irons, and electric slow cookers by using by using a trivet or insulated pad. Prolonged exposure to temperatures above 65°C (150°F) may result in separation of the laminate from the substrate.

e) Sharp objects

1) Never use knives or other sharp objects directly on the decorative surface. A chopping block or counter saver is recommended.

Copyright National Electrical Manufacturers Association
Provided by IHS under license with NEMA
No reproduction or networking permitted without license from IHS
Not for Resale

f) Impact

1) Do not abuse the high-pressure decorative laminate (HPDL) by dropping heavy objects such as cans, dinnerware, or glasses or deliberately hammering directly on the surface. Even though high-pressure decorative laminates (HPDL) have excellent impact resistance, chipping or cracking may occur.

Copyright National Electrical Manufacturers Association
Provided by IHS under license with NEMA
No reproduction or networking permitted without license from IHS
Not for Resale

NEMA STANDARDIZATION BACKGROUND

The purpose of NEMA standards, their classification, and status are set forth in certain clauses of the NEMA *Standardization Policies and Procedures* manual and are referenced below:

Purpose of Standards

National Electrical Manufacturers Association Standards are adopted in the public interest and are designed to eliminate misunderstandings between the manufacturer and the purchaser and to assist the purchaser in selecting and obtaining the proper product for their particular needs. Existence of a National Electrical Manufacturers Association Standard does not in any respect preclude any member or nonmember from manufacturing or selling products not conforming to the standard.

Definition of a Standard

A standard of the National Electrical Manufacturers Association defines a product, process, or procedure with reference to one or more of the following: nomenclature, composition, dimensions, tolerances, safety, operating characteristics, performance, rating, testing, and the service for which they are designed.

(Standardization Policies and Procedures, p. 1)

Dimensions

Where dimensions are given for interchangeability purposes, alternate dimensions satisfying the other provisions of the Standards Publication may be capable of otherwise equivalent performance.

(Standardization Policies and Procedures, p. 6)

Categories of Standards

National Electrical Manufacturers Association Standards are of three classes, which have received the affirmative vote of at least two-thirds of the Subdivision votes cast in the affirmative or negative:

1. NEMA Standard, which relates to a product, process, or procedure commercially standardized and subject to repetitive manufacture.
2. Suggested Standard for Future Design, which may not have been regularly applied to a commercial product, but which suggests a sound engineering approach to future development.
3. Adoptive Standard, which is adopted in whole or in part from the standards of another organization, either domestic, regional, or international.

(Standardization Policies and Procedures, pp. 5)

Authorized Engineering Information

Authorized Engineering Information consists of explanatory data and other engineering information of an informative character not falling within the classification of NEMA Standard or Suggested Standard for Future Design, which standard has received the affirmative vote of at least two-thirds of the Subdivision votes cast in the affirmative or negative.

(Standardization Policies and Procedures, pp. 5)

Identification of Status

Standards in NEMA Standards Publications are identified as "NEMA Standard," "Suggested Standard for Future Design," or "Adoptive Standard." These indicate the status of the standard. A statement incorporating the auxiliary verb "shall" indicates that compliance with a requirement is mandatory for compliance with the standard. These classes of standards are identified in the foreword or throughout the text.

The material identified as "Authorized Engineering Information" is designated similarly. Statements incorporating other auxiliary verbs such as "should," "may," etc. refer to the authorized engineering information and not to procedures required for compliance with the standard.

Copyright National Electrical Manufacturers Association
Provided by IHS under license with NEMA
No reproduction or networking permitted without license from IHS
Not for Resale

DECORATIVE LAMINATE SECTION
OF THE
NATIONAL ELECTRICAL MANUFACTURERS ASSOCIATION

MEMBER COMPANIES

Formica Corporation
Cincinnati, OH

International Paper Company
Decorative Laminates Division
Odenton, MD

Pioneer Plastics Corporation
Auburn, ME

Wilsonart International, Inc.
Temple, TX

Copyright National Electrical Manufacturers Association
Provided by IHS under license with NEMA
No reproduction or networking permitted without license from IHS

Not for Resale