National Electrical Manufacturers Association
2101 L Street, N.W. Suite 300
Washington, D.C. 20037 (202) 457-8400

PROPOSED, NEW AND REVISED STANDARDS

1IS Page 15
March 9, 1988

TO ALL REPRESENTATIVES OF MEMBER COMPANIES IN THE
INDUSTRIAL AND CONTROL SYSTEMS SECTION

Subject: Revision No. **3** to NEMA Standards Publication for *Industrial Systems*, NEMA Pub. No. **ICS 3-1983.**

Dear Representative:

Revision No. **3**, consisting of printed pages dated OCTOBER 1987, is enclosed for insertion into your copy of the subject publication. Also enclosed is a new title page to indicate that your book now contains Revision Nos. **1—3** as dated on the title page.

To bring your copy of NEMA Pub. No. ICS 3-1983 up to date, please insert the attached revised pages in their proper place.

Sincerely,

Krystyna McIver
Standards Publications Editor
NEMA

Encl: Revision No. **3** to ICS 3-1983.
Copies to: All known holders of ICS 3.

Copyright National Electrical Manufacturers Association
Provided by IHS under license with NEMA
No reproduction or networking permitted without license from IHS
Not for Resale

ANSI/NEMA ICS 3-1983

ICS 3

Industrial Systems

Revision No. 1—March 1985
Revision No. 2—July 1987
Revision No. 3—October 1987

ANSI Approval Including Revision 1—October 8, 1986

Published by

National Electrical Manufacturers Association
2101 L Street, NW
Washington, DC 20037
(202) 457-8400

© 1988 by National Electrical Manufacturers Association

Copyright National Electrical Manufacturers Association
Provided by IHS under license with NEMA
No reproduction or networking permitted without license from IHS
Not for Resale

OCTOBER 1987

CONDENSED TABLE OF CONTENTS*▲

Given below is a condensed table of contents for NEMA Standards Publication No. ICS 3. Publication No. ICS 9 is a detailed table of contents for all NEMA Standards Publications for Industrial Controls and Systems and is supplied as a supplement to be used with NEMA Standards Publication No. ICS 3.

	Title	Page
Part ICS 3-100	GENERAL STANDARDS FOR INDUSTRIAL SYSTEMS	1
Part ICS 3-104	CLASSIFICATION OF SYSTEMS AND SUBSYSTEMS	1
Part ICS 3-106A	PERFORMANCE OF FEEDBACK CONTROL SYSTEMS	1
Part ICS 3-106B	PERFORMANCE OF SPEED, VOLTAGE AND CURRENT CONTROL SYSTEMS	1
Part ICS 3-106C	PERFORMANCE OF LOOP POSITION AND TENSION CONTROL SYSTEMS	1
Part ICS 3-106D	PERFORMANCE OF WIND AND UNWIND DRIVE SYSTEMS	1
Part ICS 3-202	DIGITAL POSITION ENCODERS	1
Part ICS 3-301	GENERAL PURPOSE SELF-COMMUTATED ADJUSTABLE FREQUENCY CONTROLLERS FOR AC THREE-PHASE MOTORS ONE HORSEPOWER AND UP WITH INPUT VOLTAGE UP TO 600 VOLTS, USING SEMICONDUCTOR POWER CONVERSION	1
Part ICS 3-302	GENERAL-PURPOSE ADJUSTABLE-VOLTAGE PACKAGED-DRIVE SYSTEMS (WHERE DC ARMATURE POWER IS OBTAINED FROM AC LINES USING CONTROLLED SEMICONDUCTOR RECTIFIERS)	1
Part ICS 3-303	GENERAL-PURPOSE ADJUSTABLE-FREQUENCY DRIVE SYSTEMS USING SEMICONDUCTOR POWER CONVERSION	1
Part ICS 3-304	PROGRAMMABLE CONTROLLERS	1
Part ICS 3-441	DC MAGNETIC CONTROLLERS FOR METAL MILLS	1
Part ICS 3-442	GENERAL STANDARDS FOR CRANE CONTROLLERS	1
Part ICS 3-443	DC AND AC CONTROLLERS FOR CRANES	1
Part ICS 3-445	CRANE AND HOIST POWER CIRCUIT LIMIT SWITCHES	1
Appendix A	REFERENCED STANDARDS	A-1
Appendix B	APPLICATION GUIDE FOR LINE REACTORS/INPUT TRANSFORMERS	B-1

* See the enclosed Publication No. ICS 9 for a detailed table of contents for all NEMA Standards Publications for Industrial Controls and Systems.
▲ Editorially revised.

© 1988 by National Electrical Manufacturers Association

Copyright National Electrical Manufacturers Association
Provided by IHS under license with NEMA
No reproduction or networking permitted without license from IHS
Not for Resale

OCTOBER 1987
PUB. NO. ICS 3
PART ICS 3-301, PAGE 1

Part ICS 3-301

GENERAL PURPOSE SELF-COMMUTATED ADJUSTABLE FREQUENCY CONTROLLERS FOR AC THREE-PHASE MOTORS, ONE HORSEPOWER AND UP WITH INPUT VOLTAGE UP TO 600 VOLTS, USING SEMICONDUCTOR POWER CONVERSION

The standards in this part apply to general purpose adjustable frequency controllers with a base output frequency up to 500 Hz. When the output terminals of these controllers are connected to the line terminals of alternating current synchronous or induction motors, an adjustable output frequency can be applied to the motor, by controlled semiconductors in Form FC (see ICS-104.08). The definitions and standards of Part ICS 3-100 and NEMA Standards Publication No. ICS 1 apply to this part unless otherwise specified. Part ICS 3-303 does not apply to the standards in this part.

GENERAL INFORMATION AND FEATURES

ICS 3-301.05 ADJUSTABLE FREQUENCY CONTROLLERS FOR AC MOTORS

For the purpose of ICS 3-301, an adjustable frequency controller is one which includes the power conversion and control equipment, but not the ac motor(s) to which its output is connected.

NEMA Standard 10-21-1987.

ICS 3-301.06 SERVICE CONDITIONS

Equipment conforming with these standards shall be capable of operating continuously at its rating under the usual service conditions specified in Part ICS 1-108 of NEMA Standards Publication No. ICS 1. Rated performance may not be achieved if the supply voltage falls more than 5 percent below the rated nameplate value. (This sentence is approved as Authorized Engineering Information.)

NEMA Standard 10-21-1987.

For continuous operation of the controllers (especially those capable of regeneration, which could result in a fault condition) at supply voltages less than 5 percent below the rated nameplate value, the supplier should be consulted.

Authorized Engineering Information 10-21-1987.

Unusual service conditions are given in Part ICS 1-108 of NEMA Standards Publication No. ICS 1.

NEMA Standard 10-21-1987.

ICS 3-301.07 MODES OF OPERATION

Adjustable frequency controllers are designed to have a constant volts/hertz range and may also have a constant voltage with an adjustable frequency range. Depending on motor characteristics, these two ranges can correspond to constant torque (constant volts/hertz) and constant power (constant voltage with an adjustable frequency). Power and corresponding torque capabilities of the motor in the region above base frequency should be reviewed with the motor manufacturer. Direct/indirect vector control may also be incorporated.

Authorized Engineering Information 10-21-1987.

ICS 3-301.08 FEATURES

Certain features may be required for certain motor and process applications and if so, should be specified by the user.

Authorized Engineering Information 10-21-1987.

Copyright National Electrical Manufacturers Association
Provided by IHS under license with NEMA
No reproduction or networking permitted without license from IHS
Not for Resale

RATINGS

ICS 3-301.20 INPUT POWER VOLTAGE PREFERRED RATINGS

Input power voltage preferred ratings are alternating current, 60 Hertz-200, 230, 460 and 575 volts; line-to-line; three-phase; and 200 and 230 volt single-phase.

NEMA Standard 10-21-1987.

ICS 3-301.21 INPUT AMPERE RATINGS

Maximum continuous input ampere ratings shall be decided by the manufacturer of the controller.

Maximum continuous input amperes are dependent on type of inverter stage (PWM, AVI, CSI) and, in some cases, on controller input configuration and system impedance.

NEMA Standard 10-21-1987.

ICS 3-301.22 CONTROLLER OUTPUT RATINGS

Continuous output ratings shall be in voltage, amperes, and frequency range. A horsepower or kilowatt or KVA rating shall be permitted as a general guide to assist the user in motor selection. However, final selection of the motor-controller combination must not exceed the controller rating (amperes, volts, and frequency). Many factors preclude the use of actual horsepower or kilowatt ratings, unless there is prior agreement with a particular user's requirements. These factors include:

(a) Variations in motor nameplate amperes versus horsepower or kilowatt ratings;
(b) Harmonic content of the controller output amperes and voltages;
(c) Variations of motor nameplate amperes with motor base speed (motor poles);
(d) Variation of motor torque/ampere, particularly in the extended (high) frequency range;
(e) Possible mechanical limits that restrict the motor from operation above its designed base speed;
(f) Cases where the motor electrical parameters form an integral part of the commutation circuitry of the controller.

In all cases, motor nameplate amperes shall be considered in selecting the controller rating.

NEMA Standard 10-21-1987.

ICS 3-301.23 SERVICE-LIMIT OUTPUT CURRENT

The service-limit output current ratings represent the maximum rms current, in amperes, which the controller is expected to carry for protracted periods in normal service. At service-limit current ratings, temperature rises shall be permitted to exceed those obtained by testing the controller at its continuous current rating. The current rating of overcurrent relays or the trip current of the motor protective devices (if used) shall not exceed the service-limit current rating of the controller.

NEMA Standard 10-21-1987.

ICS 3-301.40 STEADY-STATE PERFORMANCE

Steady-state performance for parameters such as output voltage and output frequency shall be specified in accordance with the methods given in Parts ICS 3-106A and 3-106B. These methods also apply when a tachometer feedback feature is included.

NEMA Standard 10-21-1987.

ICS 3-301.41 PERMISSIBLE OPERATING FREQUENCY

The operating frequency range over which the controller is capable of maintaining its steady-state output current shall be specified. Information as shown in the following sketch is illustrative of permissible operating frequency range:

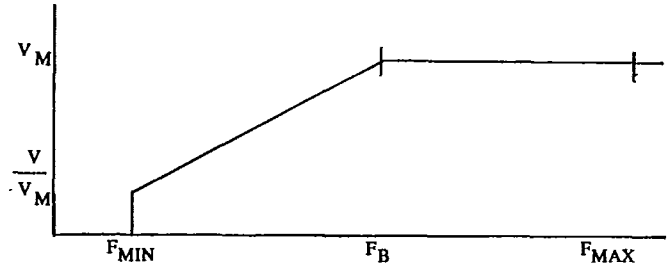

V_M = Maximum output voltage F_B = Base frequency
F_{MIN} = Minimum frequency F_{MAX} = Maximum frequency

NEMA Standard 10-21-1987.

NOTE: In some equipment current may vary with frequency and may not have a constant current mode of operation. The horsepower (or kw) may be specified to vary with frequency (see Part 3-301.42).

Authorized Engineering Information 10-21-1987.

.01 Definition of Base Frequency

Base frequency is the lowest frequency at which the controller can develop rated output voltage.

NEMA Standard 10-21-1987.

Copyright National Electrical Manufacturers Association
Provided by IHS under license with NEMA
No reproduction or networking permitted without license from IHS

Not for Resale

ICS 3-301.42 OVERLOAD CAPACITY

Controllers shall be rated for not less than one or the other of two basic overload capacities:

(a) Following continuous operation at rated amperes, controllers shall be capable of carrying 150 percent of rated amperes, followed by a period of light load operation of such duration that the rms amperes do not exceed rated continuous current without exceeding the temperature rise limitations of Part ICS 1-109 of NEMA Standards Publication No. ICS 1.

(b) Following continuous operation at rated amperes, controllers shall be capable of carrying 110 percent of rated amperes one minute, followed by a period of light load operation of such duration that the rms amperes do not exceed rated continuous current without exceeding the temperature rise limitations of Part ICS 1-109 of NEMA Standards Publication No. ICS 1.

NEMA Standard 10-21-1987.

This controller rating is for what is known as "variable torque" performance, such as a centrifugal type load, wherein load horsepower or KW varies as cube of the speed and where starting torques of the selected motor are less than the full load torque at rated process speed, usually on the order of 40 percent of motor full load torque.

Authorized Engineering Information 10-21-1987.

ICS 3-301.43 STARTING CHARACTERISTICS

To assist the user in selecting a controller such that a motor with optimum starting torque can be connected to the controller, the values of momentary overcurrent and voltage boost capabilities, if any, at low or minimum starting frequency, shall be made available to the user.

NEMA Standard 10-21-1987.

ICS 3-301.60 INSTRUMENTATION FOR PERFORMANCE TESTING

The input and output amperes and voltages of the controllers will have varying amounts of harmonics, depending on frequency setting, type of modulation in the inverter stage and input/output impedances. The manufacturer shall, upon request, advise what type of instruments (ammeters, voltmeters) are to be used in measuring these quantities and under what values of input/output impedance.

NEMA Standard 10-21-1987.

ICS 3-301.61 DYNAMIC BRAKING SLOW DOWN OPTION

When dynamic braking slow down is provided, the resistors used for this purpose shall be capable of absorbing six times the stored energy of the motor at base speed, with the resistors initially at ambient temperature. For duty cycles involving repeated operation or high inertia, it may be necessary to specify higher energy storage capability. (This sentence is approved as Authorized Engineering Information.)

To assist the user in applying a controller with dynamic braking stop option, the energy absorbing rating of the dynamic braking stop circuit shall be made available to the user.

NEMA Standard 10-21-1987.

ICS 3-301.62 DYNAMIC BRAKING STOP OPTION

When dynamic braking stop is provided, controller shall be capable of braking a load at an initial current of 150 percent of rated current at base speed and the resistor shall be capable of absorbing six times the stored energy of the motor at base speed with the dynamic braking resistor initially at ambient temperature.

NEMA Standard 10-21-1987.

Dynamic braking is considered to apply only to the use of a resistor across or in the direct-current link of an adjustable-frequency drive ac motor controller. This implies maintained control of the controller during the stopping period. It is not necessarily the only or best method for quick stopping.

Authorized Engineering Information 10-21-1987.

The energy absorption capability of the resistor is not necessarily greater than that for a direct-current drive (see ICS 3-302.62) because the inertia of an alternating-current motor is typically less than that of a comparable direct-current motor.

Authorized Engineering Information 10-21-1987.

To assist the user in applying a controller with dynamic braking slowdown option, the energy absorbing rating of the dynamic braking slowdown circuit shall be made available to the user.

NEMA Standard 10-21-1987.

Copyright National Electrical Manufacturers Association
Provided by IHS under license with NEMA
No reproduction or networking permitted without license from IHS
Not for Resale

ICS 3-301.63 CONTROLLER DATA

The following information shall be supplied by the manufacturer:

.01 Controller Nameplate

(a) Manufacturer's name
(b) Equipment identification
(c) Input rating
  (1) Voltage
  (2) Maximum continuous amperes
  (3) Frequency
  (4) Number of phases
  (5) Maximum allowable ac system symmetrical short circuit current (refer to application guidelines in Appendix B
(d) Output Rating
  (1) Maximum output voltage
  (2) Rated continuous amperes
  (3) Momentary amperes, one minute
  (4) Frequency range
  (5) Number of phases
  (6) Nominal hp or KW or KVA (optional)

.02 OPERATING AND MAINTENANCE DATA

To be supplied in accordance with ICS 3.1-2.02.

NEMA Standard 10-21-1987.

ICS 3-301.80 SAFETY STANDARDS

NEMA Standards Publication No. ICS 3.1-1983 *Safety Standards for Construction and Guide for Selection, Installation and Operation of Adjustable Speed Drive Systems* shall apply to this standard with particular references as follows:

.01 Safety and Warning Labels

Parts ICS 3.1–2.03, ICS 3.1–2.04, ICS 3.1–2.08, ICS 3.1–2.11.01.

(Part ICS 1-112.67, Warning Label Marking, shall apply to this standard also.)

.02 Supply Circuit Disconnect Devices

Part ICS 3.1–2.03.

.03 Safety in Application

ICS 3.1–4.

NEMA Standard 10-21-1987.

Copyright National Electrical Manufacturers Association
Provided by IHS under license with NEMA
No reproduction or networking permitted without license from IHS
Not for Resale

Appendix B

APPLICATION GUIDE FOR LINE REACTORS/INPUT TRANSFORMERS

This appendix discusses conditions which would warrant the addition of line reactors or input transformers when selecting an adjustable frequency ac motor speed controller.

Condition 1—Voltage Matching

When line voltage is other than the rated controller input voltage, a step-up or step-down transformer, or auto transformer on the controller input may be used. The voltage transformation may be accomplished by using feeder transformers supplying mixed loads. In the case of larger controllers, separate dedicated transformers may be supplied for single controllers or groups of controllers.

Condition 2—Codes

Local or plant codes may specify electrical isolation, which could include the use of transformers.

Condition 3—Provide Continuity of Service for Installations Prone to Nuisance Grounding

For certain applications, engineering practice may dictate the use of ungrounded or impedance grounded branch circuits on controllers and motors. Such applications are usually found in continuous process industries such as pulp and paper, food processing, chemical, cement, mining, or metals. Nuisance grounding of branch circuit conductors is common in these industries due to the effects of moisture or other environmental conditions on the branch circuit and motor insulation systems. To maintain continuity of service in a nuisance ground environment, an isolation transformer is used to galvanically isolate the controller branch circuit from the overall distribution system. In this manner, continued controller branch circuit operation is possible with a single nuisance ground. To provide continued protection, the user should clear the nuisance ground at the earliest opportunity.

The use of a transformer to provide continuity of service under nuisance ground conditions should not be confused with controller ground fault protection. Controller ground fault protection will protect the controller under ground fault conditions specified by the manufacturer but may not provide the continuity of service desired.

Condition 4—Line Voltage Unbalance

Unbalanced voltage greater than 2 percent between phases of the incoming line may cause larger than rated line currents to be drawn from the ac line. An isolation transformer or line reactor equipped with taps may be used to compensate the voltage unbalance at all rated load conditions.

Condition 5—Reduction of Controller Input Harmonic Currents

The input currents to adjustable frequency controllers are generally non-sinusoidal. These non-sinusoidal currents are composed of a sinusoidal component of current at line frequency (known as the fundamental current) and additional sinsuoidal components of current (known as harmonic currents) at frequencies other than the line frequency.

Since the harmonic currents do not aid in transmission of power and contribute to the volt-ampere loading of the distribution system, minimizing the magnitudes of these harmonic line currents is desirable. IEEE Standard 519-1981, *Guide for Harmonic Control and Reactive Compensation of Static Power Converters* discusses in detail the effects of harmonic currents and establishes acceptable limits as to the effects of harmonic currents. The user should specify the degree of harmonic control required.

On certain types of controllers, the harmonic content of the input line current may be varied by inserting impedance between the controller input and the distribution system. Transformers and line reactors are convenient devices for modifying the feeder impedance characteristics. Since the magnitude of these

Copyright National Electrical Manufacturers Association
Provided by IHS under license with NEMA
No reproduction or networking permitted without license from IHS
Not for Resale

input harmonic currents is a function of the power conversion process within the controller, it is difficult to suggest any general guidelines for the adjustment of feeder impedance. The controller manufacturer should be consulted as to the feasibility and method of reducing the input current harmonic content to the desired level.

Condition 6—Minimize Line Voltage Notching

Adjustable frequency drive controllers utilize a solid-state input power converter connected to the ac input lines. These converters may generate a voltage transient on the ac input lines known as a line notch. Line notching generally occurs when the input line converter is operating in the continuous current conducting mode. The line notch transient is described in IEEE Standard 597-1983, *Practices and Requirements for General Purpose Thyristor DC Drives*. Most methods of notch area reduction involve the use of transformers or reactors to insert impedance between the distribution system and the controller input. Acceptable limits for notch area and methods of reducing the notch area are given in IEEE 519-1981. Since the severity of the line notch transients also depends on the configuration of the controller input power converter, the user should consider this fact in applying controllers. The controller manufacturer can be consulted to determine the type of input power converter utilized and the recommended methods to reduce line notching transients.

Condition 7—Reduce Available Feeder Short-Circuit Capacity of Drive Controller

When the distribution feeder short circuit capacity at the controller input is greater than the controller input short-circuit withstand ability level (as published on the controller nameplate), input transformers or reactors can be utilized to insert impedance between the feeder and the controller input to decrease the short-circuit capacity at the controller input terminals.

Condition 8—Maximum/Minimum Impedance for Proper Operation

AC Source Impedance

The ac source impedance is that defined at the input terminals of the controller equipment and is determined by the characteristics of the supply conductors, supply transformers, and other connected loads such as motors and capacitors.

Minimum Source Impedance

The minimum ac source impedance to be used for proper operation of the controller equipment should be specified by the supplier. Additional impedance can be provided by series reactors and/or transformers if needed.

NOTE: To insure adequate equipment bracing and protective coordination, the maximum allowable ac system symmetrical short circuit current at the input terminals of the controller equipment should be specified by the supplier.

Maximum Source Impedance

The maximum ac source impedance to be used for proper operation of the controller equipment should be specified by the supplier.

Authorized Engineering Information 10-21-1987.

Copyright National Electrical Manufacturers Association
Provided by IHS under license with NEMA
No reproduction or networking permitted without license from IHS
Not for Resale

National Electrical Manufacturers Association
2101 L Street, N.W. Suite 300
Washington, D.C. 20037 (202) 457-8400

PROPOSED, NEW AND REVISED STANDARDS

November 18, 1987

TO ALL REPRESENTATIVES OF MEMBER COMPANIES
OF THE INDUSTRIAL CONTROL AND SYSTEMS SECTION

Subject: Second set of revised pages to NEMA Standards Publication No. **ICS 3-1983,** *Industrial Systems*

Dear Representative:

In May and August 1986 and January and July 1987 the Codes and Standards Committee approved Revision No. **2** to ICS 3-1983. Enclosed is your copy of this revision dated appropriately.

Please note that proposed part ICS 3-446 was approved in May 1986 and is enclosed as a new part.

A revised title page indicating that the standard now includes Revision 2 is also attached. Please insert these revised pages carefully, as extra copies are not available.

Sincerely yours,

Krystyna Bagnato

Krystyna Bagnato
Standards Publications Editor

cc: Technical Committee
All known holders of ICS 3-1983

Copyright National Electrical Manufacturers Association
Provided by IHS under license with NEMA
No reproduction or networking permitted without license from IHS
Not for Resale

ICS 3-83 6470247 0001776 1 A-90-55

ICS 3

Industrial Systems

Revision No. 1—March 1985
Revision No. 2—July 1987

ANSI Approval Including Revision 1—October 8, 1986

Published by

National Electrical Manufacturers Association
2101 L Street, NW
Washington, DC 20037
(202) 457-8400

© 1987 by National Electrical Manufacturers Association

Copyright National Electrical Manufacturers Association
Provided by IHS under license with NEMA
No reproduction or networking permitted without license from IHS
Not for Resale

FOREWORD

This Standards Publication, together with the others listed below, supersedes and revises Standards Publication of the Industrial Control and Systems Section. Also included in these publications is the information separately printed as NEMA Standards Publication No. ICS 2.2-1983, *Maintenance of Motor Controllers After a Fault Condition.* Standards Publication No. ICS 3.1-1983, *Safety Standards for Construction and Guide for Selection, Installation and Operation of Adjustable-Speed Drive Systems,* is a supplement to Standards Publication No. ICS 3-1983 and is not included.

Since Standards Publication No. ICS 1 applies as a general standard and Standards Publication No. ICS 6 applies to enclosures used for controls and systems apparatus, these two standards should be used in conjunction with each of the product standards.

NEMA Standards Publication No.	Supersedes
ICS 1-1983, *General Standards for Industrial Control and Systems*	ICS 1-1978, formerly Part 1 (white pages) of NEMA Standards Publication No. ICS-1970, *Industrial Control and Systems*
ICS 2-1983, *Industrial Control Devices, Controllers and Assemblies*	ICS 2-1978, formerly Part 2 (green pages) of NEMA Standards Publication No. ICS-1970, *Industrial Control and Systems*
ICS 3-1983, *Industrial Systems*	ICS 3-1978, formerly Part 3 (yellow pages) of NEMA Standards Publication No. ICS-1970, *Industrial Control and Systems*
ICS 4-1983, *Terminal Blocks for Industrial Control Equipment and Systems*	ICS 4-1977, formerly NEMA Standards Publication No. IS 4-1968, *Terminal Blocks for Industrial Control Equipment and Systems*
ICS 5-1983, *Resistance Welding Control*	ICS 5-1978, formerly NEMA Standards Publication No. IS 5-1974, *Resistance Welding Control*
ICS 6-1983, *Enclosures for Industrial Controls and Systems*	NEMA Standards Publication No. IS 1.1-1977, *Enclosures for Industrial Controls and Systems;* and Part ICS 1-110 of NEMA Standards Pubication No. ICS-1970, *Industrial Controls and Systems*

In November of 1983, unrevised portions of all NEMA Standards Publications for Industrial Control and Systems (the ICS Series) were reaffirmed.

This Standards Publication provides practical information concerning ratings, construction, test, performance and manufacture of industrial control equipment. These standards are used by the electrical industry to provide guidelines for the manufacture and proper application of reliable products and equipment and to promote the benefits of repetitive manufacturing and widespread product availability.

Copyright National Electrical Manufacturers Association
Provided by IHS under license with NEMA
No reproduction or networking permitted without license from IHS
Not for Resale

Part ICS 3-442

GENERAL STANDARDS FOR CRANE CONTROLLERS

The standards in this part apply to controllers for crane service as applied to direct-current and wound-rotor alternating-current motors, 600 volts or less. The provisions of this part also apply to Part ICS 3-443. The types of cranes to which these standards are applicable are defined in the following American National Standards:

B30.2-1967 Safety Code for Overhead and Gantry Cranes
B30.3-1975 Hammerhead Tower Cranes
B30.4-1973 Safety Standard for Portal, Tower and Pillar Cranes

The definitions and standards of Part ICS 3-100 and NEMA Standards Publication No. ICS 1 apply to this part unless otherwise specified.

GENERAL INFORMATION AND FEATURES

ICS 3-442.05 CRANE CONTROLLER CLASSIFICATIONS

.01 General

The crane controller class (I or II) should be specified by the controller purchaser.

.02 Class I

Class I crane controllers are intended for use with Crane Manufacturers Association of America (CMAA) crane service classes C, D, E, and F (except floor operated Class C cranes) less than 31 horsepower.

.03 Class II

Class II crane controllers are intended for use with CMAA crane service classes A and B, plus floor operated Class C cranes up to 30 horsepower.

.04 Definitions

For definitions of CMAA crane service classes, see the CMAA Publication No. 70, *Specifications for Electric Overhead Traveling Cranes.*

.05 Crane Service

Crane service is typically intermittent at a 50% or less duty cycle, with an on time not to exceed 10 minutes.

Authorized Engineering Information 7-22-1987.

ICS 3-442.06 GENERAL PROVISIONS FOR DC AND AC CONTROLLERS

(a) Each controller shall provide means for starting, stopping, speed control and reversing.

(b) Electric-braking means shall be provided for hoists which are not equipped with mechanical load brakes.

(c) Undervoltage and overload protection shall be provided for each motor. The devices necessary to provide this protection shall be integral with the panels for the individual motions in accordance with the appropriate tables in Part ICS 3-443, unless grouped protection is specified. When grouped protection is specified, common undervoltage protection and individual motor running overload protection shall be grouped in accordance with the appropriate tables in Part ICS 3-443.

(d) Controllers employing semiconductor power devices shall be rated on a continuous duty with overload considerations. Extrapolations for intermittent duty are subject to analysis by the manufacturer with regard to ambient, enclosure, duty cycle, and ventilation.

NEMA Standard 1-21-1987.

ICS 3-442.07 DISCONNECTING MEANS FOR CRANES

Unless the installation is covered by the exception stated in Section 610-32 of the *National Electrical Code*, a motor circuit switch or circuit breaker with provision for locking in the open position shall be provided in the leads from the runway contact conductors on all cranes. Where this disconnecting means is not readily accessible from the crane operating station, means shall be provided at the crane operating station to open the common power circuit to the crane motors.

NEMA Standard 11-6-1975.

ICS 3-442.08 RATING OF DISCONNECTING MEANS FOR CRANES

The disconnecting means for cranes shall have a continuous current rating equal to or greater than the larger of:

(a) Fifty percent of the combined intermittent-duty ratings of all the motors* on the crane, plus the rated current of auxiliary loads* (other than crane motions) on the load side of the disconnecting means, or

(b) Seventy-five percent of the sum of intermittent-duty ratings of all motors* required for the crane motion

*For systems with power conversion equipment on the crane, the current shall be the equivalent input current.

Copyright National Electrical Manufacturers Association
Provided by IHS under license with NEMA
No reproduction or networking permitted without license from IHS
Not for Resale

having the largest horsepower plus the rated current of all auxiliary loads* (other than crane motions) on the load side of the disconnecting means.

Electrically operated disconnecting means shall be capable of operating in conjunction with a pilot device having contacts with a maximum current rating of Contact Rating Designation "B" for AC control and "P" for DC control, in accordance with ICS 2-125.20 and .21 of NEMA Standards Publication ICS No. 2.

NEMA Standard 7-14-1982.

ICS 3-442.09 BRANCH CIRCUIT PROTECTION

The branch circuit protection required by Article 610 of the *National Electrical Code* may be achieved by devices on the controllers for each motion, when specified, or by separately mounted devices.

Authorized Engineering Information 11-6-1975.

ICS 3-442.10 RESISTORS

All power circuit resistors shall be provided with terminal facilities and shall be mounted in substantial end frames.

Power circuit resistors shall be selected from Table 2-213-2 or Table 2-213-3 in Part ICS 2-213 of NEMA Standards Publication No. ICS 2. CMAA Class D, E, or F cranes shall have a rating not less than Class 160, unless otherwise specified.

When the application requires continuous duty, speed regulating resistors shall be selected in accordance with NOTE (c) of Table 2-213-4 of NEMA Standards Publication No. ICS 2.

NEMA Standard 11-6-1975.

ICS 3-442.11 ELECTRICALLY OPERATED BRAKES

Electrically operated brakes should meet the applicable requirements of American National Standards B30.2, B30.3, or B30.4.

Electrically operated brakes should meet the requirements of Part ICS 2-220.

Authorized Engineering Information 1-21-1987.

ICS 3-442.12 TERMINATIONS FOR POWER CABLES

Terminal facilities shall be provided in the controller for power cables and shall have the same rating as the contactors.

Incoming line leads shall terminate directly at the line side of the utilizing devices.

NEMA Standard 11-6-1975.

ICS 3-442.13 STEPS OF HAND CONTROL FOR OPERATOR

If the speed range is covered in steps, the master switch or control station shall provide for the following steps of control:

(a) For all crane motions, a minimum of three hand-controlled speed points in each direction, except that:
  (1) For Class I cab-operated hoist controllers with three or more accelerating contactors, a minimum of five hand-controlled speed points in each direction shall be provided.
  (2) For alternating current Class II controllers rated less than 8 horsepower a minimum of two hand-controlled speed points in each direction is required.
  (3) For floor-operated bridge and trolley motions a minimum of one hand controlled point in each direction is required.

(b) When specified, a drift point (no power, no brake) shall be included as a hand-controlled speed point in addition to the above minimum requirements for bridge and trolley motions.

NEMA Standard 11-5-1975.

ICS 3-442.14 DIRECTION OF OPERATION OF MASTER SWITCH LEVERS

The direction of operation of master switch levers shall be as shown in Figure 3-442-1.

NEMA Standard 11-6-1975.

ICS 3-442.15 SUSPENDED PENDENT OR WIRED PORTABLE MASTER CONTROL STATIONS

.01 Devices Required

Suspended stations shall include the following devices in addition to those required for each crane motion:

(a) A momentary contact pushbutton or switch or a maintained contact pushbutton arranged to open one side of the control circuit which feeds the motor control panels and the protective devices. This pushbutton shall be marked in red and labeled "Power Off."

(b) A momentary contact pushbutton arranged to reset the control circuit undervoltage protective device and labeled "Power On."

(c) Terminal for grounding exposed metal parts.

The hoist, bridge and trolley switches shall return to the OFF position when the operating handle, arm, or button is released. This is a spring-return type of switch, commonly known as a "deadman" control.

.02 Direction of Controlled Motion

The direction of the motion which is controlled shall be indicated on the master switch station in accordance with American National Standard B30.2.

.03 Maximum Voltage

The voltage at pendent or portable control stations shall not exceed 150 volts alternating current or 300 volts direct current.

NEMA Standard 7-14-1982.

*For systems with power conversion equipment on the crane, the current shall be the equivalent input current.

Copyright National Electrical Manufacturers Association
Provided by IHS under license with NEMA
No reproduction or networking permitted without license from IHS
Not for Resale

ICS 3-442.16 CONTROL CIRCUIT PILOT DEVICE RATING AND APPLICATION

.01 Ratings

Ratings for control circuit contacts for pushbuttons, master switches, limit switches, and auxiliary contacts which operate directly into contactor operating coil circuits shall be in accordance with ICS 2-125. Special purpose devices shall be applied in accordance with their published ratings.

.02 Application Guide

(a) *Pushbuttons*
See ICS 2-216.80.

(b) *Limit Switches*
See ICS 2-225.80.

(c) *Auxiliary Contacts*
See ICS 2-218.80 and 2-221.80.

(d) *Master Switches*

The make and break ratings and test values shown in Tables 2-125-1 and 2-125-2 shall not be used as application ratings where the total number of operations is expected to exceed by three to four times the number specified in the test conditions described in Part ICS 2-125.

When the load is an alternating-current electromagnetically operated mechanical device whose coil current may be interrupted occasionally before completion of its stroke, such as in jogging, the break current of the load shall be considered to be 50 percent of the make current of the load.

NEMA Standard 5-19-1986.

Copyright National Electrical Manufacturers Association
Provided by IHS under license with NEMA
No reproduction or networking permitted without license from IHS
Not for Resale

Part ICS 3-443

DC AND AC CONTROLLERS FOR CRANES

The standards in this part apply to controllers for direct-current and wound-rotor alternating-current motors used with electric powered cranes. Part ICS 3-442 also applies to the controllers covered in this part. The definitions and standards of Part ICS 3-100 and NEMA Standards Publication No. ICS 1 apply to this part unless otherwise specified.

CONSTANT-POTENTIAL MAGNETIC CONTROLLERS FOR DC MOTORS

ICS 3-443.01 CONTROLLER CONTACTORS

.01 Contactor Interrupting Ability

Contactors shall have a load-current interrupting ability in accordance with ICS 2-110.05.02 (Class B) of NEMA Standards Publication No. ICS 2.

.02 Ratings of Line and Directional Contactors at 230 to 250 Volts

The intermittent-duty horsepower and current ratings of contactors used in the power circuits of direct-current controllers at 230 and 250 volts shall be.

(a) In accordance with Table 3-443-1.

(b) Not less than the intermittent-duty horsepower and current ratings of the motors used for cranes.

.03 Ratings of Line and Directional Contactors at Voltages other than 230 to 250 Volts

The ratings of line and directional contactors at 500 or 550 volts shall be in accordance with Table 3-443-2. A straight line interpolation shall be used for voltages between 250 volts and 500 volts.

.04 Ratings of Accelerating, Plugging and Low-torque Contactors

Accelerating, plugging and low-torque contactors up to and including size 6 shall have the same rating as line or directional contactors; contactors above size 6 that do not carry all of the motor current need not have the same rating as line or directional contactors.

.05 Ratings of Common-line Contactors used for Grouped Protection

The size of contactors used for grouped protection (responding to overload or undervoltage relays) shall be as shown in Table 3-441-1 for 230 to 250 volts and in Table 3-443-2 for 500 to 550 volts. At voltages between 250 and 500 volts, a straight line interpolation shall be used to determine the intermittent-duty rating of the power circuit contactors used for grouped protection. In no case shall the size of contactors used for grouped protection be less than the rating of the largest contactor used on any of the protected controllers. The 8-hour open rating of the power circuit contactors used for grouped protection shall be not less than that which meets the more severe of the following requirements:

(a) Fifty percent of the sum of the full-load currents of all of the intermittent duty motors.

(b) Seventy-five percent of the full-load current of the intermittent-duty motor or motors required for the crane motion having the highest horsepower.

NEMA Standard 11-6-1975.

ICS 3-443.02 NUMBER OF ACCELERATING CONTACTORS

The number of accelerating contactors per motion for magnetic controllers is exclusive of the plugging or low-torque contactor and shall be no less than that shown in Table 3-443-3.

NEMA Standard 11-6-1975.

ISC 3-443.03 RATING OF CONTROLLER POWER CIRCUIT ISOLATING MEANS

Each controller power circuit isolating means shall have a current rating not less than the 8-hour open ampere rating of the line contactor of the circuit which it isolates.

NEMA Standard 11-6-1975.

ISC 3-443.04 EQUIPMENT REQUIRED

Magnetic controllers shall have the number of accelerating contactors specified in Table 3-443-3, the equipment listed in Table 3-443-4 and, if grouped protection is specified, the equipment listed in Table 3-443-5.

NEMA Standard 11-6-1975.

Copyright National Electrical Manufacturers Association
Provided by IHS under license with NEMA
No reproduction or networking permitted without license from IHS
Not for Resale

Table 3-443-1
RATINGS AT 230 TO 250 VOLTS OF DC CONTACTORS FOR CONSTANT-POTENTIAL CONTROLLERS

Size of Contactor	8-hour Open Rating, Amperes	Maximum Intermittent-duty Rating, Amperes	Rating for Controller Maximum Horsepower	Rating for Grouped Protection	
				Maximum Total Motor Horsepower	Maximum Horsepower for Any Motion
1	25	30	7-1/2	10	7-1/2
2	50	67	15	22	15
3	100	133	35	55	35
4	150	200	55	80	55
5	300	400	110	160	110
6	600	800	225	320	225
7	900	1200	330	480	330
8	1350	1800	500	725	500
9	2500	3330	1000	...	...

Table 3-443-2
RATINGS AT 500 OR 550 VOLTS OF DC CONTACTORS FOR CONSTANT-POTENTIAL CONTROLLERS

Size of Contactor	Rating for Controller Maximum Horsepower	Rated for Grouped Protection	
		Maximum Total Motor Horsepower	Maximum Horsepower for Any Motion
1	10	15	10
2	25	35	25
3	55	80	55
4	80	120	80
5	165	240	165
6	330	480	330

Table 3-443-3 ▲
NUMBER OF ACCELERATING CONTACTORS

Maximum Horsepower		Minimum Number of Accelerating Contactors per Motion for DC Controllers	
At 250 Volts	At 550 Volts	Class I Controller	Class II Controller
7-1/2	10	2	2
15	25	3	2
35	55	3	3
55	80	3	3
110	165	3	...
225	330	4	...
330	...	4	...
500	...	4	...
1000	...	4	...

▲Revised 6-21-1979.

Copyright National Electrical Manufacturers Association
Provided by IHS under license with NEMA
No reproduction or networking permitted without license from IHS Not for Resale

ADJUSTABLE-VOLTAGE CONTROLLERS FOR DC MOTORS

ICS 3-443.05 CONTROLLER CONTACTORS ▲

Each contactor handling direct-current power shall have a load-current interrupting ability in accordance with ICS 2-110.05.02 (Class B) of NEMA Standards Publication No. ICS 2 and shall be selected so that the horsepower rating and the 8-hour or intermittent-duty current rating in Table 3-443-6 are not less than the current and time ratings of the associated motor(s).

NEMA Standard 11-6-1975.

ICS 3-443.06 RATING OF LOOP OR LINE CONTACTOR ▲

The loop or line contactor shall have a continuous current rating not less than 75 percent of the full-load current used to determine the intermittent-duty rating of the motor(s) or, if ahead of the power conversion equipment, the intermittent current shall be the equivalent input current.

NEMA Standard 11-6-1975.

ICS 3-443.07 EQUIPMENT REQUIRED

Adjustable voltage controllers shall have the equipment listed in Table 3-443-7.

NEMA Standard 11-6-1975.

Table 3-443-6
RATINGS FOR DC CONTACTORS FOR ADJUSTABLE-VOLTAGE CONTROLLERS

Size of Contactor	8-hour Open Rating, Amperes	Maximum Intermittent-duty Rating, Amperes	Maximum Horsepower at 230 Volts*
1	25	30	7-1/2
2	50	67	15
3	100	133	35
4	150	200	55
5	300	400	110
6	600	800	225
7	900	1200	330
8	1350	1800	500
9	2500	3330	1000

* For other voltages, the horsepower is directly proportional to the voltage up to a maximum of 600 volts.

Table 3-443-7
MINIMUM EQUIPMENT FOR CLASS I AND II ADJUSTABLE-VOLTAGE CONTROLLERS FOR DC MOTORS

	Bridge or Trolley	Hoist
1. Control circuit fuse(s), switch and fuse(s), circuit breaker or fuse pullout.*	X	X
2. Automatically reset inverse time trip running overload relay, one for each motor circuit or, when specified, an integral motor thermal sensing device	X	X
3. Automatically reset instantaneous trip overload relay for each motor circuit or, in a common line, for a pair of motors unless equivalent protection is provided	X	X
4. Undervoltage protection for each motor	X	X
5. If alternating-current to direct-current static conversion equipment is used, short-circuit protection	X	X
6. Set(s) of static reversing devices or mechanically interlocked reversing contactors	X	X
7. Adjustable means to provide a limit on acceleration or torque	X	X
8. Set(s) of devices to provide speed control in lowering overhauling loads	...	X
9. Protection against motor shunt field loss	X	X
10. If alternating-current to direct-current static conversion equipment is used, a direct-current loop contactor or a line contactor	X	X
11. If motor-generator equipment is used, a direct-current loop contactor or its equivalent	X	X
12. Set of switches to permit emergency operation of one or more motors on multi-motor drives when required by the particular application	X	X
13. Brake relay when required by the particular application	X	X
14. Motor and/or generator shunt field discharge means when required	X	X

* This item may be common to all motors.

Copyright National Electrical Manufacturers Association
Provided by IHS under license with NEMA
No reproduction or networking permitted without license from IHS
Not for Resale

MAGNETIC CONTROLLERS FOR AC WOUND-ROTOR MOTORS**

ICS 3-443.08 CONTROLLER CONTACTORS

.01 Contractor Interrupting Ability

Contactor shall have a Class A load-current interrupting ability in accordance with Part ICS 2-100 of NEMA Standards Publication No. ICS 2.

.02 Ratings of Line and Directional Contactors

The horsepower and intermittent-duty current ratings of contactors used in the power circuits of alternating-current controllers shall be not less than the corresponding ratings of the intermittent-duty motors used for cranes. Contactor current and horsepower ratings shall be as shown in Table 3-443-8.

.03 Ratings of Line and Directional Contactors at Voltages not Listed in Table 3-443-8 but Less than 460 Volts

For voltages not listed but less than 460 volts, the intermittent-duty current rating of the contactors shall be in accordance with ICS 3-443.08.02 and not less than the full-load current used to determine the intermittent rating of the motor.

NEMA Standard 11-6-1975.

.04 Ratings of Accelerating Plugging and Low Torque Contactors ▲

Accelerating plugging and low torque contactors shall have an intermittent-duty current rating not less than the full-load secondary current of the motor. When used for motor secondary control, the intermittent-duty ampere rating of a three-pole alternating-current contactor, with its poles connected in delta, shall be 1.5 times the intermittent-duty current rating shown in Table 3-443-8.

NEMA Standard 7-14-1982.

.05 Ratings of Line Contactors Used for Grouped Protection

The size of contactors used for grouped protection (responding to overload or undervoltage relays) shall be as shown in Table 3-443-8 but not less than the rating of the largest primary contactor used on any of the protected controllers.

NEMA Standard 11-6-1975.

ICS 3-443.09 NUMBER OF ACCELERATING CONTACTORS

The number of accelerating contactors per motion for magnetic controllers is exclusive of plugging or low-torque contactors and shall be no less than that shown in Table 3-443-9.

NEMA Standard 11-6-1975.

ICS 3-443.10 RATING OF CONTROLLER POWER CIRCUIT ISOLATING MEANS

Each controller power circuit isolating means shall have a current rating not less than the 8-hour open ampere rating of the line contactor of the circuit which it isolates.

NEMA Standard 11-6-1975.

ICS 3-443.11 EQUIPMENT REQUIRED

Magnetic controllers shall have the number of accelerating contactors specified in Table 3-443-9, the equipment listed in Table 3-443-10 and, if grouped protection is specified, the equipment listed in Table 3-443-11.

NEMA Standard 11-6-1975.

Table 3-443-8
AC CONTACTOR RATINGS

Size of Contactor	8-hour Open Rating, Amperes	Maximum Intermittent-duty Rating, Amperes*	Rating for Controller Maximum Horsepower		Rating for Grouped Protection: Maximum Total Motor Horsepower		Rating for Grouped Protection: Maximum Horsepower for Any Motion	
			230 Volts	460 and 575 Volts	230 Volts	460 and 575 Volts	230 Volts	460 and 575 Volts
0	20	20	3	5	6	6	3	5
1	30	30	7-1/2	10	10	20	7-1/2	10
2	50	67	20	40	30	60	20	40
3	100	133	40	80	63	125	40	80
4	150	200	63	125	110	225	63	125
5	300	400	150	300	225	450	150	300
6	600	800	300	600	450	900	300	600
7	900	1200	450	900	675	1350	450	900
8	1350	1800	600	1200	900	1800	600	1200

* The ultimate trip current of overload (overcurrent) relays or other motor protective devices used shall not exceed 115 percent of these values of 125 percent of the motor full-load current, whichever is smaller.

**For squirrel cage motors, refer to ICS 2-321.

▲ Revised 7-14-1982.

Copyright National Electrical Manufacturers Association
Provided by IHS under license with NEMA
No reproduction or networking permitted without license from IHS
Not for Resale

Part ICS 3-446

HEAVY DUTY (MILL TYPE) DC MAGNETIC CONTACTORS 600 VOLTS AND LESS

Part ICS 3-446 applies to the contactor portion of the controllers covered by Parts ICS 3-441, 3-442, and 3-443. Part ICS 2-110 applies to this part unless otherwise specified. Part ICS 1-109 also applies to this part.

DEFINITIONS

ICS 3-446.01 Eight-hour Rating

Duty in which the main contacts of a contactor remain closed while carrying a steady current long enough to reach thermal equilibrium but not for more than 8 hours without interruption.

NEMA Standard 5-19-1986.

This is the basic duty on which the rated thermal current of the apparatus is determined. Interrupting means breaking of the current by operation of the contactor.

Authorized Engineering Information 5-19-1986.

GENERAL INFORMATION AND FEATURES

ICS 3-446.05 CONTACT FORMS:

.01 Power Contact Forms

DC Contactors are single-pole or multi-pole devices. Poles are Normally Open, Normally Closed, or both.

NEMA Standard 5-19-1986.

.02 Auxiliary Contact Form

Auxiliary contacts, when provided, shall be in accordance with Part ICS 2-125.

NEMA Standard 5-19-1986.

ICS 3-446.06 MECHANICAL INTERLOCKING

Contactors shall be supplied with provision for the addition of mechanical interlocking to prevent simultaneous closing of two Normally Open Contactors. Minimum interlocking provision shall be for contactors that are horizontally adjacent and of the same rating.

NEMA Standard 5-19-1986.

Copyright National Electrical Manufacturers Association
Provided by IHS under license with NEMA
No reproduction or networking permitted without license from IHS
Not for Resale

RATINGS

ICS 3-446.20 CURRENT RATINGS OF DC CONTACTORS

Table 3-446-1
CURRENT RATINGS OF DC CONTACTORS

Size of Contactor	8-Hour Rating—Amperes	
	Enclosed*	Open
1	22.5	25
2	45	50
3	90	100
4	135	150
5	270	300
6	540	600
7	810	900
8	1215	1350
9	2250	2500

The above ratings are on a per pole basis.
*Contactor temperature rise shall be at least 10°C below those temperatures specified in Part ICS 1-109 when tested in open air at the rated enclosed current. (Refer to paragraph ICS 3-446.81 for enclosed applications.)

The intermittent-duty current ratings, open or enclosed, for direct current contactors for steel mill auxiliary duty and for crane and hoist duty, shall be as given in Parts ICS 3-441 and ICS 3-443.

NEMA Standard 5-19-1986.

ICS 3-446.21 VOLTAGE RATINGS

Voltage ratings shall be 125, 250 and 600 volts.

NEMA Standard 5-19-1986.

ICS 3-446.22 HORSEPOWER RATINGS OF DC CONTACTORS IF USED WITH GENERAL PURPOSE MAGNETIC CONTROLLERS

For horsepower ratings of DC contactors used with full voltage general purpose magnetic controllers, refer to Table 2-331-3, and for reduced voltage magnetic controller ratings, refer to Table 2-331-4 of Part ICS 2-331.

Authorized Engineering Information 5-19-1986.

ICS 3-446.23 MAKE AND BREAK CAPACITY

DC contactors shall be capable of making and breaking currents at the specified voltage and load condition as shown in Table 3-446-2. Verification tests for make and break capacities shall be as in paragraph ICS 3-446.41.

NEMA Standard 5-19-1986.

DESIGN TESTS AND PERFORMANCE

ICS 3-446.40 DESIGN TESTS

All of the test and performance requirements of Part ICS 2-110 shall apply except paragraph ICS 2-110.40. The following tests shall be run on one contactor without refurbishing, and in the following order: dielectric, make and break (operating overload), electrical endurance and a repeat of the dielectric.

NEMA Standard 5-19-1986.

ICS 3-446.41 MAKE AND BREAK (OPERATING OVERLOAD) DESIGN TEST

The tests for making and breaking capacities are to verify that the contactor is capable of making and breaking the (operating overload) currents stated in Table 3-446-2 and not to verify the contactor's electrical and mechanical endurance. Tests shall be run both open and enclosed to also determine minimum arcing clearances and minimum enclosure volume.

NEMA Standard 5-19-1986.

.01 Test Conditions

The contactor shall be mounted on a panel with steel plates in front of and above the contactor at distances corresponding to the manufacturer's published minimum arcing clearances for the open test and mounted in its

Copyright National Electrical Manufacturers Association
Provided by IHS under license with NEMA
No reproduction or networking permitted without license from IHS
Not for Resale

intended enclosure for the enclosed test. The contactor shall be connected as shown in the test circuit, Figure 3-446-1. The contactor enclosure or plates shall be connected to a 30-ampere non-time-delay cartridge fuse for the detection of fault current. The contactor shall be exercised by energizing the operating coil with rated coil voltage with the make time sufficiently long for the operating overload current to reach a steady state value, but not less than 100 milliseconds. The operating overload current flow period shall be less than 5 seconds. The time for one make/break cycle shall not exceed 1 minute.

All the poles of a multi-pole device shall be tested simultaneously.

On contactors equipped with Form C Power Contacts (refer to Part ICS 2-125) tests shall be conducted using Normally Open Contacts and then repeated on the same device using Normally Closed Contacts.

NEMA Standard 5-19-1986.

.02 Test Criteria

The contactor shall successfully make and break the current specified in Table 3-446-2 25 times in succession with power supply polarity as shown in Figure 3-446-1 immediately followed by 25 times with the power supply polarity reversed.

There shall be no permanent arcing, no flashover between poles, no opening of the fuse and no welding of the contacts during the test.

NEMA Standard 5-19-1986.

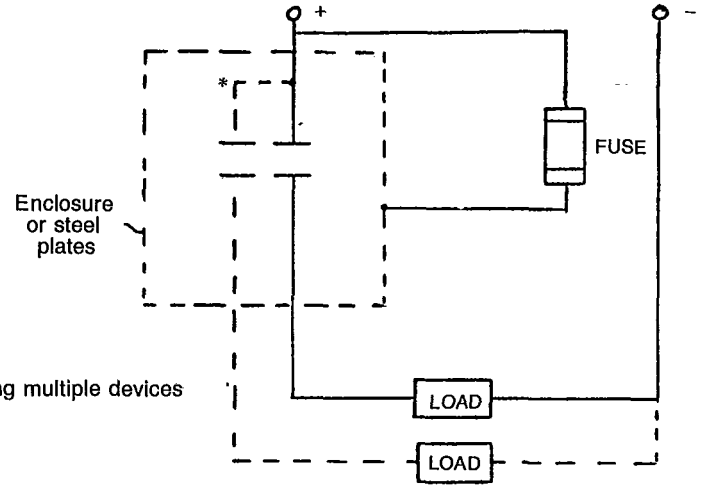

* Arrangements for testing multiple devices

Figure 3-446-1
DC TEST CIRCUIT
MAKE AND BREAK (OPERATING OVERLOAD) TEST CIRCUITS

Table 3-446-2
MAKE/BREAK (OPERATING OVERLOAD) TEST LEVELS

Make and Break		
I / I_e	V / V_e	$L / R_{(ms)}$*
4	1.1	7.5

where: I = test current
I_e = rated current (open) per table 3-446-1

V = test voltage (Apply the provisions of UL 508, paragraph 24.10 dated 8/19/77.)

*Tolerance ±15%

V_e = highest rated voltage (refer to paragraph ICS 3-446.21)

ICS 3-446.42 SHORT CIRCUIT (WITHSTANDABILITY)

(Under Consideration)

ICS 3-446.43 ARC CLEARANCE TEST DATA

Minimum arcing clearances and minimum enclosure volume determined by the make and break (operating overload) design test (paragraph ICS 3-446.41) shall be provided to the user when required.

NEMA Standard 5-19-1986.

Manufacturer should be consulted for reduced minimum arc clearance and minimum enclosure volume when the contactor is operated at lower than rated voltage or in multiple break circuits.

Authorized Engineering Information 5-19-1986.

Copyright National Electrical Manufacturers Association
Provided by IHS under license with NEMA
No reproduction or networking permitted without license from IHS
Not for Resale

ICS 3-446.44 MECHANICAL & ELECTRICAL ENDURANCE TESTS

The purpose of these tests is to verify a minimum mechanical and electrical endurance of a Heavy Duty DC Magnetic Contactor. Such a contactor functions to initiate and interrupt motor current and thereby directly or indirectly control the starting and stopping of various mechanisms. The endurance values specified do not represent the ultimate life of the contactor.

Authorized Engineering Information 5-19-1986.

.01 Mechanical Endurance Test

The mechanical endurance of DC contactors shall not be less than 3,000,000 no load cycles when tested in accordance with paragraph ICS 3-446.44.02.

NEMA Standard 5-19-1986.

The mechanical endurance of DC contactors relates to specified environmental and application conditions. Hence the number of no load cycles will be affected accordingly.

Authorized Engineering Information 5-19-1986.

.02 Test Conditions—Mechanical

The contactor shall be mounted in its intended mounting arrangement. The contactor shall be exercised by energizing the operating coil with rated coil voltage for a period of time sufficient to ensure complete sealing of contactor armature and removal of coil voltage for a period of time sufficient to enable stabilized change of contactor state. The time for one close, open cycle shall not exceed 5 seconds. Maintenance shall be restricted to cleaning or lubricating without dismantling, and replacing contacts shall be according to the manufacturer's recommendation.

NEMA Standard 5-19-1986.

.03 Test Analysis

The following mechanical life tests are chosen on the basis of a 90% confidence level. Either of the following two test methods may be used:

Single 8 Test—Eight contactors are tested up to the assigned mechanical endurance. If the number of failures does not exceed two, the test is considered passed.

Double 3 Test—Three contactors are tested up to the assigned mechanical endurance. The test is considered passed if there is no failure, and failed if there is more than one failure. Should there be one failure, then three additional contactors are tested up to the assigned mechanical endurance. Providing there is no additional failure, the test is considered passed. The test is failed if, at any time, there is a total of two or more failures.

Authorized Engineering Information 5-19-1986.

.04 Test Criteria—Mechanical

The contactor shall successfully complete the no load cycles specified before it is necessary to replace parts affecting proper contactor operation, other than contacts.

NEMA Standard 5-19-1986.

ICS 3-446.45 ELECTRICAL ENDURANCE TEST

.01 Electrical Endurance

The electrical endurance of DC contactors shall not be less than the on load cycles indicated in Table 3-446-3 when in accordance with paragraph ICS 3-446.45.03.

NEMA Standard 5-19-1986.

The electrical endurance of DC contactors relates to specific application conditions. Hence the number of on load cycles will be affected accordingly.

Authorized Engineering Information 5-19-1986.

Table 3-446-3
ELECTRICAL ENDURANCE

Make and Break			Number of On Load Cycles
I / I_e	V / V_e	$L / R_{(ms)}$*	
2.5	1	3.5	6,000

I_e = Rated Current (open) per Table 3-446-1
V_e = Highest Rated Voltage (refer to paragraph ICS 3-446.21)
*Tolerance ±15%

I = Test Current
V = Test Voltage

(Apply the provisions of UL 508 paragraph 24.10, dated 8/19/77.)

.02 Test Conditions—Electrical

The contactor shall be mounted in its intended mounting arrangement in the open. The contactor shall be exercised by energizing the coil with rated coil voltage with the make time sufficiently long for the load current to reach a steady state value, but not less than 100 milliseconds. The load current flow period shall be less than 2 seconds. The test cycle shall be repeated every 10 seconds.

NEMA Standard 5-19-1986.

.03 Test Criteria—Electrical

The contactor shall successfully meet load and endurance criteria specified in Table 3-446-3 before repairing or replacing contactor parts affecting proper contactor operation, including contacts.

NEMA Standard 5-19-1986.

Copyright National Electrical Manufacturers Association
Provided by IHS under license with NEMA
No reproduction or networking permitted without license from IHS
Not for Resale

ICS 3-446.46 TEMPERATURE RISE TESTS

Refer to Part ICS 1-109 for temperature rise test limits.

NEMA Standard 5-19-1986.

ICS 3-446.47 OPERATING VOLTAGE TEST

.01 A direct-current contactor operating coil shall withstand 110% of its rated voltage until thermal equilibrium is established, in an ambient of 40°C, without apparent damage.

.02 The contactor shall close successfully at 80% of its rated operating coil voltage after reaching a stabilized temperature rise at 100% of its rated operating coil voltage in an ambient temperature of 40°C. If tested at a lower ambient temperature, external resistance shall be added to the operating coil circuit to simulate the above conditions.

The temperature rise at 110% of rated voltage may exceed that specified in Table 1-109-2 of Part ICS 1-109.

NEMA Standard 5-19-1986.

MANUFACTURING

ICS 3-446.60 TERMINAL SIZES

Service connections shall be capable of accepting conductor sizes in accordance with Table 2-110-1 of Part ICS 2-110.

NEMA Standard 5-19-1986.

ICS 3-446.61 DEVICE MARKINGS

DC Contactors shall be marked with the following minimum data:

1. Rated Voltage
2. Rated Current and Basis of Rating (e.g. open, 8-hours)
3. Manufacturer's name or identifying mark
4. Device identification number
5. NEMA size designation
6. DC must appear

The operating coil(s) shall be marked in accordance with paragraph ICS 1-112.66.

NEMA Standard 5-19-1986.

APPLICATIONS

ICS 3-446.80 APPLICATION GUIDE

The following load characteristics should be considered when selecting contactors:

a. Maximum circuit-closing inrush current and duration
b. Maximum circuit interrupting current, voltage, and inductance
c. Frequency of operation and on time
d. RMS current for periodic loads (refer to Paragraph ICS 1-109.10.03, Part C)

Because of the endless variety of application conditions in terms of electrical loads, duty cycles, voltage fluctuations, mechanical vibration, environmental conditions, etc., contact life will vary. Manufacturer's recommendations should be obtained regarding specific applications.

If it is anticipated that a contactor will be required to interrupt currents at 10% or less of its open current rating, the manufacturer should be consulted.

If a contactor operates under load for more than eight hours without opening the power contacts, the contactor should be provided with power contacts suitable for continuous operation in the closed position.

Authorized Engineering Information 5-19-1986.

ICS 3-446.81 APPLICATION OF ENCLOSED CONTACTORS

DC contactors may be used at their enclosed ratings in enclosed locations where the interior temperature rise does not exceed 10°C above a maximum outside ambient of 40°C.

For interior temperature rises exceeding 10°C or external ambients exceeding 40°C, the manufacturer should be consulted regarding ratings, clearances, and ventilation.

Authorized Engineering Information 5-19-1986.

ICS 3-446.82 MAINTENANCE

A maintenance program and schedule should be established to meet the needs of each particular installation. The program should include, for example, tightening connections, inspecting to see that moving parts move freely, and for evidence of overheating, removing dust and dirt, and replacing contacts when worn or when the contact follow-up and pressure have been reduced to a level which might impair the operation of the device.

Authorized Engineering Information 5-19-1986.

Copyright National Electrical Manufacturers Association
Provided by IHS under license with NEMA
No reproduction or networking permitted without license from IHS Not for Resale

ICS 3-83 6470247 0001790 6 A-90-55

National Electrical Manufacturers Association
2101 L Street, N.W. Suite 300
Washington, D.C. 20037 (202) 457-8400

PROPOSED, NEW AND REVISED STANDARDS

ISS-3 Page 9
August 7, 1985

TO ALL REPRESENTATIVES OF MEMBER COMPANIES
IN THE SYSTEMS GROUP OF THE
INDUSTRIAL CONTROL AND SYSTEMS SECTION

Subject: NEMA Revision No. **1** to NEMA Standards
Publication No. **ICS 3-1983,** *Industrial Systems*

Dear Representative:

The first set of revised pages, dated March 1985, is enclosed for insertion in your copy of the subject publication. This revision was approved by the Codes and Standards Committee in March 1985.

A revised cover indicating that the standard now includes Rev. 1 is also attached. Please insert the revised pages carefully, as extra copies are not available.

Sincerely yours,

Krystyna Bagnato

Krystyna Bagnato
Standards Publications Editor

cc: Technical Committee
Known holders of ICS 3-1983

Copyright National Electrical Manufacturers Association
Provided by IHS under license with NEMA
No reproduction or networking permitted without license from IHS
Not for Resale

Table 3-304-3
RATINGS FOR ALTERNATING-CURRENT, 60 HERTZ, SOLID-STATE OUTPUTS

Continuous Rated Output Current Amperes, Rms	Maximum Surge Current, Two Cycles 60 Hz Amperes, Rms	Minimum Load Current Amperes, Rms	Maximum Leakage Current, mA Rms	
			At 12 thru 120 V	At 240 V
5	50	0.2	10	*
2	20	0.2	10	*
1	10	0.1	5	*
0.5	5	0.05	5	*
0.25	2.5	0.025	2.5	*
0.1	1.0	0.01	2.5	*

Maximum on-state voltage drop at continuous rated output current shall be specified by the manufacturer.
*Under consideration.

Table 3-304-4
RATINGS FOR DIRECT CURRENT SOLID-STATE OUTPUTS, SOURCE OR SINK MODE

Continuous Rated Output Current Amperes	Maximum Forward Voltage Drop, VDC	Maximum Leakage Current, mA			
		Logic Circuits 5-18 VDC	Power Circuits		
			12-48 VDC	49-125 VDC	126-250 VDC
*	*	*			
2.0	2.5	...	3.0	3.0	3.0
1.0	2.5	...	2.0	2.0	3.0
.5	2.5	...	2.0	2.0	3.0
.25	2.0	...	1.0	2.0	3.0
0.1	2.0	...	0.4	0.8	2.0

*The manufacturer shall specify which logic family or families (TTL, CMOS, etc.) are compatible with his logic circuit outputs.

The following transmission speeds, expressed in baud, shall be used for communication:

110	1200	4800
300	1800	9600
600	2400	19200

Procedures for the use of communication control characters shall be in accordance with American National Standard No. X3.28, *Procedures for the Use of the Communication Control Characters of American National Standard Code for Information Interchange in Specified Data Communication Links.*

NEMA Standard 1-28-1976.

DESIGN TESTS AND PERFORMANCE

ICS 3-304.40 VOLTAGE LIMITS

A programmable controller shall be capable of operating in each of its intended modes without malfunction when energized for:

(a) 6 Hours at rated frequency and 110 percent of rated voltage.

(b) 6 Hours at rated frequency and 90 percent of rated voltage.

NEMA Standard 1-28-1976.

ICS 3-304.41 VOLTAGE DIPS AND RECOVERY

(a) When a programmable controller is subjected to supply voltage dips of sufficient magnitude and duration to interfere with its functioning, all signal and power outputs shall go to their predetermined states with no false momentary signals and no loss of nonvolatile memory.

(b) When the supply voltage returns to normal, the following conditions shall prevail:

(1) Nonvolatile memory shall be intact.

Copyright National Electrical Manufacturers Association
Provided by IHS under license with NEMA
No reproduction or networking permitted without license from IHS
Not for Resale

(2) Nonretentive elements shall be reset.

(3) Retentive elements shall remain in the same state as when voltage was lost.

(4) Outputs shall resume their intended operation with no false momentary signals.

NEMA Standard 1-28-1976.

ICS 3-304.42 ELECTRICAL NOISE TOLERANCE

A programmable controller shall be capable of performing its intended function when, subject to the conditions set forth in Part ICS 2-230 of NEMA Standards Publication No. ICS 2 and the manufacturer's installation recommendations, its external input, output and power supply wiring is subjected to the noise test described in Part ICS 1-109 of NEMA Standards Publication No. ICS 1 with the programmable controller substituted for the "logic system enclosure" described.

Suggested Standard for Future Design 5-16-1977.

Figures 3-304-2, 3-304-3, and 3-304-4 show test setups which closely resemble the one described and shown in Part ICS 1-109 of NEMA Standards Publication No. ICS 1. The basic difference is that, in each case, the logic system is replaced by a programmable control system which is programmed to duplicate the logic system functionally. Also, Figures 3-304-2, 3-304-3, and 3-304-4 indicate the connections required for testing the input circuit, the output circuit and the power supply, respectively.

Six tests are required, Cases I and II for each of the input, output and power supply. Case I requires the ladder diagram shown in Figure 3-304-5; in this test, a check is made for the relay ICR picking up falsely. Case II requires the ladder diagram shown in Fig. 3-304-6; in this test, a check is made for the relay ICR dropping out falsely (IR must be forced on momentarily, by picking the reset button, to initiate the test).

The above test is a minimum test. It may be convenient on some programmable controllers to repeat the ladder diagram at various locations throughout the controller's memory. However, this additional testing is not a requirement of this standard.

Authorized Engineering Information 5-16-1977.

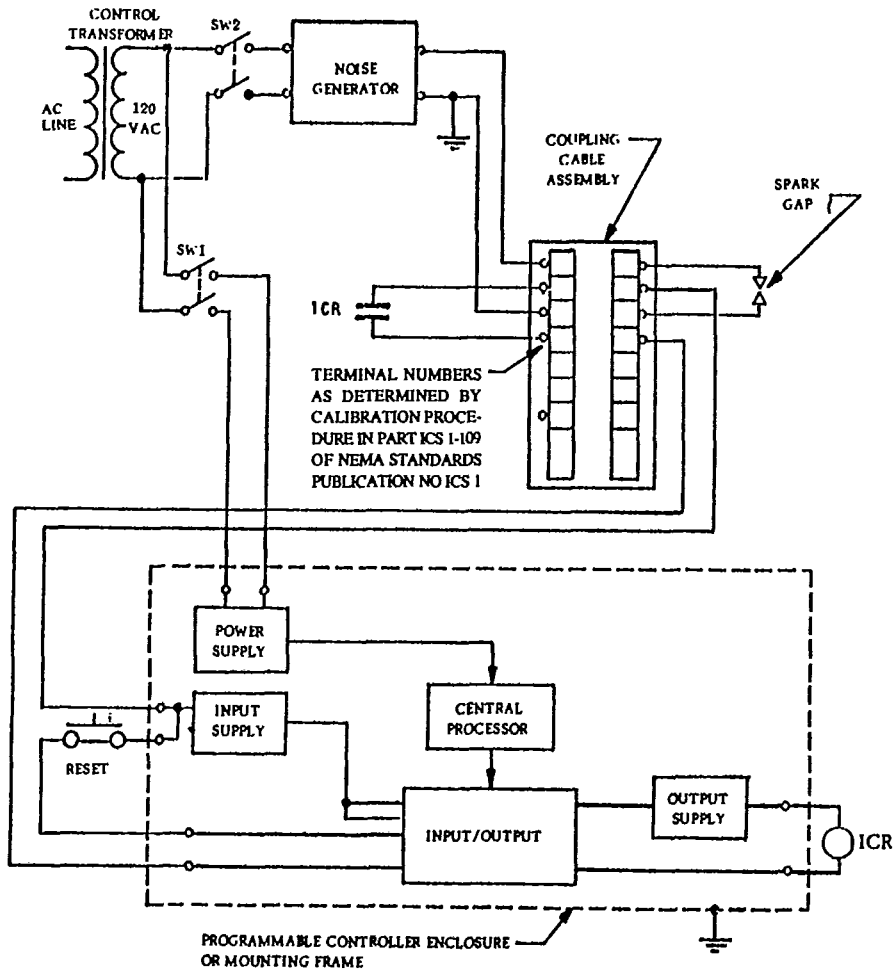

Figure 3-304-2
CONNECTION DIAGRAM FOR NOISE TEST OF INPUT CIRCUIT

Copyright National Electrical Manufacturers Association
Provided by IHS under license with NEMA
No reproduction or networking permitted without license from IHS
Not for Resale

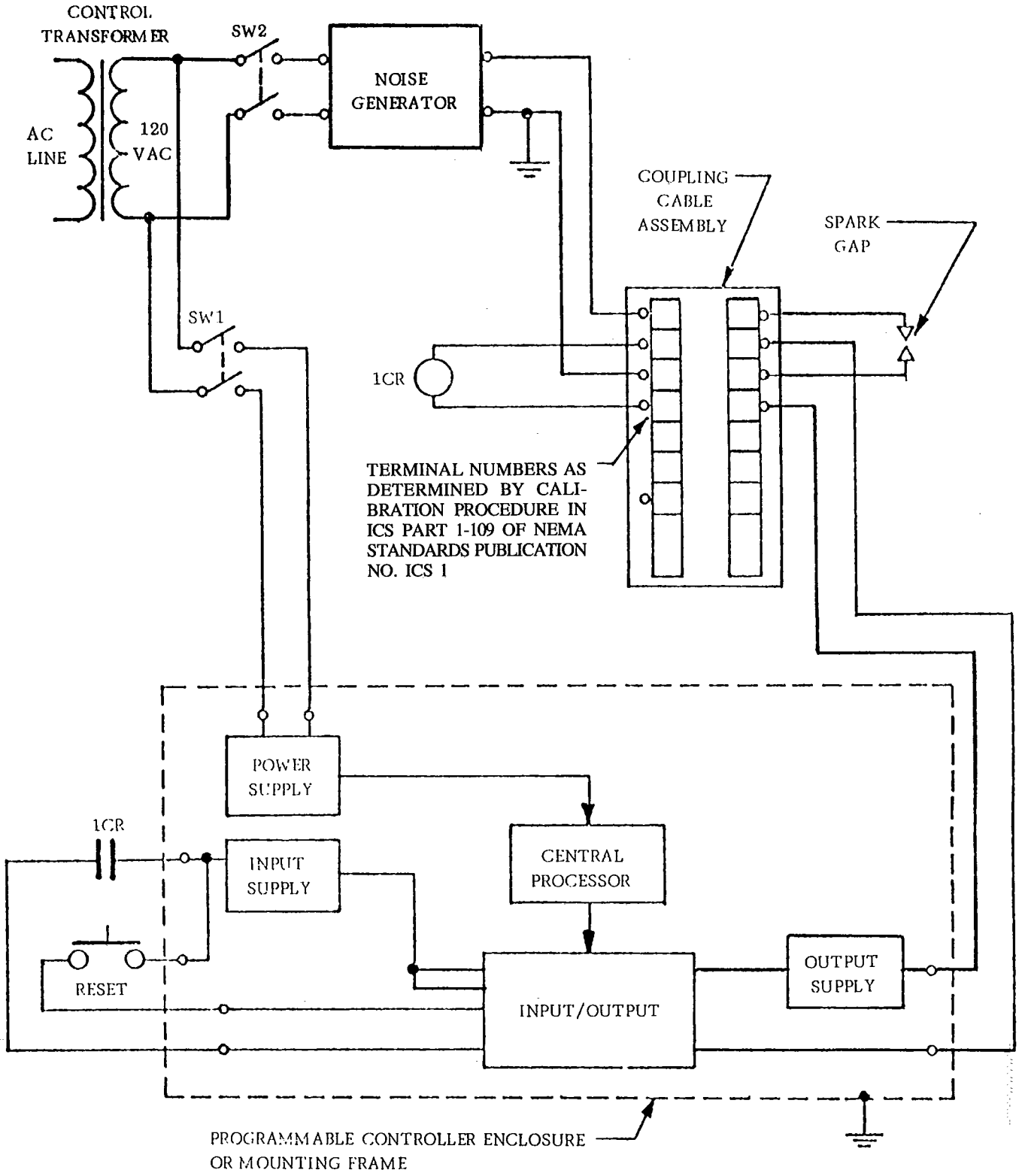

Figure 3-304-3
CONNECTION DIAGRAM FOR NOISE TEST OF OUTPUT CIRCUIT

Copyright National Electrical Manufacturers Association
Provided by IHS under license with NEMA
No reproduction or networking permitted without license from IHS
Not for Resale

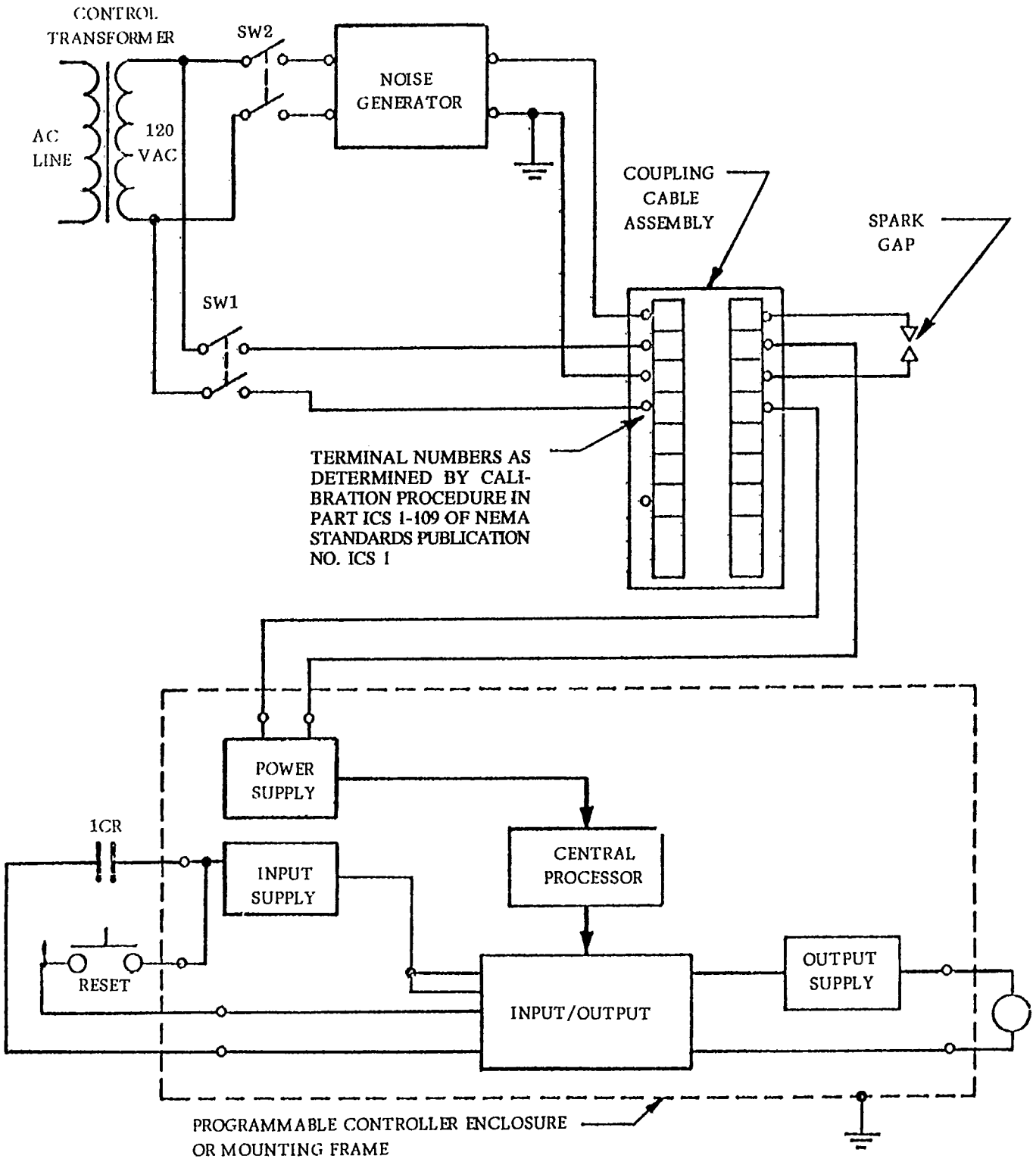

Figure 3-304-4
CONNECTION DIAGRAM FOR NOISE TEST OF POWER SUPPLY CIRCUIT

Copyright National Electrical Manufacturers Association
Provided by IHS under license with NEMA
No reproduction or networking permitted without license from IHS
Not for Resale

ICS 3-83 6470247 0001795 5 A-90-55

NEMA STANDARDS PUBLICATION/NO. ICS 3-1983

Including: Rev. 1—March 1985

nema

Industrial Systems

NEMA

NATIONAL ELECTRICAL MANUFACTURERS ASSOCIATION ■ 2101 L STREET, N.W., WASHINGTON, D.C. 20037

Copyright National Electrical Manufacturers Association
Provided by IHS under license with NEMA
No reproduction or networking permitted without license from IHS

Not for Resale

MARCH 1985

CONDENSED TABLE OF CONTENTS*▲

Given below is a condensed table of contents for NEMA Standards Publication No. ICS 3. Publication No. ICS 9 is a detailed table of contents for all NEMA Standards Publications for Industrial Controls and Systems and is supplied as a supplement to be used with NEMA Standards Publication No. ICS 3.

	Title	Page
Part ICS 3-100	GENERAL STANDARDS FOR INDUSTRIAL SYSTEMS	1
Part ICS 3-104	CLASSIFICATION OF SYSTEMS AND SUBSYSTEMS	1
Part ICS 3-106A	PERFORMANCE OF FEEDBACK CONTROL SYSTEMS	1
Part ICS 3-106B	PERFORMANCE OF SPEED, VOLTAGE AND CURRENT CONTROL SYSTEMS	1
Part ICS 3-106C	PERFORMANCE OF LOOP POSITION AND TENSION CONTROL SYSTEMS	1
Part ICS 3-106D	PERFORMANCE OF WIND AND UNWIND DRIVE SYSTEMS	1
Part ICS 3-202	DIGITAL POSITION ENCODERS	1
Part ICS 3-302	GENERAL-PURPOSE ADJUSTABLE-VOLTAGE PACKAGED-DRIVE SYSTEMS (WHERE DC ARMATURE POWER IS OBTAINED FROM AC LINES USING CONTROLLED SEMICONDUCTOR RECTIFIERS)	1
Part ICS 3-303	GENERAL-PURPOSE ADJUSTABLE-FREQUENCY DRIVE SYSTEMS USING SEMICONDUCTOR POWER CONVERSION	1 1
Part ICS 3-304	PROGRAMMABLE CONTROLLERS	1
Part ICS 3-441	DC MAGNETIC CONTROLLERS FOR METAL MILLS	1
Part ICS 3-442	GENERAL STANDARDS FOR CRANE CONTROLLERS	1
Part ICS 3-443	DC AND AC CONTROLLERS FOR CRANES	1
Part ICS 3-445	CRANE AND HOIST POWER CIRCUIT LIMIT SWITCHES	1
Appendix A	REFERENCED STANDARDS	A-1

* See the enclosed Publication No. ICS 9 for a detailed table of contents for all NEMA Standards Publications for Industrial Controls and Systems.
▲ Editorially revised.

© 1984 by National Electrical Manufacturers Association

Copyright National Electrical Manufacturers Association
Provided by IHS under license with NEMA
No reproduction or networking permitted without license from IHS
Not for Resale

FOREWORD

This Standards Publication, together with the others listed below, supersedes and revises the indicated Standards Publications of the Industrial Control and Systems Section. Also included in these publications is the information separately printed as NEMA Standards Publication No. IS 1.3-1977,* *Maintenance of Motor Controllers After a Fault Condition*; Standards Publication No. IS 2.1-1976,* *Safety Standards for Construction and Guide for Selection, Installation and Operation of Adjustable-speed Drive Systems*; and Standards Publication No. IS 2.2-1974,* *Specification Guide for Industrial Motor Drive Systems.*

Since Standards Publication No. ICS 1 applies as a general standard and Standards Publication No. ICS 6 applies to enclosures used for controls and systems apparatus, these two standards should be used in conjunction with each of the product standards.

NEMA Standards Publication No.	Supersedes
ICS 1-1978, *General Standards for Industrial Controls and Systems*	Part 1 (white pages) of NEMA Standards Publication No. ICS-1970, *Industrial Controls and Systems*
ICS 2-1978, *Industrial Control Devices, Controllers and Assemblies*	Part 2 (green pages) of NEMA Standards Publication No. ICS-1970, *Industrial Controls and Systems*
ICS 3-1978, *Industrial Systems*	Part 3 (yellow pages) of NEMA Standards Publication No. ICS-1970, *Industrial Controls and Systems*
ICS 4-1983, *Terminal Blocks for Industrial Control Equipment and Systems*	NEMA Standards Publication No. IS 4-1968, *Terminal Blocks for Industrial Control Equipment and Systems*
ICS 5-1978, *Resistance Welding Control*	NEMA Standards Publication No. IS 5-1974, *Resistance Welding Control*
ICS 6-1978, *Enclosures for Industrial Controls and Systems*	NEMA Standards Publication No. IS 1.1-1977, *Enclosures for Industrial Controls and Systems;* and Part ICS 1-110 of NEMA Standards Publication No. ICS-1970, *Industrial Controls and Systems*

This Standards Publication provides practical information concerning ratings, construction, test, performance and manufacture of industrial control equipment. These standards are used by the electrical industry to provide guidelines for the manufacture and proper application of reliable products and equipment and to promote the benefits of repetitive manufacturing and widespread product availability.

(Continued)

*The following NEMA Standards Publications will be revised and republished in November or December of 1978. Given below are the publication numbers of the Standards Publications which will eventually supersede the indicated publications.

NEMA Standards Publication No.	To Supersede
ICS 2.1-1978, (R 1983) *Seismic Testing of Motor Control Centers* (to be excerpted from NEMA Publication No. ICS 2)	IS 1.2-1974, *Seismic Testing of Motor Control Centers*
ICS 3.1-1978, (R 1983) *Safety Standards for Construction and Guide for Selection, Installation and Operation of Adjustable-speed Drive Systems* (to be excerpted from NEMA Publication No. ICS 3)	IS 2.1-1976, *Safety Standards for Construction and Guide for Selection, Installation and Operation of Adjustable-speed Drive Systems*
ICS 3.2-1978 *Specification Guide for Industrial Motor Drive Systems* (to be excerpted from NEMA Publication No. ICS 3)	IS 2.2-1974, *Specification Guide for Industrial Motor Drive Systems*
ICS 7-1978, *Maintenance of Motor Controllers After a Fault Condition*	IS 1.3-1977, *Maintenance of Motor Controllers After a Fault Condition*

Copyright National Electrical Manufacturers Association
Provided by IHS under license with NEMA
No reproduction or networking permitted without license from IHS
Not for Resale

NEMA standards represent the result of many years of research, investigation and experience by the members of NEMA, its predecessors, its Sections and Committees. They have been developed through continuing consultation among manufacturers, users and national engineering societies and have resulted in improved serviceability of electrical products with economies to manufacturers and users.

One of the primary purposes of this Standards Publication is to encourage the production of reliable control equipment which, in itself, functions in accordance with these accepted standards. Some portions of these standards, such as electrical spacings and interrupting ratings, have a direct bearing on safety; almost all of the items in this publication, when applied properly, contribute to safety in one way or another.

Properly constructed industrial control equipment is, however, only one factor in minimizing the hazards which may be associated with the use of electricity. The reduction of hazard involves the joint efforts of the various equipment manufacturers, the system designer, the installer and the user. Information is provided herein to assist users and others in the proper selection of control equipment.

The industrial control manufacturer has limited or no control over the following factors which are vital to a safe installation:

1. Environmental conditions.
2. System design.
3. Equipment selection and application.
4. Installation.
5. Operating practices.
6. Maintenance.

This publication is not intended to instruct the user of control equipment with regard to these factors except insofar as suitable equipment to meet needs can be recognized in this publication and some application guidance is given.

This Standards Publication is necessarily confined to defining the construction requirements for industrial control equipment and to providing recommendations for proper selection for use under normal or certain specific conditions. Since any piece of industrial control equipment can be installed, operated and maintained in such a manner that hazardous conditions may result, conformance with this publication does not by itself assure a safe installation. When, however, equipment conforming with these standards is properly selected and is installed in accordance with the *National Electrical Code* and properly maintained, the hazards to persons and property will be reduced.

NEMA Standards Publications are subject to periodic review. They are revised frequently to meet changing conditions and technical progress. Users should secure the latest editions. See the postal return card in the front of the Standards Publication for the proper procedure to obtain revision service for your copy of the publication.

Proposed or recommended revisions to this Standards Publication should be submitted to:

Manager, Engineering Department
National Electrical Manufacturers Association
2101 L Street, N.W.
Washington, D.C. 20037

Copyright National Electrical Manufacturers Association
Provided by IHS under license with NEMA
No reproduction or networking permitted without license from IHS
Not for Resale

SCOPE

The product scope of the Industrial Systems Group of the Industrial Control and Systems Section of NEMA which is responsible for the development of this Standards Publication is given below.

Scope of Industrial Systems Group

A. Systems and devices not falling within the product scope of the Control Group, principally used in industrial applications for regulating power utilization apparatus. These systems are assemblies or groups of components arranged to include one or more feedback loops. These systems may include, when necessary to the operation of the system, data logging, data processing and programming input components, even though they may not be in a feedback loop.

B. AC and DC adjustable-speed drive systems and other systems of similar characteristics whether regulated or unregulated.

This product scope specifically includes, but is not limited to:

1. Adjustable-speed systems of the automatically-regulated type, such as: rolling mill drives, paper mill drives, slasher drives. These include systems for regulating speed, tension, current, etc.
2. Machine tool control incorporating:
   a. programmed input
   b. feedback control of speed, position torque, etc.
   c. data logging and processing in feedback loops or as readouts.
3. Computer control of machines.
4. Industrial process regulating systems, excluding systems used solely for the control of temperature.
5. Register and synchronizing control.
6. Integrated mill control, including data logging, data processing, and programming.
7. Automatic warehousing, including control of warehouse conveyors, automatic stackers, etc.
8. Adjustable-speed mill systems.
9. Analog-Digital converters and transducers.
10. Digital display devices.
11. Semiconductor Power Converters and Inverters for Adjustable Speed Motors.
12. Energy Management Systems.

Certain classes of equipment are *not* included in the product scope. Examples of these are:

1. Elementary feedback loop combinations of components, such as:
   a. Float switch, motor starter, motor and pump.
   b. Limit switches, reversing controller, motor, machine table.
   c. Pressure switch, motor starter, motor and compressor.
   d. Light dimmers.
2. Relay-type interlock systems not a part of the regulating system, such as relay banks for interlocking related operations of machines. For example: machine tool relay panels, steel mill auxiliary relay and contactor panels.
3. Unregulated constant potential mill auxiliaries.
4. Specific components utilized in these systems and covered by the product scopes of other NEMA Sections.

In this product scope, a component is a functional element of a system, i.e., operational amplifier, computer element, encoder, tape reader, gauging equipment.

Copyright National Electrical Manufacturers Association
Provided by IHS under license with NEMA
No reproduction or networking permitted without license from IHS
Not for Resale

Part ICS 3-100

GENERAL STANDARDS FOR INDUSTRIAL SYSTEMS

The standards in this part apply to all other parts of this Standards Publication unless otherwise specified. The definitions and standards of NEMA Standards Publication No. ICS 1 apply to this part unless otherwise specified.

ICS 3-100.01 DEFINITIONS

Count-down Counter*

A count-down counter is one which is so arranged that it always decreases its count as successive input signals are received.

NEMA Standard 5-21-1962.

Count-up Counter

A count-up counter is one which is so arranged that it always increases its count as successive input signals are received.

NEMA Standard 5-21-1962.

Electronic Direct-current Motor Controller

An electronic direct-current motor controller, for the purposes of this standard, is a phase-controlled rectifying system using semiconductors or tubes of the vapor- or gas-filled variety for power conversion to supply the armature circuit or the armature and shunt-field circuits of a direct-current motor, to provide adjustable-speed, adjustable- and compensated-speed, or adjustable- and regulated-speed characteristics.

NEMA Standard 5-17-1971.

Feedback Elements

Feedback elements are those elements in the control system which operate in response to the directly controlled variable to produce a suitable feedback signal and transmit it to the summing point. (See Fig. 3-100-5.)

NEMA Standard 7-7-1965.

Indirectly Controlled System

An indirectly controlled system is that portion of the controlled system in which the indirectly controlled variable is changed in response to changes in the directly controlled variable.

NEMA Standard 7-7-1965.

Indoor (See NEMA Standards Publication No. ICS 6)

Indoor means suitable for installation within a building which protects the apparatus from exposure to the weather.

NEMA Standard 7-16-1969.

Reference-input Elements

Reference-input elements are those elements which operate in response to the command to produce a suitable reference input signal and transmit it to the summing point.

NEMA Standard 7-7-1965.

Response Time

Response time is the time required, following the initiation of a specified stimulus to a system, for an output going in the direction of necessary corrective action to first reach a specified value.

The response time shall be expressed in seconds. (See Figs. 3-100-2, 3-100-3 and 3-100-4.)

NEMA Standard 8-19-1964.

Rise Time

Rise time is the time required for the output of a feedback system (other than first-order) to make the change from a small specified percentage (often 5 to 10) of the steady-state increment to a large specified percentage (often 90 or 95), either before overshoot or in the absence of overshoot.

If the term "rise time" is unqualified, response to a step change is understood; otherwise the pattern and magnitude of the stimulus should be specified.

NEMA Standard 7-7-1965.

Settling Time

Settling time is the time required, following the initiation of a specified stimulus to a system, for a specified variable to enter and remain within a specified narrow band centered on its final value.

Settling time shall be expressed in seconds. (See Figs. 3-100-2 and 3-100-3.)

NEMA Standard 8-19-1964.

Speed Ratio Control

Speed ratio control is a control function which operates two drives at a preset ratio of speeds.

The adjustment range of a speed ratio control, when direct proportionality exists between the two drives as shown in Fig. 3-100-1, shall be expressed in percent plus and percent minus of the master drive speed setting over which the follower drive can be adjusted relative to the master drive speed.

*Editorially revised.

Copyright National Electrical Manufacturers Association
Provided by IHS under license with NEMA
No reproduction or networking permitted without license from IHS
Not for Resale

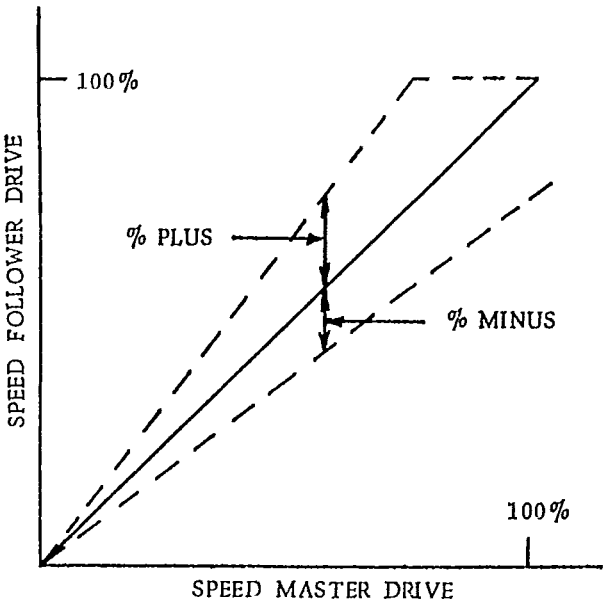

Fig. 3-100-1
SPEED MASTER DRIVE

NEMA Standard 9-25-1963.

When the master drive and follower drive have different speed ranges, the speed of the follower must be multiplied by the ratio of the rated speed of the master drive to the rated speed of the follower drive.

Authorized Engineering Information 9-25-1963.

System Efficiency (for a Drive System)

System efficiency is the ratio of the mechanical power supplied to load to the total input power under specified operating conditions. The input power includes that for auxiliary functions, such as motor field, phase control, switching equipment, overload protection, and fans.

NEMA Standard 8-20-1966.

Time Response

Time response is an output, expressed as a function of time (curve), resulting from the application of a specified input under specified operating conditions. (See Fig. 3-100-2 and 3-100-3.)

NEMA Standard 9-29-1960.

Transport Time

Transport time in a feedback system is the time required to move an object, element or information from one predetermined position to another.

NEMA Standard 3-15-1961.

Copyright National Electrical Manufacturers Association
Provided by IHS under license with NEMA
No reproduction or networking permitted without license from IHS

Not for Resale

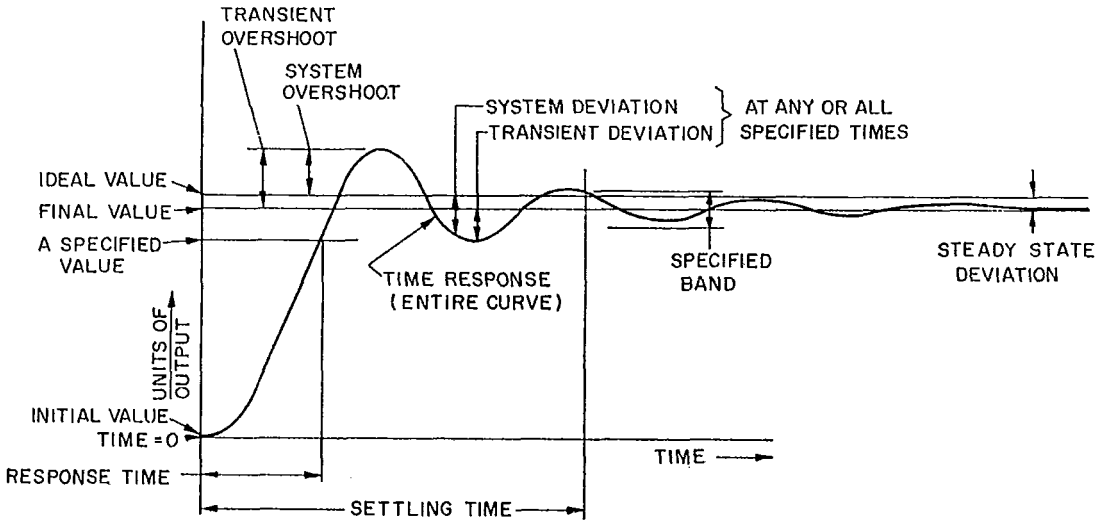

Fig. 3-100-2
RESPONSE FOLLOWING A STEP CHANGE OF REFERENCE INPUT

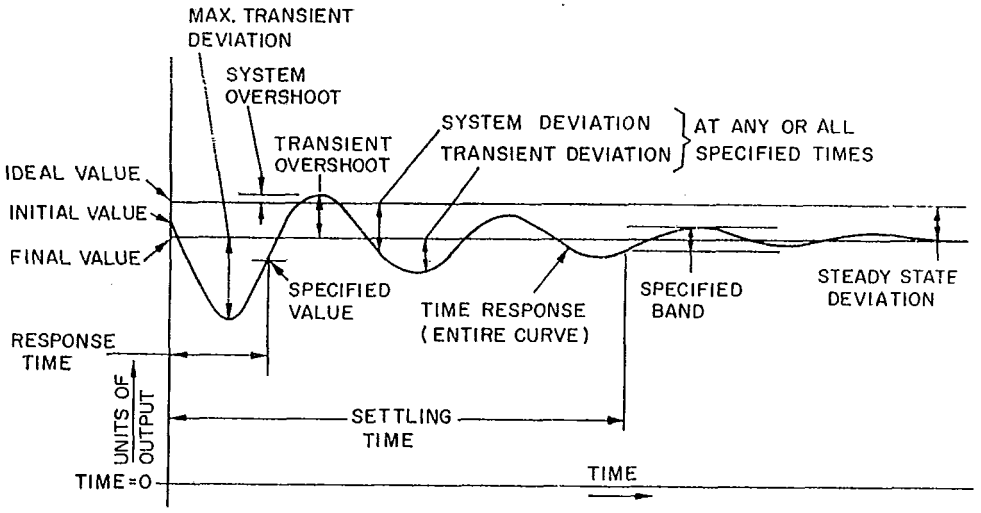

Fig. 3-100-3
RESPONSE FOLLOWING A STEP INCREASE IN LOAD
(NO REFERENCE INPUT CHANGE)

Copyright National Electrical Manufacturers Association
Provided by IHS under license with NEMA
No reproduction or networking permitted without license from IHS
Not for Resale

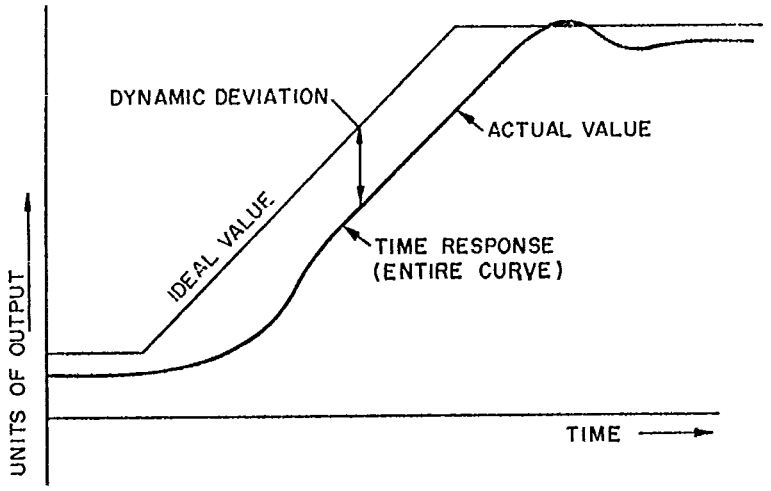

Fig. 3-100-4
RESPONSE WHEN REFERENCE INPUT IS CHANGED AT A SPECIFIED RATE

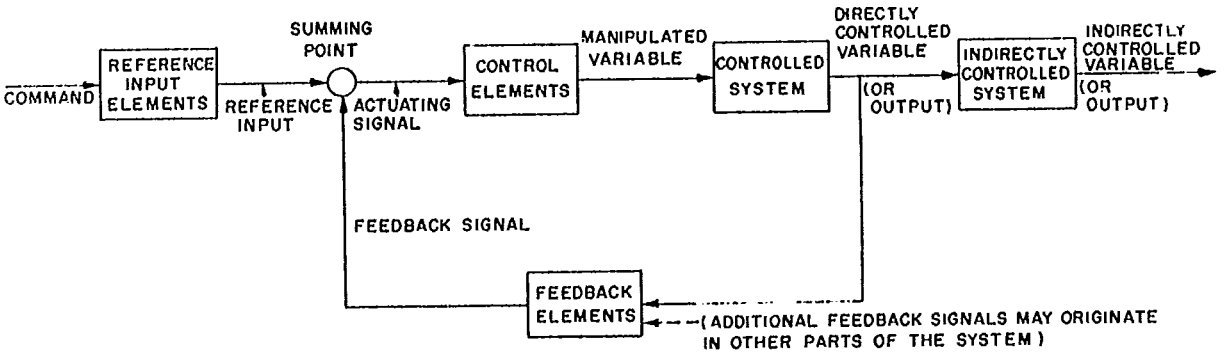

Fig. 3-100-5
BLOCK DIAGRAM OF FEEDBACK CONTROL SYSTEM CONTAINING ALL BASIC ELEMENTS

Copyright National Electrical Manufacturers Association
Provided by IHS under license with NEMA
No reproduction or networking permitted without license from IHS
Not for Resale

Part ICS 3-104

CLASSIFICATION OF SYSTEMS AND SUBSYSTEMS

The standards in this part apply to all other parts of this standards publication unless otherwise specified. The definitions and standards of Part ICS 3-100 and NEMA Standards Publication No. ICS I apply to this part unless otherwise specified.

DEFINITIONS

ICS 3-104.01 DEFINITIONS

Bandwidth (in a Feedback System)

Bandwidth is the interval separating two frequencies between which both the gain and the phase difference (of sinusoidal output referred to sinusoidal input) remain within specified limits.

NEMA Standard 7-7-1965.

Bode Diagram

A bode diagram is a plot of a transfer function in terms of log-gain and phaseangle values on a log-frequence base.

NEMA Standard 7-7-1965.

Directly Controlled System

A directly controlled system is the process or machine which is directly guided or restrained by the control elements to achieve a prescribed value of the directly controlled variable.

NEMA Standard 7-7-1965.

Feedback Control System

A feedback control system is a control system which operates to achieve prescribed relationships between selected system variables by comparing the functions of those variables and using the difference to effect control. (See Part ICS 3-104.05 for types of feedback control systems.)

NEMA Standard 1-25-1961.

Position Control System

A position control system is a control system which attempts to establish and/or maintain an exact correspondence between the reference input and the directly controlled variable, namely physical position. Its further characteristics are defined by the system type number given in ICS 3-104.05.

NEMA Standard 8-19-1964.

GENERAL INFORMATION AND FEATURES

ICS 3-104.05 CLASSIFICATION OF FEEDBACK CONTROL SYSTEMS BY BASIC TYPES

.01 Type O System (See Fig. 3-104-1)

A Type O feedback control system is one in which the directly controlled variable has both dynamic and steady-state deviations from the ideal value.

.02 Type I System (See Fig. 3-104-1)

A Type I feedback control system is one in which the directly controlled variable has a dynamic but no steady-state deviation from the ideal value.

.03 Type II System (See Fig. 3-104-1)

A Type II feedback control system is one in which the directly controlled variable has neither a dynamic nor steady-state deviation from the ideal value.

NEMA Standard 3-21-1962.

ICS 3-104.06 CLASSIFICATION OF FEEDBACK CONTROL SYSTEMS BY CONTROL SIGNAL

.01 Continuous-data Control System

A continuous-data control system is one in which the control signals are maintained substantially in a continuous form. The control signals may be analog or may be digital with a sampling cycle which is short with respect to system response.

.02 Sampling Control System

A sampling control system is one using intermittently observed values of signals such as the feedback signal or the actuating signal. The sampling is often done periodically.

Copyright National Electrical Manufacturers Association
Provided by IHS under license with NEMA
No reproduction or networking permitted without license from IHS
Not for Resale

.03 Step Control System

A step control system is one in which the manipulated variable assumes discrete predetermined values.

The condition for change from one predetermined value to another is often a function of the value of the actuating signal. When the number of values of the manipulated variable is two, it is called a two-step control system; when more than two, a multistep control system.

.04 Two-step Control System

A two-step control system is one in which the manipulated variable alternates between two predetermined values.

.05 On-off Control System

An on-off control system is a two-step control system in which a supply of energy to the controlled system is either on or off.

NEMA Standard 8-19-1964.

ICS 3-104.07 CLASSIFICATION OF FEEDBACK CONTROL SYSTEMS BY DIRECTLY CONTROLLED VARIABLE

The basic function of a control system is the regulation of the directly controlled variable. These variables may be, for example:

(a) Current
(b) Frequency
(c) Position
(d) Power
(e) Pressure
(f) Speed
(g) Temperature
(h) Tension
(i) Voltage

NEMA Standard 8-19-1964.

It may be desirable to identify functions in addition to the directly controlled variable in order to assure proper system operation. These auxiliary functions may include, for example:

(a) Acceleration rate
(b) Current limit
(c) Inertia compensation
(d) Speed limit
(e) Voltage limit
(f) IR compensation

Authorized Engineering Information 8-19-1964.

ICS 3-104.08 CLASSIFICATION OF CONTROLLED CONVERTERS

.01 Line-commutated Converters

The following designations are intended to describe the functional characteristics of converters, but not necessarily the circuits or components used:

(a) *Form A (Nonreversing, Noninverting) Converter*—A controlled rectifier which can produce a direct-current output of one polarity only and which is not capable of inverting energy from the load to the alternating-current power supply.
(b) *Form B (Reversing, Noninverting) Converter*—A controlled rectifier which can produce a direct-current output of either polarity and which is not capable of inverting energy from the load to the alternating-current power supply.
(c) *Form C (Inverting, Nonreversing) Converter*—A controlled rectifier which can produce a direct-current output of one polarity only and which is capable of inverting energy from the load to the alternating-current power supply.
(d) *Form D (Inverting, Reversing) Converter*—A controlled rectifier which can produce a direct-current output of either polarity and which is capable of inverting energy in either polarity from the load to the alternating-current power supply.

.02 Adjustable-frequency Output Converters

There are several forms of converters whose function is to produce a fixed or adjustable voltage and/or frequency alternating-current output. The following designations are intended to describe functional characteristics and may apply to both rotary and static-type converters.

(a) *Form FA Converter*—A converter whose input and output are both alternating current and where the frequency conversion is accomplished without intermediate conversion to direct current.
(b) *Form FB Converter*—A converter whose input is direct current and whose output is alternating current.
(c) *Form FC Converter*—A converter whose input and output are both alternating current and where the frequency conversion is accomplished with intermediate conversion to direct current.

NEMA Standard 11-17-1966.

Copyright National Electrical Manufacturers Association
Provided by IHS under license with NEMA
No reproduction or networking permitted without license from IHS
Not for Resale

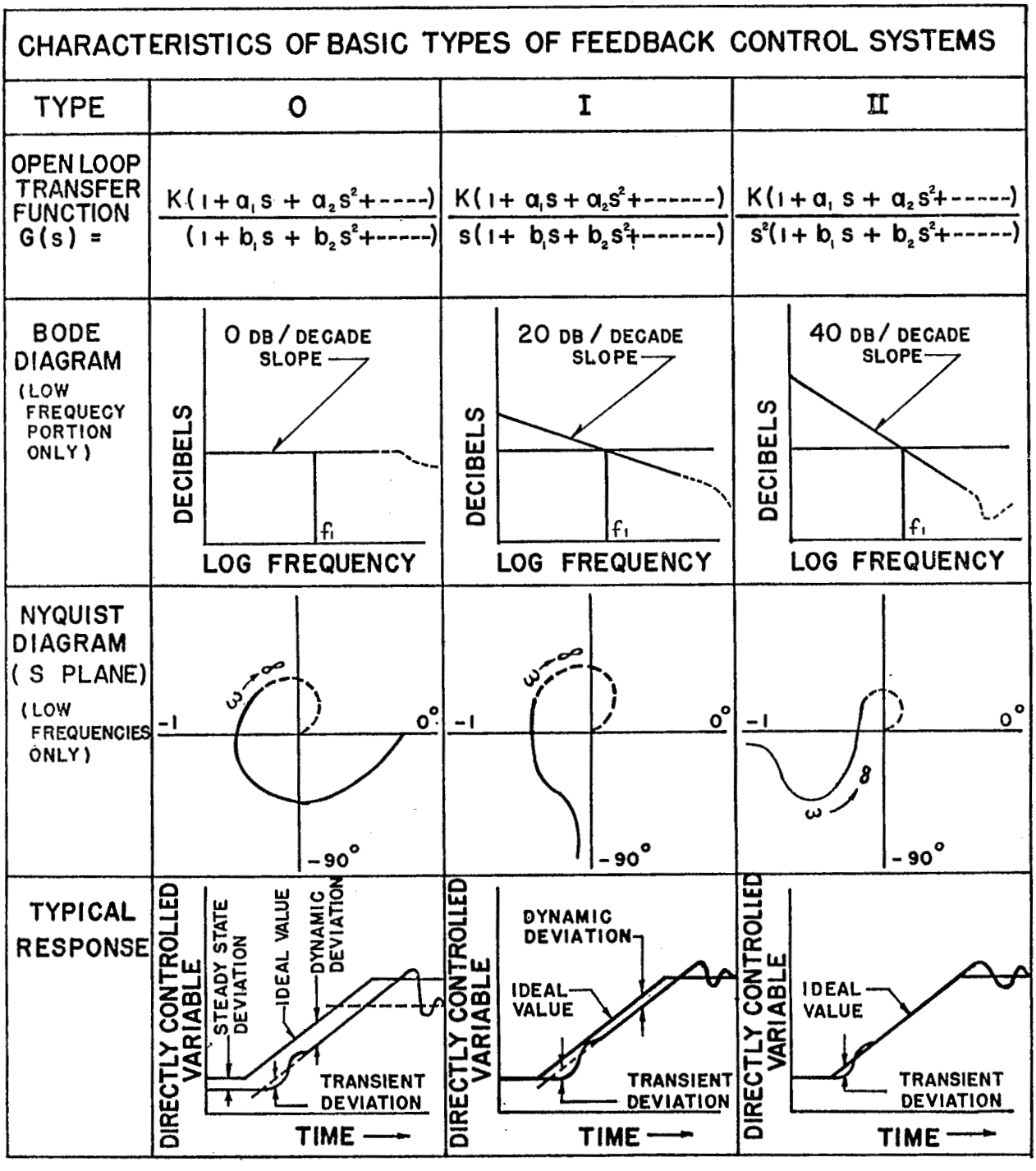

Transient and other deviations may be present but do not determine the type of system. (This sentence was approved as Authorized Engineering Information on 3-21-1962.)

Fig. 3-104-1
CHARACTERISTICS OF BASIC TYPES OF FEEDBACK CONTROL SYSTEMS

Copyright National Electrical Manufacturers Association
Provided by IHS under license with NEMA
No reproduction or networking permitted without license from IHS
Not for Resale

Part ICS 3-106A

PERFORMANCE OF FEEDBACK CONTROL SYSTEMS

The standards in this part apply to all other parts of this standards publication unless otherwise specified. The definitions and standards of Part ICS 3-100 and NEMA Standards Publication No. ICS 1 apply to this part unless otherwise specified.

DEFINITIONS

ICS 3-106A.01 DEFINITIONS

Analog

Analog pertains to information content which is expressed by signals dependent upon magnitude.

NEMA Standard 5-21-1962.

Analog Computer

An analog computer is one which operates internally with information represented in analog form.

NEMA Standard 5-21-1962.

Analog-to-digital Converter

An analog-to-digital converter is a network or device which produces a digital signal representing the magnitude of an analog signal.

NEMA Standard 5-21-1962.

Analog Signal

An analog signal is one which is solely dependent upon magnitude to express information content.

NEMA Standard 5-21-1962.

Arithmetic Unit

An arithmetic unit is that section of a computer where numerical operations other than program control are performed.

NEMA Standard 5-21-1962.

Closed Loop (Feedback Loop)

A closed loop is a signal path which includes a forward path, a feedback path and a summing point and which forms a closed circuit.

NEMA Standard 7-7-1965.

Operating Deviation Band

Operating deviation band is the total excursion (see Fig. 3-106A-1) of the directly controlled variable (unless another variable is specified) as a result of specified operating variables under steady-state conditions and within a specified range of these operating variables. It is expressed: (1) as a percentage of the maximum rated value of the directly controlled (or other specified) variable, or (2) for systems which have no readily definable base, such as position or temperature control systems, as absolute numbers.

NEMA Standard 11-13-1969.

Operating Variable

Operating variable is a specified variable, other than those arising from service conditions and drift, for which the feedback control system must correct in attempting to maintain the ideal value of the directly controlled variable.

NEMA Standard 9-21-1967.

Service Deviation Band

Service deviation band is the total excursion (see Fig. 3-106A-1) of the directly controlled variable (unless another variable is specified) as a result of drift and changes in service conditions within specified limits. It is expressed: (1) as a percentage of the maximum rated value of the directly controlled (or other specified) variable, or (2) for systems which have no readily definable base, such as position or temperature control systems, as absolute numbers.

NEMA Standard 11-13-1967.

GENERAL INFORMATION AND FEATURES

ICS 2-106A.05 DEVIATION BANDS

The steady-state performance of a feedback control system shall be described by two numbers, selected from Table 3-106A-1. The first number, representing the operating deviation band, shall correspond to the maximum deviation band due to the principal operating variable(s), and the second number, representing the service deviation band, shall correspond to the maximum deviation band due to service conditions.

While the total deviation may possibly be equal to the sum of the above deviations, it is unlikely that this extreme will be reached in practice.

Copyright National Electrical Manufacturers Association
Provided by IHS under license with NEMA
No reproduction or networking permitted without license from IHS

Not for Resale

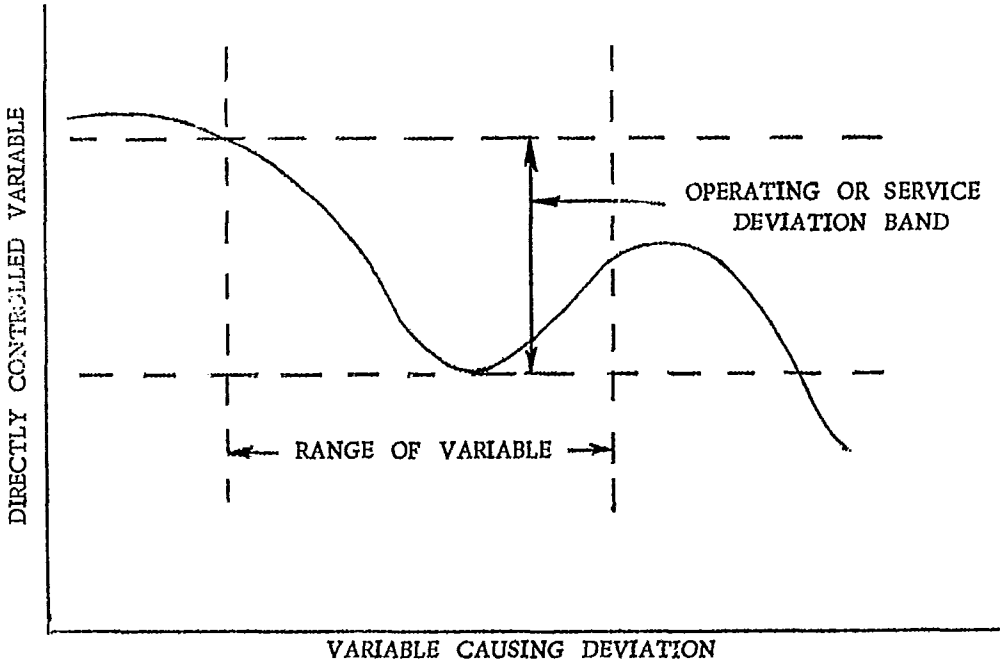

Fig. 3-106A-1
SERVICE DEVIATION BAND

EXAMPLE—"Operating Deviation Band 0.1%/Service Deviation Band 0.2%" designates a system with an 0.1 percent maximum deviation band due to the principal operating variable and other specified operating variables, and an 0.2 percent maximum deviation band due to service conditions.

The range of the directly controlled variable within which operating and service deviations apply shall be specified.

Suggested Standard for Future Design 11-13-1969.

Table 3-106A-1

Maximum Operating or Service Deviation Band, Percent
20
10
5
2
1
0.5
0.2
0.1
0.05
0.02
0.01

ICS 3-106A.06 SERVICE DEVIATION

The specified service deviation band selected from Table 3-106A-1 shall not be exceeded under any combination of applicable service conditions at any time during any 1-hour interval following a warm-up period of at least 30 minutes. Variation of the ambient temperature, within the limits of the applicable service conditions, shall be limited to a range of 15°C. Variation of the supply voltage, within the limits of the applicable service conditions, shall be limited to a range of 10 percent of rated voltage. The operating variables shall be held constant.

Suggested Standard for Future Design 11-13-1969.

ICS 3-106A.07 RELATION TO REFERENCE

The operating and service deviation bands apply for any selected value of the controlled variable within its specified range. When required by the application, the performance information should also include data on the steady-state relationship of the directly controlled variable to the reference. This aspect of performance is not included in the operating or service deviation bands.

Authorized Engineering Information 9-21-1967.

ICS 3-106A.08 TRANSIENT PERFORMANCE

If transient performance is important, the required transient responses to specific disturbances must be specified. Such disturbances might include those to the reference, those to the power source, and those reacting upon the controlled variable.

Authorized Engineering Information 9-21-1967.

Copyright National Electrical Manufacturers Association
Provided by IHS under license with NEMA
No reproduction or networking permitted without license from IHS
Not for Resale

Part ICS 3-106B

PERFORMANCE OF SPEED, VOLTAGE AND CURRENT CONTROL SYSTEMS

See Part ICS 3-106A, Performance of Feedback Control Systems for definitions and additional standards. The definitions and standards of Part ICS 3-100 and NEMA Standards Publication No. ICS 1 apply to this part unless otherwise specified.

GENERAL INFORMATION AND FEATURES

ICS 3-106B.05 OPERATING DEVIATION

The operating deviation band of the directly controlled variable when selected from Table 3-106B-1 for the commonly used systems shown shall not be exceeded for the range of the principal operating variable indicated.

For ranges of principal operating variables and operating deviation bands not included in this table, the specified operating deviation bands shall be selected from Table 3-106A-1, and the range of operating variables shall be specified. Service conditions shall be held constant.

Suggested Standard for Future Design 9-21-1967.

Table 3-106B-1

System	Principal Operating Variable		Operating Deviation Bands
	Name	Range in Percent of Rated Value	
Speed control with speed signal feedback	Torque	10 to 100	5, 2, 1, 0.5, 0.2 and 0.1 percent of rated speed
Speed control with motor armature voltage feedback	Torque	10 to 100	20, 10, 5 and 2 percent of rated speed
DC voltage control with voltage feedback	Load current	10 to 100	5, 2, 1, 0.5, 0.2 and 0.1 percent and rated voltage
AC voltage control with voltage feedback	Rms load current	10 to 100	5, 2, 1 and 0.5 percent of rated voltage
DC current control with current feedback for resistive or resistive/inductive load	Resistance	25 to 100	5, 2, 1 and 0.5 percent of rated current

Copyright National Electrical Manufacturers Association
Provided by IHS under license with NEMA
No reproduction or networking permitted without license from IHS
Not for Resale

Part ICS 3-106C

PERFORMANCE OF LOOP POSITION AND TENSION CONTROL SYSTEMS (SEE PART ICS 3-106A)

The standards in this part apply to processing systems whose object is to control the loop position and/or tension of a material in such forms as strip web, rod or wire. Unwind and rewind reel systems are not included. The definitions and standards of Part ICS 3-100 and NEMA Standards Publication No. ICS 1 apply to this part unless otherwise specified.

DEFINITIONS

ICS 3-106C.01 DEFINITIONS

Dancer Control

A form of loop control in which the feedback signal is derived from a transducer which responds to the position of a roll (dancer) which rides in the loop of the material.

NEMA Standard 11-13-1969.

Loop Control

Loop control is the effect of a control function or a device to maintain a specified loop of material between two machine sections by automatically adjusting the speed of at least one of the driven sections.

NEMA Standard 9-29-1960.

Maximum Loop Travel

The maximum permissible movement of the botton of the loop during any operating conditions, including transients. (See Fig. 3-106C-1.)

NEMA Standard 11-13-1969.

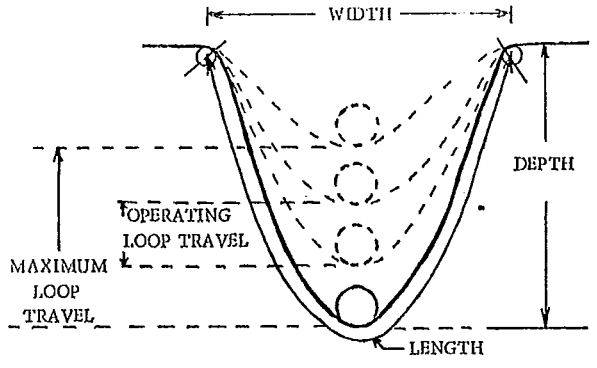

Fig. 3-106C-1

Operating Loop Travel

The maximum movement of the bottom of the loop during steady-state operation. (See Fig. 3-106C-1.)

NEMA Standard 11-13-1969.

Operating Storage

The change in the length of material in the loop as the result of the operating loop travel.

NEMA Standard 11-13-1969.

Operating Storage Time

The operating storage divided by the maximum rated line speed, expressed in seconds.

NEMA Standard 11-13-1969.

Running Tension Control

Running tension control is a control function which maintains tension in the material at operating speeds.

NEMA Standard 7-16-1963.

Stalled Tension Control

Stalled tension control is a control function which maintains tension in the material at zero speed.

NEMA Standard 7-17-1963.

Total Storage

The change in the length of material in the loop as the result of maximum loop travel.

NEMA Standard 11-13-1969.

Total Storage Time

The total storage divided by the maximum rated line speed, expressed in seconds.

NEMA Standard 11-13-1969.

Copyright National Electrical Manufacturers Association
Provided by IHS under license with NEMA
No reproduction or networking permitted without license from IHS
Not for Resale

TYPES OF SYSTEMS

ICS 3-106C.05 TORQUE CONTROL (WITH MOTOR ARMATURE CURRENT FEEDBACK)

Motor armature current is maintained at a desired value by the regulating action of a controller provided with motor armature current feedback. Substantially constant motor field flux is assumed. In some cases, it may be necessary to regulate field current. (Although compensation is not made for machinery and motor losses, sufficient control of tension is established for many applications.) See Fig. 3-106C-2.

The tension deviation will exceed the motor torque deviation because of variations in the losses in the driven machine. This is an important consideration when systems are operated at tension values where the torque necessary for tension is of a magnitude comparable to or lower than that required to overcome the losses in the driven machine.

Suggested Standard for Future Design 11-13-1969.

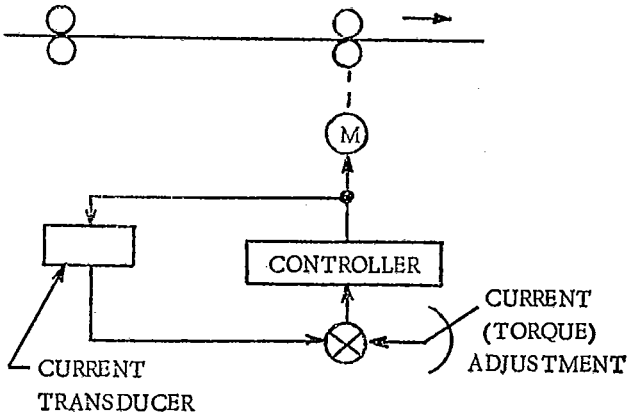

Fig. 3-106C-2

Characteristics	
Directly controlled variable	Motor armature current
Indirectly controlled variable	Motor torque
Principal operating variable	Line or motor speed
Range of principal operating variable	10–100 percent of rated value
Operating deviation bands (see ICS 3-106A.01)	20, 10 and 5 percent of rated motor torque*
Service deviation bands	See ICS 3-106A.01

* Other operating deviation bands, if required, shall be selected from Table 3-106A-1.

ICS 3-106C.06 LOOP POSITION CONTROL—CONSTANT FORCE LOADED

Tension is set and maintained by a constant force on a loop in the material, the force being provided by pneumatic or hydraulic cylinder, gravity, or a spring with substantially constant force over its operating range.* The action of the controller is to maintain the loop position within prescribed limits. The steady-state tension is substantially constant provided the sides of the loop are parallel. See Fig. 3-106C-3.

Suggested Standard for Future Design 11-13-1969.

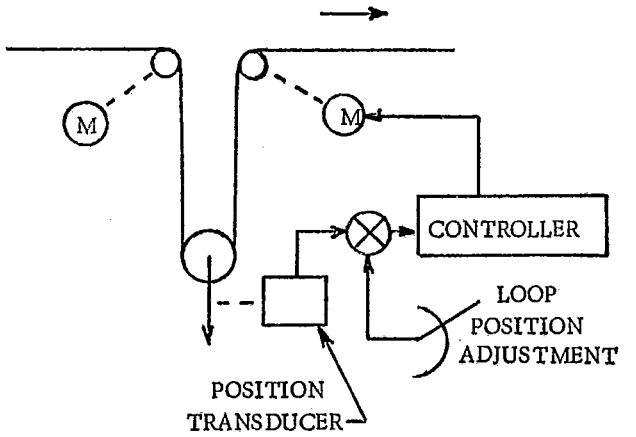

Fig. 3-106C-3

Characteristics	
Directly controlled variable	Loop position
Principal operating variable	Line or motor speed
Range of principal operating variable	0–100 percent of rated value†
Operating storage time, including service deviation	0.1, 0.2, 0.5 and 1.0 seconds

* In those cases where the design is such that the changing force characteristics of the spring are used to change the strip tension as a function of position, the characteristics of the tension feedback control system apply.
† Systems which require regulation at zero speed require reversible drives.

Copyright National Electrical Manufacturers Association
Provided by IHS under license with NEMA
No reproduction or networking permitted without license from IHS
Not for Resale

ICS 3-106C.07 LOOP POSITION CONTROL—FREE HANGING AND STORAGE LOOP

These loops are used in process systems to provide storage and/or tension isolation between sections of the system. These are position control systems with position feedback from such devices as photoelectric cells, proximity detectors, or lightly loaded dancers. When the primary purpose of the loop is storage, the total storage time is usually large relative to the operating storage time. When the operating storage time is very small, the manufacturer should be consulted. See Fig. 3-106C-4.

Suggested Standard for Future Design 11-13-1969.

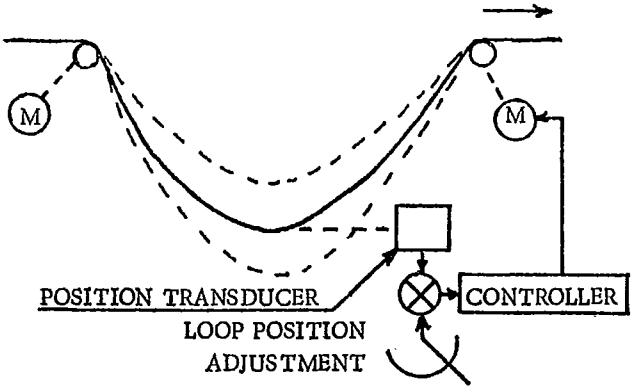

Fig. 3-106C-4

Characteristics	
Directly controlled variable	Loop position
Principal operating variable	Line or motor speed
Range of principal operating variable	0–100 percent of rated value*
Operating storage time, including service deviation	0.1, 0.2, 0.5 and 1.0 seconds

* Systems which require regulation at zero speed require reversible drives.

ICS 3-106C.08 TENSION FEEDBACK CONTROL

Tension is controlled in response to a signal from a tension sensing transducer. See Fig. 3-106C-5.

Suggested Standard for Future Design 11-13-1969.

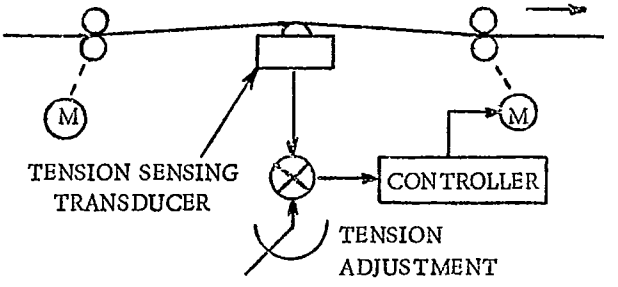

Fig. 3-106C-5

Characteristics	
Directly controlled variable	Tension (range to be specified)
Principal operating variable	Line or motor speed
Range of principal operating variable	10–100 percent of rated value
Operating deviation bands (see ICS 3-106A.01)	20, 10, 5 and 2 percent of maximum rated tension*
Service deviation bands	See ICS 3-106A.01

* Other operating deviation bands, if required, shall be selected from Table 3-106A-1.

Copyright National Electrical Manufacturers Association
Provided by IHS under license with NEMA
No reproduction or networking permitted without license from IHS
Not for Resale

APPLICATION

ICS 3-106C.80 APPLICATION INFORMATION

The following information should be furnished by the user or equipment builder:

(a) *System Arrangement*—A flow diagram including the relative position of mechanical features such as rolls, gearing, motors, looping pits, and reels.

(b) *Driven System Inertia*—The total inertia of each section of the driven equipment, referred to a single shaft (such as the motor shaft). Include inertia of driven and idler rools and gearing. System inertia affects system stability and performance during normal running as well as during acceleration and deceleration. When the control supplier does not supply motors, the motor inertias should be provided as separate items.

(c) *Driven Roll Diameter and Gear Ratio*

(d) *Required Acceleration and Deceleration Rates*

(e) *Low Speed Operation* —Means of threading and requirements for stalled and start-up tension. Include limitations on tension variation values and the speed ranges involved.

(f) *Broken Material Considerations*—Maximum permissible speed, and requirements for automatic shut-down when material breaks.

(g) *Steady-state Tension Range*—To be specified in pounds. The material to be processed will have a range of normal operating tensions. The specific running tension desired will vary with the cross section and yield strength of the material being run.

(h) *Transient Limitations*—Limitations on permissible torque, tension or position deviations during starting, stopping, acceleration and deceleration. Factors such as breakaway friction, operation of mechanical brakes, electrical braking, windage, and overcoming inertia may cause the operating loop travel or the operating deviation band to be exceeded. Expected line speed transients should be identified.

(i) *Driven System Losses*—The total losses of the driven equipment, referred to a single shaft (such as the motor shaft). Consideration should be given to losses which may be a function of speed.

(j) *Speed Range*—To be specified in terms of the linear velocity of the material. The operating speed range may differ from the total speed range. The operating speed range pertains only to that range wherein the limits of deviation bands apply. Both the operating range and the total range should be specified in such cases.

The motor may be of such a size that it cannot provide maximum tension at all line speeds. A schedule of tensions and line speeds should be provided to permit choosing the optimum size of the drive equipment.

(k) *Pit Dimensions*—A sketch indicating the geometry of the pit, the pass line, and the loop. On the sketch should be an indication of the normal range of position of the loop in the pit during controlled operation.

(l) *Loop Geometry*—The depth, width, and length of the loop, the maximum loop travel and operating loop travel (see Fig. 3-106C-1). Specify the location of the operating loop travel relative to the total depth.

(m) *Material*—List types of material, including dimensions and characteristics, indicating any environmental conditions in the process which will affect these characteristics.

Authorized Engineering Information 11-13-1969.

Copyright National Electrical Manufacturers Association
Provided by IHS under license with NEMA
No reproduction or networking permitted without license from IHS
Not for Resale

Part ICS 3-106D

PERFORMANCE OF WIND AND UNWIND DRIVE SYSTEMS

The standards in this part apply to drive systems whose objective is to control tension and/or speed for the winding and/or unwinding of material in such forms as strip, web, rod or wire. The machine for performing the function of winding or unwinding is known as a reeler, winder, beamer, coiler or spooler, depending on the industry or application. In these standards, the machine will be referred to as a winder or unwinder. The term "reel" refers to a core, with or without flanges, upon which the material is wound. The term "roll" or "coil" refers to the material wound upon the reel. The definitions and standards of Part ICS 3-100 and NEMA Standards Publication No. ICS 1 apply to this part unless otherwise specified.

DEFINITIONS

ICS 3-106D.01 DEFINITIONS

Center Winder (Unwinder)
A center winder (unwinder) is a winder in which the roll of material is driven (or held back on the case of an unwinder) through the reel on which the material is wound (see Fig. 3-106D-2).

NEMA Standard 9-15-1971.

Line Speed
Line speed is the rate of linear travel of material being conveyed or processed. It is expressed in linear units, such as feet or meters per minute.

NEMA Standard 9-15-1971.

Line Speed Range
Line speed range is the maximum and minimum line speeds between which the system is designed to operate. The system must remain within specified deviation bands throughout this range. (This does not normally include thread speed operation.)

NEMA Standard 9-15-1971.

Maximum Roll Build-up
Maximum roll build-up is the build-up from the empty reel diameter to the full roll diameter.

NEMA Standard 9-15-1971.

Maximum Roll Build-up Ratio
Maximum roll build-up ratio is the ratio of the maximum roll diameter to the empty reel diameter.

NEMA Standard 9-15-1971.

Roll Build-up (Build-down)
Roll build-up (build-down) is the change in roll diameter while winding (unwinding).

NEMA Standard 9-15-1971.

Roll Build-up Ratio
Roll build-up ratio is the ratio of the roll diameter to the empty reel diameter.

NEMA Standard 9-15-1971.

Surface Winder
A surface winder is a winder in which the roll of material is driven by friction rolls or belts in contact with the outer surface of the roll (see Fig. 3-106D-1).

NEMA Standard 9-15-1971.

Taper Tension
Taper tension is provision for varying tension with build-up and/or line speed as opposed to constant tension.

NEMA Standard 9-15-1971.

Tension
Tension is the total force in pounds (Newtons) acting on the cross section and tending to cause extension of the material being processed.

NEMA Standard 9-15-1971.

Copyright National Electrical Manufacturers Association
Provided by IHS under license with NEMA
No reproduction or networking permitted without license from IHS
Not for Resale

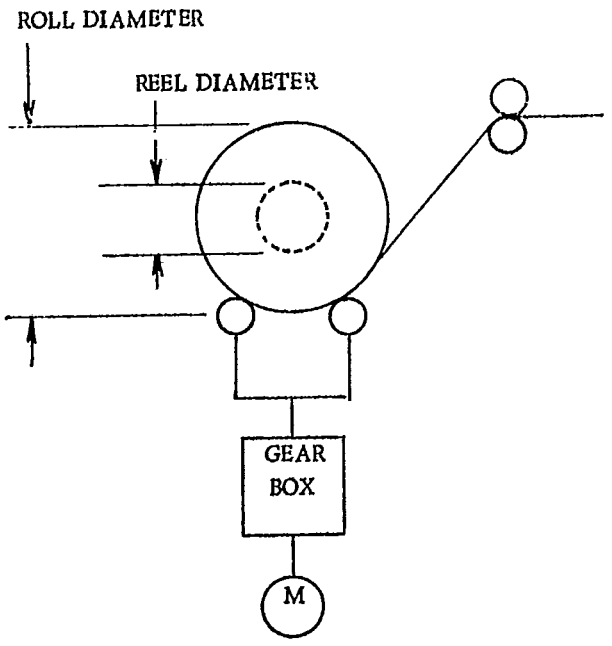

Fig. 3-106D-1
SURFACE WINDER

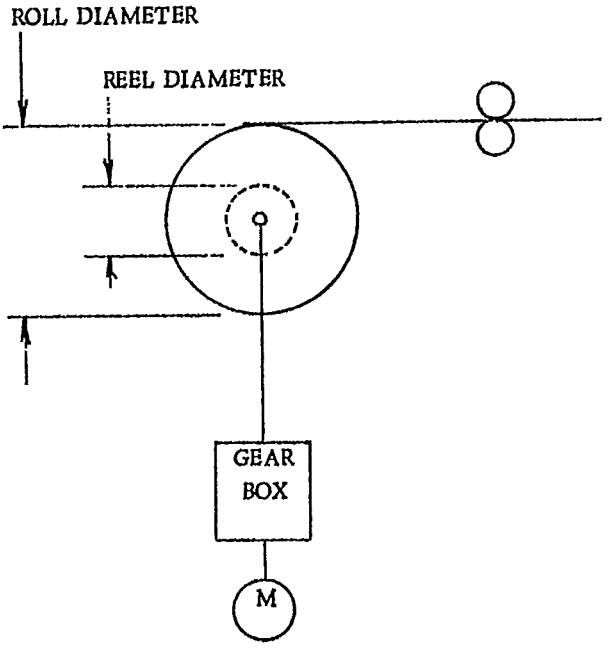

Fig. 3-106D-2
CENTER WINDER (UNWINDER)

Copyright National Electrical Manufacturers Association
Provided by IHS under license with NEMA
No reproduction or networking permitted without license from IHS
Not for Resale

APPLICATION

ICS 3-106D.80 APPLICATION INFORMATION

The following information may be required by the supplier of the electrical equipment and should be furnished by the user or machine builder to the electrical equipment supplier:

(a) *System Arrangement*—A flow diagram and physical layout, including dimensions, of mechanical features such as rolls, transducers, gearing and gear ratios, motors, looping pits or accumulators, and reels. Limiting dimensions of control panels should be included.

(b) *Line Speed and Steady-state Tension*—A table showing, for each material, line speed range, steady-state tension range and modulus of elasticity, as shown in Fig. 3-106D-3.

(c) *Operating Schedule*—Time sequence of operating schedule, including stops for inspection, splicing, reel changes, etc., to enable motor rms loading to be established.

(d) *Taper Tension*—If it is necessary or permissible to change tension as a function of build-up, a schedule indicating this relationship should be provided.

(e) *Transient Limitations*—Limitations on permissible tension and/or speed deviations during starting, stopping, acceleration and deceleration. (Factors such as breakaway friction, operation of mechanical brakes, electrical braking, windage, roll changes, splicing, and overcoming inertia may cause the operating deviation band to be exceeded.)

(f) *Driven-system Inertia*—The total inertia of each section of the driven equipment, complete with empty reel, referred to a single shaft (such as the motor shaft). The inertia of driven and idler rolls and gearing should be included.

(g) *Acceleration and Deceleration*—The required range of controlled acceleration and deceleration rates in feet (meters) per minute per second.

(h) *Driven-equipment Losses*—The total losses of the driven equipment at maximum and minimum line speed.

(i) *Low Speed Operation*—Means of threading and requirements for stalled and start-up tension. Limitations on tension variation values and the speed ranges involved should be included.

(j) *Broken Material*—Requirements for automatic shutdown when material breaks, including maximum permissible overspeed.

(k) *Emergency Stop*—Detailed requirements for emergency stops, including stopping time or stopping travel, and location and type of equipment for initiating such stops.

(l) *Steady-state Tension Deviation*—Permissible steady-state tension deviation, expressed as a percentage of maximum rated tension. (Equipment complexity increases as a product of line speed range, tension range and roll build-up ratio. It is important, therefore, to be realistic in specifying steady-state tension deviation.)

(m) *Coordination*—When the winder control is supplied separately from the rest of the process control, additional information, such as the following, is required:
(1) Signal isolation.
(2) Signal level.
(3) Grounding requirements.

(n) *Service Conditions*—Conditions under which the equipment will be required to operate. See Part ICS 1-108 of NEMA Standards Publication No. ICS 1 for usual and unusual service conditions.

(o) *Motor Data*—When the control supplier does not supply motors, the user or machine builder shall supply motor nameplate data, armature resistance, inductance and inertia, and field inductance.

Authorized Engineering Information 9-15-1971.

Product Description (Material Type, Density, Dimensions and Other Pertinent Information such as Temperature)	Tension (Pounds)(Newtons)		Line Speed (Feet/Minute) (Meters/Minute)		Modulus of Elasticity, (Pounds/Square Inch) (Newtons/Square Meter)
	Maximum	Minimum	Maximum	Minimum	

Fig. 3-106D-3

Copyright National Electrical Manufacturers Association
Provided by IHS under license with NEMA
No reproduction or networking permitted without license from IHS
Not for Resale

Part ICS 3-202

DIGITAL POSITION ENCODERS

The standards in this part apply to industrial digital position encoders of the following rotary (shaft) and linear types of encoders:

(a) Absolute Digital Position (ADP) encoders.

(b) Incremental Digital Position (IDP) encoders (includes pulse tachometers).

The definitions and standards of Part ICS 3-100 and NEMA Standards Publication No. ICS 1 apply to this part unless otherwise specified.

DEFINITIONS

ICS 3-202.01 GENERAL TERMS PERTAINING TO ABSOLUTE AND INCREMENTAL DIGITAL POSITION ENCODERS

Absolute Digital Position (ADP) Encoder

An absolute digital position encoder is a digital position encoder which produces an output signal indicative of absolute position.

NEMA Standard 5-15-1967.

Alpha-numeric Code

An alpha-numeric code is one which includes representation for alphabetic characters, numbers and other symbols.

NEMA Standard 5-21-1962.

Binary Coded Octal Code

A binary coded octal code is a code in which the natural binary values of 0 through 7 are used to represent octal digits with values from 0 to 7 within each octave.

NEMA Standard 11-21-1968.

Biquinary Code

A biquinary code is a six-bit code word comprising two codes, one-bit code followed by a five-bit code, which translates to decimal numbers.

NEMA Standard 11-21-1968.

Converter Code

A code converter is a logic system which changes coded information from one code to another.

NEMA Standard 5-21-1962.

Cyclic Decimal Code

A cyclic decimal code is a four-bit (or more) binary coded decimal code in which only one bit changes state between any two sequential code words and which translates to decimal numbers, categorized as one of a group of unit-distance codes. The sequence of digits within each bit is reversed according to a pattern such as 0, 1, 2, 3, 4, 5, 6, 7, 8, 9, 19, 18, 17 . . . 11, 10, 20, 21, 22 . . . 28, 29, 39, 38 . . . 31, 30, 40, 41 . . . 91, 90, 190, 191, etc.

NEMA Standard 7-16-1969.

Decimal Code

A decimal code is a 10-bit code in which each bit has a weighted decimal value.

NEMA Standard 11-21-1968.

Digital Position Encoder

A digital position encoder is an element which converts motion or position into digital information.

NEMA Standard 5-15-1967.

Encode

To encode is to express given information by means of a code.

NEMA Standard 5-21-1969.

Encoder

An encoder is a network or device for encoding.

Error Detection Code

An error detection code is one which includes features to facilitate the recognition of errors.

NEMA Standard 5-21-1962.

Excess-3 (Binary Coded Decimal) (XS-3) Code

An excess-3 code is a variation of an 8-121 binary coded decimal code in which the natural binary sequence of values from 3 through 12 represent the decimal numbers 0 through 9, respectively; used for convenience in forming nine's complement.

NEMA Standard 11-21-1968.

Gray (Cyclic Binary) Code

A gray code is a unit-distance code obtained by a cyclic repetition of each bit in the natural binary code.

NEMA Standard 11-21-1968.

Gray-coded Excess-3 (Binary Coded Decimal) Code

A gray-coded excess-3 code is a gray-coded version of an excess-3 binary coded decimal code which translates to decimal numbers; categorized as one of a group of cyclic decimal codes.

NEMA Standard 11-21-1968.

Incremental Digital Position (IDP) Encoder

An incremental digital position encoder is a digital position encoder which, without absolute position ref-

Copyright National Electrical Manufacturers Association
Provided by IHS under license with NEMA
No reproduction or networking permitted without license from IHS
Not for Resale

erence, produces a digital signal as a result of movement.

NEMA Standard 5-15-1967.

IR-drop Compensation of an Electric Drive

IR-drop compensation of an electric drive is a provision in the system of control by which the voltage drop (and corresponding speed drop) due to armature current and armature circuit resistance is partially or completely neutralized.

NEMA Standard 8-13-1959.

Maximum Electrical Speed

Maximum electrical speed is the maximum permissible speed of a device at which specified electrical performance is obtained.

NEMA Standard 5-15-1967.

Maximum Mechanical Speed

Maximum mechanical speed is the maximum continuous permissible speed of a device as determined by mechanical limitations.

NEMA Standard 5-15-1967.

Maximum Running Torque

Maximum running torque is the torque required to keep an encoder input shaft turning at any speed up to rated value.

NEMA Standard 11-21-1968.

Maximum Slew Speed

Maximum slew speed is the maximum intermittent permissible speed of a device as determined by mechanical limitations.

NEMA Standard 5-15-1967.

Maximum Starting Torque

Maximum starting torque is the torque required to start an encoder input shaft from rest.

NEMA Standard 11-21-1968.

Minimum Electrical Speed

Minimum electrical speed is the minimum permissible speed of a device at which specified electrical performance is obtained.

NEMA Standard 5-15-1967.

Numeric Code

A numeric code is one which uses numbers to provide information for a computer.

NEMA Standard 5-21-1962.

Quantization Uncertainty

Quantization uncertainty is the inherent uncertainty due to representation of an analog function (input position) by a digital value (quantum). Maximum uncertainty is either 1 quantum or $\pm 1/2$ quantum, depending on the zero reference. (See Fig. 3-202-1 and 3-202-2.)

NEMA Standard 11-21-1968.

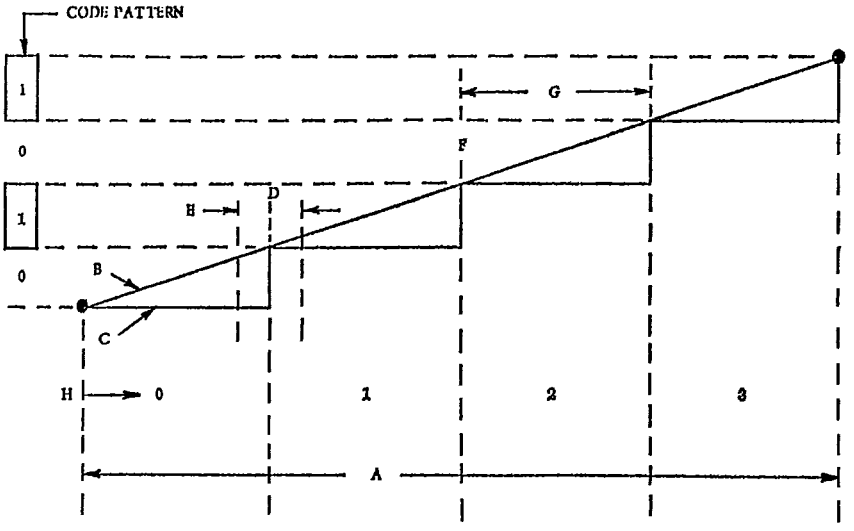

A = Range of an infinite number of analog points to be encoded.
B = Analog function.
C = Digital representation of the analog function.
D = Theoretical code transition point (transition error).
E = Deviation range of count transition (transition deviation).
F = Theoretical analog point represented by a digital 2.
G = Quantizing deviation of 1 quantum.
H = Numerical values of quanta.

Fig. 3-202-1
QUANTIZATION ZERO REFERENCE
AT CODE TRANSITION SHOWN WITH RESOLUTION OF FOUR COUNTS

Copyright National Electrical Manufacturers Association
Provided by IHS under license with NEMA
No reproduction or networking permitted without license from IHS
Not for Resale

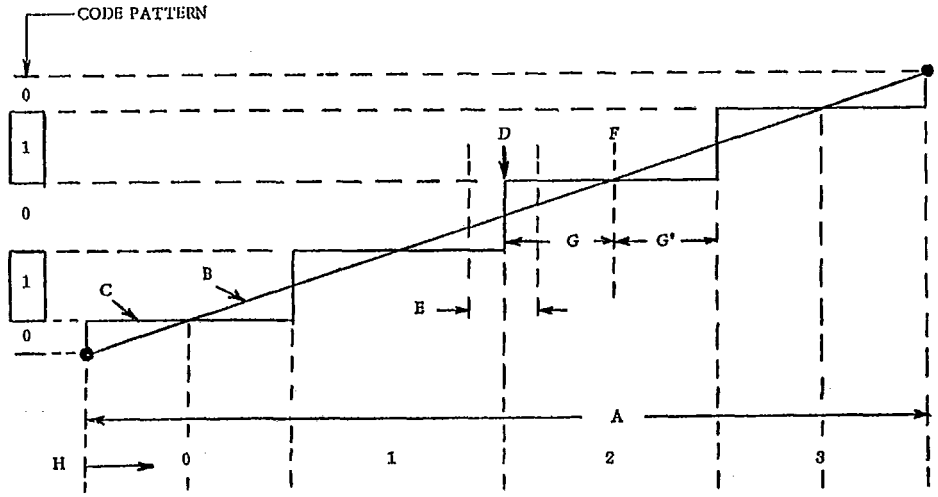

A = Range of an infinite number of analog points to be encoded.
B = Analog function.
C = Digital representation of the analog function.
D = Theoretical code transition point (transition error).
E = Deviation range of count transition (transition deviation).
F = Theoretical analog point represented by a digital 2.
G and G' = Quantizing deviations of plus and minus 1/2 quantum.
H = Numerical values of quanta.

Fig. 3-202-2
QUANTIZATION ZERO REFERENCE AT CENTER OF CODE POSITION SHOWN WITH RESOLUTION OF FOUR COUNTS

Reflected Code
A reflected code is any unit-distance code obtained by a repetitive symmetrical code sequence.
NEMA Standard 11-21-1968.

Relative Address
A relative address is a specific set of bits or characters which identifies a location in terms of its displacement from another location.
NEMA Standard 5-21-1962.

Symbolic Address
A symbolic address is an address which is stated in symbolic code.
NEMA Standard 5-21-1962.

Symbolic Code
A symbolic code is one which uses symbols which are easily understood by human operators.
NEMA Standard 5-21-1962.

Unit-distance Code
A unit-distance code is any code in which only one bit changes state between any two sequential code words in a series. The respective values of the code words in the series are prescribed by definition.
NEMA Standard 11-21-1968.

ICS 3-202.02 GENERAL TERMS PERTAINING TO ROTARY INCREMENTAL DIGITAL POSITION ENCODERS

DC Offset (50-percent Point Offset)
Direct-current offset is a value which expresses the difference between the midpoint of amplitude excursion and zero level. (See Fig. 3-202-3.)
NEMA Standard 5-15-1967.

Direction-sensing Incremental Encoder
A direction-sensing incremental encoder is an incremental digital position encoder which has an output(s) containing directional information.
NEMA Standard 5-15-1967.

Nondirection-sensing Incremental Encoder
A nondirection-sensing incremental encoder is an incremental digital position encoder which has an output which does not contain directional information.
NEMA Standard 5-15-1967.

On-off Ratio Error
On-off ratio error is the deviation from the ideal on-off ratio for a specified range of operating conditions, usually expressed in electrical degrees.
NEMA Standard 5-15-1967.

Copyright National Electrical Manufacturers Association
Provided by IHS under license with NEMA
No reproduction or networking permitted without license from IHS
Not for Resale

On-off (Time) Ratio

On-off ratio is the ratio of the period during which the waveform is above the midpoint of its amplitude excursion to the period during which it is below this value, at a specified speed.

NEMA Standard 5-15-1967.

Output Waveform

Output waveform is the graphical representation of the output during one pulse interval.

NEMA Standard 5-15-1967.

Pulse Duration*

Pulse duration is the time from a specified amplitude of the pulse rise to the same amplitude of the pulse fall. Normally either the 90- or 50-percent points are used. (See Fig. 3-202-3.)

NEMA Standard 5-15-1967.

Pulse Fall (Decay Time)*

Pulse fall is the time during which a pulse changes from 90 to 10 percent of the difference between its amplitudes, going from logic one to logic zero. (See Fig. 3-202-3.)

NEMA Standard 5-15-1967.

Pulse Interval (Pulse Period)

Pulse interval is the interval between successive transitions in the same direction of a signal through a specified amplitude. (See Fig. 3-202-3.)

NEMA Standard 5-15-1967.

Pulse Interval Jitter

Pulse interval jitter is the band within which lie all of the transitions in the same direction of a signal through a specified amplitude. This is a dynamic value to be determined at one or more specified speeds. (See Fig. 3-202-4.)

Pulse interval jitter shall be expressed as percent of one pulse interval at a specified speed.

NEMA Standard 5-15-1967.

Pulses per Revolution

Pulses per revolution is the number of pulse intervals of an output signal for each revolution of the input shaft. In a linear incremental encoder, the corresponding term is "pulses per unit distance," defined as the number of pulse intervals of an output signal for each specified unit of movement.

NEMA Standard 5-15-1967.

Pulse Rate

Pulse rate is the number of pulse intervals per unit time of an output signal at a specified speed.

NEMA Standard 5-15-1967.

Pulse Rise Time*

Pulse rise time is the time during which a pulse changes from 10 to 90 percent of the difference between its amplitudes, going from logic zero to logic one. (See Fig. 3-202-3.)

NEMA Standard 5-15-1967.

Pulse-to-adjacent-pulse Error

Pulse-to-adjacent-pulse error is the error from any one pulse to the next adjacent pulse relative to the ideal position or the ideal time interval, at a specified speed.

NEMA Standard 5-15-1967.

Pulse-to-any-other-pulse Error

Pulse-to-any-other-pulse error is the maximum error from any pulse to any other pulse relative to the ideal position or the ideal time interval, at a specified speed. It includes pulse-to-adjacent-pulse error.

NEMA Standard 5-15-1967.

Quadrature

Quadrature is a 90-degree displacement between two similar edges of two phased outputs generated by a common input.

NEMA Standard 5-15-1967.

Quadrature Deviation

Quadrature deviation is the difference between quadrature and the actual displacement, usually expressed in percent of total cycles or in electrical degrees.

NEMA Standard 5-15-1967.

Shaped Pulse

Shaped pulse is a pulse modified to create a desired result.

NEMA Standard 5-15-1967.

States in Binary Logic

See Part ICS 1-102 of NEMA Standards Publication No. ICS 1.

Symmetry Level

Symmetry level is the amplitude with respect to zero or a specified reference level at which one pulse interval of the output wave form is divided into two equal intervals. (See Fig. 3-202-5.) This may not be applicable to shaped waveforms (see Fig. 3-202-6), for which see definition of "Offset, DC (50-percent Point Offset)" in ICS 3-202.02.

NEMA Standard 5-15-1967.

Symmetry Level Deviation

Symmetry level deviation is the deviation of the symmetry level from the rated value. (See Fig. 3-202-5.)

NEMA Standard 5-15-1967.

* The actual values of pulse rise, fall and duration may or may not be a direct function of speed, depending on the kind and degree of pulse shaping included in the device.

Copyright National Electrical Manufacturers Association
Provided by IHS under license with NEMA
No reproduction or networking permitted without license from IHS
Not for Resale

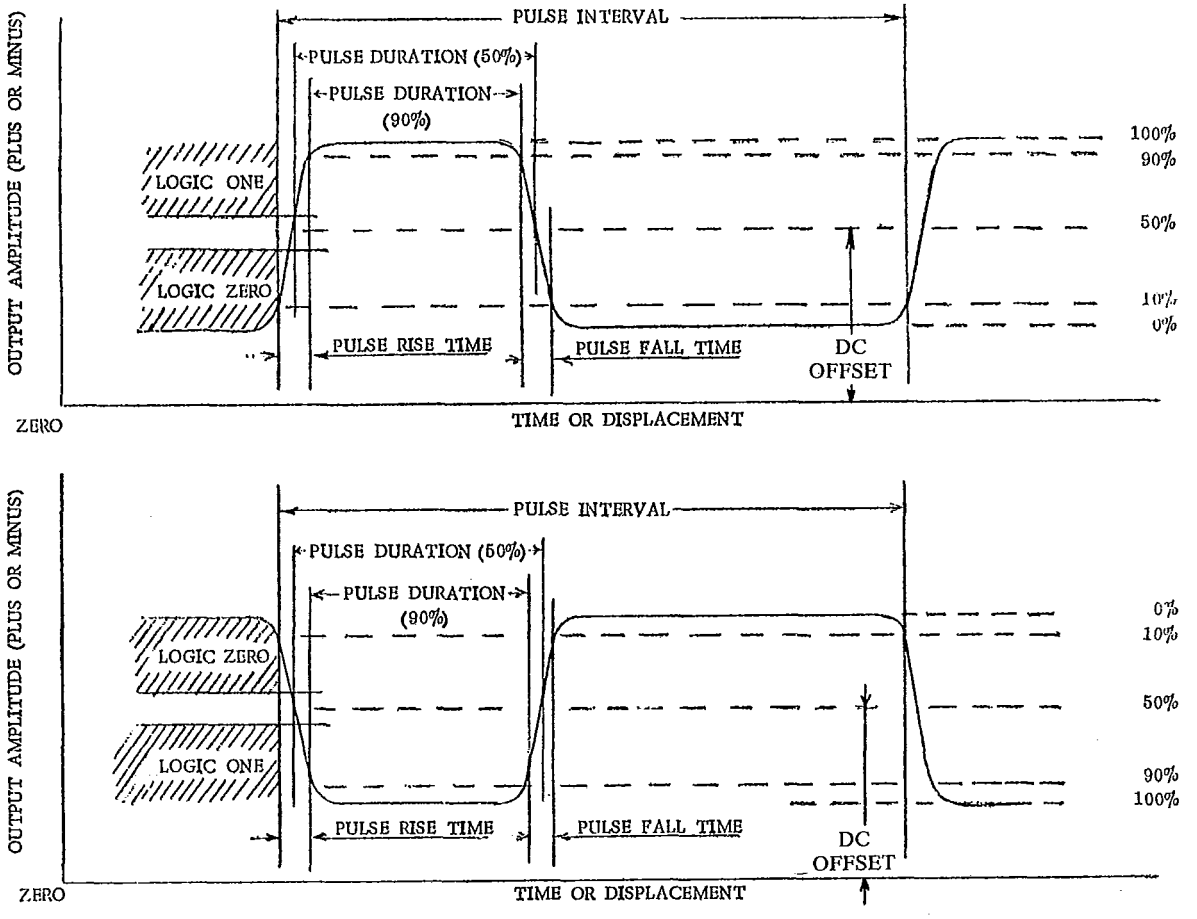

Fig. 3-202-3
ILLUSTRATION OF PULSE TERMINOLOGY (AS APPLIED TO ENCODERS)

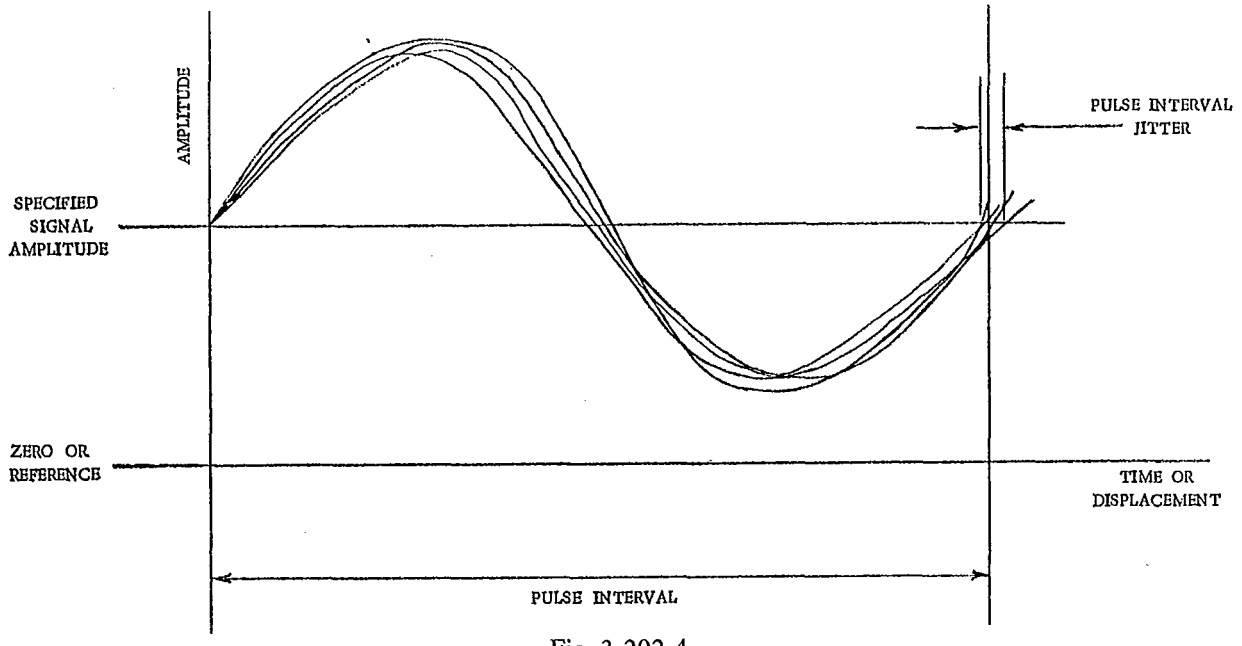

Fig. 3-202-4
ILLUSTRATION OF PULSE INTERVAL JITTER (AS APPLIED TO ENCODERS) (AS IT WOULD BE SEEN ON AN OSCILLOSCOPE USING INTERNAL TRIGGERS TO START EACH CYCLE AT THE SAME SPECIFIED SIGNAL AMPLITUDE)

Copyright National Electrical Manufacturers Association
Provided by IHS under license with NEMA
No reproduction or networking permitted without license from IHS
Not for Resale
PROBLEM HARD COPY

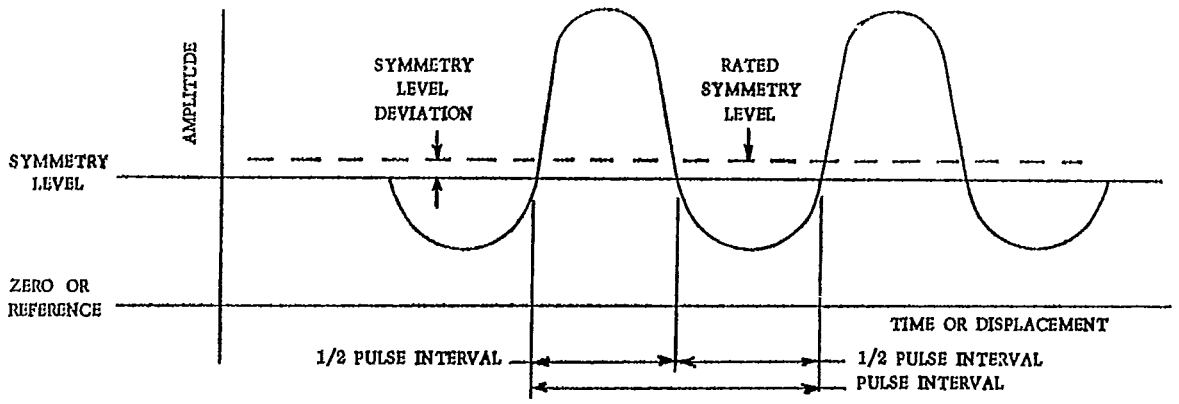

Fig. 3-202-5
ILLUSTRATION OF SYMMETRY LEVEL AND SYMMETRY LEVEL DEVIATION (AS APPLIED TO ENCODERS)

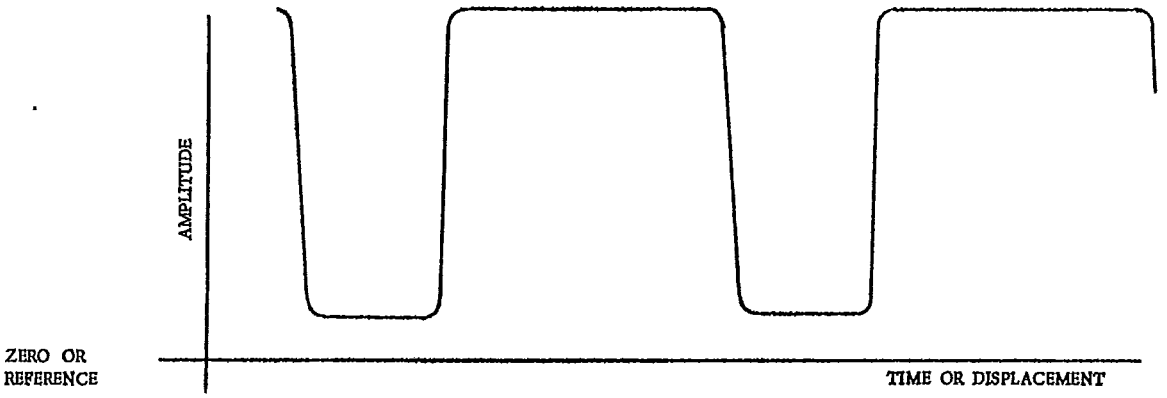

Fig. 3-202-6
TYPICAL WAVEFORM WHERE SYMMETRY LEVEL IS NOT APPLICABLE (AS APPLIED TO ENCODERS)

Copyright National Electrical Manufacturers Association
Provided by IHS under license with NEMA
No reproduction or networking permitted without license from IHS
Not for Resale

ICS 3-202.03 GENERAL TERMS PERTAINING TO ROTARY ABSOLUTE DIGITAL POSITION ENCODERS

Accuracy

Accuracy is the maximum positional difference between the encoder's input shaft true position and the position indicated by the encoder output. This difference includes:

(a) Deviations from theoretical code transition positions and

(b) Quantizing uncertainties which result from converting from a scale having an infinite number of points to a digital representation containing a finite number of points. (See "Resolution.")

NEMA Standard 11-21-1968.

Ambiguity

Ambiguity is the inherent error caused by multiple bit changes at code transition positions. (This can be eliminated by various scanning techniques. See "Scan.")

NEMA Standard 7-16-1969.

Bit Width

Bit width is the angular increment of input position defined by either the true (1) or false (0) value of a bit. For example, the bit width of the least significant digit of a gray code comprises two quanta or, in a binary code, one quantum.

NEMA Standard 11-21-1968.

Code

A code is a uniquely arranged group of binary bits which identifies an encoder input position.

NEMA Standard 11-21-1968.

Input Shaft Angle

Input shaft angle is the discrete position of the input shaft as measured from a zero reference.

NEMA Standard 11-21-1968.

Interrogation

(a) *Pulse*—Pulse interrogation is the periodic synchronous or asynchronous electrical observance of an encoder's position indication.

(b) *Continuous*—Continuous interrogation is the constant electrical observance of an encoder's position indication.

NEMA Standard 11-21-1968.

Parallel Data

Parallel data is the simultaneous availability of information on more than one channel.

NEMA Standard 11-21-1968.

Percent Resolution

Percent resolution is the quantum width divided by the range of motion quantized, multiplied by 100.

NEMA Standard 11-21-1968.

Read (To Read Out)

To read is to obtain or transfer data.

NEMA Standard 7-16-1969.

Read Command

See "Interrogation."

Readout (See "Interrogation" and "Scan")

Readout is the method of handling encoder-generated (output) data. This term must always be qualified by another term, such as "visual," "scan," "electrical," etc.

NEMA Standard 11-21-1968.

Repeatability

Repeatability is the degree of correspondence between successive readings of the same transition when measured in the same manner. It is expressed as plus or minus deviations.

NEMA Standard 11-21-1968.

Resolution

Resolution is the range of motion per quantum; sometimes expressed as quanta per revolution of input shaft or quanta per total encoder count range.

NEMA Standard 11-21-1968.

Scan

Scan is a logical readout method which eliminates data ambiguity.

(a) *Block V-scan*—Block V-scan is a combination of U-scan and V-scan required for BCD codes other than unit-distance codes for avoidance of ambiguity. U-scanned binary code words are V-scanned in blocks of four bits each or less.

(b) *U-scan*—U-scan is an encoder interrogation method in which one of two sets of sensors—a set of lagging sensors and a set of leading sensors (two sensors per bit)—are selected and read out in parallel. The set of sensors read out are selected by the state of a selector bit. The term "U-scan" is derived from the geometric position of the sensors which resemble a U.

(c) *V-scan*—V-scan is an encoder interrogation method in which one of two sensors per bit is selected to be read out by the state of the next lower order binary bit. Interrogation is serial in effect. The term "V-scan" is derived from the geometric placement of the sensors which resemble a V.

NEMA Standard 11-21-1968.

Self-decode

Self-decode is a term used to indicate that all or a part of the scanning is done internal to the encoder.

NEMA Standard 11-21-1968.

Serial Data

Serial data is the sequential availability of information on one output channel.

NEMA Standard 11-21-1968.

Serial Readout

See "Serial Data" and "Readout."

Copyright National Electrical Manufacturers Association
Provided by IHS under license with NEMA
No reproduction or networking permitted without license from IHS

Not for Resale

Total Count

Total count is the count capacity (range) of an absolute encoder at the limit of useful travel. Useful travel is usually expressed as maximum degrees of rotation or units of linear travel. (The travel of rotary encoders is usually not mechanically limited.)

NEMA Standard 7-16-1969.

Transition Deviation

Transition deviation is the difference between the theoretical encoder position reading and the actual encoder position reading. (See Fig. 3-202-1 and 3-202-2.)

NEMA Standard 11-21-1968.

GENERAL INFORMATION AND FEATURES

ICS 3-202.05 SERVICE CONDITIONS

Encoders shall be capable of delivering rated performance continuously under the usual service conditions specified in Part ICS 1-108 of NEMA Standards Publication No. ICS 1. For unusual service conditions, see Part ICS 1-108 of NEMA Standards Publication No. ICS 1.

NEMA Standard 7-13-1967.

Because of environmental conditions under which they are very likely to be used, encoders shall be capable of operating at an environmental temperature of 60°C. This temperature does not take into account or allow for mounting the encoders on a heat source such as flange mounting on a hot machine.

Suggested Standard for Future Design 7-13-1967.

ICS 3-202.06 SUPPLY VOLTAGE AND FREQUENCY

The alternating-current supply, when required, shall be single phase, 115 volts, either 50 or 60 hertz.

NEMA Standard 7-13-1967.

ICS 3-202.07 CLASSIFICATION ACCORDING TO MECHANICAL AND ENVIRONMENTAL PROTECTION

Encoders shall be nonventilated, shall be so designed as to protect internal parts against specified environments, and shall be classified accordingly. However, conformance with this standard shall not require protection against condensation or icing which occurs within the enclosure or results from the entrance of moisture via the conduit or unsealed openings.

.01 Type A—General-purpose Protection

This is designed to protect against fibres, lint, nonhazardous dust and mechanical damage. The electrical terminations may be exposed. Exterior surfaces, exclusive of shafts, shall be rust resistant.

.02 Type B—Industrial Protection

This is designed to protect the encoder, including terminations, against fibres, lint, nonhazardous dust and light splashing, dripping or external condensation of noncorrosive liquids, and also against mechanical damage. Such encoders are dripproof* and splashproof.† Exterior surfaces, exclusive of shafts, larger than 1/4 inch in diameter shall be rust resistant.

.03 Type C—Industrial Watertight Protection

This is designed to protect against severe external condensation or seepage of liquids or hose-directed water. Such encoders are watertight,* oiltight and rust resistant and shall have provision for oiltight and watertight terminations.

* See Part ICS 6-100 of NEMA Standards Publication No. ICS 6.
† Splashproof means so constructed and protected that external splashing will not interfere with successful operation.

NEMA Standard 7-13-1967.

ICS 3-202.08 INFORMATION TO BE FURNISHED BY MANUFACTURER FOR ABSOLUTE AND INCREMENTAL DIGITAL ENCODERS

The following information, if applicable to the device, shall be furnished by the manufacturer:

.01 Electrical

Power input (volts, current, regulation, ripple)
Power consumption
Output over rated speed range
- Volts as a function of load resistance
- Volts, rated
- Current, rated
- Minimum external load resistance
- Polarity
- Number of outputs and their relationship and electrical isolation
- Pulses per revolution
- Waveshape, graphical
- Rise time at specified load impedance, including tolerance
- Fall time at specified load impedance, including tolerance

Direction-sensing or nondirection-sensing
Maximum and minimum pulse intervals per second

Copyright National Electrical Manufacturers Association
Provided by IHS under license with NEMA
No reproduction or networking permitted without license from IHS Not for Resale

.02 Mechanical
Size (dimensions and tolerances)
Mounting (dimensions, tolerances and type: foot, flange, face, servo)
Construction (dusttight, etc.)
Torque (starting and running)
Weight
Maximum mechanical speed, rpm
Direction of rotation
Terminations (type and identification)

.03 Environmental
Temperature

NEMA Standard 7-13-1967.

Vibration
Shock, G's

Authorized Engineering Information 7-13-1967.

In addition to the foregoing, it will be found that certain devices or applications will require some or all of the following information:

.04 Electrical
Pulse interval jitter
Pulse-to-adjacent-pulse error
Pulse-to-any-other-pulse error
Nominal on-off ratio
On-off ratio error
Noise immunity
Quadrature deviation
Direct-current offset (volts), including tolerance
Symmetry level (volts) at on-off ratio of one, including tolerance

.05 Mechanical
Moment of inertia
Coupling recommendation
Bearings
Materials (case)
Shaft acceleration, revolutions per second per second
Maximum shaft loading, radial at specified location, and axial (pounds)
Maximum slew speed

Authorized Engineering Information 7-13-1967.

ICS 3-202.09 INFORMATION TO BE FURNISHED BY MANUFACTURER FOR ABSOLUTE DIGITAL POSITION ENCODERS

The following information, if applicable to the device, shall be furnished by manufacturer:

.01 Electrical
Power input
Rated voltage and percent tolerance
Maximum current
Maximum ripple
Maximum voltage to case
Rated output

	Voltage and Polarity		Maximum Current	Nominal Encoder Impedance
	Min	Max		
Logical 1				
Logical 0				

Output characteristics
Total count
Counts per revolution of input shaft
Code
Number of outputs and their relationship and electrical isolation
Resolution
Accuracy (including reversal)
Waveshape, graphical
Rise time at specified load impedance
Fall time at specified load impedance
Interrogation requirements

.02 Mechanical
Moment of inertia (oz-in.^{2})
Maximum starting torque (oz-in.) at 20°C
Coupling recommendations
Shaft size
Bearings
Materials (case and shaft)
Maximum shaft acceleration (rev/sec/sec)
Maximum shaft loading, radial load at specified distance or moment, and axial load
Shaft runout
Shaft perpendicularity
Shaft concentricity
Maximum slew speed
Maximum operating speed
Size (dimensions and tolerances)
Mounting (dimensions, tolerances, and type: foot, flange, face, servo)
Weight
Direction of rotation for ascending count, as viewed from shaft end
Terminations (type and identification)

.03 Environmental
Vibration
Shock, G's
Temperature (operating +10° to +60°C, storage −10° to +75°C)
Electromagnetic interference (EMI)
Fungus resistance
Humidity

NEMA Standard 7-16-1969.

Copyright National Electrical Manufacturers Association
Provided by IHS under license with NEMA
No reproduction or networking permitted without license from IHS
Not for Resale

MANUFACTURING

ICS 3-202.60 NAMEPLATE MARKING

Encoders shall bear the following minimum amount of information:

(a) Manufacturer's name.
(b) Model number.
(c) Manufacturer's serial number or date code.

NEMA Standard 7-16-1969.

APPLICATION

ICS 3-202.80 APPLICATION INFORMATION

The following are some of the important factors which should be considered by the user in the application of digital position encoders:

(a) The method of coupling the encoder to the machine whose motion is being detected is a vital consideration because of possible errors or stresses which can be introduced.
  (1) Care must be taken that the rated shaft loading, both radial and axial, not be exceeded. Common causes of difficulty are end thrust, misalignment, and belt or gear thrust.
  (2) Backlash or modulation in the coupling can cause serious errors of position indication.
(b) The moment of inertia of the encoder, including the coupling, as well as starting and running torque, may affect the dynamics of the system to which the encoder is coupled.
(c) Exceeding the maximum mechanical speed, taking into account shaft loading [see par. (a)], may cause permanent damage to the encoder. Exceeding the maximum electrical speed may result in incorrect data.
(d) Noise in the input power supply or output of an encoder may cause application problems. Some of the common means of minimizing such noise are grounding, twisted pairs, shielding, and isolation of leads.
(e) Consideration should be given to the ability of the output to handle resistive and capacitive loads. Long leads on the output have an associated capacitance which can degenerate high-frequency signals.
(f) Other factors to be considered are:
  (1) Type, location and accessibility of terminations.
  (2) Mounting dimensions and type of mounting, such as face, servo-type, foot, flange.
  (3) Suitability of the enclosure.

Authorized Engineering Information 7-13-1967.

Copyright National Electrical Manufacturers Association
Provided by IHS under license with NEMA
No reproduction or networking permitted without license from IHS
Not for Resale

Part ICS 3-302

GENERAL-PURPOSE ADJUSTABLE-VOLTAGE PACKAGED-DRIVE SYSTEMS (WHERE DC ARMATURE POWER IS OBTAINED FROM AC LINES USING CONTROLLED SEMICONDUCTOR RECTIFIERS)

The standards in this part apply to general-purpose adjustable-voltage integral-horsepower packaged-drive systems using shunt- or compound-wound direct-current motors where the primary power source is alternating current and the conversion to direct current is by controlled semiconductor rectifiers. The definitions and standards of Part ICS 3-100 and NEMA Standards Publication No. ICS 1 apply to this part unless otherwise specified.

GENERAL INFORMATION AND FEATURES

ICS 3-302.05 PACKAGED-DRIVE SYSTEM

For the purpose of Part ICS 3-302, a packaged-drive system is one which includes a motor or motors and the power conversion and control equipment, the power conversion and principal control equipment being contained in a single enclosure, and which provides adjustable speed by control of the armature voltage or a combination of armature and motor shunt field control.

NEMA Standard 11-16-1967.

ICS 3-302.06 USUAL AND UNUSUAL SERVICE CONDITIONS

Equipment conforming with these standards shall be capable of operating continuously at its rating under the usual service conditions specified in Part ICS 1-108 of NEMA Standards Publication No. ICS 1.

For drives capable of regeneration, the supplier should be consulted concerning the effects of momentary reductions in supply voltage below this range. (This sentence has been approved as Authorized Engineering Information.)

Unusual service conditions are given in Part ICS 1-108 of NEMA Standards Publication No. ICS 1.

NEMA Standard 11-16-1967.

ICS 3-302.07 TYPES OF SYSTEMS

Systems shall be of one of the following types:

Type I—Adjustable speed is provided only by adjustment of the armature voltage.

Type II—Adjustable speed is provided by a combination of armature voltage and motor shunt field current adjustment.

NEMA Standard 11-16-1967.

ICS 3-302.08 FEATURES

Certain features may be required for particular applications and, if so, should be specified by the user. Among such features are:

(a) Reversing.
(b) Jogging speed adjustment, independently set.
(c) Dynamic slowdown.
(d) Dynamic braking.
(e) Manual motor field adjustment.
(f) Field loss protection.
(g) Adjustable current limit.
(h) Timed acceleration.
(i) Timed deceleration.
(j) Armature circuit isolation from alternating-current power supply.
(k) Regeneration.

Authorized Engineering Information 11-16-1967.

RATINGS

ICS 3-302.20 OUTPUT RATINGS

.01 Horsepower

(a) *Single-phase Primary Power Source*—1, 1-1/2, 2, 3, 5 and 7-1/2 horsepower.
(b) *Three-phase Primary Power Source*—5, 7-1/2, 10, 15, 20, 25, 30, 40, 50, 60, 75, 100, 125, 150 and 200 horsepower.*

* The steps of horsepower rating beyond those shown shall be in accordance with NEMA Publication No. MG 1.

.02 Speed

If the speed rating of the system differs from that of the motor, it shall be specified.

NEMA Standard 11-16-1967.

In selecting the power supply capacity for the motor, it is necessary to recognize that motors of the same horsepower rating with different enclosures and speeds may have different current ratings.

Authorized Engineering Information 11-16-1967.

ICS 3-302.21 AC INPUT RATINGS

Input ratings shall be 230, 460 and 575 volts, 60 hertz.

NEMA Standard 11-16-1967.

Copyright National Electrical Manufacturers Association
Provided by IHS under license with NEMA
No reproduction or networking permitted without license from IHS
Not for Resale

ICS 3-302.22 DC VOLTAGE RATINGS

Alternating-current Supply Phases	Motor Armature Voltage Rating, Volts	Motor Field Voltage Rating, Volts
1	180	100 or 200
3	240	150 or 240
3	500	240 or 300
3	550*	240 or 300

* Alternate rating.

The direct-current motor shall be insulated for the alternating-current voltage applied to the input of the rectifier.

Suggested Standard for Future Design 11-16-1967.

ICS 3-302.23 SERVICE FACTOR

The service factor for the system shall be 1.0.

NEMA Standard 11-16-1967.

DESIGN TESTS AND PERFORMANCE

ICS 3-302.40 SPEED RANGE

The speed shall be capable of being adjusted over a range of not less than 8 to 1 by armature voltage control.

NEMA Standard 11-16-1967.

This speed range may be extended by motor field weakening to a maximum speed depending on the motor rating.

Authorized Engineering Information 11-16-1967.

ICS 3-302.41 OPERATION BELOW BASE SPEED

Drives are capable of operation at any speed within the rated speed range. When drives are operated continuously at rated torque at speeds below the rated base speed, the temperature rise of the motor may exceed the rated full-load value. To meet the specified duty cycle and torque requirements of the load for a given application, the drive system design must assure adequate torque capability at reduced speeds with a safe motor temperature rise.

Authorized Engineering Information 11-16-1967.

ICS 3-302.42 STEADY-STATE PERFORMANCE

Steady-state performance shall be specified in accordance with the methods given in Parts ICS 3-106A and 3-106B.

Suggested Standard for Future Design 11-16-1967.

ICS 3-302.43 OVERLOAD CAPACITY

Following continuous operation at rated load, drives shall be capable of carrying 150 percent of rated load for 1 minute, followed by a period of light load operation of such duration that the rms load does not exceed rated continuous current without exceeding the temperature rise limitations of Part ICS 1-109 of NEMA Standards Publication No. ICS 1.

NEMA Standard 11-16-1967.

MANUFACTURING

ICS 3-302.60 DC DRIVE MOTOR POWER CIRCUIT PROTECTION

A circuit breaker or electromechanical contactor shall be provided between the direct-current motor and the alternating-current lines to physically disconnect the motor.

Motor running overcurrent protection utilizing an inverse-time trip characteristic shall be provided to protect the motor against excessive current due to operating overloads. In addition, instantaneous overcurrent protection shall be provided for packaged drives of 60 horsepower and more.

NEMA Standard 11-16-1967.

ICS 3-302.61 ACCELERATION CONTROL

Drives shall be provided with either current-limit or timed acceleration.

NEMA Standard 11-16-1967.

ICS 3-302.62 DYNAMIC BRAKING

When dynamic braking is provided, the drive system shall be capable of braking a load (whose inertia equals that of the motor) at an initial current of 150 percent of rated armature current from full speed to standstill three times in rapid succession, with the dynamic-braking resistor initially at ambient temperature.

NEMA Standard 11-16-1967.

ICS 3-302.63 DYNAMIC SLOWDOWN

When dynamic slowdown is provided, the resistors used for this purpose shall be capable of absorbing four times the stored energy of the motor at full speed, with the dynamic-braking resistor initially at ambient temperature.

NEMA Standard 11-16-1967.

ICS 3-302.64 DC MOTOR FIELD CONTROL

When field control of the motor could cause detrimental generated voltage and/or current in the armature circuit, means shall be provided to automatically prevent such a possibility.

NEMA Standard 11-16-1967.

Copyright National Electrical Manufacturers Association
Provided by IHS under license with NEMA
No reproduction or networking permitted without license from IHS
Not for Resale

Part ICS 3-303

GENERAL-PURPOSE ADJUSTABLE-FREQUENCY DRIVE SYSTEMS USING SEMICONDUCTOR POWER CONVERSION

The standards in this part apply to general-purpose adjustable-frequency drive systems in which the speed of alternating-current synchronous or induction motors is adjusted by controlling the frequency. It applies to systems where the primary power source is direct current or fixed frequency alternating current and the conversion to adjustable frequency is achieved by controlled semiconductors in Forms FB and FC (see ICS 3-104.08). The definitions and standards of Part ICS 3-100 and NEMA Standards Publication No. ICS 1 apply to this part unless otherwise specified.

GENERAL INFORMATION AND FEATURES

ICS 3-303.05 ADJUSTABLE-FREQUENCY DRIVE SYSTEM

For the purpose of Part ICS 3-303, an adjustable-frequency drive system is one which includes a motor or motors and the power conversion and control equipment.

NEMA Standard 7-19-1972.

ICS 3-303.06 SERVICE CONDITIONS

Equipment conforming with these standards shall be capable of operating continuously at its rating under the usual service conditions specified in Part ICS 1-108 of NEMA Standards Publication No. ICS 1, except that rated performance may not be achieved if the supply voltage falls more than 5 percent below the rated nameplate value.

Unusual service conditions are given in Part ICS 1-108 of NEMA Standards Publication No. ICS 1.

NEMA Standard 7-19-1972.

ICS 3-303.07 MODES OF OPERATION

Adjustable-frequency drives are designed to have a constant-torque speed range and may also have a constant-horsepower speed range.

Authorized Engineering Information 7-19-1972.

ICS 3-303.08 FEATURES

Certain features may be required for particular applications and, if so, should be specified by the user. Among such features are:

(a) Motor reversing (phase sequence reversal)
  (1) By power circuit switching.
  (2) By inverter control logic.
(b) Jogging.
(c) Timed acceleration.
(d) Timed deceleration.
(e) Dynamic braking slowdown.
(f) Dynamic braking stop.
(g) Current limit.
(h) Regeneration.
(i) Extended speed (frequency) range.
(j) Overspeed protection.

Authorized Engineering Information 7-19-1972.

RATINGS

ICS 3-303.20 INPUT POWER VOLTAGE RATINGS

.01 Form FC (See Part ICS 3-104)

(a) *Alternating Current, 60 Hertz*—200, 230, 460 and 575 volts.
(b) *Alternating Current, 50 Hertz*—220, 380, 415 and 500 volts.

.02 Form FB (See Part ICS 3-104)

(a) *Direct Current*—240, 300 and 600 volts.

NEMA Standard 7-19-1972.

ICS 3-303.21 INVERTER OUTPUT RATINGS

Ratings for voltage, frequency and number of phases of inverter output are not included in these standards because the standards apply to complete drive systems These standards are based on the use of polyphase motors, three-phase being the most commonly used.

Authorized Engineering Information 7-19-1972.

ICS 3-303.22 OUTPUT RATINGS

.01 Horsepower Ratings

Adjustable-frequency drive systems shall be rated in terms of the horsepower output of the motor. These ratings shall be 1, 1-1/2, 2, 3, 5, 7-1/2, 10, 15, 20, 25, 30, 40, 50, 60, 75, 100, 125, 150 or 200 horsepower at base-speed frequency and voltage.

NEMA Standard 7-19-1972.

The power conversion and control equipment for a multimotor drive are not necessarily the same as those for a single-motor drive of the same horsepower rating, and the drive system supplier should be consulted.

Copyright National Electrical Manufacturers Association
Provided by IHS under license with NEMA
No reproduction or networking permitted without license from IHS
Not for Resale

In selecting the power-supply capacity for the motor, the current ratings of such motors as high-speed motors, totally-enclosed fan-cooled motors, short-time-rated motors, etc., should be considered.

Authorized Engineering Information 7-19-1972.

.02 Speed Ratings

Adjustable-frequency drives shall have a "base-speed" rating, this being the lowest speed at which the drive can develop rated horsepower continuously.

Drives which provide for operation above base speed by increasing the frequency shall have a maximum speed rating and a corresponding horsepower rating.

NEMA Standard 7-19-1972.

ICS 3-303.23 SERVICE FACTOR

The service factor for the system shall be 1.0.

NEMA Standard 7-19-1972.

DESIGN TESTS AND PERFORMANCE

ICS 3-303.40 STEADY-STATE PERFORMANCE

Steady-state performance shall be specified in accordance with the methods given in Parts ICS 3-106A and 3-106B.

NEMA Standard 7-19-1972.

ICS 3-303.41 OPERATING SPEED RANGE

The operating range over which the drive is capable of maintaining its specified steady-state performance shall be specified.

The continuous torque capacity of the drive at the minimum speed for this operating range shall be specified.

NEMA Standard 7-19-1972.

ICS 3-303.42 OVERLOAD CAPACITY

Following continuous operation at rated torque, drives shall be capable of carrying 150 percent of rated torque at base speed for 1 minute, followed by a period of light load operation of such duration that the rms torque does not exceed rated continuous torque without exceeding the temperature rise limitations of Part ICS 1-109 of NEMA Standards Publication No. 1.

The maximum load capacity at the minimum speed of the range specified in ICS 3-303.41 shall be specified and shall be not less than 100 percent of rated torque.

For drives with a contant-horsepower speed range, the maximum load capacity at the maximum speed shall also be specified.

NEMA Standard 7-19-1972.

ICS 3-303.43 STARTING CHARACTERISTICS

The starting capability of the system shall be specified, indicating at least the minimum torque available between rest and minimum speed. Breakaway torque shall be defined, at starting applied frequency, as the minimum torque developed by the motor at rest for any initial angular position of the rotor and shall be stated in percent of rated torque.

Unless otherwise specified, when synchronous motors are provided the system shall be capable of synchronizing against a torque at least equal to the rated torque with a specified load inertia at the minimum operating frequency.

NEMA Standard 7-19-1972.

The purchaser should provide information on the load-starting torque requirements and the load inertia.

Authorized Engineering Information 7-19-1972.

MANUFACTURING

ICS 3-303.60 PROTECTION

(a) Undervoltage protection shall be provided.

(b) Motor running overcurrent protection shall be provided to protect each motor against excessive current due to operating overloads.

(c) Except for applications in which the operator does not have access to the driven machine, the manually operated stop command of the controller or a separate on and off switch shall provide a positive means of blocking rotational power to the motor.

NEMA Standard 7-19-1972.

The intent of par. (c) is to minimize hazards to personnel from an unexpected motion of the motor or driven equipment due to malfunction of a control element or power semiconductor.

Authorized Engineering Information 7-19-1972.

Copyright National Electrical Manufacturers Association
Provided by IHS under license with NEMA
No reproduction or networking permitted without license from IHS
Not for Resale

ICS 3-303.61 ACCELERATION CONTROL

Drives shall be provided with either torque limit or timed acceleration, unless an externally applied reference signal is used and is sloped so as to limit the acceleration rate to a value that is compatible with the drive system.

NEMA Standard 7-19-1972.

ICS 3-303.62 DYNAMIC BRAKING SLOWDOWN

When dynamic braking slowdown is provided, the resistors used for this purpose shall be capable of absorbing 6 times the stored energy of the motor at maximum speed, with the resistors initially at ambient temperature.

NEMA Standard 7-19-1972.

For duty cycles involving repeated operation or high inertia, it may be necessary to specify higher energy storage capacity.

Authorized Engineering Information 7-19-1972.

ICS 3-303.63 DYNAMIC BRAKING STOP

When dynamic braking stop is provided, the drive system shall be capable of braking a load at an initial torque of 150 percent of rated torque at base speed, and the resistor shall be capable of absorbing 6 times the stored energy of the motor at maximum speed, with the dynamic braking resistor initially at ambient temperature.

NEMA Standard 7-19-1972.

Dynamic braking is considered to apply only to the use of a resistor across the direct-current line of an adjustable-frequency drive using an inverter. This requires maintained control of the inverter. It is not necessarily the only or best method for emergency stopping.

The energy absorption capability of the resistor is not necessarily greater than that for a direct-current drive (see ICS 3-302.62) because the inertia of an alternating-current motor is typically less than that of a comparable direct-current motor.

Authorized Engineering Information 7-19-1972.

ICS 3-303.64 SYSTEM INFORMATION

The following information shall be supplied by the manufacturer:

.01 Controller Nameplate

(a) *Input*:
- (1) Voltage.
- (2) Frequency.
- (3) Number of phases.
- (4) Current.

(b) *Output*:
- (1) Rated voltage.
- (2) Rated current.
- (3) Rated kVA.
- (4) Rated frequency.
- (5) Frequency range.
- (6) Number of phases.
- (7) Power factor range.

.02 Motor Nameplate

- (a) Manufacturer's type and frame designation.
- (b) Base speed.
- (c) Maximum speed if different from base speed.
- (d) Horsepower at base speed.
- (e) Frequency at base speed.
- (f) Voltage at base speed.
- (g) Full-load current at base speed.
- (h) Maximum continuous current if different from full-load current at base speed.
- (i) Number of phases.
- (j) Time rating.
- (k) Insulation system designation.*
- (l) Maximum ambient temperature.*

* These two items may be replaced by temperature rise.

.03 Instruction Manual or Nameplates

- (a) Minimum speed.
- (b) Horsepower at minimum and maximum speeds.
- (c) Frequency at minimum and maximum speeds.
- (d) Voltage at minimum and maximum speeds.

NEMA Standard 7-19-1972.

Copyright National Electrical Manufacturers Association
Provided by IHS under license with NEMA
No reproduction or networking permitted without license from IHS
Not for Resale

Part ICS 3-304

PROGRAMMABLE CONTROLLERS

Part ICS 3-304 provides information concerning the construction, programming, performance, test, installation, protection and safety of programmable controllers. The definitions and standards of Part ICS 3-100 and NEMA Standards Publication No. ICS 1 apply to this part unless otherwise specified.

DEFINITIONS

ICS 3-304.01 DEFINITIONS

Baud (For Binary Code Transmission)
A measure of the speed at which information is transmitted, expressed in bits per second.
NEMA Standard 1-28-1976.

Sink Mode Output
A solid-state output, operating in a current sink mode, controls the current from the load, i.e., when the output is energized it connects the load to the negative polarity of the supply.

Source Mode Output
A solid-state output, operating in a current source mode, controls the current to the load, i.e., when the output is energized it connects the load to the positive polarity of the supply.

Hardware
The physical, tangible and permanent components of a programmable controller.
NEMA Standard 1-28-1976.

Instruction
A statement that specifies an operation and the values or locations of its operands.
NEMA Standard 1-28-1976.

Programmable Controller
A digitally operating electronic apparatus which uses a programmable memory for the internal storage of instructions for implementing specific functions such as logic, sequencing, timing, counting and arithmetic to control, through digital or analog input/output modules, various types of machines or processes. A digital computer which is used to perform the functions of a programmable controller is considered to be within this scope. Excluded are drum and similar mechanical-type sequencing controllers.
NEMA Standard 1-28-1976.

Software
(a) Operating, utility, assembly and other computer programs which are furnished with a programmable controller.
(b) Documents, such as manuals, drawings, program listings and operating instructions.
NEMA Standard 1-28-1976.

GENERAL INFORMATION AND FEATURES

ICS 3-304.05 FUNCTIONAL CHARACTERISTICS

.01 Programmable Controller Characteristics
The operation of a programmable controller is based on a multiplexed system which consists of inputs, outputs, memory and a processor with associated buses, namely, the input/output (I/O) bus and the memory bus.

.02 Processor Characteristics
The processor examines the status of inputs and outputs and, in turn, controls outputs. The status of a group of inputs, which may be combined with the status of outputs, controlling one output will be termed a "logic combination." Numerous logic combinations are usually required to carry out the control plan. All such logic combinations are evaluated in a predetermined order on a periodic basis. Each complete set of logic evaluations is termed a "scan."

.03 Programming Characteristics
The following characteristics describe one manner in which a programmable controller may be programmed to execute or carry out the instructions of a control plan. Other techniques may be used.
(a) *Programming Language Characteristics*—The user's desired arrangement of input to output relationships is conveyed to the programmable controller by means of instructions which may take one of the following forms:
(1) Ladder diagrams and symbols relating normally open contacts —| |— , normally closed contacts —|/|— , and outputs —O—.
(2) A Boolean statement relating the status of elements with the logic "and" (*), "or" (+), and "invert" (/) functions to a single output. Usually the statement takes the form of a string of elements relating to a single output, such as [(A*B) + (C*D) */E] = F.

Copyright National Electrical Manufacturers Association
Provided by IHS under license with NEMA
No reproduction or networking permitted without license from IHS
Not for Resale

(3) A code or language with operators such as AND, OR, STO(re), OUT, etc., used in conjunction with input and output addresses.

(b) *Characteristics of Programming Tools*—A program may be transferred into or out of the memory of the programmable controller by means of one or more of the following loaders:

(1) A manual loader is a device which accepts a program via a keyboard or selector switch and pushbutton arrangements and loads the instructions of the program into the controller memory. The manual loader may be external to the controller and is usually not required for the operation of the controller once the memory is "loaded." In some cases, the controller memory must be extracted from the controller and connected to the manual loader. Displays are generally provided to allow the memory contents to be read.

(2) A graphic display loader is a device which allows the operator to construct a picture of the logic combination on a display by entering symbols from a keyboard or switch arrangement, and then to load the information into the controller memory. Generally this device allows the operator to work with ladder diagrams.

(3) A paper tape loader is a device which inserts a program into (or extracts a program from) the controller memory by means of a paper tape.

(4) A magnetic tape loader is a device which inserts a program into (or extracts a program from) the controller memory by means of a magnetic tape.

(5) A remote loader is a device either attached to or incorporated into a programmable controller, allowing a program to be entered into the programmable controller from an originating location some distance away. Any of the above loading means may be utilized in conjunction with the originating point and the controller would be through a telephone network using a telephone data set. (Also, see ICS 3-304.05.07 Communication Characteristics and ICS 3-304.23 Communication Interfaces.)

(c) *Multibit Data Operation Characteristics*—Some programmable controllers allow for the manipulation of more than one bit (one contact or output) at a time. Usually four or more contacts which represent binary coded decimal (BCD) information can be operated upon arithmetically as well as logically. Correspondingly, groups of four bit outputs can be accommodated in the BCD format.

.04 Memory Characteristics

The following characteristics define the manner in which programmed instructions are held in the programmable controller.

(a) *Read-only Memory (ROM)*—Read only memories are designed to store, permanently, a fixed program which is not alterable under ordinary circumstances. Basically, they are not susceptible to changes due to electrical noise or power conditions.

Examples of nonalterable ROM's are: (1) mask-programmed devices in which the manufacturer of the memory deposits the semiconductor materials in the fixed pattern desired, and (2) fusible link memories in which programming voltages permanently alter the memory device.

Under some circumstances, certain types of ROM's may be altered or reprogrammed. Examples are: (1) braided wire memories in which the physical placement or replacement of wires determine the memory pattern, and (2) erasable ROM's in which ultraviolet light is used to dissipate stored internal charges, thus returning the ROM to an unprogrammed state.

(b) *Read-write Memories*—Sometimes referred to as random-access memories (RAM's), these devices are designed to be written into as easily as information can be read from them.

If the memory device loses its information when power is removed (such as a semiconductor RAM), it is referred to as a "volatile" RAM. If it retains its memory while power is off, it is referred to as "nonvolatile," (e.g., magnetic core and plated-wire memories).

(c) *Memory Capacity*—The length of a program normally depends on the complexity of the user's requirement. Most programmable controller memories are expandable in fixed increments to accommodate the user's needs. Memory utilization rules to allow the user to estimate his needs are generally supplied by the manufacturers of controllers.

.05 Input/Output (I/O) Characteristics

Input devices accept signals from the machine or process elements and translate them into signals which can be used within the controller. Output devices convert controller signals into external signals used to control the machine or process. Typically, the input and output interface devices are associated with some means of terminating field wiring, providing indication, signal isolation, and perhaps fusing. I/O devices can be characterized as being of the following types:

Copyright National Electrical Manufacturers Association
Provided by IHS under license with NEMA
No reproduction or networking permitted without license from IHS

Not for Resale

Inputs	Outputs
AC input	AC output
DC input	DC output
Pulse input	Pulse output
Analog input	Analog output
Specific-purpose input	Specific-purpose output
	Indicator output

.06 Specific Function Characteristics

In addition to straight logic processing, the controller may perform other general functions, such as timing, counting, latching, arithmetic, and retentive storage operations, as well as specific-purpose functions such as stepping switch and shift register.

These functions may be implemented by hardware which may be part of the controller or by software programs utilized within the controller. Examples are as follows:

(a) Timer functions (internal or external; programmable or nonprogrammable).
(b) Counter functions (internal or external; programmable or nonprogrammable; count up or count up/count down).
(c) Latch functions (internal or external; programmable or nonprogrammable).
(d) Stepping switch and shift register functions (internal or external; programmable or nonprogrammable).
(e) Arithmetic functions.
(f) Data-moving functions.

.07 Communication Characteristics

A programmable controller may be interfaced to computers or other programmable controllers which can monitor and/or direct its operations.

Authorized Engineering Information 5-15-1978.

ICS 3-304.06 SERVICE AND INSTALLATION CONDITIONS

.01 Unusual Service and Installation Conditions

The usual service and installation conditions described in Part ICS 1-108 of NEMA Standards Publication No. ICS 1 shall apply to programmable controllers except that:

(a) A programmable controller shall be capable of operating in an ambient air temperature, adjacent to the controller, of 55°C without exceeding its specified temperature limits.*

(b) A programmable controller shall be capable of operating in ambient air, adjacent to the controller, having a relative humidity of from 5 to 95 percent, noncondensing.

Programmable controllers shall be Altitude Class 2 kM unless otherwise specified.

.02 Unusual Service Conditions

Service conditions which are designated as "unusual" in Part ICS 1-108 of NEMA Standards Publication No. ICS 1 should be called to the manufacturer's attention since unusual construction or protection may be required.

Authorized Engineering Information 1-28-1976.

ICS 3-304.07 LOGIC DIAGRAMS AND SYMBOLS

.01 Graphical Symbols

If graphical symbols are used, they shall be as follows:

Normally open logic contact	] [
Normally closed logic contact	]/[or]\[
Logic coil	( )
Non-logic function	[ ]

.02 Mnemonic Symbols for Functions/Operations

If mnemonic symbols are used for functions or operations, they shall be as follows:

Latch	L or LC
Unlatch	U or ULC
Time Delay After Energization	TE or TON
Time Delay After Deenergization	TD or TOF

.03 Line Elements

Line elements of ladder diagrams shall be as follows:

! Vertical line (not mandatory at right)
– Horizontal line
\+ Branch

NEMA Standard 1-10-1978.

.04 Sample Diagram

Fig. 3-304-1 is a sample logic diagram illustrating the use of graphical symbols, mnemonic symbols and line elements.

Authorized Engineering Information 1-10-1978.

ICS 3-304.08 PROGRAMMING

Since programming hardware and methods vary in accordance with the design of programmable controls, programming instructions should be supplied by the manufacturer.

Authorized Engineering Information 1-28-1976.

* The ambient air temperature of 55°C allows for a 40°C room ambient in accordance with Part ICS 1-108 of NEMA Standards Publication No. ICS 1 plus a 15°C rise within an enclosure. (This sentence is approved as Authorized Engineering Information.)

NEMA Standard 1-28-1976.

Copyright National Electrical Manufacturers Association
Provided by IHS under license with NEMA
No reproduction or networking permitted without license from IHS
Not for Resale

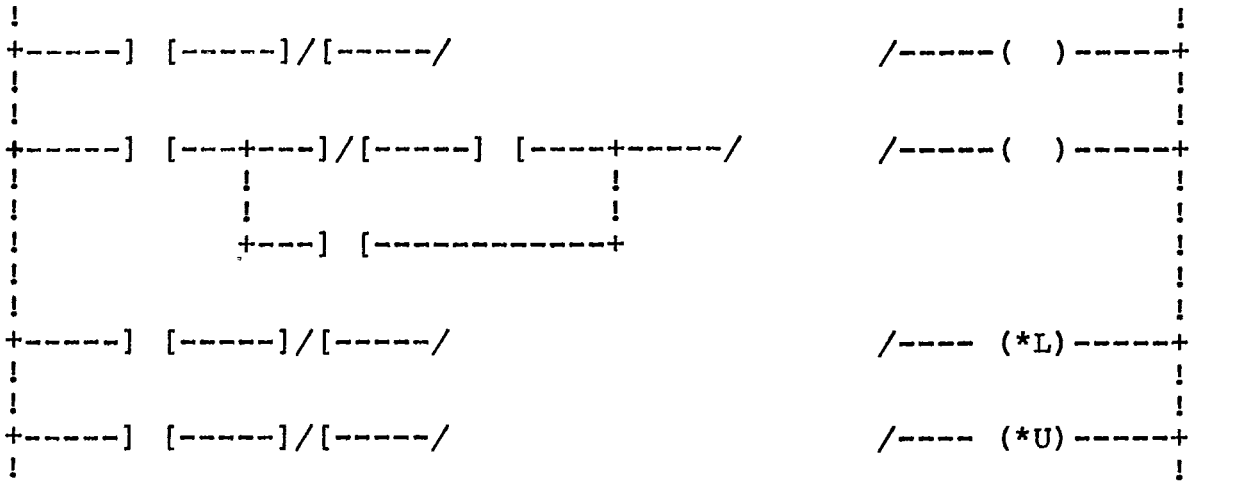

* Location of mnemonic portion of symbol is optional. Number of spaces between symbols is optional. Total length of rung is optional, including folding. Asterisk is not part of the symbol.

Fig. 3-304-1
SAMPLE LOGIC DIAGRAM

RATINGS

ICS 3-304.20 POWER SOURCE VOLTAGES

The ratings for the power source for programmable controllers shall be as shown in Table 3-304-1.

Table 3-304-1
POWER SOURCE RATINGS

Alternating Current	Direct Current
120 volts/60 Hz 220 volts/50Hz Single Phase	24 volts

NEMA Standard 1-28-1976.

ICS 3-304.21 DIGITAL INPUTS AND OUTPUTS

.01 Digital Inputs

a. Nominal input signal voltages for programmable controllers shall be as shown in Table 3-304-2.

Table 3-304-2
NOMINAL INPUT SIGNAL VOLTAGES

Alternating Current, Volts rms at 60 Hertz	Direct Current Volts
240	250
120	125
48	105
24	48
12	24
...	15
...	12
	5

b. Nominal input currents at the nominal input signal voltages given in Table 3-304-2 shall be specified by the manufacturer.

c. Must turn on and must turn off current and voltage levels corresponding to the nominal signal voltage in Table 3-304-2 shall be specified by the manufacturer as information for such applications as proximity switches and other devices with high leakage current and/or voltage drops.

.02 Digital Outputs

Output current ratings shall be as listed in Tables 3-304-3 and 3-304-4. These ratings apply under the following conditions:

1. Continuous rated output current at 55 °C ambient.
2. Maximum surge current at 55 °C ambient after reaching thermal equilibrium at the rated module output.
3. Minimum load current applied over the temperature range 0 to 55 °C.
4. Maximum leakage current applies over the temperature range 0 to 55 °C.

NEMA Standard 3-6-1985.

ICS 3-304.22 ANALOG INPUTS AND OUTPUTS

This standard is under development.

ICS 3-304.23 COMMUNICATION INTERFACES

When serial communication interfaces are provided, they shall be in accordance with the EIA Publication No. RS-232-C *Standard Interface Between Data Equipment and Data Communication Equipment Employing Serial Binary Data Interchange.*

Copyright National Electrical Manufacturers Association
Provided by IHS under license with NEMA
No reproduction or networking permitted without license from IHS
Not for Resale

Table 3-304-3
RATINGS FOR ALTERNATING-CURRENT, 60 HERTZ, SOLID-STATE OUTPUTS

Continuous Rated Output Current Amperes, Rms	Maximum Surge Current, Two Cycles 60 Hz Amperes, Rms	Minimum Load Current Amperes, Rms	Maximum Leakage Current, mA Rms	
			At 12 thru 120 V	At 240 V
5	50	0.2	10	*
2	20	0.2	10	*
1	10	0.1	5	*
0.5	5	0.05	5	*
0.25	2.5	0.025	2.5	*
0.1	1.0	0.01	2.5	*

Maximum on-state voltage drop at continuous rated output current shall be specified by the manufacturer.
*Under consideration.

Table 3-304-4
RATINGS FOR DIRECT CURRENT SOLID-STATE OUTPUTS, SOURCE OR SINK MODE

Continuous Rated Output Current Amperes	Maximum Forward Voltage Drop, VDC	Maximum Leakage Current, mA			
		Logic Circuits 5-18 VDC	Power Circuits		
			12-48 VDC	49-125 VDC	126-250 VDC
*	*	*			
2.0	2.5	...	3.0	3.0	3.0
1.0	2.5	...	2.0	2.0	3.0
.5	2.5	...	2.0	2.0	3.0
.25	2.0	...	1.0	2.0	3.0
0.1	2.0	...	0.4	0.8	2.0

*The manufacturer shall specify which logic family or families (TTL, CMOS, etc.) are compatible with his logic circuit outputs.

The following transmission speeds, expressed in baud, shall be used for communication:

110	1200	4800
300	1800	9600
600	2400	19200

Procedures for the use of communication control characters shall be in accordance with American National Standard No. X3.28, *Procedures for the Use of the Communication Control Characters of American National Standard Code for Information Interchange in Specified Data Communication Links.*

NEMA Standard 1-28-1976.

DESIGN TESTS AND PERFORMANCE

ICS 3-304.40 VOLTAGE LIMITS

A programmable controller shall be capable of operating in each of its intended modes without malfunction when energized for:

(a) 6 Hours at rated frequency and 110 percent of rated voltage.

(b) 6 Hours at rated frequency and 90 percent of rated voltage.

NEMA Standard 1-28-1976.

ICS 3-304.41 VOLTAGE DIPS AND RECOVERY

(a) When a programmable controller is subjected to supply voltage dips of sufficient magnitude and duration to interfere with its functioning, all signal and power outputs shall go to their predetermined states with no false momentary signals and no loss of nonvolatile memory.

(b) When the supply voltage returns to normal, the following conditions shall prevail:

(1) Nonvolatile memory shall be intact.

Copyright National Electrical Manufacturers Association
Provided by IHS under license with NEMA
No reproduction or networking permitted without license from IHS
Not for Resale

(2) Nonretentive elements shall be reset.

(3) Retentive elements shall remain in the same state as when voltage was lost.

(4) Outputs shall resume their intended operation with no false momentary signals.

NEMA Standard 1-28-1976.

ICS 3-304.42 ELECTRICAL NOISE TOLERANCE

A programmable controller shall be capable of performing its intended function when, subject to the conditions set forth in Part ICS 2-230 of NEMA Standards Publication No. ICS 2 and the manufacturer's installation recommendations, its external input, output and power supply wiring is subjected to the noise test described in Part ICS 2-230 of NEMA Standards Publication No. ICS 2 with the programmable controller substituted for the "logic system enclosure" described.

Suggested Standard for Future Design 5-16-1977.

Figures 3-304-2, 3-304-3, and 3-304-4 show test setups which closely resemble the one described and shown in Part ICS 2-230 of NEMA Standards Publication No. ICS 2. The basic difference is that, in each case, the logic system is replaced by a programmable control system which is programmed to duplicate the logic system functionally. Also, Figures 3-304-2, 3-304-3, and 3-304-4 indicate the connections required for testing the input circuit, the output circuit and the power supply, respectively.

Six tests are required, Cases I and II for each of the input, output and power supply. Case I requires the ladder diagram shown in Figure 3-304-5; in this test, a check is made for the relay ICR picking up falsely. Case II requires the ladder diagram shown in Fig. 3-304-6; in this test, a check is made for the relay ICR dropping out falsely (IR must be forced on momentarily, by picking the reset button, to initiate the test).

The above test is a minimum test. It may be convenient on some programmable controllers to repeat the ladder diagram at various locations throughout the controller's memory. However, this additional testing is not a requirement of this standard.

Authorized Engineering Information 5-16-1977.

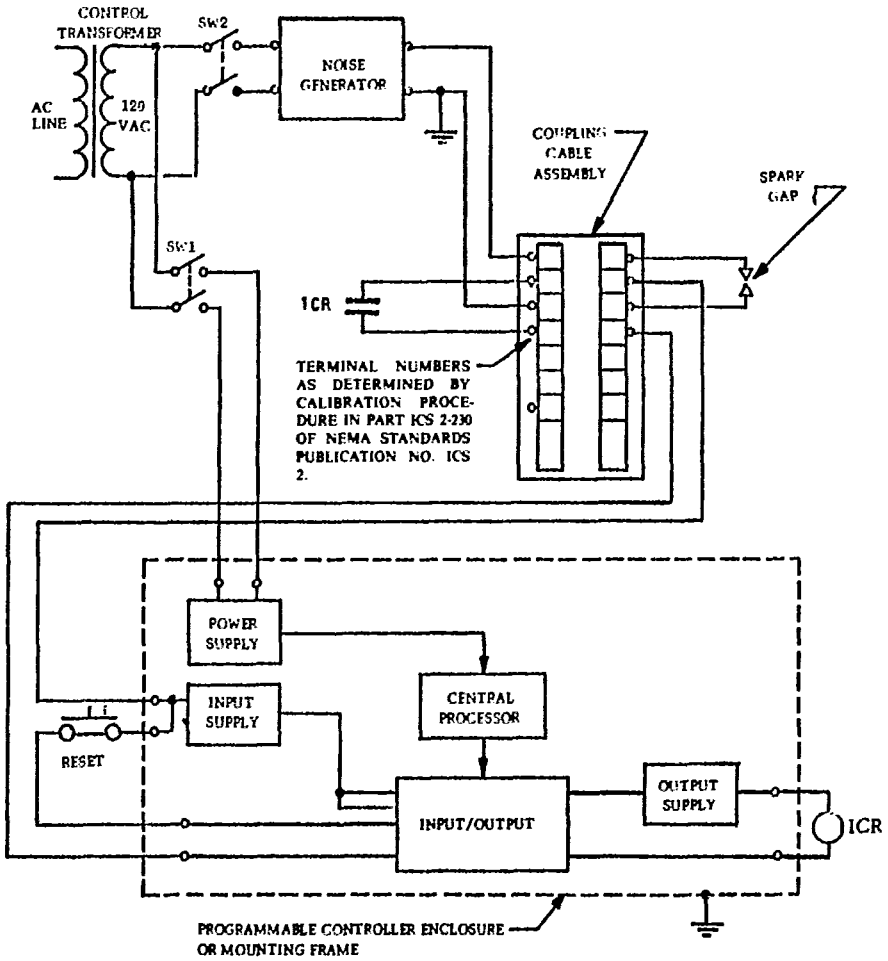

Figure 3-304-2
CONNECTION DIAGRAM FOR NOISE TEST OF INPUT CIRCUIT

Copyright National Electrical Manufacturers Association
Provided by IHS under license with NEMA
No reproduction or networking permitted without license from IHS
Not for Resale

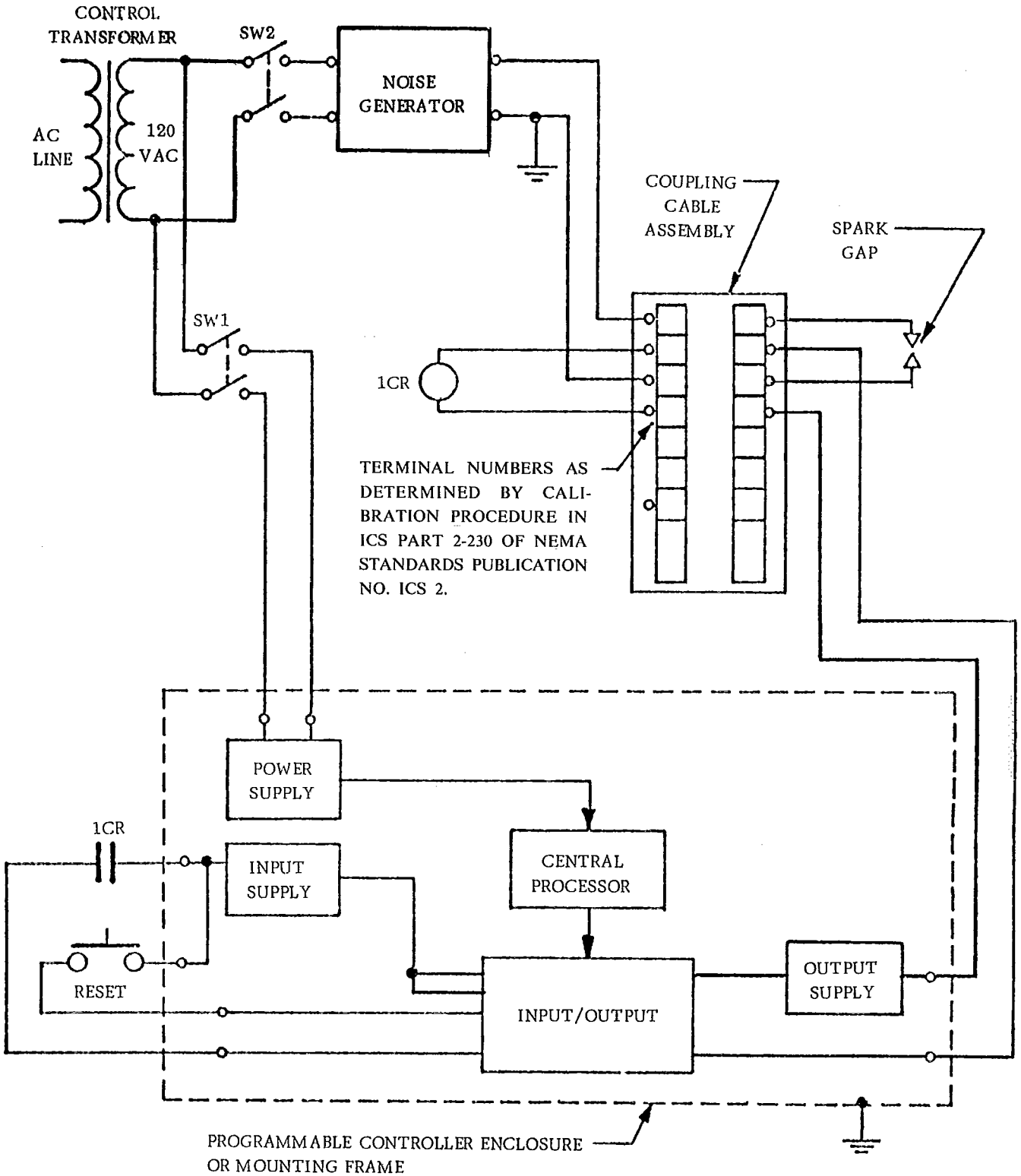

Figure 3-304-3
CONNECTION DIAGRAM FOR NOISE TEST OF OUTPUT CIRCUIT

Copyright National Electrical Manufacturers Association
Provided by IHS under license with NEMA
No reproduction or networking permitted without license from IHS
Not for Resale

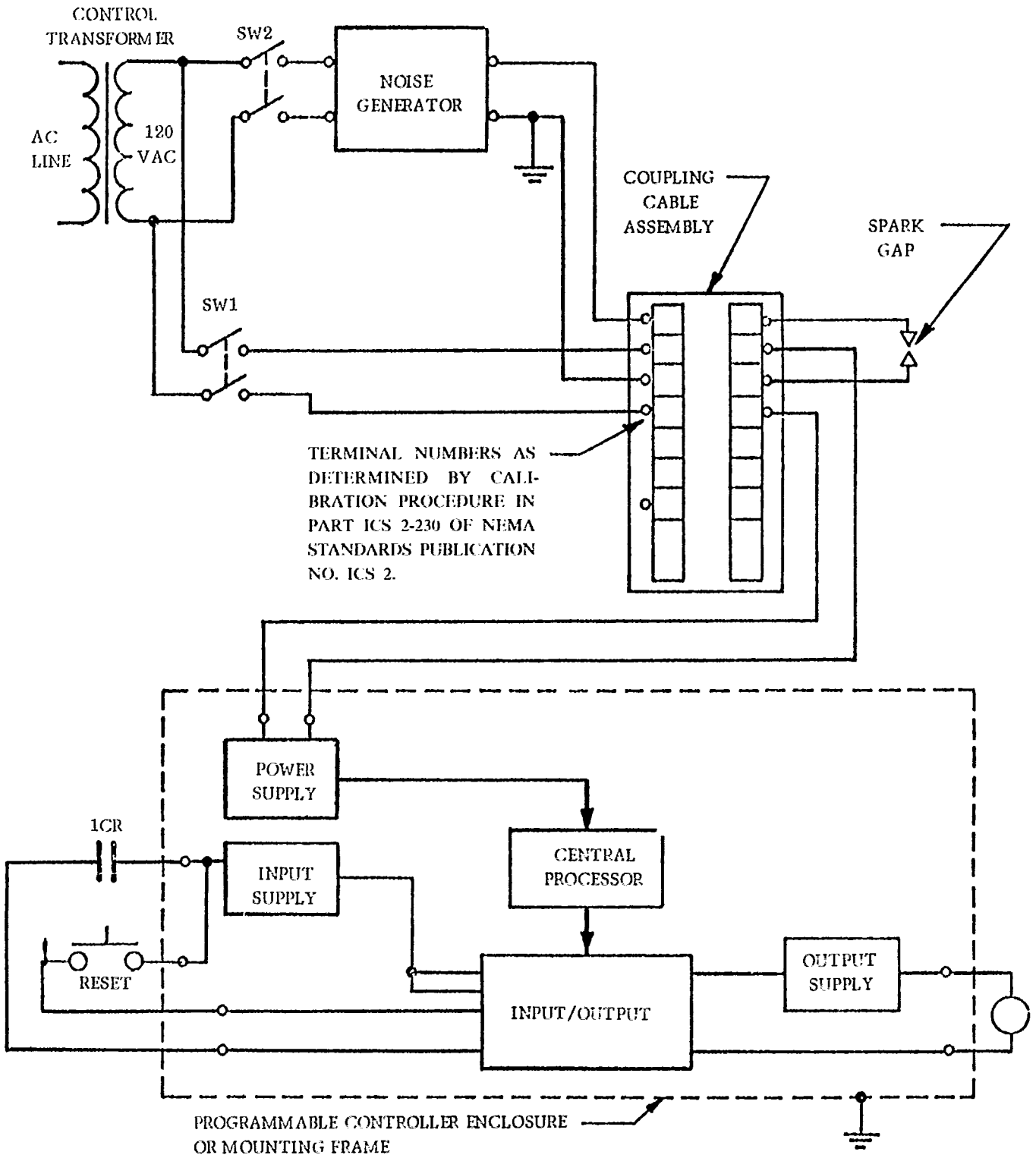

Figure 3-304-4
CONNECTION DIAGRAM FOR NOISE TEST OF POWER SUPPLY CIRCUIT

Copyright National Electrical Manufacturers Association
Provided by IHS under license with NEMA
No reproduction or networking permitted without license from IHS
Not for Resale

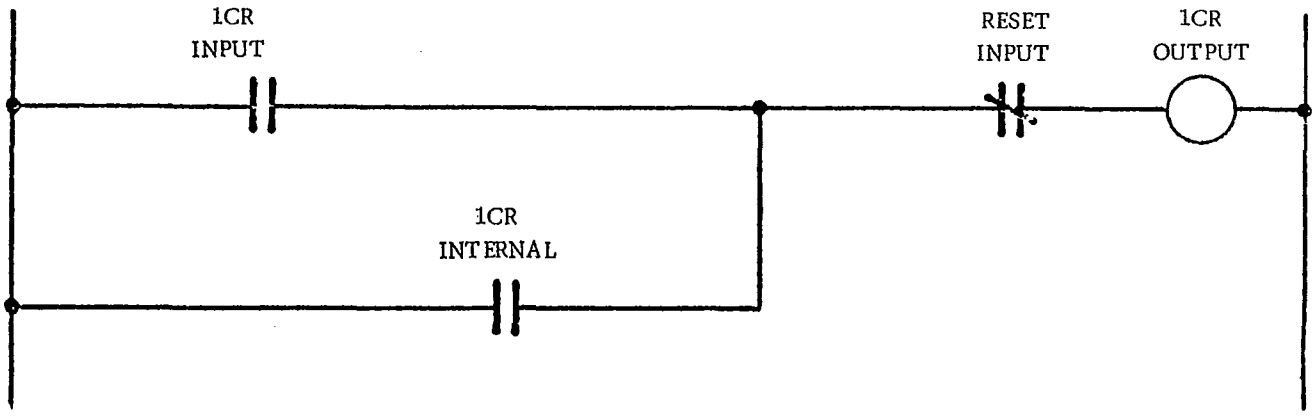

Fig. 3-304-5
LADDER DIAGRAM FOR CASE I TEST

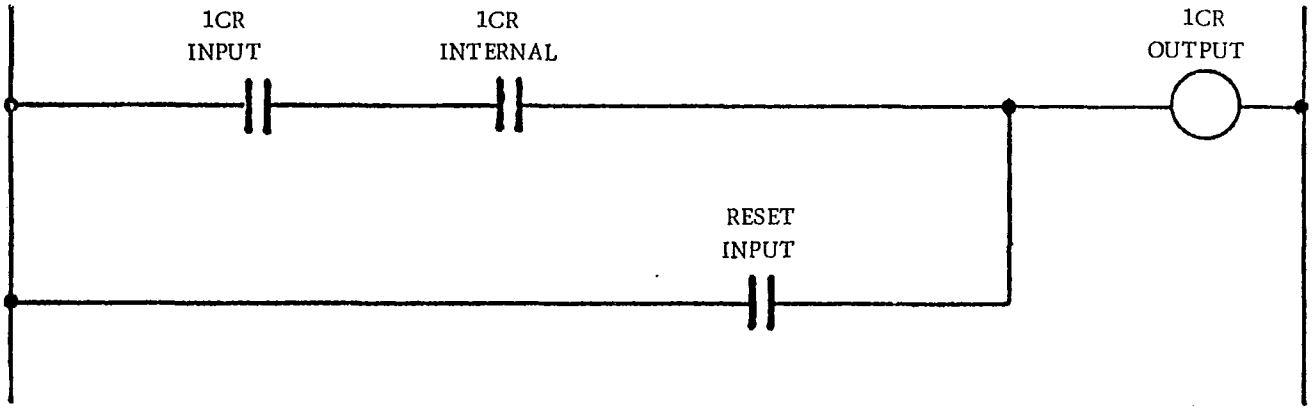

Fig. 3-304-6
LADDER DIAGRAM FOR CASE II TEST

ICS 3-304.43 TEMPERATURE

(a) The continuous temperature ratings of components shall not be exceeded when a programmable controller is tested in accordance with Part ICS 1-109 of NEMA Standards Publication No. ICS 1 at the ambient temperature specified in Part ICS 3-304.

(b) After it reaches thermal equilibrium at the ambient temperature specified in Part ICS 3-304, a programmable controller shall be capable of operating in its intended manner when subjected to the manufacturer's recommended exercise program for 3 hours.

NEMA Standard 1-28-1976.

ICS 3-304.44 DIELECTRIC TEST

A programmable controller shall be capable of meeting the requirements of ICS 1-109.21, Power Frequency Dielectric Testing Procedures of NEMA Standards Publication No. ICS 1.

NEMA Standard 5-15-1978.

Copyright National Electrical Manufacturers Association
Provided by IHS under license with NEMA
No reproduction or networking permitted without license from IHS
Not for Resale

MANUFACTURING

ICS 3-304.60 ELECTRICAL

(a) Electrical spacings shall be in accordance with Part ICS 1-111 of NEMA Standards Publication No. ICS 1.
(b) Printed wiring assemblies shall be in accordance with Part ICS 1-113 of NEMA Standards Publication No. ICS 1.
(c) When power supply buses are grounded, power shall be supplied through an isolating transformer.
(d) Field wiring terminals shall be in accordance with the NEMA Standards Publication No. ICS 4.

NEMA Standard 1-28-1976.

ICS 3-304.61 MECHANICAL

(a) Plug-in printed wiring assemblies shall be marked or keyed to assist in their correct insertion.
(b) Plugs and receptacles shall be marked or keyed to avoid incorrect mating.
(c) Cable clamps which grip the jacket shall be used to secure cables to connectors.
(d) External plugs and receptacles shall have means to prevent accidental disconnection.
(e) Metal parts shall be inherently corrosion resistant or finished to resist corrosion in ordinary industrial plant environments.
(f) Programmable controllers, as supplied by the manufacturer, are commonly intended for installation in an outer enclosure. Such enclosures shall be suited for the environment in which they will be installed and shall be in accordance with NEMA Standards Publication No. ICS 6.

NEMA Standard 1-28-1976.

APPLICATION

ICS 3-304.80 INSTALLATION RECOMMENDATIONS

Proper installation of a programmable controller is of the utmost importance to its satisfactory operation. When installing a programmable controller, therefore, extreme care should be exercised in following the manufacturer's instructions and in meeting the applicable requirements of the *National Electrical Code*.

Authorized Engineering Information 1-28-1976.

ICS 3-304.81 SAFETY RECOMMENDATIONS

Consideration should be given to the use of an emergency stop function which is independent of the programmable controller.

Where the operator is exposed to the machinery, such as in loading or unloading a machine tool, or where the machine cycles automatically, consideration should be given to the use of an electromechanical override or other redundant means, independent of the programmable controller, for starting and interrupting the cycle.

If provision for changing programs while the equipment is in operation is required, consideration should be given to the use of locks or other means of assuring that such changes can be made only by authorized personnel.

These recommendations are intended as safeguards against the failure of critical components and the effects of such failures or the inadvertent errors that may be introduced if programs are changed while the equipment is in operation.

Authorized Engineering Information 1-10-1978.

Copyright National Electrical Manufacturers Association
Provided by IHS under license with NEMA
No reproduction or networking permitted without license from IHS
Not for Resale

Part ICS 3-441

DC MAGNETIC CONTROLLERS FOR METAL MILLS

The standards in this part apply to direct-current magnetic controllers for metal mills, such as main drives for rolling mills, mill auxiliaries and mill accessory machines. The definitions and standards of Part ICS 3-100 and NEMA Standards Publication No. ICS 1 apply to this part unless otherwise specified.

GENERAL INFORMATION AND FEATURES

ICS 3-441.05 TYPES OF MAGNETIC CONTROLLERS (SEE ICS 3-441)

(a) *Controllers for Main Drives for Rolling Mills*
(b) *Controllers for Mill Auxiliaries*—These controllers are for machines which are used directly in the processing of materials, such as screwdowns and manipulators but not cranes. (See Parts ICS 3-442 and 3-443.)
(c) *Controllers for Mill Accessory Machines*—These controllers are for machines which are not used directly in the processing of materials, such as pumps, machine tools, etc.

NEMA Standard 9-20-1973.

General-purpose controllers are suitable for mill accessory machines (see Part ICS 2-331 of NEMA Standards Publication No. ICS 2).

Authorized Engineering Information 9-20-1973.

ICS 3-441.06 COMMON FEATURES OF OPEN MILL CONTROLLERS

All classes of open mill controllers have the following features:

(a) A panel containing the necessary control devices.
(b) Control components mounted and wired in the structure (rheostats are mounted and wired only when specified for the particular application).
(c) Terminal boards for control circuits, mounted a minimum of 6 inches above the floor.
(d) Device and drive identification.

NEMA Standard 9-20-1973.

ICS 3-441.07 CLASSES OF OPEN MILL CONTROLLERS (SEE FIG. 3-441-1)

.01 Class A Open

A Class A open controller is a self-supported structure having the following features in addition to the common features listed in Part ICS 3-441.

(a) Panel extending to the floor.
(b) All armature circuit resistors mounted and wired in the structure.
(c) All shunt brake and field resistors wired and mounted in the structure.
(d) Grouped terminal facilities for armature and series field circuits (and for shunt field circuits when specified).
(e) Interconnecting main bus or cable.

.02 Class B Open

A Class B open controller is a non-self-supported structure having the following features in addition to the common features listed in Part ICS 3-441.

(a) Panel extending to the floor.
(b) Grouped terminal facilities for armature and series field circuits (and for shunt field circuits when specified).
(c) Interconnecting main bus or cable.

.03 Class C Open

A Class C open controller is a non-self-supported structure having the following features in addition to the common features listed in Part ICS 3-441:

(a) Panel extending to the floor.
(b) Grouped terminal facilities for armature and series field circuits (and for shunt field circuits when specified).

.04 Class D Open

A Class D open controller is a non-self-supported structure having only the common features listed in Part ICS 3-441.

NEMA Standard 9-20-1973.

Copyright National Electrical Manufacturers Association
Provided by IHS under license with NEMA
No reproduction or networking permitted without license from IHS
Not for Resale

ICS 3-441.08 COMMON FEATURES OF ENCLOSED MILL CONTROLLERS

All classes of enclosed mill controllers have the following features:

(a) A panel containing the necessary control devices.
(b) Control components mounted and wired.
(c) Terminal boards for control circuits, mounted a minimum of 6 inches above the floor.
(d) Device and drive identification.
(e) A control enclosure in accordance with Part ICS 6-110 of NEMA Standards Publication No. ICS 6 (nonventilated Type 1 unless otherwise specified).

NOTE I—Where deleterious heating of other control devices is anticipated due to the proximity of brake, field or control resistors or rheostats, these resistive devices shall be mounted external to the control enclosure or, when specified, in a ventilated Type 1CV resistor enclosure.

NOTE II—Armature circuit power resistors may be specified to be mounted separately or to be integrally attached to Class B, C or D enclosed controllers. They may be specified to be of open or enclosed construction. (*This note is approved as Authorized Engineering Information.*)

NOTE III—When enclosed construction is specified for armature circuit power resistor mounting, a ventilated Type 1CV enclosure shall be used unless otherwise specified.

NEMA Standard 9-20-1973.

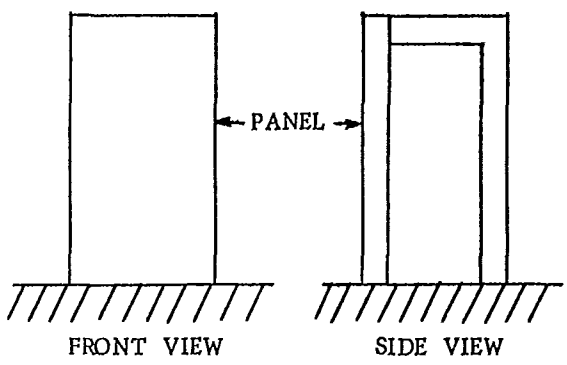

CLASS "A"—Includes grouped terminal facilities for armature and series field circuits, interconnecting bus for multiple panels, and provisions for mounting armature power resistors.

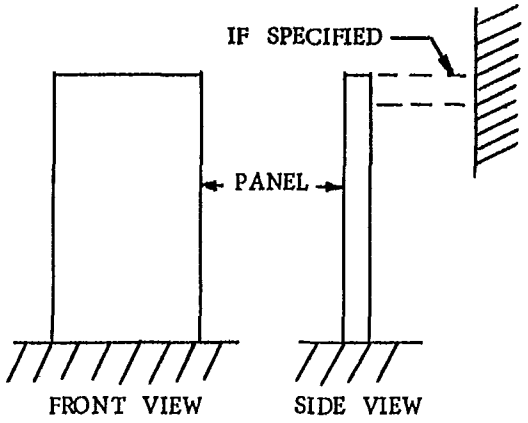

CLASS "B"—Includes grouped terminal facilities for armature and series field circuits, and interconnecting bus for multiple panels.

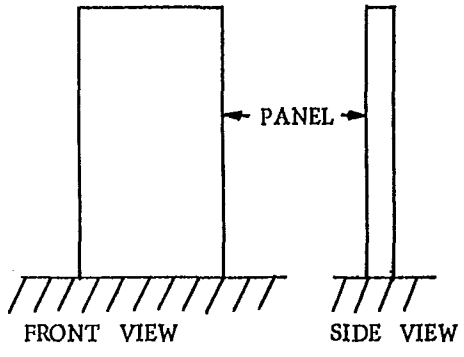

CLASS "C"—Includes grouped terminal facilities for armature and series field circuits.

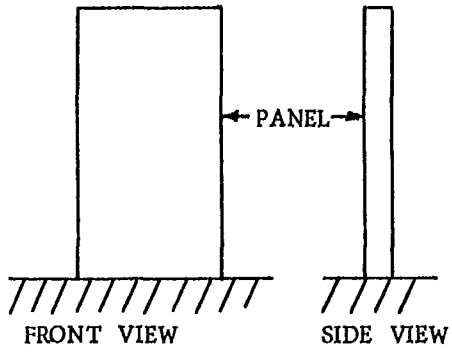

CLASS "D"—Panels do not necessarily extend to floor.

Fig. 3-441-1
EXAMPLES ILLUSTRATING CLASSES OF OPEN-TYPE MILL CONTROLLERS

Copyright National Electrical Manufacturers Association
Provided by IHS under license with NEMA
No reproduction or networking permitted without license from IHS
Not for Resale

ICS 3-441.09 CLASSES OF ENCLOSED MILL CONTROLLERS

.01 Class A Enclosed

A Class A enclosed controller is a self-supporting structure having the following features in addition to the common features listed in Part ICS 3-441:

(a) Panel extending to the floor.
(b) Grouped terminal facilities for armature and series field circuits (and for shunt field circuits when specified).
(c) Interconnecting main bus or cable.
(d) All shunt brakes and field resistors mounted and wired in the structure.
(e) All armature circuit power resistors mounted and wired in a ventilated enclosure adjacent and attached to, but external from, the control enclosure. The resistor enclosure shall be Type 1CV unless otherwise specified.

.02 Class B Enclosed

A Class B enclosed controller is a self-supporting structure having the following features in addition to the common features listed in Part ICS 31-441.

(a) Panel extending to the floor.
(b) Grouped terminal facilities for armature and series field circuits (and for shunt field circuits when specified).
(c) Interconnecting main bus or cable.

.03 Class C Enclosed

A Class C enclosed controller is a self-supporting structure having the following features in addition to the common features listed in Part ICS 3-441:

(a) Panel extending to the floor.
(b) Grouped terminal facilities for armature and series field circuits (and for shunt field circuits when specified).

.04 Class D Enclosed

A Class D enclosed controller is a self-supporting structure having only the features listed in Part ICS 3-441.

NEMA Standard 9-20-1973.

RATINGS

ICS 3-441.20 DC CONTACTOR RATINGS

Direct-current contactors shall be rated in accordance with Tables 3-441-1 and 3-441-2. These ratings apply at 230 to 250 volts. For voltages other than 230 to 250 volts, the current ratings of the contactors shall be not less than the full-load current rating of the motor at that voltage.

The number of accelerating contactors is exclusive of the plugging contactor of a reversing controller.

The minimum contactor rating of magnetic controllers shall be the 25-ampere 8-hour rating.

NEMA Standard 9-20-1973.

When higher minimum contactor ratings are required, they should be specified.

Authorized Engineering Information 9-20-1973.

Table 3-441-1
CONTINUOUS DUTY

Contactor			Minimum Number of Accelerating Contactors	
Size	8-hour Open Rating, Amperes	Horsepower at 230 Volts	Mill Motors	General-purpose motors*
1	25	5	1	1
2	50	10	2	2
3	100	25	2	2
4	150	40	2	2
5	300	75	2	3
6	600	150	3	4
7	900	225	3	4
8	1350	350	4	5
9	2500	600	5	6

* All motors which are not of the AISE Mill Design shall be considered as motors rated at 240 volts.

Table 3-441-2
MILL DUTY (1-HOUR RATED MOTORS)

Contactor				Minimum Number of Accelerating Contactors
		Mill Rating		
Size	8-hour Open Rating, Amperes	Amperes	Horsepower at 230 Volts	
1	25	30	7-1/2	1
2	50	67	15	2
3	100	133	35	2
4	150	200	55	2
5	300	400	110	2
6	600	800	225	2 or 3*
7	900	1200	330	3
8	1350	1800	500	4
9	2500	3350	1000	5

* As required by the particular application.

ICS 3-441.21 TYPES OF DC CONSTANT-VOLTAGE MAGNETIC CONTROLLERS

Direct-current constant-voltage magnetic controllers shall be of one of the following types and shall be provided with the devices shown in Table 3-441-3.

.01 Type A for Mill-type Series-wound Motors

A1 Nonreversing (NR)
A2 Nonreversing with armature shunt (NRAS)
A3 Reversing with plugging (RP)
A4 Reversing with plugging and armature shunt (RPAS)
A5 Reversing with line-excited field dynamic braking (RDBL)
A6 Reversing with self-excited field dynamic braking (RDBS)

Copyright National Electrical Manufacturers Association
Provided by IHS under license with NEMA
No reproduction or networking permitted without license from IHS
Not for Resale

.02 Type B for Mill-type Compound-wound Motors

B1 Nonreversing (NR)
B2 Nonreversing with dynamic braking (NRDB)
B3 Reversing with plugging (RP)
B4 Reversing nonplugging with dynamic braking (RDB)
B5 Reversing with plugging and dynamic braking (RPDB)

.03 Type C for Mill-type Constant-speed Shunt-wound or Stabilized Shunt-wound Motors

C1 Nonreversing (NR)
C2 Nonreversing with dynamic braking (NRDB)
C3 Reversing with plugging (RP)
C4 Reversing nonplugging with dynamic braking (RDB)
C5 Reversing with plugging and dynamic braking (RPDB)

.04 Type D for Mill-type Adjustable-speed Shunt-wound or Stabilized Shunt-wound Motors

D1 Nonreversing (NR)
D2 Nonreversing with dynamic braking (NRDB)
D3 Reversing with plugging (RP)
D4 Reversing nonplugging with dynamic braking (RDB)
D5 Reversing with plugging and dynamic braking (RPDB)

.05 Type E for General-purpose Constant-speed Shunt-wound or Stabilized Shunt-wound Motors

E1 Nonreversing (NR)
E2 Nonreversing with dynamic braking (NRDB)
E3 Reversing with plugging (RP)
E4 Reversing nonplugging with dynamic braking (RDB)
E5 Reversing with plugging and dynamic braking (RPDB)

.06 Type F for General-purpose Adjustable-speed Shunt-wound or Stabilized Shunt-wound Motors

F1 Nonreversing (NR)
F2 Nonreversing with dynamic braking (NRDB)
F3 Reversing nonplugging with dynamic braking (RDB)

NEMA Standard 9-20-1973.

ICS 3-441.22 RESISTOR CLASSIFICATION

The minimum resistor classification to be used with controllers is Class 150 (see Part ICS 2-213 of NEMA Standards Publication No. ICS 2).

NEMA Standard 9-20-1973.

Copyright National Electrical Manufacturers Association
Provided by IHS under license with NEMA
No reproduction or networking permitted without license from IHS
Not for Resale

Copyright National Electrical Manufacturers Association
Provided by IHS under license with NEMA
No reproduction or networking permitted without license from IHS

Table 3-441-3
EQUIPMENT REQUIRED FOR DC MAGNETIC METAL MILL CONTROLLERS

Minimum Equipment	Mill Motor Type															
	Series Wound						Compound Wound					Constant-speed Shunt Wound or Stabilized Shunt Wound				
	NR A1	NRAS A2	RP A3	RPAS A4	RDBL A5	RDBS A6	NR B1	NRDB B2	RP B3	RDB B4	RPDB B5	NR C1	NRDB C2	RP C3	RDB C4	RPDB C5
(a) Line contactors	2	2	1	1	1	1	2	2	1	1	1	2	2	1	1	1
(b) Armature shunt contactors	...	1	...	1	1	...	...	*	...	*	*	...	*	...	*	*
(c) Set of reversing contactors	...	...	1	1	1	1	...	...	1	1	1	...	...	1	1	1
(d) Plugging contactors	...	...	1	1	...	...	...	...	1	...	1	...	...	1	...	1
(e) Field-loss relay if motor has 60 percent or more shunt field	...	...	...	...	...	...	1	1	1	1	1	...	...	...	...	...
(f) Field-discharge means	...	...	...	...	...	...	1	1	1	1	1	1	1	1	1	1
(g) Dynamic-braking contactor	...	...	...	...	1	2	...	1	...	1	1	...	1	...	1	1
(h) Means to control series field polarity	...	...	...	...	...	1	...	...	...	...	...	...	...	...	...	...
(i) Field-loss relay	...	...	...	...	...	...	...	...	...	...	...	1	1	1	1	1
(j) Field-accelerating relay if speed range is more than 2 to 1	...	...	...	...	...	...	...	...	...	...	...	...	...	...	...	...
(k) Field-accelerating relay if speed range is 2 to 1 or less	...	...	...	...	...	...	...	...	...	...	...	...	...	...	...	...
(l) Field-protective relay	...	...	...	...	...	...	...	...	...	...	...	...	...	...	...	...
(m) Field-protective resistor	...	...	...	...	...	...	...	...	...	...	...	...	...	...	...	...
(n) Double-pole main-line isolation switch, load-break switch or circuit breaker, with provision for lockout	1	1	1	1	1	1	1	1	1	1	1	1	1	1	1	1
(o) Multiple-pole control circuit switch and fuses, circuit breakers, or fuse pullout	1	1	1	1	1	1	1	1	1	1	1	1	1	1	1	1
(p) Automatically reset overload protective relays	2	2	2	2	2	2	2	2	2	2	2	2	2	2	2	2
(q) Undervoltage relay	**	**	**	**	**	**	**	**	**	**	**	**	**	**	**	**
(r) Accelerating contactors with means for timing the acceleration	††	††	††	††	††	††	††	††	††	††	††	††	††	††	††	††
(s) Automatic control of plugging	...	...	1	1	...	...	...	...	1	...	1	...	...	1	...	1
(t) Automatic means to prevent plugging	...	...	...	...	1	1	...	...	...	1	...	...	...	...	1	...

(Continued)

ICS 3-83
6470247 0001846 7
Not for Resale

Copyright National Electrical Manufacturers Association
Provided by IHS under license with NEMA
No reproduction or networking permitted without license from IHS

Table 3-441-3 (*Continued*)
EQUIPMENT REQUIRED FOR DC MAGNETIC METAL MILL CONTROLLERS

Minimum Equipment	Mill Motor Type: Adjustable-speed Shunt Wound or Stabilized Shunt Wound					General-purpose Motor Type: Constant-speed Shunt Wound or Stabilized Shunt Wound					General-purpose Motor Type: Adjustable-speed Shunt Wound or Stabilized Shunt Wound		
	NR D1	NRDB D2	RP D3	RDB D4	RPDB D5	NR E1	NRDB E2	RP E3	RDB E4	RPDB E5	NR F1	NRDB F2	RDB F3
(a) Line contactors	2	2	1	1	1	2	2	1	1	1	2	2	1
(b) Armature shunt contactors	...	*	*	*	*	...	*	...	*	*	...	*	*
(c) Set of reversing contactors	...	...	1	1	1	...	...	1	1	1	...	...	1
(d) Plugging contactors	...	...	1	...	1	...	...	1	...	1	...	...	...
(e) Field-loss relay if motor has 60 percent or more shunt field	...	...	...	...	...	...	...	...	...	...	...	...	...
(f) Field-discharge means	1	1	1	1	1	1	1	1	1	1	1	1	1
(g) Dynamic-braking contactor	...	1	...	1	1	...	1	...	1	1	...	1	1
(h) Means to control series field polarity	...	...	...	...	...	...	...	...	...	...	...	...	...
(i) Field-loss relay	1	1	1	1	1	1	1	1	1	1	1	1	1
(j) Field-accelerating relay if speed range is more than 2 to 1	1†	1†	1†	1†	1†	...	...	...	...	...	1†	1†	1†
(k) Field-accelerating relay if speed range is 2 to 1 or less	1‡	1‡	1‡	1‡	1‡	...	...	...	...	...	1‡	1‡	1‡
(l) Field-protective relay	...	...	...	...	...	1	1	1	1	1	1	1	1
(m) Field-protective resistor	...	...	...	...	...	1	1	1	1	1	1	1	1
(n) Double-pole main-line isolation switch, load-break switch or circuit breaker, with provision for lockout	1	1	1	1	1	1	1	1	1	1	1	1	1
(o) Multiple-pole control circuit switch and fuses, circuit breakers, or fuse pullout	1	1	1	1	1	1	1	1	1	1	1	1	1
(p) Automatically reset overload protective relays	2	2	2	2	2	2	2	2	2	2	2	2	2
(q) Undervoltage relay	**	**	**	**	**	**	**	**	**	**	**	**	**
(r) Accelerating contactors with means for timing the acceleration	††	††	††	††	††	††	††	††	††	††	††	††	††
(s) Automatic control of plugging	...	...	1	...	1	...	...	1	...	1	...	...	...
(t) Automatic means to prevent plugging	...	...	...	1	...	...	...	...	1	...	...	...	1

* If the motor controlled has a shunt field, the dynamic-braking contactor may serve as an armature shunt contactor. (This note has been approved as Authorized Engineering Information.)
† One field-decelerating relay is required if the motor is subjected to rapid speed changes or high deceleration over any speed range.
‡ One field-accelerating relay may be required if the motor is driving a high-inertia load. (This note has been approved as Authorized Engineering Information.)
** One undervoltage relay when the controller is operated from a master switch.
†† The number of accelerating contactors shall be in accordance with ICS 3-441.

ICS 3-83
6470247 0001847 9
Not for Resale

Part ICS 3-442

GENERAL STANDARDS FOR CRANE CONTROLLERS

The standards in this part apply to controllers for crane service as applied to direct-current and wound-rotor alternating-current motors, 600 volts or less. The provisions of this part also apply to Part ICS 3-443. The types of cranes to which these standards are applicable are defined in the following American National Standards:

B30.2-1967 Safety Code for Overhead and Gantry Cranes
B30.3-1975 Hammerhead Tower Cranes
B30.4-1973 Safety Standard for Portal, Tower and Pillar Cranes

The definitions and standards of Part ICS 3-100 and NEMA Standards Publication No. ICS 1 apply to this part unless otherwise specified.

GENERAL INFORMATION AND FEATURES

ICS 3-442.05 CRANE CONTROLLER CLASSIFICATIONS

.01 General

The crane controller class (I or II) should be specified by the controller purchaser.

.02 Class I

Class I crane controllers are intended for use with all Crane Manufacturers Association of American (CMAA) crane service classes except A2 and B.

.03 Class II

Class II crane controllers are intended for use with CMAA crane service classes A2 and B (infrequent use or light industrial service).

.04 Definitions

For definitions of CMAA crane service classes, see the CMAA Publication No. 70, *Specifications for Electric Overhead Traveling Cranes.*

Authorized Engineering Information 11-6-1975.

ICS 3-442.06 GENERAL PROVISIONS FOR DC AND AC CONTROLLERS

(a) Each controller shall provide means for starting, stopping, speed control and reversing.

(b) Electric-braking means shall be provided for hoists which are not equipped with mechanical load brakes.

(c) Undervoltage and overload protection shall be provided for each motor. The devices necessary to provide this protection shall be integral with the panels for the individual motions in accordance with the appropriate tables in Part ICS 3-443, unless grouped protection is specified. When grouped protection is specified, common undervoltage protection and individual motor running overload protection shall be grouped in accordance with the appropriate tables in Part ICS 3-443.

NEMA Standard 11-6-1975.

ICS 3-442.07 DISCONNECTING MEANS FOR CRANES

Unless the installation is covered by the exception stated in Section 610-32 of the *National Electrical Code,* a motor circuit switch or circuit breaker with provision for locking in the open position shall be provided in the leads from the runway contact conductors on all cranes. Where this disconnecting means is not readily accessible from the crane operating station, means shall be provided at the crane operating station to open the common power circuit to the crane motors.

NEMA Standard 11-6-1975.

ICS 3-442.08 RATING OF DISCONNECTING MEANS FOR CRANES ▲

The disconnecting means for cranes shall have a continuous current rating equal to or greater than the larger of:

(a) Fifty percent of the combined intermittent-duty ratings of all the motors* on the crane, plus the rated current of all auxiliary loads* (other than crane motions) on the load side of the disconnecting means, or

(b) Seventy-five percent of the sum of the intermittent-duty ratings of all motors* required for the crane motion having the largest horsepower plus the rated current of all auxiliary loads* (other than crane motions) on the load side of the disconnecting means.

Electrically operated disconnecting means shall be capable of operating in conjunction with a pilot device having contacts with a maximum current rating of Contact Rating Designation "B" for AC control and "P" for DC control, in accordance with ICS 2-125.20 and .21 of NEMA Standards Publication ICS No. 2.

NEMA Standard 7-14-1982.

* For systems with power conversion equipment on the crane, the current shall be the equivalent input current.

NEMA Standard 11-6-1975.

▲ Revised 7-14-1982.

Copyright National Electrical Manufacturers Association
Provided by IHS under license with NEMA
No reproduction or networking permitted without license from IHS
Not for Resale

ICS 3-442.09 BRANCH CIRCUIT PROTECTION

The branch circuit protection required by Article 610 of the *National Electrical Code* may be achieved by devices on the controllers for each motion, when specified, or by separately mounted devices.

Authorized Engineering Information 11-6-1975.

ICS 3-442.10 RESISTORS

All power circuit resistors shall be provided with terminal facilities and shall be mounted in substantial end frames.

Power circuit resistors shall be selected from Table 2-213-2 or Table 2-213-3 in Part ICS 2-213 of NEMA Standards Publication No. ICS 2. CMAA Class D, E or F cranes shall have a rating not less than Class 160, unless otherwise specified.

When the application requires continuous duty, speed regulating resistors shall be selected in accordance with NOTE (c) of Table 2-213-4 of NEMA Standards Publication No. ICS 2.

NEMA Standard 11-6-1975.

ICS 3-442.11 ELECTRICALLY OPERATED BRAKES

Electrically operated brakes should meet the applicable requirements of American National Standards B30.2, B30.3, or B30.4.

Authorized Engineering Information 11-6-1975.

ICS 3-442.12 TERMINATIONS FOR POWER CABLES

Terminal facilities shall be provided in the controller for power cables and shall have the same rating as the contactors.

Incoming line leads shall terminate directly at the line side of the utilizing devices.

NEMA Standard 11-6-1975.

ICS 3-442.13 STEPS OF HAND CONTROL FOR OPERATOR

If the speed range is covered in steps, the master switch or control station shall provide for the following steps of control:

(a) For all crane motions, a minimum of three hand-controlled speed points in each direction, except that:
  (1) For Class I cab-operated hoist controllers with three or more accelerating contactors a minimum of five hand-controlled speed points in each direction shall be provided.
  (2) For alternating current Class II controllers rated less than 8 horsepower a minimum of two hand-controlled speed points in each direction is required.
  (3) For floor-operated bridge and trolley motions a minimum of one hand-controlled point in each direction is required.

(b) When specified, a drift point (no power, no brake) shall be included as a hand-controlled speed point in addition to the above minimum requirements for bridge and trolley motions.

NEMA Standard 11-5-1975.

ICS 3-442.14 DIRECTION OF OPERATION OF MASTER SWITCH LEVERS

The direction of operation of master switch levers shall be as shown in Figure 3-442-1.

NEMA Standard 11-6-1975.

ICS 3-442.15 SUSPENDED PENDENT OR WIRED PORTABLE MASTER CONTROL STATIONS

.01 Devices Required ▲

Suspended stations shall include the following devices in addition to those required for each crane motion:

(a) A momentary contact pushbutton or switch or a maintained contact pushbutton arranged to open one side of the control circuit which feeds the motor control panels and the protective devices. This pushbutton shall be marked in red and labeled "Power Off."

NOTE: Power off does not eliminate all live connections to the pendent station. A disconnect switch on the crane removes power to permit maintenance work on the station.

Authorized Engineering Information 3-6-1985.

(b) A momentary contact pushbutton arranged to reset the control circuit undervoltage protective device and labeled "Power On."

(c) Terminal for grounding exposed metal parts.

The hoist, bridge and trolley switches shall return to the OFF position when the operating handle, arm or button is released. This is a spring-return type of switch, commonly known as a "deadman" control.

.02 Direction of Controlled Motion

The direction of the motion which is controlled shall be indicated on the master switch station in accordance with American National Standard B30.2.

.03 Maximum Voltage

The voltage at pendent or portable control stations shall not exceed 150 volts alternating current or 300 volts direct current.

NEMA Standard 7-14-1982.

▲ Revised 7-14-1982.

Copyright National Electrical Manufacturers Association
Provided by IHS under license with NEMA
No reproduction or networking permitted without license from IHS
Not for Resale

Part ICS 3-443

DC AND AC CONTROLLERS FOR CRANES

The standards in this part apply to controllers for direct-current and wound-rotor alternating-current motors used with electric powered cranes. Part ICS 3-442 also applies to the controllers covered in this part. The definitions and standards of Part ICS 3-100 and NEMA Standards Publication No. ICS 1 apply to this part unless otherwise specified.

CONSTANT-POTENTIAL MAGNETIC CONTROLLERS FOR DC MOTORS

ICS 3-443.01 CONTROLLER CONTACTORS

.01 Contactor Interrupting Ability

Contactors shall have a load-current interrupting ability in accordance with ICS 2-110.05.02 (Class B) of NEMA Standards Publication No. ICS 2.

.02 Ratings of Line and Directional Contactors at 230 to 250 Volts

The intermittent-duty horsepower and current ratings of contactors used in the power circuits of direct-current controllers at 230 and 250 volts shall be.

(a) Selected on the basis of the following intermittent-duty horsepower ratings of the direct-current motors:
  (1) Totally-enclosed NonVentilated Motor—30-minute rating for hoists, 1-hour rating for bridge or trolley.
  (2) Self-ventilated Motor—1-hour rating for all motions.

(b) In accordance with Table 3-443-1.

(c) Not less than the intermittent-duty horsepower and current ratings of the motors used for cranes.

.03 Ratings of Line and Directional Contactors at Voltages other than 230 to 250 Volts

The ratings of line and directional contactors at 500 or 550 volts shall be in accordance with Table 3-443-2. A straight line interpolation shall be used for voltages between 250 volts and 500 volts.

.04 Ratings of Accelerating, Plugging and Low-torque Contactors

Accelerating, plugging and low-torque contactors up to and including size 6 shall have the same rating as line or directional contactors; contactors above size 6 that do not carry all of the motor current need not have the same rating as line or directional contactors.

.05 Ratings of Common-line Contactors used for Grouped Protection

The size of contactors used for grouped protection (responding to overload or undervoltage relays) shall be as shown in Table 3-441-1 for 230 to 250 volts and in Table 3-443-2 for 500 to 550 volts. At voltages between 250 and 500 volts, a straight line interpolation shall be used to determine the intermittent-duty rating of the power circuit contactors used for grouped protection. In no case shall the size of contactors used for grouped protection be less than the rating of the largest contactor used on any of the protected controllers. The 8-hour open rating of the power circuit contactors used for grouped protection shall be not less than that which meets the more severe of the following requirements:

(a) Fifty percent of the sum of the full-load currents of all of the intermittent duty motors.

(b) Seventy-five percent of the full-load current of the intermittent-duty motor or motors required for the crane motion having the highest horsepower.

NEMA Standard 11-6-1975.

ICS 3-443.02 NUMBER OF ACCELERATING CONTACTORS

The number of accelerating contactors per motion for magnetic controllers is exclusive of the plugging or low-torque contactor and shall be no less than that shown in Table 3-443-3.

NEMA Standard 11-6-1975.

ISC 3-443.03 RATING OF CONTROLLER POWER CIRCUIT ISOLATING MEANS

Each controller power circuit isolating means shall have a current rating not less than the 8-hour open ampere rating of the line contactor of the circuit which it isolates.

NEMA Standard 11-6-1975.

ISC 3-443.04 EQUIPMENT REQUIRED

Magnetic controllers shall have the number of accelerating contactors specified in Table 3-443-3, the equipment listed in Table 3-443-4 and, if grouped protection is specified, the equipment listed in Table 3-443-5.

NEMA Standard 11-6-1975.

Copyright National Electrical Manufacturers Association
Provided by IHS under license with NEMA
No reproduction or networking permitted without license from IHS
Not for Resale

Table 3-443-1
RATINGS AT 230 TO 250 VOLTS OF DC CONTACTORS FOR CONSTANT-POTENTIAL CONTROLLERS

Size of Contactor	8-hour Open Rating, Amperes	Maximum Intermittent-duty Rating, Amperes	Rating for Controller Maximum Horsepower	Rating for Grouped Protection	
				Maximum Total Motor Horsepower	Maximum Horsepower for Any Motion
1	25	30	7-1/2	10	7-1/2
2	50	67	15	22	15
3	100	133	35	55	35
4	150	200	55	80	55
5	300	400	110	160	110
6	600	800	225	320	225
7	900	1200	330	480	330
8	1350	1800	500	725	500
9	2500	3330	1000	...	...

Table 3-443-2
RATINGS AT 500 OR 550 VOLTS OF DC CONTACTORS FOR CONSTANT-POTENTIAL CONTROLLERS

Size of Contactor	Rating for Controller Maximum Horsepower	Rated for Grouped Protection	
		Maximum Total Motor Horsepower	Maximum Horsepower for Any Motion
1	10	15	10
2	25	35	25
3	55	80	55
4	80	120	80
5	165	240	165
6	330	480	330

Table 3-443-3 ▲
NUMBER OF ACCELERATING CONTACTORS

Maximum Horsepower		Minimum Number of Accelerating Contactors per Motion for DC Controllers	
At 250 Volts	At 550 Volts	Class I Controller	Class II Controller
7-1/2	10	2	2
15	25	3	2
35	55	3	3
55	80	3	3
110	165	3	...
225	330	4	...
330	...	4	...
500	...	4	...
1000	...	4	...

▲Revised 6-21-1979.

Copyright National Electrical Manufacturers Association
Provided by IHS under license with NEMA
No reproduction or networking permitted without license from IHS
Not for Resale

Table 3-443-4▲
MINIMUM EQUIPMENT FOR MAGNETIC CONTROLLERS FOR DC MOTORS

	Class I Controller		Class II Controller	
	Bridge or Trolley	Hoist	Bridge or Trolley	Hoist
1. Multipole power circuit isolating switch or circuit breaker with provision for locking in the open position for each motor or for each pair of motors in the case of duplex controllers.*	X	X	X	X
2. Multipole control circuit switch and fuses, circuit breaker, or fuse pullout.*	X	X	X	X
3. Automatically reset inverse time trip overload relay in an ungrounded line for each motor.*	X	X	X	X
4. Automatically reset instantaneous trip overload relay in an ungrounded line for each motor circuit or in an ungrounded line for a pair of motors unless equivalent protection is provided in the power circuit isolating means.*	X	X	X	X
5. Undervoltage relay to provide undervoltage protection for each motor.*	X	X	X	X
6. Line (power circuit) contactor for each motor.*†	X	X	...	...
7. Set of mechanically interlocked reversing contactors (four normally open poles per set) per motor†	X	...	X	...
8. Plugging contactor for each motor with means for automatically preventing its closing unless the motor is operating at approximately zero speed.†	X	...	X	...
9. Set of accelerating contactors. See Table 3-443-3.†	X	X	X	X
(a) Delay means for each step	X	...	...	...
(b) Delay means for the last accelerating contactor	...	...	X	X
(c) Delay means for at least two steps in the hoisting direction. For duplex hoists, delay means is common to both motors	...	X	...	...
10. Low-torque contactor or means for slow-speed hoisting with light load	...	X	...	...
11. Set of Switches to permit emergency operation of one or more motors on multimotor drives when required by the particular application.	X	X	...	...
12. Set of devices to provide dynamic braking control in the lowering direction with or without line voltage and with the master switch in the OFF position.‡	...	X	...	X
13. Set of mechanically interlocked hoisting and lowering contactors	...	X	...	X
14. Brake relay when required by the particular application	X	X	X	X
15. Protection against motor shunt field loss	X	X	X	X

* These items may be omitted if panels are ordered for use with grouped protection and if grouped protection equipment is provided in accordance with Table 3-443-5.
† Where two motors are operated in parallel (duplex), each contactor may be a two-pole device.
‡ Not required when mechanical load braking is used.

▲Revised 6-21-1979.

Copyright National Electrical Manufacturers Association
Provided by IHS under license with NEMA
No reproduction or networking permitted without license from IHS
Not for Resale

Table 3-443-5 ▲
MINIMUM EQUIPMENT FOR MAGNETIC CONTROLLERS PROVIDING GROUPED PROTECTION FOR DC MOTORS

	Class I Controller	Class II Controller
1. Multipole control circuit isolating switch and fuses, circuit breaker, or fuse pull-out, common to all motions*	X	X
2. Automatically reset inverse-time trip running overload relay in an ungrounded line for each motor*	X	X
3. Automatically reset instantaneous trip overload relay in an ungrounded common line. The relay shall respond to the total current in the crane system, unless equivalent protection is provided by fuses or circuit breaker*	X	X
4. Line (power circuit) contactor(s) to open both sides of the line to all motions, to provide undervoltage protection, to open the control supply to all motions, and to open the dynamic lowering loop of dynamic lowering controllers using series brakes*	X	...
5. Line (power circuit) contactor(s) to open an ungrounded line common to all motions, to provide undervoltage protection, to open the control supply to all motions, and to open the dynamic lowering loop of dynamic lowering controllers using series brakes*	...	X
6. On a cab-operated crane, a pushbutton station to provide three-wire control of the line (power circuit) contactors(s). The pushbutton for removing power shall be marked in red and labeled "Power Off." On a floor-operated crane, those push-buttons required by ICS 3-442.15.01	X	X

* These devices shall be assembled on a separate panel or on the panel(s) for some crane motion(s) as specified.

▲ Revised 7-14-1982.

Copyright National Electrical Manufacturers Association
Provided by IHS under license with NEMA
No reproduction or networking permitted without license from IHS
Not for Resale

ADJUSTABLE-VOLTAGE CONTROLLERS FOR DC MOTORS

ICS 3-443.05 CONTROLLER CONTACTORS ▲

Each contactor handling direct-current power shall have a load-current interrupting ability in accordance with ICS 2-110.05.02 (Class B) of NEMA Standards Publication No. ICS 2 and shall be selected so that the horsepower rating and the 8-hour or intermittent-duty current rating in Table 3-443-6 are not less than the current and time ratings of the associated motor(s).

NEMA Standard 11-6-1975.

ICS 3-443.06 RATING OF LOOP OR LINE CONTACTOR ▲

The loop or line contactor shall have a continuous current rating not less than 75 percent of the full-load current used to determine the intermittent-duty rating of the motor(s) or, if ahead of the power conversion equipment, the intermittent current shall be the equivalent input current.

NEMA Standard 11-6-1975.

ICS 3-443.07 EQUIPMENT REQUIRED

Adjustable voltage controllers shall have the equipment listed in Table 3-443-7.

NEMA Standard 11-6-1975.

Table 3-443-6
RATINGS FOR DC CONTACTORS FOR ADJUSTABLE-VOLTAGE CONTROLLERS

Size of Contactor	8-hour Open Rating, Amperes	Maximum Intermittent-duty Rating, Amperes	Maximum Horsepower at 230 Volts*
1	25	30	7-1/2
2	50	67	15
3	100	133	35
4	150	200	55
5	300	400	110
6	600	800	225
7	900	1200	330
8	1350	1800	500
9	2500	3330	1000

* For other voltages, the horsepower is directly proportional to the voltage up to a maximum of 600 volts.

Table 3-443-7
MINIMUM EQUIPMENT FOR CLASS I AND II ADJUSTABLE-VOLTAGE CONTROLLERS FOR DC MOTORS

	Bridge or Trolley	Hoist
1. Control circuit fuse(s), switch and fuse(s), circuit breaker or fuse pullout.*	X	X
2. Automatically reset inverse time trip running overload relay, one for each motor circuit or, when specified, an integral motor thermal sensing device	X	X
3. Automatically reset instantaneous trip overload relay for each motor circuit or, in a common line, for a pair of motors unless equivalent protection is provided	X	X
4. Undervoltage protection for each motor	X	X
5. If alternating-current to direct-current static conversion equipment is used, short-circuit protection	X	X
6. Set(s) of static reversing devices or mechanically interlocked reversing contactors	X	X
7. Adjustable means to provide a limit on acceleration or torque	X	X
8. Set(s) of devices to provide speed control in lowering overhauling loads	...	X
9. Protection against motor shunt field loss	X	X
10. If alternating-current to direct-current static conversion equipment is used, a direct-current loop contactor or a line contactor	X	X
11. If motor-generator equipment is used, a direct-current loop contactor or its equivalent	X	X
12. Set of switches to permit emergency operation of one or more motors on multi-motor drives when required by the particular application	X	X
13. Brake relay when required by the particular application	X	X
14. Motor and/or generator shunt field discharge means when required	X	X

* This item may be common to all motors.

▲ Editorially revised.

Copyright National Electrical Manufacturers Association
Provided by IHS under license with NEMA
No reproduction or networking permitted without license from IHS
Not for Resale

MAGNETIC CONTROLLERS FOR AC WOUND-ROTOR MOTORS

ICS 3-443.08 CONTROLLER CONTACTORS

.01 Contractor Interrupting Ability

Contactor shall have a Class A load-current interrupting ability in accordance with Part ICS 2-100 of NEMA Standards Publication No. ICS 2.

.02 Ratings of Line and Directional Contactors

The horsepower and intermittent-duty current ratings of contactors used in the power circuits of alternating-current controllers shall be not less than the corresponding ratings of the intermittent-duty motors used for cranes. Contactor current and horsepower ratings shall be as shown in Table 3-443-8.

.03 Ratings of Line and Directional Contactors at Voltages not Listed in Table 3-443-8 but Less than 460 Volts

For voltages not listed but less than 460 volts, the intermittent-duty current rating of the contactors shall be in accordance with ICS 3-443.08.02 and not less than the full-load current used to determine the intermittent rating of the motor.

NEMA Standard 11-6-1975.

.04 Ratings of Accelerating Plugging and Low Torque Contactors ▲

Accelerating plugging and low torque contactors shall have an intermittent-duty current rating not less than the full-load secondary current of the motor. When used for motor secondary control, the intermittent-duty ampere rating of a three-pole alternating-current contactor, with its poles connected in delta, shall be 1.5 times the intermittent-duty current rating shown in Table 3-443-8.

NEMA Standard 7-14-1982.

.05 Ratings of Line Contactors Used for Grouped Protection

The size of contactors used for grouped protection (responding to overload or undervoltage relays) shall be as shown in Table 3-443-8 but not less than the rating of the largest primary contactor used on any of the protected controllers.

NEMA Standard 11-6-1975.

ICS 3-443.09 NUMBER OF ACCELERATING CONTACTORS

The number of accelerating contactors per motion for magnetic controllers is exclusive of plugging or low-torque contactors and shall be no less than that shown in Table 3-443-9.

NEMA Standard 11-6-1975.

ICS 3-443.10 RATING OF CONTROLLER POWER CIRCUIT ISOLATING MEANS

Each controller power circuit isolating means shall have a current rating not less than the 8-hour open ampere rating of the line contactor of the circuit which it isolates.

NEMA Standard 11-6-1975.

ICS 3-443.11 EQUIPMENT REQUIRED

Magnetic controllers shall have the number of accelerating contactors specified in Table 3-443-9, the equipment listed in Table 3-443-10 and, if grouped protection is specified, the equipment listed in Table 3-443-11.

NEMA Standard 11-6-1975.

Table 3-443-8
AC CONTACTOR RATINGS

Size of Contactor	8-hour Open Rating, Amperes	Maximum Intermittent-duty Rating, Amperes*	Rating for Controller Maximum Horsepower		Rating for Grouped Protection: Maximum Total Motor Horsepower		Rating for Grouped Protection: Maximum Horsepower for Any Motion	
			230 Volts	460 and 575 Volts	230 Volts	460 and 575 Volts	230 Volts	460 and 575 Volts
0	20	20	3	5	6	6	3	5
1	30	30	7-1/2	10	10	20	7-1/2	10
2	50	67	20	40	30	60	20	40
3	100	133	40	80	63	125	40	80
4	150	200	63	125	110	225	63	125
5	300	400	150	300	225	450	150	300
6	600	800	300	600	450	900	300	600
7	900	1200	450	900	675	1350	450	900
8	1350	1800	600	1200	900	1800	600	1200

* The ultimate trip current of overload (overcurrent) relays or other motor protective devices used shall not exceed 115 percent of these values of 125 percent of the motor full-load current, whichever is smaller.

▲ Revised 7-14-1982.

Copyright National Electrical Manufacturers Association
Provided by IHS under license with NEMA
No reproduction or networking permitted without license from IHS
Not for Resale

Table 3-443-9 ▲

Motor Horsepower	Minimum Number of Accelerating Contactors Per Motion for AC Hoist, Bridge and Trolley Controllers	
	Class I	Class II
Less than 8	2	1*
8 thru 15	2	2
16 thru 30	3	2*
31 thru 75	3	3
76 thru 125	4	3*
126 thru 200	4	...
greater than 200	5	...

* A 10 percent permanent slip resistance shall be provided on bridge and trolley drives.

Table 3-443-10 ▲
MINIMUM EQUIPMENT FOR MAGNETIC CONTROLLERS FOR AC MOTORS

	Class I Controller		Class II Controller	
	Bridge or Trolley	Hoist	Bridge or Trolley	Hoist
1. Multipole power circuit isolating switch or circuit breaker with provision for locking in the open position*	X	X	X	X
2. Multipole control circuit switch and fuses, circuit breaker, or fuse pullout*	X	X	X	X
3. Automatically reset inverse time trip running over-load protection in each phase for each motor* or, when specified, an integral motor thermal sensing device	X	X	X	X
4. Undervoltage relay to provide undervoltage protection for each motor*	X	X	X	X
5. Set of mechanically and electrically interlocked reversing contactors to open all lines	X	X	X	X
6. Plugging contactor for each motor with means for automatically preventing its closing unless the motor is operating at approximately zero speed	X	...	X	...
7. Set of accelerating contactors in the motor secondary. See Table 3-443-9	X	X	X	X
(a) Delay means for each accelerating contactor required by Table 3-443-9	X	X	...	...
(b) Delay means for all but the first of the accelerating contactors required by Table 3-443-9, but not less than one	...	...	X	X
8. Low torque contactor or means for slow-speed hoisting with light load	...	X	...	...
9. Brake relay when required by the particular application	X	X	X	X
10. Set of devices to provide counter-torque or other forms of electrical braking when mechanical load braking is not provided	...	X	...	X

* These items may be omitted if panels are ordered for use with grouped protection and if grouped protection equipment is provided in accordance with Table 3-443-11.

▲Revised 6-21-1979.

Copyright National Electrical Manufacturers Association
Provided by IHS under license with NEMA
No reproduction or networking permitted without license from IHS
Not for Resale

Table 3-443-11▲
MINIMUM EQUIPMENT FOR MAGNETIC CONTROLLERS PROVIDING GROUPED PROTECTION FOR AC MOTORS

	Class I Controller	Class II Controller
1. Multipole control circuit isolating switch and fuses, circuit breaker, or fuse pullout, common to all motions*	X	X
2. Automatically reset inverse time running overload protection in each phase for each motor or, when specified, an integral motor thermal sensing device*	X	X
3. Line (power circuit) contactor(s) to open all power lines to all motions and to provide undervoltage protection*	X	X
4. On a cab-operated crane, a pushbutton station to provide three-wire control of the line (power circuit) contactor(s). The pushbutton for removing power shall be marked in red. On a floor-operated crane, those pushbuttons required by ICS 3-442.15.01	X	X

* These devices shall be assembled on a separate panel, or the main hoist panel, or the panel for some other motion as specified.

STATIC CONTROLLERS FOR AC WOUND-ROTOR MOTORS

ICS 3-443.12 CONTROLLER CONTACTORS

.01 Contactor Interrupting Ability

Contactors shall have a Class A load-current interrupting ability in accordance with Part ICS 2-110 of NEMA Standards Publication No. ICS 2.

.02 Ratings of Line and Directional Contactors

Contactor current and horsepower ratings shall be as shown in Table 3-443-8, except that the intermittent-duty rating of the contactor shall be not less than the line current when the drive is running at rated motor torque and the maximum speed provided at that torque.

.03 Ratings of Line and Directional Contactors at Voltages not Listed in Table 3-443-8 but Less than 460 Volts

For voltages not listed but less than 460 volts, the intermittent-duty current rating of the contactors shall be in accordance with ICS 3-443.12.02.

.04 Ratings of Accelerating Contactors

Accelerating contactors shall have an intermittent-duty current rating not less than the secondary current of the motor when the drive is running at rated motor torque and the maximum speed provided at that torque. When used for motor secondary control, the intermittent-duty ampere rating of a three-pole alternating-current contactor, with its poles connected in delta, shall be 1.5 times the intermittent-duty current rating shown in Table 3-443-8.

NEMA Standard 11-6-1976.

ICS 3-443.13 RATING OF CONTROLLER POWER CIRCUIT ISOLATING MEANS

Each controller power circuit isolating means shall have a current rating not less than the 8-hour open ampere rating of the contactor of the circuit which it isolates.

NEMA Standard 11-6-1975.

ICS 3-443.14 EQUIPMENT REQUIRED

Static controllers shall have the equipment listed in Table 3-443-12.

NEMA Standard 11-6-1975.

▲Revised 6-21-1979.

Copyright National Electrical Manufacturers Association
Provided by IHS under license with NEMA
No reproduction or networking permitted without license from IHS
Not for Resale

Table 3-443-12
MINIMUM EQUIPMENT FOR CLASS I AND II STATIC CONTROLLERS FOR AC MOTORS

	Bridge or Trolley	Hoist
1. Multipole main circuit isolating switch or circuit breaker with provision for locking in the open position*	X	X
2. Multipole control circuit switch and fuses, circuit breaker, or fuse pullout*	X	X
3. Automatically reset inverse time trip running overload protection in each phase for each motor or, when specified, an integral motor thermal sensing device*	X	X
4. Undervoltage protection*	X	X
5. Set of static reversing devices or mechanically interlocked reversing contactors	X	X
6. Adjustable means to provide a limit on acceleration or torque	X	X
7. Means for regulating motor speed hoisting and lowering	...	X
8. Brake relay when required by the particular application	X	X
9. Line contactor when primary static reversing is used	X	X

* These items may be omitted if panels are ordered for use with grouped protection and if grouped protection equipment is provided in accordance with Table 3-443-11.

Copyright National Electrical Manufacturers Association
Provided by IHS under license with NEMA
No reproduction or networking permitted without license from IHS
Not for Resale

Part ICS 3-445

CRANE AND HOIST POWER CIRCUIT LIMIT SWITCHES

Part ICS 3-445 covers limit switches used in the power circuit of motors applied to cranes and hoists. The definitions of Part ICS 2-225 apply to this part unless otherwise specified. The definitions and standards of NEMA Standard Publication No. ICS 1 also apply to this part.

DEFINITIONS

ICS 3-445.01 DEFINITIONS

Crane and Hoist Power Circuit Limit Switch

As defined in ICS 2-225.01, a crane and hoist power circuit limit switch is a snap-acting switch which interrupts motor current and, directly or indirectly, initiates braking action when the load block or other mechanism causes the switch to reach the operating position. This switch is suspended weight-operated or lever operated. This switch is not intended to function as an operational limit switch which is actuated on each lift.

NEMA Standard 5-12-1982.

.01 Suspended Weight-Operated

A weight (reset weight), suspended by a cable from the operating lever of the switch, overcomes the torque of the operating arm counterweight, thereby maintaining the power contacts in the normal contact position. If the load block or other mechanism is raised above the point where the reset weight contacts the load block or other mechanism, the reset weight is raised along with it, whereupon the counterweight on the switch operating lever supplies the torque to permit the contacts to change state. The switch resets automatically when the load block or other mechanism is lowered away from the reset weight.

NEMA Standard 5-12-1982.

.02 Lever Operated

A weighted or spring-biased operating lever maintains the power contacts in the normal contact position. If the load block or other mechanism is raised above the point where it contacts the operating lever, the load block or other mechanism supplies the force to permit the contacts to change state. The switch resets automatically when the load block or other mechanism is lowered away from the operating lever.

NEMA Standard 5-12-1982.

Copyright National Electrical Manufacturers Association
Provided by IHS under license with NEMA
No reproduction or networking permitted without license from IHS

Not for Resale

GENERAL INFORMATION AND FEATURES

ICS 3-445.05 AUXILIARY CONTACTS

When crane and hoist power circuit limit switches contain auxiliary control circuit contacts, in addition to the power circuit contacts, the ratings for these control circuit contacts, shall be in accordance with Part ICS 2-125 of NEMA Standards Publication No. ICS 2. NEMA Standard 5-12-1982.

ICS 3-445.06 MECHANICAL CONFIGURATIONS

Crane and hoist power circuit limit switches shall be specified to be right-hand or left-hand operated as shown in Figure 3-445-1.

NEMA Standard 5-12-1982.

ICS 3-445.07 ENVIRONMENTAL REQUIREMENTS

Crane and hoist power circuit limit switch enclosures shall be in accordance with NEMA Standards Publication No. ICS 6.

NEMA Standard 5-12-1982.

ICS 3-445.08 TERMINAL LEAD ENCLOSURES

When crane and hoist power circuit limit switches are provided with terminal lead enclosures, such enclosures should be suitable for the environment specified for the switch.

Authorized Engineering Information 5-12-1982.

(LEVER OPERATED SWITCH)*

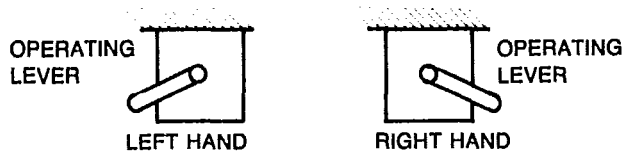

STRAIGHT OPERATING LEVER (SUSPENDED WEIGHT SWITCH)*

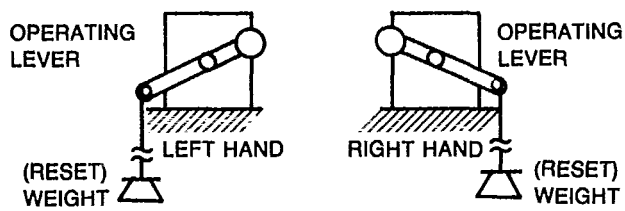

90° OPERATING LEVER (SUSPENDED WEIGHT SWITCH)*

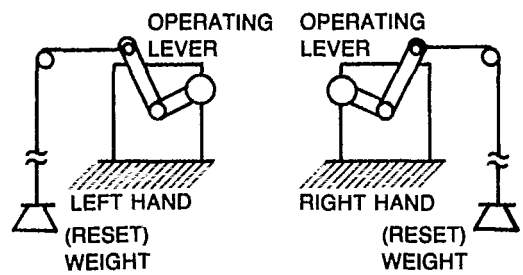

Figure 3-445-1
MECHANICAL CONFIGURATIONS

*ALL SWITCHES SHOWN IN NORMAL CONTACT (RUNNING) POSITION

Copyright National Electrical Manufacturers Association
Provided by IHS under license with NEMA
No reproduction or networking permitted without license from IHS
Not for Resale

RATINGS

ICS 3-445.20 CURRENT AND HORSEPOWER RATINGS

Crane and hoist power circuit limit switches shall be rated in accordance with Table 3-445-1.

NEMA Standard 5-12-1982.

ICS 3-445.21 VOLTAGE RATINGS

Crane and hoist power circuit limit switches shall be rated at 250 or 600 volts DC; 240, 480, or 600 volts AC, 50/60 Hertz, or any combination of these ratings.

NEMA Standard 5-12-1982.

ICS 3-445.22 MAKE AND BREAK CAPACITY

Crane and hoist power circuit limit switches shall be capable of making and breaking current at the specified voltage and load condition in accordance with Table 3-445-2. Verification tests for make and break capacities shall be in accordance with ICS 3-445.42.

NEMA Standard 5-12-1982.

Table 3-445-2
MAKE/BREAK (OPERATING OVERLOAD) TEST LEVELS

	Make and Break			
	I/Ie	V/Ve	Power Factor	L/R* (ms)
AC**	6	1.1	40% - 50%	...
DC	4	1.1	...	2.5

where: I = test current

V = test voltage (apply the provisions of UL 508--24.10 dated 8/19/77)

Ve = highest rated voltage (refer to ICS 3-445.21)

$$\text{for AC} \quad \begin{cases} Ie = \text{continuous current for } Ve \leq 480 \\ Ie = \text{continuous current for } Ve > 480 \times \dfrac{480}{Ve} \end{cases}$$

$$\text{for DC} \quad \begin{cases} Ie = \text{continuous current for } Ve \leq 250 \\ Ie = \text{continuous current for } Ve > 250 \times \dfrac{250}{Ve} \end{cases}$$

* Tolerance ± 15%
** The tabulated values are expressed as RMS steady state values. The transient values may be different. However, the steady state values define the making and breaking capacity.

Table 3-445-1
CURRENT AND HORSEPOWER RATINGS OF CRANE AND HOIST POWER CIRCUIT LIMIT SWITCHES

NEMA Size	Continuous Current Rating		Direct Current Horsepower Rating*		Three Phase Alternating Current Horsepower Rating*		
	AC	DC	230-250 Volts	550-600 Volts	220-240 Volts	440-480 Volts	550-600 Volts
1	27	22½	5	5	7½	10	10
2	45	45	10	10	15	25	25
3	90	90	25	25	25	50	50
4	135	135	50	50	50	100	100
5	270	270	100	100	100	200	200
6	540	540	200	200	200	400	400
7	810	810	300	300	300	600	600
8	1215	1215	450	450	450	900	900

* Based on an intermittent rating at a 50% or less duty cycle with an on time not to exceed 10 minutes. (See ICS 3-445.87.)

Copyright National Electrical Manufacturers Association
Provided by IHS under license with NEMA
No reproduction or networking permitted without license from IHS
Not for Resale

DESIGN TESTS AND PERFORMANCE

Design tests of crane and hoist power circuit limit switches are performed on one or more representative new samples of apparatus to demonstrate the conformance of the product design with these standards. The design tests are not intended to be production tests.

ICS 3-445.40 TEMPERATURE RISE OF CURRENT CARRYING PARTS

Tests and limits described in Part ICS 1-109.10 through 1-109.15 apply. AC tests shall be run at 60 Hertz.

NEMA Standard 5-12-1982.

ICS 3-445.41 DIELECTRIC TEST

Tests and limits described in Parts ICS 1-109.20 and .21 apply. All tests shall be run at 60 Hertz. Tests shall be run after exhausting the ionized gases, with the cover installed, both before and after the make and break test and the electrical endurance test.

NEMA Standard 5-12-1982.

ICS 3-445.42 MAKE AND BREAK (OPERATING OVERLOAD) TEST

The purpose of the verification test for the making and breaking capacities is to verify that the switch is capable of making and breaking the operating overload currents stated in Table 3-445-2, and not to verify the contact wear or erosion over long periods of operation.

Authorized Engineering Information 5-12-1982.

.01 Test Conditions

The switch shall be connected as shown in the test circuit, Figure 3-445-2. The switch shall be tested with its cover installed. The enclosure cover shall

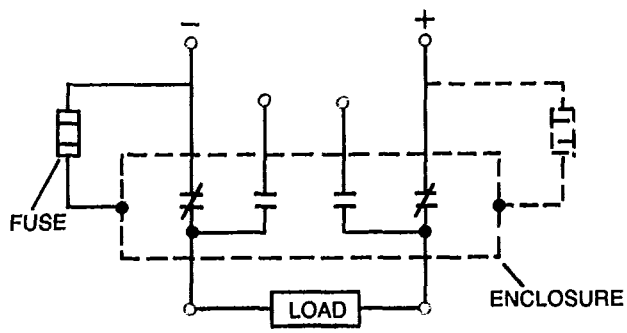

DC TEST CIRCUIT

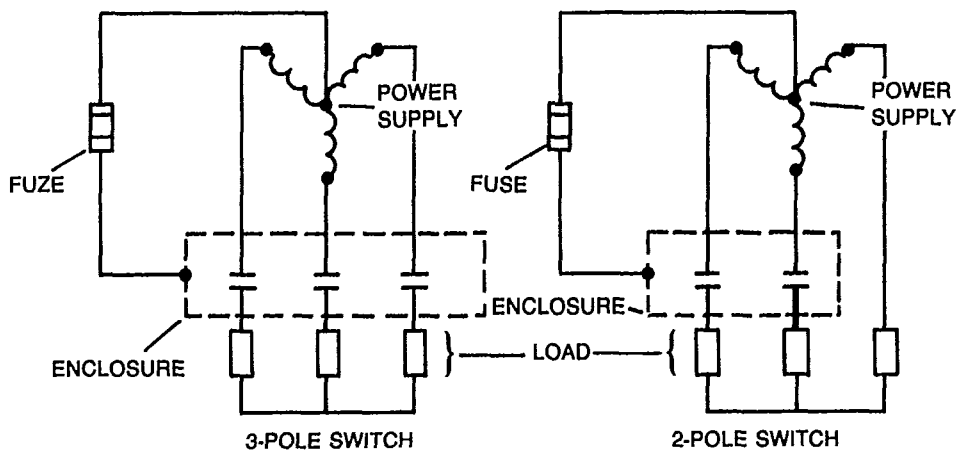

AC TEST CIRCUIT

Figure 3-445-2

MAKE AND BREAK TEST CIRCUITS

Copyright National Electrical Manufacturers Association
Provided by IHS under license with NEMA
No reproduction or networking permitted without license from IHS
Not for Resale

be removed, after half of the total required operations, to exhaust the ionized gases and then replaced for the remaining operations. The switch enclosure shall be connected to a 30-ampere non-time-delay cartridge fuse for the detection of fault current. The switch shall be exercised with the make time sufficiently long for the current to reach a steady state value but not less than 100 milliseconds. The current flow period shall be less than 5 seconds. The time for one make/break cycle shall not exceed 1 minute. These tests shall be run with either a new or refurbished switch. AC tests shall be run at 60 Hertz.

On switches equipped with Form C contacts, test shall be conducted using normally open contacts and then repeated using normally closed contacts.

NEMA Standard 5-12-1982.

.02 Test Criteria

The AC switch shall successfully make and break 20 times the current specified in Table 3-445-2.

The DC switch shall successfully make and break 10 times the current specified in Table 3-445-2 with the enclosure fuse connected to the negative power pole, followed by 10 times with the fuse connected to the positive power pole.

There shall be no permanent arcing, no flashover between poles, no opening of the fuse, and no welding of the contacts during the test. The switch shall successfully withstand dielectric testing per ICS 3-445.41 before and after the make and break test.

NEMA Standard 5-12-1982.

When Form C contacts are employed, it is permissible to have an arcing overlap during switch operation (refer to ICS 3-445.88).

Authorized Engineering Information 5-12-1982.

ICS 3-445.43 MECHANICAL AND ELECTRICAL ENDURANCE TESTS

The purpose of these tests is to verify the minimum mechanical and electrical endurance of a power circuit limit switch. Such a switch functions to interrupt motor current and, thereby directly or indirectly, to limit the final travel of the load block or other mechanism. This switch is not intended to function as an operational limit switch, which is activated on each lift.

Authorized Engineering Information 5-12-1982.

.01 Test Conditions

These tests shall be run with either a new or refurbished switch.

Mechanical—a lever operated switch shall be tested from its free position to at least 75 percent of its total overtravel. A suspended weight limit switch shall be tested from stop to stop of the operating lever, with maximum reset weight as shown in Table

Electrical—The switch shall be tested, with its cover removed, to prevent a buildup of excessive amounts of ionized gas and shall be connected and exercised as in the Make and Break Test. Actuation of the switch shall be as in the mechanical test. AC electrical tests shall be run at 60 Hertz.

NEMA Standard 5-12-1982.

.02 Test Criteria

Mechanical—The minimum mechanical endurance requirement for a power circuit limit switch shall be 100,000 cycles.

Electrical—The AC switch shall successfully make and break 6,000 times the load requirement specified in Table 3-445-3.

The DC switch shall successfully make and break 3,000 times the current specified in Table 3-445-3, with the enclosure fuse connected to the negative power pole, immediately followed by 3,000 times with the enclosure fuse connected to the positive power pole.

There shall be no repairing or replacing of switch parts, including contact tips, for the duration of the test.

There shall be no permanent arcing, no flashover between poles, no opening of the fuse, and no welding of contacts during the test. The switch shall successfully withstand dielectric testing, before and after the endurance test, per ICS 3-445.41.

NEMA Standard 5-12-1982.

Table 3-445-3
ELECTRICAL ENDURANCE TEST LEVELS

	Make and Break			
	I/Ie	V/Ve	Power Factor	L/R* (ms)
AC**	2.0	1	40% - 50%	...
DC	2.0	1	...	2

where: I = test current

V = test voltage (apply the provisions of UL 508--24.10 dated 8/19/77)

Ve = highest rated voltage (refer to ICS 3-445.21)

$$\text{for AC} < \begin{matrix} \text{Ie = continuous current for Ve} \leqslant 480 \\ \text{Ie = continuous current for Ve} > 480 \times \frac{480}{\text{Ve}} \end{matrix}$$

$$\text{for DC} < \begin{matrix} \text{Ie = continuous current for Ve} \leqslant 250 \\ \text{Ie = continuous current for Ve} > 250 \times \frac{250}{\text{Ve}} \end{matrix}$$

* Tolerance ± 15%

** The tabulated values are expressed as RMS steady state values. The transient values may be different. However, the steady state values define the making and breaking capacity.

Copyright National Electrical Manufacturers Association
Provided by IHS under license with NEMA
No reproduction or networking permitted without license from IHS
Not for Resale

MANUFACTURING

ICS 3-445.60 DEVICE MARKINGS

Crane and hoist power circuit limit switches shall be marked with the following data:

1. Rated Voltage
2. Horsepower at Rated Voltage
3. Manufacturer's name or Identifying Mark
4. Device Identification Number
5. NEMA Size
6. 3-phase AC, DC or 3-phase AC and DC
7. Frequency (AC only)

NEMA Standard 5-12-1982.

ICS 3-445.61 TERMINAL MARKING

Crane and hoist power circuit limit switches shall have their terminal markings as shown in Figure 3-445-3.

NEMA Standard 5-12-1982.

LIMIT SWITCHES SHOWN IN NORMAL CONTACT (RUNNING) POSITION

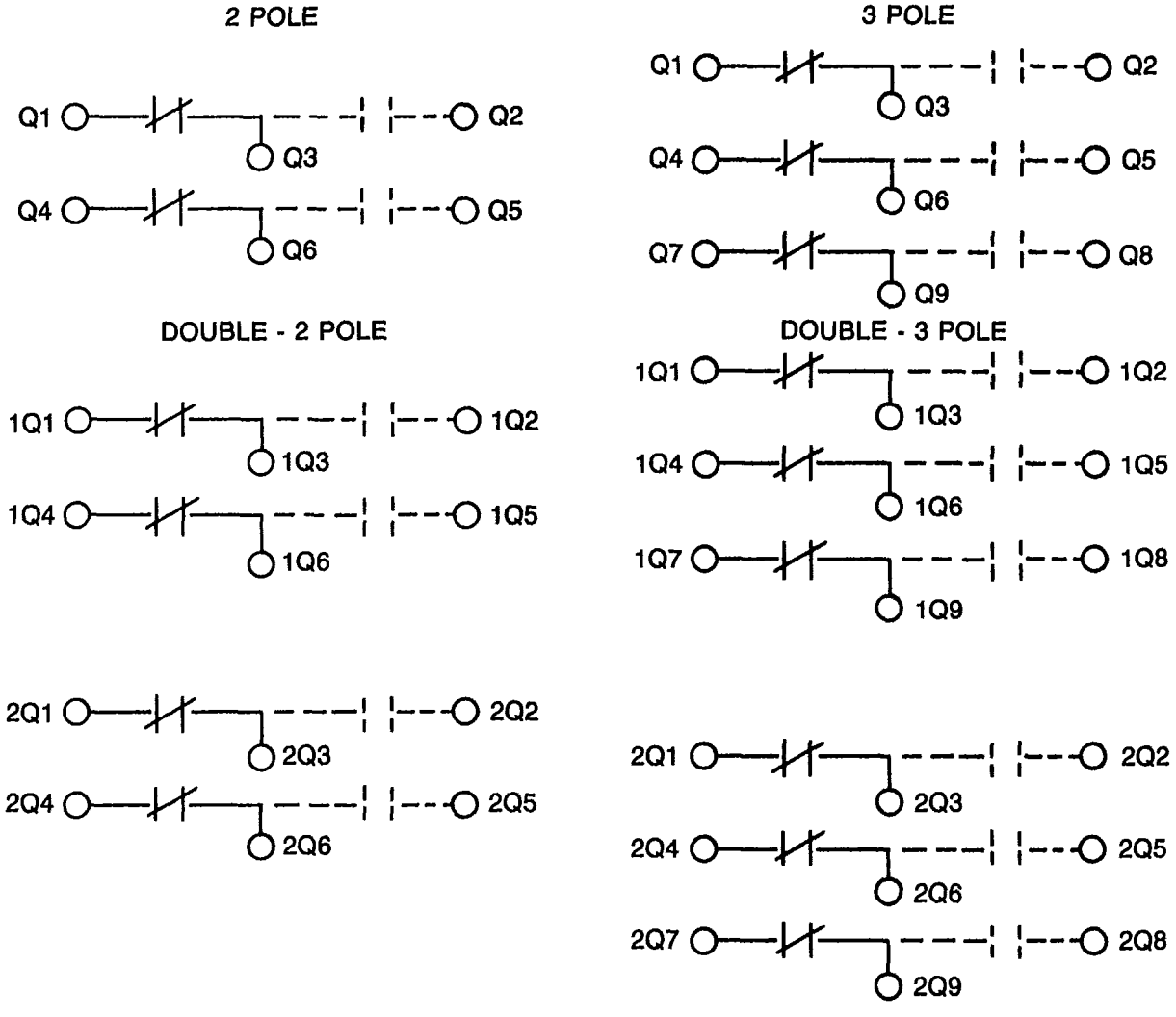

DOTTED LINES INDICATE FORM C VERSIONS

Figure 3-445-3
TERMINAL MARKINGS

Copyright National Electrical Manufacturers Association
Provided by IHS under license with NEMA
No reproduction or networking permitted without license from IHS
Not for Resale

APPLICATIONS

The crane and hoist power circuit limit switch function is to interrupt motor current and, thereby directly or indirectly, limit the final travel of load block or other mechanism. This switch is not intended to function as an operational limit switch, which is actuated on each lift. It is customary to test-operate the switch once every eight-hour shift to ensure its operating ability. (See ANSI Standard B30.20-1976, Overhead and Gantry Cranes, paragraph 2-3.2.4.)

ICS 3-445.80 CABLE SHEAVES

The design of the reset weight cable sheave(s) for crane and hoist power circuit limit switches should be the subject of special analysis in each application. The use of multiple sheaves is discouraged due to excess mechanical losses. The cable sheave should be of a diameter at least as large as that, recommended by the manufacturer, of the power circuit limit switch. The design and maintenance of the cable, sheave, and guard system should insure free running operation for the life of the limit switch. Particular attention should be paid to possible cable sag conditions.

If it is necessary to use a sheaved system, then the vector sum of the forces from the cable, sheave(s), and guard system (excluding the reset weight) tangent to the lever motion, should not exceed the weight of the maximum length of cable as shown in Table 3-445-4.

Authorized Engineering Information 5-12-1982.

ICS 3-445.81 CABLE LENGTH

The length of the cable supporting the suspended reset weight should include adequate allowances for hook-block travel, after the actuation and trip of the crane and hoist power circuit limit switch. Cables (of the size shown) should not exceed the maximum lengths shown in Table 3-445-4.

Authorized Engineering Information 5-12-1982.

ICS 3-445.82 RESET WEIGHTS

Crane and hoist power circuit limit switches should operate to the normal contact position when a weight is used equal to or exceeding the value of the minimum reset weight shown in Table 3-445-4. Specific switches may operate with less weight and may be furnished by the manufacturer with this lesser weight, provided the weight operates the specific switch to the normal contact position.

NEMA Size	Type	Cable Size (inches)	Maximum Permissible Length* (feet)	User Supplied Reset Weight (pounds)	
				Minimum**	Maximum
3	Single	¼	15	35	50
4	Single	⅜	20	55	80
4	Double	⅜	30	100	150
5	Single	⅜	20	100	150
5	Double	⅜	30	135	200
6	Single	⅜	20	135	200
6	Double	⅜	40	235	350
7	Single	½	40	265	400
7	Double	½	50	500	750
8	Single	½	40	265	400
8	Double	½	50	500	750

Table 3-445-4
RESET WEIGHTS AND CABLE LENGTHS

* Lengths based: ¼" - .11 lbs./foot
⅜" - .22 lbs./foot
½" - .42 lbs./foot

** Refer to ICS 3-445.82

Copyright National Electrical Manufacturers Association
Provided by IHS under license with NEMA
No reproduction or networking permitted without license from IHS
Not for Resale

The reset weight should not exceed the values of the maximum reset weights shown in Table 3-445-4. The crane and hoist power circuit limit switch manufacturer should be consulted when reset weights outside the limits shown in Table 3-445-4 are used.

Authorized Engineering Information 5-12-1982.

ICS 3-445.83 LEVER OPERATED SWITCH OVERTRAVEL

Load blocks or other mechanisms used to actuate level operated crane and hoist power circuit limit switches should be applied so as to stop prior to the overtravel limit position of the switch.

Authorized Engineering Information 5-12-1982.

ICS 3-445.84 FREQUENCY OF OPERATION

If a crane and hoist power circuit limit switch is not operated while under load, at least once in any given 8-hour period, the switch should be provided with power contacts suitable for continuous operation in the closed position. The 8-hour period is the elapsed time that the contacts, while carrying current, are at thermal equilibrium.

Authorized Engineering Information 5-12-1982.

ICS 3-445.85 LOW CURRENT DC OPERATION

If it is anticipated that any pole of a DC crane and hoist power circuit limit switch will be required to interrupt currents at very low levels compared to its rating, the manufacturer should be consulted.

Authorized Engineering Information 5-12-1982.

ICS 3-445.86 MAINTENANCE

A maintenance program and schedule should be established to meet the needs of each particular installation and to assure minimum downtime. The program should include, for example, tightening connections, inspecting for evidence of overheating, removing dust and dirt, confirming freedom of reset weight and cable, and replacing contacts when worn or when the contact follow-up and pressure have been reduced to a level which might impair the operation of the equipment.

Authorized Engineering Information 5-12-1982.

ICS 3-445.87 INTERMITTENT RATING APPLICATIONS

For applications exceeding 50 percent duty cycle, both the computed RMS current and the rated horsepower at the applied voltage must be less than or equal to the continuous current and horsepower ratings given in Table 3-445-1.

NEMA Standard 5-12-1982.

For ON times exceeding 10 minutes either the motor current must be less than or equal to the continuous current ratings given in Table 3-445-1 or the manufacturer must be consulted.

Authorized Engineering Information 5-12-1982.

ICS 3-445.88 REVERSING OR PLUGGING

Crane and hoist power circuit limit switches, employing Form C contacts, are not intended for direct reversing or plugging of motors due to the possibility of developing a short circuit through an arcing overlap between the normally-open and the normally-closed contacts. For reversing or plugging applications, consult with the manufacturer.

Authorized Engineering Information 5-12-1982.

Copyright National Electrical Manufacturers Association
Provided by IHS under license with NEMA
No reproduction or networking permitted without license from IHS
Not for Resale

Appendix A

REFERENCED STANDARDS

In this publication reference is made to the following standards listed below. Copies are available from the indicated sources.

I

American National Standards Institute
1430 Broadway
New York, NY 10018

B30.2.0-1976 *Overhead and Gantry Cranes, Top Running Bridge, Multiple Girder*

B30.3-1975 *Hammerhead Tower Cranes*

B30.4-1973 *Portal, Tower, and Pillar Cranes*

ANSI/NFPA 70-84 (ANSI Pub. No. C1) *National Electrical Code*

X3.28-1976 *Procedures for the Use of the Communication Control Characters of American National Standard Code for Information Interchange in Specified Data Communication Links*

II

Crane Manufacturers Association of America
1326 Freeport Road
Pittsburgh, PA 15238

Specification No. 70, revised 1975 *Specifications for Electric Overhead Traveling Cranes*

III

Electronics Industries Association
2001 I Street, N.W.
Washington, D.C. 20006

RS-232-C *Interface Between Data Terminal Equipment and Data Communication Equipment Employing Serial Binary Data Interchange*

IV

National Electrical Manufacturers Association
2101 L Street, N.W.
Washington, D.C. 20037

ICS 1-1978 *General Standards for Industrial Control and Systems*

ICS 2-1978 *Industrial Control Devices, Controllers and Assemblies*

ICS 4-1983 *Terminal Blocks for Industrial Control Equipment and Systems*

ICS 6-1978 *Enclosures for Industrial Controls and Systems*

V

National Fire Protection Association
470 Atlantic Avenue
Boston, MA 02210

ANSI/NFPA 70-84 (ANSI Pub. No. C1) *National Electrical Code*

Copyright National Electrical Manufacturers Association
Provided by IHS under license with NEMA
No reproduction or networking permitted without license from IHS
Not for Resale

NEMA STANDARDIZATION

The purpose of NEMA Standards, their classification and status are set forth in certain clauses of the NEMA Bylaws, which are quoted below:

Purpose of Standards

National Electrical Manufacturers Association Standards are adopted in the public interest and are designed to eliminate misunderstandings between the manufacturer and the purchaser and to assist the purchaser in selecting and obtaining the proper product for its particular need. Existence of a National Electrical Manufacturers Association Standard does not in any respect preclude any member or nonmember from manufacturing or selling products not conforming to the standard.

(Bylaw—Art. V, Sec. 1)

Definition of a Standard

A standard of the National Electrical Manufacturers Association defines a product, process or procedure with reference to one or more of the following: nomenclature, composition, construction, dimensions, tolerances, safety, operating characteristics, performance, rating, testing, and the service for which they are designed.

(Bylaw—Art. V, Sec. 2, Subsection A)

Dimensions

Where dimensions are given for interchangeability purposes, alternate dimensions satisfying the other provisions of the standards publication may be capable of otherwise equivalent performance.

(NEMA Policy Memorandum 84-2, dated June 7, 1984)

Classes of Standards

National Electrical Manufacturers Association Standards are of two classes:

1. NEMA Standard, which relates to a product commercially standardized and subject to repetitive manufacture, which standard has been approved by at least 90 percent of the members of the Subdivision eligible to vote thereon;
2. Suggested Standard for Future Design, which may not have been regularly applied to a commercial product, but which suggests a sound engineering approach to future development, which standard has been approved by at least two-thirds of the members of the Subdivision eligible to vote thereon.

(Bylaw—Art. V, Sec. 2, Subsection B)

Authorized Engineering Information

Authorized Engineering Information consists of explanatory data and other engineering information of an informative character not falling within the classification of NEMA Standard or Suggested Standard for Future Design.

(Bylaw—Art. V, Sec. 6, 1st Sentence)

Official Standards Proposal

An Official Standards Proposal is an official draft of a proposed standard which is formally recommended to an outside organization(s) for consideration, comment and/or approval.

(Bylaw—Art. V, Sec. 4, Subsection A)

Identification of Status

Standards in NEMA Standards Publications are identified in the foreword or following each standard as "NEMA Standard" or "Suggested Standard for Future Design." These indicate the status of the standard. These words are followed by a date which indicates when the standard was adopted in its present form by the Association.

The material identified as "Authorized Engineering Information" and "Official Standards Proposal" is designated similarly.

Copyright National Electrical Manufacturers Association
Provided by IHS under license with NEMA
No reproduction or networking permitted without license from IHS
Not for Resale

SYSTEMS GROUP
OF THE
INDUSTRIAL CONTROL AND SYSTEMS SECTION
OF THE
NATIONAL ELECTRICAL MANUFACTURERS ASSOCIATION

MEMBER COMPANIES

Allen-Bradley Company
Milwaukee, WI 53201

Automatic Switch Company
Florham Park, NJ 07932

Challenger Electrical Controls, Inc.
Cleveland, OH 44125

Cleveland Machine Controls, Inc.
Cleveland, OH 44125

Cyberex, Incorporated
Mentor, OH 44060

Eaton/Cutler-Hammer Products
Milwaukee, WI 53216

Electric Machinery Industrial Controls, Inc.
Macon, GA 31206

Emerson Electric Company
WER Industrial Division
Grand Island, NY 14072

Furnas Electric Company
Batavia, IL 60510

General Electric Company
Bloomington, IL 61701

Gould, Incorporated
Distribution & Controls Group
Spring House, PA 19477

Harnischfeger Corporation
Milwaukee, WI 53201

Harvey Hubbell, Incorporated
Hubbell Industrial Controls Div.
Madison, OH 44057

Industrial Solid State Controls, Inc.
York, PA 17405

Klockner-Moeller Corporation
Natick, MA 01760

Litton Industrial Products, Inc.
Louis Allis Division
Milwaukee, WI 53201

McGill Manufacturing Company
Valparaiso, IN 46383

Namco Controls
An Acme Cleveland Company
Cleveland, OH 44060

Parametrics
A Unit of Barry Wright
Orange, CT 06477

Pertron Controls Corporation
Canoga Park, CA 91304

Reliance Electric Company
Cleveland, OH 44117

Rise America, Incorporated
Parlin, NJ 08859

Robotron Division
Midland-Ross Company
Southfield, MI 48037-5090

Siemens-Allis, Inc.
Wichita Falls, TX 76307

Solitech
Division of Industrial Engg. & Equip. Co.
St. Louis, MO 63132

Square D Company
Milwaukee, WI 53212

Technitron, Incorporated
Carol Stream, IL 60187

Texas Instruments, Incorporated
Attleboro, MA 02703

Toshiba International Corporation
Houston, TX 77041

Ward Leonard Electric Co., Inc.
Mt. Vernon, NY 10550

Weltronic Company
Clare, MI 48617

Westinghouse Electric Corporation
Asheville, NC 28813

Copyright National Electrical Manufacturers Association
Provided by IHS under license with NEMA
No reproduction or networking permitted without license from IHS
Not for Resale
PROBLEM HARD COPY