NEMA ICS 16

INDUSTRIAL CONTROL AND SYSTEMS

MOTION/POSITION CONTROL MOTORS, CONTROLS, AND FEEDBACK DEVICES

--`,,`,,`-`-`,,`,,`,`,,`---

Copyright National Electrical Manufacturers Association
Provided by IHS under license with NEMA
No reproduction or networking permitted without license from IHS

Not for Resale

NEMA Standards Publication ICS 16

Motion/Position Control Motors, Controls, and Feedback Devices

Published by

National Electrical Manufacturers Association
1300 N. 17th Street
Rosslyn, Virginia 22209

© 1998, 1999, 2000, 2001 by National Electrical Manufacturers Association. All rights including translation into other languages, reserved under the Universal Copyright Convention, the Berne Convention for the Protection of Literary and Artistic Works, and the International and Pan American Copyright Conventions.

Copyright National Electrical Manufacturers Association
Provided by IHS under license with NEMA
No reproduction or networking permitted without license from IHS
Not for Resale

Copyright National Electrical Manufacturers Association
Provided by IHS under license with NEMA
No reproduction or networking permitted without license from IHS
Not for Resale

Contents

Foreword v

1 Scope 1

2 Normative references 1

3 Definitions 3

3.1 Terms common to motion control 3
3.1.1 Acceleration definitions 3
3.1.2 Current definitions 3
3.1.3 Dielectric strength 4
3.1.4 Direction of rotation 4
3.1.5 Duty cycle 4
3.1.6 Efficiency 4
3.1.7 Electrical noise 5
3.1.8 Electrical noise immunity 5
3.1.9 Electromagnetic interference 5
3.1.10 Input impedance 5
3.1.11 Lead 5
3.1.12 Moment of intertia 5
3.1.13 Motion control system 5
3.1.14 Pitch 6
3.1.15 Power dissipation 6
3.1.16 Thermal resistance 6
3.1.17 Rotor 6
3.1.18 Temperature definitions 6
3.1.19 Time constant definitions 7
3.1.20 Torque definitions 7
3.1.21 Torsional resonance 9
3.1.22 Velocity definitions 9

3.2 Terms common to control motors 9
3.2.1 General terms 9
3.2.2 Terms specific to servo motors 13
3.2.3 Terms specific to stepping motors 17

3.3 Terms common to feedback devices 25
3.3.1 General terms 25
3.3.2 Terms specific to encoders 32
3.3.3 Terms specific to resolvers 36

3.4 Terms common to control systems 38
3.4.1 General terms 38
3.4.2 Terms specific to servo motor controls 39
3.4.3 Terms specific to stepping motor controls 41

4 Control motors 47

4.1 Requirements common to all control motors 47
4.1.1 Ratings 47

Copyright National Electrical Manufacturers Association
Provided by IHS under license with NEMA
No reproduction or networking permitted without license from IHS
Not for Resale

4.1.2 Dimensions, tolerances, mounting, and measurement techniques 48
4.1.3 Enclosures 59
4.1.4 Functional tests and performance 66

4.2 Requirements common to all servo motors 78
4.2.1 Nameplate markings 78
4.2.2 Maximum allowable winding temperature rating 79
4.2.3 Functional tests and performance 80

4.3 Requirements common to all stepping motors 84
4.3.1 Nameplate markings 84
4.3.2 Maximum allowable winding temperature rating 85
4.3.3 Functional tests and performance 86
4.3.4 Alternative test method for stepping motors 98

4.4 Requirements for brush type servo motors only 106
4.4.1 Functional tests and performance 106

4.5 Requirements for brushless servo motors only 109
4.5.1 Functional tests and performance 109

5 Controls 113

5.1 Ratings 113
5.1.1 Ambient temperature 113
5.1.2 Basis of rating 113
5.1.3 Input voltage and frequency rating 113
5.1.4 Range of operating voltage and frequency 113
5.1.5 Input current ratings 114
5.2 Enclosures 114
5.3 Spacings 114
5.4 Nameplate markings 114
5.5 Application information 114
5.5.1 Stepping motor-drive configurations 114
5.5.2 Electronically commutated (brushless) motor-drive configurations 117

6 Position and velocity feedback devices 120

6.1 Rotary encoders 120
6.1.1 Common requirements 120
6.1.2 Requirements specific to bearing type encoders 144
6.1.3 Requirements specific to bearingless type encoders 155

6.2 Resolvers 158
6.2.1 Space and mounting requirements 158
6.2.2 Connections and terminations 160
6.2.3 Markings and data sheets 160
6.2.4 Application information 161
6.2.5 Tests and performance 161

7 Safety requirements for construction, and guide for selection, installation, and operation of motion control systems 164

Copyright National Electrical Manufacturers Association
Provided by IHS under license with NEMA
No reproduction or networking permitted without license from IHS
Not for Resale

7.1 General considerations 164
7.2 Motion control system 164
7.3 Construction 164
7.3.1 Rating and identification plates 164
7.3.2 Operating and maintenance data 164
7.3.3 Supply circuit disconnecting devices 165
7.3.4 Protection 165

Annex A Symbols for quantities and their units 167

Annex B Index of defined terms 171

Copyright National Electrical Manufacturers Association
Provided by IHS under license with NEMA
No reproduction or networking permitted without license from IHS
Not for Resale

--`,,`,,`-`-`,,`,,`,`,,`---

Copyright National Electrical Manufacturers Association
Provided by IHS under license with NEMA
No reproduction or networking permitted without license from IHS

Not for Resale

Foreword

This standards publication covers servo and stepping motors, feedback devices, and controls for use in a motion/position control system. The primary purpose of this standard is to assist users in the proper selection and application of the components of a motion/position control system, and to eliminate misunderstandings between manufacturers and users.

This standards publication provides technical information and specifications concerning performance, safety, tests, construction, and manufacture for products within the scope of this publication. The information and specifications are based on sound engineering principles, research, and records of test and field experience.

This standards publication was prepared by the Programmable Motion Control Technical Committee of the NEMA Industrial Automation Control Products and Systems Section. User needs and safety considerations were addressed during the preparation of this standard.

This standards publication will be regularly reviewed by the Programmable Motion Control Technical Committee for any revisions necessary to keep it up-to-date with technological and market changes. Comments or recommended revisions are welcome and should be submitted to:

Vice President, Engineering
National Electrical Manufacturers Association
1300 North 17th Street, Suite 1847
Rosslyn, VA 22209

To facilitate consideration by international standards groups, this standards publication has been developed according to the Directives of the *International Electrotechnical Commission* and the *International Organization for Standardization* for the drafting and presentation of international standards.

This standards publication was approved by the NEMA Industrial Automation Control Products and Systems Section. Section approval of this standard, however, does not necessarily imply that all section members voted for its approval or participated in its development. At the time this standard was approved, the Industrial Automation Control Products and Systems Section consisted of the following members:

ABB Control, Inc. – Wichita Falls, TX
Alstom Drives and Controls, Inc. – Pittsburgh, PA
Automatic Switch Company – Florham Park, NJ
Balluff, Inc. – Florence, KY
Carlo Gavazzi, Inc. – Buffalo Grove, IL
CMC Torque Systems – Billerica, MA
Control Concepts Corporation – Beaver, PA
Cooper Bussman – St. Louis, MO
Cummins, Inc. – Minneapolis, MN
Cyberex – Mentor, OH
Eaton Corporation – Milwaukee, WI
Echelon Corporation – Palo Alto, CA
Electro Switch Corporation – Weymouth, MA
Elliott Control Company – Hollister, CA

Copyright National Electrical Manufacturers Association
Provided by IHS under license with NEMA
No reproduction or networking permitted without license from IHS
Not for Resale

Entrelec, Inc. – Irving, TX
Firetrol, Inc. – Cary, NC
Fisher-Rosemount Systems, Inc. – Austin, TX
GE Fanuc Automation – Charlottesville, VA
GE Industrial Systems – Plainville, CT
Hubbell Incorporated – Madison, OH
Joslyn Clark Controls, Inc. – Lancaster, SC
Lexington Switch & Controls – Madison, OH
MagneTek Inc. – New Berlin, WI
Master Control Systems, Inc. – Lake Bluff, IL
Metron, Inc. – Denver, CO
Mitsubishi Electric Automation, Inc. – Vernon Hills, IL
Moeller Electric Corporation – Franklin, MA
Omron Electronics, LLC. – Schaumburg, IL
Peerless-Winsmith, Inc. – Warren, OH
Pepperl + Fuchs, Inc. – Twinsburg, OH
Phoenix Contact, Inc. – Harrisburg, PA
Pittman, a Div. of Penn Engineering & Manufacturing Corporation – Harleysville, PA
Post Glover Resistors, Inc. – Erlanger, KY
RENCO Encoders—Goleta, CA
Regal-Beloit Corporation – Bradenton, FL
Reliance Controls Corporation – Racine, WI
Robert Bosch Corporation – Avon, CT
Rockwell Automation – Milwaukee, WI
R Stahl, Inc. – Salem, NH
Russelectric, Inc. – Hingham, MA
Schneider Automation, Inc. – North Andover, MA
SEW-Eurodrive, Inc. – Lyman, SC
Siemens Energy & Automation – Alpharetta, GA
Square D – Lexington, KY
Texas Instruments, Inc. – Attleboro, MA
Torna Tech., Inc. – St. Laurent, Quebec, Canada
Toshiba International Corporation – Houston, TX
Total Control Products Inc. – Milford, OH
Turck, Inc. – Plymouth, MN
Tyco Electronics/AMP – Harrisburg, PA
WAGO Corp. – Germantown, WI
Weidmuller, Inc. – Richmond, VA
Yaskawa Electric America – Waukegan, IL

Copyright National Electrical Manufacturers Association
Provided by IHS under license with NEMA
No reproduction or networking permitted without license from IHS
Not for Resale

1 Scope

This standard covers the components used in a motion/position control system providing precise positioning, speed control, torque control, or any combination thereof. Examples of these components are control motors (servo and stepping motors), feedback devices (encoders and resolvers), and controls.

Excluded from the scope of this standard are general purpose industrial controls, systems, devices, and power supplies.

2 Normative references

The following normative documents contain provisions which, through reference in this text, constitute provisions of this standard. At the time of publication, the editions indicated were valid. All documents are subject to revision, and parties to agreements based on this standard are encouraged to investigate the possibility of applying the most recent editions of the normative documents indicated below. Copies are available from the sources indicated.

American National Standards Institute
11 West 42nd Street
New York, NY 10036

ANSI C84.1-1989, *Electric Power Systems and Equipment — Voltage Ratings*

Electronic Industries Association
2500 Wilson Boulevard
Arlington, VA 22201

232-D-1987, *Interface Between Data Terminal Equipment and Data Circuit-Terminating Equipment Employing Serial Binary Data Interchange*

The Institute of Electrical and Electronic Engineers, Inc.
445 Hoes Lane, P.O. Box 1331
Piscataway, NJ 08855

ANSI/IEEE 43-1974 (R1992), *Recommended Practice for Testing Insulation Resistance of Rotating Machinery*
ANSI/IEEE 100-1988, *Dictionary of Electrical and Electronics Terms*
ANSI/IEEE 112-1992, *Test Procedures for Polyphase Induction Machines*
ANSI/IEEE 113-1985, *Test Procedures for Direct-Current Machines*
ANSI/IEEE 115-1983 (R1991), *Test Procedures for Synchronous Machines*
ANSI/IEEE 118-1978, *Test Code for Resistance Measurement*
ANSI/IEEE 488.1-1987, *Digital Interface for Programmable Instrumentation*

Copyright National Electrical Manufacturers Association
Provided by IHS under license with NEMA
No reproduction or networking permitted without license from IHS
Not for Resale

International Electrotechnical Commission
copies available from:
American National Standards Institute
11 West 42nd Street
New York, NY 10036

IEC 60050, *International Electrotechnical Vocabulary*
IEC 60072-1 (1991), *Dimensions and output series for rotating electrical machines — Part 1: Frame numbers 56 to 400 and flange numbers 55 to 1080*
IEC 60529 (1989), *Degrees of protection provided by enclosures (IP Code)*

NOTE At the time of publication of this Standard, IEC 60034-20-1, *Rotating electrical machinery – Part 20-1: Control motors – Stepping motors* was an IEC Final Draft International Standard.

National Electrical Manufacturers Association
1300 North 17th Street, Suite 1847
Rosslyn, VA 22209

250-1997, *Enclosures for Electrical Equipment (1000 Volts Maximum)*
MG 1-1998, *Motors and Generators*
MG 2-1989 (R1994), *Safety Standard for Construction and Guide for Selection, Installation, and Use of Electric Motors and Generators*

National Fire Protection Association
Batterymarch Park
Quincy, MA 02269

ANSI/NFPA 70-1999, *National Electrical Code*

Copyright National Electrical Manufacturers Association
Provided by IHS under license with NEMA
No reproduction or networking permitted without license from IHS
Not for Resale

3 Definitions

Definitions for terms not listed below can be found in ANSI/IEEE 100 or IEC 60050. Wherever a definition for a term differs between these standards, the ANSI/IEEE 100 definition is preferred.

NOTE Terms defined below are categorized by product, technology, and/or physical phenomenon. Refer to annex B for an index of terms sorted alphabetically.

3.1 Terms common to motion control

3.1.1 Acceleration definitions

The following definitions are based on acceleration/deceleration, the time rate of change of velocity.

3.1.1.1
angular acceleration
Æ
time rate of change of angular velocity (*ø*)

NOTE Angular acceleration is expressed mathematically as $\frac{dw}{dt}$.

3.1.1.2
linear acceleration
a
time rate of change of linear velocity (*v*)

NOTE Linear acceleration is expressed mathematically as $\frac{dv}{dt}$.

3.1.2 Current definitions

3.1.2.1
form factor
FF
ratio of rms current to the absolute value of average current

NOTE Form factor is calculated by the formula

$$FF = \frac{\sqrt{\frac{1}{t_i}\int_0^{t_i} I^2\,dt}}{\left|\frac{1}{t_i}\int_0^{t_i} I\,dt\right|}$$

where

I is the current;

t_i is the time period i.

Copyright National Electrical Manufacturers Association
Provided by IHS under license with NEMA
No reproduction or networking permitted without license from IHS
Not for Resale

3.1.2.2
rms current
root mean square current
I_{rms}
current calculated by the formula

$$I_{rms} = \sqrt{\frac{\sum [(I_i)\,(FF)]^2 t_i}{\sum t_i}}$$

where

FF is the form factor (see 3.1.2.1);

I_i is the current at period *I*;

t_i is the time period *i*.

3.1.3
dielectric strength
ability of insulation to withstand a voltage with a specified maximum leakage current

3.1.4
direction of rotation
direction observed when facing the shaft extension associated with the motor mounting surface

NOTE All measurements used in this standard are based on a clockwise direction of shaft rotation.

3.1.5
duty cycle
relation between the on time and the off time of a device

NOTE Duty cycle is calculated by the formula

$$Duty\ Cycle = \left(\frac{On\ Time}{On\ Time + Off\ Time} \right) 100\%$$

3.1.6
efficiency
h
ratio of power output to power input of a machine, expressed as a percentage

NOTE Efficiency is calculated by the formula

$$h = \left(\frac{P_{out}}{P_{in}} \right) 100\%$$

--`,,`,,`-`-`,,`,,`,`,,`---

Copyright National Electrical Manufacturers Association
Provided by IHS under license with NEMA
No reproduction or networking permitted without license from IHS
Not for Resale

where

P_{in} is the input power;

P_{out} is the output power.

3.1.7
electrical noise
unwanted electrical energy that has the possibility of producing undesirable effects in the motion control system

NOTE Electrical noise includes electromagnetic interference (EMI) and radio frequency interference (RFI).

3.1.8
electrical noise immunity
extent to which the motion control system prevents an electrical noise from producing undesirable effects in the system

3.1.9
electromagnetic interference
EMI
electromagnetic energy disturbance that manifests itself in performance degradation, malfunction, or failure of electronic equipment

3.1.10
input impedance
complex quantity including the capacitive reactance and inductive reactance as well as resistance expressed in ohms measured at a specified frequency and level at the input terminals of the device

3.1.11
lead
ℓ
distance that a translating load will travel in reaction to exactly one revolution of its ballscrew or leadscrew

3.1.12
moment of inertia
J
property of matter that causes the mass to resist any change in its motion

3.1.13
motion control system
all rotational and linear electric servo and stepping motors and their feedback devices and controls intended for use in a system that provides precise positioning, or speed control, or torque control, or in any combination thereof

Copyright National Electrical Manufacturers Association
Provided by IHS under license with NEMA
No reproduction or networking permitted without license from IHS
Not for Resale

3.1.14
pitch
p
number of revolutions that a ballscrew or leadscrew must turn to move its translating load exactly one unit of distance

NOTE For single start screws, the pitch is typically the inverse of the lead (i.e. $p = 1/\ell$).

3.1.15
power dissipation
P_d
power loss in any device due to energy expended

NOTE Power dissipation is calculated by the formula

$$P_d = P_{in} - P_{out}$$

where

P_{in} is the input power;

P_{out} is the output power.

3.1.16
thermal resistance
R_{th}
opposition to the flow of heat between adjoining surfaces

3.1.17
rotor
rotating component of a device

3.1.18
Temperature definitions

3.1.18.1
ambient temperature
temperature of the cooling medium, usually air, immediately surrounding the device

3.1.18.2
case temperature
temperature of the surface of a device

3.1.18.3
maximum allowable winding temperature
maximum temperature of the winding permitted by the temperature class of the insulation system used

3.1.18.4
temperature rise
increase in temperature (in ^{o}C) of a device above ambient temperature at designated conditions

--`,,`,,`-`-`,,`,,`,`,,`---

Copyright National Electrical Manufacturers Association
Provided by IHS under license with NEMA
No reproduction or networking permitted without license from IHS
Not for Resale

3.1.19 Time constant definitions

3.1.19.1
electrical time constant

t_e

time required for the current to reach 63.2% of its steady state value when a step input voltage is applied

NOTE Electrical time constant is calculated by the formula

$$t_e = \frac{L}{R}$$

where

L is the winding inductance;

R is the winding resistance.

3.1.19.2
mechanical time constant

t_m

time required for a device to reach 63.2% of its steady state velocity after a zero source impedance step voltage input is applied

NOTE Mechanical time constant is calculated at a specified temperature using the following formula:

$$t_m = \frac{(J)(R_{mt})}{(K_T)(K_E)}$$

where

J is the rotor inertia;

K_E is the counter emf constant;

K_T is the torque constant;

R_{mt} is the motor terminal resistance.

3.1.19.3
thermal time constant

t_{th}

time required for a device to reach 63.2% of steady state temperature rise with constant power dissipation

3.1.20 Torque definitions

NOTE The following definitions are derived from torque — the property which produces, or tends to produce, rotation and is equal to the product of the radius of motion and the perpendicular force.

Copyright National Electrical Manufacturers Association
Provided by IHS under license with NEMA
No reproduction or networking permitted without license from IHS
Not for Resale

3.1.20.1
breakaway torque
starting torque
static friction torque
<general> mechanical resistance that a device must overcome before motion can occur

NOTE Breakaway torque is usually specified at a particular temperature, e.g. 0.1 lb-in at 25º C.

3.1.20.2
coulomb friction torque
resistance to motion that is independent of velocity

NOTE See Figure 1.

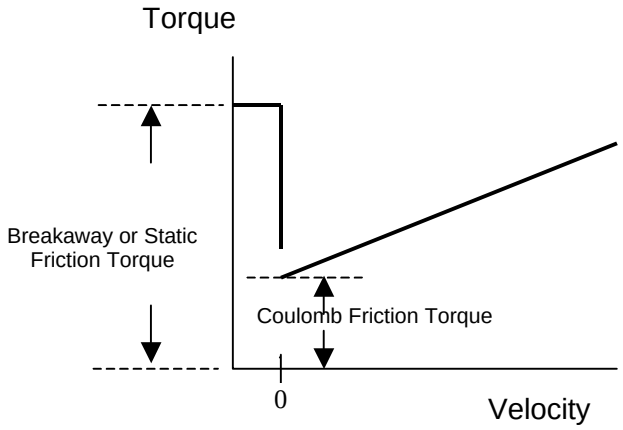

Figure 1 — Friction torque

3.1.20.3
rms torque
T_{rms}
root mean square torque
torque expressed mathematically by the formula

$$T_{rms} = \sqrt{\frac{\sum T_i^2 t_i}{\sum t_i}}$$

where

T_i is the torque applied at period I;

t_i is the time period i.

3.1.20.4
stiffness
<mechanical system> ratio of applied force or torque to change in position

Copyright National Electrical Manufacturers Association
Provided by IHS under license with NEMA
No reproduction or networking permitted without license from IHS
Not for Resale

3.1.20.5
torque ripple
variation of torque within one shaft revolution under specified test conditions, expressed as the ratio of peak-to-peak torque amplitude to average torque (not including cogging torque)

3.1.21
torsional resonance
rotational oscillation that occurs in any rotating system when it is being excited at or near its natural frequency

3.1.22
Velocity definitions

NOTE In industry, velocity is commonly referred to as speed and is expressed in rpm.

3.1.22.1
angular velocity
ø
time rate of change of angular position (f)

NOTE Angular velocity is expressed mathematically as $\frac{df}{dt}$.

3.1.22.2
linear velocity
v
time rate of change of linear position (x)

NOTE Linear velocity is expressed mathematically as $\frac{dx}{dt}$.

3.1.22.3
maximum speed
highest speed at which the shaft can be rotated without mechanical damage

3.2 Terms common to control motors

3.2.1 General terms

3.2.1.1
brush
conducting material which passes current from the d.c. motor terminals to the rotating commutator

3.2.1.2
commutation
mechanical or electronic process of sequentially exciting the windings of a motor such that the relative angle between the magnetic fields of the stator and rotor is maintained within specified limits

--`,,`,,`-`-`,,`,,`,`,,`---

Copyright National Electrical Manufacturers Association
Provided by IHS under license with NEMA
No reproduction or networking permitted without license from IHS
Not for Resale

3.2.1.3
commutation angle
<brush type d.c. motor> angle in electrical degrees that a coil or group of coils on an armature rotate while being commutated

<brushless d.c. motor> angular difference in electrical degrees between the rotor and stator poles when the current is reversed in the windings

3.2.1.4 Current definitions

3.2.1.4.1
continuous current
current required to develop rated torque without exceeding the temperature rating

3.2.1.4.2
continuous stall current
I_{cs}
maximum rms current that can be continuously applied to a stalled motor without exceeding the temperature rating of the motor

3.2.1.4.3
peak current
acceleration current
maximum intermittent current that does not cause motor damage or irreversible degradation of motor performance

3.2.1.4.4
rated current
current developed at rated voltage and rated speed without exceeding the temperature rating

NOTE See 4.3.3.1 for the rated current test procedure for stepping motors.

3.2.1.5
damping coefficient
K_D
zero source impedance of a motor
coefficient calculated at a specified temperature that describes the braking effect in a motor

NOTE Damping coefficient can be defined by the mathematical expression

$$K_D = \frac{(K_E)(K_T)}{\textit{Motor Terminal Resistance}}$$

where

K_E is the back EMF constant;

K_T is the torque constant.

Copyright National Electrical Manufacturers Association
Provided by IHS under license with NEMA
No reproduction or networking permitted without license from IHS
Not for Resale

3.2.1.6 EMF definitions

3.2.1.6.1
back EMF
counter EMF
E_g
internally generated voltage produced by the relative movement between the magnetic field and the armature winding when measured on an open circuit

3.2.1.6.2
voltage constant
back EMF per unit of speed at a specified temperature

3.2.1.7
End play definitions

3.2.1.7.1
axial end play
<control motor> shaft displacement along the shaft axis

3.2.1.7.2
radial end play
shaft displacement perpendicular to the shaft axis

3.2.1.8
horsepower
HP
a measure of motor output power equal to 746 watts

NOTE Horsepower is calculated by the formula

$$HP = \frac{(T)(S)}{1{,}008{,}000}$$

where

S is the speed, in rpm;

T is the torque, in oz-in.

3.2.1.9 Inductance definitions

3.2.1.9.1
inductance
L
the property of a coil or other electric circuit that opposes any change in current

NOTE In a stepping motor or brushless servo motor, the inductance varies with rotor position, excitation current amplitude, and rate of change of current. Thus, when a figure for inductance is given, the conditions under which the measurements are taken shall be specified.

Copyright National Electrical Manufacturers Association
Provided by IHS under license with NEMA
No reproduction or networking permitted without license from IHS
Not for Resale

3.2.1.9.2
armature inductance
L_a
inductance of the armature as measured across the terminals of the device

3.2.1.10
locked rotor
stalled motor
condition where the rotor is held stationary while power is applied to the motor terminals

3.2.1.11
motor terminal resistance
R_{mt}
resistance of the armature winding and, where applicable, of the connections measured at the brush contact points

3.2.1.12 Torque definitions

3.2.1.12.1
cogging torque
cyclic torque in an unenergized motor resulting from the tendency of the rotor and stator to align themselves in a position of minimum magnetic reluctance

3.2.1.12.2
continuous stall torque
T_{cs}
maximum continuous output torque that the motor can develop under a stall condition without the motor exceeding its rated temperature

3.2.1.12.3
peak torque
T_{pk}
maximum torque developed by a motor under specified conditions when the maximum allowable peak current is applied

3.2.1.12.4
rated torque
continuous torque
full load torque
output torque
torque developed at rated voltage and rated speed without exceeding the temperature rating

3.2.1.12.5
torque constant
K_T
the ratio of change in torque to change in current developed by a motor

--`,,`,,`-`-`,,`,,`,`,,`---

Copyright National Electrical Manufacturers Association
Provided by IHS under license with NEMA
No reproduction or networking permitted without license from IHS
Not for Resale

NOTE 1 Torque constant is expressed mathematically as $\frac{DT}{DI}$.

NOTE 2 Torque constant is temperature dependent and can be mathematically derived from the back EMF constant (K_E). For SI (metric) units, $K_T = K_E$. For English units, the following conversions apply:

a) $K_T = K_E/11.834$ for brush commutated or trapezoidal EMF brushless motors;

b) $K_T = K_E/13.017$ for sinusoidal EMF brushless motors with square wave current;

c) $K_T = K_E/13.662$ for sinusoidal EMF brushless motors with sinusoidal current.

The available shaft output torque is the developed torque reduced by frictional and rotational losses.

3.2.1.13 Velocity definitions

NOTE In industry, velocity is commonly referred to as speed and is expressed in rpm.

3.2.1.13.1
cogging
non-uniform velocity

3.2.1.13.2
no load speed
actual motor speed with no external load and specified terminal voltage

3.2.1.13.3
rated speed
continuous speed
maximum motor speed that can be achieved while maintaining a specified rated torque

3.2.2 Terms specific to servo motors

NOTE The following definitions pertain to servo motors. All items relating to measured values are defined with the understanding that in most cases a test procedure will describe the specified conditions of measurement.

3.2.2.1
armature
component of an electro-magnetic machine that contains the windings that conduct the power producing component of current

3.2.2.2
armature reaction
magnetic field produced by the current in the armature coils of an electro-magnetic machine that alters the main magnetic field

3.2.2.3
armature resistance
resistance of the armature winding and, where applicable, the connections measured at the brush contact points

Copyright National Electrical Manufacturers Association
Provided by IHS under license with NEMA
No reproduction or networking permitted without license from IHS
Not for Resale

3.2.2.4
brushless d.c. motor
rotating self-synchronous machine with a permanent magnet rotor and with known rotor shaft positions for electronic commutation

NOTE A motor meets this definition whether the drive electronics are integral with the motor or separate from it.

3.2.2.5
commutator
set of mechanical contacts arranged angularly or linearly, contacted by the brushes to provide the electrical path from the power source to the armature

NOTE The purpose of the commutator is to control the relative electrical phase angle between the fields of the stationary element and the moving element of a motor.

3.2.2.6
demagnetization current
the winding current that creates a magnetic flux opposing the main field flux which irreversibly decreases the field strength of the motor magnets

3.2.2.7
full load operation
continuous operation at the limits of the continuous safe operating area

3.2.2.8
maximum continuous current
the maximum root mean square (rms) current which can be continuously applied to a motor operating at low speed under specified conditions without exceeding the motor's rated temperature

NOTE Low speed is that speed which is sufficient to distribute the heat uniformly throughout the winding. It is typically less than 10 rpm.

3.2.2.9
maximum continuous torque
the maximum continuous output torque which the motor can develop when operating at low speed under specified conditions without exceeding the motor's rated temperature

NOTE Low speed is that speed which is sufficient to distribute the heat uniformly throughout the winding. It is typically less than 10 rpm.

3.2.2.10
maximum theoretical acceleration
Æ
the peak motor torque divided by the rotor inertia

NOTE Maximum theoretical acceleration is mathematically expressed as $\frac{T_{pk}}{J_r}$.

--`,,`,,`-`-`,,`,,`,`,,`---

Copyright National Electrical Manufacturers Association
Provided by IHS under license with NEMA
No reproduction or networking permitted without license from IHS
Not for Resale

3.2.2.11
motor constant
K_M
a figure of merit used to define the ratio of torque produced to the electrical power losses of the motor

NOTE Motor constant is calculated by the formula

$$K_M = \frac{T_C}{\sqrt{\left(I_c^2\right)\left(R_{mt}\right)}}$$

where

I_C is the continuous current;

R_{mt} is the motor terminal resistance;

T_C is the continuous torque.

3.2.2.12
no-load current
the current drawn by an unloaded motor at the rated voltage

3.2.2.13
power amplifier duty cycle rating
the amplifier output rating when a motor is operated in intermittent duty

NOTE This rating is generally expressed as a function of both the percentage on-time to total cycle time (duty cycle) and the absolute on-time in seconds. See Figure 2 as an example.

Copyright National Electrical Manufacturers Association
Provided by IHS under license with NEMA
No reproduction or networking permitted without license from IHS
Not for Resale

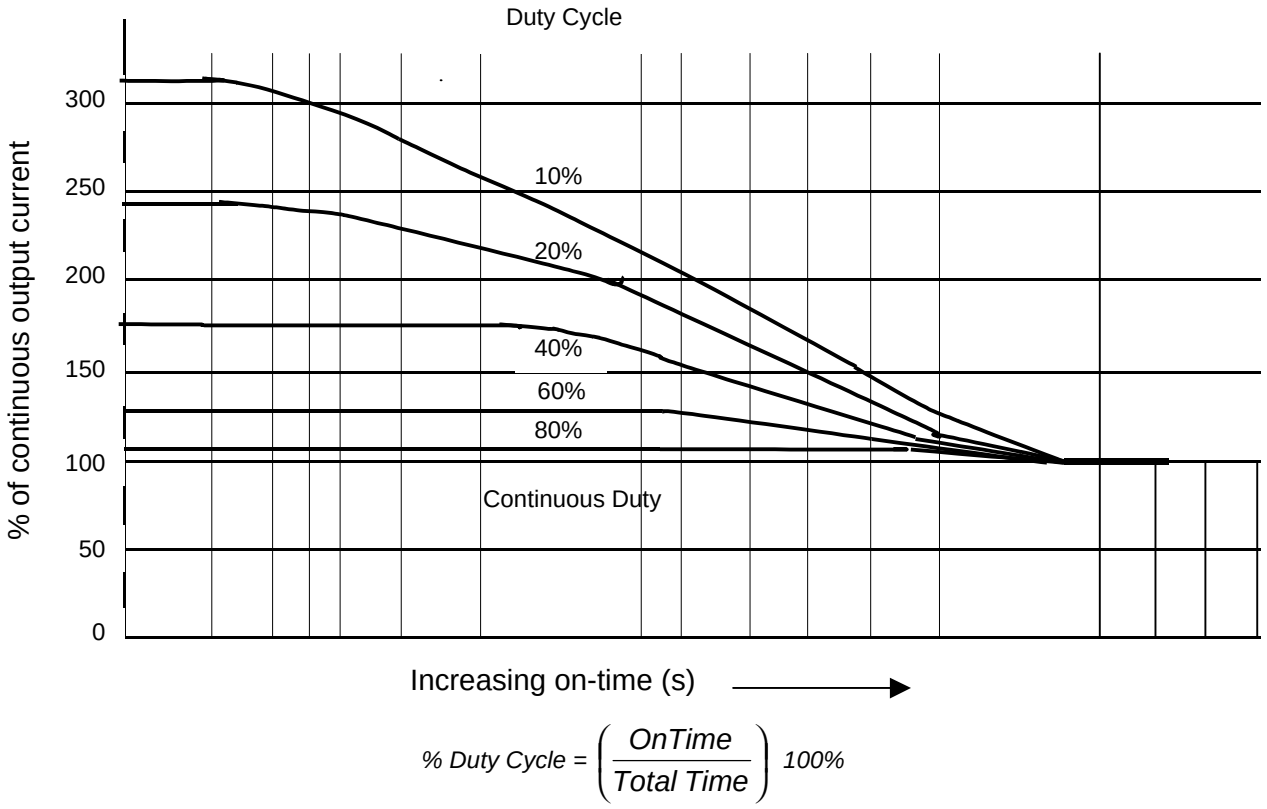

Figure 2 — Duty cycle curves

3.2.2.14
safe operating area
area defined by speed and torque conditions at which the motor will operate within its thermal limitations, centrifugal force limitations, and within its commutation capability, where applicable

3.2.2.15
servo mechanism
control system that employs feedback in order to control a desired output such as speed or position

NOTE A servo mechanism will detect and attempt to correct deviations from the desired output.

3.2.2.16
slip
<induction servo motors> the difference in speed between the applied rotating field and the rotor speed

NOTE Slip is usually expressed as a percentage of the synchronous speed.

Copyright National Electrical Manufacturers Association
Provided by IHS under license with NEMA
No reproduction or networking permitted without license from IHS
Not for Resale

3.2.2.17
temperature coefficient of torque
coefficient that defines the change in torque constant of the motor per unit change in motor average winding temperature

3.2.2.18
viscous damping at infinite impedance source
viscous damping factor
D_V
measure of the rotational losses in torque that are approximately directly proportional to speed

NOTE Viscous damping at infinite impedance source is expressed mathematically as $\frac{DT}{Dw}$.

3.2.2.19
viscous torque
dynamic friction torque
the resistance to motion that is velocity dependent

NOTE Viscous torque is the slope of the curve shown in Figure 1.

3.2.3 Terms specific to stepping motors

3.2.3.1
dynamic load angle
angle between the loaded and unloaded position (theoretical zero) of the rotor at a given instant under otherwise identical conditions at a specified command pulse rate, mode of winding excitation, and phase current

3.2.3.2
eddy current equivalent resistance
virtual resistor, placed in parallel with each phase winding, to represent the motor losses due to eddy currents flowing in the magnetic structure

NOTE Eddy currents flow when flux changes occur in the magnetic structure of the motor. This happens not just in the stator, but also in the rotor, and any magnets present in the structure. Their effects can be noticed when a large step voltage to a phase winding is applied: the resulting current initially makes a small jump, with the rate of change of the current not limited by the winding inductance. Eddy currents in stepping motors cause high torque losses. At high motor speeds (over 1500 rpm), they are the dominant cause of motor heating. Most effects can be modeled by assuming the presence of a virtual resistor, in parallel with each phase winding. Eddy currents occur at various levels throughout the motor structure.

3.2.3.3
large signal inductance
L_{LS}
inductance of a phase winding, measured at rated current, averaged over one electrical cycle

NOTE Measurement of the inductance of phase A, at the approximately rated winding current I_A, results in values that closely follow the formula

$$L_{LS,A} = L - \frac{(NC)(I_A)}{(PC)|I_A|} \cos PCf$$

Copyright National Electrical Manufacturers Association
Provided by IHS under license with NEMA
No reproduction or networking permitted without license from IHS
Not for Resale

where

I_A is the current for phase A;

L is the average large signal inductance (a constant);

$L_{LS,A}$ is the instantaneous large signal inductance of phase A;

PC is the pole count of the motor;

NC is the saturation term (see 3.2.3.20.3.1);

Ö is the position of the rotor relative to the stator.

The instantaneous inductance value $L_{LS,A}$ is a constant L, with the addition of a cyclic, position-dependent term. The value of the constant L can be measured by holding the cyclic term at zero. The current in the other phase(s) can be used to position the motor at a point where PC equals 0. Apply a high voltage to phase A. The rate of change of the current at approximately the rated current is used to calculate the large signal inductance L_{LS}. The average value of L_{LS} can also be found by back-driving the motor at high speed, measuring the EMF, and then short circuiting the winding and measuring the resulting short circuit current. There is a good correlation between the results of these two methods. They show a significant difference with the value obtained from a low voltage, high frequency measurement with an inductance bridge.

3.2.3.4
mechanical hysteresis
angle between the unloaded stable equilibrium point when approached from one direction and the unloaded stable equilibrium point (of the same step position or minimum reluctance position) when approached from the opposite direction

3.2.3.5
motor phase
set of electrically excited stator poles, consisting of one or more pairs of oppositely polarized poles

NOTE A bifilar wound set of poles constitutes one motor phase, not two, in which the windings are linked magnetically, as one set of poles.

3.2.3.6
overshoot
transient
peak angular distance the shaft of the motor rotates beyond the actual final position

NOTE See Figure 3.

--`,,`,,`-`-`,,`,,`,`,,`---

Copyright National Electrical Manufacturers Association
Provided by IHS under license with NEMA
No reproduction or networking permitted without license from IHS
Not for Resale

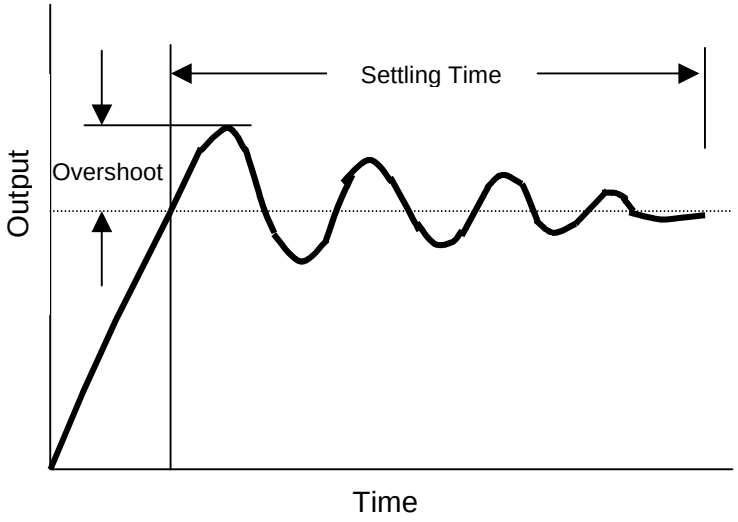

Figure 3 — Overshoot and settling time

3.2.3.7
phase resistance
internal winding resistance that is equal to the motor terminal resistance less the lead resistance

3.2.3.8
positional error
absolute accuracy
deviation from the theoretically correct angular position of any step position in a complete revolution

NOTE The zero position used in determining the theoretically correct angular position shall be the midpoint between the two extremes of position error. It is expressed as an angular measurement or a percentage of the nominal full step. It is measured under specified conditions.

3.2.3.10
settling time
total time from the first arrival at the commanded position until the amplitude of the oscillatory motion of the rotor has diminished to a specified level under specified conditions

NOTE See Figure 3.

3.2.3.11
single step response
response to a single step command that includes single step time, overshoot, and settling time

NOTE 1 The single step response will be controller dependent.

NOTE 2 See Figure 4.

Copyright National Electrical Manufacturers Association
Provided by IHS under license with NEMA
No reproduction or networking permitted without license from IHS
Not for Resale

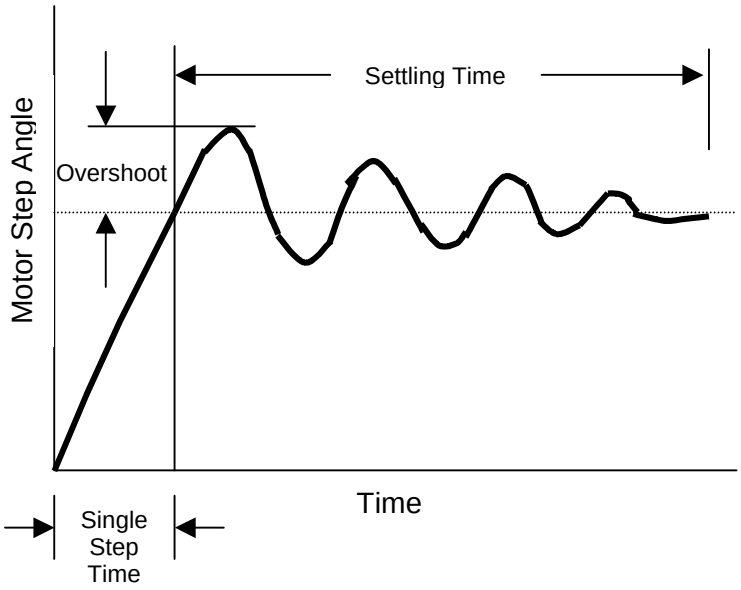

Figure 4 — Single-step response

3.2.3.12
single step time
time required for the motor shaft to initially reach its next rest position when commanded to take a single step

3.2.3.13
static load angle
angle through which the rotor is displaced from its energized stable equilibrium position by a given applied torque at a specified current

3.2.3.14
Step angle definitions

3.2.3.14.1
full-step
basic step angle
rated angular increment of rotor position, at no load, between any two adjacent stable equilibrium points when the phases are energized singly and in sequence.

NOTE A full step is always associated with the same number of phases energized for each step in the sequence. The rated angular increment of rotor position of a hybrid stepping motor is calculated by the formula

$$f = \frac{360}{(A)(B)(C)}$$

Copyright National Electrical Manufacturers Association
Provided by IHS under license with NEMA
No reproduction or networking permitted without license from IHS
Not for Resale

where

A is the number of stator pole pairs per phase;

B is the number of phases;

C is the number of north/south pairs of rotor salients, but never less than "*A*";

f is the angular displacement.

3.2.3.14.2
half-step
same as full step except that alternate "1-on," "2-on" energization is used resulting in an angular increment of motion of one-half that of a full-step

3.2.3.14.3
micro-step
mini-step
subdivision of a full-step into some finer increment than the half-step, by profiling the phase currents in accordance with a predetermined law

3.2.3.14.4
step angle error
incremental step accuracy
maximum plus or minus deviation from the rated incremental angular motion per step for any adjacent steps in a complete revolution without reversing direction under specified conditions

NOTE Step angle error is expressed as a percent of the angle of the nominal step.

3.2.3.14.5
step position
static angular position that the shaft of an unloaded stepping motor assumes when it is energized as specified

3.2.3.14.6
step sequence
sequence of excitation defined by the translator logic that is the repeatable cyclic pattern by which the windings are energized for unidirectional motion

3.2.3.15 Step rate definitions

3.2.3.15.1
maximum step rate
maximum slew pulse rate
the maximum pulse rate at which the unloaded stepping motor can remain in synchronism with the command pulses under the specified drive conditions

Copyright National Electrical Manufacturers Association
Provided by IHS under license with NEMA
No reproduction or networking permitted without license from IHS
Not for Resale

3.2.3.15.2
pull-in step rate
error free stop/start
maximum command pulse rate (constant) under specified conditions at which the energized stepping motor can accelerate an applied load from standstill to synchronism with the command pulse rate without missing steps

3.2.3.15.3
pull-out step rate
maximum command pulse rate (constant) under specified conditions at which the energized stepping motor can run in synchronism with the command pulse rate

3.2.3.15.4
resonant step rate
step rate under specified conditions at which the motor will miss steps when operating at the primary resonance point

3.2.3.15.5
stepping rate
number of step angles through which the stepping motor rotates in a specified time

3.2.3.16 Stepping motor type definitions

3.2.3.16.1
hybrid stepping motor
HY stepping motor
motor utilizing a permanent magnet to polarize soft iron pole pieces

3.2.3.16.2
permanent magnet stepping motor
PM stepping motor
motor utilizing a rotor that has permanently magnetized poles

3.2.3.16.3
stepping motor
polyphase synchronous motor, the rotor of which rotates in discrete angular increments when the stator windings thereof are energized in a programmed manner either by appropriately timed direct current states or by a polyphase alternating current

NOTE Rotation occurs because of the magnetic interaction between the rotor poles and the poles of the sequentially energized stator phases.

3.2.3.16.4
variable reluctance stepping motor
VR stepping motor
motor utilizing a rotor that has pole salients (soft iron) without magnetic bias in the de-energized state

3.2.3.17
steps per revolution
number of discrete steps for one motor revolution

Copyright National Electrical Manufacturers Association
Provided by IHS under license with NEMA
No reproduction or networking permitted without license from IHS
Not for Resale

3.2.3.18
synchronism
state that exists when the average speed of the rotor equals the command pulse rate multiplied by a constant determined by the number of full steps per revolution

3.2.3.20 Torque definitions

3.2.3.20.1
bias torque
offset torque caused by the non-orthogonal errors between phase A and phase B when the stepping motor is energized in a one phase "on" mode

3.2.3.20.2
detent torque
value of applied torque required to cause rotation between subsequent equilibrium positions over one complete revolution of an open-circuited motor

NOTE Minimum detent torque is the lowest value of torque as described above; maximum detent torque is the highest value.

3.2.3.20.3
Electromagnetic torque in a hybrid stepping motor

NOTE Experimental data has suggested that the electromagnetic torque of one phase of a hybrid stepping motor can be accurately described by the product of the these three terms:

a) the phase current, $I_{Ö}$;

b) the effective torque constant, expressed as $\left(K_T - \frac{N_C}{2} \left| I_f \right| \right)$;

c) the position term, expressed as $-(\sin Nf + h_3 \sin 3Nf + h_5 \sin 5Nf + ...)$.

Then, the electromagnetic torque for phase A would be

$$T_A = -I_A \left(K_T - \frac{N_C}{2} \left| I_A \right| \right) \left(\sin Nf + h_3 \sin 3Nf + h_5 \sin 5Nf + ... \right)$$

where

h_3 is the third harmonic term (see 3.2.3.20.3.2);

h_5 is the fifth harmonic term (see 3.2.3.20.3.2);

I_A is the current for phase A;

K_T is the torque constant (see 3.2.1.12.5);

N is the pole count of the motor;

N_C is the saturation term (see 3.2.3.20.3.1);

Ö is the position of the rotor relative to the stator.

Similar equations can be written for the other phase(s) of the motor. In those equations, a position offset is added to the position term.

Copyright National Electrical Manufacturers Association
Provided by IHS under license with NEMA
No reproduction or networking permitted without license from IHS
Not for Resale

3.2.3.20.3.1
saturation term
N_C
description of the effect of the winding current, regardless of polarity, on the effective torque constant in the electromagnetic torque of a phase

3.2.3.20.3.2
harmonic term
h
description of the harmonic component of the position term in the electromagnetic torque of any phase

NOTE The subscript with the symbol *h* represents the specific term, e.g. h_3 denotes the third harmonic, h_5 is the fifth harmonic, etc.

3.2.3.20.4
holding torque
peak resistance to rotation of a gradually rotated shaft of an energized motor for a specified mode of winding excitation and applied current

NOTE The torque is considered “positive” when the rotor resists rotation of the shaft by an externally applied torque, and “negative” when it requires the external torque to retard the shaft.

3.2.3.20.5
hysteresis torque
torque that generally opposes the motion of the motor and is caused by hysteresis in the magnetic structure of the motor

NOTE When a stepping motor is back-driven at a very low speed with the phase windings open circuited, a small average positive torque, in addition to the cyclic fourth harmonic detent torque and the first harmonic bias torque, is needed to drive the motor in the clockwise direction. A small negative torque is needed for rotation in the counter-clockwise direction. Upon reversal of the direction of motion, hysteresis torque reverses in approximately 90° electrical. Hysteresis torque may be accompanied by bearing friction torque that behaves more like coulomb friction, reversing virtually immediately when the motion direction is reversed.

3.2.3.20.4
pull-in torque
maximum coulomb friction torque at which the energized motor will accelerate from zero speed to the command pulse step rate and run in synchronism with the command pulse rate without losing steps under specified conditions

3.2.3.20.5
pull-out torque
maximum coulomb friction torque that the motor will overcome while running in synchronism with a command pulse rate without losing steps

3.2.3.20.6
stiffness
torque gradient
<stepping motor> derivative (slope) of the torque versus angle curve at the stable equilibrium point

NOTE The curve is the sum of the stiffness due to holding torque and detent torque.

Copyright National Electrical Manufacturers Association
Provided by IHS under license with NEMA
No reproduction or networking permitted without license from IHS
Not for Resale

3.2.3.21
velocity modulation
periodic function superimposed on the average angular velocity

NOTE The peak-to-peak amplitude is expressed as a percent of the mean velocity.

3.3 Terms common to feedback devices

3.3.1 General terms

3.3.1.1
accuracy
extent to which the output electrical signals represent exact mechanical shaft position

3.3.1.2
axial end play
<feedback device> variation in shaft end surface position with reference to the feedback device mounting surface when a specified axial load is applied in each direction

3.3.1.3
axial load
force applied to a shaft end surface directed along the axis of rotation

3.3.1.4
binary-coded decimal
BCD
number-representation system in which each decimal digit is identified by a unique arrangement of binary digits

NOTE Binary-coded decimals are associated with codes of four bits used to define the Arabic numbers 0 through 9.

3.3.1.5
bit
abbreviation for binary digit; the basic unit of the binary system whose value may be either true (one) or false (zero)

3.3.1.6
channel
unique output of the feedback device

3.3.1.7
complementary
two identical periodic signals where one signal is inverted from the other

NOTE Complementary signals may be generated either through the use of multiple sensors or by inversion of the output from a single channel.

EXAMPLE See Figure 5.

Copyright National Electrical Manufacturers Association
Provided by IHS under license with NEMA
No reproduction or networking permitted without license from IHS
Not for Resale

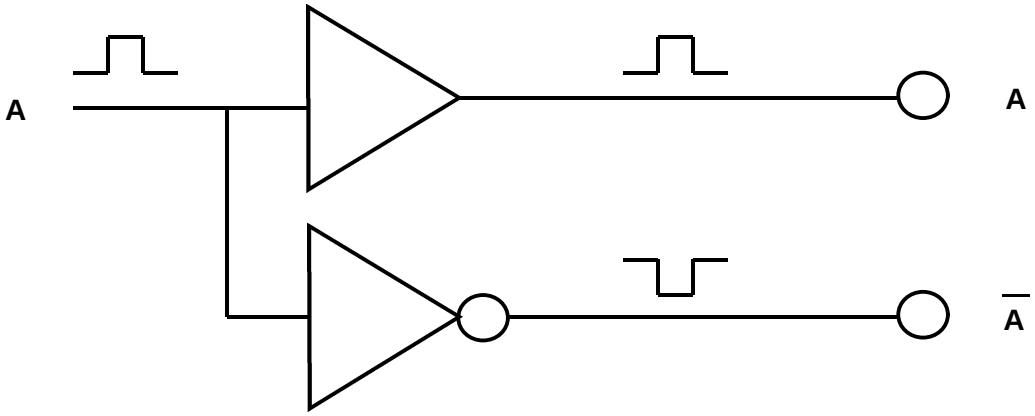

Figure 5 — Single channel complementary output

3.3.1.8
count error
missing transition or an additional transition from the intended coded output

3.3.1.9
count transition
point where the output state changes from "0" to "1" or vice versa

NOTE See Figure 6.

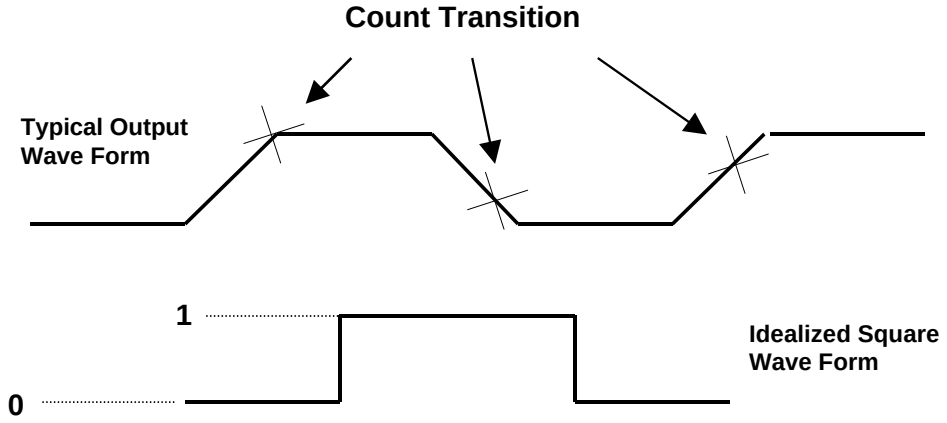

Figure 6 — Count transition

3.3.1.10
cycle error
difference between the actual cycle width and the theoretically correct cycle width

3.3.1.11
cycle width
<square-wave output> the nominal distance from leading edge to next leading edge on the same output channel
<pulse output> the distance between the leading edges of two adjacent pulses

Copyright National Electrical Manufacturers Association
Provided by IHS under license with NEMA
No reproduction or networking permitted without license from IHS
Not for Resale

NOTE 1 See also electrical degree (3.3.2.5).

NOTE 2 With N cycles/rev of square wave output or N pulses/rev of pulse output, cycle width = 1/N rev.

EXAMPLE See Figure 7.

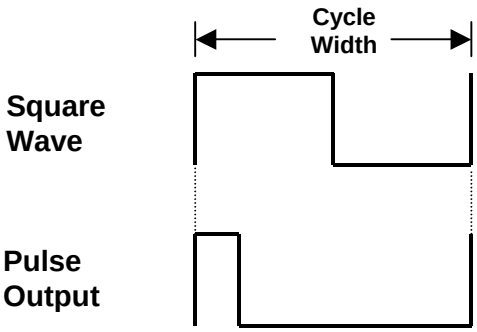

Figure 7 — Cycle width

3.3.1.12
differential output
complementary outputs from a feedback device when the signals are excited by a line driver

NOTE 1 Optimum performance is achieved when the receiver input impedance is matched to the line driver output and transmission line.

NOTE 2 See Figure 8.

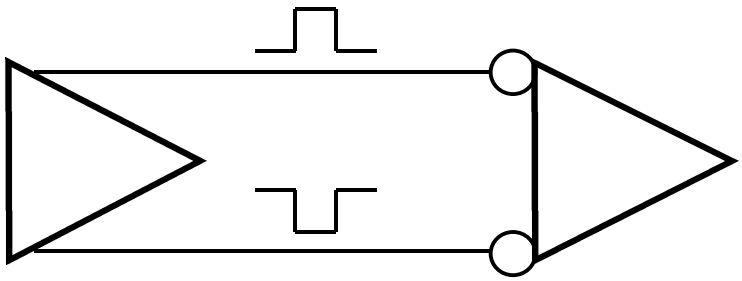

Figure 8 — Differential output

3.3.1.13
direction sensing
technique for determining the direction of motion by analyzing the relative phase relationship between the two channels of quadrature output

3.3.1.14
edge-to-edge separation
edge separation
separation between a transition in the output of channel A and the neighboring transition in the output of channel B

NOTE There are four states per cycle, each nominally 90° electrical for quadrature output.

EXAMPLE See Figure 9.

Copyright National Electrical Manufacturers Association
Provided by IHS under license with NEMA
No reproduction or networking permitted without license from IHS
Not for Resale

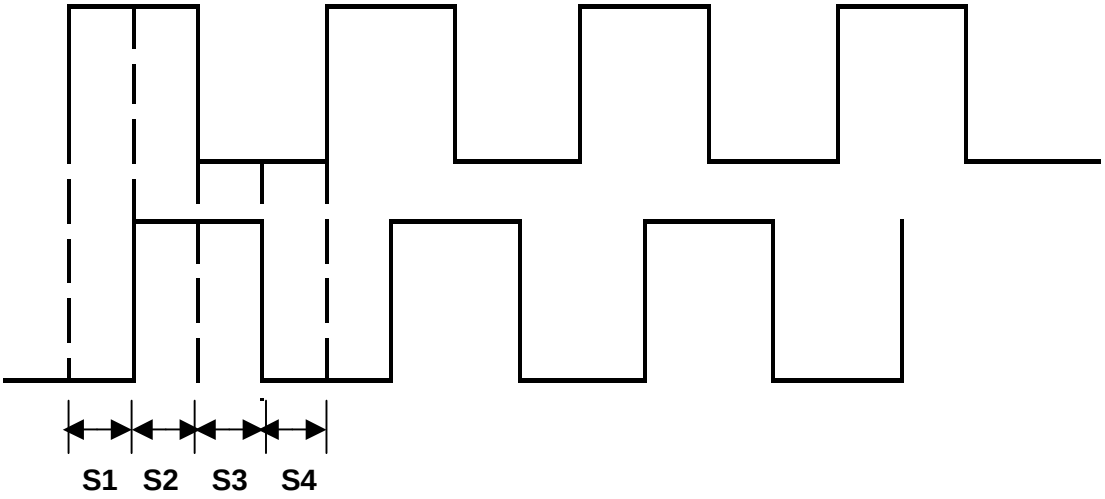

Figure 9 — Edge-to-edge separation

3.3.1.15
excitation
external electrical voltage or current or both applied to a transducer for its proper operation

3.3.1.16
flutter
variation in cycle width from cycle to adjacent cycle

3.3.1.17
frequency response
maximum frequency in cycles per second of the output signals

3.3.1.18
gap tolerance
<bearingless encoder> maximum axial movement of the disk in the air space between the disk and the scanning reticle before the encoder experiences misoperation or damage

3.3.1.19
gray code
cyclic binary code in which there is only one bit transition between successive counts

3.3.1.20
hysteresis
deliberately induced switching error in an electrical circuit to prevent oscillation about a transition point

3.3.1.21
index
separate output signal generated by a special track which produces a single pulse (or transition change) at a unique position or positions

NOTE The index is typically used to identify a center, home position, reset point, or zero reference.

Copyright National Electrical Manufacturers Association
Provided by IHS under license with NEMA
No reproduction or networking permitted without license from IHS
Not for Resale

3.3.1.22
maximum acceleration
<feedback device> maximum rate of speed change which will not mechanically violate the rated performance of the feedback device

NOTE Maximum acceleration is typically expressed in rad/s^2 or in/s^2.

3.3.1.23
maximum axial load
maximum force that may be applied parallel to the shaft axis at a specified point along the shaft without reducing the rated operating life or causing deviation from the rated performance

3.3.1.24
mounting surface perpendicularity
relationship between the shaft centerline about the axis of rotation and the mounting surface of the feedback device

3.3.1.25
multiplication
technique to derive an output resolution higher than the line count

3.3.1.26
natural binary code
code in which each bit of resolution represents a value in base 2

3.3.1.27
phase error
deviation in electrical degrees from a specified phase relationship between any two channels

NOTE The phase relationship is nominally 90°electrical in a quadrature encoder as depicted in Figure 10.

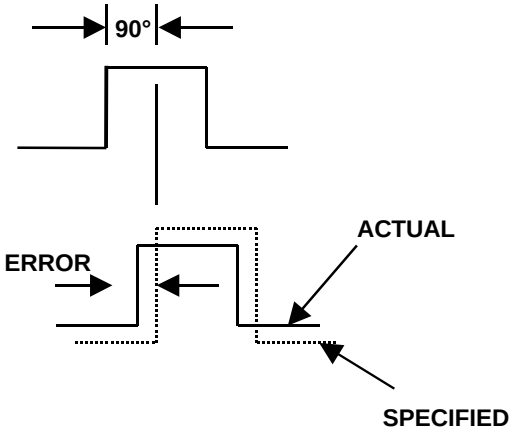

Figure 10 — Phase error

Copyright National Electrical Manufacturers Association
Provided by IHS under license with NEMA
No reproduction or networking permitted without license from IHS
Not for Resale

3.3.1.28
position accuracy
maximum positional difference between the feedback device's true input position and the position indicated by the feedback device’s output

NOTE Accuracy is not to be confused with resolution. See the following specific errors: pulse width error, (3.3.1.30) edge-to-edge separation (3.3.1.14), state width error (3.3.1.3.8), phase error (3.3.1.2.7), position error (3.3.1.2.9), and cycle error (3.3.1.10).

3.3.1.29
position error
difference between the theoretically correct position and the actual position as indicated by the feedback device

NOTE The zero position used in determining the theoretically correct position shall be the midpoint between the two extremes of position error. It is expressed as an angular measurement for a rotary device and a linear measurement for linear devices.

3.3.1.30
pulse width error
deviation in electrical degrees of the pulse width from the ideal value of 180° electrical

NOTE See Figure 11.

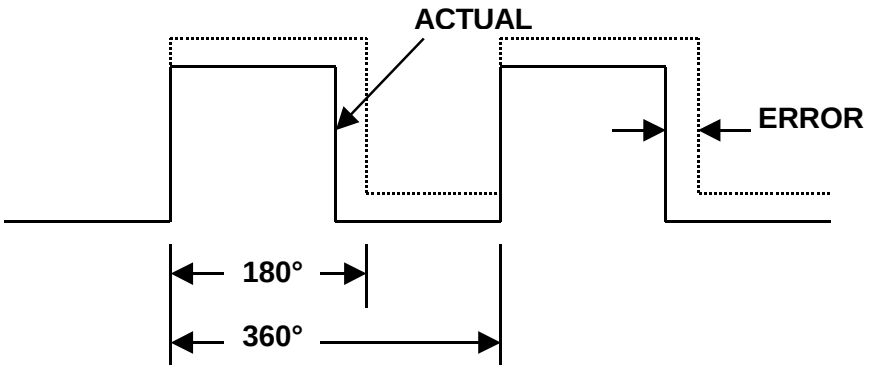

Figure 11 — Pulse width error

Copyright National Electrical Manufacturers Association
Provided by IHS under license with NEMA
No reproduction or networking permitted without license from IHS
Not for Resale

3.3.1.31
quadrature
two identical periodic signals when the phase displacement is nominally 90° electrical

3.3.1.32
quadrature error
deviation from 90° electrical between signals

3.3.1.33
radial load
force applied to the feedback device shaft at a specified point perpendicular to the axis of rotation

3.3.1.34
radial misalignment tolerance
allowable eccentricity caused by the rotating shaft or position of encoder sensors before errors are introduced in the encoder outputs

3.3.1.35
maximum radial load
maximum force that may be applied perpendicular to the shaft axis at a specified point along the shaft without reducing the rated operating life or causing deviation from the rated performance

3.3.1.36
repeatability
ability of a transducer to reproduce output readings when the same input is applied consecutively, under the same conditions, and in the same direction

3.3.1.37
shaft runout
TIR
difference between the maximum reading and the minimum reading of an indicator when probing the shaft surface at a specified point when the shaft is rotated 360°

NOTE 1 In the case of double ended shaft feedback device, the shaft runout for each end shall be specified separately.

NOTE 2 TIR is the acronym for Total Indicator Reading or Total Indicated Runout.

3.3.1.38
state width error
the deviation in electrical degrees of the state width from the ideal value

NOTE 1 The ideal state width is 90° electrical in a quadrature encoder.

NOTE 2 State width error should be specified by the individual manufacturer.

3.3.2 Terms specific to encoders

3.3.2.1
absolute encoder
encoder providing information in the form of unique output for every resolvable position

Copyright National Electrical Manufacturers Association
Provided by IHS under license with NEMA
No reproduction or networking permitted without license from IHS
Not for Resale

3.3.2.2
bi-directional
encoder output code format from which direction of travel can be determined

3.3.2.3
digital tachometer
incremental encoder that is used to indicate or control speed

3.3.2.4
dual channel
encoder producing two unique incremental outputs

3.3.2.5
electrical degree
° electrical
1/360 of a cycle width and is related to mechanical degrees through line count

NOTE An electrical degree is calculated by the formula

$$360^{\circ}\ electrical = \left(\frac{360}{N}\right)^{\circ}\ mechanical$$

where

N is the output cycles/revolution or lines/revolution, whichever is greater.

3.3.2.6
electronic slew speed
maximum speed at which the shaft can rotate and still maintain output signal integrity of the encoder

NOTE This can be calculated in rpm by dividing the maximum output frequency of the encoder by the resolution of the encoder and multiplying by 60.

EXAMPLE 200 kHz maximum output frequency / (1000 pulses/revolution x 60 s/min) = 12000 rpm.

3.3.2.7
encoder
electro-mechanical device that translates mechanical motion (such as position, velocity, and acceleration) into electrical signals

3.3.2.8
frequency
<rotary encoder> speed in revolutions per minute times the resolution (lines per turn) divided by 60

3.3.2.9
frequency modulation
the deviation from a theoretically correct output frequency when the input shaft is rotated at a constant velocity

--`,,`,,`-`-`,,`,,`,`,,`---

Copyright National Electrical Manufacturers Association
Provided by IHS under license with NEMA
No reproduction or networking permitted without license from IHS
Not for Resale

3.3.2.10
incremental encoder
rotary pulse generator
RPG
device providing a series of periodic signals due to mechanical motion

NOTE The number of successive cycles (signals) corresponds to the resolvable mechanical increments of motion.

3.3.2.11
incremental line count
<rotary encoders> number of equally spaced radial lines per revolution
<linear encoders> number of equally spaced lines per specified length

3.3.2.12
jitter
the combined effect of cycle error, state width error, phase error, and symmetry

NOTE See Figure 12.

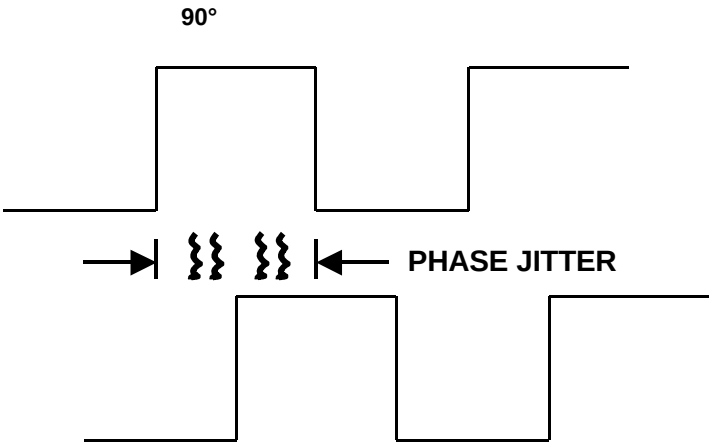

Figure 12 — Jitter

3.3.2.13
line driver
differential interface device designed for digital data transmission over balanced lines by twisted pair or parallel-wire transmission lines

3.3.2.14
mechanical slew speed
maximum speed at which the shaft can be rotated without mechanical damage to the encoder

3.3.2.15
open collector
complementary or single ended interface device or circuit which requires external resistors to produce output signals

NOTE Open collectors can be supplied with internal pull-up resistors.

Copyright National Electrical Manufacturers Association
Provided by IHS under license with NEMA
No reproduction or networking permitted without license from IHS
Not for Resale

3.3.2.16
phase
electrical degrees of displacement between two encoder outputs, typically 90° electrical in quadrature encoders

3.3.2.17
pulse
"on" portion of each output cycle in an encoder with quadrature square wave output; in an encoder with pulse output, electrical circuitry generates short-duration, direction-sensed pulses whose positions correspond to selected square wave transitions (1, 2, or 4 per output cycle), and whose duration is a fixed time, independent of speed

NOTE See Table 1 and Figure 13.

Table 1 — Pulse

	Square Wave Output	**Pulse Output**
Terminology	Preferred unit of resolution is "cycles/ rev," although "pulses/rev" is common. "Quadrature" refers to 90º electrical phase relationship.	Unit of resolution is "pulses/rev" "Quadrature" has no meaning with pulse output.
Duration of ON state	A function of position. If the encoder generates N cycles/rev, ON duration is nominally 1/2N rev.	A function of time. ON duration is t µs (specified by the manufacturer), regardless of speed or resolution. With N pulses/rev, interval between pulses is 1/N rev.
Output Lines	Two lines, both always active. User determines direction of travel by analyzing whether channel A leads or lags channel B.	Two lines, one for each direction. Pulses occur on only one line at a time; the other remains low. Alternatively, one line will be high or low, depending on direction, while the data pulses always appear on the other line.

Copyright National Electrical Manufacturers Association
Provided by IHS under license with NEMA
No reproduction or networking permitted without license from IHS
Not for Resale

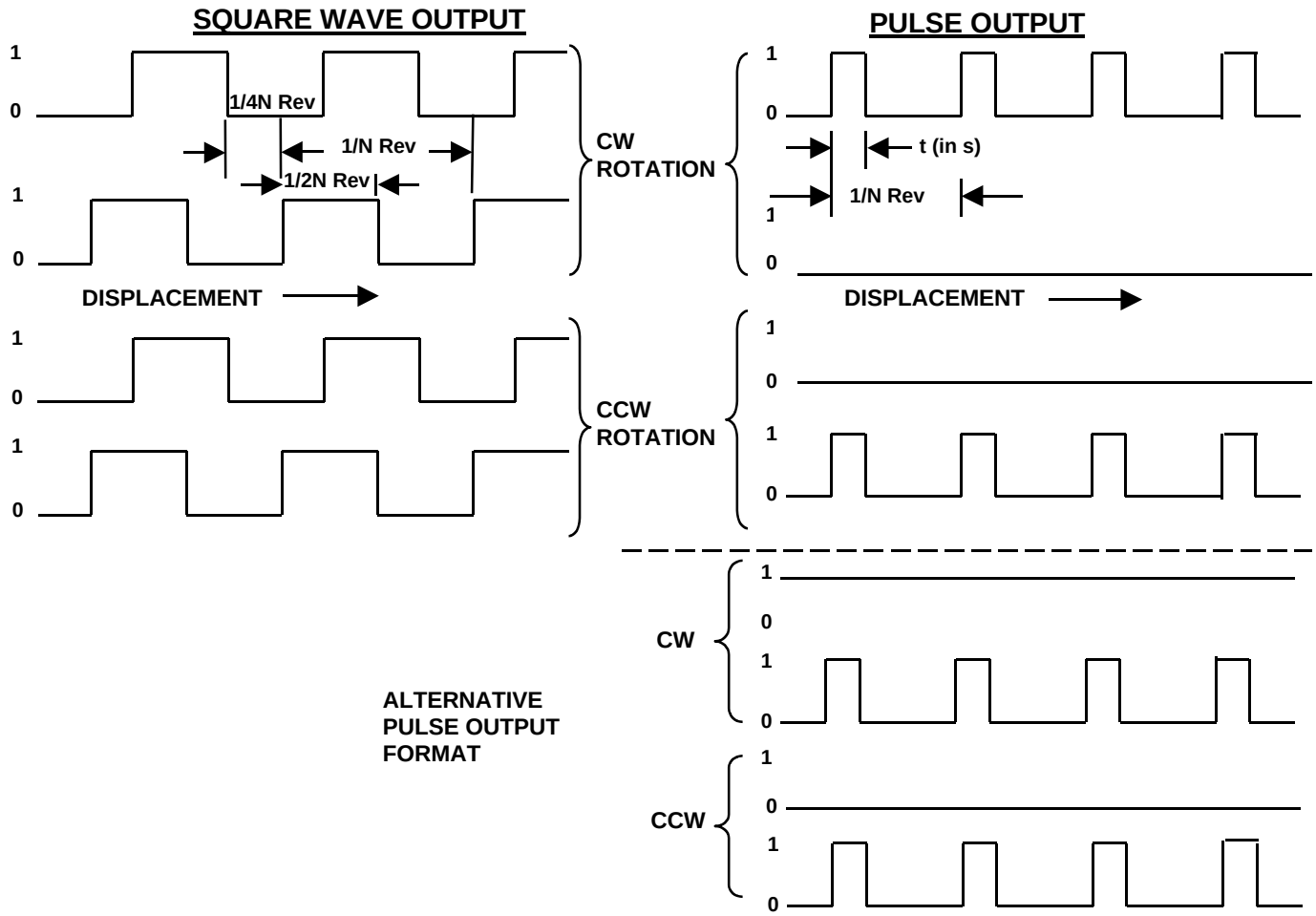

Figure 13 — Pulse

3.3.2.18
resolution
available number of increments per turn for rotary encoders, or per mm or inch for linear encoders

NOTE 1 Resolution is theoretically unrelated to accuracy. Resolution is typically specified in either counts per unit motion (e.g., pulses per revolution, cycles per revolution, counts per revolution, lines per inch (millimeter), bits per turn, or bits per inch (millimeter) or motion per count (e.g., .01°, .0005 in., .001 mm, or 30 arc sec).

NOTE 2 Although "pulses per revolution" is commonly used throughout the industry to specify resolution, the preferred term is "cycles per revolution."

3.3.2.19
single channel
encoder producing one incremental output

3.3.2.20
symmetry
<incremental encoders> ratio of the "on" time to the "off" time of the output signal

NOTE This ratio is optimally 50:50, i.e., 180° electrical "on" and 180° electrical "off."

--`,,`-`-`,,`,,`,`,,`---
Copyright National Electrical Manufacturers Association
Provided by IHS under license with NEMA
No reproduction or networking permitted without license from IHS
Not for Resale

3.3.2.21 Torque definitions

3.3.2.21.1
running torque
rotary force required to keep an encoder shaft turning, typically expressed in oz-in.

3.3.2.21.2
starting torque
breakaway torque
<encoder> rotary force required to overcome static friction and cause the encoder shaft to begin rotating

3.3.2.22
TTL compatible
voltage comparator or similar circuit which provides transistor-transistor logic output levels

3.3.3 Terms specific to resolvers

NOTE The following terms and definitions apply to brushless type resolvers.

3.3.3.1
accuracy ripple
component of resolver accuracy which is caused by third or higher harmonics of the excitation frequency

3.3.3.2
digital analyzing voltmeter
DAV
a.c. measurement and analysis device that allows phase angle voltmeter component measurement as well as accurate measurement of ratio, total harmonic distortion, frequency, and harmonics

3.3.3.3
dividing head
mechanical device to precisely position the shaft of a resolver

3.3.3.4
electrical error
resolver accuracy
difference between the electrical angle, as indicated by the output voltages, and the mechanical angle or rotor position angle

3.3.3.5
frameless resolver
pancake resolver
separate rotor and stator assembly, which is mounted directly in the user's system

3.3.3.6
housed resolver
resolver mounted in a housing and shaft configuration that includes a set of ball bearings

Copyright National Electrical Manufacturers Association
Provided by IHS under license with NEMA
No reproduction or networking permitted without license from IHS
Not for Resale

3.3.3.7 Impedance definitions

3.3.3.7.1
Zro
rotor impedance, measured with stator open circuit

3.3.3.7.2
Zrs
rotor impedance, measured with stator short circuit

3.3.3.7.3
Zso
stator impedance, measured with rotor open circuit

3.3.3.7.4
Zss
stator impedance, measured with rotor short circuit

3.3.3.8
multi-speed resolver
resolver that produces for one mechanical revolution of the rotor “N” sine and “N” cosine waveforms at the output windings

NOTE “N” is the speed which is equivalent to the number of pole pairs.

3.3.3.9
multi-turn resolver
resolver that both determines the absolute position within one revolution and counts the number of revolutions

3.3.3.10
null voltage
residual voltage remaining when the in-phase component of the output voltage is set at zero

NOTE The total null voltage is the sum of the quadrature fundamental null voltage plus the harmonics.

3.3.3.11
phase shift
difference between the time phases of the input and the output voltages when the output is at maximum coupling

3.3.3.12
pole pair
two poles of a resolver

3.3.3.13
primary windings
primary side
windings that receive excitation from a power supply

Copyright National Electrical Manufacturers Association
Provided by IHS under license with NEMA
No reproduction or networking permitted without license from IHS
Not for Resale

3.3.3.14
resolver
electromechanical rotary transformer that relates an angular position of the shaft to electrical voltages; device with a two phase rotor and two phase stator that creates or receives sine-cosine signals

3.3.3.15
resolver bridge
nulling type device that measures, in connection with a PAV (phase angle voltmeter) or DAV (digital analyzing voltmeter), directly and accurately the electrical angular output of a resolver

3.3.3.16
secondary windings
secondary side
output windings, configured to provide sine-cosine signals, which are inductively coupled to a primary winding

3.3.3.17
single-speed resolver
resolver that produces for one mechanical revolution of the rotor one sine and one cosine waveform at the output windings

3.3.3.18
transformation ratio
ratio of the in-phase component of the output voltage, at maximum coupling, to input voltage

3.4 Terms common to control systems

3.4.1 General terms

3.4.1.1
continuous power output
steady state power output capability of a device in watts

3.4.1.2
drift
undesired, but relatively slow, change in output over a period of time with a fixed reference input

3.4.1.3
dynamic braking
technique to reduce speed, or maintain speed, in the case of an overhauling load, upon loss of power or on demand

NOTE This is done by dissipating energy within the motor or in an external resistor.

3.4.1.4
pulse width frequency modulated amplifier
amplifier that switches the supply voltage at a variable frequency or a variable pulse width or both so that an adjustable average voltage or current to the load is established

Copyright National Electrical Manufacturers Association
Provided by IHS under license with NEMA
No reproduction or networking permitted without license from IHS
Not for Resale

3.4.1.5
pulse width modulated amplifier
amplifier that switches the supply voltage at a constant frequency but with a variable pulse width so that an adjustable average voltage or current to the load is established

NOTE The peak voltage can be many times higher than the adjustable average voltage.

3.4.1.6
radio frequency interference
RFI
term used interchangeably with EMI, which is a more recent definition that includes the entire electromagnetic spectrum, whereas RFI is more restricted to the radio-frequency band, generally considered to be between 10 KHz and 10 GHz

3.4.1.7
ripple current
peak-to-peak variation in current around the average value

3.4.1.8
step response
time domain response characteristic of the output of a device in response to a specified step level of input

3.4.1.9
switching frequency
fundamental frequency at which a power switching device controlling the motor current is turned on and off

3.4.2 Terms specific to servo motor controls

3.4.2.1 Servo motor control system component definitions

NOTE The terms and definitions in this subclause pertain to the components of a servo motor motion/position control system as shown in Figure 14.

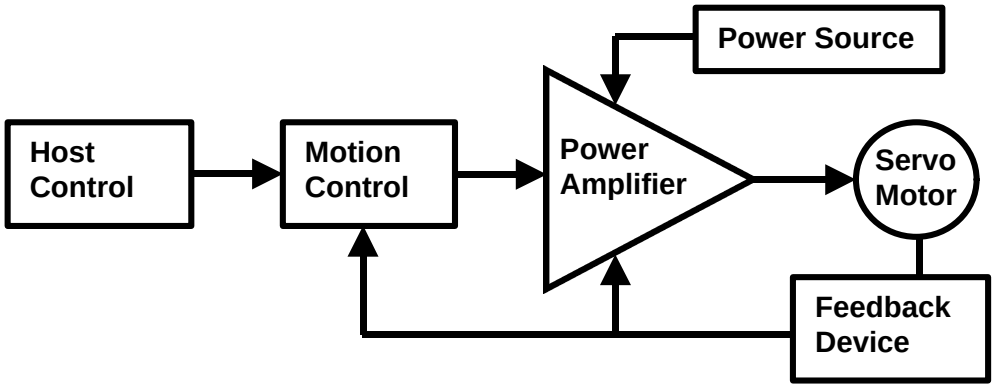

Figure 14 — Servo motor motion control system: example configuration

Copyright National Electrical Manufacturers Association
Provided by IHS under license with NEMA
No reproduction or networking permitted without license from IHS
Not for Resale

3.4.2.1.1
host control
device attached to a network to interface servo motor motion control systems with a machine or factory automation system

NOTE The host control could be also used to preprogram the motion system for independent operation.

3.4.2.1.2
power amplifier
device that enables an input signal to control the flow of necessary power from the power source to the servo motor for the purpose of performing desired motion

3.4.2.1.3
power source
device that provides necessary electrical energy to the power amplifier

NOTE The power source could be a battery, direct a.c. line, or rectified a.c. with or without a transformer. Any excess electrical energy could be dissipated inside the power source or could be regenerated to the prime source.

3.4.2.1.4
servo motor
electric motor that employs feedback and that has a purpose of producing mechanical power to perform the desired motion of the servo mechanism

3.4.2.1.5
servo motor motion controller
control system that provides the various inputs to the power amplifier so that the servo motor performs desired motion within an acceptable range of values

NOTE The controlled values are typically position, velocity, torque, or other servo motor parameters. Often each parameter has its own control loop with independent feedback device. In some systems feedback information is calculated inside the motion controller.

3.4.2.2
deadband
range of input signals for which there is no system response

3.4.2.3
linearity
measure of the degree to which the output of a control device maintains a constant relationship to the input over a range of input values

3.4.2.4
position loop bandwidth
frequency range over which the magnitude of the closed position loop gains decreases by 3 dB or less (the position loop response time decreases as the bandwidth is increased)

3.4.2.5
regeneration
process of returning energy to the source from the load

Copyright National Electrical Manufacturers Association
Provided by IHS under license with NEMA
No reproduction or networking permitted without license from IHS
Not for Resale

3.4.2.6
regenerative capacity
amount of energy that the amplifier can accept during regeneration

3.4.2.7
scale factor of the amplifier
output change for a given input change

3.4.2.8
six-step brushless motor amplifier
amplifier which provides polyphase outputs consisting of six discrete switching states occurring for each 360° electrical cycle

3.4.2.9
slewing
rapid transition of the output of a control device from one value to another value without requiring that the normal output versus input relationship be maintained through the intermediate values

3.4.2.10
small signal bandwidth
bandwidth measured with the signal magnitude low enough to ensure the control system is operating in its linear range

3.4.2.11
three-phase sinusoidal brushless motor amplifier
amplifier that provides three sinusoidal current outputs, phase shifted 120° electrical

3.4.2.12
velocity loop bandwith
frequency range over which the magnitude of the closed loop gain first decreases by no more than 3 db, the peaking is less than 3 db, and the phase shift has not exceeded -90 degrees

NOTE In closed position loop systems, phase shift is frequently specified at -45 degrees to provide additional phase margin and improve stability.

3.4.3 Terms specific to stepping motor controls

3.4.3.1 Stepping motor control system components

NOTE 1 The definitions in this subclause pertain to controls for stepping motors. All terms relating to measured values are defined with the understanding that in most cases a test procedure will describe the specified conditions of measurement.

NOTE 2 The stepping motor system includes all of the various elements necessary to create precision motion. This includes storage and limited intelligence to accommodate short or repetitive motion, or both. Access to greater intelligence for more complex motion control, status reporting, and systems interaction are provided through various interfaces as shown in Figure 15.

--`,,`,,`-`-`,,`,,`,`,,`---

Copyright National Electrical Manufacturers Association
Provided by IHS under license with NEMA
No reproduction or networking permitted without license from IHS
Not for Resale

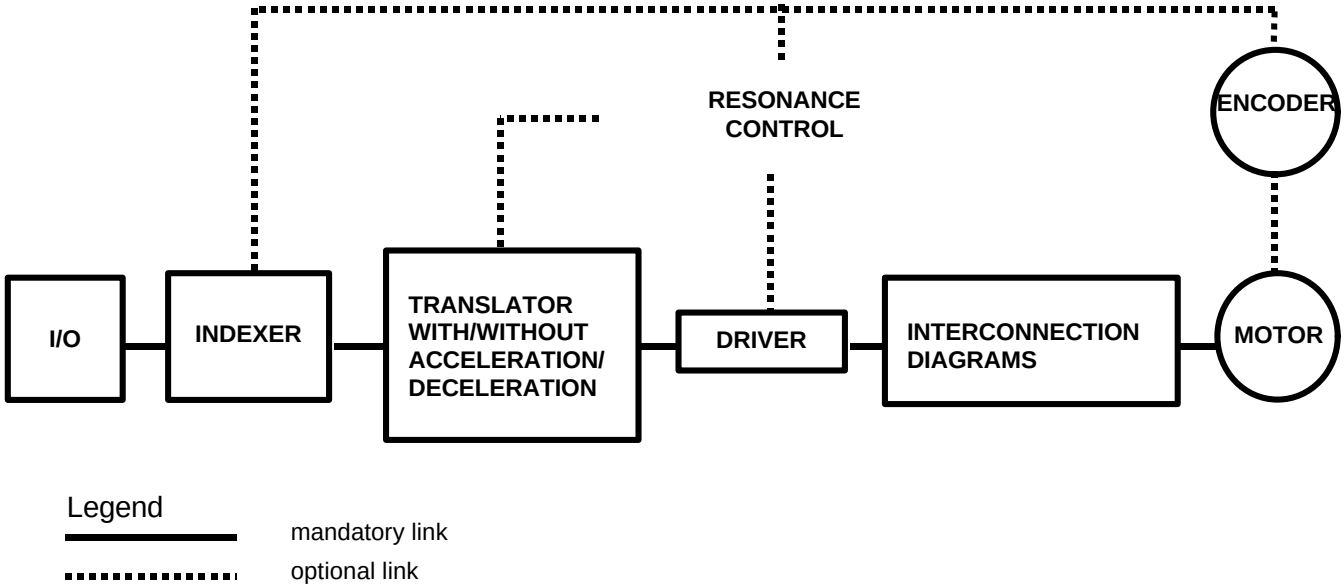

Figure 15 — Example of a stepping motor motion control system

3.4.3.1.1
closed loop control system
system that utilizes a feedback device (encoder, resolver, or the like) to enhance performance of the system by providing better acceleration and speed capabilities as well as better system stability

3.4.3.1.2
driver
portion of the control that provides power to the stepping motor in a controlled manner to achieve the specified motor performance characteristics

NOTE The closed loop control system also provides assurance that the programmed position is actually achieved.

3.4.3.1.3
interface
link to external intelligence via an accepted interface standard such as EIA 232-D and IEEE 488

3.4.3.1.4
open loop control system
system that utilizes the stepping motor inherent positioning capabilities to provide precise motion

3.4.3.1.5
resonance controller
feedback device which may use the encoder information or internal decoded information to improve system stability

NOTE This feedback device is sometimes called "pulse placement" and is useful in other resonance applications.

Copyright National Electrical Manufacturers Association
Provided by IHS under license with NEMA
No reproduction or networking permitted without license from IHS
Not for Resale

3.4.3.1.6
stepping motor controller
system that provides intelligence and power to the stepping motor controlled

3.4.3.1.7
indexer
part of the controller that retains the motion command data to determine the move sequence

3.4.3.1.8
translator
control section that converts the input commands to a suitable logic patterned waveform to properly drive the stepping motor

3.4.3.2
acceleration/deceleration
<stepping motor control> increase/decrease in velocity of a stepping motor by adjustment of pulse rate

3.4.3.3
base speed
speed that can be achieved without ramping and with no position error with a specified load

3.4.3.4
bi-level drive
dual voltage motor drive circuit, which provides high voltage to initially build up the current in the windings, and then switches to a low voltage after the rated current or preset time is reached

NOTE This decreases the motor current build up time and improves motor performance.

3.4.3.5
chopper drive
motor drive circuit in which the supply voltage is switched (chopped) by pulse width or frequency modulation or both to maintain an average current level to the motor windings

NOTE The chopping frequency can typically range from 1 kHz to 30 kHz. This permits the use of drive voltages several times the motor's rated value to cause the motor currents to build up rapidly for improved high-speed performance.

3.4.3.6
command pulse rate
rate at which successive command pulses are applied to the motor drive logic

3.4.3.7
constant current drive
motor drive circuit which maintains the average motor currents relatively constant independent of motor speed (e.g. chopper or linear driver with current feedback loop) in order to provide improved high speed motor performance

3.4.3.8
drive circuits
combination of a translator and a power amplifier that energizes the phases of the stepping motor

Copyright National Electrical Manufacturers Association
Provided by IHS under license with NEMA
No reproduction or networking permitted without license from IHS
Not for Resale

3.4.3.9 Drive configuration definitions

3.4.3.9.1
bipolar
excitation mode of a stepping motor phase, in which current flows in two directions

NOTE Bipolar excitation uses all of the turns around each stator pole and therefore is capable of producing more low speed torque than unipolar type excitation. Bipolar resistance is equal to two times unipolar resistance so power is kept constant by reducing current by a factor equal to the square root of two. Two phase bipolar drives require four motor leads and require twice as many power switching devices than unipolar drives to achieve bi-directional current flow. An example of a bipolar drive circuit is shown in Figure 16; a single supply-parallel bipolar drive circuit is shown in Figure 17.

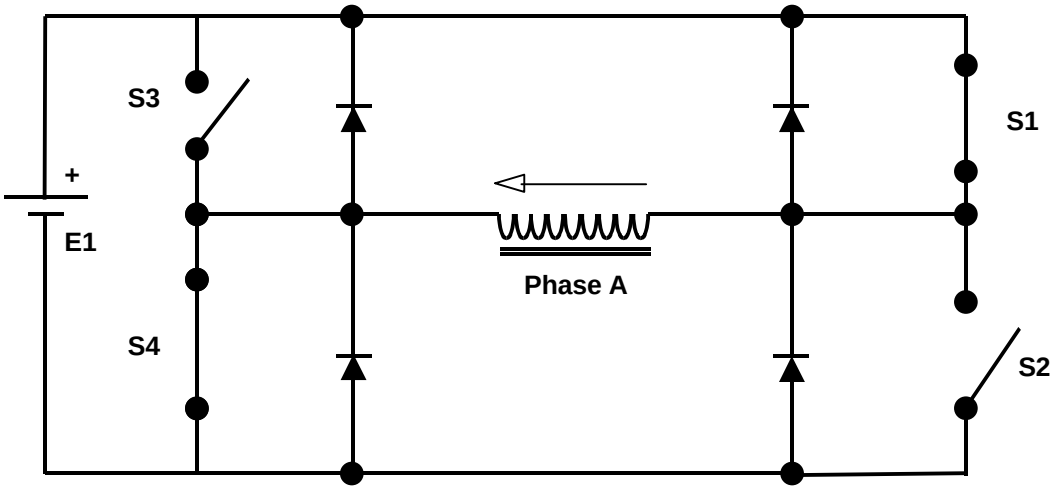

Figure 16 — Bipolar drive circuit

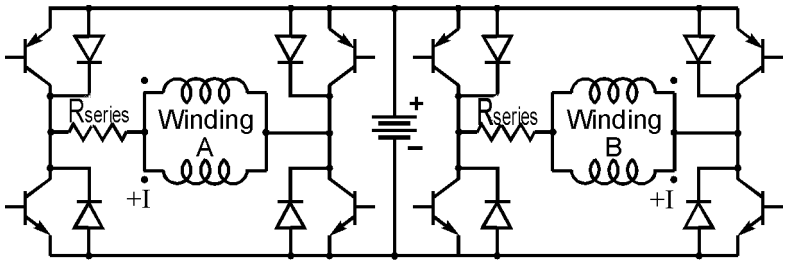

Single Supply - Parallel Bipolar Drive Circuit

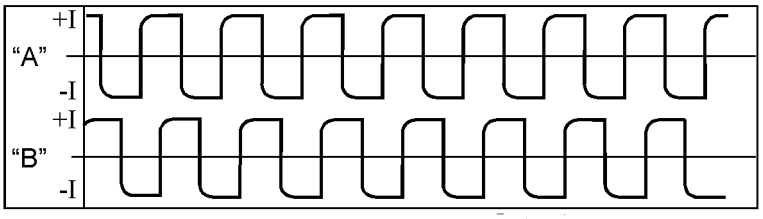

Full Step CW

Figure 17 — Single supply – parallel bipolar drive circuit

Copyright National Electrical Manufacturers Association
Provided by IHS under license with NEMA
No reproduction or networking permitted without license from IHS
Not for Resale

3.4.3.9.2
unipolar
excitation mode of a stepping motor phase, in which current flows in only one direction

NOTE Unipolar excitation uses only half of the turns around each stator pole and therefore offers lower torque than bipolar type excitation at low speeds. However, since inductance is proportional to the square of the number of turns, unipolar excitation offers relatively good speed performance and lower cost drive electronics. A two phase, unipolar type drive uses motors with six leads. An example of a two phase, unipolar drive circuit is shown in Figure 18.

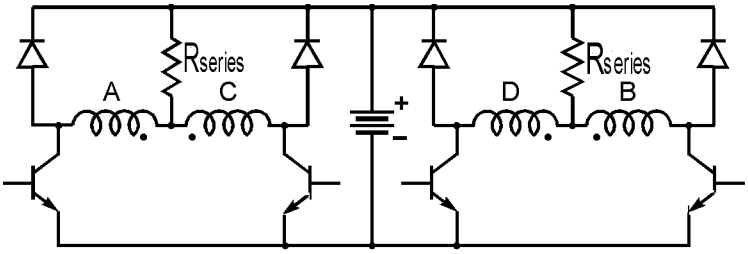

Unipolar Drive Circuit

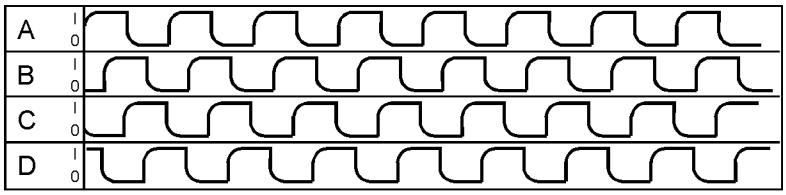

Winding Currents for Full Step Rotation (20 On, Unipolar)

Figure 18 — Unipolar drive circuit

3.4.3.10
maximum reversing command pulse rate
maximum pulse rate at which the unloaded stepping motor is able to reverse and remain in synchronism under the specified drive conditions

NOTE The number of pulses must be enough to assure stability of the dynamic load angle before reversal.

3.4.3.11
pulse stream control
direction control method where separate pulse stream inputs are provided for clockwise or counterclockwise rotation of the stepping motor

3.4.3.12
ramping
acceleration/deceleration of a stepping motor by means of controlled change in a pulse rate above base speed

3.4.3.13
response range
range of command pulse rates over which the unloaded motor can be operated in one of the following specified conditions without missing steps:

Copyright National Electrical Manufacturers Association
Provided by IHS under license with NEMA
No reproduction or networking permitted without license from IHS
Not for Resale

a) start-stop without reversal;
b) reverse during acceleration, deceleration, or slew;
c) acceleration *and* deceleration;
d) acceleration *or* deceleration

3.4.3.14
rotation
<stepping motor control> direction control method where a logic state (high or low) determines direction of rotation of the stepping motor, while a separate pulse stream determines rotor position

3.4.3.15
series resistance drive
L/R drive
motor drive circuit that uses extra resistors in series with the motor windings and drive transistors to reduce the current buildup time constant

NOTE The current buildup time constant is reduced from L_m/R_m to $L_m/(R_m+R)$, where

L_m is the inductance of the motor windings;

R_m is the resistance of the motor windings;

R is the extra series resistance.

Copyright National Electrical Manufacturers Association
Provided by IHS under license with NEMA
No reproduction or networking permitted without license from IHS
Not for Resale

4 Control motors

4.1 Requirements common to all control motors

4.1.1 Ratings

4.1.1.1 Ambient temperature

Stepping and servo motors shall be rated on the basis of a specific ambient temperature. The rated value of this ambient temperature shall be 40°C (104°F) unless otherwise specified by the manufacturer.

4.1.1.2 Operation at altitudes above 1,000 meters (3,300 feet)

The maximum temperature ratings given for machines in 4.2.2 are based upon operation at altitudes of 1,000 meters (3,300 feet) or less. It is also recognized as good practice to use machines at altitudes greater than 1,000 meters (3,300 feet) as indicated below.

Machines that are intended for operation at altitudes above 1,000 meters (3,300 feet) should be designed for a maximum sea level temperature that does not exceed the value calculated in the following ways:

When altitude is in feet: F_D = (Altitude - 3,300)/33,000

When altitude is in meters: F_D = (Altitude - 1,000)/10,000

Then: $è_N = (è_R - è_A)\ (1 - F_D) + è_A$

where

F_D is the altitude derating factor;

$è_R$ is the normal maximum allowable winding temperature;

$è_A$ is the design ambient temperature rating;

$è_N$ is the new maximum allowable temperature at sea level.

Preferred values of altitude are 1,000 meters (3,300 feet); 2,000 meters (6,600 feet); 3,000 meters (9,900 feet); 4,000 meters (13,200 feet); and 5,000 meters (16,500 feet).

At altitudes greater than 1,000 meters (3,300 feet), the reduction in the allowable ambient temperature also reduces the available rated torque of the motor. The new rated torque is calculated as follows:

$$T_{new} = T_{rated} \sqrt{\frac{q_N - q_A}{q_R - q_A}}$$

Copyright National Electrical Manufacturers Association
Provided by IHS under license with NEMA
No reproduction or networking permitted without license from IHS
Not for Resale

where

T_{new} is the new derated torque;

T_{rated} is the rated torque for the design ambient temperature;

$è_A$ is the design ambient temperature rating;

$è_N$ is the new maximum allowable temperature at sea level;

$è_R$ is the normal maximum allowable winding temperature.

4.1.2 Dimensions, tolerances, mounting, and measurement techniques

4.1.2.1 Designation of motors

4.1.2.1.1 Designation of metric dimension motors

Metric dimension motors shall be designated by the shaft diameter, followed by the flange type, and ending with the flange number.

Shaft Diameters: 5 mm to 110 mm.

Flange Types: The type FF flange has free holes (clearance holes) at pitch circle diameter M.

The type FT flange has threaded mount holes at pitch circle diameter M.

Flange Numbers: 55 to 1080.

EXAMPLE 1 24FF130 24mm shaft diameter, with free holes for mounting, and flange number 130

EXAMPLE 2 28FT165 28mm shaft diameter, with threads for mounting, and flange number 165

4.1.2.1.2 Designation of inch dimension motors

Inch dimension motors shall be designated by the flange number, followed by the flange type, and ending with the shaft number.

Flange numbers: 17 to 56.

Flange types: The type C flange has threaded mounting holes at pitch circle diameter M.

The type D flange has free holes (clearance holes) at pitch circle diameter M.

Shaft numbers: 019 to 113: 3 digit numbers, representing the shaft diameter D, in inches x 100.

EXAMPLE 1 For shaft diameter D = 0.6250 inches, 0.6250 x 100 = 62.50; round 62.50 to 63 (values xx.50 and larger are rounded up; xx.49 and smaller are rounded down); add 0 prefix for shafts less than 1.0 inch diameter; result: shaft number = 063.

If the shaft number is not included in the designation, the default shaft diameter shall be specified as in Table 2.

--`,,`,,`-`-`,,`,,`,`,,`---

Copyright National Electrical Manufacturers Association
Provided by IHS under license with NEMA
No reproduction or networking permitted without license from IHS Not for Resale

Table 2 — Shaft number designation

Flange number	17	23	34	42	48	56
Shaft number	020	025	038	063	063	063
Shaft diameter D nominal, inches	0.1969	0.2500	0.3750	0.6250	0.6250	0.6250

EXAMPLE 2 23D025 Flange number 23, with free holes for mounting, and a 0.2500 inch diameter shaft.

EXAMPLE 3 56C063 Flange number 56, with threads for mounting, and a 0.6250 inch diameter shaft.

4.1.2.2 Description of dimensional designators

Dimensions of control motors shall be described using the letter designators shown in Table 3.

Table 3 — Description of dimensional designators

Designator (see Figures 18 and 19)	Previous designators (MG7-1993)		Dimension indicated
	Servo motors	Stepping motors	
AC	---	BH	diameter of the motor
AD	---	---	distance from the center line of the motor to the outside of the terminal box or other accessory mounted on the motor
BD	P	---	width (and height) of the square type mounting flange
D	U	U	diameter of the shaft
E	AH – BC [a]	---	length of the shaft from the shaft shoulder
F	S	---	width of the key and width of the keyway of the shaft
GA	---	---	distance from the top of the key to the opposite surface of the shaft
GD	---	---	height of the key
GE	---	---	depth of the keyway at the crown of the shaft
L	---	AH + AG	overall length of the motor including the shaft
LA	---	G	thickness of the flange
LB	---	AG	distance from the mounting surface of the flange to the end of the motor
L – LB [a]	AH	AH	length of the shaft from the mounting surface of the flange
M	AJ	AJ	pitch circle diameter of the mounting holes (free or tapped) of the motor
N	AK	AK	diameter of the pilot
P	BD	A	outside diameter of the flange, or in the case of a non-circular outline twice the maximum radial dimension
R	BC	---	distance from the mounting surface of the flange to the shoulder on the shaft
S	BF	H	diameter of the free holes or the tapped holes in the mounting flange
T	BB	BB	depth of the pilot

[a] "–" designates subtraction, or the difference between two dimensions.

Copyright National Electrical Manufacturers Association
Provided by IHS under license with NEMA
No reproduction or networking permitted without license from IHS
Not for Resale

4.1.2.3 Dimensions for mounting flanges

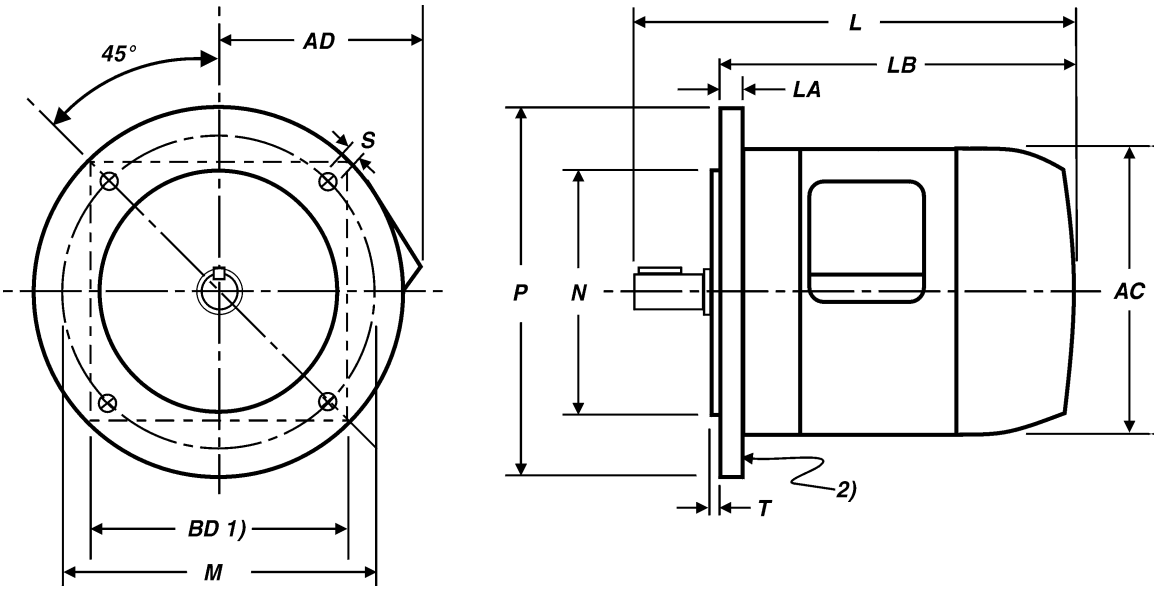

Legend

1) The external outline of the mounting flange may be other than circular, but must remain within the limits of the P diameter;
2) Access to the back of the mounting flange is required for the D flange. Access to the back of the mounting flange is not required for the C flange.

NOTE Dimensions for designators AC, AD, L, LA, and LB are not included in this standard. Dimensions for designator BD is provided as a reference only, i.e. without tolerances.

Figure 19 — Mounting Dimensions for Control Motors

For inch dimension motors, the dimensions for mounting flanges shown in Table 4 shall apply. For metric dimension motors, the dimensions for mounting flanges shown in Table 5 shall apply.

Copyright National Electrical Manufacturers Association
Provided by IHS under license with NEMA
No reproduction or networking permitted without license from IHS
Not for Resale

Copyright National Electrical Manufacturers Association
Provided by IHS under license with NEMA
No reproduction or networking permitted without license from IHS
Not for Resale

Table 4 — Dimensions for mounting flanges for inch dimension motors

Flange number	inches	N			P	BD[c]	Number of holes	S			Tapped holes (for C flange)	T	
		Nominal	Tolerance		Maximum			Free holes (for D flange)					
								Nominal	Tolerance			Maximum	Minimum
	inches	inches	inches	inches	inches	inches		inches	inches	inches	thread	inches	inches
17	1.725 [a]	0.8661	0	-0.0020	2.36	1.7	4	0.150	+0.010	-0.010	4-40	0.09	0.03
23	2.625	1.5000	0	-0.0020	3.21	2.3	4	0.205	+0.010	-0.010	8-32	0.13	0.06
34	3.875	2.8750	0	-0.0020	3.58	3.4	4	0.220	+0.010	-0.010	10-32	0.13	0.06
42	4.950	2.1875	0	-0.0020	6.19	4.2	4	0.280	+0.010	-0.010	0.250-20	0.13	0.06
48	3.750	3.0000	0	-0.0030	5.63	—	4	0.280	+0.010	-0.010	0.250-20	0.16	0.10
56	5.875	4.5000	0	-0.0030	8.00 [b]	—	4	0.400	+0.010	-0.010	0.375-16	0.16	0.10

[a] 1.725 applies to C flange (threaded holes). For D flange (free holes), dimension is 2.000.

[b] The standard nominal P dimension is 6.50 inches for flange number 56.

[c] BD dimensions shown (for non-circular flanges) are approximate values for reference only. An actual BD value is determined by the manufacturer. For square flanges, the BD value chosen by the manufacturer may require rounding of the square flange corners to fit within the P maximum diameter values shown.

Table 5 — Dimensions for mounting flanges for metric dimension motors

Flange Number	BD[a] (square flange) maximum	N			P	Number of holes	S			Tapped Holes (for FT flange)	T
		Nominal	Tolerance		Maximum		Free holes (for FF flange)				
							Nominal	Tolerance			Maximum
M	mm	mm	µm	µm	mm		mm	µm	µm	thread	mm
55	53	40	+0	-16	70	4	5.8	+300	0	M5	2.5
65	60	50	+0	-16	80	4	5.8	+300	0	M5	2.5
70	60	50	+0	-16	80	4	5.5	+300	0	M5	2.5
75	70	60	+0	-25	90	4	5.8	+300	0	M5	2.5
85	80	70	+0	-25	105	4	7	+360	0	M6	2.5
100	90	80	+0	-30	120	4	7	+360	0	M6	3
115	105	95	+0	-35	140	4	10	+360	0	M8	3
130	120	110	+0	-35	160	4	10	+360	0	M8	3.5
145	130	110	+0	-35	165	4	9	+360	0	M8	3
165	140	130	+0	-35	200	4	12	+430	0	M10	3.5
200	174	114.3	+0	-25	225	4	13.5	+430	0	M12	4
215	190	180	+0	-35	250	4	14.5	+430	0	M12	4
265	225	230	+0	-40	300	4	14.5	+430	0	M12	4
300	265	250	+0	-45	350	4	18.5	+520	0	M16	5
350	300	300	+0	-52	400	4	18.5	+520	0	M16	5
400	340	350	+0	-57	450	8	18.5	+520	0	M16	5
500	415	450	+0	-57	550	8	18.5	+520	0	M16	5
600	495	550	+0	-57	660	8	24	+520	0	M20	6
740	600	680	+0	-57	800	8	24	+520	0	M20	6
940	750	880	+0	-57	1000	8	28	+520	0	M24	6
1080	865	1000	+0	-57	1150	8	28	+520	0	M24	6

[a] BD dimensions shown (for non-circular flanges) are approximate values for reference only. An actual BD value is determined by the manufacturer. For square flanges, the BD value chose n by the manufacturer may require rounding of the square flange corners to fit within the P maximum diameter values shown.

Copyright National Electrical Manufacturers Association
Provided by IHS under license with NEMA
No reproduction or networking permitted without license from IHS
Not for Resale

4.1.2.4 Dimensions for shafts

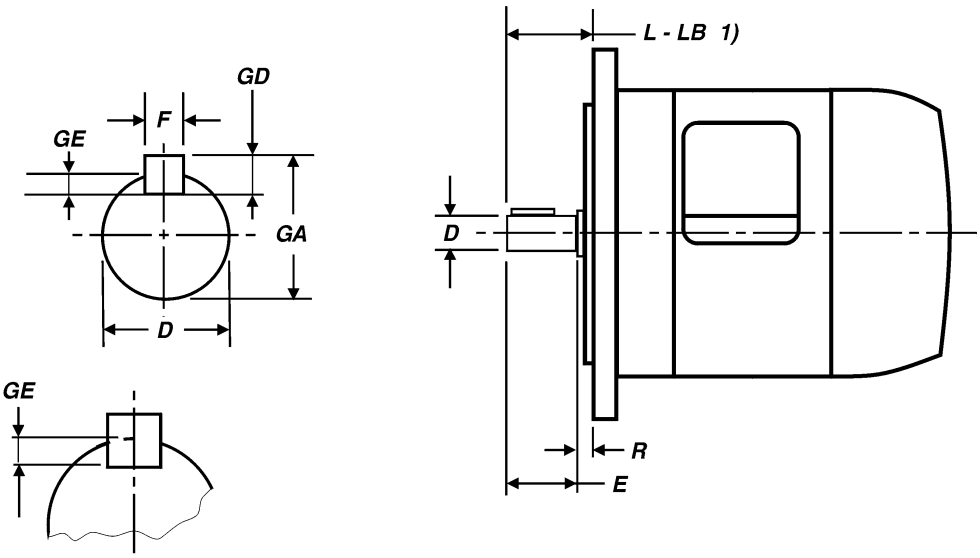

Legend

1) L minus LB (L–LB) is the preferred designation for the length of the shaft from the mounting surface of the flange. Dimension L–LB can be determined from dimension E+R included in the tables (L–LB = E+R).

Figure 20 — Shaft dimensions for control motors

For inch dimension motors, the dimensions for shafts shown in Table 6 shall apply. For metric dimension motors, the dimensions for shafts shown in Table 7 shall apply.

Copyright National Electrical Manufacturers Association
Provided by IHS under license with NEMA
No reproduction or networking permitted without license from IHS
Not for Resale

Table 6 — Dimensions for shafts, keys and keyways for inch dimension motors

Shaft number	D			E + R [a]			Key				Keyway								Maximum Continuous Shaft Torque
	Nom-inal	Tolerance		Nom-Inal	Tolerance		F, GD				F				GE				
							Nom-Inal	Tolerance			Nom-inal	Tolerance			Nom-inal	Tolerance			
	in.	in.	in.	in.	in.	in.	in.	in.	in.		in.	in.	in.		in.	in.	in.		lb-in.
019	0.1875	0	-0.0005	0.812	+0.031	-0.031	[b]				[b]				[b]				0.74
020	0.1969	0	-0.0005	0.812	+0.031	-0.031													1.0
025	0.2500	0	-0.0005	0.812	+0.031	-0.031													1.35
031	0.3125	0	-0.0005	0.938	+0.031	-0.031													3.5
038	0.3750	0	-0.0005	1.250	+0.031	-0.031													5.6
044	0.4375	0	-0.0005	1.250	+0.031	-0.031	0.0938	+0.0010	0		0.0938	+0.0020	0		0.052	+0.015	0		10.9
050	0.5000	0	-0.0005	1.500	+0.031	-0.031	0.1250	+0.0010	0		0.1250	+0.0020	0		0.070	+0.015	0		15.2
063	0.6250	0	-0.0005	2.063	+0.031	-0.031	0.1875	+0.0010	0		0.1875	+0.0020	0		0.108	+0.015	0		39.6
075	0.7500	0	-0.0005	2.250	+0.031	-0.031	0.1875	+0.0010	0		0.1875	+0.0020	0		0.106	+0.015	0		73.0
088	0.8750	0	-0.0005	2.250	+0.031	-0.031	0.1875	+0.0010	0		0.1875	+0.0020	0		0.104	+0.015	0		121.5
100	1.0000	0	-0.0005	2.500	+0.031	-0.031	0.2500	+0.0010	0		0.2500	+0.0020	0		0.141	+0.015	0		190.6
113	1.1250	0	-0.0005	2.750	+0.031	-0.031	0.2500	+0.0010	0		0.2500	+0.0020	0		0.139	+0.015	0		284

[a] The shaft shoulder which is larger in diameter than the D dimension, and shown with length R, is an optional feature on inch dimension motors. For motors with this shaft shoulder; R maximum = T, R minimum = 0.

[b] The key and keyway is not provided for shaft numbers 019 to 038. A flat on the shaft may be provided, optionally, for shaft numbers 019 to 038.

Copyright National Electrical Manufacturers Association
Provided by IHS under license with NEMA
No reproduction or networking permitted without license from IHS
Not for Resale

Table 7— Dimensions for shafts, keys and keyways for metric dimension motors

D			E	R	Key						Keyway						Maximum Continuous Shaft Torque
			Nominal			F		GD				F		GE			
Nominal	Tolerance [b]				Nom-inal	Tolerance		Nom-inal	Tolerance		Nom-inal	Tolerance		Nom-inal	Tolerance		N-m
mm	µm	µm	mm	mm	mm	µm	µm	mm	µm	µm	mm	µm	µm	mm	µm	µm	
5	+0	-8	16	0	[a]												
6	+0	-8	16	0	2	0	-25	2	0	-25	2	-4	-29	1.2	+100	0	0.25
7	+0	-9	16	0													
8	+0	-9	18	0	2	0	-25	2	0	-25	2	-4	-29	1.2	+100	0	0.4
9	+0	-9	20	0	3	0	-25	3	0	-25	3	-4	-29	1.8	+100	0	0.63
10	+0	-9	20	12	3	0	-25	3	0	-25	3	-4	-29	1.8	+100	0	0.875
11	+0	-11	23	0	4	0	-30	4	0	-30	4	0	-30	2.5	+100	0	1.25
14	+0	-11	30	0	5	0	-30	5	0	-30	5	0	-30	3	+100	0	2.8
16	+0	-11	40	0	5	0	-30	5	0	-30	5	0	-30	3	+100	0	4.1
18	+0	-11	40	0	6	0	-30	6	0	-30	6	0	-30	3.5	+100	0	7.1
19	+0	-13	40	0	6	0	-30	6	0	-30	6	0	-30	3.5	+100	0	8.25
22	+0	-13	50	0	6	0	-30	6	0	-30	6	0	-30	3.5	+100	0	14
24	+0	-13	50	0	8	0	-36	7	0	-90	8	0	-36	4	+200	0	18
28	+0	-13	60	0	8	0	-36	7	0	-90	8	0	-36	4	+200	0	31.5
32	+0	-16	80	0	10	0	-36	8	0	-90	10	0	-36	5	+200	0	50
35	+0	-16	76	3	10	0	-36	8	0	-90	10	0	-36	5	+300	0	69
38	+0	-16	80	0	10	0	-36	8	0	-90	10	0	-36	5	+200	0	90
42	+0	-16	110	0	12	0	-43	8	0	-90	12	0	-43	5	+200	0	125
48	+0	-16	110	0	14	0	-43	9	0	-90	14	0	-43	5.5	+200	0	200
55	+0	-41	110	0	16	0	-43	10	0	-90	16	0	-43	6	+200	0	355
60	+0	-41	140	0	18	0	-43	11	0	-110	18	0	-43	7	+200	0	450
65	+0	-41	140	0	18	0	-43	11	0	-110	18	0	-43	7	+200	0	630
70	+0	-41	140	0	20	0	-52	12	0	-110	20	0	-52	7.5	+200	0	800
75	+0	-41	140	0	20	0	-52	12	0	-110	20	0	-52	7.5	+200	0	1000
80	+0	-41	170	0	22	0	-52	14	0	-110	22	0	-52	9	+200	0	1250
85	+0	-48	170	0	22	0	-52	14	0	-110	22	0	-52	9	+200	0	1600
90	+0	-48	170	0	25	0	-52	14	0	-110	25	0	-52	9	+200	0	1900

[a] The key and keyway is not provided for shaft numbers 5 and 6.

[b] Tolerances follow North American practice; alternate tolerancing is provided in IEC 60072-1.

Copyright National Electrical Manufacturers Association
Provided by IHS under license with NEMA
No reproduction or networking permitted without license from IHS
Not for Resale

4.1.2.5 Shaft runout

Shaft runout shall be measured with the indicator stationary with respect to the motor, and with its point at the end of the finished surface of the shaft. The difference between the maximum and minimum readings on the indicator shall not exceed the values specified in Tables 8 and 9. See Figure 21 for typical fixtures.

Table 8 — Tolerances for shaft runout for metric dimension motors

Diameter, D (mm)	Maximum shaft runout (ìm)
D ≤ 10	30
10 < D ≤ 18	35
18 < D ≤ 30	40
30 < D ≤ 50	50
50 < D ≤ 80	60
80 < D ≤ 110	70

Table 9 — Tolerances for shaft runout for inch dimension motors

Diameter, D (inches)	Maximum shaft runout (inches)
0.1875 ≤ D ≤ 1.1250	0.002

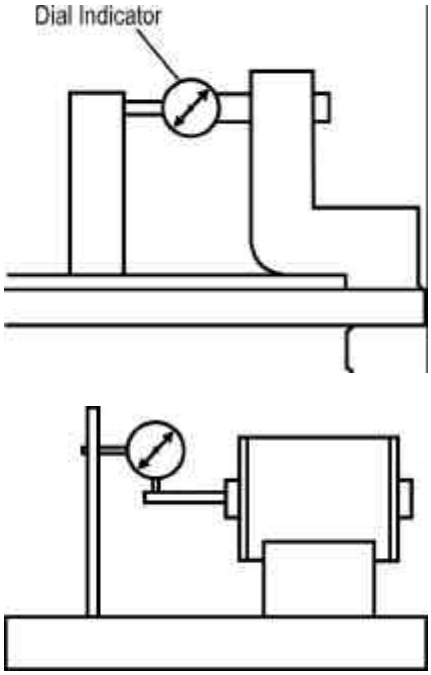

Figure 21 — Typical fixtures for shaft runout

Copyright National Electrical Manufacturers Association
Provided by IHS under license with NEMA
No reproduction or networking permitted without license from IHS
Not for Resale

4.1.2.6 Pilot and flange mounting surface runout

Pilot diameter and flange mounting surface runout shall be measured with an indicator mounted on the shaft. The point of the pilot diameter runout indicator shall be at approximately the middle of the pilot diameter surface. The point of the mounting surface runout indicator shall be approximately at the outer diameter of the mounting surface. The difference between the maximum and minimum readings on the indicator for each measurement shall not exceed the values specified in Tables 10 and 11. See Figure 22.

On ball bearing motors, it is recommended to conduct these measurements with the shaft vertical, to minimize the effect of bearing clearances on the readings.

NOTE Pilot diameter runout is sometimes called concentricity, and mounting surface runout is sometimes called perpendicularity. The term runout is preferred for these measurements.

Table 10 — Tolerance for runout of pilot and mounting surface of flange to shaft for metric dimension motors

Flange number	Maximum runout of pilot diameter N, Maximum runout of flange mounting surface (ìm)
55 to 115	80
130 to 265	100
300 to 500	125
600 to 740	160
940 to 1080	200

Table 11 — Tolerance for runout of pilot and mounting surface of flange to shaft for inch dimension motors

Flange number	Maximum runout of pilot diameter N, Maximum runout of flange mounting surface (inches)
17 to 56	0.004

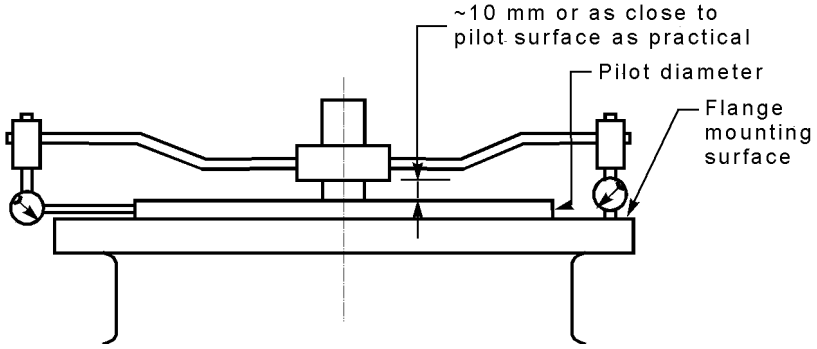

Figure 22 — Pilot and flange mounting surface runout measurement fixture

Copyright National Electrical Manufacturers Association
Provided by IHS under license with NEMA
No reproduction or networking permitted without license from IHS
Not for Resale

4.1.2.7 Axial end play

Place a hub on the motor shaft and lock the motor in a test fixture, with a dial indicator touching the hub. See Figure 23.

Apply a force, F_1, to the end of the shaft first in one direction and then in the other and note the maximum and minimum readings of the indicator. The axial end play is the difference between the maximum and minimum readings. Force F_1 is the maximum axial load rating of the motor.

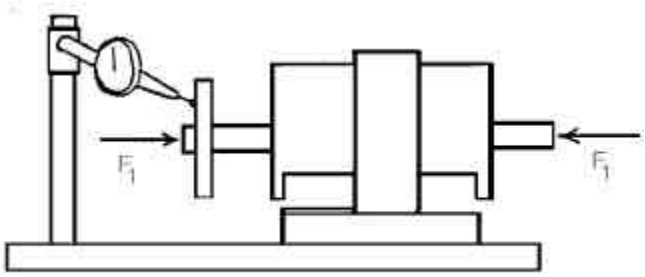

Figure 23 — Axial end play test setup

The support structure must be rigid so that it does not affect the indicator readings under the forces applied. Alternatively, mount the indicator to the motor face to make the indicator readings independent of the support structure.

4.1.2.8 Radial play

Place an indicator on the motor shaft or hub as close to the motor face as practicable and lock the motor in a test fixture with a dial indicator touching the periphery of the shaft or hub. See Figure 24.

Apply a force, F_2, at a distance "B" from the mounting surface, first in one vertical direction and then the other. Radial play is the total displacement measured. Force F_2 is the maximum radial load rating of the motor at distance "B" as specified by the manufacturer.

Copyright National Electrical Manufacturers Association
Provided by IHS under license with NEMA
No reproduction or networking permitted without license from IHS
Not for Resale

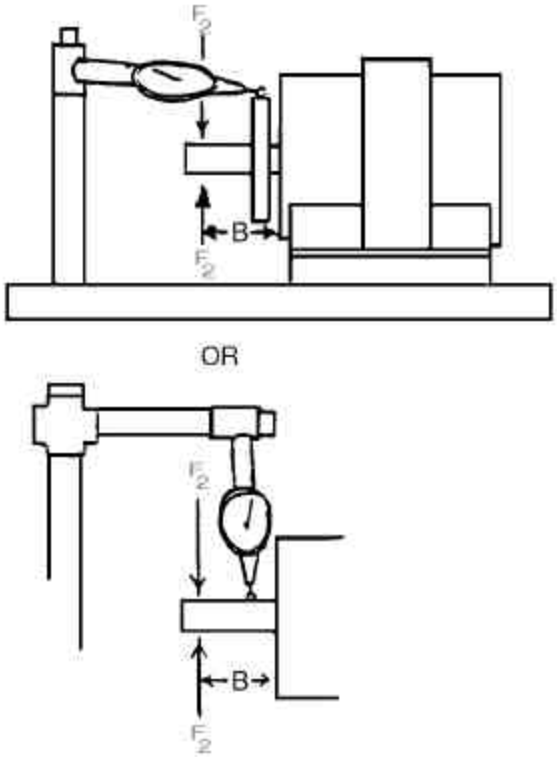

Figure 24 — Radial play test setup

4.1.3 Enclosures

4.1.3.1 Purpose

The purpose of this subclause is to describe:

a) definitions for standard degrees of protection provided by enclosures applicable to electrical rotating machines regarding

   1) protection of persons against contact with, or approach to, live parts,
   2) protection of persons against contact with moving parts (other than smooth rotating shafts and the like) inside the enclosure,
   3) protection of the machine against ingress of solid foreign objects,
   4) protection of machines against the harmful effects due to the ingress of water;

b) designations for these protective degrees;

c) tests to be performed to check that the machines meet the requirements of this standard.

Copyright National Electrical Manufacturers Association
Provided by IHS under license with NEMA
No reproduction or networking permitted without license from IHS
Not for Resale

4.1.3.2 Scope

Information in this subclause applies to the classification of degrees of protection provided by enclosures for rotating machines.

This subclause defines the requirements with which protective enclosures shall comply.

This subclause deals only with enclosures that are in all other respects suitable for their intended use and which from the point of view of materials and workmanship ensure that the properties dealt with in this subclause are maintained under the normal conditions of use.

This subclause does not specify degrees of protection against mechanical damage of the machine, or conditions such as moisture (produced for example by condensation) corrosive vapors, fungus, or vermin.

This subclause does not specify types of protection of machines for the use in an explosive atmosphere.

Fences external to the enclosure that have to be provided solely for the safety of personnel are not considered part of the enclosure and are not dealt with in this standard.

4.1.3.3 Designation

The designation used for the degree of protection shall consist of the letters IP followed by two characteristic numerals signifying conformity with the conditions indicated in Tables 12 and 14.

4.1.3.3.1 Single characteristic numeral

When it is required to indicate a degree of protection by only one characteristic numeral, the omitted numeral shall be replaced by the letter X. For example IPX5 or IP2X.

4.1.3.3.2 Supplementary letters

Additional information may be indicated by a supplementary letter.

4.1.3.3.2.1 Letters following numerals

In special applications (such as machines with open circuit cooling for ship deck installation with air inlet and outlet openings closed during standstill) numerals may be followed by a letter indicating whether the protection against harmful effects due to ingress of water was verified or tested for the machine not running (letter S) or the machine running (letter M). In this case the degree of protection in either state of the machine shall be indicated, for example IP55S/IP20M.

The absence of the letters S and M shall imply that the intended degree of protection will be provided under all normal conditions of use.

Copyright National Electrical Manufacturers Association
Provided by IHS under license with NEMA
No reproduction or networking permitted without license from IHS
Not for Resale

4.1.3.3.2.2 Letters placed immediately after the letters IP

For machines suitable for use under specified weather conditions and provided with additional protective features or processes, the letter W (placed immediately after the letters IP) shall be used.

4.1.3.3.3 Example of designation

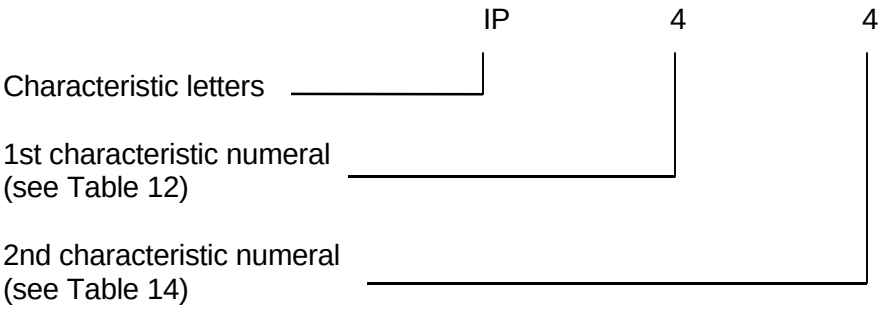

4.1.3.4 Degrees of protection — first characteristic numeral

4.1.3.4.1 The first characteristic numeral shall indicate the degree of protection provided by the enclosure with respect to persons and also to the parts of the machine inside the enclosure.

Table 12 gives, in column 3, brief details of objects that will be "excluded" from the enclosure for each of the degrees of protection represented by the first characteristic numeral.

The term "excluded" implies that a part of the body, or a tool or a wire held by a person, either will not enter the machine or, if it enters, that adequate clearance will be maintained between it and the live parts or dangerous moving parts (smooth rotating shafts and the like are not considered dangerous).

Column 3 of Table 12 also indicates the minimum size of solid foreign objects that will be excluded.

4.1.3.4.2 Compliance of an enclosure with an indicated degree of protection shall imply that the enclosure will also comply with all lower degrees of protection in Table 12. In consequence, the tests establishing these lower degrees of protection are not required, except in case of doubt.

--`,,`,,`-`-`,,`,,`,`,,`---

Copyright National Electrical Manufacturers Association
Provided by IHS under license with NEMA
No reproduction or networking permitted without license from IHS
Not for Resale

Table 12 — Degrees of protection indicated by the first characteristic numeral

Degree of Protection			
First Characteristic Numeral	**Brief Description [a]**	**Definition**	**Test Condition**
0	Non-protected machine	No special protection	No test
1 [b]	Machine protected against solid objected greater than 50 mm (2 inches)	Accidental or inadvertent contact with approach to live and moving parts inside the enclosure by a large surface of the human body, such as a hand (but no protection against deliberate access). Ingress of solid objects exceeding 50 mm (2 inches) in diameter.	Per IEC 60529
2 [b]	Machine protected against solid objects greater than 12 mm (0.5 inches)	Contact by fingers or similar objects not exceeding 80 mm (3.2 inches) in length with or approach to live or moving parts inside the enclosure. Ingress of solid objects exceeding 12 mm (0.5 inches) in diameter	Per IEC 60529
3 [b]	Machine protected against solid objects greater than 2.5 mm (0.1 inches)	Contact with or approach to live or moving part side the enclosure by tools or wires exceeding 2.5 mm (0.1 inches) in diameter. Ingress of solid objects exceeding 1 mm (0.04 inches) in diameter.	Per IEC 60529
4 [b]	Machine protected against solid objects greater than 1 mm (0.04 inches)	Contact with or approach to live or moving parts inside the enclosure by wires or strips or thickness greater than 1 mm (0.04 inches) in diameter.	Per IEC 60529
5 [c]	Dust-protected against machine	Contact with or approach to live or moving parts inside the enclosure. Ingress of dust is not totally prevented but dust does not enter in sufficient quantity to interfere with satisfactory operation of the machine.	Per IEC 60529
6 [c]	Dust-tight machine	Contact with or approach to live or moving parts inside the enclosure. No ingress of dust.	Per IEC 60529

[a] The brief description should not be used to specify the form of protection.

[b] Machines assigned a first characteristic numeral 1, 2, 3, or 4 will exclude both regularly and irregularly shaped solid objects provided that three normally perpendicular dimensions of the object exceed the appropriate figure in the “Definition” column.

[c] The degree of protection against dust defined by this standard in a general one. When the nature of the dust is specified (e.g. fibrous particles), test conditions should be determined by agreement manufacturer and user.

--`,,`,,`-`-`,,`,,`,`,,`---

Copyright National Electrical Manufacturers Association
Provided by IHS under license with NEMA
No reproduction or networking permitted without license from IHS
Not for Resale

4.1.3.4.3 External fans

The blades and spokes of fans external to the enclosure shall be protected against contact by means of guards complying with the requirements in Table 13.

For the test, the rotor is slowly rotated by hand.

Smooth rotating shafts and similar parts are not considered dangerous.

NOTE In certain applications (such as agricultural or domestic appliances) more extensive precautions against accidental or deliberate contact may be required if specified.

Table 13 — Requirements for external fans

Protection of machine	Test of fan
IP 0X	—
IP 1X	50 mm sphere test
IP 2X to IP 5X	Finger test

4.1.3.4.4 Drain holes

If the machine is provided with drain holes, the following shall apply:

a) drain holes intended normally to be open on site shall be kept open during testing;

b) drain holes intended normally to be closed on site shall be kept closed during testing;

c) if machines with protection IP 3X or IP 4X are intended to be run with open drain holes, the drain holes may comply with protection IP 2X;

d) if machines with protection IP 5X are intended to be run with open drain holes, the drain holes shall comply with protection IP 4X.

4.1.3.5 Degrees of protection — Second characteristic numeral

4.1.3.5.1 General

The second characteristic numeral shall indicate the degree of protection provided by the enclosure with respect to harmful effects due to ingress of water.

Table 14 gives, in column 3, details of the type of protection provided by the enclosure for each of the degrees of protection represented by the second characteristic numeral.

A machine is considered “weather-protected” when its design reduces the ingress of rain, snow, and airborne particles, under specified conditions, to an amount consistent with correct operation. This degree of protection shall be designated by the letter "W" placed immediately after the two letters IP.

--`,,`,,`-`-`,,`,,`,`,,`---
Copyright National Electrical Manufacturers Association
Provided by IHS under license with NEMA
No reproduction or networking permitted without license from IHS
Not for Resale

Table 14 — Degrees of protection indicated by the second characteristic numeral

Degree of Protection			
Second Characteristic Numeral	**Brief Description [a]**	**Definition**	**Test Conditions**
0	Non-protected machine	No special protection	No test
1	Machine protected against dripping water	Dripping water (vertically falling drops) shall have no harmful effect.	Per IEC 60529
2	Machine protected against dripping water	Vertically dripping waster shall have no harmful effect when the machine is titled at any angle up to 15° from its normal position.	Per IEC 60529
3	Machine protected against spring water	Water falling as spray at an angle up to 60° from the vertical shall have no harmful effect.	Per IEC 60529
4	Machine protected against splashing water	Water splashing against the machine from any direction shall have no harmful effect.	Per IEC 60529
5	Machine protected against splashing water	Water splashing against the machine from any direction shall have no harmful effect.	Per IEC 60529
6	Machine protect against heavy seas	Water from heavy seas or water projected in powerful jest shall not enter the machine in harmful quantities.	Per IEC 60529
7	Machine protected against the effects of immersion	Ingress of water in the machine in a harmful quantity shall no be possible when the machine is immersed in water under stated conditions of pressure and time.	Per IEC 60529
8	Machine protected against continuous submersion	The machine is suitable for continuous submersion in water under conditions which shall be specified by the manufacturer.	Per IEC 60529

[a] The brief description should not be used to specify the form of protection.

Copyright National Electrical Manufacturers Association
Provided by IHS under license with NEMA
No reproduction or networking permitted without license from IHS
Not for Resale

4.1.3.5.2 Lower degrees of protection

Compliance of an enclosure with an indicated degree of protection shall imply that the enclosure will also comply with all lower degrees of protection in Table 14. In consequence, the tests establishing these lower degrees of protection are not required, except in case of doubt.

4.1.3.6 Additional degrees of protection

The letter "V" placed between IP and the numerals shall designate a machine that has been tested for hazardous rotating parts and enameled insulated wire by substituting the probes shown in Figures 25 and 26 for the probe shown in Figure 27. The letter "V" is intended for use only with small machines.

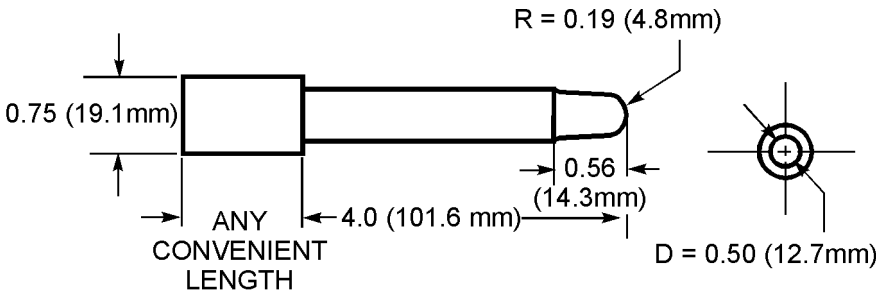

Figure 25 — Probe for hazardous rotating parts

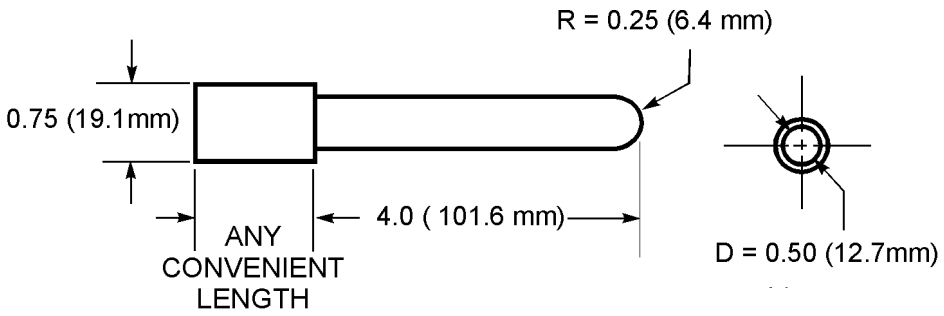

Figure 26 — Probe for film-coated wire

Copyright National Electrical Manufacturers Association
Provided by IHS under license with NEMA
No reproduction or networking permitted without license from IHS
Not for Resale

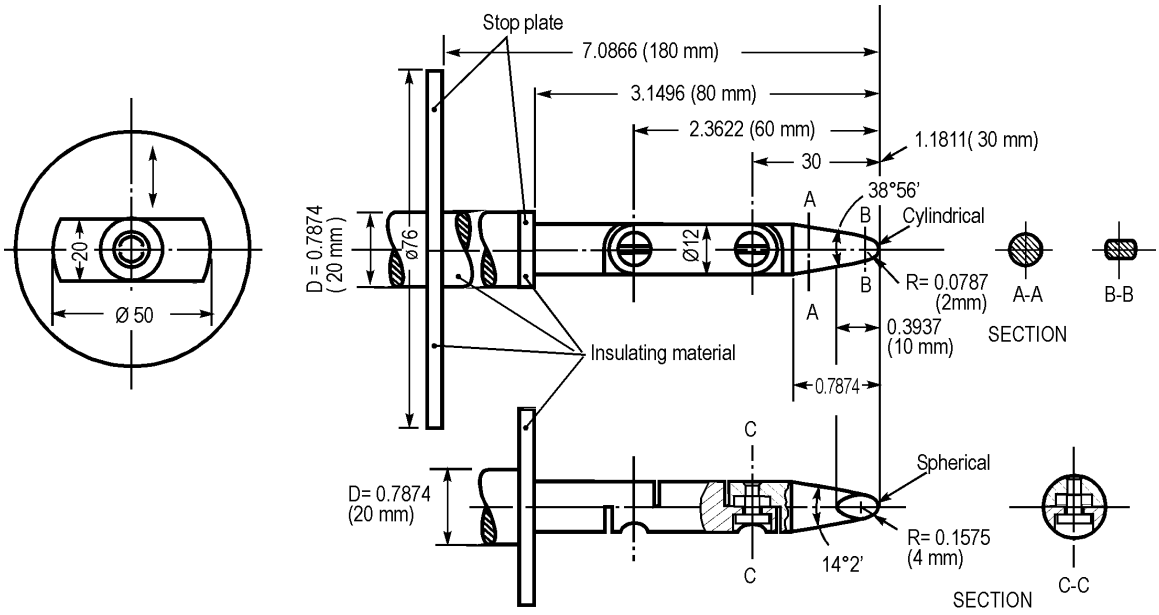

Figure 27 — Articulated probe

Where the mounting of the machine has an influence on the degree of protection, the intended mounting arrangement shall be indicated by the manufacturer on the rating plate or in his instructions for mounting or the like.

4.1.3.7 Test requirements

Test conditions and acceptance criteria for enclosures shall be in accordance with IEC 60529.

4.1.4 Functional tests and performance

4.1.4.1 Moment of inertia

4.1.4.1.1 Single wire hanging method

Suspend the rotor from a hanging wire as shown in Figure 28 and compare its period of oscillation (rotation about the axis of the shaft) to that of a known slug. The moment of inertia is then given by

$$J_r = J_s \left(\frac{t_r}{t_s} \right)^2$$

where

J_r is the moment of inertia of rotor;

J_s is the moment of inertia of known slug;

t_r is the period of rotor;

t_s is the period of known slug.

Copyright National Electrical Manufacturers Association
Provided by IHS under license with NEMA
No reproduction or networking permitted without license from IHS
Not for Resale

If the difference in mass between the reference slug and the rotor is so great that different wires have to be used to obtain straightness and reasonable periods of oscillation, then an intermediate slug shall be used. Measure the period of oscillation of this intermediate slug on each wire and calculate the moment of inertia of the test rotor from the following formula:

$$J_r = J_S \left(\frac{t_r}{t_s} \right)^2 \left(\frac{t_{ws}}{t_{wr}} \right)^2$$

where

t_{wr} is the period of intermediate slug on wire used for the known slug.

t_{ws} is the period of intermediate slug on wire used for the rotor.

NOTE 1 The moment of inertia of the intermediate slug is not required.

NOTE 2 The unidirectional displacement angle should not exceed 45°.

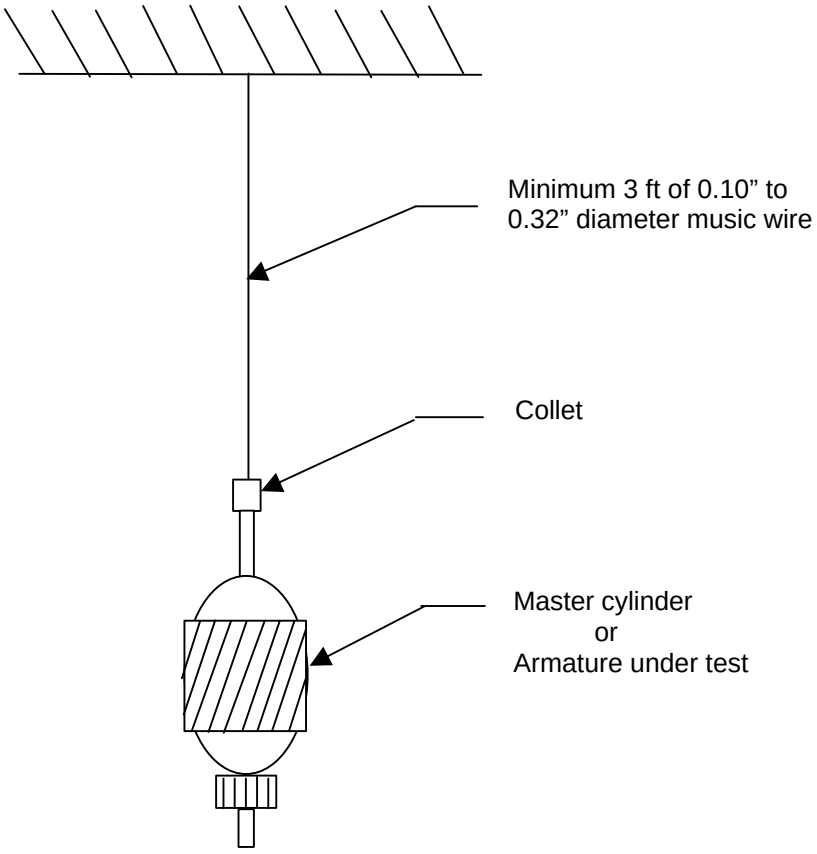

Figure 28 — Moment of inertia wK^2 test: single wire hanging method

Copyright National Electrical Manufacturers Association
Provided by IHS under license with NEMA
No reproduction or networking permitted without license from IHS
Not for Resale

4.1.4.1.2 Double wire hanging method

Suspend the rotor with the shaft oriented vertically using two parallel wires as shown in Figure 29. The wires shall be attached diametrically, equally spaced from the centerline of the shaft, with a length to separation ratio of approximately 10.

Rotate the rotor a small amount from the equilibrium position and, after release, measure the frequency of angular oscillation.

The moment of inertia shall be determined from the following equation:

$$J_r = \frac{(c)(w)(d^2)}{(len)(f^2)}$$

where

J_r is the moment of inertia (see Table 15);

w is the armature weight (see Table 15);

len is the length of wires (see Table 15);

d is the separation of wires (see Table 15);

f is the frequency of oscillation, in Hz;

c is the constant related to units used per Table 15.

Table 15 — Moment of inertia constant

J	w	len,d	c
$kg \cdot m^2$	kg	m	0.0620
$lb \cdot ft^2$ [a]	lb	in	0.2040
$lb \cdot in \cdot s^2$	lb	in	0.0761

[a] numerically equal to wK^2 ($lb \cdot ft^2$)

In order to determine the inertia of the rotor alone, it will often be necessary to subtract the inertia of the test fixture as well as the inertia of couplings attached to the rotor.

Copyright National Electrical Manufacturers Association
Provided by IHS under license with NEMA
No reproduction or networking permitted without license from IHS
Not for Resale

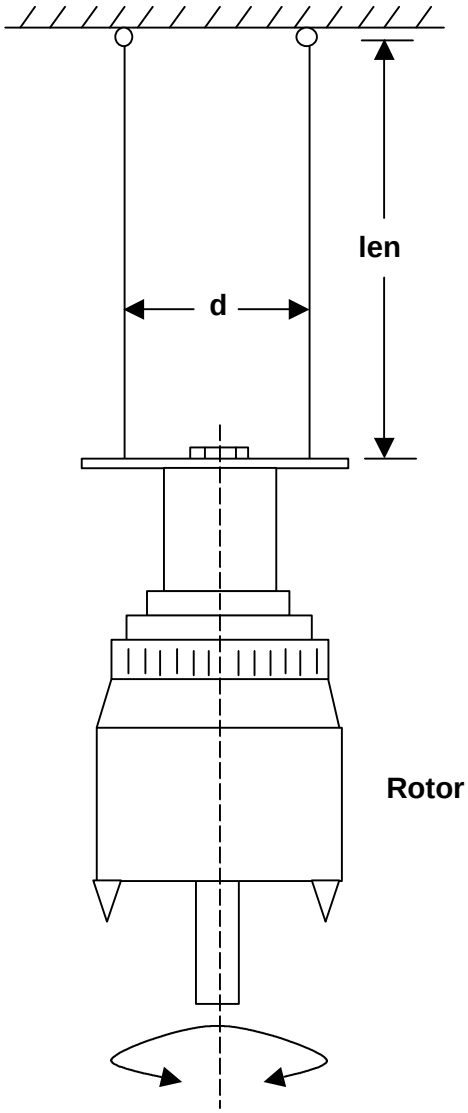

Figure 29 — Moment of inertia wK^2 test: double wire hanging method

4.1.4.2 High potential (dielectric withstand) tests

4.1.4.2.1 Safety

WARNING: because of the high voltages used, high-potential tests should be conducted only by trained personnel, and adequate safety precautions should be taken to avoid injury to personnel and damage to property. Tested windings should be discharged carefully to avoid injury to personnel on contact. See NEMA MG 2.

--`,,`,,`-`-`,,`,,`,`,,`---

Copyright National Electrical Manufacturers Association
Provided by IHS under license with NEMA
No reproduction or networking permitted without license from IHS
Not for Resale

4.1.4.2.2 Test description

High-potential tests consist of the application of a voltage higher than the rated voltage for a specified time for the purpose of determining the adequacy against breakdown of insulating materials and spacings under normal conditions.

4.1.4.2.3 Test voltage

The high-potential test shall be made by applying a test voltage having the magnitude specified in Table 16.

The frequency of the test circuit shall be 50 Hz to 60 Hz, and the effective value of the test voltage shall be the crest value of the specified test voltage divided by the square root of two. The wave shape shall have a deviation factor not exceeding 0.1.

The dielectric test shall be made with a dielectric tester to maintain the specified voltage at the terminals during the test.

When leakage current is measured, the total leakage current from the motor windings to ground or frame is made up of capacitive current and resistive current. Resistive leakage current is a measurement of the level of insulation resistance and is an effective evaluation of the insulation system. Any capacitive current should be determined and excluded when evaluating resistive leakage current.

Table 16 — Voltage tests

Condition A		
Motor Rating	Potential Volts, a.c. rms	Time, Seconds
48 V or less	250	60
greater than 48 V to 250 V	1000	60
more than 250 volts	1000+2.4V [a]	60
Condition B		
Motor Rating	Potential Volts, a.c. rms	Time, Seconds
48 V or less	300	1
greater than 48 V to 250 V	1200	1
more than 250 volts	1200+2.4V [a]	1

[a] Maximum Rated Voltage

4.1.4.2.4 Test procedure

The high-potential test voltage shall be successively applied between each electric circuit and the frame, with the windings not under test and the other metal parts connected to the frame. Interconnected polyphase windings are considered as one circuit.

No leads shall be left unconnected during the test as this may cause an extremely severe strain at some point of the winding. In making the test, the voltage shall be increased to full value as rapidly as possible while still maintaining an accurate meter reading, and the full voltage shall be maintained for 1 minute at condition A of Table 16. It shall then be reduced at a rate that will bring it to one-quarter value or less in not more than 15 seconds.

Copyright National Electrical Manufacturers Association
Provided by IHS under license with NEMA
No reproduction or networking permitted without license from IHS
Not for Resale

As an alternative to the one-minute test, machines for which the specified test voltage is 2500 volts or less may be tested per condition B of Table 16.

To avoid excessive stressing of the insulation, repeated application of the high-potential test voltage is not recommended.

4.1.4.2.5 Additional tests made after installation

When a high-potential test is made after installation on a new machine which has previously passed its high-potential test at the factory and whose windings have not since been disturbed, the test voltage shall be 75 percent of the test voltage specified in Table 16.

4.1.4.2.6 Acceptance criteria

The acceptance criteria shall be:

a) 2 milliamps for test potentials up to and including 1920 volts;

b) 3 milliamps for test potentials from 1921 volts up to and including 2640 volts.

4.1.4.3 Insulation resistance

The insulation resistance test is an optional type test to verify design. The test procedures of ANSI/IEEE 43, Section 7 shall apply. The acceptance criteria for this test shall be determined by the manufacturer.

4.1.4.4 Thermal resistance and time constant

4.1.4.4.1 Thermal model of a motor

The thermal model for an electrical machine may consist of several thermal time constants, however, for ease of analysis a single thermal time constant is usually sufficient for most calculations. See Figure 30.

Copyright National Electrical Manufacturers Association
Provided by IHS under license with NEMA
No reproduction or networking permitted without license from IHS
Not for Resale

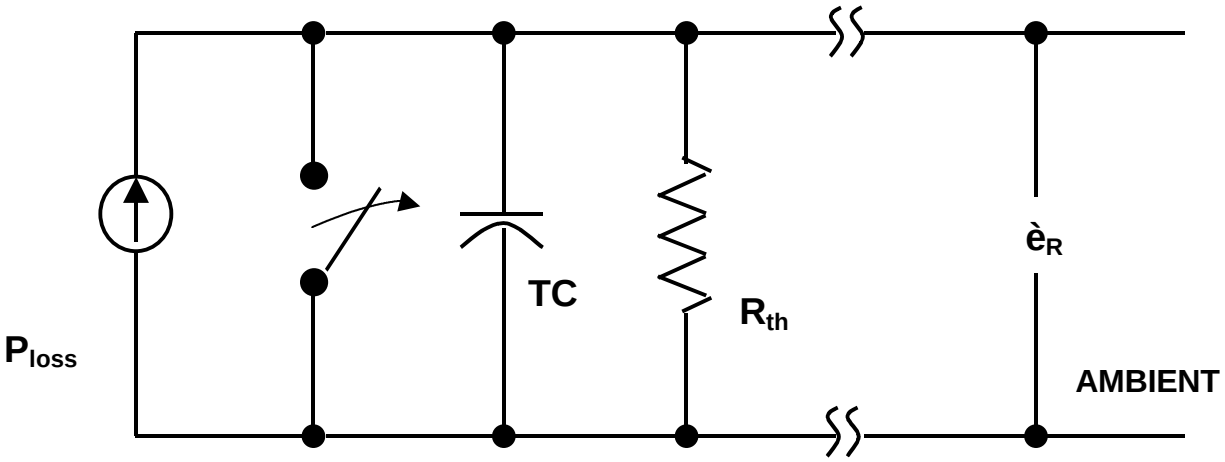

Legend:

P_{loss} power loss, in watts;

TC thermal capacitance, in watt-s/ºC;

R_{th} thermal resistance, in ºC/watt;

$è_R$ temperature rise above ambient, in ºC.

Figure 30 — Thermal model for thermal resistance and time constant

4.1.4.4.2 Test conditions

For motors containing stationary windings, see ANSI/IEEE 112 for an alternative test using thermocouples.

The motor under test shall be permitted to run at very slow speed (less than 5 rpm) to equally distribute the heat generated.

The motor under test shall be thermally isolated from the mounting structure.

Measurements shall be made in still air, or in the case of a blower cooled motor, under a specified method of cooling.

4.1.4.4.3 Test procedure

The following test procedure shall apply. See Figure 31 for clarification of the quantities defined in this test procedure where:

t is the time (see [d] below), in minutes;

P_{loss} is the power loss, in watts;

R_{th} is the thermal resistance ($è_R/P_{loss}$), in ºC/watt;

$è_R$ is the temperature rise above ambient, in ºC;

t_{th} is the thermal time constant ($TCxR_{th}$), in minutes;

$è_F$ is the final temperature at thermal equilibrium, in ºC;

$è_A$ is the ambient temperature, in ºC;

$è_t$ is the temperature at time t, in ºC.

Copyright National Electrical Manufacturers Association
Provided by IHS under license with NEMA
No reproduction or networking permitted without license from IHS Not for Resale

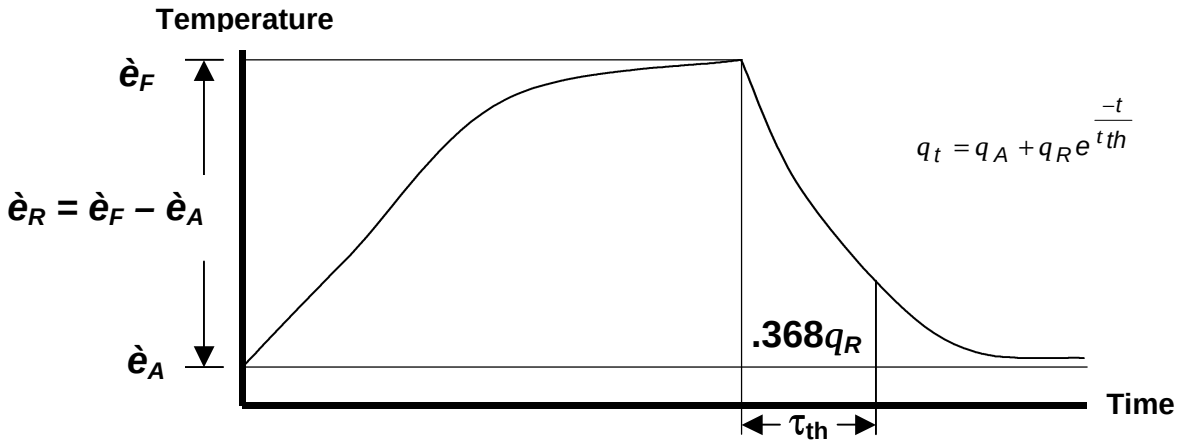

Figure 31 — Clarification of test procedure quantities

a) Apply a current equal to or less than rated current to the motor under test and allow it to reach thermal equilibrium;

b) Determine temperature rise ($è_R$) by monitoring the change in terminal resistance per the method in 4.3.3.2, 4.3.3.3, or 4.4.1.1;

c) Multiply $è_R$ by 0.368 and add the result to the ambient temperature;

d) Remove power from the motor under test, with the blower motor remaining operational, and record the time (t) it takes for the temperature to fall to the value calculated in (c);

e) Calculate the power loss (P_{loss}) using the formula

$$P_{loss} = (I^2)(R)$$

where

I is the applied current;

R is the winding resistance at $è_F$ (true for most motors).

f) Install motor under test to the dynamometer per Figure 32 or 33; for stepping and brushless servo motors, the dynamometer need not be coupled to the motor shaft;

g) Measure the motor terminal resistance and record;

h) Connect the thermocouples to the motor frame;

i) For stepping and brushless servo motors, put the motor into a locked rotor mode and apply the power source to two of the three motor terminals if the motor is a three-phase configuration, or to two windings in parallel if the motor is a two-phase configuration; for brush-type servo and large motors, adjust the motor speed to between 5 rpm and 10 rpm;

Copyright National Electrical Manufacturers Association
Provided by IHS under license with NEMA
No reproduction or networking permitted without license from IHS
Not for Resale

j) For stepping and brushless servo motors, adjust the current of the power source to the continuous maximum value as specified by the manufacturer; for brush-type servo and large motors, adjust the dynamometer load to cause motor current to reach its rated continuous value as specified by the manufacturer, readjust the input voltage to maintain the speed setting, and record the values of the motor current and voltage;

k) Maintain constant power into the motor windings and allow the motor frame temperature to rise (note that as terminal resistance rises, the current decreases);

l) When the motor frame temperature has stabilized for 15 to 30 minutes, disconnect the power source from the windings and measure the terminal resistance;

m) Calculate the winding temperature using the formula in 4.3.3.3.1;

n) Calculate the thermal resistance (frame to ambient) using the formula

$$R_{th} = \frac{q_f - 25}{heating\ \ power}$$

where

$è_f$ is the motor frame final temperature, in °C;

R_{th} is the thermal resistance, in °C/watt;

o) Calculate the thermal resistance (winding to ambient) using the formula

$$R_{th} = \frac{q_w - 25}{heating\ \ power}$$

where

$è_w$ is the final winding temperature, in °C;

R_{th} is the thermal resistance, in °C/watt.

4.1.4.4.4 Acceptance criteria

The acceptance criteria shall be determined by the manufacturer.

4.1.4.5 Continuous operating area/maximum continuous output power

4.1.4.5.1 Mounting configurations for servo motors

Motors shall be mounted in their normal mounting configuration. Foot-mounting motors are mounted by the feet. Face- or flange-mounting motors are mounted by the mounting face or flange.

Foot-mounting motors are mounted to any type or size of mounting base.

--`,,`,,`-`-`,,`,,`,`,,`---

Copyright National Electrical Manufacturers Association
Provided by IHS under license with NEMA
No reproduction or networking permitted without license from IHS
Not for Resale

For face- or flange-mounting motors, the motor shall be mounted to a standard mounting plate that shall be thermally separated from the motor support bracket. See Figures 32 and 33 for typical mounting configurations.

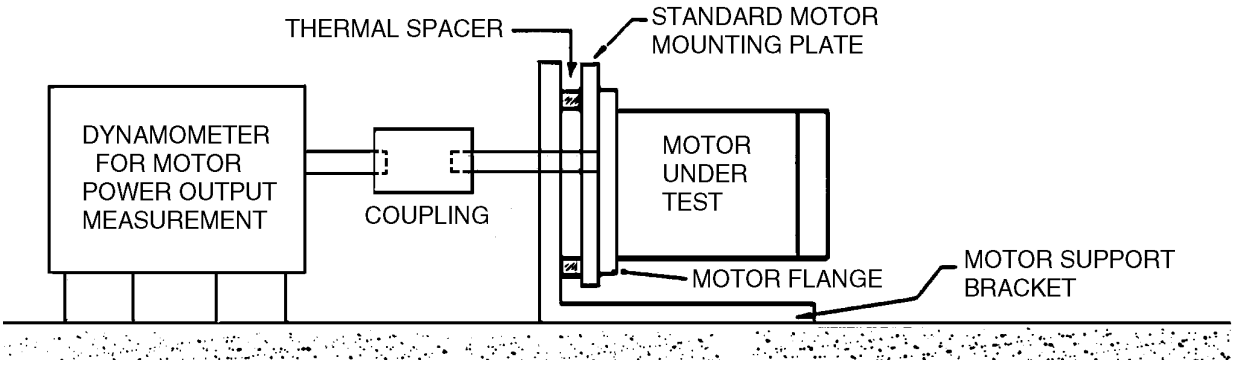

Figure 32 — Flange mounted motor test configuration

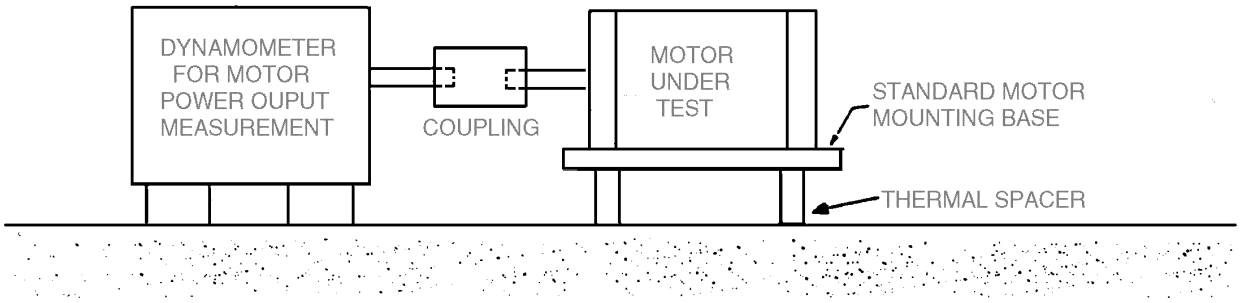

Figure 33 — Foot mounted motor test configuration

Motor mounting plates for thermal testing may be either square or round and shall have an area not greater than four times that of the motor frame dimensions (in Table 3 and Figure 19, see P dimension for round motors, BD dimension for square motors).

For motors weighing less than 18 kg (40 pounds), mounting plates may be made of aluminum.

4.1.4.5.2 Preparation for test

Mount motor as in Figure 34. The coupling shall be of a flexible disc type to minimize heat transfer from the motor shaft to the dynamometer. Use standardized mounting configuration.

Copyright National Electrical Manufacturers Association
Provided by IHS under license with NEMA
No reproduction or networking permitted without license from IHS
Not for Resale

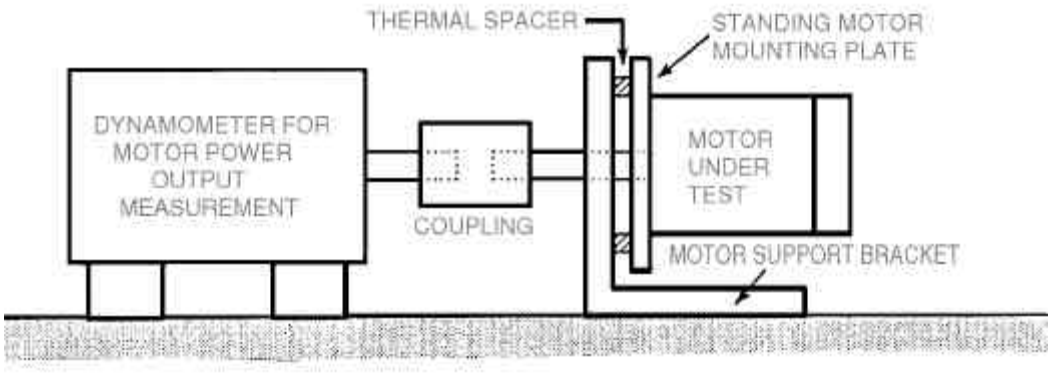

Figure 34 — Flange mounted motor test configuration

4.1.4.5.3 Test procedure

a) Measure the winding resistance. With the motor running at 1 to 5 rpm, gradually increase the armature current until the motor temperature stabilizes at the maximum continuous operating temperature. Record the measured load torque and armature current and winding resistance. Record ambient temperature after each test cycle.

b) Repeat (a) at a minimum of five additional speeds up to a point where the measured load torque for temperature stability at rated motor temperature decreases to a value of about 20 percent of the torque measured in (a). In no case during the test procedure should the combination of torque and speed exceed either the commutation limits or mechanical constraints of the motor.

c) Plot torque versus speed adjusted for rated ambient temperature. This curve defines the continuous operating area.

d) Calculate power output (P_{out}) at the test speeds (S) using one of the following formulae:

$P_{out} = (S)(T) / 84.5$ where torque (T) is in lb-in,

or

$P_{out} = (S)(T) / 9.55$ where torque (T) is in N-m.

e) Plot a curve of power versus speed for the results in (d) above.

f) The maximum continuous power output is defined as the peak value of power from the curve in (e) above.

4.1.4.5.4 Calculation of the continuous operating area for a different ambient or operating temperature or both

a) The continuous operating area for a different ambient operating temperature or both may be calculated using the following values from prior tests:

Copyright National Electrical Manufacturers Association
Provided by IHS under license with NEMA
No reproduction or networking permitted without license from IHS
Not for Resale

$è_F$ the final test temperature (hot);

$è_A$ the ambient test temperature;

R_f the hot terminal resistance;

I_f the amperes at hot test point;

R_{th} the thermal resistance, in ºC/watt at low speed test point;

K_T the torque constant at final temperature ($è_F$).

b) The new peak continuous torque at any speed is calculated as follows (the nomenclature is the same as [a] except new values are indicated by "′ "; e.g. the new final temperature is θ'_F):

old watts loss: $P_{loss} = (q_F - q_A) / R_{th};$

new watts loss: $P'_{loss} = (q'_F - q'_A) / R_{th};$

new hot winding resistance: $R'_f = R_f (K + q'_F) / (K + q_F)$ where K = 234.5 for copper.

Find the new hot K'_T from the procedure in 4.4.1.2.4.

c) At a given speed, the rotational losses can be assumed to be constant over a considerable temperature range. All of the change in watts loss should then be accounted for by a change in winding losses. Thus,

$$P'_{loss} - P_{loss} = \left[(I'_f)^2 (R'_f) - (I_f)^2 (R_f) \right] (K_1)$$

where K_1 = 1.0 for brush type and trapezoidal-driven brushless motors, or 1.5 for three phase sinusoidally driven motors.

Therefore,

$$I'_f = \left[(P'_{loss} - P_{loss}) / K_1 + (I_f)^2 (R_f) \right] (R_f)$$

and the new torque is:

$$T' = (K'_T) (I'_f)$$

Performing this calculation for each test point defines the new continuous operating area.

4.1.4.5.5 Acceptance criteria

The acceptance criteria shall be determined by the manufacturer.

Copyright National Electrical Manufacturers Association
Provided by IHS under license with NEMA
No reproduction or networking permitted without license from IHS
Not for Resale

4.2 Requirements common to all servo motors

4.2.1 Nameplate markings

4.2.1.1 Minimum nameplate information

4.2.1.1.1 For motors with a diameter of 75 mm (3 inches) or greater

The minimum standard nameplate information for brush or brushless servo motors with an AC dimension (see Table 3 and Figure 19) of 75 mm (3 inches) or greater shall be as follows:

a) manufacturer's name;
b) manufacturer's model number (includes motor type identification such as a.c. or d.c.);
c) manufacturer's serial number or date code;
d) maximum continuous stall torque at specified °C ambient;
e) maximum continuous rms amperes at specified °C ambient;
f) maximum continuous output power (kW) at specified °C ambient;
g) nominal voltage;
h) maximum allowable speed.

4.2.1.1.2 For motors with a diameter less than 75 mm (3 inches)

The minimum standard nameplate information for brush or brushless servo motors with an AC dimension (see Table 3 and Figure 19) of less than 75 mm (3 inches) shall be as follows:

a) manufacturer's name;
b) manufacturer's model number (includes motor type identification such as a.c. or d.c.);
c) manufacturer's serial number or date code.

4.2.1.2 Motor data sheet

A data sheet shall be provided with the data shown in 4.2.1.2.1 and, optionally, in 4.2.1.2.2. All nominal values and tolerances or maximum values shall be specified.

4.2.1.2.1 Required data sheet information

The data sheet shall contain the minimum nameplate information as specified in 4.2.1.1.1, plus the following information:

a) drawings showing motor dimensions, mounting, outline, and endplay;
b) weight;
c) thermal time constant;
d) torque constant at 25°C (77°F);
e) counter EMF constant at 25°C (77°F);
f) line-to-line armature resistance at 25°C (77°F);
g) rotor inertia;
h) R_{th} in °C/watt;
i) insulation class;
j) maximum winding temperature;
k) inductance;

Copyright National Electrical Manufacturers Association
Provided by IHS under license with NEMA
No reproduction or networking permitted without license from IHS
Not for Resale

l) motor connections;
m) operating ambient temperature range;
n) peak current;
o) IP number (degree of protection);
p) electrical time constant;
q) mechanical time constant;
r) terminal resistance at 25°C (77°F);
s) maximum allowable intermittent volts (brush type only).

4.2.1.2.2 Optional data sheet information

Optional data sheet information may be:

a) maximum static friction (breakaway) torque;
b) maximum coulomb friction torque;
c) maximum viscous damping torque;
d) maximum cogging torque;
e) radial load capability versus distance from mounting face, and axial load capability;
f) thermal protection device and its rating;
g) on motors with integral brakes or accessories (i.e. enclosed in the motor housing), the release voltage and tolerance, torque rating, current requirement, and response time with a specified control circuit;
h) peripheral connections such as Hall effect devices, tachometers, encoders, resolvers, or brakes.

4.2.2 Maximum allowable winding temperature rating

The maximum allowable winding temperature for servo motors may be limited by the class of insulation used, or it may be limited to a lower value to protect magnets, mechanical structures, or attached feedback devices. The limiting temperatures based on class of insulation shall be determined from one of the following tables:

a) For brush type d.c. servo motors, excluding moving coil motors, and for brushless d.c. motors with stator windings on the inner member, the temperature rise limit based on insulation class shall not exceed that shown in Table 17 (temperatures shall be determined in accordance with ANSI/IEEE 113);

b) For brushless d.c. motors with the windings on the outer member, moving coil d.c. motors, and induction servo motors, temperature limit based on insulation class shall not exceed that shown in Table 18 (temperatures shall be determined in accordance with ANSI/IEEE 112, except for moving coil motors which shall be determined in accordance with ANSI/IEEE 113).

Copyright National Electrical Manufacturers Association
Provided by IHS under license with NEMA
No reproduction or networking permitted without license from IHS
Not for Resale

Table 17 — Brush type d.c. motors with all enclosures

Class of insulation system:	A	B	F [a]	H [a]
Time rating:	Continuous			
Temperature [b], °C:				
1. Armature windings, by resistance method	110	140	170	195
2. Armature windings, by alternative method	110	130	155	180
The temperatures attained by cores, commutators, and miscellaneous parts (such as brushholders, brushes, pole tips) shall not damage the insulation or the machine in any respect.				
[a] Where a class F or H insulation system is used, special consideration should be given to factors such as bearing temperatures and lubrication. [b] Temperature values are based on operation at altitudes of 1000 meters (3300 feet) or less. See 4.1.1.2 for temperature rises for motors intended for operation at altitudes above 1000 meters (3300 feet).				

Table 18 — Brushless d.c. motors with all enclosures

Class of insulation system:	A	B	F [a]	H [a]
Time rating:	Continuous			
Temperature [b,c], °C:				
1. Windings, by resistance method	110	130	155	180
The temperatures attained by cores, squirrel-cage windings, commutators, collector rings, and miscellaneous parts (such as brushholders, brushes, pole tips, uninsulated shading coils) shall not damage the insulation or the machine in any respect.				
[a] Where a class F or H insulation system is used, special consideration should be given to bearing temperatures, lubrication, etc. [b] The foregoing values of temperature are based on operation at altitudes of 1000 meters (3300 feet) or less. For temperature rises for motors intended for operation at altitudes above 1000 meters (3300 feet), see 4.1.1.2. [c] When a higher ambient temperature than 40ºC (104 °F) is required, preferred values of ambient temperature are 50ºC (122 °F), 65ºC (149 °F), 90ºC (194 °F), and 115ºC (239 °F).				

4.2.3 Functional tests and performance

4.2.3.1 Cogging torque

4.2.3.1.1 Measurement

Cogging torque shall either be measured by the torque wrench method (see 4.2.1.2) or the torque transducer method (see 4.2.1.3). The torque wrench method is typically used on motors whose cogging torque is much greater than the static friction. All measurements are made with no power applied to the motor under test, the motor leads open, and the motor at 25°C ± 5°C.

4.2.3.1.2 Torque wrench method

Rotate the motor shaft through one complete revolution with a torque wrench. Record the peak-to-peak value measured with the torque wrench. This is the cogging torque.

--`,,`,,`-`-`,,`,,`,`,,`---

Copyright National Electrical Manufacturers Association
Provided by IHS under license with NEMA
No reproduction or networking permitted without license from IHS
Not for Resale

4.2.3.1.3 Torque transducer method

Rotate the motor shaft at 3 rpm or less with a torque transducer connected between the motor under the test and the driver. Record the peak-to-peak value measured with the torque transducer. The cogging torque is the measured peak-to-peak value.

4.2.3.1.4 Acceptance criteria

The acceptance criteria shall be determined by the manufacturer.

4.2.3.2 Friction torque and viscous damping

4.2.3.2.1 Test description

Friction torque (T_f) and viscous damping factor (D) shall be determined by measuring the torque required to drive the motor under test at 30 rpm, half maximum continuous speed, and maximum continuous speed. The torque versus speed shall be plotted as a best fit straight line on a graph. The Y intercept is the friction torque and the slope is the viscous damping factor. See Figure 35.

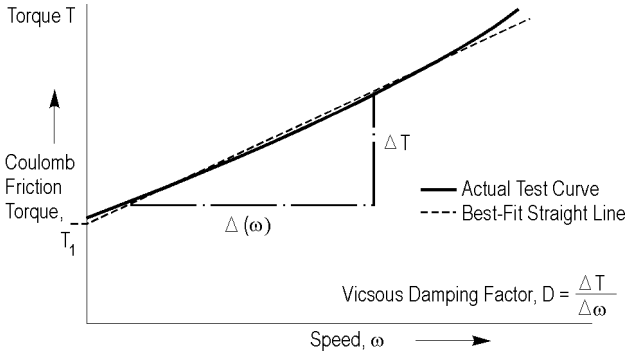

Figure 35 — Friction torque and viscous damping

A preferred method is to drive the motor under test with an external motor and use a torque transducer to measure the required torque (see Figure 36).

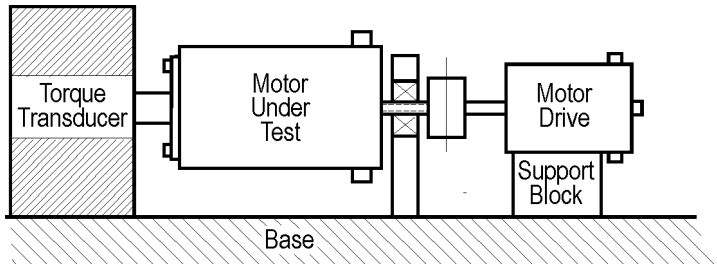

Figure 36 — Viscous Damping test layout

Copyright National Electrical Manufacturers Association
Provided by IHS under license with NEMA
No reproduction or networking permitted without license from IHS
Not for Resale

4.2.3.2.2 Acceptance criteria

The acceptance criteria shall be determined by the manufacturer.

4.2.3.3 Torque ripple

4.2.3.3.1 Measurement

Torque ripple is a system characteristic. It is measured with the servo motor under test energized by a specified controller to the maximum continuous stall torque level. This minimizes measurement errors due to cogging torque.

4.2.3.3.2 Procedure

Apply a constant current sufficient to develop maximum continuous stall torque to the motor using a specified controller. Drive the shaft of the servo motor under test through a torque transducer at 3 rpm or less in a direction that opposes the developed torque of the motor under test (see Figure 37).

The torque ripple is:

$$\frac{\textit{peak-to-peak torque amplitude}}{\textit{average torque}}$$

Care should be taken to differentiate between true torque ripple and possible commutation spikes. This procedure defines a measurement technique for torque ripple. In some cases it will be necessary to also specify the peak-to-peak value of commutation spikes and the bandwidth of the measuring apparatus.

Measurement techniques described in ANSI/IEEE 115 shall apply.

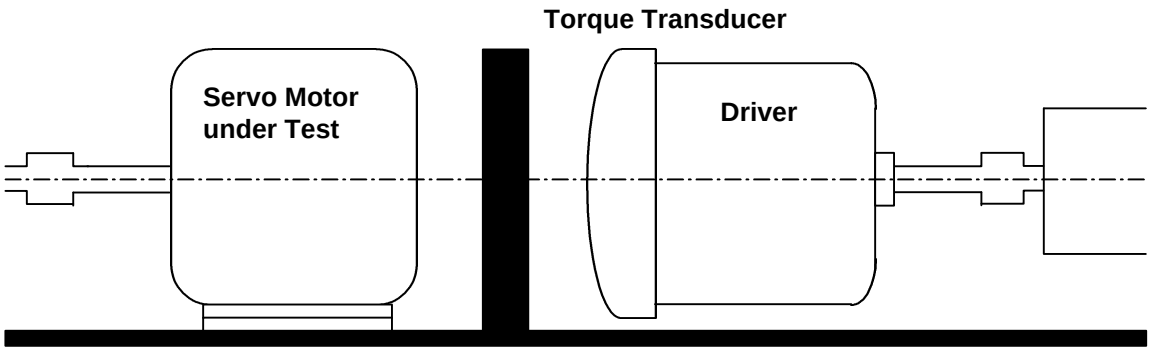

Figure 37 — Torque ripple test set-up

4.2.3.3.3 Acceptance criteria

The acceptance criteria shall be determined by the manufacturer.

Copyright National Electrical Manufacturers Association
Provided by IHS under license with NEMA
No reproduction or networking permitted without license from IHS
Not for Resale

4.2.3.4 Back EMF constant

4.2.3.4.1 Procedure

The following test procedure shall apply.

a) The motor is to be mounted by normal mounting means (see Figure 38).

b) Power is applied to constant speed drive motor and motor is allowed to stabilize at desired speed.

c) Measure induced voltage in test motor.

d) For brush commutated motors, measure d.c. average voltage. For brushless motors, measure the peak voltage.

e) Compute back EMF per the formula:

$$K_E = \frac{measured\ volts}{0.1047 rpm}$$ where K_E is in V-s/rad,

or

$$K_E = \frac{(measured\ volts)(1000)}{rpm}$$ where K_E is in V/krpm.

NOTE Peak voltage is used for brushless motors because the wave shape is not always pure sinusoidal.

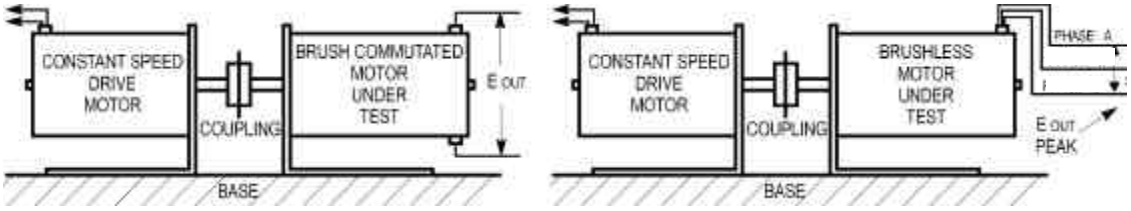

Figure 38 — Back EMF constant motor running

4.2.3.4.2 Acceptance criteria

The acceptance criteria shall be determined by the manufacturer.

4.2.3.5 Maximum volts and maximum speed

4.2.3.5.1 Purpose and procedure

The purpose of this test is to ensure that the servo motor can operate with the maximum applied voltage and achieve its maximum speed safely.

Copyright National Electrical Manufacturers Association
Provided by IHS under license with NEMA
No reproduction or networking permitted without license from IHS
Not for Resale

The test procedure is to apply the maximum voltage to the motor from a current-limited power supply so that current does not exceed the peak current. Accelerate the motor to maximum speed in one direction and while operating at that speed reverse the polarity of the applied voltage and allow the motor to reach maximum speed in the opposite direction.

4.2.3.5.2 Acceptance criteria

The acceptance criteria shall be determined by the manufacturer.

4.3 Requirements common to stepping motors

4.3.1 Nameplate markings

4.3.1.1 Standard nameplate information

The manufacturer's name and manufacturer's type number shall be marked on stepping motor nameplates. In addition, the data in Table 19 shall be marked on stepping motor nameplates.

Table 19 — Stepping motor nameplate codings

NEMA Code	Description	Example
To be coded:		
DD	Diameter [a], inches x 10 (nominal)	34 = 3.4 in
MM	Mounting Code	D-flange; C-face
LLL (optional)	Length [a], inches x 10 (LB dimension in Table 3)	016 = 1.6 in
To be coded or individually marked:		
CCC	Phase current [a], amps x 10, rated for 2 phase-on operation	016 = 1.6 amps
I	Insulation class (NEMA definition)	B
VVV	Phase voltage rating [a] x 10	053 = 5.3 volts
SSS	Steps per revolution	200
W (optional)	Winding code	See 4.3.1.2

[a] Quantities expressed with one place after the decimal point.

See examples of nameplate codings in Table 20.

Table 20 — Examples of stepping motor nameplate codings

	Description	Coding
1.	3.4” dia., D-flange	34D
2.	4.2” dia., D-flange with C-face tapped holes	42CD
3.	2.3” dia., D-flange, 1.6” long	23D016
4.	2.3” dia., D-flange, 1.6” long, 1.6A, Class B, 5.3V, 200 steps per revolution, winding connection A	23D016—016B053200A [a]

[a] A dash (—) is used to separate mounting characteristics from other data.

Copyright National Electrical Manufacturers Association
Provided by IHS under license with NEMA
No reproduction or networking permitted without license from IHS
Not for Resale

4.3.1.2 Winding codes

When stepping motors use a winding code on the nameplate marking to identify external connections, the letter symbol assignment shall be determined from the diagrammatic arrangement in Figure 39.

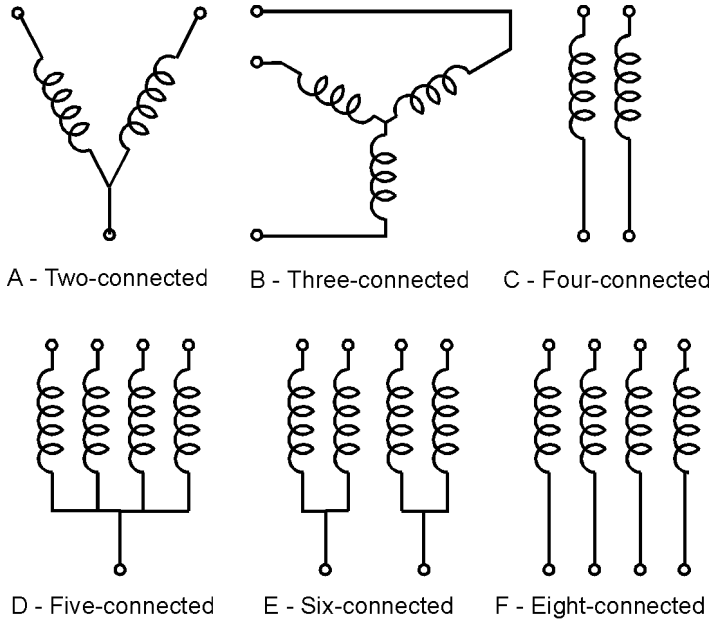

NOTE "—o" indicates an external connection.

Figure 39 — Winding codes

4.3.2 Maximum allowable winding temperature rating

The maximum allowable winding temperature for stepping motors shall not exceed the values given in Table 21 when tested for rated current in accordance with 4.3.3.1.

Table 21 — Insulation system classification

Class	Maximum allowable winding temperature
A	105ºC
B	130ºC
F	155ºC
H	180ºC

Copyright National Electrical Manufacturers Association
Provided by IHS under license with NEMA
No reproduction or networking permitted without license from IHS
Not for Resale

4.3.3 Functional tests and performance

4.3.3.1 Rated current

4.3.3.1.1 Procedure

Rated current for stepping motors shall be determined by applying direct current from a suitable constant current supply, the ripple content of which has no perceptible effect on heating, that will maintain the output current within ± 1 percent to the specified winding and will result in a maximum winding temperature at thermal equilibrium in accordance with Table 21. If multiple windings are specified, they shall be connected in series for this test. The motor shall be suspended horizontally in a 25°C (77°F) ambient without external heatsinking and no auxiliary cooling for this test.

4.3.3.1.2 Acceptance criteria

The acceptance criteria shall be determined by the manufacturer based on a 40°C ambient temperature and the insulation system.

4.3.3.2 Terminal resistance

4.3.3.2.1 Procedure

The terminal resistance of brushless stepping motors shall be measured, using techniques specified in IEEE 115, as follows:

a) measure resistance between each pair of leads or terminals using a four-terminal Kelvin Bridge (for resistance values of 1 ohm or less), or a Wheatstone Bridge (for resistance values greater than 1 ohm), having an accuracy of ± 1% or better;

b) measure motor frame temperature at the end of the test;

c) Calculate the resistance at 25°C using the following formula:

$$R_{25} = \left(\frac{K+25}{K+q} \right) R_T$$

where

R_T is the resistance at temperature T, in ohms;

K equals 234.5 for copper;

$è$ is the motor frame temperature at end of test, in °C.

4.3.3.2.2 Acceptance criteria

The acceptance criteria shall be determined by the manufacturer.

Copyright National Electrical Manufacturers Association
Provided by IHS under license with NEMA
No reproduction or networking permitted without license from IHS
Not for Resale

4.3.3.3 Winding temperature

4.3.3.3.1 Procedure

Consistent with ANSI/IEEE 113, the winding temperature of stepping motors shall be determined by measurement of the winding resistance change under the specified test current and mounting conditions according to the formula:

$$q_h = \left(\frac{R_h}{R_c}\right)(K + q_{ac}) - K$$

where

$è_h$ is the temperature of energized winding (final);

R_h is the resistance at final temperature $è_h$, in ohms;

$è_{ah}$ is the ambient temperature at the end of the heat run in the vicinity of the motor;

$è_{ac}$ is the initial ambient temperature in the vicinity of the motor;

R_c is the cold resistance at temperature $è_{ac}$, in ohms (the temperature of the motor shall be allowed to stabilize at $è_{ac}$ prior to measurement of R_c);

K equals 234.5 for copper.

Also, the winding temperature rise ($è_{WR}$) above ambient temperature ($è_{ah}$) shall be calculated using the following formula:

$$q_{WR} = \left(\frac{R_h}{R_c}\right)(K + q_{ac}) - (K + q_{ah})$$

All temperatures are in degrees Celsius. The measurement shall be made in accordance with the test procedure in 4.3.3.2. Rapid transfer from the power source to the resistance measuring device shall be made to avoid error due to motor cooling.

Errors due to rapid cooling may be avoided by plotting a cooling curve of resistance versus time and extrapolating to zero time. (Zero time is the time when power was removed from the motor.)

4.3.3.3.2 Acceptance criteria

The acceptance criteria shall be determined by the manufacturer.

4.3.3.4 Holding torque

4.3.3.4.1 Procedure

Holding torque for stepping motors shall be measured with rated current applied through two phases in series. The peak resistance to rotation is measured by slowly rotating a torque wrench or other suitable torque transducer applied to the motor shaft. The holding torque is the minimum value observed through the full rotation of the shaft in either direction.

Copyright National Electrical Manufacturers Association
Provided by IHS under license with NEMA
No reproduction or networking permitted without license from IHS
Not for Resale

For rating purposes, the motor should be allowed to reach thermal equilibrium at the test current prior to measurement.

4.3.3.4.2 Acceptance criteria

The acceptance criteria shall be determined by the manufacturer.

4.3.3.5 Detent torque

4.3.3.5.1 Procedure

Detent torque for stepping motors shall be measured in the same manner as holding torque except the phases are open-circuited. For rating purposes, the motor temperature should be stabilized at 25º C (77 °F) prior to measurement.

4.3.3.5.2 Acceptance criteria

The acceptance criteria shall be determined by the manufacturer.

4.3.3.6 Winding inductance

4.3.3.6.1 Inductance bridge method for rated values

This method shall be used to determine the value of winding inductance for catalog rating purposes. The following procedure shall apply:

a) pre-position the rotor to establish tooth alignment by passing rated current from a suitable d.c. source through the winding to be measured and lock the rotor in place;

b) disconnect the current source and measure the inductance of the winding used in (a) with a suitable bridge with 1 kHz at 1 V rms applied to the winding under test (see Figure 40);

c) other windings shall be measured by repeating (a) and (b).

NOTE When the inductance value with the winding energized is required, the d.c. source should remain connected and the winding current adjusted to the desired level. When the inductance bridge is connected to the same winding, a suitable blocking capacitor should be used to protect the inductance bridge from the d.c. current source.

Copyright National Electrical Manufacturers Association
Provided by IHS under license with NEMA
No reproduction or networking permitted without license from IHS
Not for Resale

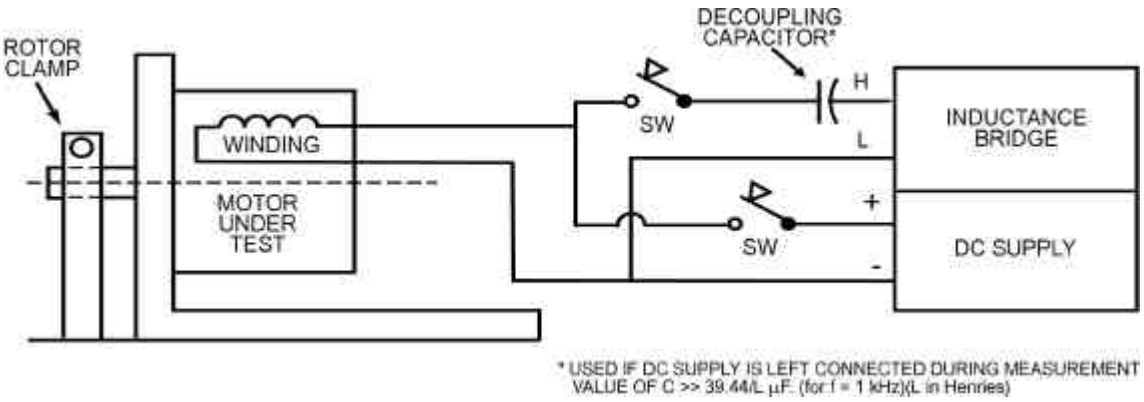

Figure 40 — Test circuit for inductance bridge method

4.3.3.6.2 Current change method for design values

This method shall be used to provide winding inductance values for design related purposes. The following procedure shall apply:

a) pre-position the rotor to establish tooth alignment by rated current from a suitable d.c. source through the winding to be measured and lock the rotor in place;

b) connect the winding to be measured to a suitable d.c. power source as shown in Figure 41 and adjust the output of the power source to provide 10 percent rated current to the winding;

c) actuate Switch 1 and read the current decay on the oscilloscope across R_2;

d) calculate the incremental inductance of the winding for any part of the curve according to the following formula:

$$L = \frac{(-R)(t)}{ln\left(\frac{i}{I}\right)}$$

where

L is the incremental inductance, in henries;

R is the circuit resistance ($R_w + R_2$), in ohms;

i is the initial (time = zero) current, in amps;

t is the time when current = i, in seconds;

ln is the natural logarithm;

I is the current at time t.

Copyright National Electrical Manufacturers Association
Provided by IHS under license with NEMA
No reproduction or networking permitted without license from IHS
Not for Resale

At the time when $i = 0.37 \times I$ (63 percent of total change), $L = (R)(t)$

Switch 1 is a make-before-break switch. Therefore, SW1A is normally open and SW1B is normally closed.

NOTE The value of *R* Limit in Figure 41 will provide the current limit when switch SW1A is actuated prior to switch SW1B opening. Current is monitored across the resistor, R_2.

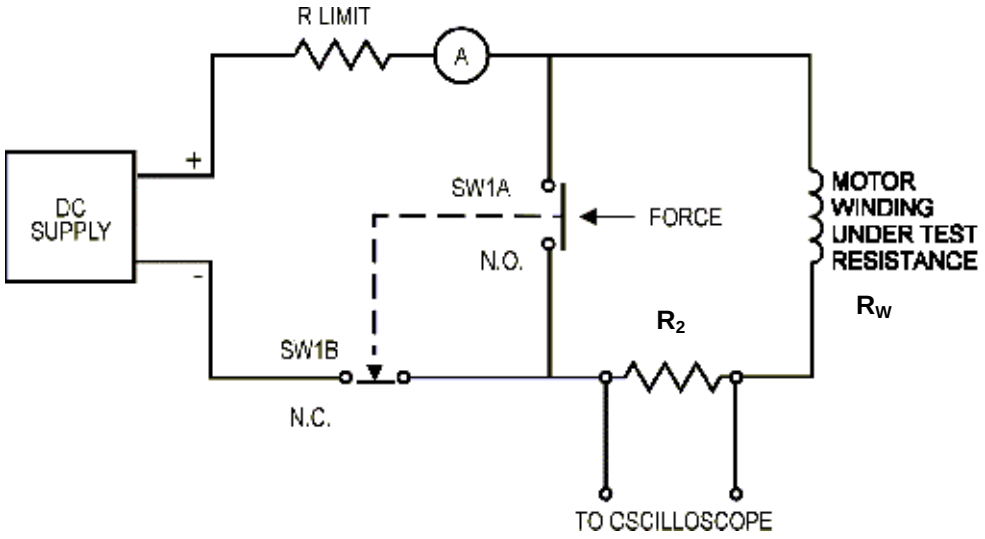

Figure 41 — Test circuit for current change method

4.3.3.6.3 Acceptance criteria

The acceptance criteria shall be determined by the manufacturer.

4.3.3.7 Single step response

4.3.3.7.1 Procedure

The single step response, which is controller dependent, shall be measured as follows.

a) Couple a continuous rotation-film potentiometer whose inertia is less than 1/10 the rotor inertia to the motor shaft.

b) The coupling to the potentiometer shall be torsionally rigid but radially and axially flexible.

c) Connect the terminals of the fixed potentiometer element to a filtered d.c. power supply.

d) Connect the wiper arm of the potentiometer and one terminal of the fixed element to the vertical displacement terminals of the oscilloscope. Set the horizontal displacement for displaying "time."

e) Energize the motor with rated current from an appropriate controller and command it to take one step. The resultant display will be the single step response of the motor (see Figure 4). The settling time is determined by the point at which the peak of the oscillation of the rotor has diminished to within 10 percent of the step angle displacement.

Copyright National Electrical Manufacturers Association
Provided by IHS under license with NEMA
No reproduction or networking permitted without license from IHS
Not for Resale

4.3.3.7.2 Acceptance criteria

The acceptance criteria shall be determined by the manufacturer.

4.3.3.8 Pull-out torque

4.3.3.8.1 Test set-up

The test set-up shall be as follows.

a) Couple the output shaft to the torque measurement system. Couplings, e.g. bellows type or the equivalent, should be rigid for rotational forces, but allow flexibility for alignment and shaft runout (see Figure 42). The couplings shall have an inertia that is ≤ 10 percent of the rotor inertia.

b) Connect the input terminals of the motor under test to the drive for which motor torque is to be determined. Adjust the motor current at standstill to its rated value or the value specified by the manufacturer.

c) Adjust the motor to the synchronous speed in steps per second for which torque is to be measured.

d) Increase the load to the motor using the brake current adjustment or equivalent control, until the motor pulls out of synchronism with the drive. This may be determined for speeds above base speed by the motor stalling and not restarting. Below base speed the motor will turn discontinuously when the pull-out torque value is reached.

e) Record the pull-out torque, speed, type drive, drive bus voltage, measurement system inertia, and motor current set in (b) above.

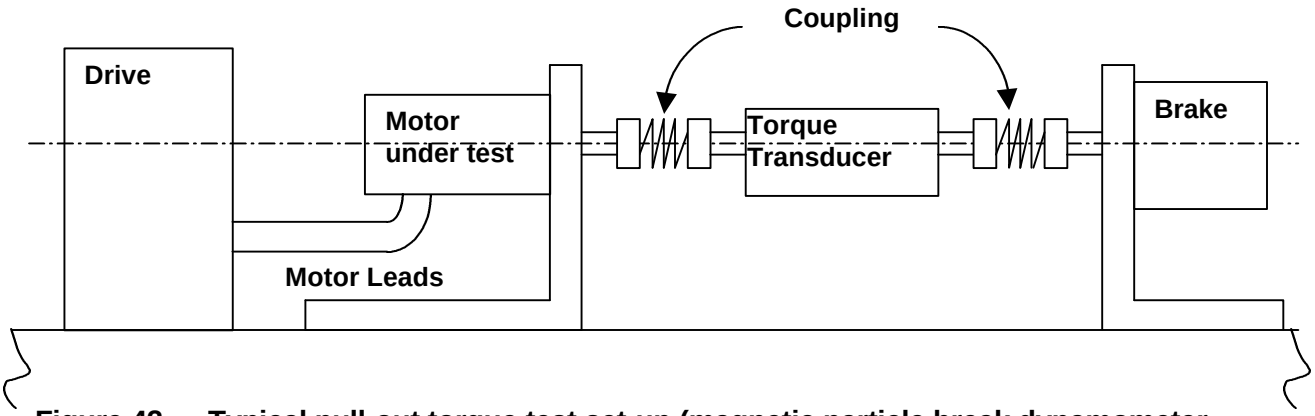

Figure 42 — Typical pull-out torque test set-up (magnetic particle break dynamometer shown)

4.3.3.8.2 Measurement systems

The pull-out torque for stepping motors may be measured in three ways: the cord and spring scale method; the hysteresis dynamometer method; or the magnetic particle brake dynamometer method. Each has advantages and disadvantages that are compared in Figure 43.

Copyright National Electrical Manufacturers Association
Provided by IHS under license with NEMA
No reproduction or networking permitted without license from IHS
Not for Resale

Pertinent parameters to be recorded during these tests are:

a) drive type;
b) drive bus voltage;
c) current delivered to the motor at standstill;
d) speed in steps per second;
e) couplings from the motor to the transducer or brake or both;
f) inertia of system coupled to the shaft;
g) torque measurement system, such as transducer and brake type.

The theoretically ideal torque measurement system would have zero inertia and be entirely passive, that is, not affect the rate of response and not interact with the motor and drive system. However, it is understood that the torque measurement system will influence the indicated torque and should therefore be documented.

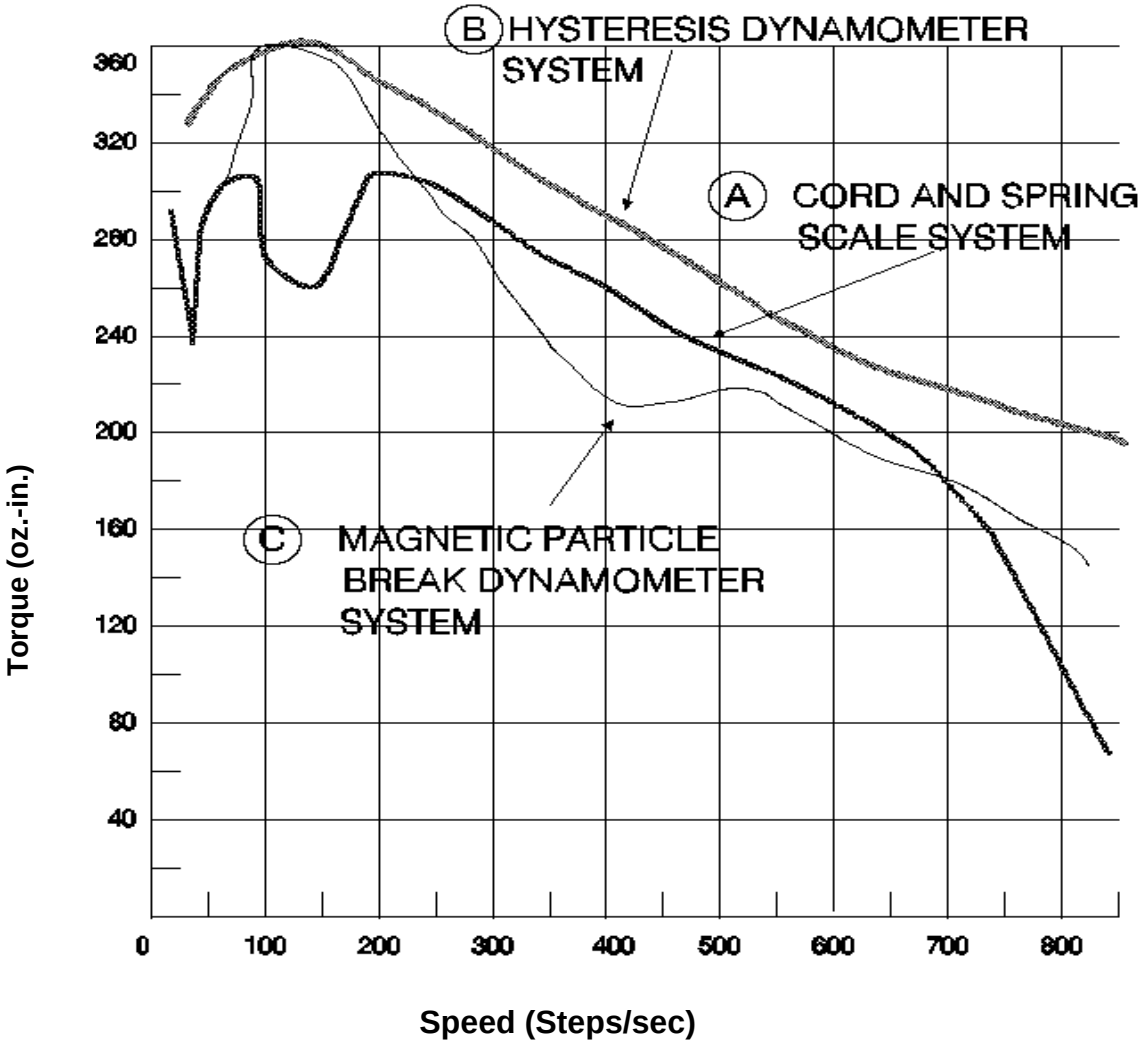

Figure 43 — Comparisons of stepping motor pullout torque measurement systems

Copyright National Electrical Manufacturers Association
Provided by IHS under license with NEMA
No reproduction or networking permitted without license from IHS
Not for Resale

4.3.3.8.3 Cord and spring scale method

The cord and spring scale method utilizes a cord wrapped on a pulley to apply frictional load and a spring scale for measurement of steady state conditions (see Figure 44).

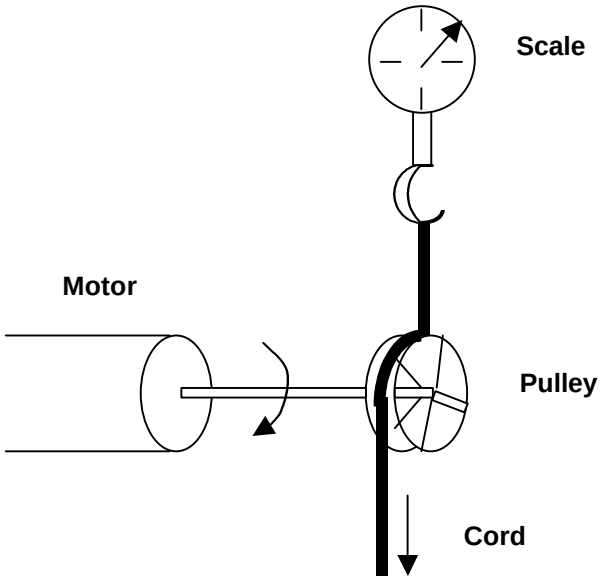

Figure 44 — Cord and spring scale

The cord and spring scale method has the following advantages.

a) It is easy to use and to calibrate. The accuracy of the system is based upon pulley diameter and scale calibration.

b) Power is dissipated as heat in the pulley. Dissipation capacity may be increased by external cooling or increasing pulley size.

c) System inertia may be controlled by the size of the pulley. The larger the pulley the greater the inertia.

However, it also has the following disadvantage: it may accentuate resonant points on the torque speed characteristic, as well as create additional resonant points.

4.3.3.8.4 Hysteresis dynamometer method

The hysteresis dynamometer method utilizes a hysteresis brake to apply frictional load and a gravity balance for measurement of torque (see Figure 45).

Copyright National Electrical Manufacturers Association
Provided by IHS under license with NEMA
No reproduction or networking permitted without license from IHS
Not for Resale

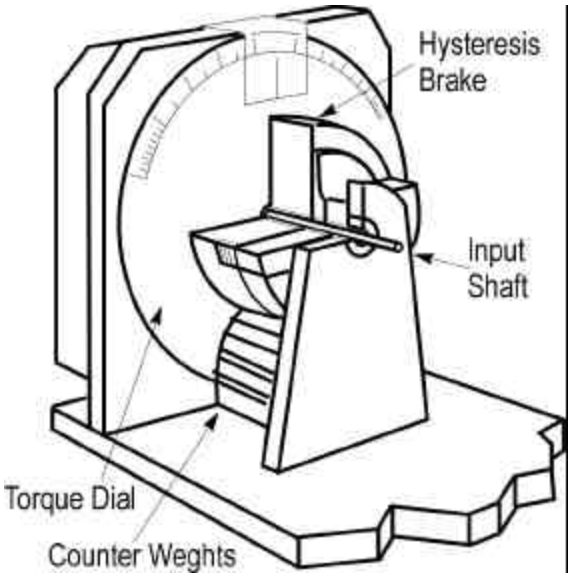

Figure 45 — Hysteresis dynamometer

The hysteresis dynamometer method has the following advantage: it is easy to use and control accurately because torque is varied by changing the current to the brake.

However, it also has the following disadvantages.

a) Power is dissipated in the brake and care must be taken to maintain operation within ratings.

b) Low speed torque may have substantial ripple due to discrete poles on rotor and stator. This may interfere with low speed data since the motor itself has an oscillatory behavior at lower step rates.

c) The rotor of the dynamometer may add considerable inertia to the system. This may shift or even hide midrange resonance effects.

4.3.3.8.5 Magnetic particle brake dynamometer method

The magnetic particle brake dynamometer method utilizes a rotor surrounded by fine magnetic particles that is enclosed in a non-rotating housing. A coil is energized to create a magnetic field which tends to solidify the particles, thus loading the rotor. The load torque is then controlled by current in the coil.

An optical torque-bar transducer (see Figure 46) provides an efficient torque measuring device for use with the magnetic particle brake. It measures transmitted torque by modulating a beam of light in proportion to the applied torque. Lamps are mounted at one end of the transducer housing and photocells at the other. Two identical discs are mounted on a pair of sleeves that are attached to opposite ends of the rotatable torsion shaft. The light from the lamp shines through the slots in the discs and impinges on the photocells, thus generating a d.c. voltage. When the shaft is twisted, the alignment of the discs changes, and the photocell output changes with it. Hence, d.c. output is directly proportional to the torque applied to the shaft.

Copyright National Electrical Manufacturers Association
Provided by IHS under license with NEMA
No reproduction or networking permitted without license from IHS
Not for Resale

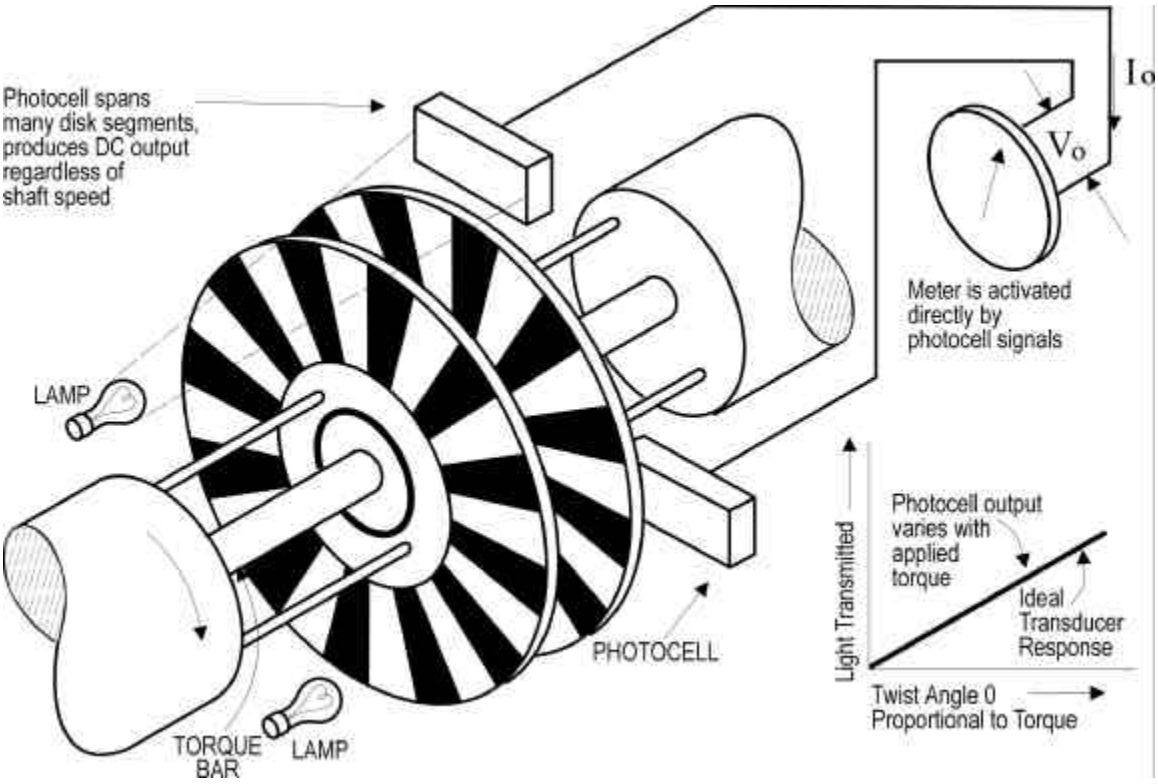

Figure 46 — Principle of the torque bar transducer

The magnetic particle brake dynamometer has the following advantages:

a) it is easy to use;

b) it provides a uniform, low inertia load that is adjustable with input current, and is capable of approaching a theoretically no-load condition;

c) it has steady state and transient capability.

The magnetic particle brake dynamometer using the torque transducer has the following disadvantages:

a) it is limited by power dissipation in the brake and may be less effective for testing large size motors;

b) friction seals on the brake produce drag, which limits low-torque data on high-torque units.

4.3.3.8.6 Acceptance criteria

The acceptance criteria shall be determined by the manufacturer.

Copyright National Electrical Manufacturers Association
Provided by IHS under license with NEMA
No reproduction or networking permitted without license from IHS
Not for Resale

4.3.3.9 Step accuracy

4.3.3.9.1 Test conditions

See Figure 47 concerning the following conditions.

a) Motor and ambient temperature shall be 25ºC ± 5ºC;

b) The flexible couplings shall be torsionally rigid but radially and axially flexible;

c) Motor phase currents shall be equal to rated current and balanced to within 1 percent of each other;

d) Tests shall be made with zero shaft load on the motor;

e) The encoder resolution shall be 10 percent of the maximum angular error expected, or finer.

EXAMPLE For a 200 step/revolution stepping motor having 3 percent accuracy, the angular measurement system shall be able to resolve the following angle:

$$(0.1)\left(\frac{360^\circ}{200}\right)(0.03^\circ) = 0.0054^\circ$$

Therefore, the minimum number of pulses/revolution from the encoder is 360/0.0054 = 66,667 pulses.

NOTE The next higher standard pulse rate for typically available encoders is 72,000 pulses per revolution.

f) The viscous damper, if required, is chosen to allow enough time between steps to ensure that motor shaft oscillations are damped before the next step is taken.

4.3.3.9.2 Procedure

Step the motor through one complete shaft revolution, measuring the maximum positive or negative deviation from the rated step angle for any adjacent step. The incremental step angle error is expressed as a percentage of the rated step angle.

4.3.4.9.3 Acceptance criteria

The acceptance criteria shall be determined by the manufacturer.

Copyright National Electrical Manufacturers Association
Provided by IHS under license with NEMA
No reproduction or networking permitted without license from IHS
Not for Resale

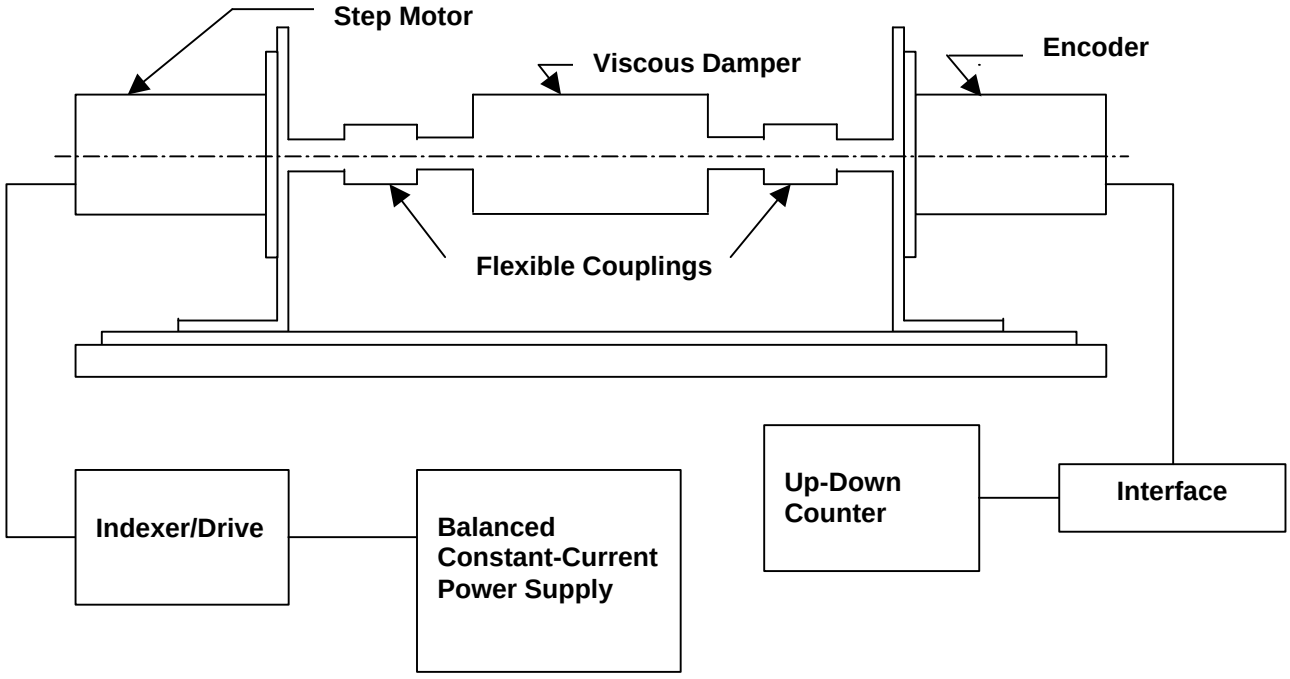

Figure 47— Test set-up for step accuracy

4.3.3.10 Electrical time constant

4.3.3.10.1 Procedure

The following test procedures for determining electrical time constant for stepping motors (see Figure 48) shall apply.

a) Pre-position the rotor to establish tooth alignment by passing rated current from a suitable d.c. source through the winding to be measured and lock the rotor in place.

b) Connect the winding to be measured (see Figure 39) to a suitable d.c. power source and adjust the output of the power source to provide 10% rated current to the winding.

c) Actuate Switch 1 and use an oscilloscope with a high speed current probe to read the decay of the current through the motor winding.

d) The electrical time constant is defined as the time it takes the current to decay to 37% of the original value. Where

I is the steady state current before switch closure

t_0 is the time when the switch is closed.

I_0 is the current at the instant the switch is closed

I_t is the measured current at any time, t.

find the time at t_0 and $I_0 = I$ at which $I_t = 0.37 \times I$. This time will be the electrical time constant (t_E).

Copyright National Electrical Manufacturers Association
Provided by IHS under license with NEMA
No reproduction or networking permitted without license from IHS
Not for Resale

Switch SW1A is a make-before-break switch. Therefore SW1A is normally open, and SW1B is normally closed.

NOTE The value of R limit in Figure 48 will provide the current limit when switch SW1A is actuated prior to switch SW1B opening.

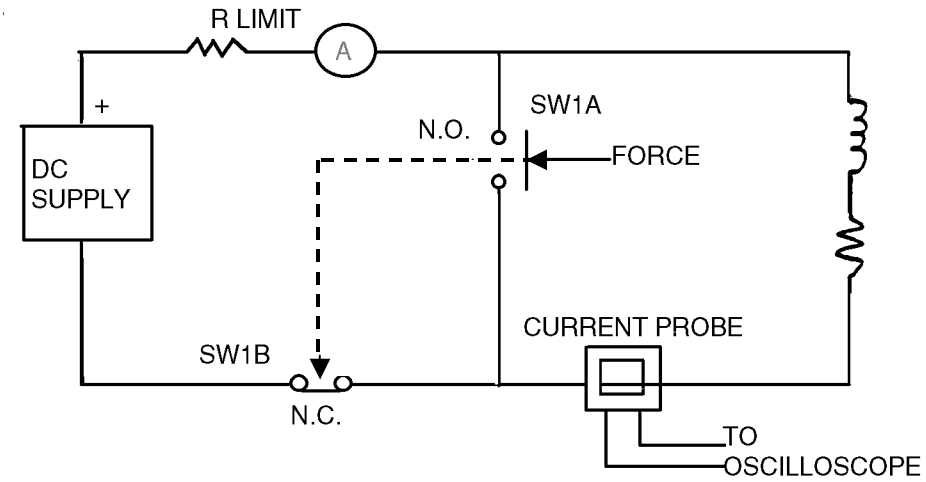

Figure 48 — Electrical time constant test circuit

4.3.3.10.2 Acceptance criteria

The acceptance criteria shall be determined by the manufacturer.

4.3.4 Alternative test method for stepping motors

This subclause describes an alternative series of tests and procedures for obtaining stepping motor data. This data can be used to model stepping motor systems or to compare the performance of various stepping motors.

The following tests and procedures shall apply for this alternative methodology.

4.3.4.1 Electrical tests

4.3.4.1.1 Winding resistance

Measure the resistance of all phase windings with the motor at an ambient temperature of 25°C. Record the resistance in Ohms. If a digital meter is used, ensure that the readings are not affected by coil inductance.

4.3.4.1.2 Winding inductance

Measure the inductance of each phase winding using an impedance bridge. The output of the bridge should be 1 volt at 1 kHz. Record the result in millihenries (mH).

Copyright National Electrical Manufacturers Association
Provided by IHS under license with NEMA
No reproduction or networking permitted without license from IHS
Not for Resale

4.3.4.1.3 Rated power dissipation

Suspend the motor in the air (no mounting plate). Using the customary connections of the motor, apply constant d.c. current to the windings. Adjust the current until the temperature rise above ambient equals 65°C when measured at the hottest spot on the motor housing, usually over the stator lamination stack or housing. Record the input power in Watts as determined from the volts and total amperes.

Mount the motor to a 250 mm x 250 mm (10 inches x 10 inches) vertical aluminum and repeat the above procedure. The rated power dissipation is the average of the two test results.

4.3.4.2 Torque measurements

4.3.4.2.1 Detent torque

This test measures the torque required to rotate the unenergized motor. Measure the torque of the motor using a test set such as the one shown in Figure 49.

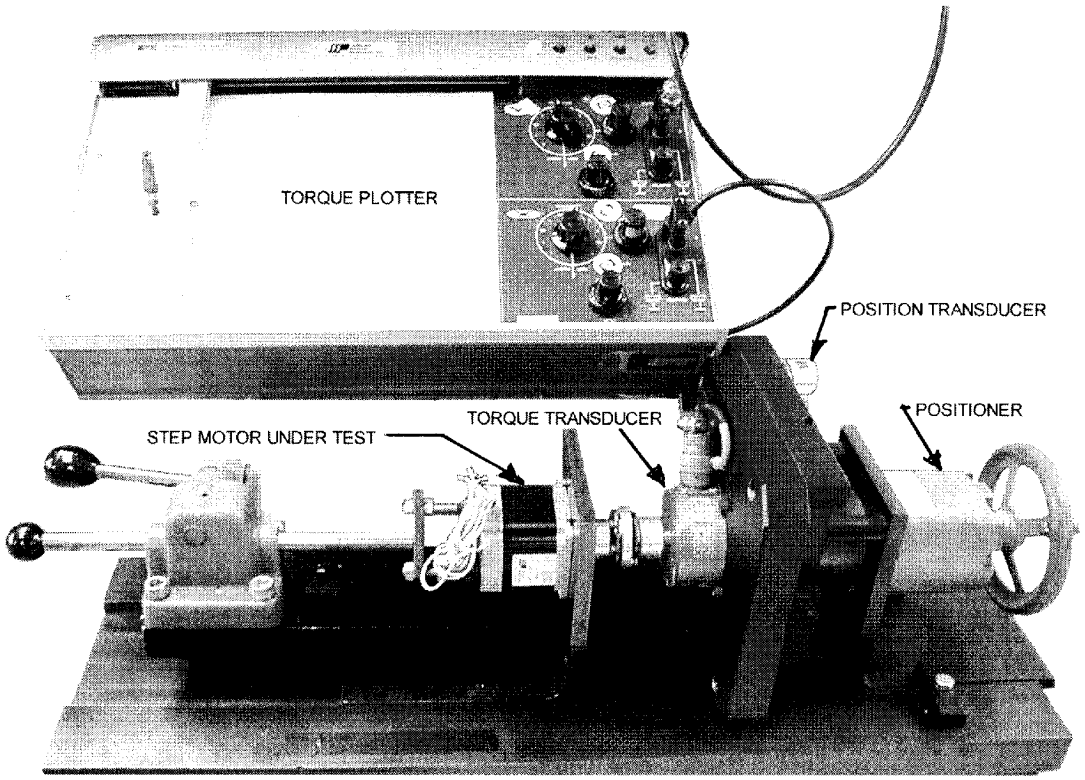

Figure 49 Typical setup for measuring holding and detent torque

Rotate the motor clockwise at least two electrical cycles (that will display at least eight cycles of the fourth harmonic detent or cogging torque) and then rotate the motor counterclockwise for approximately the same distance. Then apply a modest amount of d.c. current to one motor phase winding and rotate the motor clockwise for about two electrical cycles. A sample plot is shown in Figure 50.

Copyright National Electrical Manufacturers Association
Provided by IHS under license with NEMA
No reproduction or networking permitted without license from IHS
Not for Resale

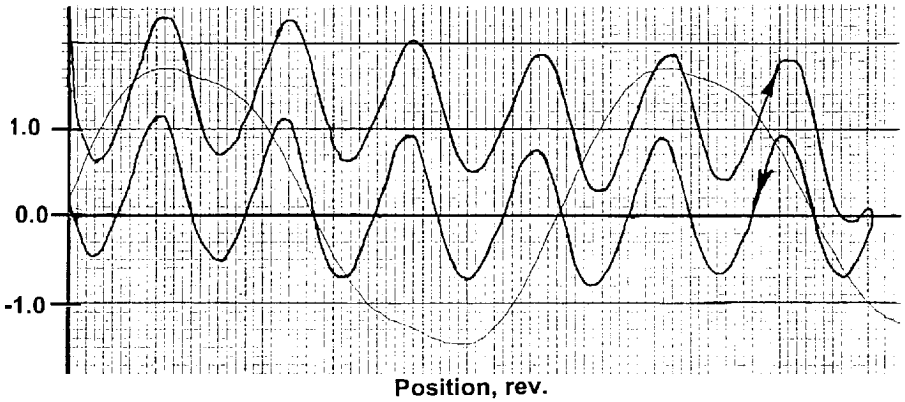

Figure 50 Typical detent torque measurement result

4.3.4.2.2 Holding torque

Determine the rated winding current from the rated power dissipation using the following formula

$$I_{rw} = \sqrt{\frac{P_d}{2R}}$$

where

I_{rw} is the rated winding current, in amps;

R is the winding resistance, in ohms;

P_d is the rated power dissipation, in watts.

EXAMPLE A size 34, single stack step motor has a rated power dissipation (W) of 16 W. If the resistance is 5 Ù, the rated winding current is 1.265 A.

Using the setup shown in Figure 48 and with the rated winding current (RWC) as a reference, take holding torque measurements at each of the following four winding current conditions:

a) one phase energized at a rated winding current of approximately 0.7 A;
b) one phase energized at a rated winding current of approximately 1.4 A;
c) two phases energized at a rated winding current of approximately 0.7 A;
d) two phases energized at a rated winding current of approximately 1.4 A.

For each condition, start at the stable detent position (zero torque) with the given winding energized and turn the rotor clockwise through one complete torque cycle. Record the maximum and minimum torque values. The plotter reading may be used as an indication of the peak torque, but the value recorded shall come from the torque sensor readout. Turn the rotor counterclockwise through the same cycle and again record the maximum and minimum torque values.

The location of the desired data points at each energization condition is shown in Figure 51.

--`,,`,,`-`-`,,`,,`,`,,`---

Copyright National Electrical Manufacturers Association
Provided by IHS under license with NEMA
No reproduction or networking permitted without license from IHS
Not for Resale

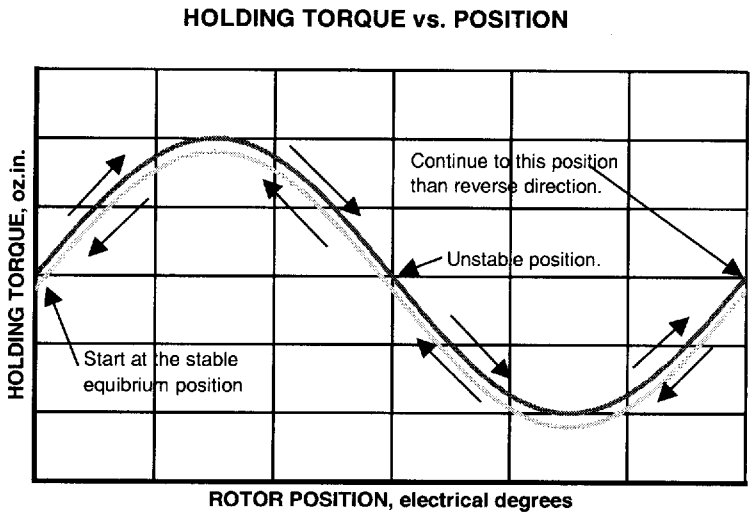

Figure 51 — Desired data points of holding torque measurement

4.3.4.3 Spin tests

4.3.4.3.1 General

In the spin tests, the motor is driven by another motor, and the voltages that appear at the winding terminals, or the currents flowing in a shorted winding are recorded. The test results are used to calculate losses and the large signal inductance. A typical spin test setup is shown in Figure 52.

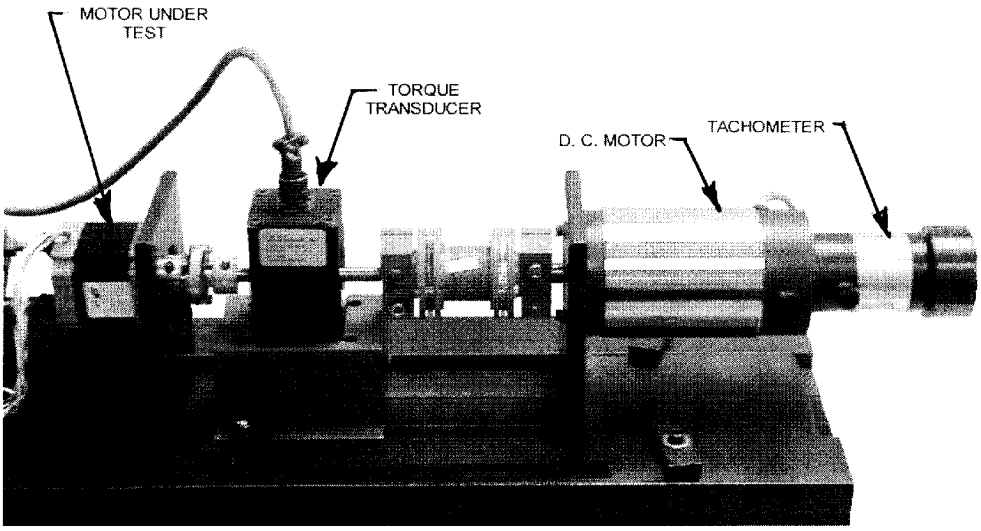

Figure 52 — Typical spin test setup

Copyright National Electrical Manufacturers Association
Provided by IHS under license with NEMA
No reproduction or networking permitted without license from IHS
Not for Resale

4.3.4.3.2 Spin torque

Measure the torque (amplitude, in oz-in, and sign) required to spin the motor, open circuited at 600 rpm and 1200 rpm, clockwise and counterclockwise. Do not adjust the zero setting of the torque transducer readout between measurements. If the motor has a high detent torque, additional inertia may be required to reduce velocity ripple.

4.3.4.3.3 Spin voltages and currents

The large signal inductance measurement differs from the bridge method used to measure the inductance shown on motor data sheets (see 4.3.3.6.1). The bridge method excites the motor winding with a low voltage at 1000 Hz. This gives an inductance value that can be verified by anyone with an impedance bridge. It is acceptable for incoming inspection purposes, but not for performance prediction.

When the motor windings are driven at or near rated current, the steel of the stator and rotor laminations is driven over a much broader magnetization range than by an impedance bridge. Hysteresis is less significant and the large signal inductance is substantially larger than the inductance reading when measured on an impedance bridge.

The motor could be excited with a higher voltage while measuring the resulting current. But since the large signal inductance is also affected by the rotor position as well as the direction of the current, it would require a number of tests, using controlled rotor position and winding currents. An alternate, more practical method, uses the motor itself as the excitation source. The motor rotor is driven at a moderate speed, while recording the generated EMF across the windings. The winding is then short circuited and the current caused by the EMF is measured. Since the large signal inductance is the major component in the total winding impedance, it is readily calculated from the voltage and current measurements.

Spin voltage and current measurements shall be performed as follows.

a) Spin the motor at 600 rpm. Measure the peak-to-peak voltage across one phase winding, and then across both phase windings in series. Record the spin speed in rpm and both voltage readings. **CAUTION:** Many high impedance motors can produce open circuit voltages in excess of 100 volts. Use care when measuring the terminal voltage. If necessary, use a 10X oscilloscope probe when making measurements.

b) At 600 rpm, short circuit one phase winding, and measure the peak-to-peak short circuit current. Then short both phase windings connected in series and measure the peak-to-peak short circuit current. Record the spin speed and both currents.

c) Repeat the above measurements at 1200 rpm.

The following equation is used to calculate the large signal inductance for one phase:

$$L = \left(\frac{E_g}{I_{SC}}\right)\left(\frac{9.549}{(PC)(S)}\right)$$

Copyright National Electrical Manufacturers Association
Provided by IHS under license with NEMA
No reproduction or networking permitted without license from IHS
Not for Resale

where

L is the inductance, in henries;

E_g is the back EMF, in volts rms;

I_{SC} is the short circuit current, in amperes rms;

PC is the pole count (teeth on the rotor);

S is the speed, in rpm.

4.3.4.4 Calculation of other step motor parameters

The following step motor parameters can be calculated using input from the tests described in 4.3.4.1, 4.3.4.2, and 4.3.4.3:

a) torque constant;
b) saturation term;
c) detent torque;
d) third harmonic;
e) hysteresis torque;
f) eddy current equivalent resistance;
g) large signal inductance.

The computer program SPASM[1], or its equivalent, may be used to perform these calculations. A sample form for logging the measurements obtained in 4.3.4.1, 4.3.4.2, and 4.3.4.3 is shown in Table 23.

Table 23 — Sample logging sheet for results from alternative stepping motor tests

COMPILATION OF TEST RESULTS		**Date:**		**Page**
	Data	**Units**		**Units**
Motor Part Number				
Brand Name				
Pole Count				
Rotor Inertia		g-cm^2		
Motor Length		inches		
Shape of Motor Cross-section				
Cross-section Dimension		inches		
Number of motor leads				
Rated Current		A		
Phase Winding Resistance(room temp.)		Ω		
Inductance (Bridge)		mH		
Rated Power dissipation		Watts		
Detent Torque	**Test Date:**			
Maximum CW Torque #1		oz-in		
Maximum CW Torque #2		oz-in		
Maximum CW Torque #3		oz-in		
Maximum CW Torque #4		oz-in		

[1] The computer program is available in the *Step Motor System Design Handbook*, 2nd edition, Albert C. Leenhouts

Copyright National Electrical Manufacturers Association
Provided by IHS under license with NEMA
No reproduction or networking permitted without license from IHS
Not for Resale

Table 23 (*continued*)

COMPILATION OF TEST RESULTS		**Date:**		**Page**
	Data	**Units**		**Units**
Motor Part Number				
Minimum CW Torque #1		oz-in		
Minimum CW Torque #2		oz-in		
Minimum CW Torque #3		oz-in		
Minimum CW Torque #4		oz-in		
Maximum CCW Torque #1		oz-in		
Maximum CCW Torque #2		oz-in		
Maximum CCW Torque #3		oz-in		
Maximum CCW Torque #4		oz.in		
Minimum CCW Torque #1		oz-in		
Minimum CCW Torque #2		oz-in		
Minimum CCW Torque #3		oz-in		
Minimum CCW Torque #4		oz-in		
Holding Torque, One Phase on				
At 1 Ö = 0.7 RWC		oz-in		A
At 1 Ö = 0.7 RWC		oz-in		A
At 1 Ö = 0.7 RWC		oz-in		A
At 1 Ö = 0.7 RWC		oz-in		A
At 1 Ö = 1.4 RWC		oz-in		A
At 1 Ö = 1.4 RWC		oz-in		A
At 1 Ö = 1.4 RWC		oz-in		A
At 1 Ö = 1.4 RWC		oz-in		A
Holding Torque, Two Phases on				
At 1 Ö = 0.7 RWC		oz-in		A
At 1 Ö = 0.7 RWC		oz-in		A
At 1 Ö = 0.7 RWC		oz-in		A
At 1 Ö = 0.7 RWC		oz-in		A
At 1 Ö = 1.4 RWC		oz-in		A
At 1 Ö = 1.4 RWC		oz-in		A
At 1 Ö = 1.4 RWC		oz-in		A
At 1 Ö = 1.4 RWC		oz-in		A
Spin Torque, Windings Open Circuited				
Torque to spin motor CW at 600 rpm		oz-in		
Torque to spin motor CCW at 600 rpm		oz-in		
Torque to spin motor CW at 1200 rpm		oz-in		
Torque to spin motor CCW at 1200 rpm		oz-in		
EMF, One Phase at 600 rpm		V		
EMF, Two Phase at 600 rpm		V		

Copyright National Electrical Manufacturers Association
Provided by IHS under license with NEMA
No reproduction or networking permitted without license from IHS
Not for Resale

Table 23 (*continued*)

COMPILATION OF TEST RESULTS		**Date:**		**Page**
	Data	**Units**		**Units**
Motor Part Number				
Spin Torque, Windings Open Circuited				
Short Ckt, Current, 1 Ö at 600 rpm		A		
Short Ckt, Current, 2 Ö at 600 rpm		A		
EMF, One Phase at 1200 rpm		V		
EMF, Two Phase at 1200 rpm		V		
Short Ckt, Current, 1 Ö at 1200 rpm		A		
Short Ckt, Current, 2 Ö at 1200 rpm		A		
Pullout Torque Test				
Drive Voltage	24.00	V		
Phase Current		A		
Measured Phase Current	**Phase A**		**Phase B**	
State 0: Phase Current		A		A
State 1: Phase Current		A		A
State 2: Phase Current		A		A
State 3: Phase Current		A		A
State 4: Phase Current		A		A
State 5: Phase Current		A		A
State 6: Phase Current		A		A
State 7: Phase Current		A		A
Measured Pullout Torque				
Pullout Torque @ 1.0 Rev./Second		oz-in		
Pullout Torque @ 2.0 Rev./Second		oz-in		
Pullout Torque @ 3.2 Rev./Second		oz-in		
Pullout Torque @ 5.0 Rev./Second		oz-in		
Pullout Torque @ 8.0 Rev./Second		oz-in		
Pullout Torque @ 10.0 Rev./Second		oz-in		
Pullout Torque @ 12.0 Rev./Second		oz-in		
Pullout Torque @ 15.0 Rev./Second		oz-in		
Pullout Torque @ 20.0 Rev./Second		oz-in		
Pullout Torque @ 25.0 Rev./Second		oz-in		
Pullout Torque @ 32.0 Rev./Second		oz-in		
Pullout Torque @ 40.0 Rev./Second		oz-in		
Pullout Torque @ 50.0 Rev./Second		oz-in		

--`,,`,,`-`-`,,`,,`,`,,`---

Copyright National Electrical Manufacturers Association
Provided by IHS under license with NEMA
No reproduction or networking permitted without license from IHS
Not for Resale

Table 23 (*continued*)

COMPILATION OF TEST RESULTS		**Date:**		**Page**
	Data	**Units**		**Units**
Phase A				
Phase B				
P/N				
date				
Detent Torque Phasing Test-1,000,000 count readout				
Connect motor to position sensor, zero readout and do not change				
ENERGIZE at rated current	Reading-Counts			
One Phase ON				
OFF				
Two Phases ON				
OFF				

4.4 Requirements for brush type servo motors only

4.4.1 Functional tests and performance

4.4.1.1 Terminal resistance

4.4.1.1.1 Procedure

The terminal resistance of brush commutated motors shall be measured as follows.

a) Lock the rotor shaft and apply a d.c. voltage sufficient to drive a current equal to 10 percent of rated current through the motor.

b) Measure voltage and current for at least five different equally spaced shaft angular positions. Take readings quickly to avoid heating effects.

c) Measure motor frame temperature, *è*, at the end of the test.

d) Average the values of resistance ($R = V / I$) to obtain R_T.

e) Calculate the resistance at 25ºC (77ºF) using the following formula:

$$R_{25} = \left(\frac{K+25}{K+q} \right) R_q$$

Copyright National Electrical Manufacturers Association
Provided by IHS under license with NEMA
No reproduction or networking permitted without license from IHS
Not for Resale

where

R_{25} is the motor terminal resistance at 25ºC, in ohms;

$R_{è}$ is the average resistance at temperature, *è*, in ohms;

K equals 234.5 for copper windings;

è is the motor frame temperature at time of test, in ºC.

The resistance of brush commutated motors cannot be accurately measured with a conventional ohmmeter because the low voltage and current output of such devices will not break down the normal film which is present on the commutator surface. Where it is not in conflict, ANSI/IEEE 113 should be used.

4.4.1.1.2 Acceptance criteria

The acceptance criteria shall be determined by the manufacturer.

4.4.1.2 Torque constant

4.4.1.2.1 Preparation for test

Mount the motor as in Figure 53. The coupling shall be of a flexible disk type.

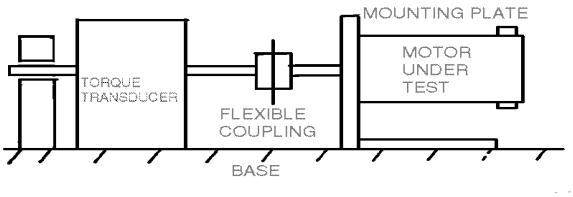

Figure 53 — Torque constant test layout

4.4.1.2.2 Test procedure for cold motor

The following procedure for a cold motor shall apply.

a) With the motor temperature stabilized at ambient temperature, measure and record the winding resistance (per test procedure in 4.4.1.1) and ambient temperature.

b) If the motor is a wound field design, energize the motor field with the rated field current. Maintain this rated current through the rest of the test.

c) Successively energize the armature circuit with approximately 0.25, 0.50, 0.75, 1.00, 1.25, and 1.50 times the rated armature current. Record armature current and locked rotor output torque at each test current value. IMPORTANT: take readings as rapidly as possible to prevent appreciable change in motor temperature.

4.4.1.2.3 Test procedure for hot motor

The following procedure for a hot motor shall apply.

Copyright National Electrical Manufacturers Association
Provided by IHS under license with NEMA
No reproduction or networking permitted without license from IHS
Not for Resale

a) Apply sufficient current to the motor to cause the windings to heat to approximately 100°C and maintain this condition until thermal stability has been reached (at least three thermal time constants).

b) Repeat the test procedure outlined 4.4.1.2.2(c).

c) Immediately after the above test is completed and before the motor temperature can change appreciably, measure and record the motor winding resistance and the ambient temperature.

4.4.1.2.4 Calculation of torque constant

For both hot and cold test data, plot output torque versus armature amperes as shown in Figure 54.

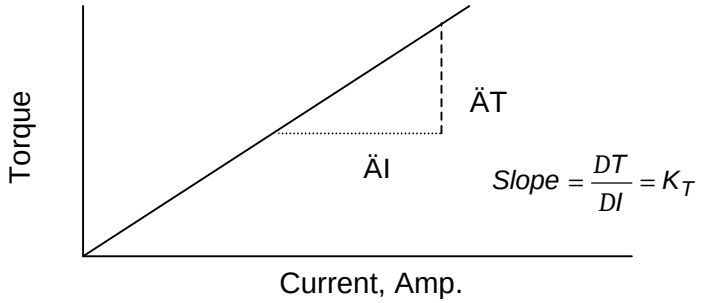

Figure 54 — Torque vs. armature amps

Due to magnetic saturation, the torque per ampere may decrease at higher test current values.

The torque constant shall be determined using the linear portion of the plotted line obtained from the lower test current values. The slope of the plotted line is the torque constant, K_T, at the test temperature. The various units include

$$\frac{lb-ft}{amps}, \frac{N-m}{amps}, \frac{lb\text{-}in}{amps}$$

The motor winding temperature for the hot test should be determined according to 4.2.2.

The temperature coefficient of the torque constant can be determined as follows:

$$C_1 = \left(\frac{K_{T,COLD} - K_{T,HOT}}{K_{T,COLD}}\right)\left(\frac{100}{q_{W,HOT} - q_{W,COLD}}\right)$$

where

C_1 is the torque constant temperature coefficient, in %/ºC;

$K_{T,COLD}$ is the torque constant, cold;

$K_{T,HOT}$ is the torque constant, hot;

$è_{W,COLD}$ is the winding temperature, cold;

$è_{W,HOT}$ is the winding temperature, hot.

Copyright National Electrical Manufacturers Association
Provided by IHS under license with NEMA
No reproduction or networking permitted without license from IHS
Not for Resale

The torque constant at any winding temperature can now be calculated by the formula:

$$K'_T = (K_{T,COLD})\left[1 - \frac{C_1}{100}(q'_W - q_{W,COLD})\right]$$

where

K_T is the torque constant at winding temperature, $è_W$;

$è_W$ is any winding temperature, in ºC.

4.4.1.2.5 Acceptance criteria

The acceptance criteria shall be determined by the manufacturer.

4.5 Requirements for brushless servo motors only

4.5.1 Functional tests and performance

4.5.1.1 Terminal resistance

The terminal resistance of brushless servo motors shall be measured as follows with motor temperature stabilized at ambient to ensure the frame and winding are at the same temperature.

4.5.1.1.1 Procedure

The following measurement techniques, specified in IEEE 115, shall apply.

a) Measure resistance between each pair of leads or terminals using a four-terminal Kelvin Bridge (for resistance values of 1 ohm or less), or a Wheatstone Bridge (for resistance values greater than 1 ohm), having an accuracy of ± 1% or better. Average the values to determine the nominal terminal resistance. Measurement techniques described in IEEE 118 shall apply. Measure motor frame temperature at the end of the test.

b) Calculate the resistance at 25°C (77ºF) using the following formula:

$$R_{25} = \left(\frac{K+25}{K+T}\right)R_q$$

where

R_{25} is the motor terminal resistance at 25°C, in ohms;

$R_è$ is the resistance at temperature, $è$, in ohms;

K equals 234.5 for copper;

$è$ is the motor temperature, in °C.

Copyright National Electrical Manufacturers Association
Provided by IHS under license with NEMA
No reproduction or networking permitted without license from IHS
Not for Resale

4.5.1.1.2 Acceptance criteria

The acceptance criteria shall be determined by the manufacturer.

4.5.1.2 Winding inductance

4.5.1.2.1 Inductance bridge method

This method, which uses a bridge with a test frequency of 1000 Hz or less and with current injected into the windings, shall be used when inductance at a specified current level is required. The following test method shall apply.

a) Lock the rotor in place and with a suitable d.c. supply, and pass rated current through the winding under test.

b) Measure the inductance of the winding used in (a) with a suitable bridge with 1 kHz at 1 V rms applied to the winding under test. See Figure 40.

c) Reduce the current in (a) to zero and unlock the rotor. Reposition the rotor by 45º. Repeat (a) and (b).

d) Repeat (d) until one revolution is complete (8 measurements).

e) The average of the readings taken is the value of rated winding inductance.

NOTE When the inductance value with the winding energized is required, the d.c. source should remain connected and the winding current adjusted to the desired level. When the inductance bridge is connected to the same winding a suitable blocking capacitor should be used to protect the inductance bridge from the d.c. current source.

4.5.1.2.2 Current change method

This method shall be used for design related purposes. The following test procedure shall apply.

a) Lock the rotor in place.

b) Connect the winding to be measured to a suitable d.c. power source as shown in Figure 41 and adjust the output of the power source to provide 110 percent rated current to the winding.

c) Actuate Switch 1 and with the oscilloscope read the current decay on the oscilloscope across R_2 and record the time, t, when the current reaches the value I.

d) Calculate the incremental inductance of the winding for any part of the curve according to the following formula:

$$L = \frac{(-R)(t)}{ln\left(\frac{I_t}{I_0}\right)}$$

Copyright National Electrical Manufacturers Association
Provided by IHS under license with NEMA
No reproduction or networking permitted without license from IHS
Not for Resale

where

L is incremental inductance, in henries;

R is circuit resistance $R_w + R_2$, in ohms;

I_0 is initial (time = zero) current, in amps;

t is time, when current = I, in seconds;

ln is the natural logarithm;

I_t is the current at time t, in amps.

At time when $I_t = 0.37 \times I_0$ (63% of total change), $L = R \times t$

e) Unlock the rotor and re-position by 45º.

f) Repeat steps (a) to (e) until one completed revolution is made (8 measurements).

g) The average of the ratings is the inductance used for design.

Switch 1 is a make-before-break switch. Therefore, SW1A is normally open and SW1B is normally closed.

NOTE The value of R LIMIT in Figure 41 will provide the current limit when switch SW1A is actuated prior to switch SW1B opening. Current is monitored across the resistor, R_2.

4.5.1.2.3 Acceptance criteria

The acceptance criteria shall be determined by the manufacturer.

4.5.1.3 Electrical time constant

The following procedures for determining electrical time constant for brushless servo motors shall apply.

a) Lock the rotor in place.

b) Connect the winding to be measured to a suitable d.c. power source and adjust the output of the power source to provide 10% of rated current to the winding.

c) Actuate Switch 1 and use an oscilloscope with a high speed current probe to read the decay of the current through the motor winding.

d) The electrical time constant is defined as the time it takes the current to decay to 37% of the original value. Where

I is the steady state current before switch closure,
t_0 is the time when the switch is closed,
I_0 is the current at the instant the switch is closed,
I_t is the measured current at any time, t,

Copyright National Electrical Manufacturers Association
Provided by IHS under license with NEMA
No reproduction or networking permitted without license from IHS
Not for Resale

find the time at t_0 and $I_0 = I$ at which $I_t = 0.37 \times I$. This time will be the electrical time constant (t_E).

e) Unlock the rotor and reposition by 90º electrical.

f) Repeat (a) through (e) until one completed revolution is made.

g) The average of the readings is the motor electrical time constant.

NOTE A storage or digital scope of chart recorder will simplify this measurement procedure.

Switch 1A is a make before break switch. Therefore, SW1A is normally open, and SW1B is normally closed.

NOTE The value of R LIMIT in Figure 41 will provide the current limit when switch SW1A is actuated prior to switch SW1B opening.

Copyright National Electrical Manufacturers Association
Provided by IHS under license with NEMA
No reproduction or networking permitted without license from IHS
Not for Resale

5 Controls

5.1 Ratings

5.1.1 Ambient temperature

Care should be taken not to exceed the ambient temperature range specified by the manufacturer.

5.1.2 Basis of rating

The ratings of motion/position control apparatus are based on an operating ambient temperature (immediately surrounding the control) of either 40°C (104°F) for enclosed units that are intended to stand alone, or 55°C (131°F) for units intended for mounting within another enclosure.

At the option of the manufacturer, a lower ambient temperature can be used as the basis of rating. If a lower ambient temperature is used, the manufacturer shall provide an output derating factor, stated in % output/°C, to allow adjustment of the control output power to an equivalent rating based on the ambient temperatures specified above.

For unusual conditions where other operating ambient temperatures are required, the manufacturer should be consulted.

5.1.3 Input voltage and frequency ratings

Preferred input power voltage and frequency ratings for motion/position controls shall be as follows:

a) Alternating current, 60 Hertz — 115, 200, 230, 460, and 575 volts;

b) Alternating current, 50 Hertz — 100, 200, 220, 380, 415, and 500 volts.

Other a.c. and d.c. input voltages shall be permitted to be used by agreement between the manufacturer and user.

A.c. voltages are based on ANSI C84.1 where applicable and reflect the fact that motion/position control is normally applied at the point of power utilization. Individual manufacturers may choose to make their controls at the utilization voltage (listed above) or at the corresponding nominal system voltage (e.g. 120, 208, 240, 480, or 600 volts, 60 Hz).

5.1.4 Range of operating voltage and frequency

The motion/position control shall operate at rated output with a variation of the applied voltage or frequency up to the following:

a) The rms input voltage shall not deviate more than ±10 % from the rated nameplate value;

b) The input frequency shall not deviate more than ± 2% from the rated nameplate value.

Copyright National Electrical Manufacturers Association
Provided by IHS under license with NEMA
No reproduction or networking permitted without license from IHS
Not for Resale

5.1.5 Input current ratings

Maximum continuous input current ratings shall be determined by the manufacturer of the controller.

5.2 Enclosures

For motion/position control systems that are designed to be used without installation in another enclosure, the system enclosure shall comply with classifications defined in ANSI/NEMA 250. Systems designed for installation within another enclosure shall be defined in accordance with the degrees of protection (IP codes) given in Tables 12 and 14 and shall comply with the requirements of clause 7.

5.3 Spacings

The requirements specified in NEMA ICS 1 shall apply.

5.4 Nameplate markings

Motion/position controls that are intended for mounting within another enclosure shall be permanently marked with the following minimum information:

a) manufacturer's name;

b) equipment identification.

In addition to the manufacturer's name and equipment identification, motion/position controls that are intended for use without installation inside of another enclosure or to be directly connected to the main incoming power source shall be permanently marked with the following input rating minimum information:

a) input rating:

   1) voltage;
   2) maximum continuous current;
   3) frequency (if a.c.);
   4) number of phases (if a.c.);
   5) maximum allowable system short circuit current;

b) output full load current or power.

5.5 Application information

5.5.1 Stepping motor-drive configurations

5.5.1.1 General

Stepping motor performance varies with drive type and conditions as shown in Figure 55.

Copyright National Electrical Manufacturers Association
Provided by IHS under license with NEMA
No reproduction or networking permitted without license from IHS
Not for Resale

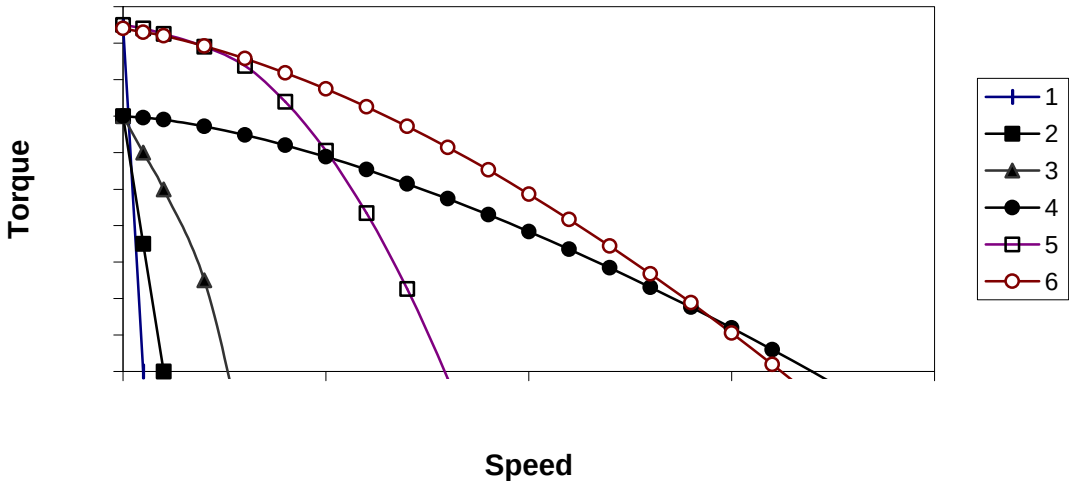

Figure 55 Relative performance of one motor under different drive methods

Characteristics of step motor drives are as follows.

a) Unipolar type drives energize only half of the motor winding at a time. Therefore, they offer less low speed torque than bipolar drives but have good speed performance. Current flows through the winding in only one direction.

b) Bipolar drives energize all of the winding at a time. Therefore, they offer higher low speed torque than unipolar systems. Higher current, low inductance windings are required to offer speed performance comparable to unipolar drives. Current flows in two directions.

c) For a single, eight leaded motor, the following equations characterize the relationship between unipolar, bipolar series and bipolar parallel.

   Bipolar Series Resistance = 2 x Unipolar Resistance
   Bipolar Series Inductance = 4 x Unipolar Inductance
   Bipolar Series Current = Unipolar Current / 1.4
   Bipolar Parallel Resistance = Unipolar Resistance / 2
   Bipolar Parallel Inductance = Unipolar Inductance
   Bipolar Parallel Current = 1.4 x Unipolar Current

5.5.1.2 Bipolar voltage drive

This rather uncommon drive consists of two H-Bridges switching the two phases to ground from the rated Bipolar motor voltage. The phases are energized in a predetermined sequence and the current flows in two directions through the motor windings.

5.5.1.3 Unipolar voltage drive

Although this drive offers relatively low speed performance, it is relatively inexpensive and therefore popular, especially in higher volume applications. Four transistors, or other power switching devices, switch the motor leads sequentially ground with unipolar rated voltage applied to the center taps of the windings.

Copyright National Electrical Manufacturers Association
Provided by IHS under license with NEMA
No reproduction or networking permitted without license from IHS
Not for Resale

5.5.1.4 Unipolar L/R type voltage drive

The addition of two power resistors, connected in series with the center taps of the windings, changes the L/R time constant and shortens current rise time, giving the motor slightly better speed performance. Proportionally higher drive voltages are required to provide rated current to the motor.

5.5.1.5 Unipolar constant current or PWM type drive

These popular drives switch voltages, much higher than the motor is rated for, to shorten current rise time and thereby enable the motor to run much faster than with conventional voltage drives. “Chopping” or “PWMing,” which involves turning the voltage on and off at very high frequencies, keeps rated current in the motor windings but prevents overdriving or overheating the motor.

5.5.1.6 Bipolar “series” constant current or PWM type drive

As with unipolar constant current drives, voltages much higher than the motor is rated for are used to improve speed performance. Since the inductance of the winding is four times higher than unipolar inductance, the motor cannot go as fast when connected in “series.” The motor is energized with 0.7 times the unipolar current to maintain rated power to the motor since the resistance is now 2 times the unipolar resistance.

5.5.1.7 Bipolar “parallel” constant current or PWM type drive

With the motor leads configured in parallel, the bipolar inductance now is equal to unipolar inductance. Therefore, both higher speeds can be achieved as well as higher low speed torques. This improved performance comes at the expense of higher drive currents.

5.5.1.8 Rules of thumb for “scaling” torque/speed curves when using constant current or PWM type drives

It is difficult to compare torque-versus-speed performance curves between vendors unless the same drives, voltages and conditions are applied to both motors. The following general rules are helpful for comparing performance or changing drive conditions to optimize motor performance in an application.

a) Doubling voltage approximately doubles maximum motor speed.

b) Changing to a motor with a current rating two times higher cuts the inductance by a factor of four, and, if the drive voltage is kept constant, the maximum motor speed approximately doubles. (This is why more speed is obtained from “bipolar parallel” than “bipolar series” configurations, but twice as much current is needed.)

c) Combinations of rules (a) and (b) can be used to optimize motor performance in an application.

Copyright National Electrical Manufacturers Association
Provided by IHS under license with NEMA
No reproduction or networking permitted without license from IHS
Not for Resale

5.5.2 Electronically commutated (brushless) motor-drive configurations

To analyze the performance of brushless motors and stepping motors, the configuration of the electronic drive must be considered. In the case of brushless motors, it has been demonstrated that three levels of torque constant can be obtained for a given motor design. Assuming that the induced back EMF is a pure sinusoid, complementary drive currents can be developed by the electronic drive circuitry. In a typical three-phase motor structure, this will result in a torque constant of 1.5 of the torque of one phase. However, if the same motor is driven with an electronic drive utilizing six-step circuitry (see Figure 56), the torque constant is improved to 1.616 of the torque developed by one phase (see Table 24 and, for a graphical representation, Figure 58). The torque constant is improved even further to 1.703 of the torque developed by one phase if the electronic circuitry is configured to deliver 12 step currents (see Figures 56 and 57) to the motor windings (see Table 25 and, for a graphical representation, Figure 59).

It must be noted that there is a variation in the torque ripple for the various configurations. With a well designed motor and corresponding electronic drive, the torque ripple with a sinusoidal drive can approach zero; the 12-step is 3.4%; the 6-step is 13.9%. Another consideration that must be recognized is the form of the drive currents supplied to the windings. For thermal reasons, linear amplifiers are not generally used in motion control drive circuits. Most amplifiers are of the pulse-width modulated (PWM) design. These circuits are variations of either Type A (0% modulation at zero signal input and 100% modulation at full signal input) or Type B (50% modulation at zero signal input, 100% positive output for full scale positive signal input, and 100% negative output for full scale negative signal input). These circuits are sometimes referred to as 2-quadrant or 4-quadrant circuits, or as sign-magnitude and zero deadband circuits.

In both circuits, the relationship between the PWM frequency of operation and the motor inductance is of paramount importance. If the inductance of the motor is too high and the PWM frequency of the amplifier is too high, the current cannot build up quickly enough to allow the motor to respond. The servo loop response is then adversely affected. If the motor inductance is too low and the PWM frequency of the amplifier is too low, the zero signal currents can cause severe overheating to the motor and amplifier.

Table 24 — Torque versus angular position for a six-step drive

	Angle (degrees)					
Phase	0	30	60	90	120	150
R *I (pu)*	0	+1	+1	+1	+1	0
T_R *(pu)*	0	0.500	0.866	1.000	0.866	0
S *I (pu)*	+1	0	0	-1	-1	-1
T_S *(pu)*	0.866	0	0	0.500	0.866	1.000
T *I* (pu)	-1	-1	-1	0	0	+1
T_T *(pu)*	0.866	1.000	0.866	0	0	0.500
Total *T* (pu)	1.732	1.500	1.732	1.500	1.732	1.500

NOTE Table values are per unit current I and developed torque T as a function of rotor angular position. See Figure 57 for a graphical representation.

Copyright National Electrical Manufacturers Association
Provided by IHS under license with NEMA
No reproduction or networking permitted without license from IHS
Not for Resale

Table 25 — Torque versus angular position for a 12-step drive

	Angle (degrees)											
Phase	0	15	30	45	60	75	90	105	120	135	150	165
R *I (pu)*	0	0.732	0.732	+1	+1	+1	+1	+1	+1	0.732	0.732	0
T_R *(pu)*	0	0.189	0.366	0.707	0.866	0.966	1.000	0.966	0.866	0.518	0.366	0
S *I (pu)*	+1	0.732	0.732	0	0	-0.732	-0.732	-1	-1	-1	-1	-1
T_S *(pu)*	0.866	0.518	0.366	0	0	0.189	0.366	0.707	0.866	0.966	1.000	0.966
T *I* (pu)	-1	-1	-1	-1	-1	-0.732	-0.732	0	0	0.732	0.732	+1
T_T *(pu)*	0.866	0.966	1.000	0.966	0.866	0.518	0.366	0	0	0.189	0.366	0.707
Total *T* (pu)	1.732	1.673	1.732	1.673	1.732	1.673	1.732	1.673	1.732	1.673	1.732	1.673
NOTE Table values are per unit current *I* and developed torque *T* as a function of rotor angular position. See Figure 58 for a graphical representation.												

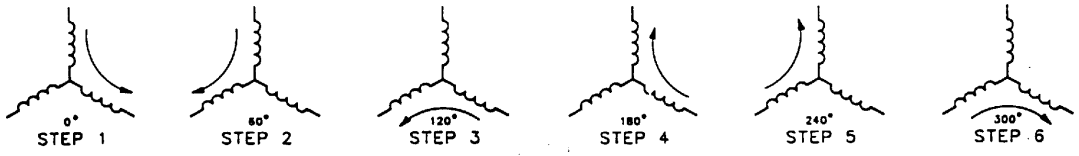

Figure 56 — Current paths for six-step circuitry

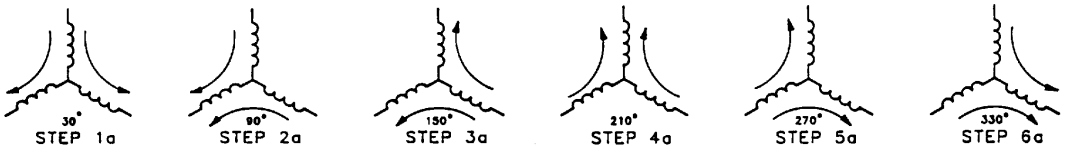

Figure 57 — Additional current paths for 12-step circuitry

Copyright National Electrical Manufacturers Association
Provided by IHS under license with NEMA
No reproduction or networking permitted without license from IHS
Not for Resale

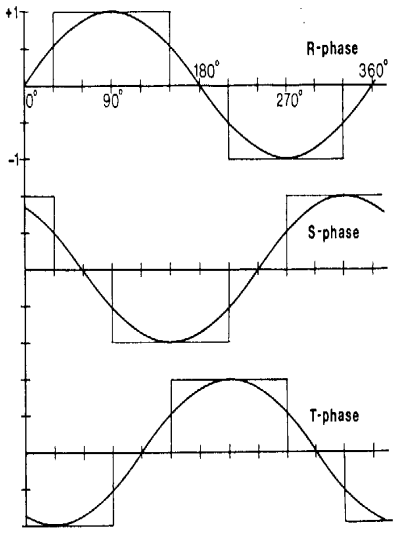

Figure 58 — Graph of current versus angle for six-step circuitry

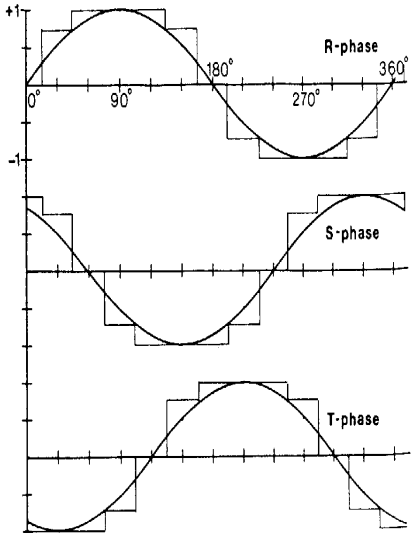

Figure 59 — Graph of current versus angle for 12-step circuitry

Copyright National Electrical Manufacturers Association
Provided by IHS under license with NEMA
No reproduction or networking permitted without license from IHS
Not for Resale

6 Position and velocity feedback devices

6.1 Rotary encoders

6.1.1 Common requirements

The requirements in this subclause apply to rotary optical encoders of both the bearingless type (also known as modular or kit encoders) and the bearing type (shaft, C-face, or hollow shaft), providing square wave output.

6.1.1.1 Temperature ranges

The manufacturer shall specify the range (i.e. minimum and maximum values) for operating and storage temperatures for encoders.

WARNING: Damage to the encoder may occur when attaching the encoder to a heat generating device, such as a motor. The maximum temperature of the heat generating surface or the free air ambient, whichever is greater, should be selected as ambient.

6.1.1.2 Operating supply voltages

Normal operating supply voltages shall be as follows:

a) 5 V d.c.;
b) 12 V d.c.;
c) 24 V d.c.;
d) 5 to 24 V d.c.;
e) 5 to 28 V d.c.

The supply voltage tolerance shall be specified by the manufacturer as a minimum/maximum value for single supply voltages.

WARNING: Damage to the encoder may occur if the specified operating supply voltage tolerances are exceeded. Some units with higher voltages may have temperature limitations. For momentary and long term tolerance considerations or temperature limitations, the manufacturer of the encoder should be consulted.

6.1.1.3 Output Interfaces

The manufacturer may provide different output interface configurations. The standard output configurations are as follows:

a) line driver;
b) TTL compatible;
c) open collector;
d) amplified sine wave;
e) triangular wave.

The manufacturer may specify the type of integrated circuit or equivalent that will produce the required output interface for the rotary optical encoder.

Copyright National Electrical Manufacturers Association
Provided by IHS under license with NEMA
No reproduction or networking permitted without license from IHS Not for Resale

6.1.1.4 High/low output voltage (digital outputs only)

The manufacturer shall provide the high and low level output voltage information according to the following format. See Figure 60.

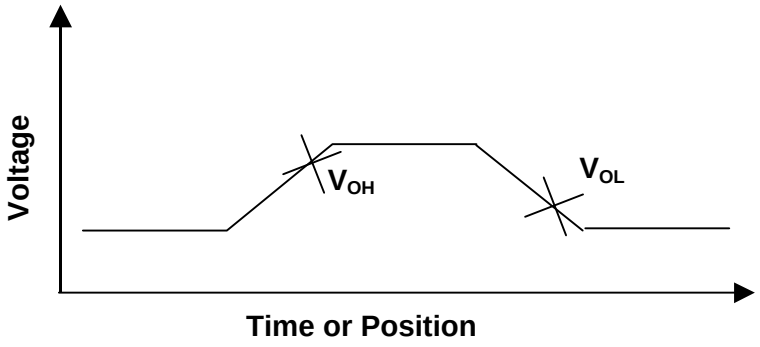

Figure 60 — High/low output voltage

High Level Output Voltage (V_{OH}) is the electrical characteristic point of logic level one, in volts. Low Level Output Voltage (V_{OL}) is the electrical characteristic point of logic level zero, in volts.

The values for V_{OH} and V_{OL} shall be measured using a load specified by the manufacturer.

6.1.1.5 Shaft diameters

Table 26 provides dimensions for motor shaft diameters for the bearingless and bearing hollow shaft encoders. The manufacturer may supply shaft sizes not appearing on Table 26. Shaft diameters greater than ½ inch are typically not used with bearingless encoders.

Copyright National Electrical Manufacturers Association
Provided by IHS under license with NEMA
No reproduction or networking permitted without license from IHS
Not for Resale

Table 26 — Shaft diameters

Inch dimensioned shafts			Metric dimensioned shafts	
Nominal diameter (inches)	Min./max. diameter (inches)		Nominal diameter (mm)	Min./max.diameter (mm)
1/8	.1245/.1250		2	1.99/2.00
5/32	.1557/.1562		3	2.99/3.00
3/16	.1870/.1875		4	3.99/4.00
1/4	.2495/.2500		5	4.99/5.00
5/16	.3120/.3125		6	5.99/6.00
3/8	.3745/.3750		7	6.99/7.00
7/16	.4370/.4375		8	7.99/8.00
1/2	.4995/.5000		9	8.99/9.00
9/16	.5620/.5625		10	9.99/10.00
5/8	.6245/.6250		12	11.99/12.00
3/4	.7495/.7500		14	13.99/14.00
7/8	.8745/.8750		20	19.99/20.00
1.0	.9995/1.0000			

6.1.1.6 Maximum acceleration

The manufacturer shall provide the maximum acceleration of the encoder in units according to Annex A.

6.1.1.7 Allowable radial misalignment tolerance

The manufacturer shall specify the maximum allowable radial misalignment tolerance.

6.1.1.8 Index pulse characteristics

Encoder manufacturers identify the index pulse using different terms such as:

a) index;
b) marker;
c) home position;
d) zero reference.

The most common index pulse configurations are ungated and gated. The ungated index pulse occurs once per revolution. The index edges are not necessarily coincident with A and B signals. See Figure 61 for examples of possible index pulse configurations.

Copyright National Electrical Manufacturers Association
Provided by IHS under license with NEMA
No reproduction or networking permitted without license from IHS
Not for Resale

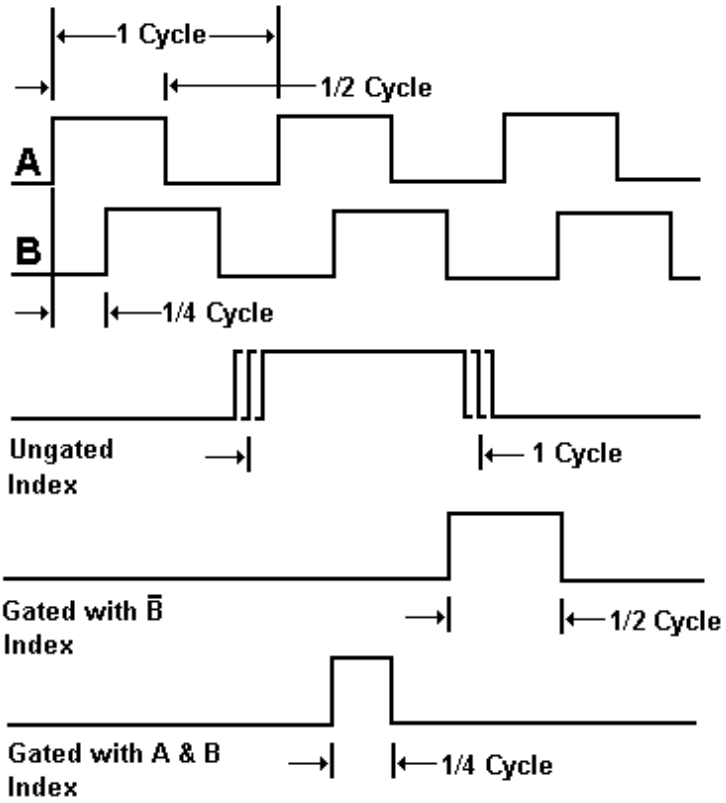

NOTE Direction of shaft rotation is clockwise as viewed from the motor mounting surface.

Figure 61 — Index pulse examples

The manufacturer shall specify timing relationship between the index pulse and the A & B quadrature channels.

6.1.1.9 Commutation signals

Encoders can have additional, typically three, output signals that can be used to commutate a three-phase motor. The encoder manufacturer shall show the relationship and tolerances between the commutation signals and the other signals on the encoder. Figure 62 shows the waveforms for the commutation signals.

Copyright National Electrical Manufacturers Association
Provided by IHS under license with NEMA
No reproduction or networking permitted without license from IHS
Not for Resale

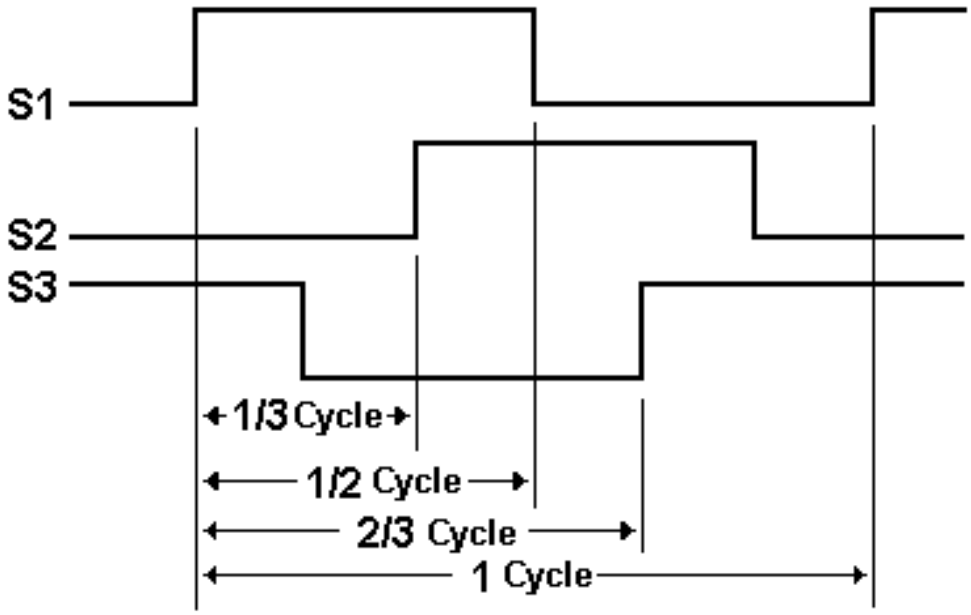

Figure 62 — 120° electrical commutation signals, clockwise direction

6.1.1.10 Output Protection

Encoders shall be operated within the manufacturer's recommended operating conditions for supply, output voltage, and electrical loading. Improper interconnection can result in component damage.

Electrostatic discharge precautions shall be observed at all times, to include final inspection, packaging, shipping, receiving, storage, and final installation.

When proper electrical connections have been made, output protection from reverse biasing can be done by mechanical method by use of a polarized connector and polarized receptacle or electrical by using appropriate circuitry.

6.1.1.11 Connections

Encoders are commonly terminated with the following methods:

a) PC Board connector;
b) ribbon cable with connector;
c) discrete insulated wires otherwise known as pigtail wiring;
d) shielded cable with or without connector.

The manufacturer shall specify the type of connections supplied on the encoder and provide a pin out, color code, and function, if applicable.

6.1.1.12 Enclosures

The manufacturer shall supply an IP rating for the encoder.

Copyright National Electrical Manufacturers Association
Provided by IHS under license with NEMA
No reproduction or networking permitted without license from IHS
Not for Resale

6.1.1.13 Markings

6.1.1.13.1 Minimum information appearing on encoder

Encoders shall bear the following minimum amount of information:

a) manufacturer's model description or part number;

b) manufacturer's date code or serial number.

6.1.1.13.2 Encoder data sheet

The manufacturer shall provide the following minimum information. Nominal values and tolerances or maximum values shall be specified where applicable for all information provided.

a) Electrical:
   1) resolution (line count);
   2) supply voltage;
   3) current requirements;
   4) output voltage levels;
   5) output interfaces;
   6) maximum operating frequency;
   7) output signal waveform relative to direction of rotation;
   8) edge to edge separation (quadrature error);
   9) electrical connections (pin-outs).

b) Mechanical:
   1) size (drawing with dimensions and tolerances);
   2) connections;
   3) moment of inertia;
   4) maximum allowable gap tolerance, if bearingless encoder;
   5) maximum acceleration;
   6) weight;
   7) hub and shaft dimensions with tolerances;
   8) maximum mating shaft runout;
   9) maximum slew rate if bearing encoder;
   10) cable diameter;
   11) minimum bend radius.

c) Environmental:
   1) operating temperature;
   2) storage temperature;
   3) humidity;
   4) IP rating;
   5) shock;
   6) vibration.

Copyright National Electrical Manufacturers Association
Provided by IHS under license with NEMA
No reproduction or networking permitted without license from IHS
Not for Resale

6.1.1.14 Application information

The following are some of the important factors, which should be considered by the user in the application of encoders.

a) The method of mounting the bearingless encoder to the machine whose motion is being detected is a vital consideration because of possible errors or damage that can occur. Care should be taken that the radial and axial end play of the motor shaft and mounting surface runout with respect to the motor shaft, is within limits as specified by the encoder manufacturer.

b) The moment of inertia of the rotating components of the encoder may affect the dynamics of the motor system to which the encoder is installed.

c) Exceeding the maximum mechanical speed may cause permanent damage to the encoder. Exceeding the maximum electrical speed may result in incorrect data.

d) Noise in the input power supply or output of an encoder may cause application problems. Some of the common means of minimizing such noise are grounding, twisted pairs, shielding, and isolation of leads.

e) Line drivers should be used when connecting to long leads, low-impedance loads, or capacitive loads. Long leads on the output have an associated capacitance which can degrade high-frequency signals.

f) Encoders shall be operated within the manufacturer's recommended operating conditions for power supply and output voltage. Electrostatic discharge precautions should be observed at all times. Damage to the encoder may occur if the operating supply voltage tolerances are exceeded. For momentary and long term tolerance conditions the manufacturer should be consulted.

g) Care should be taken to provide adequate current at the proper voltage to the encoder.

h) Care should be exercised when attaching the encoder to a heat generating device, such as a motor, to prevent damage to the encoder. The maximum temperature of the heat generating surface or the free air ambient, whichever is greater, should be considered when selecting encoder operating temperature range.

i) Other factors to be considered are:

    1) type, location, and accessibility of connections,
    2) mounting dimensions and type of mounting.

6.1.1.15 Tests and performance

The following are the general requirements for testing an encoder for use with a motor. All test parameter results shall be within the encoder manufacturer’s specifications. All tests shall be performed using a single constant speed.

Copyright National Electrical Manufacturers Association
Provided by IHS under license with NEMA
No reproduction or networking permitted without license from IHS
Not for Resale

6.1.1.15.1 Test equipment

Equipment used to test encoders typically includes the following:

a) oscilloscope with a minimum of 2 channel inputs;
b) meter measuring volts and amps;
c) motor power supply or controller;
d) adjustable encoder power supply;
e) breakout box designed to allow easy connections to motor and encoder;
f) environmental chamber (for temperature testing if required);
g) logic analyzer (for absolute encoders only).

The test equipment shall be capable of performing the following tests:

a) signal output symmetry;
b) cycle variation for 360° mechanical rotation (flutter);
c) edge-to-edge separation signal or quadrature error;
d) index pulse width and relationship to signals A, B;
e) line count verification;
f) encoder signal binary logic output voltage levels;
g) current consumption;
h) supply voltage;
i) maximum rpm;
j) symmetry of the commutation channels (if present);
k) relationship of the commutation channels (if present);
l) minimum/maximum operating temperature;
m) sequential count verification (for absolute encoders only).

6.1.1.15.2 Performance

Tests specified are for encoders with square wave outputs. Direction of rotation is clockwise for a motor with an encoder installed. Consult encoder manufacturer for test requirements for sine wave encoders.

6.1.1.15.3 Signal output symmetry test parameters and waveforms

Symmetry of the data channels shall be checked by adjusting the oscilloscope for one cycle of the encoder output signal shown across the oscilloscope screen. Oscilloscope trigger is set for positive transition for input selected. An example of ideal symmetry (180° electrical) is shown in Figure 63. The encoder manufacturer shall specify the symmetry tolerance of the 1/2 cycle, in degrees.

--`,,`,,`-`-`,,`,,`,`,,`---

Copyright National Electrical Manufacturers Association
Provided by IHS under license with NEMA
No reproduction or networking permitted without license from IHS
Not for Resale

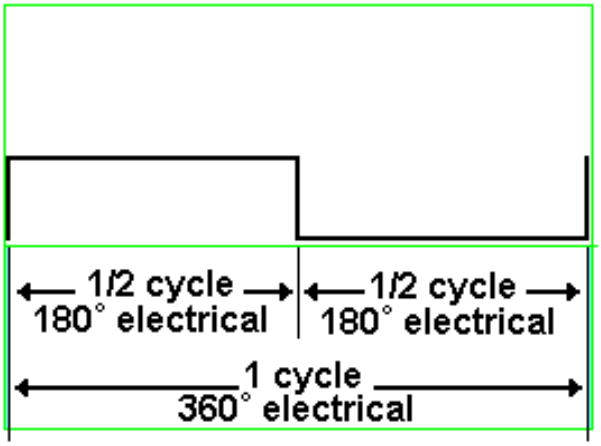

Figure 63 — Symmetry of an encoder output signal

6.1.1.15.4 Signal flutter for 360° mechanical rotation

Cycle variation (flutter) shall be checked by observing all subsequent rising edges, as shown in Figure 64, over 360° mechanical rotation. Flutter is the total minimum/maximum variation from 360° electrical. Flutter shall be specified as a range in degrees or a percentage of a full electrical cycle.

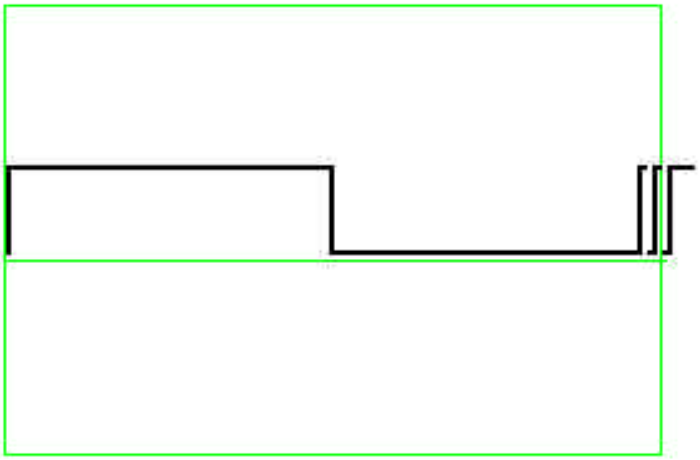

Figure 64 — Cycle variation (flutter)

6.1.1.15.5 Edge-to-edge separation

The edge-to-edge separation shall be checked by adding the second channel to the oscilloscope screen in Figure 64. See Figure 65.

Copyright National Electrical Manufacturers Association
Provided by IHS under license with NEMA
No reproduction or networking permitted without license from IHS
Not for Resale

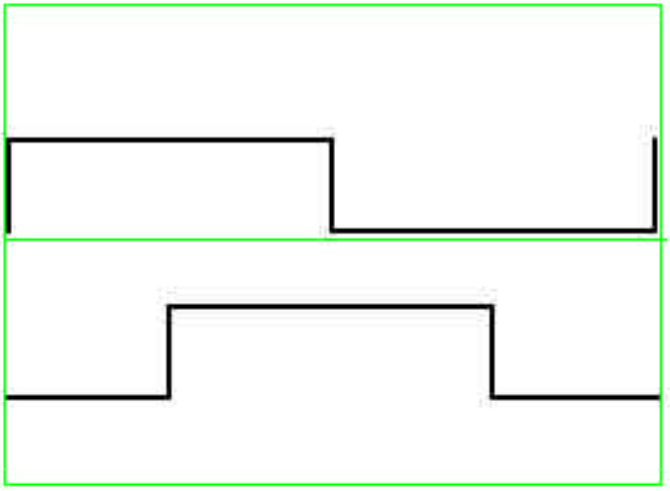

Figure 65 —Two channels on oscilloscope

The edge-to-edge separation shall be measured from the rising edge of the upper channel to the rising edge of the lower channel. The sweep rate of oscilloscope shall be set to display 1/2 cycle. Do not readjust the sweep. The oscilloscope trigger shall be set for the upper signal input and to sense positive transitions. The number of graduations shall be measured to determine the number of electrical degrees between the two edges. See Figure 66.

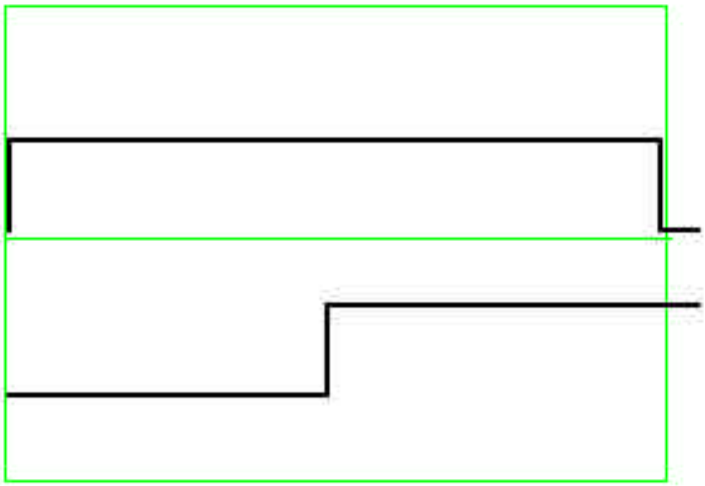

Figure 66 — Edge-to-edge separation measuring from rising edge of channel A to rising edge of channel B

To measure the edge-to-edge separation from the rising edge of lower channel to the falling edge of the upper channel, change the input trigger of the oscilloscope to the lower channel. Measure the number of graduations to determine the number of degrees between the two edges. The measurement shall meet the manufacturer's specifications. See Figure 67.

Copyright National Electrical Manufacturers Association
Provided by IHS under license with NEMA
No reproduction or networking permitted without license from IHS
Not for Resale

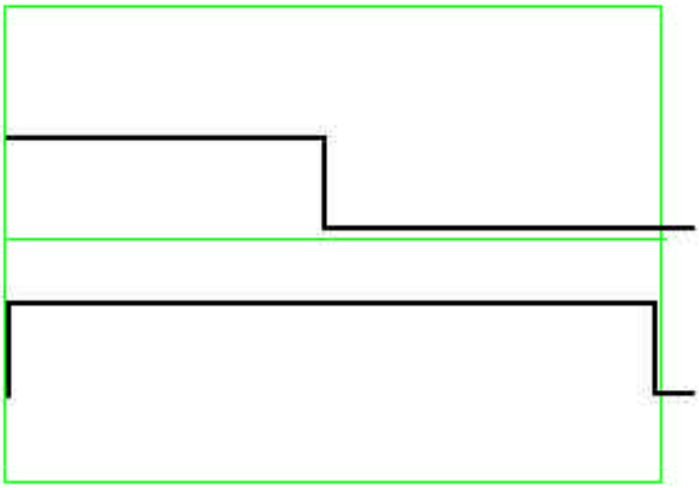

Figure 67 — Edge-to-edge separation measuring from rising edge of channel B to falling edge of channel A

To measure the edge-to-edge separation from the falling edge of upper channel to the falling edge of the lower channel, change the input trigger of the oscilloscope to the upper channel and to sense negative transitions. Measure the number of graduations to determine the number of degrees between the two edges. The measurement shall meet the manufacturer's specifications. See Figure 68.

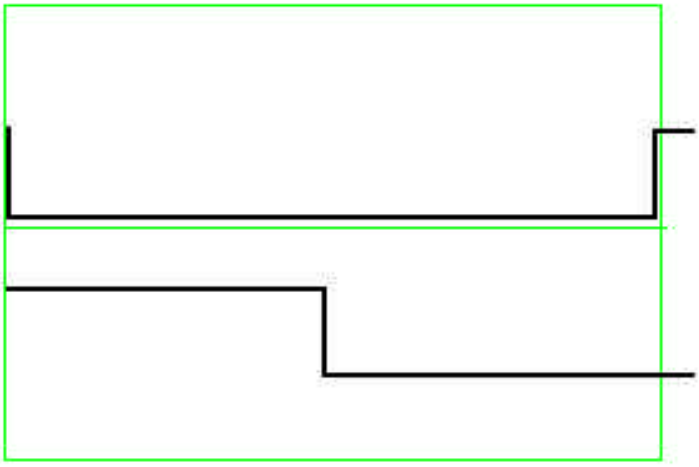

Figure 68 — Edge-to-edge separation measuring from falling edge of channel A to falling edge of channel B

To measure the edge-to-edge separation from the falling edge of lower channel to the rising edge of the upper channel, change the input trigger of the oscilloscope to the lower channel and to sense negative transitions. Measure the number of graduations to determine the

Copyright National Electrical Manufacturers Association
Provided by IHS under license with NEMA
No reproduction or networking permitted without license from IHS
Not for Resale

number of degrees between the two edges. The measurement shall meet the manufacturer's specifications. See Figure 69.

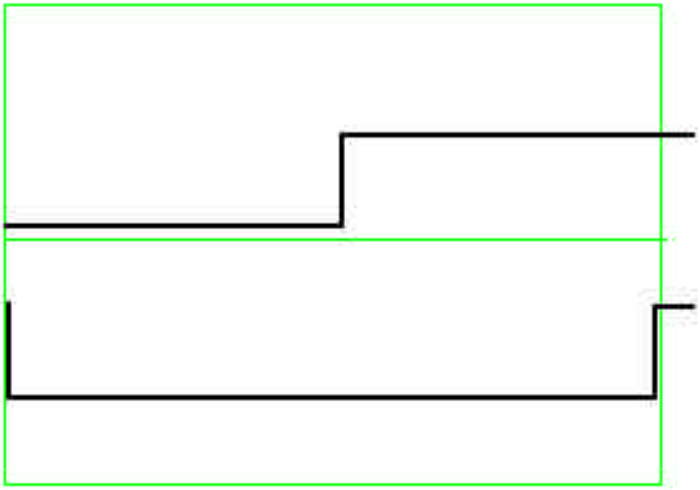

Figure 69 — Edge-to-edge separation measuring from falling edge of channel B to rising edge of channel A

6.1.1.15.6 Quadrature error

Quadrature error is the variance of the output signal edges due to errors caused by mechanical or electrical considerations (see Figures 70 to 74). Mechanical errors can be caused by shaft to hub tolerance, concentricity of the disk data tracks to hub/shaft centerline and perpendicularity of shaft to encoder mounting surface. Electrical errors can be caused by contaminates on the disk data tracks which affects the optical sensors. Quadrature error shall be specified in electrical degrees from 90°.

With the oscilloscope triggered by the rising (falling) edge of one output, the quadrature error shall be measured on the rising (falling) edge of the other output.

Copyright National Electrical Manufacturers Association
Provided by IHS under license with NEMA
No reproduction or networking permitted without license from IHS
Not for Resale

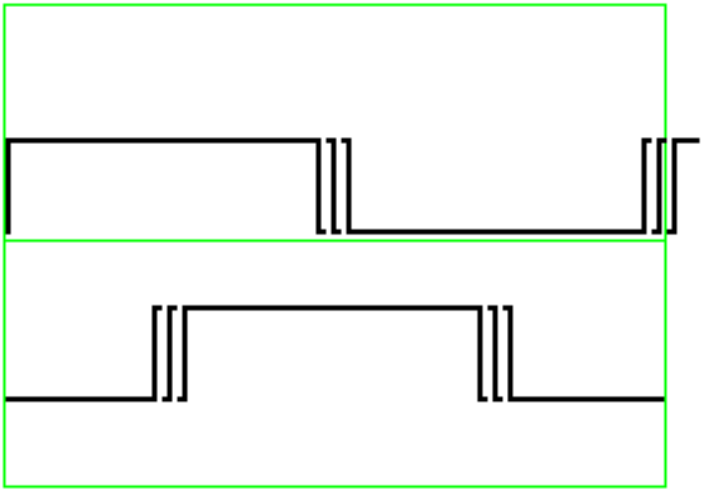

Figure 70 — Quadrature error on two channels

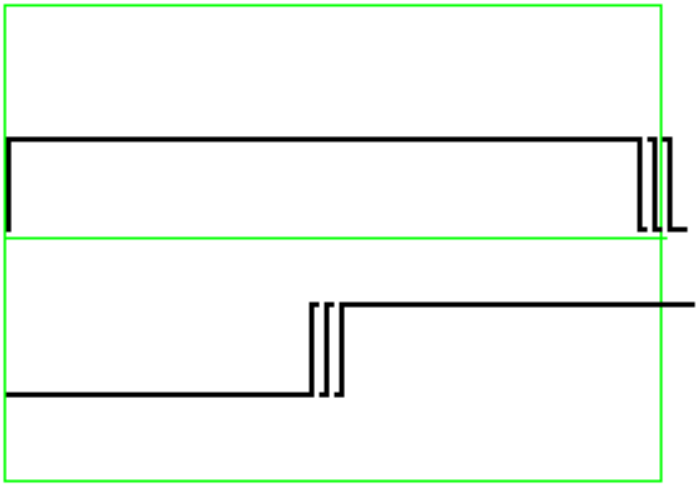

Figure 71 — Quadrature error on rising edge of channel B

--`,,`,`,,`,`,,`---

Copyright National Electrical Manufacturers Association
Provided by IHS under license with NEMA
No reproduction or networking permitted without license from IHS
Not for Resale

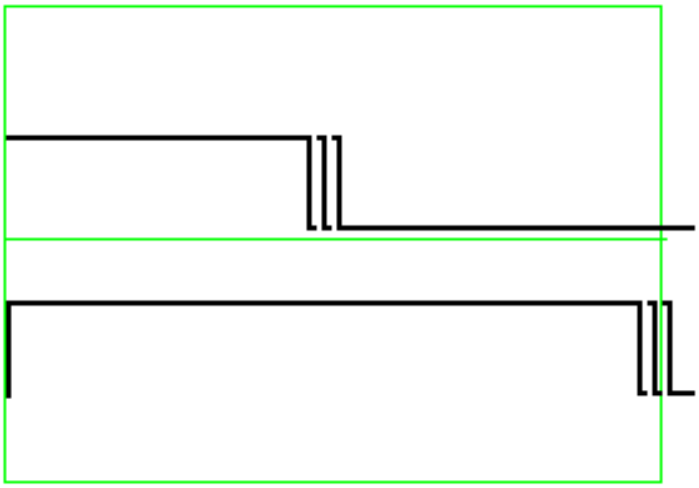

Figure 72 — Quadrature error on falling edge of channel A

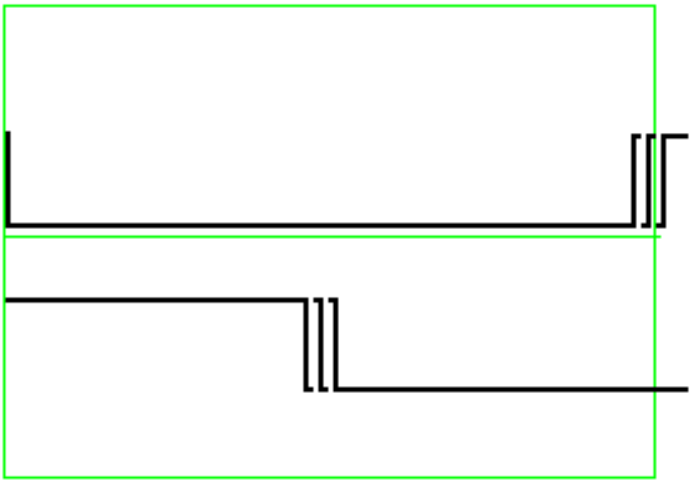

Figure 73 — Quadrature error on falling edge of channel B

Copyright National Electrical Manufacturers Association
Provided by IHS under license with NEMA
No reproduction or networking permitted without license from IHS
Not for Resale

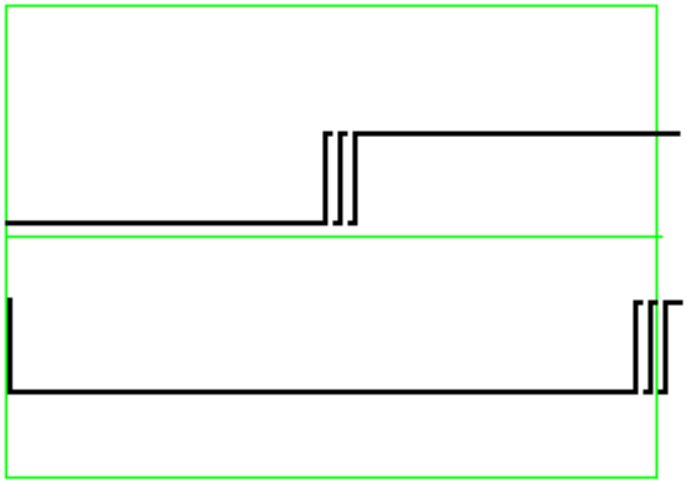

Figure 74 — Quadrature error on rising edge of channel A

6.1.1.15.7 Index pulse width

The index pulse width and the relationship to channels A and B shall be measured either by using an oscilloscope with a third input or by using two resistors to sum signals A and B. If the oscilloscope has the third input channel, then the index output of the encoder shall be connected to this input. Channel 3 of the oscilloscope shall be set to trigger on the positive transition. See Figures 75 to 77.

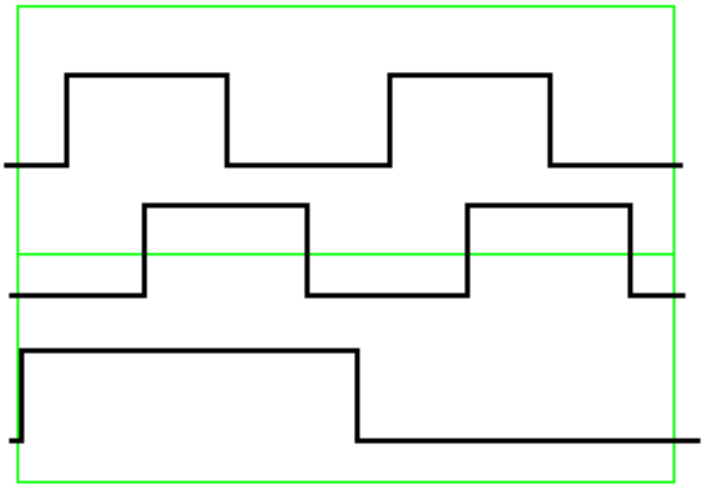

Figure 75 — Ungated index (360°)

--`,,`,,`-`-`,,`,,`,`,,`---

Copyright National Electrical Manufacturers Association
Provided by IHS under license with NEMA
No reproduction or networking permitted without license from IHS
Not for Resale

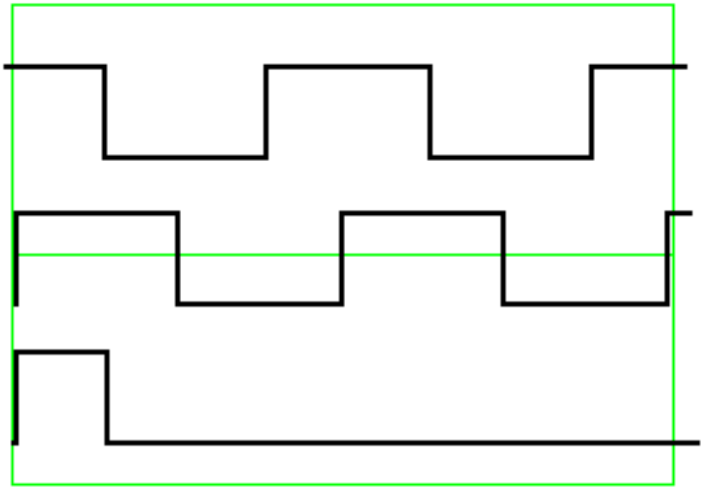

Figure 76 — Gated index with channels A & B high (90°)

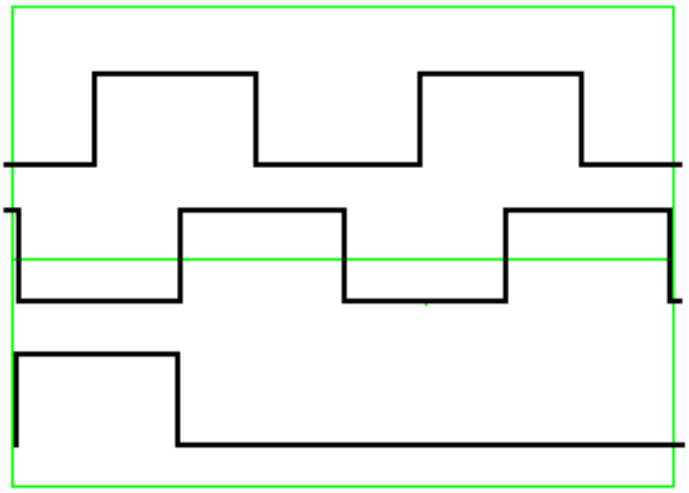

Figure 77 — Gated index with channel B low (180°)

NOTE Figures 76 and 77 show that the index edges coincide with the edges of the channels A and B. Figure 75 shows the index occurring randomly with the channels A and B edges.

If the oscilloscope only has two inputs, channels A and B shall be connected to one input of the oscilloscope by using a voltage divider composed of two series resistors of the same value as shown in Figure 78.

Copyright National Electrical Manufacturers Association
Provided by IHS under license with NEMA
No reproduction or networking permitted without license from IHS
Not for Resale

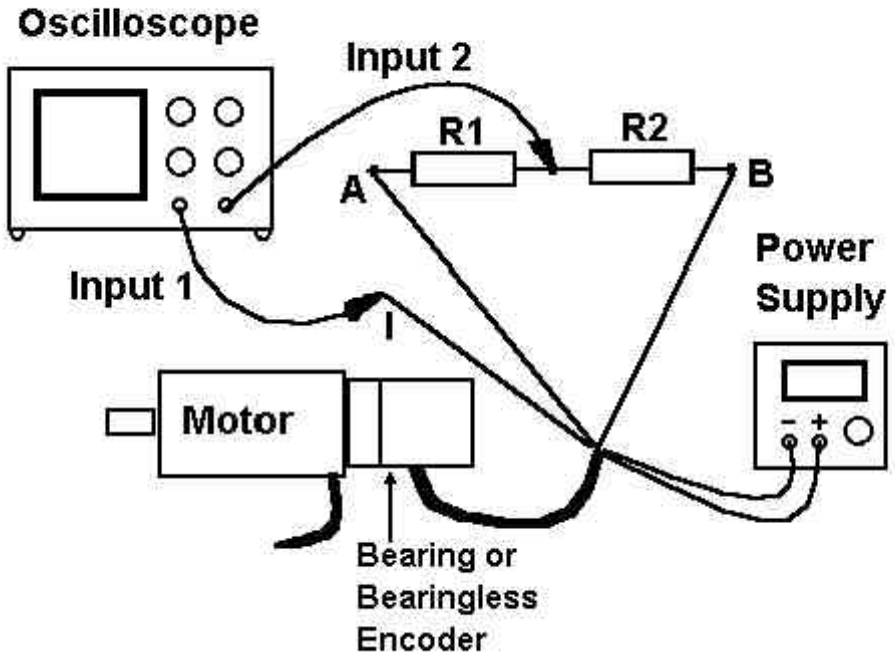

Figure 78 — Testing index using two-input oscilloscope

The procedure for testing index using a two-input oscilloscope is as follows:

a) connect two 1 Kohm resistors in series to form a series resistor network;

b) connect input 1 of oscilloscope to index output of encoder;

c) connect input 2 of oscilloscope to junction of the 2 resistors;

d) connect channel A of encoder to one end of the series resistor network;

e) connect channel B of encoder to the other end of the series resistor network;

f) connect power to encoder and motor;

g) trigger oscilloscope for input 1;

h) adjust speed of motor or sweep rate of oscilloscope to see the waveforms in Figures 79 to 81.

Copyright National Electrical Manufacturers Association
Provided by IHS under license with NEMA
No reproduction or networking permitted without license from IHS
Not for Resale

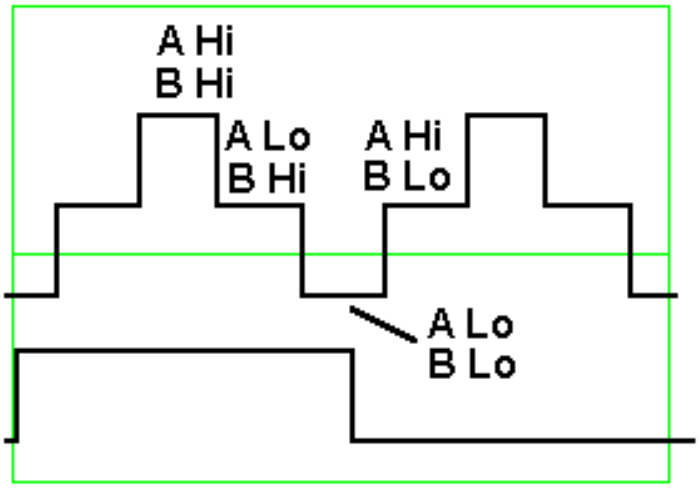

Figure 79 — Ungated index (360°)

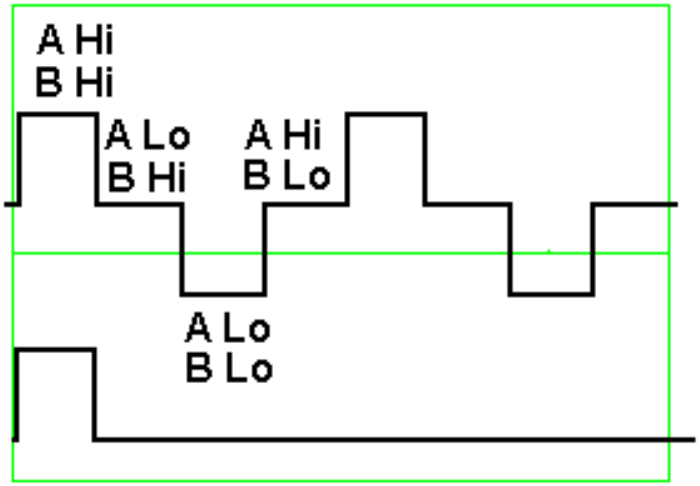

Figure 80 — Gated index with channels A and B high (90°)

Copyright National Electrical Manufacturers Association
Provided by IHS under license with NEMA
No reproduction or networking permitted without license from IHS
Not for Resale

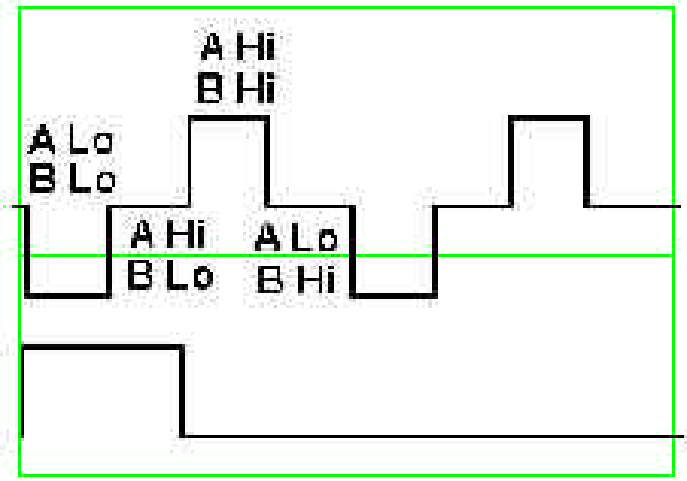

Figure 81 — Gated index with channel B low (180°)

6.1.1.15.8 Line count verification for encoders with index

The line count shall meet the manufacturer's stated line count. Line count may be verified by use of a counter or by using any of the methods described in this subclause.

The following steps may be performed for line count verification when the encoder has the index output.

a) Install encoder to motor if not installed.

b) Connect channel A of encoder to input 1 of oscilloscope.

c) Connect Index of encoder to input 2 of oscilloscope.

d) Apply power to encoder.

e) Apply power to motor.

f) Trigger oscilloscope for input 1.

g) Adjust motor speed for waveform as shown in Figure 86.

h) Measure time period for channel A. Record time period.

i) Trigger oscilloscope for input 2. Observe index as in Figure 82.

j) Adjust sweep of oscilloscope until 2 index pulses are observed as in Figure 83.

k) Measure the time period between 2 index pulses.

l) Divide the time period for 2 index pulses by the time period of channel A to obtain resolution of encoder.

Copyright National Electrical Manufacturers Association
Provided by IHS under license with NEMA
No reproduction or networking permitted without license from IHS
Not for Resale

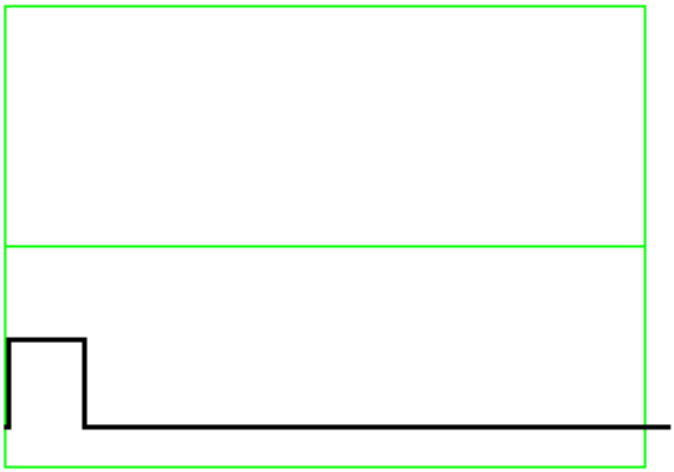

Figure 82 — Single index

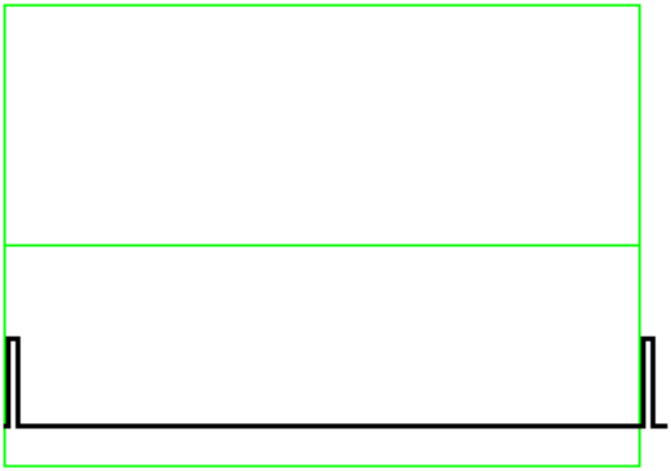

Figure 83 — Two index pulses

6.1.1.15.9 Line count verification for encoders without index and no greater than 256 pulses per revolution

a) Install encoder to motor if not installed.

b) Make indicator mark on motor shaft and face so that 1 revolution can be detected. See Figure 84.

c) Connect channel A of encoder to input 1 of the oscilloscope.

d) Rotate motor or encoder shaft CCW very slowly, not allowing the motor shaft to reverse direction.

--`,,`,,`-`-`,,`,,`,`,,`---

Copyright National Electrical Manufacturers Association
Provided by IHS under license with NEMA
No reproduction or networking permitted without license from IHS
Not for Resale

e) Count each rising edge of the signal observed on input 1 of the oscilloscope.

f) When the line on the shaft's tape of lines up with the line on face's tape, the count will be the resolution of the encoder.

g) To achieve a more precise count, rotate shaft 10 revolutions and divide total count by 10.

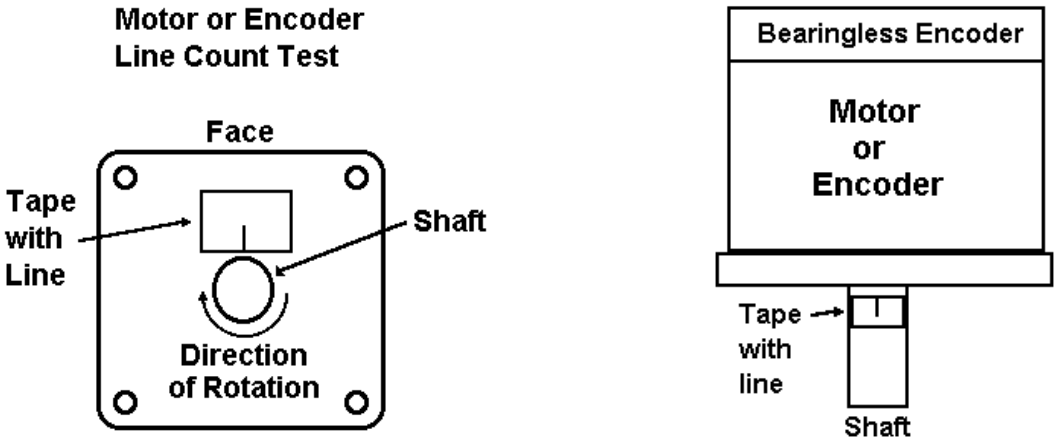

Figure 84 — Marking motor or encoder for one revolution

6.1.1.15.10 Line count verification for encoders without index and greater than 256 pulses per revolution

This test requires the use of a motor with an encoder installed of known resolution. This motor is used to drive the encoder to be tested. See Figure 85.

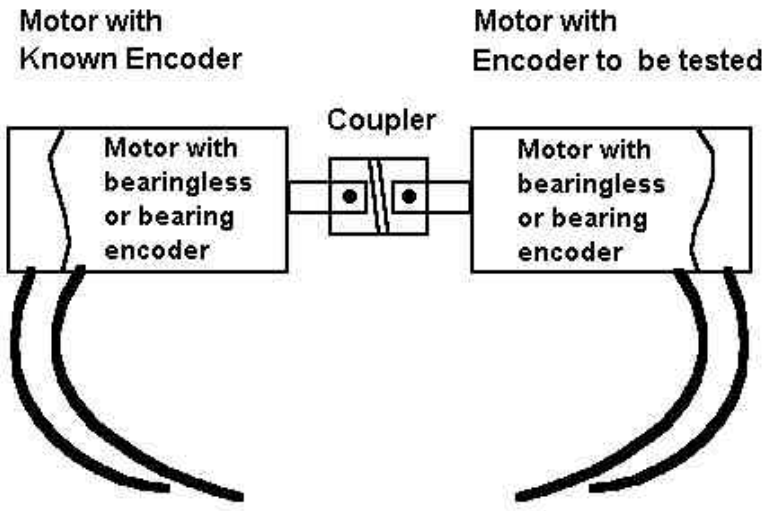

Figure 85 — Test setup for verifying encoder resolutions greater than 256 pulses per revolution

Copyright National Electrical Manufacturers Association
Provided by IHS under license with NEMA
No reproduction or networking permitted without license from IHS
Not for Resale

a) Connect encoder with known resolution to power supply with voltage set to meet the encoder specifications.

b) Connect Channel A of encoder to input 1 of the oscilloscope.

c) Trigger oscilloscope for input 1.

d) Apply voltage from an adjustable power supply to motor leads of motor with encoder of known resolution.

e) Adjust power supply so that motor rotates at fixed rpm.

f) Measure time period for the signal on the known encoder per Figure 86.

g) Connect encoder with unknown resolution to power supply with voltage set to meet the encoder specifications.

h) Connect Channel A of encoder to input 2 of oscilloscope.

i) Trigger oscilloscope for input 2.

j) Measure time period for the signal on the unknown encoder per Figure 86.

k) Divide the time period for the known encoder by the time period for the unknown encoder and multiply the result by the known resolution to calculate the unknown encoder resolution.

6.1.1.15.11 Encoder output voltage levels

The voltage levels of the output signals on an encoder shall be measured by connecting the oscilloscope to display a waveform to be compared with the waveform shown in Figure 60.

6.1.1.15.12 Encoder current consumption

Encoder current consumption shall be measured by connecting an ammeter in series with the positive power input to the encoder with outputs properly terminated. Apply power to the encoder and measure current when all outputs are at logic low. This is usually the condition with the highest current requirement.

6.1.1.15.13 Encoder supply voltage

Encoder supply voltage shall be measured by performing the following steps:

a) connect a voltmeter at the power input terminals of the encoder;

b) connect the encoder to its power source;

c) properly terminate the outputs;

d) apply the manufacturer’s specified minimum and maximum voltages;

e) verify proper encoder operation.

Copyright National Electrical Manufacturers Association
Provided by IHS under license with NEMA
No reproduction or networking permitted without license from IHS
Not for Resale

6.1.1.15.14 Frequency measurements

The maximum rpm allowed is dependent on either the motor or encoder capability. The maximum frequency obtainable can be limited by the maximum rpm allowed by the motor or encoder, and can be less than the maximum frequency of the encoder. On high resolution encoders, the maximum rpm can be limited by the encoder.

The procedure in 6.1.1.15.10 shall be used to measure the time period of the encoder output. Convert the time period (see Figure 86) to frequency using the following equation:

frequency = 1/ time period

EXAMPLE If the time period for 1 cycle of the encoder output is 10 µsec, then the frequency is 100 kHz.

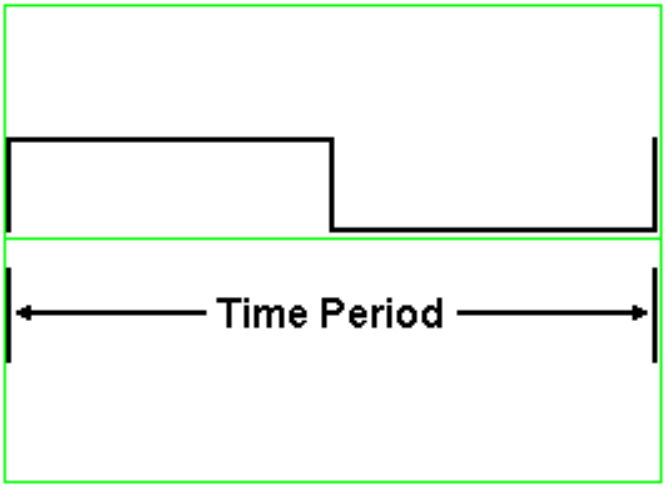

Figure 86 — Time period for encoder signal output

Table 27 — Conversion of time periods/frequency and resolution to rpm

Resolution (cycles per rev.) / Time Period/ Frequency	100 (rpm)	250 (rpm)	500 (rpm)	1000 (rpm)	2000 (rpm)	2500 (rpm)
1 msec/1 kHz	600	240	120	60	30	24
100 µsec/10 kHz	6000	2400	1200	600	300	240
10 µsec/100 kHz	*60000*	*24000*	*12000*	6000	3000	2400
5 µsec/200 kHz	*N/A*	*48000*	*24000*	*12000*	6000	4800
4 µsec/250 kHz	*N/A*	*60000*	*30000*	*15000*	*7500*	6000
2 µsec/500 kHz	*N/A*	*N/A*	*60000*	*30000*	*15000*	*12000*

NOTE The rpm in italics are for motor speeds greater than 6000 rpm. Consult motor manufacturer for motors that can meet these speeds.

--`,,`,,`-`-`,,`,,`,`,,`---

Copyright National Electrical Manufacturers Association
Provided by IHS under license with NEMA
No reproduction or networking permitted without license from IHS
Not for Resale

6.1.1.15.15 Symmetry of commutation channels on encoders

Symmetry of the commutation channels shall be checked by adjusting the oscilloscope for one cycle of the encoder output signal shown across the oscilloscope screen. The oscilloscope shall be set to trigger on the positive transition. An example of ideal symmetry is shown in Figure 87. The encoder manufacturer shall specify the symmetry tolerance of the 1/2 cycle, in degrees.

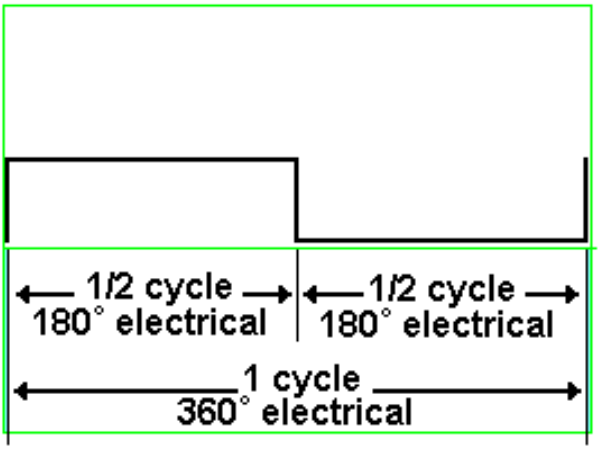

Figure 87 — Symmetry of an encoder commutation output signal

6.1.1.15.16 Relationship of commutation channels

The relationship of the commutation channels shall be checked by connecting S1 to channel 1, S2 to channel 2 and S3 to channel 3 of the oscilloscope. Channel 1 of the oscilloscope shall be set to trigger on the positive transition. Verify that the other two commutation outputs meet the manufacturer's specifications. If the oscilloscope only has two inputs, check S1 - S2, S1 - S3, and S2 - S3 to verify proper specifications. Figure 88 displays 120 degree commutation.

NOTE If desired, the same tests as detailed in 6.1.1.15.5 through 6.1.1.15.8 may be done for the commutation signals.

Copyright National Electrical Manufacturers Association
Provided by IHS under license with NEMA
No reproduction or networking permitted without license from IHS
Not for Resale

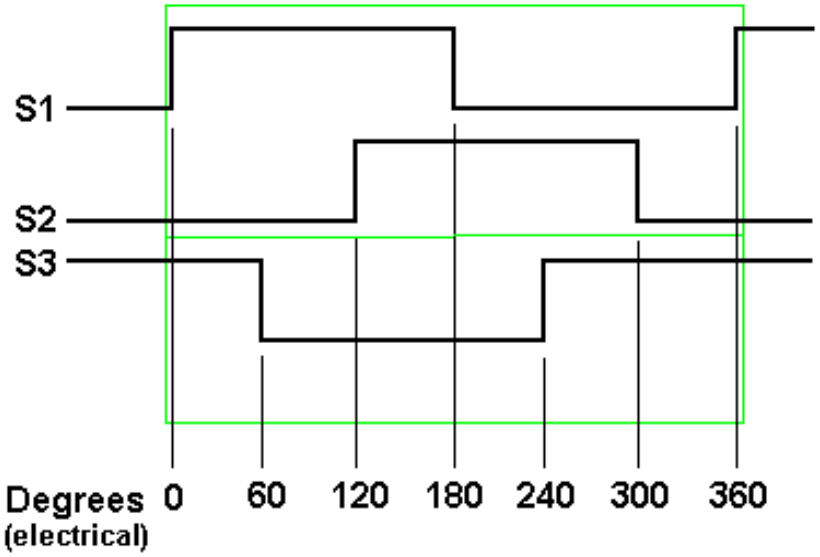

Figure 88 — 120 degree electrical commutation signal relationships

6.1.2 Requirements specific to bearing type encoders

The requirements in this subclause apply to encoders of the bearing type. These include shafted, C-face, and hollow shaft types.

6.1.2.1 Space requirements for shaft encoders

The manufacturer of the shaft encoder shall provide the dimensions that specify the space requirements for the encoder. Figure 89 shows the typical format for this information.

The user shall consider the length of the mating connector as well as the cable bend radius in determining overall space requirements.

6.1.2.2 Mounting requirements for shaft encoders

Shaft encoders come in both square flange and servo mount configurations. The manufacturer of the shaft encoder shall provide the dimensions that specify the mounting requirements of the encoder. Figure 90 shows the typical format for this information for the square flange shaft encoder. Figure 91 shows the typical format for a servo mount with groove to mount the encoder. Figure 92 shows the typical format for a servo mount with an extended flange (servo ring) to mount the encoder. The dimensions and tolerances for standard configurations shown in Tables 28 and 29 shall apply.

Copyright National Electrical Manufacturers Association
Provided by IHS under license with NEMA
No reproduction or networking permitted without license from IHS
Not for Resale

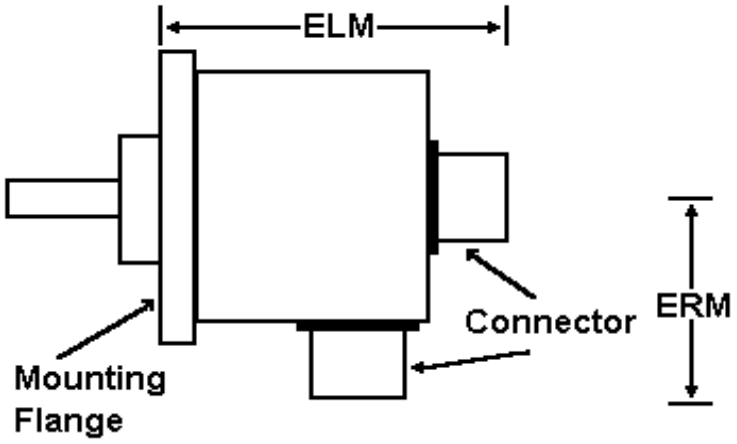

Legend

ELM	Encoder Length
ERM	Encoder Radius

Figure 89 — Format for presenting space requirements for shaft encoder

Table 28 — Shaft encoder dimensions

Dimension	Size 11 inches (mm)	Size 15 inches (mm)	Size 20 inches (mm)	Size 23 inches (mm)	Size 25 inches (mm)
Encoder Diameter	1.1 (27.94)	1.6 (40.64)	2.0 (50.80)	2.3 (58.42)	2.5 (63.50)
Encoder Square Flange Length	1.1 (27.94)	1.536 (39.02)	2.06 (52.33)	2.37 (60.198)	2.65 (67.31)
All other dimensions shall be specified by the manufacturer's literature.					

Table 29 — Shaft diameters, inch and metric

Nominal (inches)	Min./Max. (inches)		Nominal (mm)	Min./Max. (mm)
1/8	.1244/.1247		6	5.99/6.00
1/4	.2495/.2497		8	7.99/8.00
3/8	.3745/.3747		10	9.99/10.00

--`,,`-`-`,,`,,`,`,,`---
Copyright National Electrical Manufacturers Association
Provided by IHS under license with NEMA
No reproduction or networking permitted without license from IHS
Not for Resale

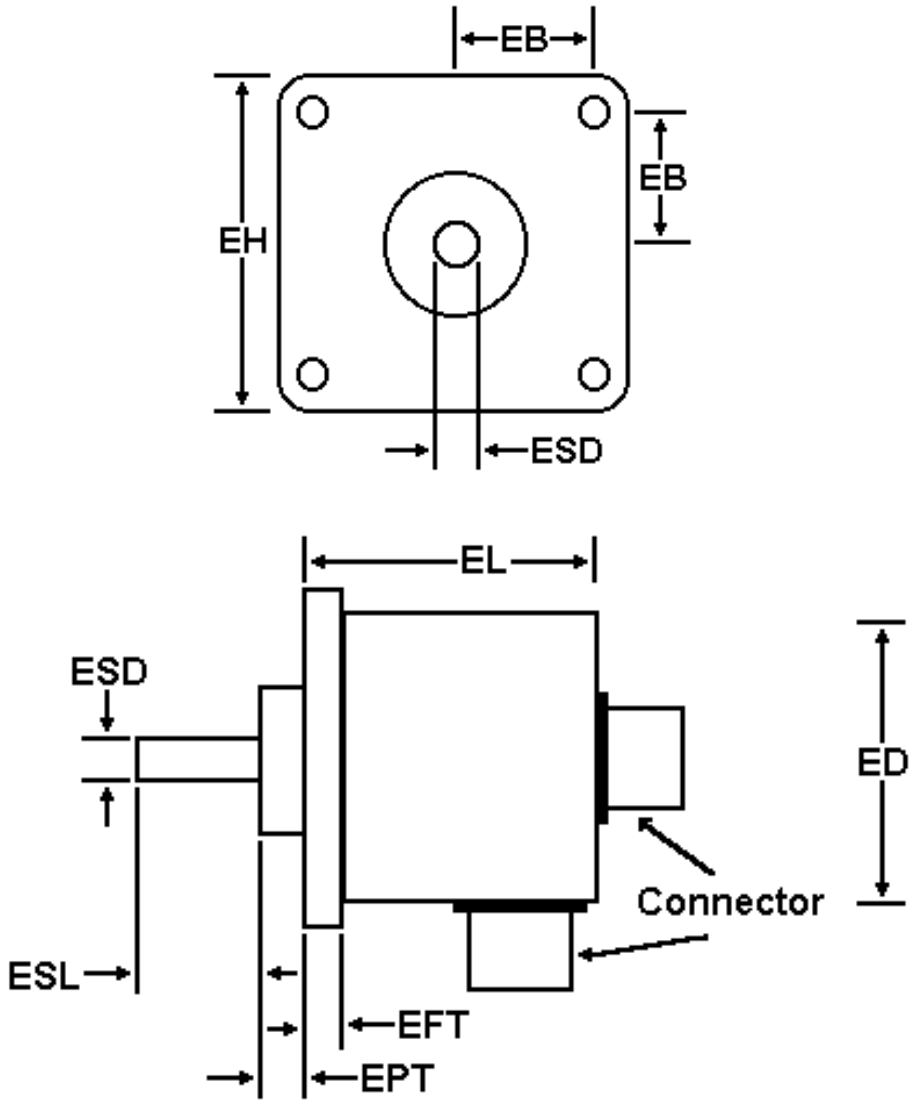

Legend

EB	Encoder Bolt Hole Location	EFT	Encoder Flange Thickness
ED	Encoder Diameter	EPT	Encoder Pilot Thickness
EL	Encoder Length	ESD	Encoder Shaft Diameter
EH	Encoder Square Flange Length	ESL	Encoder Shaft Length

Figure 90 — Format for presenting mounting requirements for square flange shaft encoder

Copyright National Electrical Manufacturers Association
Provided by IHS under license with NEMA
No reproduction or networking permitted without license from IHS
Not for Resale

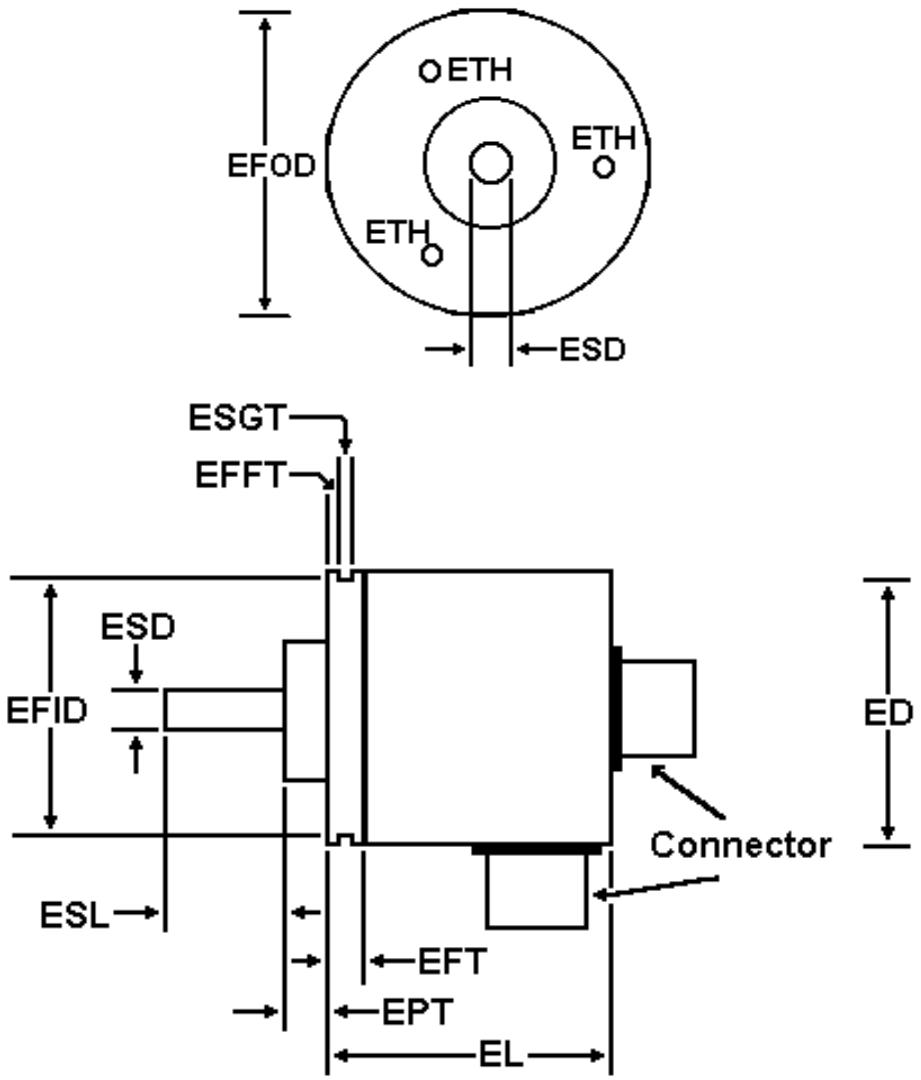

Legend

ED	Encoder Diameter
EFID	Encoder Flange Inner Diameter
EFFT	Encoder Front Flange Thickness
EFT	Encoder Flange Thickness
EFOD	Encoder Flange Outer Diameter
EL	Encoder Length
EPT	Encoder Pilot Thickness
ESD	Encoder Shaft Diameter
ESGT	Encoder Servo Groove Thickness
ESL	Encoder Shaft Length
ETH	Encoder Threaded Hole Location and Size

Figure 91 — Format for presenting mounting requirements for flange shaft encoder with servo groove

Copyright National Electrical Manufacturers Association
Provided by IHS under license with NEMA
No reproduction or networking permitted without license from IHS
Not for Resale

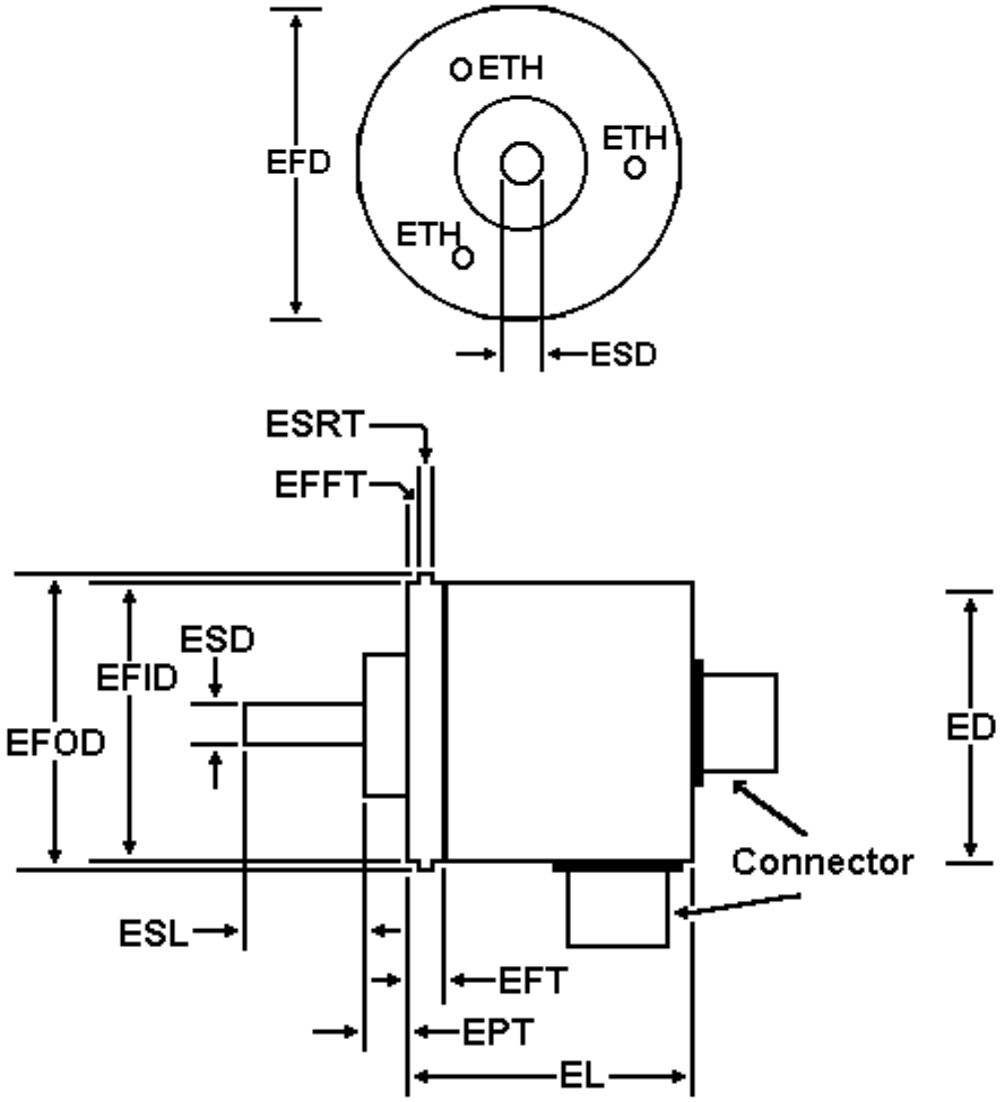

Legend

ED	Encoder Diameter
EFID	Encoder Flange Inner Diameter
EFFT	Encoder Front Flange Thickness
EFT	Encoder Flange Thickness
EFOD	Encoder Flange Outer Diameter
EL	Encoder Length
EPT	Encoder Pilot Thickness
ESD	Encoder Shaft Diameter
ESRT	Encoder Servo Ring Thickness
ESL	Encoder Shaft Length
ETH	Encoder Threaded Hole Location and Size

Figure 92 — Format for presenting mounting requirements for flange shaft encoder with servo ring (extended flange)

Copyright National Electrical Manufacturers Association
Provided by IHS under license with NEMA
No reproduction or networking permitted without license from IHS
Not for Resale

6.1.2.3 Space requirements for C-face encoders

The manufacturer of the C-face encoder shall provide the dimensions that specify the space requirements of the encoder. Figures 93 and 94 show the typical format for this information.

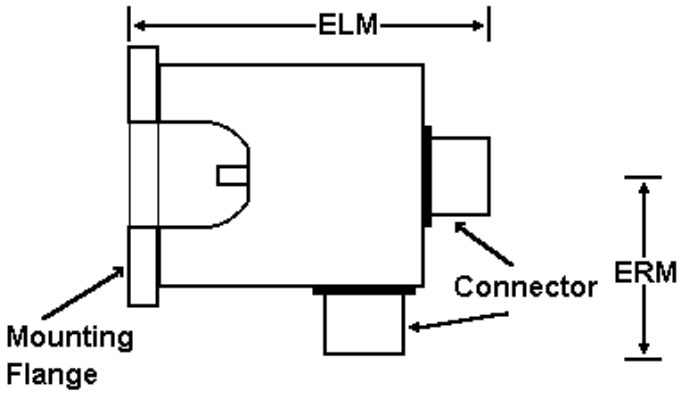

Legend

ELM	Encoder Length
ERM	Encoder Radius

Figure 93 — Format for presenting space requirements for a C-Face encoder with a connector configuration

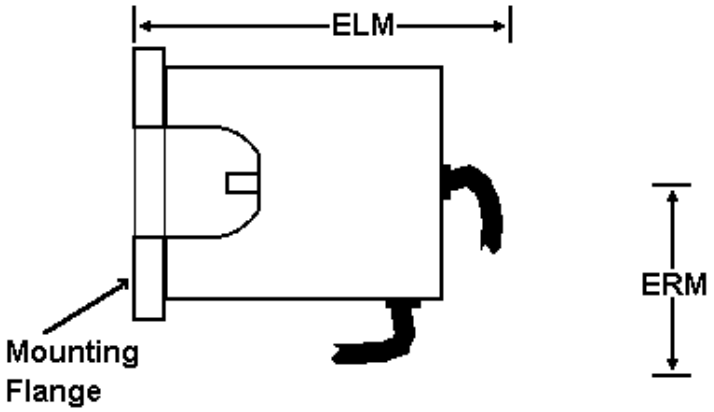

Legend

ELM	Encoder Length (includes cable bend radius on cable exit configurations)
ERM	Encoder Radius (includes cable bend radius on cable exit configurations)

Figure 94 — Format for presenting space requirements for a C-Face encoder with a cable exit configuration

6.1.2.4 Mounting requirements for C-face encoders

The manufacturer of the C-face encoder shall provide the dimensions that specify the mounting requirements of the encoder. Figure 95 shows the typical format for this information. The dimensions and tolerances for standard configurations shown in Tables 30 shall apply.

--`,,`-`-`,,`,,`,`,,`---
Copyright National Electrical Manufacturers Association
Provided by IHS under license with NEMA
No reproduction or networking permitted without license from IHS
Not for Resale

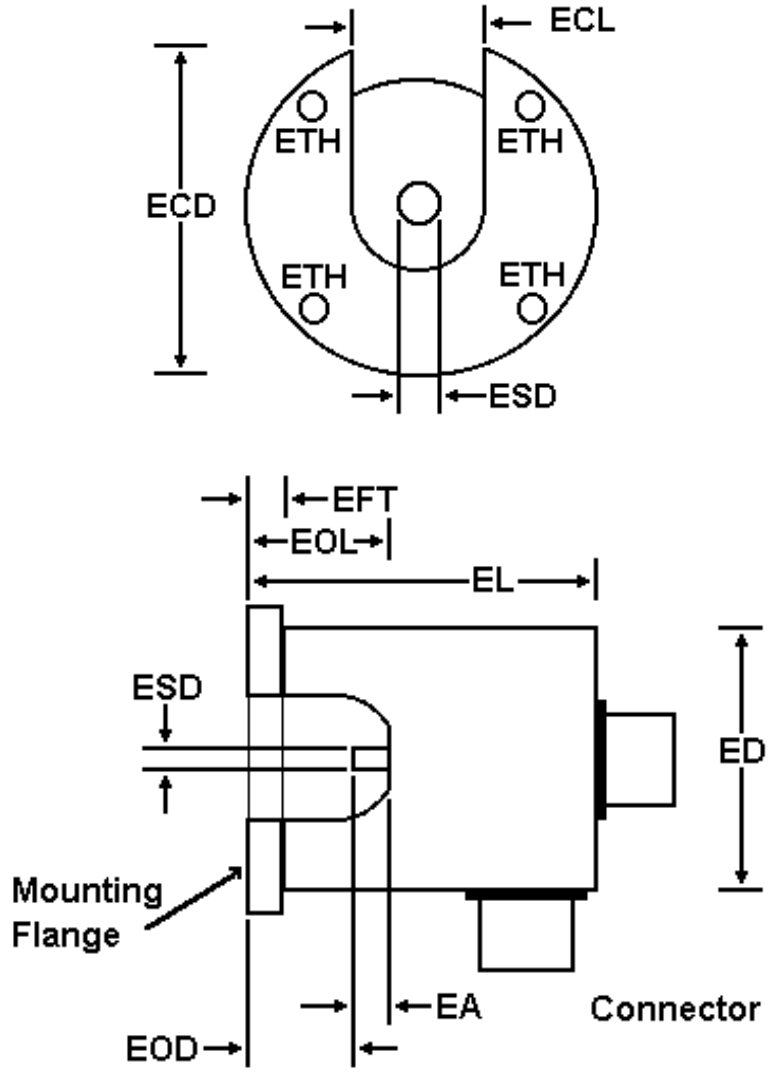

NOTE The cable exit configuration is not shown; all dimensions for this configuration are the same as for the connector configuration.

Legend

EA	Encoder Shaft Length
ED	Encoder Diameter
EL	Encoder Length
ECD	Encoder C-Face Diameter
ECL	Encoder C-Face Shaft Access Opening Length
EFT	Encoder Flange Thickness
EOD	Encoder C-Face Mounting Surface to End of Shaft Distance
EOL	Encoder Maximum Input Shaft Length
ESD	Encoder Shaft Diameter
ETH	Encoder Threaded or Non-threaded Hole Location and Size (may be through hole)

Figure 95 — Format for presenting mounting requirements for a C-Face encoder

Copyright National Electrical Manufacturers Association
Provided by IHS under license with NEMA
No reproduction or networking permitted without license from IHS
Not for Resale

Table 30 — C-Face encoder dimensions

Dimension	Size 15 inches (mm)	Size 20 inches (mm)	Size 23 inches (mm)	Size 25 inches (mm)
Encoder Diameter	1.6 (40.64)	2.0 (50.80)	2.3 (58.42)	2.5 (63.50)
Encoder C-Face Diameter	2.18 (55.372)	3.25 (82.55)	3.25 (82.55)	3.25 (82.55)
All other dimensions shall be specified by manufacturer's literature.				

See Table 29 for motor shaft diameters.

The manufacturer shall specify minimum and maximum length of motor shaft entry into coupling.

Consult the manufacturer for recommended couplers to mate between the C-face flange encoders and drive shaft.

6.1.2.5 Space requirements for hollow shaft encoders

The manufacturer of the hollow shaft encoder shall specify the space requirements of the encoder. Figure 96 shows the typical format for this information. The hollow shaft encoder is mounted directly onto the motor shaft. Some form of anti-rotation device such as a flex coupling or tether must be provided between the motor body and encoder body. The dimensions and tolerances for standard configurations shown in Table 31 shall apply.

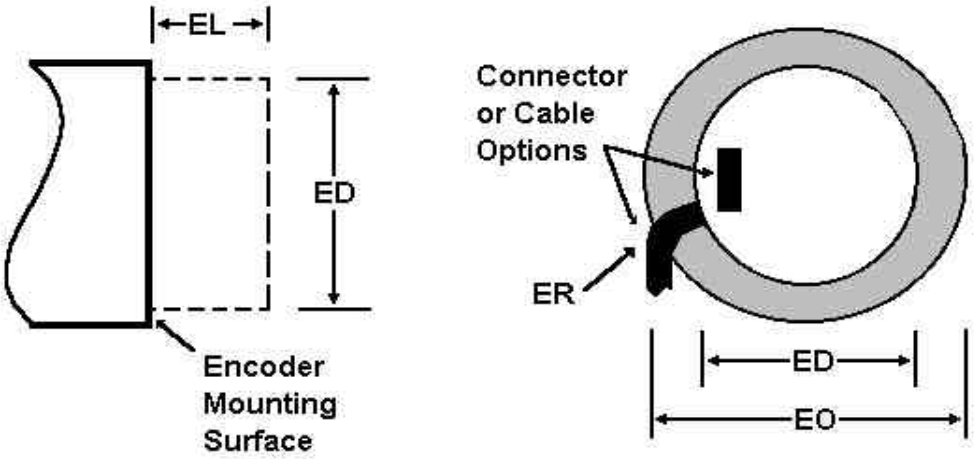

Legend
ED Encoder Inside Diameter
EO Encoder Outside Diameter
EL Encoder Length
ER Encoder Cable Bend Radius

Figure 96 — Format for presenting space requirements for hollow shaft encoders

Copyright National Electrical Manufacturers Association
Provided by IHS under license with NEMA
No reproduction or networking permitted without license from IHS
Not for Resale

6.1.2.6 Mounting requirements for hollow shaft encoders

The manufacturer of a hollow shaft encoder shall specify the mounting requirements of the encoder. See Figure 97 for the typical configurations of through and non-through hollow shaft encoders. Figures 98 and 99 show the typical format for showing mounting information. The dimensions shown in Table 31 shall apply.

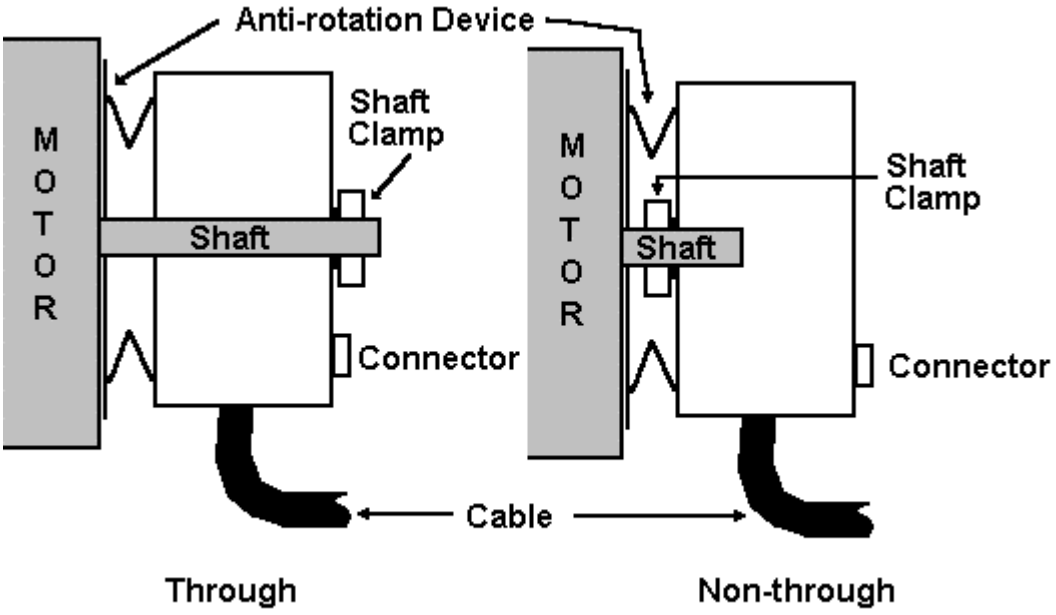

Figure 97 — Hollow shaft encoder configurations, through and non-through

Table 31 — Hollow shaft encoder dimensions

Encoder Size	Diameter Inches (mm)	Length
15	1.5 (38.1)	Manufacturer shall specify
18	1.88 (47.752)	Manufacturer shall specify
22	2.22 (56.388)	Manufacturer shall specify
25	2.5 (63.5)	Manufacturer shall specify
35	3.5 (88.9)	Manufacturer shall specify

See Table 29 for motor shaft diameters.

The manufacturer shall specify shaft lengths required for through and non-through hollow shaft encoders.

The manufacturer shall specify the shape and requirements for the anti-rotation device used on the hollow shaft encoder.

Copyright National Electrical Manufacturers Association
Provided by IHS under license with NEMA
No reproduction or networking permitted without license from IHS
Not for Resale

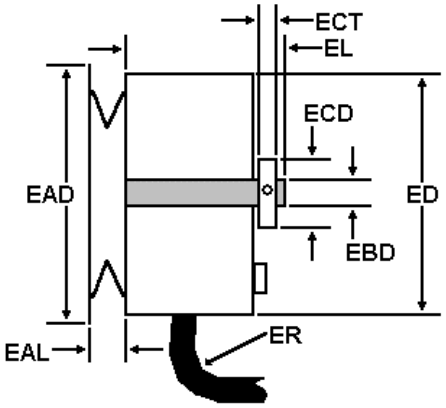

Legend

EAD	Encoder Anti-rotation Device Diameter
EAL	Encoder Anti-rotation Device Length
EBD	Encoder Bore Diameter
ECD	Encoder Shaft Clamp Diameter
ECT	Encoder Shaft Clamp Length
ED	Encoder Diameter
EL	Encoder Length
ER	Encoder Cable Radius

Figure 98 — Format for presenting mounting requirements for through hollow shaft encoders

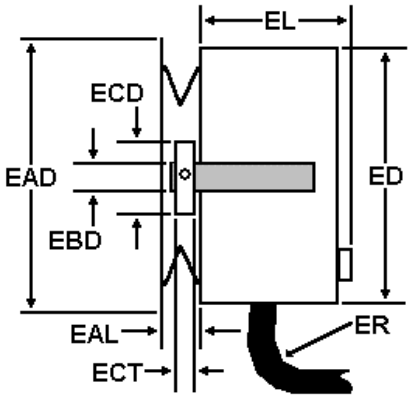

Legend

EAD	Encoder Anti-rotation Device Diameter
EAL	Encoder Anti-rotation Device Length
EBD	Encoder Bore Diameter
ECD	Encoder Shaft Clamp Diameter
ECT	Encoder Shaft Clamp Length
ED	Encoder Diameter
EL	Encoder Length
ER	Encoder Cable Radius

Figure 99 — Format for presenting mounting requirements for non-through hollow shaft encoders

Copyright National Electrical Manufacturers Association
Provided by IHS under license with NEMA
No reproduction or networking permitted without license from IHS
Not for Resale

6.1.2.7 Tests for absolute encoders

6.1.2.7.1 General

The tests specified in 6.1.2.7 pertain only to encoders of the absolute bearing type. Measurements from these tests shall meet the specifications determined by the encoder manufacturer.

The test equipment shall be capable for performing the following tests:

a) sequential count verification;
b) frequency response.

These tests shall be performed in an environmental chamber to determine the encoder's minimum and maximum operating temperature ratings.

6.1.2.7.2 Sequential count verification

The counting sequence of an absolute encoder shall be checked by running the encoder drive motor at a predetermined speed and looking at the encoder outputs with a logic analyzer. The logic analyzer shall be set to trigger on the "0" word and record all the words through the full sequence of the encoder counts. For high resolution absolute encoders, the logic analyzer may need to take several sets of data to read the entire count sequence. The encoder outputs shall be checked for correct count sequence and for no missing or extra counts.

6.1.2.7.6 Frequency response

The frequency response is tested by running the drive motor at the speed which generates the encoder specified frequency response. The motor rpm is determined by the encoder resolution and specified frequency response. The relationship is as follows:

$$rpm = \frac{frequency\ \ response\ \ x\ \ 60}{resolution}$$

where frequency response is in cycles per second, and resolution is in cycles or words per turn.

The encoder shall meet the manufacturer's specifications at the motor rpm.

--`,,`,,`-`-`,,`,,`,`,,`---

Copyright National Electrical Manufacturers Association
Provided by IHS under license with NEMA
No reproduction or networking permitted without license from IHS
Not for Resale

6.1.3 Requirements specific to bearingless type encoders

The requirements in this subclause apply to encoders of the bearingless type (also known as modular or kit encoders) providing quadrature square wave output.

6.1.3.1 Space requirements for bearingless encoders

The manufacturer of the bearingless encoder shall provide the dimensions that specify the space requirements of the encoder. Figure 99 shows, for a non-commutating bearingless encoder, the typical format for this information.

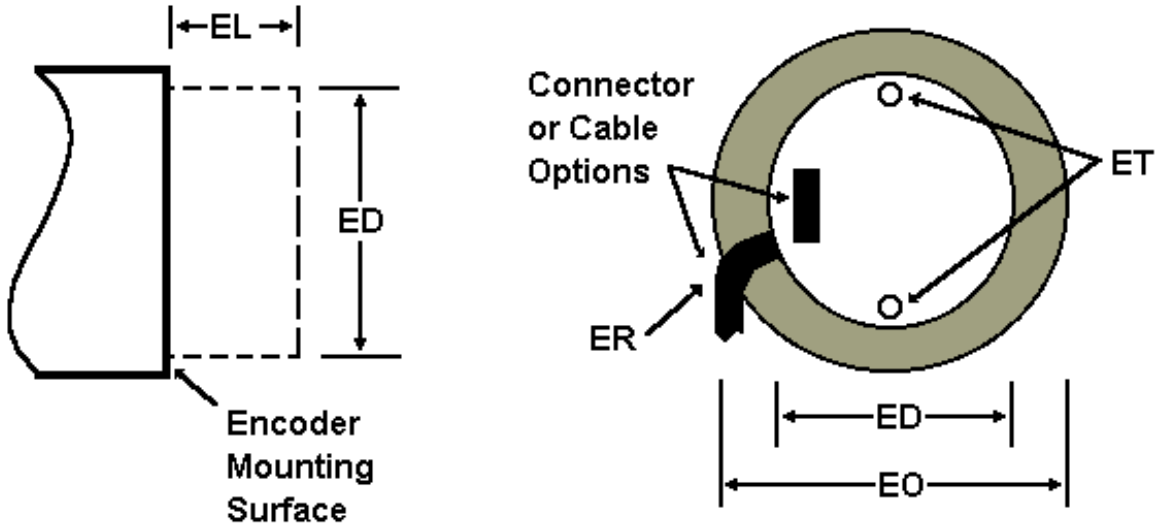

Legend

EL	Encoder Length
ED	Encoder Diameter
EO	Optional Space Requirements
ER	Minimum Cable Bend Radius
ET	Mounting Hole Location and Size

Figure 99 — Format for presenting space requirements for non-commutating bearingless encoders

6.1.3.2 Mounting requirements for bearingless encoders

The manufacturer shall indicate the mounting requirements for the encoder to be installed. Figure 101 shows, for a non-commutating bearingless encoder, a typical format for this information. The dimensions and appropriate tolerances in Tables 32 and 33 shall apply.

Copyright National Electrical Manufacturers Association
Provided by IHS under license with NEMA
No reproduction or networking permitted without license from IHS
Not for Resale

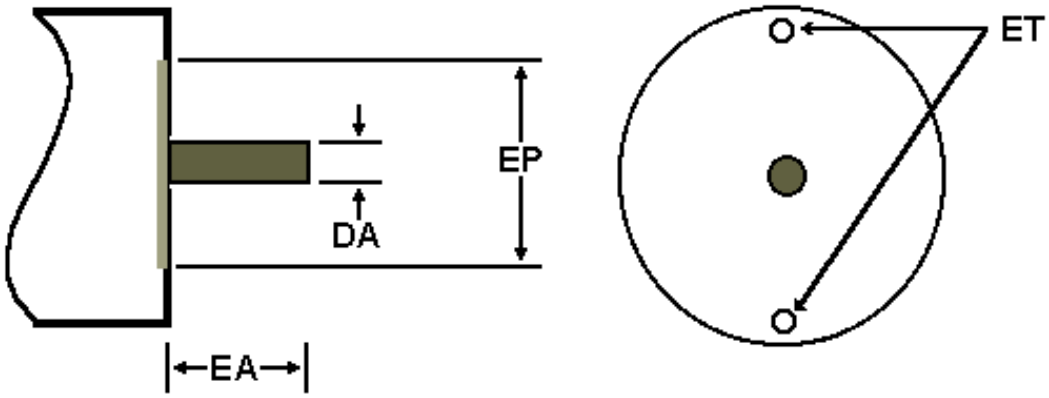

Legend

DA	Shaft Diameter
EA	Shaft Length
EP	Pilot Diameter (optional)
ET	Mounting Holes

Figure 101 — Format for presenting mounting requirements for bearingless encoders

Table 32 — Mounting dimensions for non-commutating bearingless encoders

Dimension	Size 9 inches (mm)	Size 15 Inches (mm)	Size 21 inches (mm)
Diameter (maximum)	1.0 (25.4)	1.6 (40.64)	2.2 (55.88)
Thread size	M1.60	2-56 or M2	4-40 or M2.5
Bolt circle diameter	.728 (18.5)	1.280 (32.51)	1.812 (46.02)
Perpendicularity	.002 (0.051)	.002 (0.051)	.002 (0.051)
NOTE Size 15 may have optional mounting tabs at size 21 mounting pattern.			

Table 33 — Mounting dimensions for commutating bearingless encoders

Encoder Specification	Size 9 inches (mm)	Size 15 inches (mm)	Size 21 inches (mm)
Diameter (Maximum)	1.0 (25.4)	1.6 (40.64)	2.2 (55.88)
Thread size	M1.60	2-56 or M2	4-40 or M2.5
Bolt circle diameter	.728 (18.5)	[a]	[a]
Perpendicularity	.002 (0.051)	.002 (0.051)	.002 (0.051)
[a] Bolt circle diameter is dependent on mounting method used to secure encoder to mounting surface. Consult manufacturer's literature for proper mounting hardware and mounting requirements.			

Copyright National Electrical Manufacturers Association
Provided by IHS under license with NEMA
No reproduction or networking permitted without license from IHS
Not for Resale

6.1.3.3 Mounting surface runout (perpendicularity)

Runout for the encoder mounting surface is referenced with respect to the centerline of the motor shaft. The mounting surface of the motor with respect to the shaft centerline is 90 degrees. The encoder manufacturer shall specify the maximum allowable deviation required for proper mounting and operation of a rotary optical encoder. See Figure 102 and 4.1.2.6.

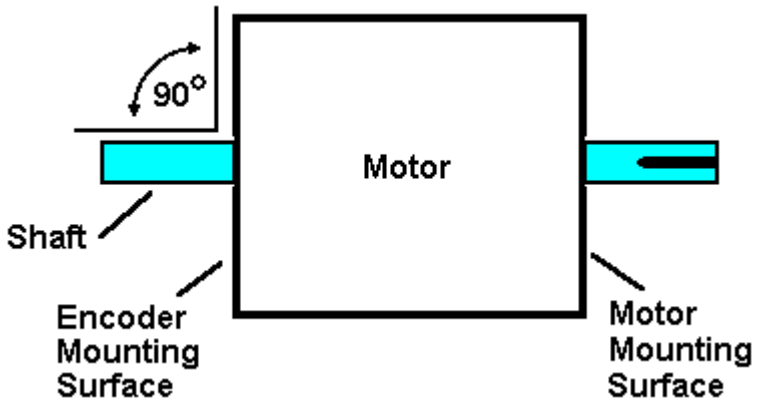

Figure 102 — Runout of motor mounting surface to motor shaft centerline

6.1.3.4 Allowable gap tolerance

The manufacturer shall specify the maximum allowable gap tolerance of the encoder disk both toward and away from the encoder mounting surface depending on manufacturer's design. See Figures 103 and 104. The manufacturer may specify gap tolerance as operational and/or non-operational.

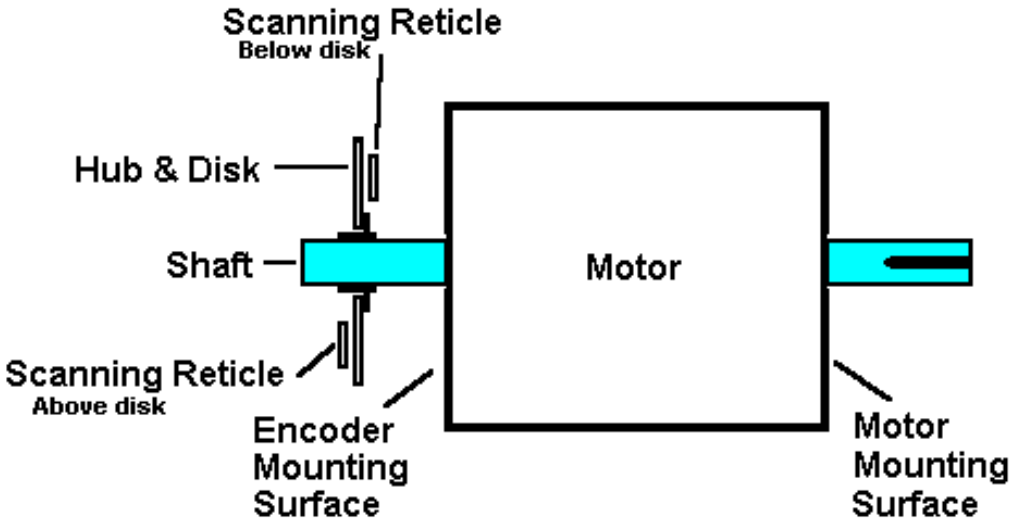

Figure 103 — Allowable gap misalignment

Copyright National Electrical Manufacturers Association
Provided by IHS under license with NEMA
No reproduction or networking permitted without license from IHS
Not for Resale

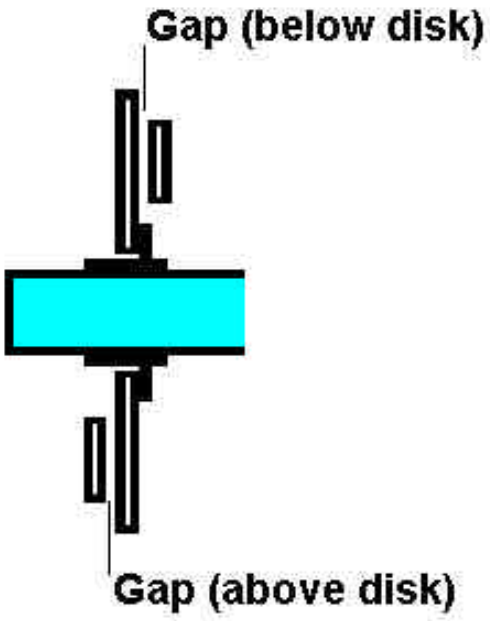

Figure 104 — Gap in bearingless encoder

6.2 Resolvers

6.2.1 Space and mounting requirements

6.2.1.1 Space requirements

The manufacturer shall provide the dimensions that specify the space requirements of the resolver. Table 34 shows the letter designators to describe these dimensions.

Table 34 — Description of dimensional designators

Designator	Description
RL	Resolver length
RD	Resolver diameter
RO	Optional space requirements
RR	Minimum cable radius

6.2.1.2 Mounting requirements

The manufacturer shall provide the mounting requirements to include shaft diameter, distance between mounting faces of stator and rotor, and appropriate mounting tolerances. The eccentricity, the shaft runout, the perpendicularity of the mounting surface with the motor shaft, and the axial end play shall also be indicated.

Dimensions for motor shaft diameters for resolvers shown in Table 35 shall apply.

Copyright National Electrical Manufacturers Association
Provided by IHS under license with NEMA
No reproduction or networking permitted without license from IHS
Not for Resale

Table 35 — Inch and metric shaft diameters

Shaft Diameters (inches)	Max/Min Diameter (inches)
1/4	0.24980/0.24945
3/8	[a]
1/2	[a]
Shaft Diameters (mm)	**Max/Min Diameter (mm)**
5	4.996/4.988
6	[a]
7	[a]
8	[a]
9	[a]
10	[a]
11	[a]
12	[a]
13	[a]
14	[a]
15	[a]
16	[a]
17	[a]
[a] under consideration	

The mounting dimensions for housed resolvers shown in Table 36 shall apply.

Table 36 — Mounting dimensions for housed resolvers

Resolver Specification (housed)	Designator	Size 8 inch (mm)	Size 11 inch (mm)
Pilot Diameter/Tolerance	RPD	[a]	1.0000/-.0005 (25.40/-0.013)
Flange Diameter/Tolerance	RFD	0.750 (19.05)	1.062/-0.001 (26.97/-0.025)
Flange Thickness/Tolerance	RFT	[a]	0.093/±0.005 (2.36±0.13)
Shaft Diameter/Tolerance	RSD	[a]	0.120/-0.0005 (3.05/-0.013)
[a] under consideration			

The mounting dimensions for frameless resolvers shown in Table 37 shall apply.

Table 37 — Mounting dimensions for frameless resolvers

Resolver Specification (frameless)	Designator	Size 11 inch (mm)	Size 15 inch (mm)	Size 21 inch (mm)
Pilot Diameter/Tolerance	RN	1.181 (30)	1.450 (36.83)	2.062 (52.40)
Flange Diameter/Tolerance	RP	[a]	[a]	[a]
Flange Thickness/Tolerance	RLA	[a]	[a]	[a]
[a] under consideration				

Copyright National Electrical Manufacturers Association
Provided by IHS under license with NEMA
No reproduction or networking permitted without license from IHS
Not for Resale

6.2.2 Connections and terminations

Resolvers are commonly terminated with discrete insulated leads

a) with or without connector,
b) with or without lead protection sleeving,
c) with or without shielded cable.

The manufacturer shall specify the type of connections supplied on the resolver and provide a pin out, color code, and function, if applicable.

6.2.3 Markings and data sheets

6.2.3.1 Information appearing on resolvers

The minimum information appearing on resolvers shall be:

a) manufacturer's model description or part number;
b) manufacturer's date code or serial number.

6.2.3.2 Resolver data sheet

The manufacturer shall provide a data sheet with the following information. Nominal values and tolerances or maximum values shall be specified for all information provided.

a) Electrical:
    1) primary windings (primary side);
    2) pole pairs
    3) transformation ratio ;
    4) input voltage;
    5) input current;
    6) input frequency;
    7) phase shift;
    8) null voltage;
    9) impedances Zro, Zrs, Zso, Zss;
    10) d.c. resistance;
    11) accuracy;
    12) accuracy ripple;
    13) electrical connections with drawing;
    14) hi-pot housing/winding;
    15) hi-pot winding/winding.

b) Mechanical:
    1) size (drawing with dimensions and tolerances);
    2) axial mounting tolerance;
    3) eccentricity tolerance;
    4) shaft runout tolerance;
    5) connections;
    6) maximum permissible speed;
    7) rotor moment of inertia;
    8) weight rotor/stator.

Copyright National Electrical Manufacturers Association
Provided by IHS under license with NEMA
No reproduction or networking permitted without license from IHS
Not for Resale

c) Environmental:
   1) temperature rating;
   2) humidity rating;
   3) shock;
   4) vibration;
   5) IP number (degree of protection) for housed resolvers.

6.2.4 Application information

The following are some of the important factors which should be considered by the user in the application of resolvers.

a) The method of mounting the resolver to the machine whose motion is being detected is a vital consideration because of possible errors or damage that can occur. Care should be taken that the eccentricity, the shaft runout, the perpendicularity of the mounting surface with the motor shaft and the axial end play, will be within limits as specified by the resolver manufacturer.

b) The moment of inertia of the rotor of the resolver may affect the dynamics of the motor system to which the resolver is installed.

c) Exceeding the maximum mechanical speed may cause permanent damage to the resolver.

d) Noise in the input power supply or output of a resolver may cause application problems. Some of the common means of minimizing such noise are grounding, twisted pairs, shielding, and isolation of leads.

e) Resolvers should be operated within the manufacturer's recommended operating conditions for supply and output voltage.

f) Care should be exercised when attaching the resolver to a heat generating device, such as a motor, to prevent damage to the resolver. The maximum temperature of the heat generating surface or the free air ambient, whichever is greater, should be considered when selecting resolver operating temperature range.

g) Other factors to be considered are:

   1) type, location, and accessibility of connections;
   2) mounting dimensions and type of mounting;
   3) input current, input frequency, phase shift requirements.

6.2.5 Tests and performance

6.2.5.1 Test equipment

Specialized test equipment used to test resolvers includes:

a) variable frequency power supply;

--`,,`,,`-`-`,,`,,`,`,,`---

Copyright National Electrical Manufacturers Association
Provided by IHS under license with NEMA
No reproduction or networking permitted without license from IHS
Not for Resale

b) resolver bridge;

c) phase angle voltmeter (PAV) or digital analyzing voltmeter (DAV);

d) dividing head;

e) variable frequency power supply;

f) device which can output variable frequencies.

The test equipment shall be capable of performing the following tests:

a) resolver accuracy—component level;

b) transformation ratio and phase shift;

c) null voltage;

d) impedances Zro, Zrs, Zso, Zss.

6.2.5.2 Test procedures

6.2.5.2.1 Resolver accuracy

Resolver accuracy shall be tested by either the voltage gradient method (preferred) or the voltage nulling method.

a) The voltage gradient method uses the fact that the error gradient of the DAV is linear for about one degree around the null point. Even angles, such as every 5 or 10 degrees, are set on the dividing head and resolver bridge. Since the null gradient is constant, this voltage can be measured with the phase angle voltmeter and translated directly into an angle.

b) In the voltage nulling method, the resolver under test is mounted in a dividing head which precisely controls angular shaft position 0. Either the dividing head or the resolver bridge is adjusted for an in phase (0° time phase) null on the phase angle voltmeter. True electrical angle is read directly on the bridge. Electrical error is the difference between this reading and the reading on the dividing head.

6.2.5.2.2 Transformation ratio, phase shift, null voltage

The following steps can be performed using a digital position control system with a 100,000 line encoder or divider head:

a) mount resolver onto motor per manufacturer’s instructions;

b) connect resolver output leads (S1, S2, S3, and S4);

c) connect resolver input leads (R1 and R2);

Copyright National Electrical Manufacturers Association
Provided by IHS under license with NEMA
No reproduction or networking permitted without license from IHS
Not for Resale

d) rotate motor shaft to a “null reading” of S1 and S2 on the test equipment;

e) compare the “null reading” obtained to the manufacturer’s specifications and adjust motor shaft runout if results are not satisfactory;

f) measure transformation ratio of the S3, S4 set of output leads;

g) rotate motor shaft 180° to the “null position” of the S3, S4 set of output leads;

h) measure transformation ratio of the S1, S2 set of output leads;

i) check sine-cosine readings of S1, S2, S3, S4 at several angular positions of the motor shaft.

6.2.5.3 Test acceptance criteria

Test measurements shall be within the limits specified by the manufacturer.

Copyright National Electrical Manufacturers Association
Provided by IHS under license with NEMA
No reproduction or networking permitted without license from IHS
Not for Resale

7 Safety requirements for construction, and guide for selection, installation, and operation of motion control systems

7.1 General considerations

Users and manufacturers of 1) driven equipment, 2) the motors, and 3) the electrical equipment for supplying and controlling the power should work together to assemble systems that work safely. The degree of hazard can be greatly reduced by proper design, construction, installation, maintenance, and operator training. While compliance with this standard does not assure a safe installation, cooperation of the system designers in conjunction with this standard should result in a safely operating system.

The importance of communication between manufacturer and user cannot be overemphasized. The chances for preventing hazardous incidents and limiting their consequences are greatly improved when both user and manufacturer are correctly and fully informed with respect to the intended use and all environmental and operating conditions.

7.2 Motion control system

The term “motion control system” as used throughout this standard denotes the motor or motors, controls, and feedback devices as interconnected components. The motion control system may consist of a number of enclosures and other parts, which may be assembled at the factory or installation site.

7.3 Construction

7.3.1 Rating and identification plates

A legible, durable nameplate shall be attached to each motion control system component and shall, as a minimum, include the following items:

a) motor nameplate (see 4.2.1 or 4.3.1 as appropriate);

b) control nameplate (see 5.4);

c) feedback device nameplate (see 6.1.1.13 or 6.2.3 as appropriate).

7.3.2 Operating and maintenance data

Instruction documents should be furnished and should include at least the following:

a) information necessary for calibrating components, devices, and subassemblies which are intended to be adjusted by the user;

b) information to allow for the proper selection of the input circuit equipment and protection when an electronic power converter is designed for use in different applications with a range of load ratings;

Copyright National Electrical Manufacturers Association
Provided by IHS under license with NEMA
No reproduction or networking permitted without license from IHS
Not for Resale

c) operating instructions, including all information necessary to operate the complete drive system;

d) maintenance instructions, including information for locating and replacing faulty components or subassemblies;

e) appropriate warning notices where safety considerations exist.

Documents should be of such a size and quality as to be clearly legible.

7.3.3 Supply circuit disconnecting devices

When disconnecting devices are supplied as part of the motion control system, they shall meet the requirements of ANSI/NFPA 70, Article 430, Part H.

7.3.4 Protection

7.3.4.1 Interrupting capacity

Devices that are intended to break short-circuit current shall have an interrupting capacity sufficient for the voltage used and for the current that must be interrupted when the control equipment or drive system is connected to a power supply having the capacity to apply maximum voltage and maximum available short-circuit current within the limits specified for the equipment.

7.3.4.2 Control circuit

The motor control circuit shall meet the pertinent requirements of ANSI/NFPA 70.

Copyright National Electrical Manufacturers Association
Provided by IHS under license with NEMA
No reproduction or networking permitted without license from IHS
Not for Resale

--`,,```,,,,````-`-`,,`,,`,`,,`---

Copyright National Electrical Manufacturers Association
Provided by IHS under license with NEMA
No reproduction or networking permitted without license from IHS
Not for Resale

Annex A
(informative)

Symbols and abbreviations

The following symbols and abbreviations pertain to rotating servo and stepping motors, their controls, and their systems. Where a symbol relates to a quantity, the corresponding SI (metric) and English units of that quantity are given.

Symbol/ abbreviation	Definition	Units	
		SI	**English**
a	linear acceleration	s^{-2}	rev/min^2
cw	clockwise rotation	—	—
ccw	counter-clockwise rotation	—	—
D	viscous damping factor	N-m-s/rad	lb-in-s/rad
E_g	internally generated voltage (back EMF)	V	V
FF	form factor	—	—
f	frequency	Hz	Hz
h	harmonic term	—	—
I	current	A	A
I_{CS}	continuous stall current	A	A
I_{pk}	peak current	A	A
I_{rms}	root mean square current	A	A
I_{sc}	short circuit current	A	A
J	moment of inertia	$kg\text{-}m^2$	$lb\text{-}in\text{-}s^2$
J_L	load moment of inertia	$kg\text{-}m^2$	$lb\text{-}in\text{-}s^2$
J_r	mass moment of inertia with respect to the rotational axis of the rotor	$kg\text{-}m^2$	$lb\text{-}in\text{-}s^2$
K_D	damping coefficient	N-m-s/rad	lb-in-s/rad
K_E	back EMF constant	V-s/rad	V-s/rad
K_M	motor constant	$N\text{-}m/W^{-1/2}$	$lb\text{-}in/W^{-1/2}$
K_T	torque constant	N-m/A	lb-in/A
	lead	—	—
L	inductance	H	H
L_a	armature inductance	H	H
L_{LS}	large signal inductance	H	H
m	mass	kg	slug
N	gear ratio	—	—
p	pitch	—	—
P_d	dissipated power	W	W
P_{in}	input power	W	W
P_{out}	output power	W	W
r	radius	mm	inch
R	resistance	Ω	Ω
R_a	armature resistance	Ω	Ω
R_b	brush resistance	Ω	Ω
R_{mt}	motor terminal resistance	Ω	Ω

Copyright National Electrical Manufacturers Association
Provided by IHS under license with NEMA
No reproduction or networking permitted without license from IHS
Not for Resale

Symbol/ abbreviation	Definition	Units	
		SI	English
R_{th}	thermal resistance	ºK/W	ºC/W
S, v	speed	s^{-1}	rev/min (rpm)
t	time	s	s
t_i	time interval	s	s
t_f	fall time	s	s
t_r	rise time	s	s
T	torque	N-m	lb-in
T_c	continuous torque	N-m	lb-in
T_i	torque per time interval	N-m	lb-in
T_a	accelerating torque	N-m	lb-in
T_{cs}	continuous stall torque	N-m	lb-in
T_D	damping torque	N-m	lb-in
T_f	internal friction torque	N-m	lb-in
T_L	load torque	N-m	lb-in
T_{pk}	peak torque	N-m	lb-in
T_{rms}	root mean square torque	N-m	lb-in
V	voltage	V	V
V_{pk}	peak voltage	V	V
V_{rms}	root mean square voltage	V	V
V_s	supply voltage	V	V
W	power	W	W
Z_{ro}	rotor impedance (measured with stator open circuit)	Ù	Ù
Z_{rs}	rotor impedance (measured with stator short circuit)	Ù	Ù
Z_{so}	stator impedance (measured with rotor open circuit)	Ù	Ù
Z_{ss}	stator impedance (measured with rotor short circuit)	Ù	Ù
a	angular acceleration	rad/s^2	rad/s^2
a_{max}	maximum theoretical acceleration from stall	rad/s^2	rad/s^2
h	efficiency	—	—
f	angular displacement	rad, °, rev	rad, °, rev
t	time constant	s	s
t_e	electrical time constant	s	s
t_m	mechanical time constant	s	s
t_{th}	thermal time constant	s	s
$è$	temperature	°C	°C
$ù$	angular velocity	rad/s	rad/s
°	angular degree	—	—

NOTE For stepping motors, units may be slightly different due to the magnitude of values.

--`,,`,,`-`-`,,`,,`,`,,`---

Copyright National Electrical Manufacturers Association
Provided by IHS under license with NEMA
No reproduction or networking permitted without license from IHS
Not for Resale

Selected conversion factors, English units to SI units:

MULTIPLY:	BY:	TO OBTAIN:
lb-in	0.113	N-m
lb-in/krpm	0.00955	lb-in-s/rad
lb-in/krpm	0.001079	N-m-s/rad
lb-in-s^2	0.113	Kg-m^2
lb-in-s/krpm	0.113	N-m-min/rad
slug	14.6	kg
inch	25.4	mm
krpm	104.7	rad/s

--`,,`,,`-`-`,,`,,`,`,,`---

Copyright National Electrical Manufacturers Association
Provided by IHS under license with NEMA
No reproduction or networking permitted without license from IHS
Not for Resale

--`,,`,,`-`-`,,`,,`,`,,`---

Copyright National Electrical Manufacturers Association
Provided by IHS under license with NEMA
No reproduction or networking permitted without license from IHS
Not for Resale

Annex B
(informative)

Index of defined terms

A	
absolute encoder	3.3.2.1
acceleration/deceleration <stepping motor control>	3.4.3.2
acceleration current	3.2.1.4.3
accuracy	3.3.1.1
accuracy ripple	3.3.3.1
ambient temperature	3.1.18.1
angular acceleration (*á*)	3.1.1.1
angular velocity (*ù*)	3.1.22.1
armature	3.2.2.1
armature inductance (L_a)	3.2.1.9.2
armature reaction	3.2.2.2
armature resistance (R_a)	3.2.2.3
axial end play <control motor>	3.2.1.7.1
axial end play <feedback device>	3.3.1.2
axial load	3.3.1.3
B	
back EMF (E_g)	3.2.1.6.1
base speed	3.4.3.3
bias torque	3.2.3.20.1
bi-directional	3.3.2.2
bi-level drive	3.4.3.4
binary-coded decimal (*BCD*)	3.3.1.4
bipolar	3.4.3.9.1
bit	3.3.1.5
breakaway torque <general>	3.1.20.1
breakaway torque <encoder>	3.3.2.21.2
brush	3.2.1.1
brushless d.c. motor	3.2.2.4
C	
case temperature	3.1.18.2
channel	3.3.1.6
chopper drive	3.4.3.5
closed loop control system	3.4.3.1.1
cogging	3.2.1.13.1
cogging torque	3.2.1.12.1
command pulse rate	3.4.3.6
commutation	3.2.1.2
commutation angle	3.2.1.3
commutator	3.2.2.5
complementary	3.3.1.7

Copyright National Electrical Manufacturers Association
Provided by IHS under license with NEMA
No reproduction or networking permitted without license from IHS
Not for Resale

constant current drive	3.4.3.7
continuous current (I_c)	3.2.1.4.1
continuous power output	3.4.1.1
continuous speed	3.2.1.13.3
continuous stall current (I_{CS})	3.2.1.4.2
continuous stall torque (T_{CS})	3.2.1.12.2
continuous torque	3.2.1.12.4
coulomb friction torque	3.1.20.2
count error	3.3.1.8
count transition	3.3.1.9
counter EMF	3.2.1.6.1
cycle error	3.3.1.10
cycle width	3.3.1.11
D	
damping coefficient (K_D)	3.2.1.5
deadband	3.4.2.2
demagnetization current	3.2.2.6
detent torque	3.2.3.20.2
dielectric strength	3.1.3
differential output	3.3.1.12
digital analyzing voltmeter (*DAV*)	3.3.3.2
digital tachometer	3.3.2.3
direction of rotation	3.1.4
direction sensing	3.3.1.13
dividing head	3.3.3.3
drift	3.4.1.2
drive circuits	3.4.3.8
driver	3.4.3.1.2
dual channel	3.3.2.4
duty cycle	3.1.5
dynamic braking	3.4.1.3
dynamic friction torque	3.2.2.19
dynamic load angle	3.2.3.1
E	
eddy current equivalent resistance	3.2.3.2
edge separation	3.3.1.14
edge-to-edge separation	3.3.1.14
efficiency	3.1.6
electrical time constant (t_e)	3.1.19.1
electrical degree (° electrical)	3.3.2.5
electrical error	3.3.3.4
electrical noise	3.1.7
electrical noise immunity	3.1.8
electromagnetic interference (*EMI*)	3.1.9
electromagnetic torque in a hybrid stepping motor	3.2.3.20.3
electronic slew speed	3.3.2.6
encoder	3.3.2.7

--`,,`,,`-`-`,,`,,`,`,,`---

Copyright National Electrical Manufacturers Association
Provided by IHS under license with NEMA
No reproduction or networking permitted without license from IHS
Not for Resale

excitation	3.3.1.15
F	
flutter	3.3.1.16
form factor (*FF*)	3.1.2.1
frameless resolver	3.3.3.5
frequency	3.3.2.8
frequency modulation	3.3.2.9
frequency response	3.3.1.17
full load operation	3.2.2.7
full load torque	3.2.1.12.4
full-step	3.2.3.14.1
G	
gap tolerance	3.3.1.18
gray code	3.3.1.19
H	
half-step	3.2.3.14.2
harmonic term	3.2.3.20.3.2
holding torque	3.2.3.20.4
horsepower	3.2.1.8
host control	3.4.2.1.1
housed resolver	3.3.3.6
hybrid (*HY*) stepping motor	3.2.3.16.1
hysteresis	3.3.1.20
hysteresis torque	3.2.3.20.5
I	
incremental encoder	3.3.2.10
incremental line count	3.3.2.11
index	3.3.1.21
indexer	3.4.3.1.7
inductance	3.2.1.9.1
input impedance	3.1.10
interface	3.4.3.1.3
J	
jitter	3.3.2.12
K	
L	
large signal inductance (L_{LS})	3.2.3.3
lead ( )	3.1.11
line driver	3.3.2.13
linear acceleration (*a*)	3.1.1.2
linear velocity (*v*)	3.1.22.2
linearity	3.4.2.3

--`,,`,,`-`-`,,`,,`,`,,`---

Copyright National Electrical Manufacturers Association
Provided by IHS under license with NEMA
No reproduction or networking permitted without license from IHS
Not for Resale

locked rotor	3.2.1.10
L/R drive	3.4.3.15
M	
maximum acceleration	3.3.1.22
maximum allowable winding temperature	3.1.18.3
maximum axial load	3.3.1.23
maximum continuous current	3.2.2.8
maximum continuous torque	3.2.2.9
maximum radial load	3.3.1.35
maximum reversing command pulse rate	3.4.3.10
maximum slew pulse rate	3.2.3.12.1
maximum speed	3.1.22.3
maximum step rate	3.2.3.15.1
maximum theoretical acceleration	3.2.2.10
mechanical hysteresis	3.2.3.4
mechanical slew speed	3.3.2.14
mechanical time constant (t_m)	3.1.19.2
micro-step	3.2.3.14.3
moment of inertia	3.1.12
motion control system	3.1.13
motor constant (K_M)	3.2.2.11
motor phase	3.2.3.5
motor terminal resistance (R_{mt})	3.2.1.11
mounting surface perpendicularity	3.3.1.24
multiplication	3.3.1.25
multi-speed resolver	3.3.3.8
multi-turn resolver	3.3.3.9
N	
natural binary code	3.3.1.26
no load speed	3.2.1.13.2
no-load current	3.2.2.12
null voltage	3.3.3.10
O	
open collector	3.3.2.15
open loop control system	3.4.3.1.4
output torque	3.2.1.12.4
overshoot	3.2.3.6
P	
peak current	3.2.1.4.3
peak torque (T_{pk})	3.2.1.12.3
permanent magnet (*PM*) stepping motor	3.2.3.16.2
phase	3.3.2.16
phase error	3.3.1.27
phase resistance	3.2.3.7
phase shift	3.3.3.11

Copyright National Electrical Manufacturers Association
Provided by IHS under license with NEMA
No reproduction or networking permitted without license from IHS
Not for Resale

pitch	3.1.14
pole pair	3.3.3.12
position accuracy	3.3.1.28
position error	3.3.1.29
position loop bandwidth	3.4.2.4
positional error	3.2.3.8
power amplifier	3.4.2.1.2
power amplifier duty cycle rating	3.2.2.13
power dissipation	3.1.15
power source	3.4.2.1.3
primary windings	3.3.3.13
pull-in step rate	3.2.3.15.2
pull-in torque	3.2.3.20.4
pull-out step rate	3.2.3.15.3
pull-out torque	3.2.3.20.5
pulse	3.3.2.17
pulse stream control	3.4.3.11
pulse width error	3.3.1.30
pulse width frequency modulated amplifier	3.4.1.4
pulse width modulated amplifier	3.4.1.5
Q	
quadrature	3.3.1.31
quadrature error	3.3.1.32
R	
radial end play	3.2.1.7.2
radial load	3.3.1.33
radial misalignment tolerance	3.3.1.34
radio frequency interference (*RFI*)	3.4.1.6
ramping	3.4.3.12
rated current	3.2.1.4.4
rated speed	3.2.1.13.3
rated torque	3.2.1.12.4
regeneration	3.4.2.5
regenerative capacity	3.4.2.6
repeatability	3.3.1.36
resolution	3.3.2.18
resolver	3.3.3.14
resolver accuracy	3.3.3.4
resolver bridge	3.3.3.15
resonance controller	3.4.3.1.5
resonant step rate	3.2.3.15.4
response range	3.4.3.13
ripple current	3.4.1.7
rms (root mean square) current	3.1.2.2
rms (root mean square) torque (T_{rms})	3.1.20.3
rotary pulse generator (*RPG*)	3.3.2.10
rotation <stepping motor control>	3.4.3.14
rotor	3.1.17
running torque	3.3.2.21.1

Copyright National Electrical Manufacturers Association
Provided by IHS under license with NEMA
No reproduction or networking permitted without license from IHS
Not for Resale

S	
safe operating area	3.2.2.14
saturation term (N_c)	3.2.3.20.3.1
scale factor of the amplifier	3.4.2.7
secondary side	3.3.3.16
secondary windings	3.3.3.16
series resistance drive	3.4.3.15
servo mechanism	3.2.2.15
servo motor	3.4.2.1.4
servo motor motion controller	3.4.2.1.5
settling time	3.2.3.10
shaft runout	3.3.1.37
single channel	3.3.2.19
single-speed resolver	3.3.3.17
single step response	3.2.3.11
single step time	3.2.3.12
six-step brushless motor amplifier	3.4.2.8
slewing	3.4.2.9
slip	3.2.2.16
small signal bandwidth	3.4.2.10
stalled motor	3.2.1.10
starting torque <encoder>	3.3.2.21.2
state width error	3.3.1.38
static load angle	3.2.3.13
step angle error	3.2.3.14.4
step position	3.2.3.14.5
step response	3.4.1.8
step sequence	3.2.3.14.6
stepping motor	3.2.3.16.3
stepping motor controller	3.4.3.1.6
stepping rate	3.2.3.15.5
steps per revolution	3.2.3.17
stiffness <mechanical system>	3.1.20.4
stiffness <stepping motor>	3.2.3.20.6
switching frequency	3.4.1.9
symmetry	3.3.2.20
synchronism	3.2.3.18
T	
temperature coefficient of torque	3.2.2.17
temperature rise	3.1.18.4
thermal resistance (R_{th})	3.1.16
thermal time constant (t_{th})	3.1.19.3
three-phase sinusoidal brushless motor amplifier	3.4.2.11
torque constant (K_T)	3.2.1.12.5
torque ripple	3.1.20.5
torsional resonance	3.1.21
TIR (total indicator reading, total indicated runout)	3.3.1.37
transient	3.2.3.4
translator	3.4.3.1.8

Copyright National Electrical Manufacturers Association
Provided by IHS under license with NEMA
No reproduction or networking permitted without license from IHS
Not for Resale

transformation ratio	3.3.3.18
TTL compatible	3.3.2.22
U	
unipolar	3.4.3.9.2
V	
variable reluctance (*VR*) stepping motor	3.2.3.16.4
velocity loop bandwidth	3.4.2.12
velocity modulation	3.2.3.21
viscous damping at infinite impedance source (*D*)	3.2.2.18
viscous torque	3.2.2.19
voltage constant	3.2.1.6.2
W	
X	
Y	
Z	
Z_{ro} impedance	3.3.3.7.1
Z_{rs} impedance	3.3.3.7.2
Z_{so} impedance	3.3.3.7.3
Z_{ss} impedance	3.3.3.7.4
zero source impedance of a motor	3.2.1.5

Copyright National Electrical Manufacturers Association
Provided by IHS under license with NEMA
No reproduction or networking permitted without license from IHS
Not for Resale

Copyright National Electrical Manufacturers Association
Provided by IHS under license with NEMA
No reproduction or networking permitted without license from IHS
Not for Resale