HE 3-83 6470247 0001263 5
R-27-06

STANDARDS PUBLICATION / NO. HE 3-1983

nema

Infrared Application Manual

NEMA

NATIONAL ELECTRICAL MANUFACTURERS ASSOCIATION ■ 2101 L STREET, N.W., WASHINGTON, D.C. 20037

Copyright National Electrical Manufacturers Association
Provided by IHS under license with NEMA
No reproduction or networking permitted without license from IHS
Not for Resale

TABLE OF CONTENTS

		Page
	FOREWORD	i
	SCOPE	i
Section 1	HEAT TRANSFER METHODS	
	Methods	1
Section 2	INFRARED RADIANT ENERGY	2
Section 3	INFRARED HEATERS	
	What Infrared Heaters Do	4
Section 4	INFRARED HEATER COMPONENTS	
	Heat Sources	5
	Reflectors	6
Section 5	INFRARED SYSTEMS COMPONENTS	
	Infrared Fixtures	7
	Controls	7
Section 6	FACTORS DETERMINING THE EFFECTIVENESS OF INFRARED HEATERS	
	Beam Patterns	8
	Absorptivity	8
	Wind or Draft Effects	8
	System Efficiency	8
	Humidity	8
	Mean Radiant Temperature (MRT) Effect	8
Section 7	APPLICATION OF INFRARED HEATERS	
	General Guidelines	10
	Total Area Heating	10
	Spot Heating	10
Appendix A-1	PROCEDURES FOR CHECKING BEAM PATTERNS	
	Equipment Required	11
	Procedure	11
	Appendix A-2	12
	Appendix A-3	13
	Appendix B	14

© 1984 by the National Electrical Manufacturers Association

Copyright National Electrical Manufacturers Association
Provided by IHS under license with NEMA
No reproduction or networking permitted without license from IHS
Not for Resale

Foreword

This manual is the third edition of NEMA Standards Publication HE 3, first issued in 1971 and updated in 1976. It reflects much of the current technology involved in infrared heating for improvement of comfort level, and its purpose is to help potential users determine how infrared electric heating can be a viable method of meeting their space conditioning needs. As NEMA Authorized Engineering Information, HE 3-1983 addresses the infrared heater both as a unit and as part of an overall system involving other factors affecting comfort level such as draft and humidity. The various applications of infrared heaters are described as well.

In preparing this manual, every effort has been made to present an objective overview of how and why infrared electric heat is an effective comfort conditioning option for industrial, commercial, and other applications.

This publication is periodically reviewed by the Electric Environmental Equipment Section of NEMA for any revisions necessary to keep it up to date with advancing technology. Proposed or recommended revisions should be submitted to:

Manager, Engineering Department
National Electrical Manufacturers Association
2101 L Street, N.W.
Washington, D.C. 20037

Scope

This manual addresses the general design and use of infrared electric heating systems currently manufactured in the United States.

Copyright National Electrical Manufacturers Association
Provided by IHS under license with NEMA
No reproduction or networking permitted without license from IHS
Not for Resale

INFRARED APPLICATION MANUAL

(Authorized Engineering Information 11-3-1983.)

Section 1
HEAT TRANSFER METHODS

1.1 METHODS

Heat transfer can be accomplished by one of three methods.

1.1.1 Conductive Heat Transfer

Conductive heat transfer involves physical contact with the source of heat such as a hot water bottle against the body.

1.1.2 Convective Heat Transfer

Convective heat transfer involves warming the air to create a desired comfort level around people. Heated air is circulated either naturally or by fans and blowers to heat a normally enclosed area. Home heating with a forced-air furnace is an example of forced convection heat. Heating with electric baseboard units is an example of dependence upon natural convection.

1.1.3 Radiant Heat Transfer

Radiant heat transfer is the warmth felt on a cold morning when standing by a sunny window or on a cold night when standing by a fire. The warmth is felt even though the air is cold.

Copyright National Electrical Manufacturers Association
Provided by IHS under license with NEMA
No reproduction or networking permitted without license from IHS
Not for Resale

Section 2
INFRARED RADIANT ENERGY

Infrared radiant energy is defined as electromagnetic energy with wavelengths between 0.75 and 1000 microns. The usable range for heating purposes is 0.75 to 9.3 microns. These wavelengths are shorter than radio waves, longer than visible light energy, and contain no ultraviolet (sun tanning) rays or x-rays. The primary factor determining wavelengths of radiant energy from an electric infrared source is its surface temperature. The higher the temperature, the shorter the wavelengths. Figure 2-1 relates infrared to the energy spectrum of the sun.

Copyright National Electrical Manufacturers Association
Provided by IHS under license with NEMA
No reproduction or networking permitted without license from IHS
Not for Resale

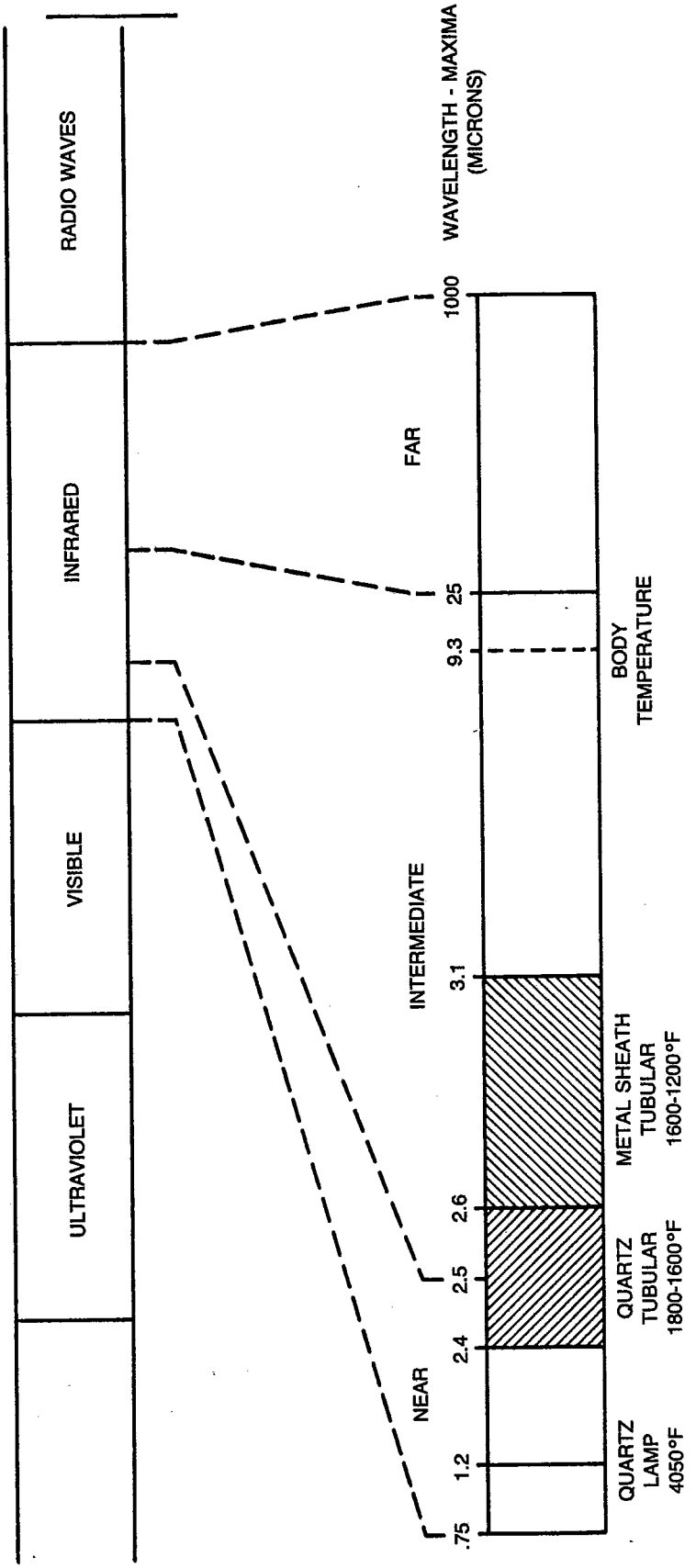

Figure 2-1
ENERGY SPECTRUM OF THE SUN

Copyright National Electrical Manufacturers Association
Provided by IHS under license with NEMA
No reproduction or networking permitted without license from IHS

Not for Resale

Section 3
INFRARED HEATERS

3.1 WHAT INFRARED HEATERS DO

Infrared heaters that are applied to improve comfort normally accomplish three results, the degree of accomplishment varying widely with the circumstances of the application:

1. *They radiate the subject,* replacing heat loss with radiant heat gain. In this way, losses can be overcome.
2. *They radiate the surroundings* (floors, machinery, materials, and objects), thus raising the mean radiant temperature* (MRT) of the environment to which the subject is exposed.
3. *They increase the ambient air temperature* to which the subjects are exposed. The ambient temperature is raised by convection from the warmed surroundings, by convection from the infrared fixture, and to a minor extent by the absorption of infrared energy by dust, water vapor, and carbon dioxide in the air.

Depending on the application, the relative importance of these three effects varies. For "spot heating" applications, the increase in ambient temperature is minimal; for outdoor applications, it is practically nonexistent. In "area heating" applications (especially in well-insulated buildings), the increase in ambient air temperature becomes significant.

Infrared energy that misses the subject is not wasted. It raises the temperature of the surroundings, thus increasing the MRT effect. Raising the MRT reduces the heat loss of the subject to the surroundings. The nearer the heated surroundings are to the subject, the more important this secondary effect becomes in making the subject feel more comfortable.

---

* *Mean radiant temperature*: That temperature of a uniform black enclosure in which an object would exchange the same amount of radiant heat as in an existing nonuniform environment. See also 6.6.

Copyright National Electrical Manufacturers Association
Provided by IHS under license with NEMA
No reproduction or networking permitted without license from IHS
Not for Resale

Section 4
INFRARED HEATER COMPONENTS

There are two major components of infrared heaters, the heat source and the reflector. Both contribute toward the overall energy utilization of the heater, but neither is the single criterion upon which heaters should be compared. The more important of these are discussed below.

4.1 HEAT SOURCES

One of the factors involved in the overall energy utilization of the system is the heat source. The important factor in the heat source is the radiant energy emission efficiency. The radiant energy emission efficiency is the ratio of the radiant output of the heat source to the total energy input. The temperature of the heat source has a dominant influence on this factor; but the use, configuration, absorptivity of the subject, and environmental conditions must be considered. There are four basic types of electric infrared heat sources. They are quartz lamps, metal sheath elements, reflector lamps, and quartz tubular elements.

4.1.1 Quartz Lamps

Quartz lamps are a tungsten filament infrared heat source that radiate energy at short wavelengths. The band of energy peaks at approximately 1.0 micron and includes approximately 7 lumens per watt of visible light.

The quartz lamp has a coiled tungsten filament that is positioned inside a quartz sheath which is filled with an inert gas (usually Argon) and sealed. The normal filament temperature is 4050°F (2230°C). The tungsten filament radiates at 80 percent of its capacity in less than one second after being energized. Since most of the energy for tungsten filament heat sources is of short wavelengths, it readily passes through the quartz sheath (enclosure). The quartz sheath operates at temperatures from 500°–1200°F (260°–650°C), and as such does not serve as the primary radiating surface. The quartz sheath is available in both translucent and clear grade and has good resistance to thermal shock. It is also capable of withstanding some mechanical shock, but care should be used in handling. Typically, these elements have a life expectancy of 5000 hours. Because the filament is tungsten, substantial electrical in-rush occurs when energized, and care must be taken in sizing the controls.

Quartz lamps can be designed for both horizontal and vertical operation with various types of end terminations to satisfy a wide variety of requirements. Care should be taken in handling quartz lamps because fingerprints or other contaminants can cause devitrification.[1]

4.1.2 Metal Sheath Elements

Metal sheath elements are typically designed to operate at temperatures between 1200°F (650°C) and 1600°F (870°C) which corresponds to maximum wavelengths of about 3.1 microns and 2.6 microns respectively. This places metal sheath elements in the intermediate spectrum of infrared sources. These elements consist of a corrosion resistant metal sheath containing an insulating material, typically magnesium oxide, which surrounds an electrical resistance material, typically nichrome wire. Heat from the wire is conducted through the insulation to the tubular metal sheath, heating it to the temperature range which results in infrared emission.

Response time (heat-up) is typically three minutes with very little luminosity (dull-red). Metal sheath elements have excellent thermal shock and mechanical vibration resistance and can be mounted in any position. Typically, they have a life expectancy of 5,000 hours. Because the metal sheath is the radiating source, when exposed directly to wind, the sheath temperature is decreased. Shielding the elements will reduce temperature loss.

Metal sheath elements can be obtained in a variety of configurations to suit the application. Because of their slower warm-up and cool-down time, they are ideally suited to a wide variety of cycling control devices which can use their innate thermal inertia to achieve the average heating effects desired. Metal sheath elements use nickel-chromium coils and do not experience the high in-rush currents of tungsten filaments, therefore, the controls should be rated for resistive load.

4.1.3 Reflector Lamps

Reflector lamps operate in the near infrared spectrum and are similar in operation to quartz lamps. The tungsten filament operates at 4050°F (2230°C) and radiates energy in the same wavelengths as quartz lamps.

[1] Devitrification is a process whereby the lamp's glassy components become opaque, hard, or crystalline; thereby affecting the performance characteristics of the unit and possibly reducing normal life expectancy.

Copyright National Electrical Manufacturers Association
Provided by IHS under license with NEMA
No reproduction or networking permitted without license from IHS
Not for Resale

The enclosure is made of heat resistant glass with a built-in reflector. The temperature of the glass is approximately 500°F (260°C) when energized at design voltages. These lamps are generally used for spot heating. Typically these elements have a life expectancy of 5,000 hours. These units use tungsten filaments and care must be taken in sizing the controls. Reflector lamps are capable of withstanding some mechanical shock, but care should be used in handling.

4.1.4 Quartz Tubular Elements

Quartz tubular elements are similar in appearance to certain types of quartz lamps in that they both use quartz tubes as an envelope to contain the helically coiled resistance wire, but quartz tubular elements are open to the atmosphere. Commonly used as resistance wire in quartz tubular elements is iron-chromium-aluminum alloy or nickel-chromium alloy. Oxygen enters the tube and forms a protective oxide coating on the resistance wire.

Quartz tubular elements are typically designed to operate between 1600°F (870°C) and 1800°F (980°C) and, at that temperature, the radiated wavelengths are in the "near" and "intermediate" infrared portions of the electromagnetic spectrum, between 2.6 and 2.4 microns.

Clear and translucent fused quartz provides one of the highest infrared transmission capabilities in the "near" and "intermediate" range of any material available for use as a sheath. It has a good resistance to thermal shock and is also capable of withstanding some mechanical shock, but care should be used in handling. Fingerprints or other contaminants can cause devitrification.[1]

Quartz tubular elements radiate at 80 percent of their capacity in about one minute. Cool-down rate is also rapid for quartz tubular elements.

For nonhorizontal operation, quartz tubular elements must be designed to prevent the heating wire from settling or sagging toward the lower end.

4.2 REFLECTORS

The second component involved in overall energy utilization is the reflector. In an infrared heater, reflectors are used to direct and concentrate the radiant energy from the source to the work area. The higher the efficiency of the reflector, the more radiant energy will be transferred.

Reflector efficiency is primarily influenced by the reflector material, its shape, and its surface condition. Reflector surfaces must be kept clean to maintain their original efficiency. Several materials can be used as reflectors such as porcelainized steel with a fired gold surface, anodized or processed aluminum, polished aluminum, and stainless steel. The most widely used reflector material is aluminum.

[1] Devitrification is a process whereby the lamp's glassy components become opaque, hard, or crystalline; thereby affecting the performance characteristics of the unit and possibly reducing normal life expectancy.

Copyright National Electrical Manufacturers Association
Provided by IHS under license with NEMA
No reproduction or networking permitted without license from IHS
Not for Resale

Section 5
INFRARED SYSTEMS COMPONENTS

An infrared system is made up of one or more infrared fixtures and controls.

5.1 INFRARED FIXTURES

The fixture provides a mounting for the heating element(s) and reflector, and a compartment for making electrical connections. In addition, the fixture enables mounting of the entire unit. Fixtures often include a heat shield to protect the electrical wiring and element terminations from direct exposure to the radiant heat. They may also include insulating material or ventilation openings, or both, to reduce the temperature in the wiring compartments.

5.2 CONTROLS

The simplest control for infrared heating is a manual ON/OFF switch.

In some applications, ambient temperature sensing thermostats are used to turn the heaters ON when the ambient temperature falls below some preselected value and to turn them OFF when this temperature rises again. Because the infrared heaters will heat subjects in the space more quickly than the air, this method will usually result in overheating when the heaters are ON. This can be compensated for, to some extent, by setting the thermostat for a lower ambient temperature, but then the subjects may get too cool before the thermostat again calls for heat. When using ambient temperature sensing thermostats, care must be taken to locate the thermostat outside the beam pattern of the heaters; otherwise the thermostat will respond to the radiant heat and turn off the heaters too soon.

Another control commonly used is a percentage timer, which can be set to connect power to the heaters for a preselected portion of a fixed time base. The time base selected should be less than the cool-down time for the heater, so that some radiant heat will be noticeable at all times. When more heat is required to maintain comfort, the timer is set for a higher percentage. At 100 percent setting, the heaters are ON continuously and thus are supplying the maximum available heat. When the space temperature becomes uncomfortably warm, the timer can be set for a lower percent ON time, thus reducing the average heating effect. This control does not respond to changes in space temperature and must therefore be manually adjusted when the heating needs change.

For more sophisticated control systems, some manufacturers provide an electronic sensor, which responds to the MRT in the heated space, in much the same manner as a person responds. These sensors can be used to control time-based or voltage-based controllers to vary either the percent ON time, or the average voltage supplied to the heaters, thus reducing the heating capacity when less heat is required.

When several infrared elements are installed in a common area, it is sometimes desirable to stage them with a multiple step controller so that the number of elements energized can be varied as the heat requirements in the space vary. This technique is most effective when the elements are arranged in an overlapping pattern so that the subject still receives some heat, even when some of the elements are not energized.

Copyright National Electrical Manufacturers Association
Provided by IHS under license with NEMA
No reproduction or networking permitted without license from IHS
Not for Resale

Section 6
FACTORS DETERMINING THE EFFECTIVENESS OF INFRARED HEATERS

6.1 BEAM PATTERNS

Beam patterns are determined by the position of the heat source in relation to the reflector cavity and by the shape of the reflector. The beam pattern is that area that contains 90 percent of the energy received on a surface at a distance of five feet. (See Appendix A for information on beam pattern test procedures.)

6.2 ABSORPTIVITY

Absorptivity is the ratio of the energy absorbed to that intercepted. This ratio is a measure of the efficiency with which the subject receives infrared energy.

6.3 WIND OR DRAFT EFFECTS

Whenever possible, wind and drafts should be minimized by the use of wind screens or by the placement of equipment or furniture.

Studies have been made of the effect of wind or drafts on cooling human skin. Appendix B is a chart of wind chill effects showing, for example, that a temperature of 30°F (−1°C) and a wind of 15 mph cools exposed flesh at the same rate as a temperature of 9°F (−13°C) with no wind.

Where the wind or draft effect cannot be eliminated, consideration must be given to wind chill temperature in determining the design temperature.

6.4 SYSTEM EFFICIENCY

The efficiency of emitting the infrared energy generated from the fixture is the fixture efficiency, or the ratio of the radiant energy emitted to the total energy generated by the element. The fixture efficiency is nominally 75 percent. The housing, the reflector, and other parts of the fixture absorb a portion of the infrared energy produced by the element and convert it to heat by convection. The remainder of the energy generated is the net radiant output of the fixture. The greater the control of the radiant pattern by the reflector, the greater the fixture efficiency. The infrared outside of the concentrated beam is referred to as spill. A representation of system efficiency is shown in Figure 6-1.

6.5 HUMIDITY

While humidity is a major factor in determining comfort, it is usually not considered in designing the electric infrared heating system. Infrared energy does not increase or decrease moisture content.

6.6 MEAN RADIANT TEMPERATURE (MRT) EFFECT

The MRT can be characterized as the average temperature of the objects surrounding a person. Effectiveness of infrared is determined primarily by the amount of energy actually absorbed and, secondarily by the influence of the system in raising the MRT and ambient air temperatures to which a person is exposed.

Objects and people are in a state of constant energy interchange with the surroundings. If energy is lost faster than the body can generate it, discomfort results. Energy can be lost by conduction to a chair, by convective air currents surrounding the body, and by direct radiant interchange with nearby objects. This radiant interchange is an important consideration and is described by the concept of MRT.

By directing infrared not only on a person but also on objects which surround the person, the MRT is increased and thus the comfort level is raised.

Copyright National Electrical Manufacturers Association
Provided by IHS under license with NEMA
No reproduction or networking permitted without license from IHS
Not for Resale

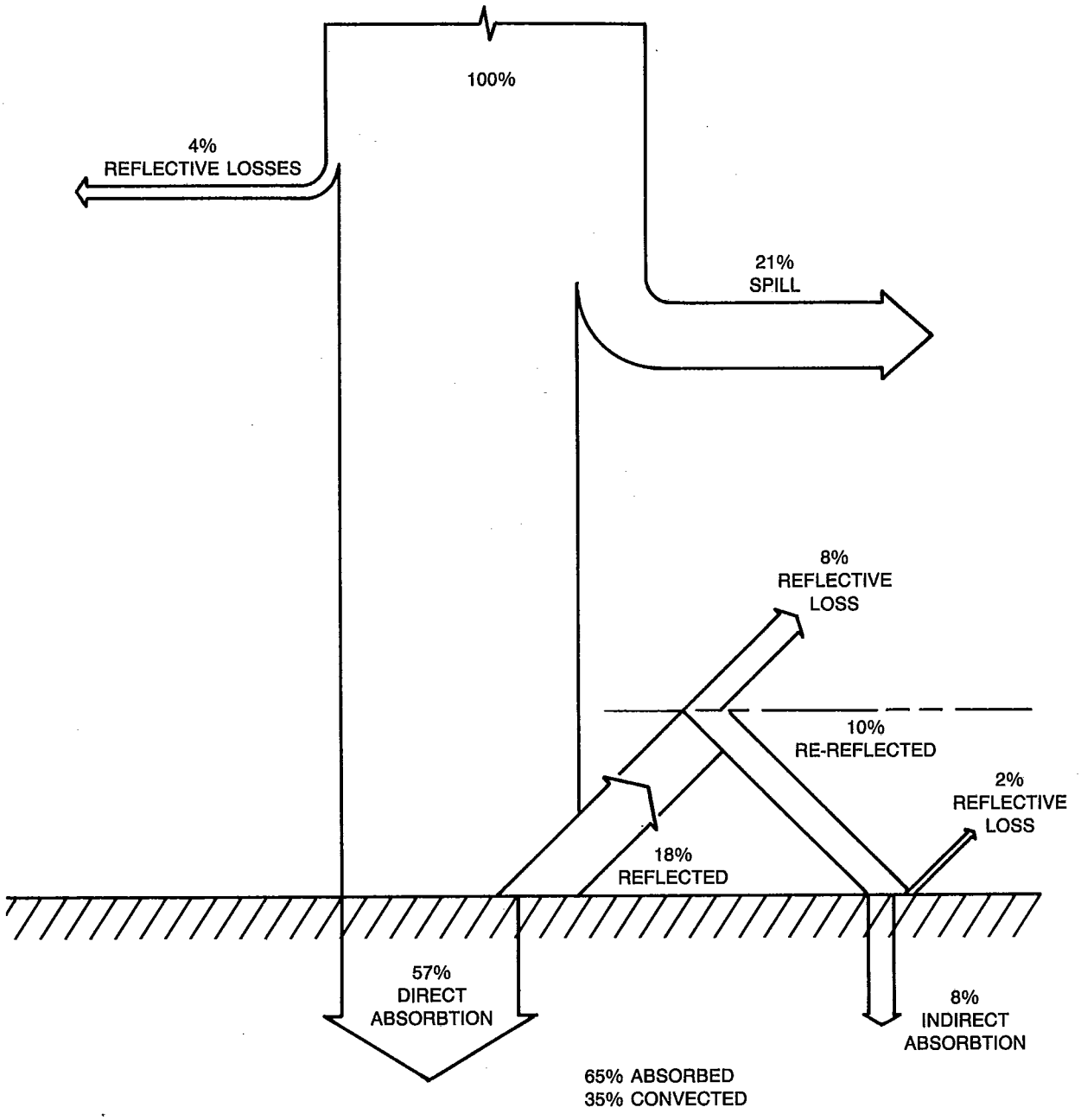

Figure 6-1
TYPICAL DISTRIBUTION OF RADIANT VS CONVECTION

Copyright National Electrical Manufacturers Association
Provided by IHS under license with NEMA
No reproduction or networking permitted without license from IHS
Not for Resale

Section 7
APPLICATION OF INFRARED HEATERS

7.1 GENERAL GUIDELINES

The use of fixtures with distribution characteristics or patterns that fit the area to be heated results in effective infrared levels. Use of fixtures with patterns that do not fit the application may result in levels significantly different than desired.

Care must be taken to minimize air movement around the subject, since air movement cools the subject reducing the apparent effectiveness of the infrared heating system. If the feeling of coolness is to be overcome, the subject requires additional infrared heat to counteract this convective loss.

Some general guidelines are listed below.:

1. Concentrate the infrared in areas where people are located, but allow a pattern large enough to warm surrounding objects.
2. Minimize air movement around people.
3. Locate people away from cold uninsulated walls or windows.
4. Avoid placing objects between people and the infrared heater.
5. Beam patterns should always overlap approximately 5 feet above floor level to provide even heat.
6. Infrared heaters should be arranged so as to heat the subject from two sides.
7. Fixtures should be mounted so that the long dimension of the heat pattern is parallel to the long dimensions of the area to be heated.
8. For comfort, do not mount fixtures at a height of less than eight feet.

7.2 TOTAL AREA HEATING

Because infrared heat is transferred almost entirely by radiation, the quantity of heat received depends on surface conditions, the area exposed, and the distance to the heat source. A person is comfortable when enough heat is received to balance the heat lost to the surroundings. This heat loss may be conductive (i.e. cold floors), convective (i.e. cold drafts), or radiant (i.e. cold walls) and is usually a combination of all three.

To determine the amount of infrared heat required to heat a total area, calculate the conventional heat loss per NEMA Standard HE 1-1980.[1] This total heat loss is then multiplied by .85 to obtain the installed infrared heating capability.[2]

For additional information on the calculation of structure heat loss, refer to the ASHRAE *Handbook of Fundamentals*–1977, Chapter 8 (available from ASHRAE at the address in the footnote below).

7.3 SPOT HEATING

Spot heating will maintain a desired comfort level within an isolated area. Ambient temperature must be considered when determining the energy input. The ambient temperature will not itself be affected.

The energy to maintain a satisfactory comfort level should be sufficient to balance normal body heat losses, and will depend on ambient conditions, dress, and activity.

To calculate the installed watts of infrared heat required for spot heating application, use the following equation:

$$K \times \text{Area } (ft^2) \times T\ (^\circ F) = \text{WATTS}$$

$K = 1$ w/ft^2 – °F Indoors

$K = 2$ w/ft^2 – °F Drafty Indoors

$K = 2$ to 3 w/ft^2 – °F Outdoors

Where T = Desired temperature rise
(comfort temp–design temp)

[1] NEMA Standards Publication No. HE 1-1980, *Manual for Calculating Heat Loss and Heat Gain for Electric Comfort Conditioning,* available from the NEMA Sales Office, 2101 L Street, N.W., Washington, DC 20037.

Jansen, J. E., *Field Evaluation of High Temperature Infrared Space Heating Systems,* ASHRAE Research Project #98, available from the American Society of Heating, Refrigerating, and Air-Conditioning Engineers, Inc., 1791 Tullie Circle, N.E., Atlanta, GA 30329

[2] Bailey, Herbert R., *An Experimental Comparison of Energy Requirements for Space Heating with Radiant and Convective Systems,* ASHRAE Research Project #177B, available from ASHRAE at the above address.

Copyright National Electrical Manufacturers Association
Provided by IHS under license with NEMA
No reproduction or networking permitted without license from IHS
Not for Resale

Appendix A-1
PROCEDURES FOR CHECKING BEAM PATTERNS

The following procedure may be used to obtain test data for use in analyzing energy beam patterns of electric radiant heaters. Radiant heater models by several manufacturers have been tested using this procedure.

A.1 EQUIPMENT REQUIRED

1. Reflectors to be checked or tested.
2. High intensity quartz lamps suitable for mounting in the above reflectors.
3. Light meter which registers light intensity in footcandles.
4. Large sheet tan packaging cardboard.
5. Variable voltage transformer.

A.2 PROCEDURE

1. Place cardboard under reflectors at target surface and place light meter on cardboard.
2. Mount lamps in reflector and adjust height such that centerline of lamps is 60 inches above the face of the light meter (target). NOTE: Reflectors must be mounted level and square with plane of target. Initial target location must be centered below the mid-point of the longitudinal axis of the lamps. (See Appendix A-2.)
3. Exclude room lighting to a level that is insufficient to affect light meter readings.
4. Record room ambient temperature (75°F ± 1°F used in this test).
5. Energize lamps, adjust voltage (variable voltage transformer) to produce exactly 1600 watts, and record initial reading on light meter.
6. After observing light intensity at initial target location, obtain light intensity at other locations perpendicular to the axis of the lamp as shown in Appendix A-3 (6-inch increment spacing between subsequent readings may be used in this test).

Copyright National Electrical Manufacturers Association
Provided by IHS under license with NEMA
No reproduction or networking permitted without license from IHS
Not for Resale

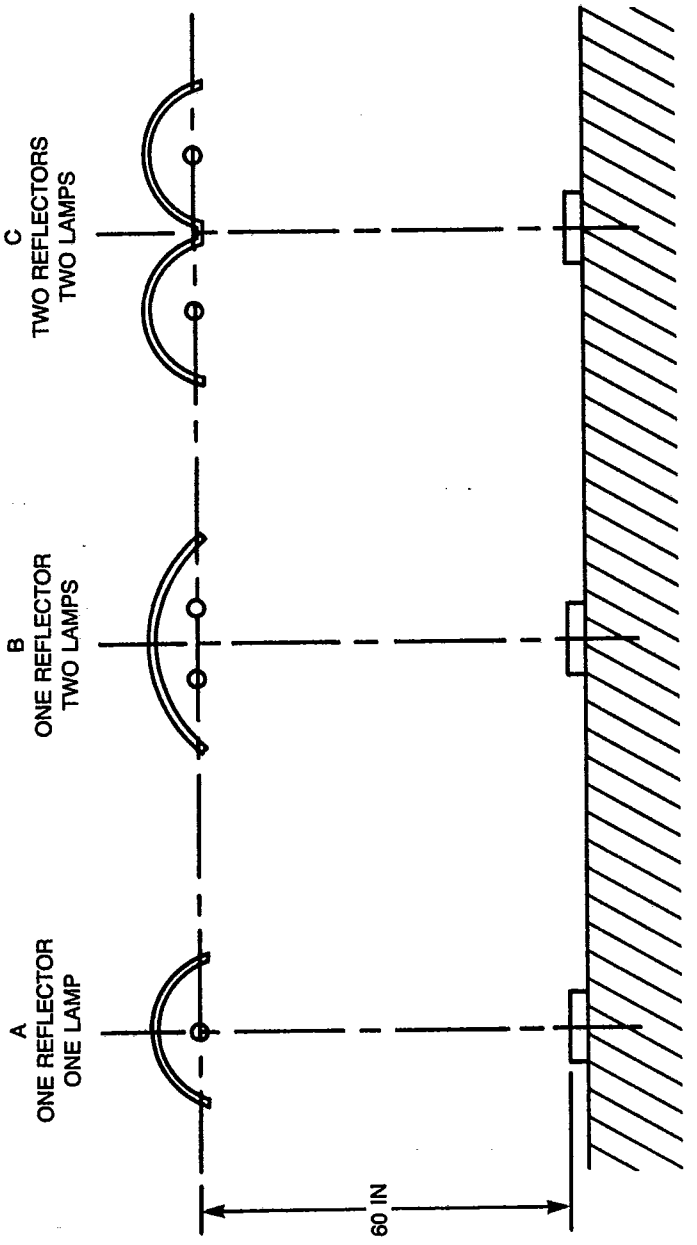

Appendix A-2

Copyright National Electrical Manufacturers Association
Provided by IHS under license with NEMA
No reproduction or networking permitted without license from IHS
Not for Resale

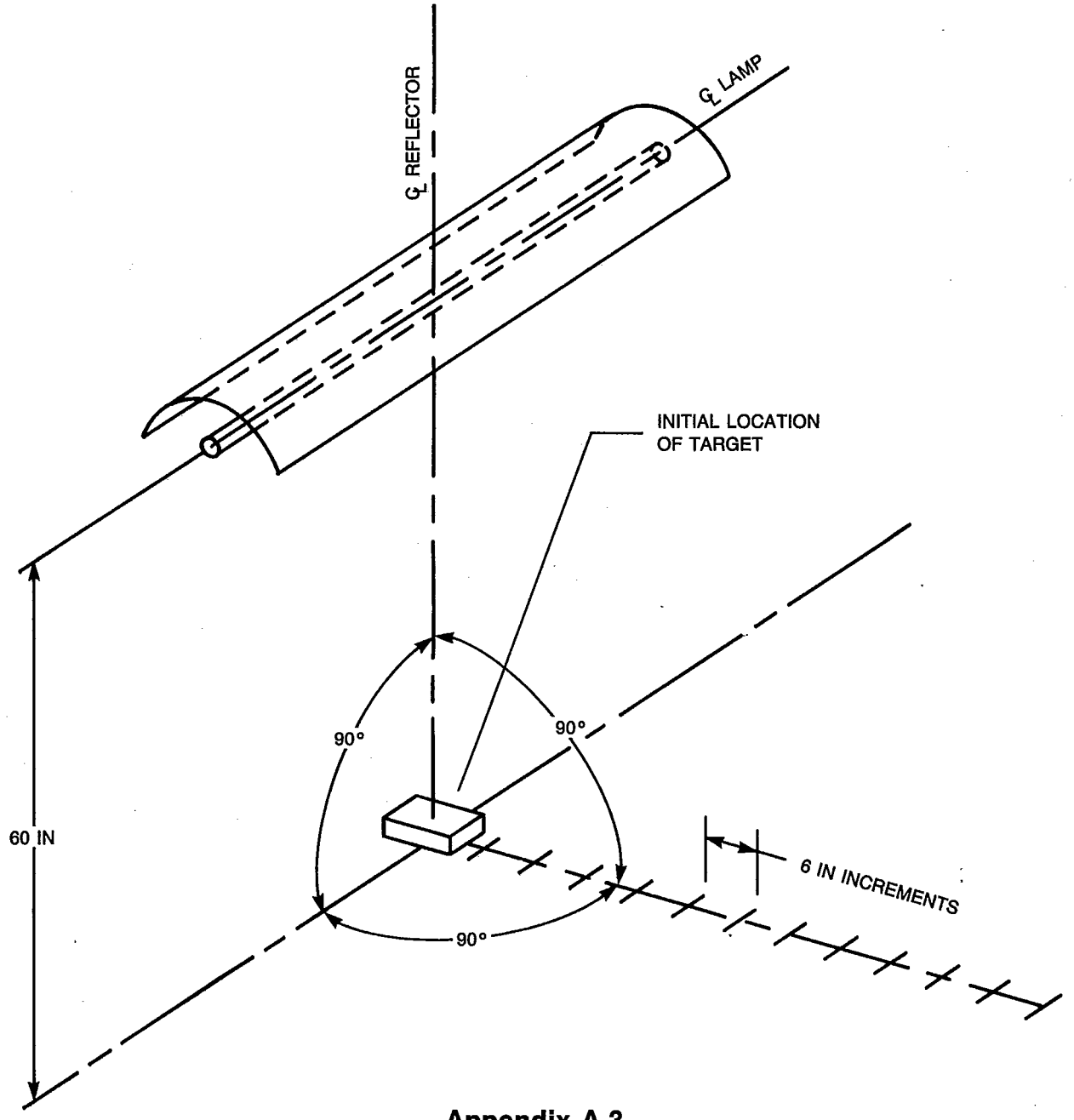

Appendix A-3

Copyright National Electrical Manufacturers Association
Provided by IHS under license with NEMA
No reproduction or networking permitted without license from IHS
Not for Resale

WIND SPEED (Miles per hour)	TEMPERATURE (°F)																
Calm	35	30	25	20	15	10	5	0	−5	−10	−15	−20	−25	−30	−35	−40	−45
5	32	27	22	16	11	6	0	−5	−10	−15	−21	−25	−31	−36	−42	−47	−52
10	22	16	10	3	−3	−9	−15	−22	−27	−34	−40	−46	−52	−58	−64	−71	−77
15	16	9	2	−5	−11	−18	−25	−31	−38	−45	−51	−52	−53	−65	−72	−75	−85
20	12	4	−3	−10	−17	−24	−31	−39	−46	−53	−60	−67	−74	−81	−86	−95	−103
25	8	1	−7	−15	−22	−29	−36	−44	−51	−59	−66	−74	−81	−88	−96	−103	−110
30	6	−2	−10	−18	−25	−33	−41	−49	−56	−64	−71	−79	−86	−93	−101	−109	−116
35	4	−4	−12	−20	−27	−35	−43	−52	−58	−67	−74	−82	−89	−97	−105	−113	−120
40	3	−5	−13	−21	−29	−37	−45	−53	−60	−69	−76	−81	−92	−100	−107	−115	−123

Appendix B
WIND CHILL CHART

Copyright National Electrical Manufacturers Association
Provided by IHS under license with NEMA
No reproduction or networking permitted without license from IHS
Not for Resale

NEMA STANDARDIZATION

The purpose of NEMA Standards, their classification and status are set forth in certain clauses of the NEMA Bylaws, which are quoted below:

Purpose of Standards

National Electrical Manufacturers Association Standards are adopted in the public interest and are designed to eliminate misunderstandings between the manufacturer and the purchaser and to assist the purchaser in selecting and obtaining the proper product for its particular need. Existence of a National Electrical Manufacturers Association Standard does not in any respect preclude any member or nonmember from manufacturing or selling products not conforming to the standard.

(Bylaw—Art. V, Sec. 1)

Definition of a Standard

A standard of the National Electrical Manufacturers Association defines a product, process or procedure with reference to one or more of the following: nomenclature, composition, construction, dimensions, tolerances, safety, operating characteristics, performance, rating, testing, and the service for which they are designed.

(Bylaw—Art. V, Sec. 2, Subsection A)

Dimensions

Where dimensions are given for interchangeability purposes, alternate dimensions satisfying the other provisions of the standards publication may be capable of otherwise equivalent performance.

(NEMA Policy Memorandum 84-2, dated June 7, 1984)

Classes of Standards

National Electrical Manufacturers Association Standards are of two classes:

1. NEMA Standard, which relates to a product commercially standardized and subject to repetitive manufacture, which standard has been approved by at least 90 percent of the members of the Subdivision eligible to vote thereon;
2. Suggested Standard for Future Design, which may not have been regularly applied to a commercial product, but which suggests a sound engineering approach to future development, which standard has been approved by at least two-thirds of the members of the Subdivision eligible to vote thereon.

(Bylaw—Art. V, Sec. 2, Subsection B)

Authorized Engineering Information

Authorized Engineering Information consists of explanatory data and other engineering information of an informative character not falling within the classification of NEMA Standard or Suggested Standard for Future Design.

(Bylaw—Art. V, Sec. 6, 1st Sentence)

Official Standards Proposal

An Official Standards Proposal is an official draft of a proposed standard which is formally recommended to an outside organization(s) for consideration, comment and/or approval.

(Bylaw—Art. V, Sec. 4, Subsection A)

Identification of Status

Standards in NEMA Standards Publications are identified in the foreword or following each standard as "NEMA Standard" or "Suggested Standard for Future Design." These indicate the status of the standard. These words are followed by a date which indicates when the standard was adopted in its present form by the Association.

The material identified as "Authorized Engineering Information" and "Official Standards Proposal" is designated similarly.

Copyright National Electrical Manufacturers Association
Provided by IHS under license with NEMA
No reproduction or networking permitted without license from IHS
Not for Resale

ELECTRIC ENVIRONMENTAL EQUIPMENT SECTION

OF THE

NATIONAL ELECTRICAL MANUFACTURERS ASSOCIATION

MEMBER COMPANIES

Berko Electric
A Marley Company
Peru, IN 46970

Cadet Manufacturing Company
Vancouver, WA 98663

Climate Control
A Unit of Snyder General Corp.
Auburn, NY 13021

Emerson Electric Co.
Emerson Environmental Products Div.
Hazelwood, MO 63042

Fasco Industries, Inc.
Fayetteville, NC 28302

Federal Pacific Electric Company
Lynhurst, NJ 07071

Heat Products, Inc.
Oak Park, IL 60304

Markel Products Company
Buffalo, NY 14223

Seaboard Products Corporation
Edison, NJ 08817

Square D Company
Palatine, IL 60067

Therma-Ray Manufacturing, Inc.
Old Saybrook, CT 06475

TPI Corporation
Johnson City, TN 37601

Vulcan Radiator Company
South Windsor, CT 06474

Wellman Thermal Systems Corp.
Shelbyville, IN 46176

Copyright National Electrical Manufacturers Association
Provided by IHS under license with NEMA
No reproduction or networking permitted without license from IHS
Not for Resale