R-27-05

HE 1-80 6470247 0001215 5

STANDARDS PUBLICATION/ NO. HE 1

nema

Manual for Calculating Heat Loss and Heat Gain for Electric Comfort Conditioning

NEMA

NATIONAL ELECTRICAL MANUFACTURERS ASSOCIATION ■ 2101 L STREET, N.W., WASHINGTON, D.C. 20037

Copyright National Electrical Manufacturers Association
Provided by IHS under license with NEMA
No reproduction or networking permitted without license from IHS
Not for Resale

HE 1-80 6470247 0001216 7

NEMA PUB. NO. HE 1-1980 (1986)

HE 1
Manual for Calculating Heat Loss and Heat Gain for Electric Comfort Conditioning

Part 1 approved as NEMA Standards 11-20-1980; Parts 2, 3, 4, and 5 approved as Authorized Engineering Information 11-20-1980.

Published by:

National Electrical Manufacturers Association
2101 L Street, NW
Washington, DC 20037

© 1987 by the National Electrical Manufacturers Association
Permission is hereby granted to reproduce Forms 1 through 6.
Consult NEMA concerning the reproduction of any other part of this manual.

Copyright National Electrical Manufacturers Association
Provided by IHS under license with NEMA
No reproduction or networking permitted without license from IHS
Not for Resale

TABLE OF CONTENTS

	Page
Foreword	i
Part 1, Definitions	1
Part 2, Insulation	
2.1 Importance	3
2.2 General	3
2.3 Installed Thermal Resistance	3
2.4 Windows	4
2.5 Slab Construction	4
2.6 Vapor Barriers	4
2.7 Thermal Performance Recommendations	5
Part 3, How to Determine Heat Losses	
3.1 Types of Heat Losses	9
3.2 Transmission Heat Losses	9
3.3 Infiltration Heat Losses	12
3.4 Total Heat Losses of Structure	12
3.5 Example Problem	13
3.6 Room-by-room Heat Losses	13
Part 4, Estimating Annual Heating Kilowatt-hour Consumption	
4.1 Formula	19
4.2 Experience Factor (C)	19
Part 5, How to Determine Heat Gains	
5.1 Heat Gains Versus Heat Losses	21
5.2 Types of Heat Gains	21
5.3 Solar Heat Gain	21
5.4 Transmission Heat Gains	22
5.5 Infiltration (and Ventilation) Heat Gains	22
5.6 Internal Heat Gains	23
5.7 Latent Heat Gains	23
5.8 Cooling Load Calculation Form	24
5.9 Example Problem	24
5.10 Room-by-room Distribution of Heat Gains	24
Appendices	
A. Transmission Losses	29
B. How to Determine Resistance of Section	30
C. Design Temperature Differences	37
D. Determination of Transmission Losses	38
E. Air Changes—Infiltration and Ventilation	38
Form 1—Envelope Heat Loss Calculation	40
Form 2—Room-by-room Distribution of Heat Loss	41
Form 3—Electric Comfort Heating Estimate	42
Form 4—Floor Plan	43
Form 5—Heat Gain and Heat Loss Calculation	44
Form 6—Room-by-room Distribution of Heat Gain	45

Copyright National Electrical Manufacturers Association
Provided by IHS under license with NEMA
No reproduction or networking permitted without license from IHS
Not for Resale

Foreword

This manual is a guide for estimating heat loss, heat gain, and energy consumption for the rapidly growing electric comfort conditioning industry. It provides technical data which is applicable, in general, to most types of electric comfort conditioning. It is specifically intended for use when building sections exposed to outdoor weather variations include installed thermal resistance at least equal to the Thermal Performance Recommendations given in par. 2.7 and when no power ventilation is used. The appendices indicate procedures to be followed when the construction includes lower or higher installed thermal resistances in the building sections exposed to outdoors and when power ventilation is used.

The manual includes:

1. A method of computing heat losses, thus indicating the heating capacity that needs to be installed to overcome the heat losses.
2. A method of estimating the annual kilowatt-hour energy consumption to operate the heating system.
3. A method of computing heat gains to determine the cooling capacity that needs to be installed to overcome the heat gains.

Many of the general discussions and specific tabular data in this manual were adapted from the publications of the American Society of Heating, Refrigerating and Air Conditioning Engineers (ASHRAE). Permission of the Society for such use does not necessarily constitute its endorsement of the adaptation, summarization, or form of presentation of materials from its publications.

To obtain detailed information on specific electric heating or cooling products and their application, the data issued by individual manufacturers should be consulted.

The local electric power supplier should be consulted for specific information about design and code requirements, local weather conditions, availability of service, and other information which will be helpful in assuring the complete satisfaction that can be obtained by using modern electric environmental space conditioning.

For additional information on types of heating equipment, systems, and other details of application, fundamentals and equipment, the latest editions of the ASHRAE Handbook and Product Directories should be consulted.*

To utilize electric comfort heating equipment most advantageously, it is important that a building have adequate electrical capacity. For recommendations, the local electric power supplier should be consulted.

This edition revises and supersedes Publication No. HE 1-1974.

User input has been considered in the development of this publication.

*Copies are available from the American Society of Heating, Refrigerating, and Air Conditioning Engineers, Inc. 1791 Tullie Circle, NE, Atlanta, GA 30329.

Copyright National Electrical Manufacturers Association
Provided by IHS under license with NEMA
No reproduction or networking permitted without license from IHS
Not for Resale

Part 1
DEFINITIONS

Air Infiltration. (See Infiltration)

British Thermal Unit (Btu). A unit for measuring quantity of heat. It is approximately the heat required to raise the temperature of a pound of water 1 degree Fahrenheit.

Btu per Hour (Btuh). A unit for measuring the rate of heat transfer.

Conduction, Thermal. Heat transfer through a material in which energy is transmitted from particle to particle without displacement of the particles.

Convection. Heat transfer by movement of fluid. **Natural convection** is due to differences in density from temperature differences. **Forced convection** is produced by mechanical means.

Degree Day. A unit, based on temperature difference and time, used in estimating heating system energy consumption. For any one day whose mean temperature is below 65°F, the degree days for that day is the difference between 65°F and the mean for that day. Degree days for any period is the sum of the degree days for each day in that period.

Design Temperature. The temperature an apparatus or a system is designed to maintain (inside design temperature) or operate against (outside design temperature) under the most extreme conditions to be satisfied. The difference between the inside and the outside design temperatures is the **design temperature difference.**

Infiltration. Air flowing inward as through a crack between window and frame, or door and frame, or frame and wall, etc.

Installed Resistance (R-). The thermal resistance of insulation when applied according to the manufacturer's instructions in the building section described.

Perm. The unit of measurement of permeance equal to 1 grain divided by (sq ft × hr × in. mercury vapor pressure difference).

Permeance. The water vapor permeance of a material (or combination of materials between parallel surfaces) is the ratio of water vapor flow [grains divided by (sq ft × hr)] to the vapor pressure difference (in. mercury) between its surfaces.

Radiation, Thermal. The transmission of heat through space by wave motion; the passage of heat from one object to another without warming the space between.

Temperature. The thermal state of matter with reference to its tendency to communicate heat to matter in contact with it. If no heat flows upon contact, there is no difference in temperature.

Thermal Conductance (C). The number of heat units (Btu) that will pass through 1 square foot of nonuniform material in 1 hour for each degree F difference in temperature between the two bounding surfaces of the material.

Thermal Conductivity (k). The number of heat units (Btu) that will pass through 1 square foot of a uniform material 1 inch thick in 1 hour for each degree F difference in temperature between the two surfaces of the material.

Thermal Resistance (R). The ability of a material or combination of materials to retard or resist the flow of heat. It is the recriprocal of "U".

Thermal Resistivity (r). The ability of unit thickness of a uniform material to retard or resist the flow of heat. It is the reciprocal of thermal conductivity (1/k).

Transmission. In thermal load calculations, a general term for heat travel (by conduction, convection or radiation, or any combination thereof).

"U" (Overall Coefficient of Heat Transfer). The amount of heat flow, expressed in Btu per hour × square feet × degree F temperature difference, between the air on the inside and the air on the outside of a building section (wall, floor, roof, or ceiling). The term is applied to combinations of materials, and also to single materials, such as window glass, and includes the surface conductance on both sides. This term is frequently called the "U value." (For conversion, U = 3.413 W.)

Vapor Retarder. A material which retards the transmission of water vapor. (Permeance not more than 1 perm.)

Ventilation. The process of supplying or removing air, by natural or mechanical means, to or from any space.

"W". The U factor converted into electrical terms for calculations for electric heating. It is the amount of heat flow, expressed in watts per square foot × degree F temperature difference, between the air on the inside and the air on the outside of the building section (wall, floor, roof, or ceiling). (For conversion, W = 0.293 U.)

Watt. The rate of flow of electrical energy (not the quantity but the rate). One watt is equivalent to 3.413 Btuh.

Copyright National Electrical Manufacturers Association
Provided by IHS under license with NEMA
No reproduction or networking permitted without license from IHS
Not for Resale

Part 2
INSULATION

2.1 Importance

Effective insulation properly installed is the key to successful and economical comfort conditioning. Insulation will reduce heat transfer, but no known insulation is effective enough to entirely stop the flow of heat.

In every house, heat escapes through the ceiling, roofs, walls, floor, windows, doors, and by ordinary air leakage. Yet a well-designed, properly constructed house will restrict heat loss through each of these areas. Such balanced or uniform heat loss will provide greater comfort and more economical operation.

Proper insulation results in both lower operating cost and in less required installed capacity for heating and cooling systems. The net cost of insulation is the cost of installing the insulation minus the cost of heating and cooling equipment rendered unnecessary by use of insulation. Economic levels of insulation are those in which this net cost of insulation is paid for by savings in operatng cost within a period of years adjudged satisfactory for the particular application involved.

2.2 General

Insulation should be specified on the basis of its performance in reducing heat transfer—not by insulation thickness in inches. Insulation materials vary in their ability to restrict heat transfer, depending on the type of insulating material, its fiber or cell structure, density, moisture content, and other physical characteristics, and by the protection provided by enclosing liners, and the method and care of application. The insulating value of reflective surfaces, air spaces, and air films also dictates against stating values of insulation in terms of inches of thickness.

2.3 Installed Thermal Resistance

The thermal resistance of a building section is equal to the sum of all of the resistances of the materials encountered, as heat flows from one side to the other. Fig. 2-1 illustrates these resistances as being the inside film resistance plus the resistance of the construction itself, or wall resistance, and the resistance of the outside air film.

A building section consists of the materials provided to support the building structure and inside and outside surface materials selected for appearance and other considerations, plus whatever thermal treatment may be specified to minimize heat transfer and air infiltration. Fig. 2-2 illustrates a type of frame construction frequently encountered in older buildings. The resistances to heat transfer include the inside air film, the plasterboard, the air space, the plywood sheathing, hollow-backed metal siding, and the outside air film. The total of all these resistances is 3.92 (hr) (ft)(°F TD)/Btu, which are units of resistance. (TD = temperature difference.)

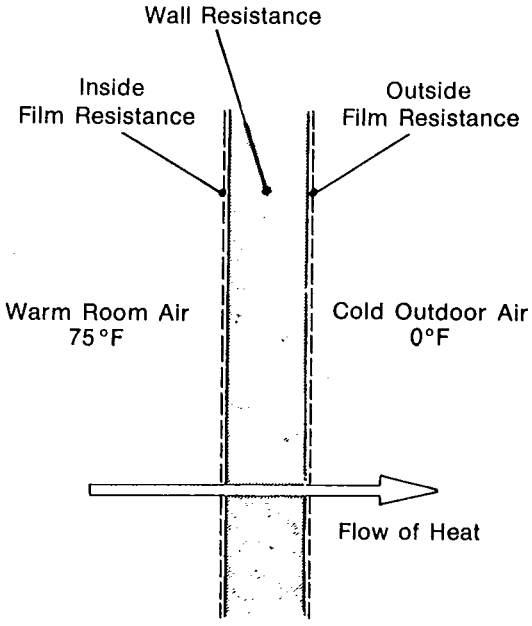

Fig. 2-1

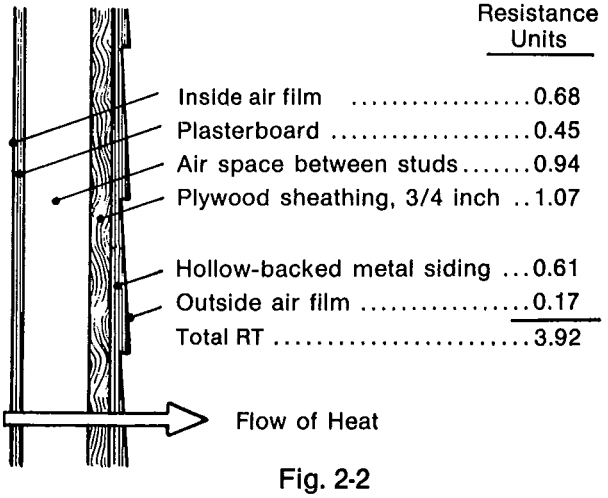

Fig. 2-2

Copyright National Electrical Manufacturers Association
Provided by IHS under license with NEMA
No reproduction or networking permitted without license from IHS

Not for Resale

More recent construction and remodeling of existing construction is likely to use insulation in the stud spaces. As an example, good quality batt or loose fill insulation, properly installed, may have a thermal resistance of about 3.3 per inch of insulation thickness. Each inch added would add a resistance of about 3.3 to the resistance of the building section.

If all 3-5/8 inches of available stud space were filled with such insulation, 11.96 would appear to be added to the 3.92 of the original construction for a total of 15.88.

But with the insulation occupying the air space, the air space no longer furnishes extra resistance and, subtracting the 0.94 of the air space from the total, we get 14.94 (R), the actual resistance of the section with full insulation. It can readily be seen that the insulated resistance is 3.8 times that of the original resistance. It can further be seen that with substantial amounts of insulation the importance of the resistances due to the structural and finish members of the section becomes relatively unimportant. In walls, the total resistance will be the resistance of the insulation plus about three additional resistance units for the air films and structural and finish materials.

Similar reasoning can be applied to floor and ceiling construction to arrive at similar conclusions and the appropriate value of resistance of the structural members of such sections.

2.4 Windows

Windows consist of one or more thin sheets of glass, a material of high thermal conductivity. The resistances to heat transfer are the inside and outside films, plus the resistance of air spaces where more than one layer of glass is used. If the glass had no resistance whatever to heat flow, the winter resistance of the two air films (inside and out) would total 0.85. Actually, the moderate resistance of glass increases the value to 0.88. If two sheets of glass are used, there is in addition an air space, and the R value is increased to about 1.45. Similarly, if three sheets are used, two air spaces are involved, and the R value is about 2.13. Consideration of these numbers leads to the conclusion that double glazing reduces the heat loss through glass to about half that of single glazing; and triple glazing (three layers of glass) reduces the heat loss to about one third that of single glass.

2.5 Slab Construction

For floor slabs in contact with earth (slab on grade or slab on fill above grade), the primary heat loss is through the edge of the slab, and little loss is experienced at points distant from the edge. Therefore, insulating the exposed outside edge of the slab accomplishes the greatest good and has been found to be adequate as the only insulation treatment necessary for slab construction.

Figs. 2-3 and 2-4 illustrate two practical methods for insulating the edges of slabs. One is with perimeter insulation at the edge and extending down vertically for a total width of 12 to 24 inches. The other shows insulation extending over the edge of the slab and back under the slab for a total width of 12 to 24 inches. Job site conditions will normally determine which is the preferred method as they are considered equally effective.

In existing construction, the vertical insulation illustrated in Fig. 2-4 can be installed on the outside face of the footings (clear to the top of the footing). In such instances, the insulation should be covered (from the top to at least 6 inches below grade) with a rich Portland cement mix to prevent damage to the insulation from mowing or gardening activities and from erosion caused by water freezing and thawing intermittently.

2.6 Vapor Retarders

In any structure, during the heating season, condensation on cold surfaces by water vapor passing into the spaces within the walls, floors and ceilings should be minimized. Moisture within insulation reduces the effectiveness of the insulation to some degree. Substantial quantities may stain the inside walls and promote deterioration of the structural members of the building section. Condensation within the building

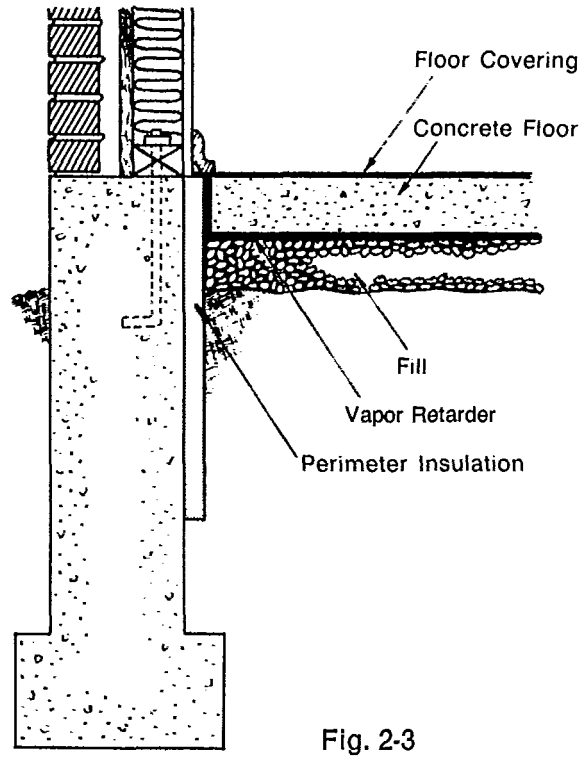

Fig. 2-3

Copyright National Electrical Manufacturers Association
Provided by IHS under license with NEMA
No reproduction or networking permitted without license from IHS
Not for Resale

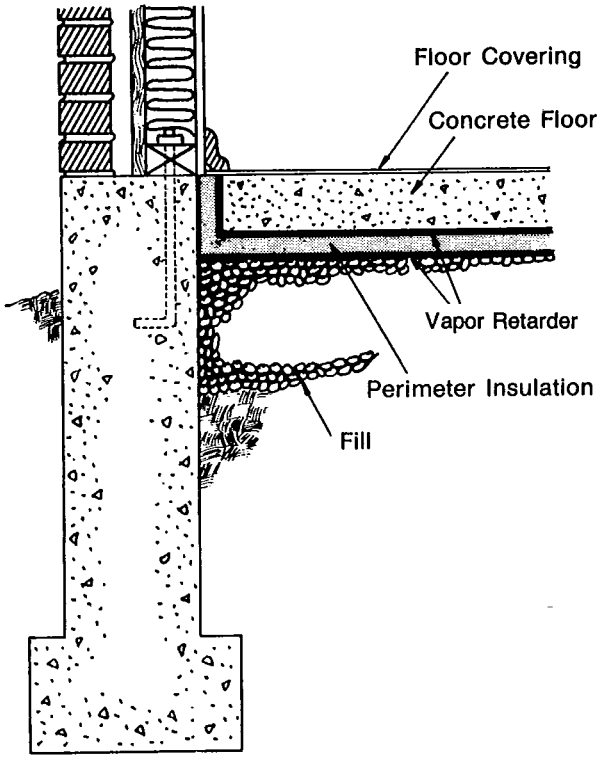

Fig. 2-4

sections can be prevented by assuring that there is an easier path for the water vapor to escape from within the building section to the outside than was experienced by the water vapor in passing from the occupied area to within the building section.

The inside surfacing of the structure should have a resistance to water vapor flow markedly greater than that of the outside surfacing to assure the escape of any vapor that may have permeated from the heated space into the building section.

All materials have some resistance to the passage of water vapor, just as they have some resistance to the passage of heat. In some types of construction, it is possible that the inherent vapor resistance of the outside construction materials is low enough to avoid excessive condensation within the section, and no special vapor retarder is needed. Where this not assured, an inside vapor retarder should be used, or the outside retarder to vapor flow should be reduced to markedly less than the inside. A permeability of the outside construction seven times that of the inside has been found generally satisfactory in the continental United States (including Alaska).

The effectiveness of a material as a vapor retarder is indicated by its permeance. Permeance is measured in perms. A material with a permeance of 1 perm or less is considered a vapor retarder. It is important that vapor retarders not be damaged during installation. Tears or holes must all be adequately repaired, or the value of the vapor retarder is materially reduced.

A vapor retarder should be used between earth and slabs, basement walls and basement floors. In crawl spaces, the earth should be covered with a vapor retarder, suitably protected from damage by sand or other cover.

2.7 Thermal Performance Recommendations

2.7.1 Insulation

a. For economical operation, insulation values listed in Table 2-1 should be used.

b. For heated and partially heated basements, it is suggested that walls separating heated areas from unheated areas be insulated. Wall insulation of at least R-7 is suggested for this application.

c. For economical operation, slab edge insulation values listed in Table 2-2 should be used.

2.7.2 Ventilation

a. Positive mechanical exhaust to the outside should be provided in bathrooms and kitchens (except for systems with positive humidity control). It is suggested that a humidistat in the living area (but not in bathrooms) be installed paralleling the manual switch on the kitchen fan.

b. Natural ventilation of structural spaces should meet or exceed the minimums illustrated in Figs. 2-5 and 2-6. Ridge vent area may replace all or part of the gable vent illustrated. The vent areas indicated are net free area. If screened by insect screen, twice the indicated net free area is required.

Copyright National Electrical Manufacturers Association
Provided by IHS under license with NEMA
No reproduction or networking permitted without license from IHS
Not for Resale

Table 2–1

Heating Degree Day	Recommended Minimum RT Values for Ceiling, Wall, and Floor Sections for Electric Heat*						
	Ceiling†	Walls	Floors Over Unheated Basements and Crawl Spaces	Walls Heated Basements	Windows	Storm Doors Required‡	Sliding Glass Doors
0–1000	20	12.5	0	0	.88 (sgl)	No	.88 (sgl)
1001–2500	25	14.3	0	0	1.45 (dbl)	No	1.45 (dbl)
2501–3500	33.3	20	14.3	5.9	1.45 (dbl)	No	1.45 (dbl)
3501–4500	33.3	20	20	5.9	1.45 (dbl)	No	1.45 (dbl)
4501–6000	33.3	20	20	10	2.13 (Tpl)	Yes	1.45 (dbl)
6001–7000	38.5	20	20	10	2.13 (Tpl)	Yes	1.45 (dbl)
7001 +	38.5	20	20	10	2.13 (Tpl)	Yes	1.45 (dbl)

*Alternate R values can be used for walls as long as the total exterior wall areas (opaque wall), windows, and doors have a combined thermal transmittance value that does not exceed the value given in HUD "Minimum Property Standard for One- and Two-Family Dwellings" 4900.1.
†Includes roof/ceiling assemblies in which the finished ceiling is the underside of the roof deck.
‡In areas with 1501 or more heating degree days a storm door is recommended when the primary door is a hollow core door or is over 25 percent glass.

Table 2-2
Minimum Recommended RT Values for Perimeter Insulation for Slabs on Grade

Heating Degree Days	Minimum RT Values	
	Heated Slab	Unheated Slab
500	2.8	0
1000	3.5	0
2000	4.0	0
2500	4.4	2.5
3000	4.8	2.8
4000	5.5	3.5
5000	6.3	4.2
6000	7.0	4.8
7000	7.8	5.5
8000	8.5	6.2
9000	9.2	6.8
10000	10.0	7.5

Copyright National Electrical Manufacturers Association
Provided by IHS under license with NEMA
No reproduction or networking permitted without license from IHS
Not for Resale

CRAWL SPACE VENTILATION

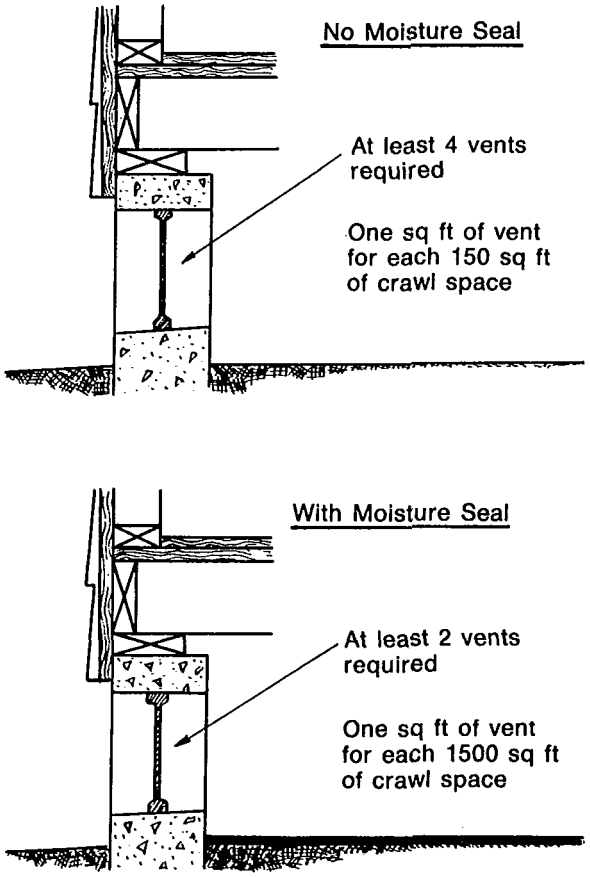

Fig. 2-5

ATTIC VENTILATION

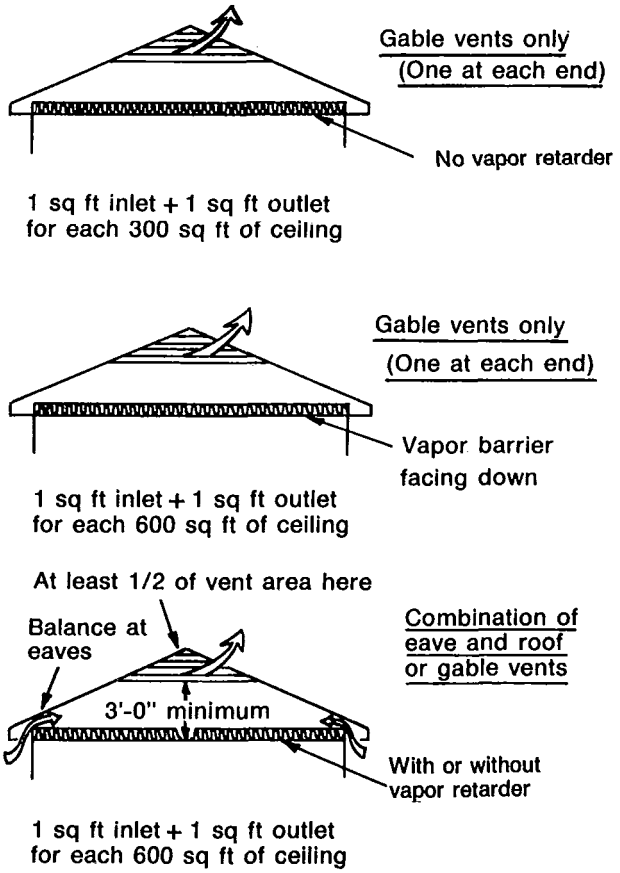

Fig. 2-6

Copyright National Electrical Manufacturers Association
Provided by IHS under license with NEMA
No reproduction or networking permitted without license from IHS
Not for Resale

Part 3
HOW TO DETERMINE HEAT LOSSES

3.1 Types of Heat Losses

In determining heat losses of a structure, there are two types of heat losses to be considered:

a. Losses due to heat transmission through the various building sections, such as walls, windows, doors, ceilings and floors.

b. Heat is also lost from the building by flow of air through the structure due to operation of ventilating fans or to infiltration of air around and through cracks at doors and windows or other openings in the structure.

In the following calculations heat loss is expressed in watts. To convert any heat loss from watts to Btu per hour (Btuh), multiply the watts value by 3.41.

3.2 Transmission Heat Losses

3.2.1 Heat lost through a building section is found by multiplying the area times the temperature difference and dividing this product by 3.41 times the total thermal resistance of the section:

$$HL = \frac{A \times TDF}{3.41 \times RT} \qquad \text{(Equation 1)}$$

Where—

HL = heat loss of section in watts.
A = area of exposed section in square feet.
TDF = difference in temperature between the air on the inside and on the outside in degrees F.
RT = total thermal resistance of the section in hour per square feet per degrees F per Btu. RT is the sum of all the resistances R, encountered between inside and outside air.

Insulation values in the United States are normally specified by thermal resistance R. However, insulation values specified by coefficient of heat transfer or U, expressed in Btu per hour × square feet × degree F temperature difference will sometimes be encountered. This U value is the reciprocal of the R value:

$$U = \frac{1}{R} \quad \text{or} \quad R = \frac{1}{U} \qquad \text{(Equation 2)}$$

It is often desirable to determine a multiplier for an area which results in section heat loss. Examination of Equation 1 shows that multiplier to be the temperature difference divided by 3.41 times the total thermal resistance of the section:

$$\text{Multiplier} = \frac{TDF}{3.41 \times RT} \qquad \text{(Equation 3)}$$

The transmission load for each exposed section is found by:

a. Determining the area (square feet) of the outside exposed section.

b. Determining the total installed resistance (RT) of the section involved. The following means of determining total resistances are suggested:
Walls—Insulation R- plus 3 equals installed resistance (RT).
Floors above unheated spaces—Insulation R- plus 2 equals installed resistance (RT).
Ceilings—Insulation R- plus 1-1/2 equals installed resistance (RT).
Single Glass—Total resistance (RT) is 0.88.
Double Glass—Total resistance (RT) is 1.45.
Triple Glass—Total resistance (RT) is 2.13.
Doors—If glass is included, use RT of glass for entire door. If no glass is used, use RT of 1.0 for doors less than 1 inch thick or for any unfilled metal door; use RT of 2.0 for nonmetal doors over 1 inch thick and for filled metal doors.

c. Calculating the section transmission loss by dividing the TDF by 3.41 times the RT determined above which gives the multiplier of Equation 3.*

d. Adding all section transmission losses to determine the total building transmission heat loss.

3.2.2 An alternative method of determining transmission heat losses utilizes the relationship of the resistance to heat flow and the area of each outside exposed section of the structure. The result of dividing 3.41 times the resistance (RT) into the area involved gives the load in watts per degree F temperature difference. The transmission load for each exposed section is found by:

a. Determining the area (square feet) of the outside exposed section.

b. Determining the total installed resistance (RT) of the section involved as in 3.2.1, item b.

c. Dividing the area by 3.41 times the RT to determine the heat loss. Fig. 3-1 provides a graphical solution to this division, giving the loss in watts per degree F. Table 3-1 provides tabulation of this heat loss in watts per degree F for various areas and resistances (RT). To determine this heat loss in Btuh per degree F, multiply this number by 3.41.

*The TDF for exposure to unheated spaces or to earth are different from those to outdoors (see Appendix C).

Copyright National Electrical Manufacturers Association
Provided by IHS under license with NEMA
No reproduction or networking permitted without license from IHS
Not for Resale

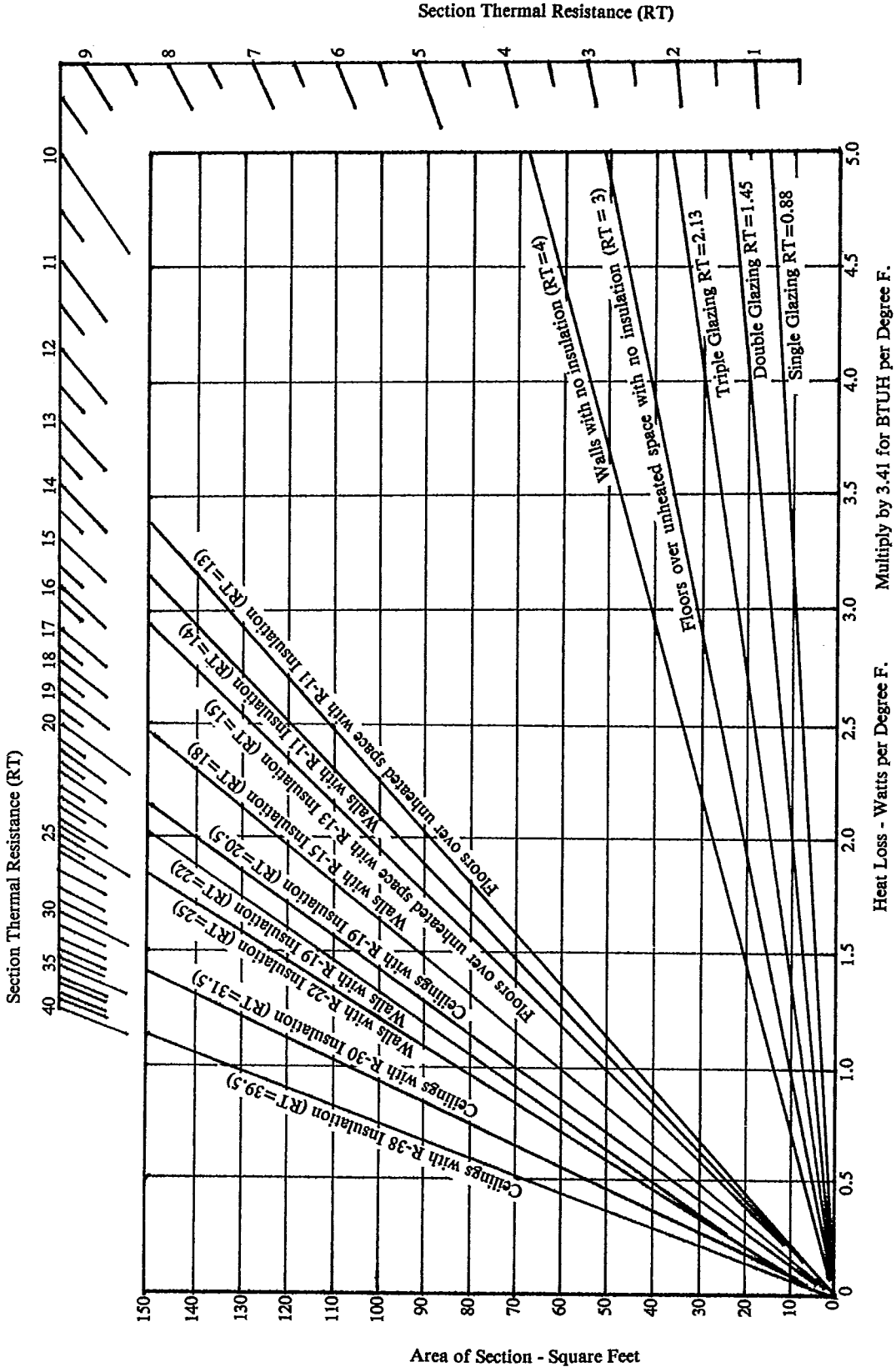
Section Thermal Resistance (RT)
Section Thermal Resistance (RT)
Area of Section - Square Feet
Heat Loss - Watts per Degree F.
Multiply by 3.41 for BTUH per Degree F.
Walls with no insulation (RT=4)
Walls with no insulation (RT = 3)
Floors over unheated space with R-11 insulation (RT=13)
Floors over unheated space with R-11 insulation (RT=14)
Floors over unheated space with R-13 insulation (RT=15)
Walls with R-11 insulation (RT=18)
Ceilings with R-19 insulation (RT=20.5)
Walls with R-13 insulation (RT=22)
Ceilings with R-19 insulation (RT=25)
Walls with R-22 insulation (RT=31.5)
Ceilings with R-30 insulation (RT=39.5)
Ceilings with R-38 insulation (RT=39.5

Copyright National Electrical Manufacturers Association
Provided by IHS under license with NEMA
No reproduction or networking permitted without license from IHS
Not for Resale

Table 3-1—HEAT LOSS, WATTS PER DEGREE F

WATT LOAD PER DEGREE F	WINDOWS			WALLS With Insulation Having Installed Thermal Resistance (R-) of					CEILINGS With Insulation Having Installed Thermal Resistance (R-) of				FLOORS Over Unvented Crawl Space with Insulation Having Installed Thermal Resistance (R-) of				FLOORS Slab on Grade with Edge Plus 12"-24" Insulation with (R-) of			INFILTRATION OF CONSTRUCTION Air Changes Per Hr.		
	Single Glazing RT = 0.88	Double Glazing 1.45	Triple Glazing 2.13	0	R-11	R-15	R-19	R-22	R-19	R-22	R-30	R-38	0	R-11	R-13	R-19	0	R-5	R-7	¼ Air Change	½ Air Change	¾ Air Change
1	3.0	4.9	7.3	14	48	61	75	85	70	80	107	135	10	44	51	72	4.1	10.2	14.3	775	387	258
1-1/2	4.5	7.4	11	20	72	92	113	128	105	120	161	202	15	66	77	107	6.1	15.3	21.5	1163	581	387
2	6.0	9.8	14.6	27	95	123	150	171	140	160	215	269	20	89	102	143	8.2	20.5	28.6	1550	774	516
2-1/2	7.5	12.3	18.3	34	119	153	188	213	175	200	268	337	26	111	128	179	10.2	25.6	35.8	1938	967	645
3	9.0	14.7	21.9	41	143	184	225	256	210	240	322	404	31	133	153	215	12.3	30.7	43.0	2325	1161	774
3-1/2	10.5	17.2	25.6	48	167	215	263	298	245	280	376	471	36	155	179	251	14.3	35.8	50.1	2713	1355	903
4	12	19.6	29.2	55	191	246	300	341	280	320	430	539	41	177	205	286	16.4	41.0	57.3	3100	1548	1032
4-1/2	13.5	22	32.9	61	215	276	338	384	315	361	483	606	46	199	230	322	18.4	46.0	64.4	3488	1742	1161
5	15	24.5	36.5	68	239	307	375	426	350	401	537	673	51	222	256	358	20.5	51.2	71.6	3875	1935	1290
5-1/2	16.5	27	40.2	75	263	338	413	469	384	441	591	741	56	244	281	394	22.5	56.3	78.8	4263	2128	1419
6	18	29.4	43.8	82	286	368	450	512	419	481	644	808	61	266	307	430	24.6	61.4	85.9	4650	2322	1548
6-1/2	19.5	31.9	47.5	89	310	399	488	554	454	521	698	875	66	288	332	465	26.6	66.5	93.1	5038	2516	1677
7	21	34.3	51.1	95	334	430	525	597	489	561	752	943	72	310	358	501	28.6	71.6	100.3	5425	2709	1806
7-1/2	22.5	36.8	54.8	102	358	460	563	639	524	601	806	1010	77	332	384	537	30.7	76.7	107.4	5813	2903	1935
8	24	39.2	58.4	109	382	491	600	682	559	641	859	1077	82	355	409	573	32.7	81.8	114.6	6200	3096	2064
8-1/2	25.5	41.7	62	116	406	522	638	725	594	681	913	1145	87	377	435	609	34.8	86.9	121.7	6588	3290	2193
9	27	44.1	65.7	123	430	552	675	767	629	721	967	1212	92	399	460	644	36.8	92.1	128.9	6975	3483	2322
9-1/2	28.5	46.6	69.4	130	454	583	713	810	664	761	1020	1280	97	421	486	680	38.9	97.2	136.1	7362	3677	2451
10	30	49	73	136	477	614	750	853	699	801	1074	1347	102	443	512	716	40.9	102.3	143.2	7750	3870	2580
20	60	98	146	273	955	1228	1500	1705	1398	1603	2148	2694	205	887	1023	1432	81.8	204.6	286.4	15500	7740	5160
30	90	147	219	409	1432	1841	2251	2558	2097	2404	3222	4041	307	1330	1534	2148	122.8	306.9	430.0	23250	11610	7740
40	120	196	292	546	1910	2455	3001	3410	2796	3205	4297	5388	409	1773	2046	2864	163.7	409.2	572.9	31000	15480	10320

DIRECTIONS FOR USING TABLE 3-1:

1. Enter table at top under correct value in the pertinent section.
2. Read down to the nearest value in linear feet (slab on grade), square feet (for windows, walls, ceiling, and unvented crawl space) or cubic feet (infiltration).
3. Read across to the first column to determine the watt load per degree F.
4. Sum all watt loads and multiply by the temperature difference to obtain total heat loss.
5. To obtain Btuh per degree F, multiply watt values by 3.41.

NOTE: If the area being figured is larger than any tabulated, divide the area by 10,000 or 1,000, follow the directions above, and multiply the result by the number used for division earlier (10, 100, or 1000).

d. Basements are a special situation, and are more accurately discussed in Appendix C. Keeping the basement loss separate from all other loads until final summation is necessary because of the variation in temperature difference used in calculating basement transmission losses.
e. Add all section transmission losses to determine the building transmission load per degree F.

3.3 Infiltration Heat Losses

The amount of air which flows through a building depends on the type and use of the structure, the type and number of doors, windows or other openings in the building, the quality of the materials used, the workmanship with which the materials were installed, and the climate, especially wind velocities in cold weather.

For determination of complete building "envelope load," the "air change method" of estimating infiltration heat losses has been found quite satisfactory for residential, apartment, motel and similar light commercial structures.

A rate of one-half to three-quarters of an air change per hour is suggested for average constructions of electrically heated buildings.

a. For one-quarter air change per hour, the infiltration factor is 0.00129 watts per degree F per cubic foot.
b. For one-half air change per hour, the infiltration factor is 0.00258 watts per degree F per cubic foot.
c. For a three-quarter air change per hour, the infiltration factor is 0.00387 watts per degree F per cubic foot.
d. The construction feature losses are as follows:
   (1) Fireplace with tight fitting damper equals 5.86 watts per degree F.
   (2) Fireplace with average damper equals 14.6 watts per degree F.
   (3) Fireplace with no damper equals 43.9 watts per degree F.
   (4) Each exhaust fan without auto louver or damper equals 11.7 watts per degree F.

   NOTE—If exhaust fans are provided with automatic dampers or louvers, no construction feature loss is added by fans. If a fireplace is provided with a dampered separate outside air intake for combustion air, no construction feature loss is added by such a fireplace.

3.4 Total Heat Losses of Structure

The sum of all losses is the building load. Add the transmission losses determined in accordance with par. 3.2.1 to the infiltration and construction feature losses of par. 3.3. (Multiply the watts per degree by the design temperature difference before adding.) The sum is the total heat loss of the structure.

When the alternative method of determining the building transmission load per degree F is used, par. 3.2.2 (c), that load is added to the infiltration and construction feature losses from par. 3.3 (also per degree). Multiplying the resulting building load per degree by the design temperature difference produces the total building load.

From standpoints of economy, satisfaction, energy conservation and comfort, the best installed equipment capacity would be the lowest which would meet design conditions. Experience with highly unusual weather (averaging only once in 15 or more years) has demonstrated that electrically heated homes in mild climates did not lack capacity in weather having 50 percent more temperature difference than the design temperature difference. Review of experience with substantial numbers of homes in areas representative of climates throughout the country indicates that the actual electric heating demand rarely exceeds two-thirds the calculated heat loss in properly insulated homes.

When radiant ceiling heat is installed, the temperature can decrease to a lower level providing the same comfort. Consult the manufacturer for the acceptable comfort levels.

In order to provide heat recovery for set-back situations, it is recommended that the installed heating equipment equal the calculated heat loss.

When the electric heater is not located within or does not discharge directly into the heated space, some consideration must be given to the heat loss of the connecting pipes or ducts. If the ducts are located entirely within the heated space, no additional heat is required for duct losses. If the distribution system includes ducts or pipes which are outside the heated space (such as ducts running through attics, crawl spaces, or unheated rooms) the heat loss to the ducts or pipes should be included in the heating load.

To estimate the duct heat loss, calculate design heat loss per square foot by dividing the total heat loss in watts by the total area of heating space in square feet. Refer to Table 3-2 for the percent loss, based on outdoor design temperature. Multiply total heat loss by this percent factor to obtain approximate heat loss due to ducts. Add this heat loss to the previously calculated total to obtain overall heat loss. Use the overall total for estimating heating cost and selecting proper size heating equipment.

Copyright National Electrical Manufacturers Association
Provided by IHS under license with NEMA
No reproduction or networking permitted without license from IHS
Not for Resale

Table 3-2

Duct Heat Loss Allowance (Percent)

Design Heat Loss* Watts/Ft²	Outdoor Design Temperature		
	Below 0°F	0 to +15°F	Above 15°F
Less than 35	20%	15%	10%
35 or more	15%	10%	5%

*Design heat loss per square foot is found by dividing total heat loss in watts by total heated area in square feet.

3.5 Example Problem

Fig. 3-2 shows the floor plan of the residence used in this example problem. The residence is a one-story house built over a crawl space vented in accordance with the moisture seal recommendations of Fig. 2-5.

3.5.1 The construction uses:

a. Double glass.
b. Wall insulation—R-19.
c. Ceiling insulation—R-33.
d. Floor insulation over crawl space—R-19.
e. Perimeter floor insulation at slab floor edges—R-5.

3.5.2 The design conditions are:

a. Outdoor
   (1) Winter—0°F.
   (2) Summer—95°F.
   (3) Medium daily temperature range, M = 15 to 25 degrees F.
b. Inside, winter—70°F.
   Inside, summer—78°F.

The calculation of the heating load is shown on Forms 1, 2, and 3, pages 15-18.

3.6 Room-by-room Heat Loss

To determine the portion of the total load to be installed in each room, the use of Form 2 is recommended, with the following procedures:

a. Insert in Column 1 the room designation.

b. Insert in Column 2 the total length of exposed outside wall for each room. Exposed outside walls of closets and other areas without heating units should be added to those of the room into which they open.

c. Insert in Column 3 window and door areas, value determined as follows:

   (1) Actual area of windows glazed with double glass or with storm windows, or equivalent, and of wooden doors.
   (2) Twice the area of windows if single glazed, and of metal doors.
   (3) Two-thirds the area of windows if triple glazed.
   (4) Glass and door areas may not all meet any single situation described in (1), (2), or (3). Equivalent areas for the portion under each circumstance should then be calculated and the sum of all inserted in Column 3. No part of the area should appear in more than one situation; all glass and door areas should appear in some one of the situations. Accuracy is not seriously compromised by considering the entire door as being made like the predominant construction.

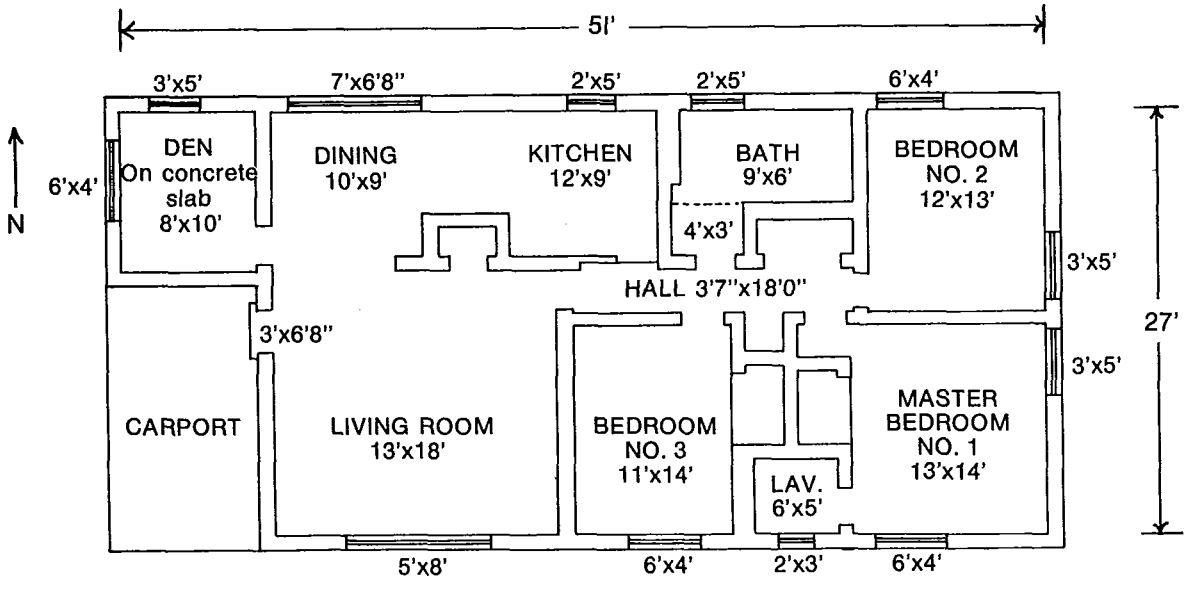

CEILING HEIGHT 8'

Fig. 3-2

Copyright National Electrical Manufacturers Association
Provided by IHS under license with NEMA
No reproduction or networking permitted without license from IHS
Not for Resale

d. Add Columns 2 and 3 for each line, and insert the sum in Column 4. (Column 2 + Column 3 = Column 4.)
e. Total Column 4. Divide the value shown for each room in Column 4 by that total, and enter the quotient in Column 5 for that room. (Column 4 value divided by total for Column 4 = Column 5.)
f. Multiply the value in Column 5 by the total building load (determined as described in 3.4) to determine the heating load for each room, and enter the product in Column 6.
g. Select units to provide the required capacity (Column 6) for each room. Enter the name or rating of the units selected in Columns 7 and 8.
h. Units should be selected so capacity in each room is between 95 and 100 percent of calculated required capacity.
i. Insert in Column 9 the total capacity of the unit or units in each room (Columns 7 and 8). The total installed capacity in Column 9 should be as close to and not exceed the required capacity shown in Column 6.

Copyright National Electrical Manufacturers Association
Provided by IHS under license with NEMA
No reproduction or networking permitted without license from IHS
Not for Resale

Copyright National Electrical Manufacturers Association
Provided by IHS under license with NEMA
No reproduction or networking permitted without license from IHS
Not for Resale

NEMA

FORM 1—ENVELOPE HEAT LOSS CALCULATION

Exposure	1 Design Temperature Difference	2 Applicable Length, Area or Volume	3 Section Thermal Resistance	4 Multiplier* Watts/Degree	5 (1 × 4) Heat Loss	Revised RT	Revised U	Revised Multiplier* Watts/Degree	Revised Heat Loss
Gross Wall #1		1248 Ft²							
Glass #1	70°F	254 Ft²	RT=1.45	51.4	3596	213		34.97	2448
Doors	70°F	20 Ft²	RT=2.0	2.9	203				203
Net Wall #1	70°F	974 Ft²	RT=22	13.0	910	25		11.4	798
Gross Wall #2									
Glass #2									
Doors #2									
Net Wall #2									
Ceilings	70°F	1241 Ft²	RT=34.5	10.5	735				735
Floors (Not Slab)	70°F	1161 Ft²	RT=21	16.2	1135	24		14.2	994
Slab Floors (Perimeter)	70°F	26 Ft²	RT=5	2.5	175				175
Infiltration	70°F	9864 Ft³	.00258w/Ft³	25.5	1785				1785
Ventilation									
TOTAL					8539				7138

Slab (Perimeter)—Multiply length of exposed edge by 5, then divide that product by 10.2 times the resistance (R) of the perimeter insulation.
Infiltration—1/4 air change/hour = 0.00129 watts/°F/Ft
1/2 air change/hour = 0.00258 watts/°F/Ft
3/4 air change/hour = 0.00387 watts/°F/Ft
Fireplace damper—Tight = 5.86 watts/°F
Average = 14.6 watts/°F
No damper = 43.9 watts/°F

Exhaust Fans—No damper = 11.7 watts/°F
Glass—Single glazing - RT = 0.88
Double glazing - RT = 1.45
Triple glazing - RT = 2.13
Doors—Less than 1" thick - RT = 1.0
More than 1" thick - RT = 2.0

*Multiplier = $\frac{2}{3.41 \times RT}$ = watts/°F

HE 1-80

6470247 0001231 5

Copyright National Electrical Manufacturers Association
Provided by IHS under license with NEMA
No reproduction or networking permitted without license from IHS
Not for Resale

NEMA

FORM 2—ROOM-BY-ROOM DISTRIBUTION OF HEAT LOSS

NAME: _____ LOCATION: _____ DATE: _____ TELEPHONE: _____

CONSTRUCTION: New: X Conversion: Stories: Basement Use: DESIGN TEMP: 70 °F Inside; 0 °F Outside; 70 °TD; 5945 DD

INSULATION: Walls: R- 19 RT 22 Ceilings: R- 33 RT 34.5 Floors: R- 19 RT 21 Doors: FILLED METAL Windows: DOUBLE-GLAZED

FLOOR AREA OF HEATED AREA, SQ. FT. 1233 kW HEAT LOSS: 8.5 ESTIMATED ANNUAL HEAT COST: $370.

The figures quoted herein are estimates *only* and shall not constitute a guarantee.

1		2	3	4 (2 & 3)	5	6	7	8	9
Name of Room	Size of Room	Wall, Linear Feet	Windows and Doors, Adjusted Sq. Ft.	Equivalent Wall, Linear Feet	Fraction of Equivalent Wall,	Required Heating Capacity, kW or Watts	Heating Units	Heating Units	Installed Heating Capacity, kW or Watts
DEN	8x10	26	39	65	15.1 %	1289	500	750	1250
DINING	10x9	10	47	57	13.2	1127	1125		1125
KITCHEN	12x9	12	10	22	5.1	435	375		375
BATH	9x6	9	10	19	4.4	376	375		375
BDRM-2	12x13	25	39	64	14.9	1272	500	750	1250
BDRM-1 + LAV.	13x14	33	45	78	18.1	1546	750	750	1500
BDRM-3	11x14	11	24	35	8.1	692	750		750
L.R.	13x18	31	60	91	21.1	1802	1000	750	1750
TOTALS		157	274	431	100 %	8539			8325

TOTAL HEAT LOSS = ( ) Watts

ESTIMATED ANNUAL ELECTRIC USE = (8.5) kW Loss X (~~5954~~ 5945) Degree Days X (17) C / TD = (12290) kW hr/yr X (.03) Average Rate = $370 Annual Cost

NOTE: The totals in Forms 1 and 2 will differ from those in Form 3, due to the fact that Forms 1 and 2 use a percent of outside wall area per room and are, therefore, an approximation where the method used in Form 3 is a more complex and, therefore, more accurate method of calculating heat loss.

HE 1-80
6472047 0001232 5

Copyright National Electrical Manufacturers Association
Provided by IHS under license with NEMA
No reproduction or networking permitted without license from IHS
Not for Resale

NEMA

FORM 3—ELECTRIC COMFORT HEATING ESTIMATE

FOR:

BLDG. USE RESIDENCE	DESIGN TEMP. INSIDE T_I 70 °F	INSULATION TYPE BATT	CONSTRUCTION 1st FLOOR: CRAWLSPACE X BASEMENT ___ SLAB ___
STREET	OUTSIDE T_O 0 °F	"R" FACTORS: WALL R-19	BASEMENT: HEATED NONE UNHEATED ___
CITY	TD (T_I-T_O) 70 °F	FLOOR R-19 CEILING R-33	BASEMENT: WALL ABOVE GRADE N/A BELOW GRADE ___
TYPE CONST.	DEGREE DAYS 5945	WINDOW TYPE DOUBLE	FIREPLACE NO. NONE . DAMPERS ___
NO. OF STORIES 1	INFILTRATION OR AIR CHANGES 1/2	DOOR TYPE FILLED METAL	SLAB INSULATION TYPE STYROFOAM "R" FACTOR 5

ROOM NAME			DEN		DINING		KITCHEN		BATH		BDRM. #2		BDRM-1 +LAV.		BDRM. #3		L.R. + HALL	
ROOM DIMENSION			W L CH: 8 10 8		W L CH: 10 9 8		W L CH: 12 9 8		W L CH: 9 9 8		W L CH: 12 13 8		W L CH: 13_6 14_5 8		W L CH: 11 14 8		W L CH: 134 18 8	
ROOM SIZE, SQ FT			80		90		108		81		156		212		154		306	
EXPOSED WALL, LINEAR FEET			26		10		12		9		25		33		11		31	
GLASS AREA (W x L)			(6x4) (3x5)		7x6'8		2x5		2x5		(6x4)+(3x5)		(6x4)+(2x3)+(3x5)		(6x4)		(3x8W)(3x6'8D)	
Source of Loss	RT	Multiplier*	Area	Watts Loss	Area	Watts Loss	Area	Watts Loss	Area	Watts Loss	Area	Watts Loss	Area	Watts Loss	Area	Watts Loss	Area	Watts Loss
Gross Wall, Sq Ft			208		80		96		72		200		264		88		248	
Glass Area, Sq Ft	1.45	14.16	39	552	47	665	10	142	10	142	39	552	45	637	24	340	40	566
Door Area, Sq Ft	2.0	10.26															20	205
Net Wall Area, Sq Ft	22	.93	169	157	33	31	86	80	62	58	161	150	219	204	64	60	188	175
Ceiling Area, Sq Ft	84.5	.59	80	47	90	53	108	64	81	48	156	92	212	125	154	91	306	180
Floor Area, Sq Ft	21	.97			90	87	108	105	81	79	156	151	212	206	154	150	306	297
Slab Edge, Linear Ft	5	6.86	26	178														
Room Volume, Cubic Ft		.18	640	115	720	130	864	155	648	117	1248	225	1696	305	1232	222	2448	441
ROOM TOTALS, Watts			1049		966		546		444		1170		1477		863		1864	
Equipment: Baseboard			500 W		940 W		500 W		500 W		500 W		500 W		940 W		1000 W	
Baseboard			500 W								750 W		1000 W				750 W	
Baseboard																		
Other (Specify)																		
Thermostat																		
Installed Watts			1000 W		940 W		500 W		500 W		1250 W		1500 W		940 W		1750 W	

PREPARED BY: ___ DATE: ___	TOTAL HEAT LOSS WATTS 8379	TOTAL CONNECTED LOAD SPACE HEATING WATTS 8380	ESTIMATED ANNUAL HEATING COST SEE FORM 4 $ ___

*Multiplier - TD ÷ (3.41 × RT) = Watts/Ft²
Multiplier for Slab Floor, (TD × 5) ÷ (10.2 × RT) = Watts/Ft
Multiplier for infiltration, 1/4 air change/hr., 0.00129 × TD = Watts/Ft³
1/2 air change/hr., 0.00258 × TD
3/4 air change/hr., 0.00387 × TD

The figures quoted herein are estimates only, and shall not constitute a guarantee.

Watts loss = Area × multiplier

4702470001233 7

FORM 4—FLOOR PLAN

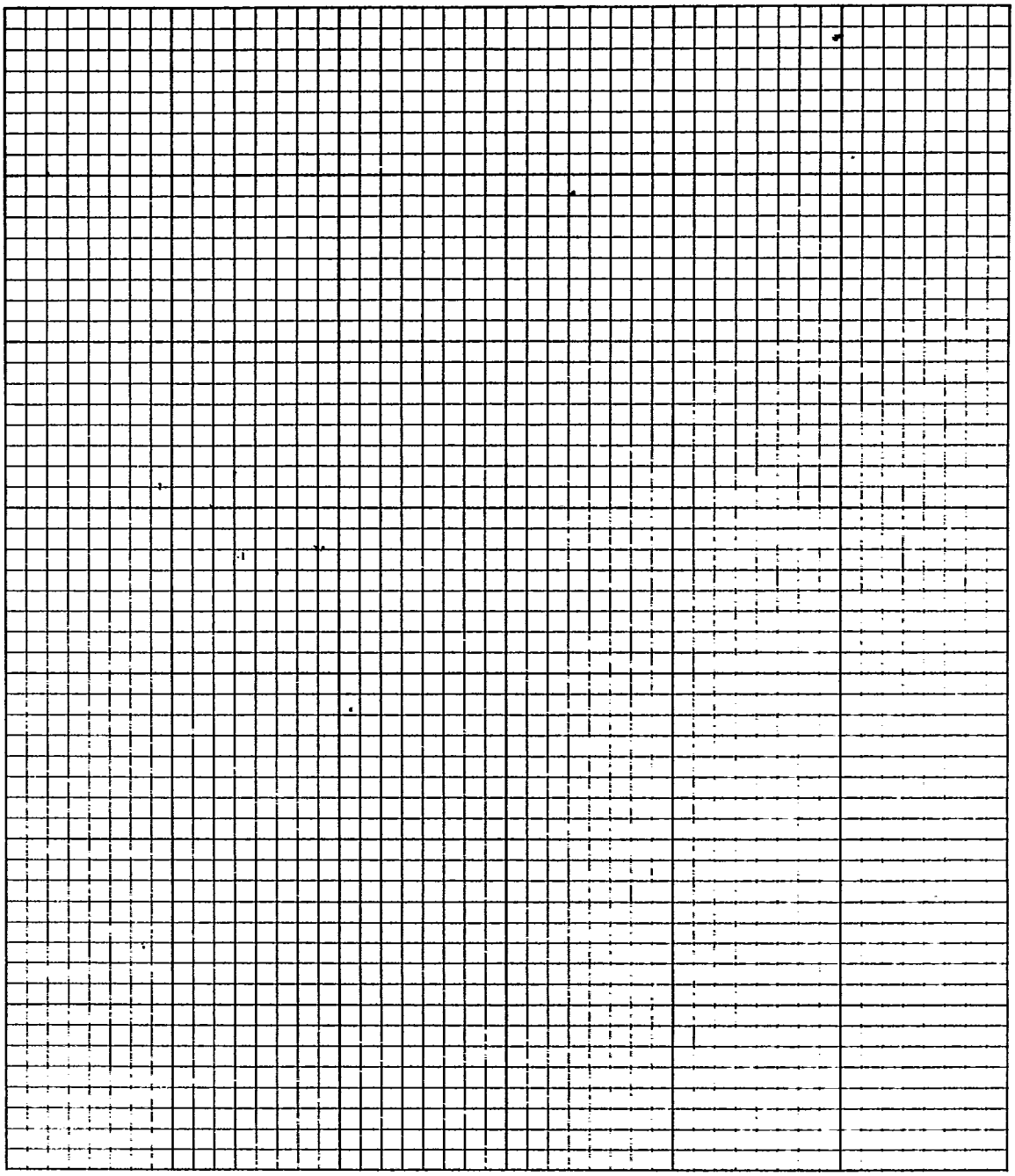

ESTIMATED ANNUAL HEATING COST

TOTAL HEAT LOSS = ( ) Watts

ESTIMATED ANNUAL KWHR USE = $\frac{(\quad) \text{ kW Loss X } (\quad) \text{ Degree Days X } (\quad) C^*}{TD}$ = ( ) kWhr/yr

ESTIMATED ANNUAL HEATING COST = ( ) kWhr/yr X ( ) Cost/kWhr/yr = $ per year

*C factor of 17 is conservative; contact power supplier for local recommendations.

Copyright National Electrical Manufacturers Association
Provided by IHS under license with NEMA
No reproduction or networking permitted without license from IHS
Not for Resale

Part 4
ESTIMATING ANNUAL HEATING KILOWATT-HOUR CONSUMPTION

4.1 Formula

The following formula can be utilized for estimating the annual kilowatthour (kwhr) consumption:

$$\text{Annual kwhr consumption} = \frac{HL \times DD \times C}{DTD} \quad \text{(Equation 4)}$$

Where—

C = experience factor (see par. 4.2).
HL = heat loss of building in kilowatts.
DD = total annual degree days for area (consult local power supplier or weather bureau).
DTD = difference between inside and outside design temperatures, degrees F.

4.2 Experience Factor (C)

The value of the experience factor (C) to be used in Equation 4 is normally secured from the local power supplier. The power supplier determines the appropriate value from experience and judgment. Individual applications may be expected to deviate somewhat from the recommended value because of a number of variables on each installation which may affect the factor actually experienced. Some of these variables are:

a. Living habits of the occupants:
   (1) How frequently the outside doors are opened.
   (2) How many people live in the house and how much they use various appliances will affect the internal heat gains.
   (3) What inside temperature is maintained. This may vary from 65°F to 77°F or wider.
   (4) Whether occupants are away for extended periods with heat turned down.
   (5) Whether heat is turned off in rooms not in use.
b. Orientation and design of the particular house. Heat loss is affected by wind exposures. Solar heat gain is affected by roof overhang, shading from trees, hills, and surroundings.
c. Actual weather conditions may vary considerably from year to year compared to the average used in estimates.
d. The performance of insulation and the effectiveness of weather-stripping and calking is affected by workmanship and sometimes by deterioration.
e. The type of equipment chosen for the particular application.

It is impractical to take all variables into account in estimating energy consumption. Local averages provide a good index to anticipated usage. One or two percent run over 10 percent high and about five percent run 15 percent lower than averages for a locality.

Areas without local experience should note that experience with hundreds of thousands of installations has shown a conservative figure of 17 for C when three-quarters of an air change per hour is figured for infiltration and exhaust, and 15 when half an air change per hour is figured.

The local power supplier should be consulted for the recommended value of C. In comparing results of actual applications to determine the C factor experienced, care should be taken that the same infiltration rate is used for calculating the heat loss in all cases.

Copyright National Electrical Manufacturers Association
Provided by IHS under license with NEMA
No reproduction or networking permitted without license from IHS
Not for Resale

Part 5
HOW TO DETERMINE HEAT GAINS

5.1 Heat Gains Versus Heat Losses

The discussion in Part 3 regarding the transmission losses and infiltration losses is applicable to heat gains but with the heat flowing from the outdoors to the building instead of from the building to the outdoors. Three significant complications are added:

a. Moisture or "latent heat" loads are a very important part of the consideration with regard to magnitude of load, comfort effects, and the equipment required to remove latent heat compared to dry or "sensible heat" as the latent percentage rises.
b. Accurate calculation of sun load through both transparent (windows and skylights) and opaque (walls and roofs) building sections is necessary.
c. Consideration of internal sources of heat is essential, particularly if substantial in size.

In heating loads, the moisture or latent aspects are usually disregarded unless substantial outdoor air beyond the quantity normally infiltrated is pumped into or out of the building. Adding moisture to maintain higher relative humidity is not normally required in electrically heated buildings without mechanical ventilation. And since both sun effects and internal loads, when present, work with the heating system, the heating system capacity required is less than when these factors are absent. But since heat may be required when neither is present, heating capacity should be provided to operate without these factors. However, in cooling, the sun effects and internal loads add heat to the building in which the system is already required to remove heat and, to the extent that these factors increase the load at the time of peak, capacity to remove sun effects and internal load should be provided.

Because of the relatively high cost of cooling systems (compared to most heating systems), more general recognition has been given to peak shaving effects of thermal storage in the building and contents during the cooling season than in the heating season. Because of the interaction of latent and sensible heat effects on the condition of the air and on the comfort of people, a modest "swing" of temperature above the thermostat set point during peak load conditions in the cooling season is seldom, if ever, noticed by the occupants in comfort-conditioned spaces. Authorities do not agree on the maximum acceptable swing, but 3 °F is viewed as a practical minimum (4-1/2 °F and 6 °F have been responsibly recommended).

Further discussion of heat gains may be found in the *ASHRAE Handbook, 1985 Fundamentals Volume*, Chapter 26, pages 26.1–26.42.

5.2 Types of Heat Gains

In determining the cooling load of a structure, there are five types of heat gain to be considered:

a. Heat gains from direct sunlight (solar heat gain).
b. Gains due to transmission of heat through the various building sections, such as walls, windows, doors, ceilings, and floors.
c. Heat gained by the flow of air through the structure due to operation of ventilating fans or to infiltration of air through cracks at openings in the structure.
d. Lights, people, appliances, and other internal sources of heat which contribute to the cooling load.
e. Latent heat or heat caused by the addition of moisture to the conditioned space by devices or from persons inside, and from infiltration of moisture-laden outside air.

5.3 Solar Heat Gain

When direct sunlight reaches transparent building sections, such as windows, part of the radiant energy incident on such surfaces is reflected, part is transmitted through as radiant energy, and part is transformed into heat on and between the inside and outside surfaces of the transparent section.

Outside shading devices such as awnings, venetian blinds, roof overhang or suncreens of various configurations may remove all or part of the transparent section from direct sunlight. Inside shading devices such as venetian blinds, drapes and roller shades may reflect a substantial portion of the radiant energy back out through the transparent section.

Radiant energy which is transmitted through the section and is not reflected becomes heat when absorbed by solids (such as the floor, furniture, walls, etc.). Some of this heat may warm the air adjacent to those surfaces by convection at once; some heat may flow into the material beyond the surfaces to be conducted from the conditioned space through various heat paths, or, more likely, to be transferred to the air in the conditioned space by convection later. Determining the time intervals between absorption of solar energy and its appearance as cooling load in the conditioned area is quite complex.

Sunlight incident upon opaque sections (such as walls and roofs) is partly reflected and par-

Copyright National Electrical Manufacturers Association
Provided by IHS under license with NEMA
No reproduction or networking permitted without license from IHS
Not for Resale

tially absorbed. The absorbed energy raises the temperature of the surface so heat flows into the building faster. Often the glass temperature exceeds the outdoor temperature, and heat is transferred from the sunlit outdoor surface into the outdoor air by convection. The rate of heat energy flow into the building is reduced by thermal resistance encountered in the section, and heat flow is delayed in reaching the indoors by heat storage into the mass of the building section materials through which it passes. The time lag between solar energy becoming heat at the outdoor surface and cooling load in the indoor air may range from about 3 hours to 8 or more hours, depending on the nature of the materials.

Similarly, there is a time lag between a change in outdoor temperature and the result of the new difference in temperature between indoors and outdoors affecting the cooling load. So the determination of the effect (both time lag and magnitude) of solar radiation on the cooling load is quite complex for opaque as well as for transparent sunlit building sections.

Multiplying factors are provided on Form 5. Selection of the appropriate factor involves consideration of the direction faced, and the nature of outdoor and indoor shading used (if any). Coupled with the other elements of cooling load calculated using Form 5, this provides adequate consideration of sun effect contribution to the peak heat extraction required for cooling due to solar energy incident upon opaque as well as transparent surfaces.

Further discussion of solar effects will be found in the *ASHRAE Handbook, 1985 Fundamentals Volume*, Chapter 26, pages 26.1–26.42.

5.4 Transmission Heat Gains

a. After determining the total installed resistance as indicated in Part 3 par. 3.2.1, item d, the section transmission gain is determined by dividing the cooling TD by the RT. The quotient is the multiplier which gives the transmission gain for that section when multiplied by the area of the section. Often multipliers for alternate thermal construction are determined for comparison of resulting loads.

b. An alternative method of determining transmission heat gain utilizes the building transmission "loss" per degree F as described in Part 3, par. 3.2.2, item e. The transmission "loss" per degree F of a building section multiplied by the cooling design temperature difference for that section gives the section heat gain.

5.5 Infiltration (and Ventilation) Heat Gains

A rate of one quarter air change per hour is suggested for average construction of buildings built to the "Thermal Performance Recommendations" given in Part 2 par. 2.7.

TABLE 5-1
MULTIPLYING FACTOR FOR SENSIBLE INFILTRATION LOAD

Outdoor Design Designation*	Design Temperature Difference, °F	Multiplying Factor for Volume, Air Changes per Hour $^1_4$	$^1_2$
80 L and M	5	0.0229	0.0344
85 L and M	10	0.0458	0.0687
90 M	15	0.0687	0.1031
95 M and H	20	0.0916	0.1374
100 M and H	25	0.1145	0.1718
105 H	30	0.1375	0.2063

*Daily temperature range classification:
L (low)—less than 15 degrees
M (medium)—15 to 25 degrees
H (high)—over 25 degrees

Table 5-1 gives factors for multiplying the volume of the structure to determine the sensible heat gain in Btuh for the various tabulated cooling design temperature differences.

Ventilation (whether by exhaust or supply) can be determined by utilizing the following formula:

$$\text{Btuh Cooling Load} = 1.1 \times \text{cfm} \times \text{TD} \quad \text{(Equation 5)}$$

Where—

cfm = air supplied or exhausted.
TD = difference in temperature between indoor and outdoor dry bulb temperature.

The cfm supplied or exhausted from a power ventilating system is the rated capacity of the air moving device against the static pressure experienced in the installation. There is no satisfactory rational basis for determining the cfm of a natural ventilation system.

When the ventilation load is twice the infiltration load, or more, the infiltration load should be disregarded and only the ventilation load added as part of the cooling load. When the ventilation load is less than twice the infiltration load, all the ventilation load plus one-half the difference between twice the infiltration and the ventilation cfm is the amount of air change contributing to the load. This is expressed in the following formula for determining the effective ventilation quantity:

$$\text{Effective Ventilation, cfm} = V + 1/2\,(2I - V) \quad \text{(Equation 6)}$$

Where—

V = ventilation air, cfm
I = infiltration rate, cfm (determined as discussed in Appendix E, par. E.2).

Copyright National Electrical Manufacturers Association
Provided by IHS under license with NEMA
No reproduction or networking permitted without license from IHS
Not for Resale

Table 5-2

RATES OF HEAT GAIN FROM OCCUPANTS OF CONDITIONED SPACES*

Degree of Activity	Typical Application	Total Heat Adults, Male, Btuh	Total Heat Adjusted, Btuh†	Sensible Heat, Btuh	Latent Heat, Btuh
Seated at rest	Movie Theater	400	350	210	140
Seated, very light work	Offices, hotels, apartments	480	420	230	190
Moderately active office work	Offices, hotels, apartments	640	510	255	255
Standing, light work; or walking slowly	Department store, retail store, bank	800	640	315	325
Sedentary work	Restaurant‡	520	580	255	325
Light bench work	Factory	880	780	345	435
Moderate dancing	Dance hall	1360	1280	405	875
Walking 3 mph; moderately heavy work	Factory	1040	1040	345	695
Bowling#	Bowling alley	1200	960	345	615
Heavy work	Factory	1600	1600	565	1035

*Tabulated values are based on 78°F room dry-bulb temperature. For 80°F room dry-bulb, the total heat remains the same, but the sensible heat values should be decreased by approximately 8 percent, and the latent heat values increased accordingly.
†Adjusted total heat gain is based on normal percentage of men, women, and children for the application listed, with the postulate that the gain from an adult female is 85 percent of that for an adult male, and that the gain from a child is 75 percent of that for an adult male.
‡Adjusted total heat value for *sedentary work, restaurant,* includes 60 Btuh for food per individual (30 Btu sensible and 30 Btu latent).
#For *bowling,* figure one person per alley actually bowling, and all others as sitting (400 Btuh) or standing and walking slowly (790 Btuh).

5.6 Internal Heat Gains

People and devices which give off heat in the conditioned space are sources of internal heat gains since those gains contribute to the cooling load. For the residence where the peak cooling load will occur between 5 and 6 P.M. daylight time*, internal loads in continuous use during those hours (or the average of intermittently used active internal loads between 5 and 6 P.M.) should be added to the cooling load. A nominal value of 1200 Btuh sensible and 360 Btuh latent heat load is often used for residence kitchen appliance heat gain. Tables 5-2 and 5-3 list the sizes of a number of internal load sources.

5.7 Latent Heat Gains

Those cooling loads which have latent (moisture) loads as well as sensible (dry) loads should have the latent loads added separately from the sensible loads. When latent loads become a substantial part of the total, they may influence the basic design criteria for system components. So long as the sensible portion of the load is over 85 percent of the total, significant complications are not normally expected. When the sensible portion is between 75 and 85 percent, significant complications are not likely, but consideration of the moisture load capability of the system proposed is recommended, especially for sensible loads under 80 percent. For sensible loads under 75 percent, the latent heat removal capability of the system should be carefully considered and may become the predominant system design limitation for sensible loads under 70 percent.

The latent as well as the sensible components of common sources of internal load are tabulated in Tables 5-2 and 5-3. Table 5-4 gives the values to be multiplied by the volume of the structure to determine the latent load due to infiltration for the outdoor design conditions tabulated.

The values to be multiplied by the ventilation (or ventilation plus infiltration) cfm are given in Table 5-5. The product of that multiplication is the latent ventilation load.

Where latent loads are given by the amount of water vaporized per time period, the latent load can be determined by the formula:

$$\text{Btuh} = 1094 \times \text{pounds of water evaporated/hour} \qquad \text{(Equation 7)}$$

*Most tabular data on sun loads in reference works are based on sun time, which is an hour earlier.

Copyright National Electrical Manufacturers Association
Provided by IHS under license with NEMA
No reproduction or networking permitted without license from IHS
Not for Resale

Table 5-3
RATE OF HEAT GAIN FROM MISCELLANEOUS COMMERCIAL APPLIANCES‡

	Manufacturer's Rating		Recommended Rate of Heat Gain, Btuh			
	Watts	Btuh	Sensible	Latent	Total	Sensible, With Hood †
A. Electrical Appliances						
Hair Dryer						
Blower type	1580	5400	2300	400	2700	
Helmet type	705	2400	1870	330	2200	
Permanent wave machine—						
60 heaters @ 25 watts,						
36 heaters in normal use	1500	5000	850	150	1000	
Neon sign, per linear foot of tube,						
1/2 inch diameter	...	...	30	...	30	
3/8 inch diameter	...	...	60	...	60	
Sterilizer, instrument	1100	3750	650	1200	1850	
Coffee brewer	785	2675	1000	300	1300	430
Coffee urn	3000	10200	3850	1250	5100	1600
Deep fat fryer	8000	27300	4100	9600	13700	4300
Dry food warmer, per sq ft of top	240	820	320	80	400	130
Roll warmer	1650	5620	2600	200	2800	900
Toaster, 4 slice	2540	8350	2230	1970	4200	1300
Oven, roasting, per sq ft of hearth	900	3070	*	*	*	490
Range, medium duty top section	8000	27300	*	*	*	4300
Oven	3600	12300	*	*	*	1900
B. Gas-burning Appliances						
Broiler-griddle		36000	11700	6300	18000	3600
Griddle frying, per sq ft of top		15000	4900	2600	7500	1500
Coffee brewer	...	5500	1750	750	2500	500
Coffee urn, 5 gallon	...	15000	5250	2250	7500	1500
Deep fat fryer	...	30000	7500	7500	15000	3000
Dry food warmer, per sq ft of top	...	1400	560	140	700	140
Range, restaurant type						
Per two burners	...	24000	*	*	*	2400
Per oven	...	30000	*	*	*	3000

‡Heat gain from cooking appliances located in the conditioned area (but not included in the table) should be estimated as follows:

1. Obtain probable maximum hourly input by multiplying the manufacturer's hourly input rating by the usage factor of 0.50.
2. If appliances are installed without an exhaust hood, the estimated latent heat gain is 34 percent of the probable maximum hourly input, and the sensible heat gain is 66 percent.
3. If appliances are installed under an effective hood, the estimated heat gain is all sensible heat.

*Hood required.

†For poorly designed or undersized exhaust systems, the heat gains in this column should be doubled and half the increase assumed as latent heat.

Table 5-4
LATENT INFILTRATION LOAD

Outdoor Design Designation*	Multiply Volume by the Following Factor Air Changes per Hour ¼	½
80 L	0.1230	0.1845
80 M	0.0867	0.1300
85 L	0.1129	0.1693
85 M	0.0826	0.1239
90 M	0.1411	0.2116
95 M	0.1734	0.2601
95 H	0.0484	0.0726
100 M	0.1694	0.2541
100 H	0.0262	0.0393
105 H	0.0363	0.0544

*See Appendix C, par. C.1.

Table 5-5
LATENT VENTILATION LOAD

Outdoor Design Designation*	Multiply Ventilation Cfm by the Following Factor
80 L	29.52
80 M	20.81
85 L	27.10
85 M	19.84
90 M	33.88
95 M	41.62
95 H	11.62
100 M	40.65
100 H	6.29
105 H	8.71

*See Appendix C, par. C.1.

Copyright National Electrical Manufacturers Association
Provided by IHS under license with NEMA
No reproduction or networking permitted without license from IHS
Not for Resale

5.8 Cooling Load Calculation Form

A sample form for the calculation of cooling load is shown as Form 5 under the title "Heat Gain and Heat Loss Calculation." Spaces are provided for two variations of wall, ceiling, and floor constructions. A set of columns for a revised calculation is provided for checking the result of adding additional insulation to a building section to secure a more favorable match of cooling load and equipment size available. A column is provided for heating load calculation.

5.9 Example Problem

The example is the same as that shown in Part 3, par. 3.5 and Fig. 2–5. The solution is shown in Forms 5a, 5b, and 6.

5.10 Room-by-room Distribution of Heat Gains

The distribution of cooling load is accomplished in the same manner as the distribution of the heating load (see Part 3, par. 3.6).

Copyright National Electrical Manufacturers Association
Provided by IHS under license with NEMA
No reproduction or networking permitted without license from IHS
Not for Resale

NEMA

FORM 5a—HEAT GAIN AND HEAT LOSS CALCULATION (AREA METHOD)

SENSIBLE LOAD

1. Solar Heat Gain. (Use all applicable exposures. Add loads together.)

Windows Facing Toward	No Shading	Inside Shading and Overhang Of 0′	1′	2′	3′	4′	Outside Shading	Window & Door, Glass Area, Sq. Ft.	Cooling Load, Btuh*
(N)	15	(8)	5	2	0	0	0	106	848
NE	30	15	15	14	12	10	0		
(E)	50	(25)	25	23	20	15	0	30	750
SE	50	30	25	18	2	0	0		
(S)	25	(15)	10	4	0	0	0	34	1410
SW	80	40	30	24	10	0	5		
(W)	95	(50)	50	45	35	30	8	24	1200
NW	60	30	30	25	22	20	7		

*Multiply solar cooling load by 0.8 for regular double glass, and by 0.6 for heat absorbing double glass.

(4208) Btuh X (.08)

2. Transmission Loads — 3366

Exposure	Design TD Summer	Design TD Winter	Area—Length, Volume or Other	RT	Area / RT	Cool TD / RT or Other Factor	Cooling Load, Btuh or Watts	Area / RT or Other Factor	Heating Load, Btuh or Watts
Gross Wall #1			1248						
Glass #1	17	70	254	1.45	175.2		2978		12262
Doors #1	17	70	20	2.00	10.0		170		700
Net Wall #1	17	70	974	22	44.2		753		3099
Gross Wall #2									
Glass #2									
Doors #2									
Net Wall #2									
Ceiling #1	17	70	1233	34			617		2538
Ceiling #2									
Floor #1	17	70	1153	21			933		3843
Floor #2									
Slab Floors (perimeter)	17	70	26	5.0			—		607

3. Loads Due to Air Changes

Infiltration .0044/.0088	17	70	9864			.0748	738	.616	6076
Ventilation									
									29125

4. Internal Loads

People, Avg. No. 6		6		250	1500
Lights & Appliances		NOMINAL		1200	1200
Other					
TOTAL SENSIBLE LOAD					12255

LATENT LOAD

5. Latent Heat Gains

Infiltration		9864			
Ventilation					
People, Avg. No. MOD. ACTIVE		6		200	1200
Appliances		NOMINAL		360	360
Other					
TOTAL SYSTEM LOAD (NET TO CONDITIONED SPACE) ____ **Tons**				**Cooling**	13815

Heating 29125

Copyright National Electrical Manufacturers Association
Provided by IHS under license with NEMA
No reproduction or networking permitted without license from IHS
Not for Resale

NEMA

FORM 5b—HEAT GAIN AND HEAT LOSS CALCULATION (TEMPERATURE DIFFERENCE METHOD)

SENSIBLE LOAD

1. Solar Heat Gain. (Use all applicable exposures. Add loads together.)

Windows Facing Toward	No Shading	Inside Shading and Overhang Of 0′	1′	2′	3′	4′	Outside Shading	Window & Door, Glass Area, Sq. Ft.	Cooling Load, Btuh*
(N)	15	(8)	5	2	0	0	0	106	848
NE	30	15	15	14	12	10	0		
(E)	50	(25)	25	23	20	15	0	30	750
SE	50	30	25	18	2	0	0		
(S)	25	(15)	10	4	0	0	0	94	1410
SW	80	40	30	24	10	0	5		
(W)	95	(50)	50	45	35	30	8	24	1200
NW	60	30	30	25	22	20	7		

*Multiply solar cooling load by 0.8 for regular double glass, and by 0.6 for heat absorbing double glass.

(4208) Btuh X (0.8

2. Transmission Loads

3366

Exposure	Design TD Summer	Design TD Winter	Area—Length, Volume or Other	RT	Area / RT	Cool TD / RT or Other Factor	Cooling Load, Btuh or Watts	Area / RT or Other Factor	Heating Load, Btuh or Watts
Gross Wall #1			1248						
Glass #1	17	70	254	1.45		11.7	2972	48.27	12262
Doors #1	17	70	20	2.00		8.5	170	35.0	700
Net Wall #1	17	70	974	22		.77	750	3.18	3099
Gross Wall #2									
Glass #2									
Doors #2									
Net Wall #2									
Ceiling #1	17	70	1233	34		.5	617	2.06	2539
Ceiling #2									
Floor #1	17	70	1153	21		.8	933	3.33	3843
Floor #2									
Slab Floors (perimeter)	17	70	26	5.0		23.33	—		607

3. Loads Due to Air Changes

Infiltration .0044/.0088	17	70	9864			.0748	738	.616	6076
Ventilation									
									29126

4. Internal Loads

People, Avg. No. 6		6		250	1500
Lights & Appliances		NOMINAL		1200	1200
Other					
TOTAL SENSIBLE LOAD					12246

LATENT LOAD

5. Latent Heat Gains

Infiltration		9864			
Ventilation					
People, Avg. No. MOD. ACTIVE		6		200	1200
Appliances		NOMINAL		360	360
Other					

TOTAL SYSTEM LOAD (NET TO CONDITIONED SPACE) _____ **Tons** **Cooling** 13,806 **Heating** 29126

Copyright National Electrical Manufacturers Association
Provided by IHS under license with NEMA
No reproduction or networking permitted without license from IHS
Not for Resale

NEMA

FORM 6—ROOM-BY-ROOM DISTRIBUTION OF HEAT GAIN

NAME: _____ LOCATION: _____ DATE: _____ TELEPHONE: _____

CONSTRUCTION: New: ✓ Conversion: Stories: 1 Basement Use: NONE DESIGN TEMP: 70 °F Inside; 0 °F Outside; 70 °TD;

INSULATION: Walls: R-19 Ceilings: R-33 Floors: R-19 Doors: FILLED METAL Windows: DOUBLE-GLAZED

FLOOR AREA OF CONDITIONED AREA, SQ. FT. BTUH HEAT GAIN:

The figures quoted herein are estimates *only* and shall not constitute a guarantee.

1		2	3	4 (2 & 3)	5	6	7	8	9
Name of Room	Size of Room	Wall, Linear Feet	Windows and Doors, Adjusted Sq. Ft.	Equivalent Wall, Linear Feet	Fraction of Equivalent Wall, Linear Feet	Required Cooling Capacity, Btuh	Cooling Units	Room Air, Cfm	Installed Cooling Capacity, Btuh
DEN	8x10	26	39	65	15.1	4392			
DINING	10x9	10	47	57	13.2	3843			
KITCHEN	12x9	12	10	22	5.1	1483			
BATH	9x6	9	10	19	4.4	1279			
BDRM #2	12x13	25	39	64	14.9	4338			
BDRM #1 + LAV.	13x14	33	45	78	18.1	5265			
BDRM #3	11x14	11	24	35	8.1	2360			
L.R.	13x18	31	60	91	21.1	6138			
TOTALS		157	274	431	100.0	29098			

TOTAL HEAT GAIN = ( ) Btuh or ( ) Tons

Copyright National Electrical Manufacturers Association
Provided by IHS under license with NEMA
No reproduction or networking permitted without license from IHS
Not for Resale

APPENDICES

Parts 2, 3 and 4 of this manual presented procedures for determining heat losses of walls based on the installed resistance of the insulation (R-) used in the wall. Values were given for similarly determining the heat losses of other exposed sections. All procedures were based on insulation levels approximately as recommended in the "Thermal Performance Recommendations" (see Part 2).

The appendices provide procedures for more exact determination of heat losses in any construction and should be used whenever the insulation used is materially below HUD requirements for one- and two-family dwellings or materially above that recommended in the "Thermal Performance Recommendations" given in Part 2, par. 2.7.

Appendix A
TRANSMISSION LOSSES

The *ASHRAE Handbook, 1985 Fundamentals Volume* of the ASHRAE Handbook Series should be consulted for a comprehensive discussion of the principles of heat transfer (Chapter 3 in the 1985 edition) and other applicable subjects such as:

1. Thermal insulation and water vapor retarders (Chapter 20).
2. Infiltration and ventilation (Chapter 22).
3. Design heat transmission coefficients (Chapter 23).

This preamble is presented to call attention to the complexity of some construction methods and the difficulty of calculating their transmission losses. When metal layers are included in the section construction and especially when internal metallic structure is bonded on one or both sides to a metal skin, special problems of lateral heat flow complicate the calculation. A reliable guarded hot box test of transmission values is recommended in such cases. Where tests are impractical, calculation by procedures given in the ASHRAE Handbook should be carefully made. Most constructions are adequately handled by the procedures which follow, beginning with Appendix B.

Building heat transmission losses have been determined, based on the steady-state overall coefficient of heat transfer. Heat transfer through building or insulating materials can take place by conduction, convection, or radiation. Ordinarily, all three are involved, with one or two predominating. The solution to problems is much simpler if the concept of thermal circuit and thermal resistance is employed in connection with the overall coefficient of heat transfer. The overall coefficient of heat transfer (or thermal transmittance), frequently called the U value, may be determined by test or may be computed from known values of the thermal conductance of the various components.

By definition: $U = 1/RT$ (Equation 2, page 9)

For a wall with air space construction and consisting of two homogeneous materials of conductivities k_1 and k_2, thickness of x_1 and x_2 respectively, separated by an air space of conductance a, and with surface air film coefficients of f_i, and f_o:

$$RT = \frac{1}{f_i} + \frac{x_1}{k_1} + \frac{1}{a} + \frac{x_2}{k_2} + \frac{1}{f_o}$$

(Equation 8)

In many practical installations, components of the building section are arranged so that parallel heat flow paths of different conductances result. If there is no lateral heat flow between paths, each path may be considered to extend from inside to outside, and the U value may be calculated using Equations 2 and 8. The average U value is then:

$$U_{av} = a\,(U_a) + b\,(U_b) + \ldots + n\,(U_n)$$

(Equation 9)

where a, b...n are respective fractions of a typical basic area composed of several different paths whose U values are U_a, U_b...U_n.

If heat can flow laterally in any continuous layer so that isothermal planes result, the total average resistance R_{Tav} will be the sum of the resistance of the layers between such planes, each layer being calculated by Equation 8

Copyright National Electrical Manufacturers Association
Provided by IHS under license with NEMA
No reproduction or networking permitted without license from IHS
Not for Resale

using the resistance values. This is a series combination of layers of which one or more provide parallel paths.

The calculated U value, assuming parallel heat flow only, is considerably lower than that calculated with the assumption of combined series-parallel heat flow. The actual U value will be some value between the two calculated values. If the construction contains any highly conducting layer in which lateral conduction is very high compared to the transmittance through the section, a value closer to the series-parallel calculation should generally be used. If there is no layer of high lateral conductance, a value closer to the parallel heat flow calculation should generally be used.

Appendix B
HOW TO DETERMINE RESISTANCE OF SECTION

B.1 Resistances (R) of Building Materials, Films, and Spaces

Tables B-1 and B-2 give the resistance (R) per inch of thickness for homogeneous materials, or for the thickness listed for nonhomogeneous materials, air films, and air spaces. Adding all R resistances for each layer making up the section provides the total resistance (RT) of the building section.

B.2 Disregarding Framing

The great majority of building sections are not complicated by significant parallel paths and lateral layers of highly conductive material. The total resistance for such sections may be determined by adding the resistances of the various materials through which the heat must pass in going from inside to outside. A sketch (such as Fig. 2-2) may be helpful in visualizing these materials. Then a list of the materials should be made, appropriate values of resistance applied to each (see Tables B-1 and B-2), and the sum of resistances determined. For example, if a wall consisting of 8-inch lightweight aggregate concrete block and face brick with 1-1/2 inch cavity between, filled with expanded vermiculite insulation, is to be used with paint on the block as the inside surface, the resistances would be:

Inside air film (f_i)	0.68
8-inch lightweight block, two rectangular cores, 24 pounds	2.18
1-1/2 inch expanded vermiculite (at 2.13/inch)	3.19
Face brick (at 0.11 per inch)	0.44
Outside air film (f_o)	0.17
Total Resistance (RT)	6.66

If the cores of the block were filled with insulation too, Table B-2 indicates a resistance of 5.03, or 2.85 higher than that used above for unfilled block. This would bring the total resistance to 9.51 (hr) (ft^2) (°F)/Btu which are units of resistance.

For another example, if corrugated aluminum sheet on steel Z-bars were to be used for a wall with no inside surfacing materials, the resistances would be:

Inside air film (f_i)	0.68
Corrugated aluminum (1/16 inch, k = 118)	0.00053
Outside air film (f_o)	0.17
Total Resistance (RT)	0.85053

It can be seen that the resistance of corrugated metal sheets can be disregarded in calculations.

B.3 Correction for Framing

a. *Thermal Resistance Method*—Insulated building sections usually have the spaces between inside and outside surfacing materials and structural supports partially or completely filled with insulation. Actually, there are parallel paths for heat flow between the surfacing materials. They are (a) through the insulation (and air spaces, if any) and (b) through the structural framing materials.

In frame construction, the structural framing usually consists of nominal 2-inch by 4-inch lumber. For a wall with 16-inch stud spacing, there are 1-5/8-inch-wide face studs from floor to ceiling each 16 inches of wall length; there is a similar 1-5/8-inch-wide face of sole plate extending along the length at the bottom, a 1-5/8-inch-wide face of fire block between studs, and two 1-5/8-inch-wide faces in the top plate (one 2-inch by 4-inch on top of the other). Where windows or doors occur, there is additional framing, usually involving a double lintel, double studs and perhaps a double sill, but omitting, of course, studs in the space occupied by the window or door.

Copyright National Electrical Manufacturers Association
Provided by IHS under license with NEMA
No reproduction or networking permitted without license from IHS
Not for Resale

If a sketch is made of the framing involved, the area covered by the structural members can be determined, and the heat loss per degree F for that part of the section determined. The heat losses for the windows and doors are similarly determined separately. For the balance of the section, heat flows through the insulation.

For example, for a wall (with no windows or doors) 12 feet long and 8 feet high, with 2-inch by 4-inch framing on 16-inch centers, a total of about 122.6 linear feet of 1-5/8-inch wide face is occupied by the framing. Consequently, an area of about 16.7 square feet of framing and 79.3 square feet of insulation make up the total area of 96 square feet.

Disregarding framing, the section heat loss per degree F (with R-11 insulation or RT 14) would be 6.85 Btuh per degree F. But with fir framing lumber (R-4.55 or RT 7.55), the framing contributes 16.7/7.55 or 2.22 Btuh per degree F, while the insulated portion contributes 79.3/14 or 5.65 Btuh per degree F to make a total of 7.87 Btuh per degree F. The correction for framing adds 1.02 Btuh per degree F (or almost 15 percent) to the load for this section. If windows and doors were involved, the framing would be a larger percentage of the area, and the addition for correction for framing would be greater.

b. ***ASHRAE Handbook Method***— The *ASHRAE Handbook, 1985 Fundamentals Volume,* recommends that the correction for framing be made using Figure B-1 after the final U_i and U_s values have been obtained for a given construction.

Using the same wall as in the example in par. B.3a, the framing occupies 17.5 percent of the total area; so S = 17.5 percent. U_i is 1/14 or 0.071 and U_s is 1/7.55 or 0.13; therefore, U_s/U_i is 0.13/0.071 or 1.83. From the chart, U_{av}/U_i is about 1.15, indicating the correction for framing adds about 15 percent to the load for this section.

CORRECTION FOR FRAMING

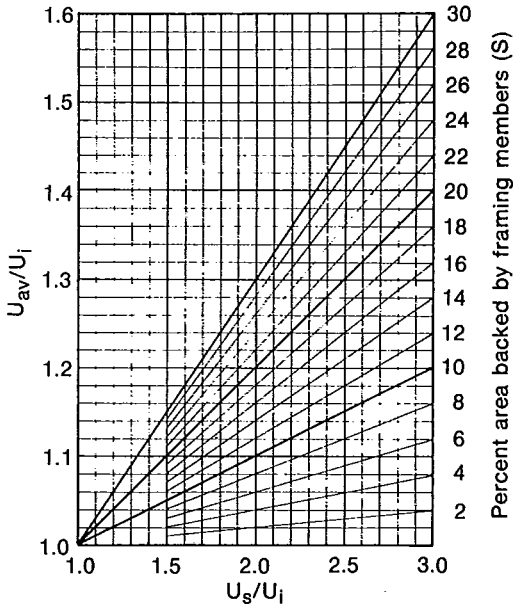

U_{av} = average U-value for building section
U_i = U-value for insulated area between framing members
U_s = U-value for area backed by framing members

Fig. B-1

c. ***Conclusion***—In view of other gross errors in heating theory, the common practice of disregarding the correction for framing and making an overall adjustment of results by the C-factor is justified. Since the better insulated building performs still better than theory predicts (even after reduction of calculated load for such insulation), the improved performance offsets the error due to neglecting the framing correction. That is, both the heat loss and C factor actually experienced remain more nearly those calculated than if the framing correction were made.

Copyright National Electrical Manufacturers Association
Provided by IHS under license with NEMA
No reproduction or networking permitted without license from IHS
Not for Resale

Table B-1
RESISTANCE (R) OF AIR FILMS AND AIR SPACES

A. AIR FILMS

Position of Surface	Direction of Heat Flow	Air Speed	Resistance (R) Surface Adjacent to Air Film*		
			Untreated (Surface Emissivity 0.90)	Reflective (Surface Emissivity 0.20)	Polished (Surface Emissivity 0.05)
Horizontal	upward	still	0.61	1.10	1.32
Sloping 45°	upward	still	0.62	1.14	1.37
Vertical	horizontal	still	0.68	1.35	1.70
Sloping 45°	downward	still	0.76	1.67	2.22
Horizontal	downward	still	0.92	2.70	4.55
Any (Summer)	any	7.5 mph	0.25	...	...
Any (Winter)	any	15 mph	0.17	...	...

B. AIR SPACES

Position of Surface	Direction of Heat Flow	Resistance (R) Surfaces Facing Air Space*†		
		Both Untreated (Surface Emissivity 0.82)	One Untreated, One Reflective (Surface Emissivity 0.20)	Both Reflective (Surface Emissivity 0.05)
1. Air Spaces ¾ Inch Thick				
Horizontal (ceiling)	up (winter)	0.78	1.37	1.67
	down (summer)	0.84	2.08	3.25
Sloping 45° (ceiling)	up (winter)	0.83	1.54	1.95
	down (summer)	0.84	2.09	3.24
Vertical (wall)	horizontal (winter)	0.96	2.04	2.80
	horizontal (summer)	0.84	2.10	3.28
Horizontal (floor)	down (winter)	1.02	2.39	3.55
	up (summer)	0.76	1.63	2.26
2. Air Spaces 4 Inches Thick				
Horizontal (ceiling)	up (winter)	0.85	1.62	2.06
	down (summer)	0.99	3.38	8.08
Sloping 45° (ceiling)	up (winter)	0.88	1.71	2.22
	down (summer)	1.02	2.33	3.39
Vertical (wall)	horizontal (winter)	0.94	1.94	2.62
	horizontal (summer)	0.91	2.16	3.44
Horizontal (floor)	down (winter)	1.23	4.02	8.94
	up (summer)	0.80	1.87	2.75

*More definitive detail on surface emissivity will be found in the *ASHRAE Handbook, 1985 Fundamentals Volume*, Chapter 23, Table 1.
†More detailed values of R will be found in the *ASHRAE Handbook, 1985 Fundamentals Volume*, Chapter 23, Table 2A, Pages 4 and 5.
NOTE—All summer values are for a mean of 90°F; winter values are for a mean of 50°F.

Copyright National Electrical Manufacturers Association
Provided by IHS under license with NEMA
No reproduction or networking permitted without license from IHS
Not for Resale

Table B-2

RESISTANCES OF BUILDING AND INSULATING MATERIALS—DESIGN VALUES[a]

Material	Description	Density (Lb per Cu Ft)	Mean Temp F	Resistance[b] (R) Per inch thickness (1/k)	Resistance[b] (R) For thickness listed (1/C)
BUILDING BOARD[c]	Asbestos-cement board	120	75	0.25	...
Boards, Panels,	Asbestos-cement board 1/8 in.	120	75	...	0.033
Subflooring,	Asbestos-cement board 1/4 in.	120	75	...	0.07
Sheathing,	Gypsum or plaster board 3/8 in.	50	75	...	0.32
Woodbased Panel	Gypsum or plaster board 1/2 in.	50	75	...	0.45
Products	Plywood	34	75	1.25	...
	Plywood 1/4 in.	34	75	...	0.31
	Plywood 3/8 in.	34	75	...	0.47
	Plywood 1/2 in.	34	75	...	0.62
	Plywood or wood panels 3/4 in.	34	75	...	0.93
	Insulating board				
	Sheathing, regular density 1/2 in.	18	75	...	1.32
	25/32 in.	18	75	...	2.06
	Sheathing intermediate density 1/2 in.	22	75	...	1.22
	Nail-base sheathing 1/2 in.	25	75	...	1.14
	Shingle backer 3/8 in.	18	75	...	0.94
	Shingle backer 5/16 in.	18	75	...	0.78
	Sound deadening board 1/2 in.	15	...	...	1.35
	Tile and lay-in panels, plain or acoustic	18	75	2.50	...
	1/2 in.	18	75	...	1.25
	3/4 in.	18	75	...	1.89
	Laminated paperboard	30	75	2.00	...
	Homogeneous board from repulped paper	30	75	2.00	...
	Hardboard				
	Medium density siding 7/16 in.	40	75	...	0.67
	Other medium density	50	75	1.37	...
	High density, service temp. service, underlay	55	75	1.22	...
	High density, std. tempered	63	75	1.00	...
	Particleboard				
	Low density	37	75	1.85	...
	Medium density	50	75	1.06	...
	High density	62.5	75	0.85	...
	Underlayment 5/8 in.	40	75	...	0.82
	Wood subfloor 3/4 in.	...	75	...	0.94
BUILDING PAPER	Vapor—permeable felt	...	75	...	0.06
	Vapor—seal, 2 layers of mopped 15 lb felt	...	75	...	0.12
	Vapor—seal, plastic film	...	75	...	Negl.
FINISH FLOORING MATERIALS	Carpet and fibrous pad	...	75	...	2.08
	Carpet and rubber pad	...	75	...	1.23
	Cork tile 1/8 in.	...	75	...	0.28
	Terrazzo 1 in.	...	75	...	0.08
	Tile—asphalt, linoleum, vinyl, rubber	...	75	...	0.05
	Wood, hardwood finish 3/4 in.	...	75	...	0.68
INSULATING MATERIALS	Mineral Fiber, fibrous form processed from rock, slag, or glass				
Blanket and Batt	approx.[e] 2-2¾ in.	...	75	...	7[d]
	approx.[e] 3-3½ in.	...	75	...	11[d]
	approx.[e] 3½-6½ in.	...	75	...	19[d]
	approx.[e] 6-7 in	...	75	...	22[d]
	approx.[d] 8-5 in	...	75	...	30[d]
Board and Slabs	Cellular glass	8.5	75	2.63	...
	Glass fiber organic bonded	4-9	75	4.00	...
	Expanded rubber (rigid)	4.5	75	4.55	...
	Expanded polystyrene extruded, cut cell surface	1.8	75	4.00	...

(Continued)

Copyright National Electrical Manufacturers Association
Provided by IHS under license with NEMA
No reproduction or networking permitted without license from IHS
Not for Resale

Table B-2 (Continued)

Material	Description	Density (Lb per Cu Ft)	Mean Temp F	Resistance[b] (R) Per inch thickness (1/k)	Resistance[b] (R) For thickness listed (1/C)
INSULATING MATERIALS Board and Slabs (Continued)	Expanded polystyrene extruded, (R-12 exp.)	2.2	75	5.00	...
	Expanded polystyrene extruded, (R-12 exp.) (Thickness 1 in. and greater)	3.5	75	5.26	...
	Expanded polystyrene, molded beads.	1.0	75	3.57	...
	Expanded polyurethane[f] (R-11 exp.)	1.5	75	6.25	...
	(Thickness 1 in. or greater)	2.5	...	...	...
	Mineral fiber with resin binder	15	75	3.45	...
	Mineral fiberboard, wet felted				
	Core or roof insulation	16-17	75	2.94	...
	Acoustical tile	18	75	2.86	...
	Acoustical tile	21	75	2.70	...
	Mineral fiberboard, wet molded				
	Acoustical tile[g]	23	75	2.38	...
	Wood or cane fiberboard				
	Acoustical tile[g] 1/2 in.	...	75	...	1.25
	Acoustical tile[g] 3/4 in.	...	75	...	1.89
	Interior finish (plank, tile)	15	75	2.86	...
	Insulating roof deck				
	Approximately 1½ in.	...	75	...	4.17
	Approximately 2 in.	...	75	...	5.56
	Approximately 3 in.	...	75	...	8.33
	Wood shredded (cemented in preformed slabs)	22	75	1.67	...
Loose Fill	Cellulose insulation (milled paper or wood pulp)	2.3-3.2	75	3.13-3.70	...
	Sawdust or shavings	8.0-15.0	75	2.22	...
	Wood fiber, softwoods	2.0-3.5	75	3.33	...
	Perlite, expanded	5.0-8.0	75	2.70	...
	Mineral fiber (rock, slag or glass)				
	approx.[e] 3.75-5 in.	0.6-2.0	75	...	11[d]
	approx.[e] 6.5-8.75 in	0.6-2.0	75	...	19[d]
	approx.[e] 7.5-10 in.	0.6-2.0	75	...	22[d]
	approx.[e] 10.25-13.75 in	0.6-2.0	75	...	30
	Vermiculite (expanded)	7.0-8.2	75	2.13	...
		4.0-6.0	75	2.27	...
Roof Insulation[h]	Preformed, for use above deck				
	Approximately 1/2 in.	...	75	...	1.39
	Approximately 1 in.	...	75	...	2.78
	Approximately 1½ in.	...	75	...	4.17
	Approximately 2 in.	...	75	...	5.56
	Approximately 2½ in.	...	75	...	6.67
	Approximately 3 in.	...	75	...	8.33
	Cellular glass	9	75	2.50	...
MASONRY MATERIALS Concretes	Cement mortar	116		0.20	...
	Gypsum-fiber concrete 87½% gypsum, 12½% wood chips	51		0.60	...
	Lightweight aggregates including expanded shale, clay or slate; expanded slags; cinders; pumice; vermiculite; also cellular concretes	120		0.19	...
		100		0.28	...
		80		0.40	...
		60		0.59	...
		40		0.86	...
		30		1.11	...
	Perlite, expanded	40		1.08	...
		30		1.41	...
		20		2.00	...
	Sand and gravel or stone aggregate (oven dried)	140		0.11	...
	Sand and gravel or stone aggregate (not dried)	140		0.08	...
	Stucco	116		0.20	...

(Continued)

Copyright National Electrical Manufacturers Association
Provided by IHS under license with NEMA
No reproduction or networking permitted without license from IHS
Not for Resale

Table B-2 (Continued)

Material	Description	Density (Lb per Cu Ft)	Mean Temp F	Resistance[h] (R) Per inch thickness (1/k)	Resistance[h] (R) For thickness listed (1/C)
MASONRY UNITS	Brick, common[i]	120	75	0.20	...
	Brick, face[i]	130	75	0.11	...
	Clay tile, hollow:				
	1 cell deep 3 in.	...	75	...	0.80
	1 cell deep 4 in.	...	75	...	1.11
	2 cells deep 6 in.	...	75	...	1.52
	2 cells deep 8 in.	...	75	...	1.85
	2 cells deep 10 in.	...	75	...	2.22
	3 cells deep 12 in.	...	75	...	2.50
	Concrete blocks, three oval core:				
	Sand and gravel aggregate 4 in.	...	75	...	0.71
	8 in.	...	75	...	1.11
	12 in.	...	75	...	1.28
	Cinder aggregate 3 in.	...	75	...	0.86
	4 in.	...	75	...	1.11
	8 in.	...	75	...	1.72
	12 in.	...	75	...	1.89
	Lightweight aggregate 3 in.	...	75	...	1.27
	(expanded shale, clay, slate 4 in.	...	75	...	1.50
	or slag; pumice) 8 in.	...	75	...	2.00
	12 in.	...	75	...	2.27
	Concrete blocks, rectangular core.[j]				
	Sand and gravel aggregate				
	2 core, 8 in. 36 lb[k]	...	45	...	1.04
	Same with filled cores[j]	...	45	...	1.93
	Lightweight aggregate (expanded shale, clay, slate or slag, pumice):				
	3 core, 6 in. 19 lb[k]	...	45	...	1.65
	Same with filled cores[l]	...	45	...	2.99
	2 core, 8 in. 24 lb.[k]	...	45	...	2.18
	Same with filled cores[l]	...	45	...	5.03
	3 core, 12 in. 38 lb[k]	...	45	...	2.48
	Same with filled cores[l]	...	45	...	5.82
	Stone, lime or sand	...	75	0.08	...
	Gypsum partition tile:				
	3X12X30 in. solid	...	75	...	1.26
	3X12X30 in. 4-cell	...	75	...	1.35
	4X12X30 in. 3-cell	...	75	...	1.67
METALS	(See Chapter 39, Table 3, *ASHRAE Handbook, 1985 Fundamentals Volume*)				
PLASTERING MATERIALS	Cement plaster, sand aggregate	116	75	0.20	...
	Sand aggregate 3/8 in.	...	75	...	0.08
	Sand aggregate 3/4 in.	...	75	...	0.15
	Gypsum plaster:				
	Lightweight aggregate 1/2 in.	45	75	...	0.32
	Lightweight aggregate 5/8 in.	45	75	...	0.39
	Lightweight agg. on metal lath 3/4 in.	...	75	...	0.47
	Perlite aggregate	45	75	0.67	...
	Sand aggregate	105	75	0.18	...
	Sand aggregate 1/2 in.	105	75	...	0.09
	Sand aggregate 5/8 in.	105	75	...	0.11
	Sand aggregate on metal lath 3/4 in.	...	75	...	0.13
	Vermiculite aggregate	45	75	0.59	...
ROOFING	Asbestos-cement shingles	120	75	...	0.21
	Asphalt roll roofing	70	75	...	0.15
	Asphalt shingles	70	75	...	0.44
	Built-up roofing 3/8in.	70	75	...	0.33
	Slate 1/2 in.	...	75	...	0.05
	Wood shingles, plain and plastic film faced	...	75	...	0.94

(Continued)

Copyright National Electrical Manufacturers Association
Provided by IHS under license with NEMA
No reproduction or networking permitted without license from IHS
Not for Resale

Table B-2 (Continued)

Material	Description	Density (Lb per Cu Ft)	Mean Temp F	Resistance[b] (R) Per inch thickness (1/k)	Resistance[b] (R) For thickness listed (1/C)
SIDING MATERIALS (On Flat Surface)	Shingles				
	Asbestos-cement	120	75	...	0.21
	Wood, 16 in., 7½ exposure	...	75	...	0.87
	Wood, double, 16-in., 12-in. exposure	...	75	...	1.19
	Wood, plus insul. backer board. ... 5/16 in.	...	75	...	1.40
	Siding				
	Asbestos-cement, 1/4 in., lapped	...	75	...	0.21
	Asphalt roll siding	...	75	...	0.15
	Asphalt insulating siding (1/2 in. bd.)	...	75	...	1.46
	Wood, drop, 1X8 in.	...	75	...	0.79
	Wood, bevel, ½X8 in., lapped	...	75	...	0.81
	Wood, bevel, ¾X10 in., lapped	...	75	...	1.05
	Wood, plywood, 3/8 in., lapped	...	75	...	0.59
	Wood, medium density siding, 7/16 in	40	75	0.67	...
	Aluminum or Steel[m], over sheathing				
	Hollow-backed	...	...	...	0.61
	Insulating-board backed nominal 3/8 in	...	...	...	1.82
	Insulating-board backed nominal 3/8 in foil backed	...	...	...	2.96
	Architectural glass	...	75	...	0.10
WOODS	Maple, oak, and similar hardwoods	45	75	0.91	...
	Fir, pine, and similar softwoods	32	75	1.25	...
	Fir, pine, and similar softwoods ... 3/4 in.	32	75	...	0.94
	... 1½ in.	32	75	...	1.89
	... 2½ in.	32	75	...	3.12
	... 3½ in.	32	75	...	4.35

[a] Representative values for dry materials is selected by the ASHRAE Committee 4.4 on Insulation. They are intended as design (not specification) values for materials of building construction in normal use. For conductivity of a particular product, the user may obtain the value supplied by the manufacturer or secure the results of unbiased tests.

[b] Resistance values are the reciprocals of C before rounding off C to two decimal places.

[c] See also Insulating Materials, Board.

[d] Includes paper backing and facing if any. In cases where the insulation forms a boundary (highly reflective or otherwise) of an air space, refer to Tables 1 and 2, to obtain the insulating value of air space for the appropriate effective emissivity and temperature conditions of the space.

[e] Conductivity varies also with fiber diameter. See also Factors Affecting Thermal Conductivity and Fig. 1, Chapter 17. Insulation is produced by different densities, therefore, there is a wide variation in thickness for the same R-value between various manufacturers. No effort should be made to relate any specific R-value to any specific thickness. The commercial thicknesses generally available range from 1½ to 7 in.

[f] These are values for aged board stock. For discussion on the change in conductivity with age of Refrigerant 11 expanded urethane see Chapter 17, Factors Affecting Thermal Conductivity.

[g] Insulating values of acoustical tile vary depending on density of the board and on the type, size, and depth of the perforations. An average conductivity k value is 0.40.

[h] The U. S. Department of Commerce, Simplified Practice Recommendation for Thermal Conductances Factors for Preformed Above-Deck Roof Insulation, No. R 257-55, recognizes the specification of roof insulation on the basis of the C values shown. Roof insulation is made in thicknesses to meet these values. Therefore, thickness supplied by different manufacturers may vary depending on the conductivity k value of the particular material.

[i] Face brick and common brick do not always have these specific densities. When the density is different from that shown, there will be a change in the thermal conductivity.

[j] Data on rectangular core concrete blocks differs from the above data on oval core blocks due to core configuration, different mean temperatures and possibly differences in unit weights. Weight data on the oval core blocks tested is not available.

[k] Weights of units aproximately 7⅝ in. high and 15⅝ in. long. These weights are given as a means of describing the blocks tested, but conductance values are all for one square foot of area.

[l] Vermiculite, perlite or mineral wool insulation. Where insulation is used vapor barriers or other precautions must be considered to keep insulation dry.

[m] Values for metal siding applied over flat surfaces vary widely depending upon the amount of ventilation of air space beneath the siding, whether the air space is reflective or nonreflective, and on the thickness, type, and application of insulating backing-board used. Values given are averages intended for use as design guide values and were obtained from several guarded hot-box tests (ASTM C236) on hollow-backed types and on types made using backer-board of wood-fiber, foamed plastic, and glass fiber. Departures of ± 50 percent, or more, from the values given may occur.

*Extracted from *ASHRAE Handbook, 1985 Fundamentals Volume,* Chapter 23, Pages 6–9.

Copyright National Electrical Manufacturers Association
Provided by IHS under license with NEMA
No reproduction or networking permitted without license from IHS
Not for Resale

Appendix C
DESIGN TEMPERATURE DIFFERENCES

C.1 Sections Directly Exposed to Outdoors

The heat transmission loss of building sections exposed directly to the outdoors (outside walls, windows, doors, and roofs with no attic space) is determined by multiplying the U value by the area involved times the difference in temperature in degrees F between the inside and outside. Fig. 3-1 provides a graphical solution of area times U value, using RT numbers and area only. Table 3-1 reproduces information from Fig. 3-1 in tabular form. Multiplying that product by the temperature difference provides the heat transmission loss for the section.

Forms 1 and 2, pages 15 and 16, may be used similarly to solve for the heat transmission loss in electrical units (watts) rather than heat units (Btuh).

The outdoor design condition for cooling requires not only the dry bulb temperature (alone required for heating) but an indication of moisture (or latent heat) condition as well. The outdoor daily range of summer temperatures (difference between average maximum and minimum temperature in warmest months) gives an indication, while the combination of dry bulb and wet bulb temperatures defines an exact outdoor condition.

This manual uses a designation of the outdoor design dry bulb temperature and the daily temperature range classed as:

L—low (less than 15 degrees).
M—medium (15 to 25 degrees).
H—high (over 25 degrees).

Outdoor design conditions for winter and summer are tabulated in the ASHRAE Handbook.

C.2 Sections Exposed to Unheated or Ventilated Spaces

Many roof constructions include substantial attic spaces ventilated for moisture control. Floors (neither slab nor over basements) usually include a subfloor area or crawl space ranging from moderately to very well (pier construction) ventilated. Some walls and windows are exposed to unheated rooms rather than outside or heated spaces.

The temperature of the attic or crawl space or other unheated space may be calculated based on the thermal construction of the various sections involved plus a knowledge of the infiltration and ventilation rates of air entering the space from outside. Procedures for such calculations are found in the *ASHRAE Handbook, 1985 Fundamentals Volume,* Chapter 25. However, if a reasonable level of insulation is used in the section between the occupied area and the unheated area involved, the error introduced by assuming the unheated space is at the outside design temperature will not affect the calculations materially. If little or no insulation is used, however, the calculation should be made.

For walls exposed to unheated spaces (garage, storage area, etc.), if the foregoing calculations are not desired, the temperature of the unheated space may be assumed to be one-third as much above the outside temperature as the heated space is above the outside temperature. For example, if the heated space is maintained at 75 °F and the outside design temperature is 0 °F, the unheated room may be assumed to be at 25 °F (1/3 of 75 minus 0).

For floors exposed to unheated basements, the basement temperature may be assumed to be half as much above the outside temperature as the heated space is above the outside temperature or 37.5 °F for the temperatures considered in the preceding paragraph. The unheated basement gains moderate heat from subgrade soil exposure when the basement temperature falls below 45 °F. Consequently, unheated basements, substantially all-below grade, are not normally as cold as unheated rooms above grade.

Copyright National Electrical Manufacturers Association
Provided by IHS under license with NEMA
No reproduction or networking permitted without license from IHS
Not for Resale

Appendix D
DETERMINATION OF TRANSMISSION LOSSES

As discussed in Part 3, par. 3.2, the transmission losses can be found by utilizing the relationship of area and resistance to heat flow. Using the figures or tables in the manual, the area-resistance relationship is used to determine the loss per degree F temperature difference.

Appendix E
AIR CHANGES—INFILTRATION AND VENTILATION

Infiltration is the air leakage through cracks and interstices, around windows and doors, and through floors and walls of a building of any type from a low one-story house or commercial building to a multi-story skycraper. The magnitude of infiltration depends on the type of construction, workmanship, and condition of the building.

The rate of infiltration cannot be controlled by the inhabitants of the building to any considerable extent. Natural ventilation is the intentional displacement of air through specified openings, such as windows, doors, and by ventilators.

The rate of air flow into and out of a building due to infiltration, exfiltration, or natural ventilation depends on the magnitude of the pressure difference between the inside and outside of the structure and on the resistances to flow of air offered by openings and interstices in the building. The pressure difference exerted on the building enclosure by the air may be caused either by wind or by a difference in density of the air inside and outside. The effect of the difference in density is often called chimney or stack effect and is often the major factor causing infiltration. The pattern of air flow through any part of the structure depends on both the pressure difference and the area of openings. When the pressure difference is the result of wind pressure, air will enter the building through openings in the windward walls and leave through openings in the leeward walls or through ventilating ducts in the roof as may be the case for one-story commercial buildings. When the pressure difference is caused by the indoor-outdoor temperature difference, the flow will be along the path of least resistance from inlets at lower levels to outlets at higher levels in a heated building.

In most instances the pressure difference between inside and outside will result from temperature difference forces. Mechanical ventilation and exhaust systems can affect pressure differences across the building enclosure, depending on the design.

E. 1 Infiltration

a. In the manual, a simplified procedure of determining the total load and room-by-room division of the load was presented. Because of the significant influence of windows and doors on both transmission and infiltration loads, the part of the total load attributed to each room was weighted to accommodate that influence. In buildings which are insulated to at least minimum comfort standards (about RT 11 for opaque sections and double glazing, typically), and not over two stories high (which includes most split-level buildings), the procedures indicated are applicable, regardless of the use made of the buildings.

b. In higher buildings (extending over 30 feet above grade), when heated, the infiltration due to the stack effect produces a negative inside pressure and inward flow of air at low levels, and a positive inside pressure with outward flow of air at high levels. At some level, with temperature forces acting as above, there is a neutral zone, or a level where no pressure difference and no inward or outward flow occurs. Indications are that the better a building is sealed (weather-stripping, sealed off vertical shafts like elevator stairways, utility shafts, etc.), the lower the neutral zone. Available data indicate apparent levels of neutral zone from 0.3 to 0.7 of building height.

c. Infiltration in summer is only about half the winter infiltration rate.

In higher buildings, the air flow inward (at lower levels or on the windward side) requires heating capacity in the room involved to bring the infiltrating outside air up to room temperature. However, the air flow outward (at higher levels or on the lee side) requires no heating capacity.

In higher buildings, especially with poor seals on windows or vertical shafts inside the building, air change rates greater than three quarters of an air change per hour

Copyright National Electrical Manufacturers Association
Provided by IHS under license with NEMA
No reproduction or networking permitted without license from IHS
Not for Resale

should be figured. In high bay, industrial, corrugated metal buildings, with roof vents in closed position for example, air change rates, due to infiltration, as high as three per hour have been experienced.

d. A more detailed discussion of infiltration and ventilation will be found in the *ASHRAE Handbook, 1985 Fundamentals Volume,* Chapter 22.

E.2 Ventilation

Ventilation is movement of air through a building by mechanical means, either forcing or exhausting. The fans or blowers used are usually rated in air handling capacities (cubic feet per minute or cfm) at various static pressures. Engineering judgment is required to determine from such ratings the volume of air handled by the mechanical system. The pressure involved is usually almost entirely that of the air handling system, since maintenance of any significant positive or negative pressure in a structure is seldom practical.

E.3 Heat Loss Due to Air Changes

a. When infiltration is determined by air change rates, the heat loss due to air changes may be determined by multiplying the volume (in cubic feet) of the space by the air change rate (number of changes per hour) times 0.0179 Btuh per degree F (or 0.00526 watts per degree F) times the difference between inside and outside temperature.

b. When infiltration or ventilation is determined by air flow rates, the heat loss due to air changes may be determined by multiplying the air flow in cfm by 1.1 Btuh per degree F (or 0.323 watts per degree F) times the difference between the inside and outside temperature.

c. Since infiltration due to natural causes uses half the cracks for infiltration (windward side) and half for exfiltration (lee side), ventilation to neutralize infiltration would need to have twice the air quantity to utilize both sets of cracks. Therefore, ventilation rates which are twice the infiltration rate or higher eliminate infiltration. Ventilation rates which are less than twice the infiltration rate result in an air change rate equal to the ventilation rate plus one half the difference between twice the infiltration rate minus the ventilation rate.

Copyright National Electrical Manufacturers Association
Provided by IHS under license with NEMA
No reproduction or networking permitted without license from IHS
Not for Resale

Copyright National Electrical Manufacturers Association
Provided by IHS under license with NEMA
No reproduction or networking permitted without license from IHS
Not for Resale

FORM 1—ENVELOPE HEAT LOSS CALCULATION

Exposure	1 Design Temperature Difference	2 Applicable Length, Area or Volume	3 Section Thermal Resistance	4 Multiplier* Watts/Degree	5 (1 × 4) Heat Loss	Revised			
						RT	U	Multiplier* Watts/Degree	Heat Loss
Gross Wall #1									
Glass #1									
Doors									
Net Wall #1									
Gross Wall #2									
Glass #2									
Doors #2									
Net Wall #2									
Ceilings									
Floors (Not Slab)									
Slab Floors (Perimeter)									
Infiltration									
Ventilation									
TOTAL									

Slab (Perimeter)—Multiply length of exposed edge by 5, then divide that product by 10.2 times the resistance (R) of the perimeter insulation.
Infiltration—1/4 air change/hour = 0.00129 watts/°F/Ft
1/2 air change/hour = 0.00258 watts/°F/Ft
3/4 air change/hour = 0.00387 watts/°F/Ft
Fireplace damper—Tight = 5.86 watts/°F
Average = 14.6 watts/°F
No damper = 43.9 watts/°F

Exhaust Fans—No damper = 11.7 watts/°F
Glass—Single glazing - RT = 0.88
Double glazing - RT = 1.45
Triple glazing - RT = 2.13
Doors—Less than 1" thick - RT = 1.0
More than 1" thick - RT = 2.0

$$*\text{Multiplier} = \frac{2}{3.41 \times RT} = \text{watts/°F}$$

HE 1-80 [redacted] 6470247 0001255 6

Copyright National Electrical Manufacturers Association
Provided by IHS under license with NEMA
No reproduction or networking permitted without license from IHS
Not for Resale

NEMA

FORM 2—ROOM-BY-ROOM DISTRIBUTION OF HEAT LOSS

NAME: _____ LOCATION: _____ DATE: _____ TELEPHONE: _____

CONSTRUCTION: New: Conversion: Stories: Basement Use: DESIGN TEMP: °F Inside; °F Outside; °TD; DD

INSULATION: Walls: R- RT Ceilings: R- RT Floors: R- RT Doors: Windows:

FLOOR AREA OF HEATED AREA, SQ. FT. kW HEAT LOSS: ESTIMATED ANNUAL HEAT COST:

The figures quoted herein are estimates *only* and shall not constitute a guarantee.

1		2	3	4 (2 & 3)	5	6	7	8	9
Name of Room	**Size of Room**	**Wall, Linear Feet**	**Windows and Doors, Adjusted Sq. Ft.**	**Equivalent Wall, Linear Feet**	**Fraction of Equivalent Wall, Linear Feet**	**Required Heating Capacity, kW or Watts**	**Heating Units**	**Heating Units**	**Installed Heating Capacity, kW or Watts**
TOTALS									

TOTAL HEAT LOSS = ( ) Watts

ESTIMATED ANNUAL ELECTRIC USE = ( ) kW Loss X ( ) Degree Days X ( ) C = ( ) kW hr/yr X ( ) Average Rate = _____ Annual Cost

Copyright National Electrical Manufacturers Association
Provided by IHS under license with NEMA
No reproduction or networking permitted without license from IHS
Not for Resale

NEMA

FORM 3—ELECTRIC COMFORT HEATING ESTIMATE

FOR:

BLDG USE	DESIGN TEMP. INSIDE T_I °F	INSULATION TYPE	CONSTRUCTION 1st FLOOR: CRAWLSPACE ___ BASEMENT ___ SLAB ___
STREET	OUTSIDE T_O °F	"R" FACTORS: WALL ___	BASEMENT: HEATED ___ UNHEATED ___
CITY	TD (T_I-T_O) °F	FLOOR ___ CEILING ___	BASEMENT: WALL ABOVE GRADE ___ BELOW GRADE ___
TYPE CONST	DEGREE DAYS	WINDOW TYPE	FIREPLACE NO. ___ . DAMPERS ___
NO OF STORIES	INFILTRATION OR AIR CHANGES	DOOR TYPE	SLAB INSULATION TYPE ___ "R" FACTOR ___

ROOM NAME																													
ROOM DIMENSION	W	L	CH	W	L	CH	W	L	CH	W	L	CH	W	L	CH	W	L	CH	W	L	CH	W	L	CH	W	L	CH		
ROOM SIZE: SQ FT																													
EXPOSED WALL, LINEAR FEET																													
GLASS AREA (W x L)																													
Source of Loss	RT	Multiplier*	Area	Watts Loss	Area	Watts Loss	Area	Watts Loss	Area	Watts Loss	Area	Watts Loss	Area	Watts Loss	Area	Watts Loss	Area	Watts Loss	Area	Watts Loss	Area	Watts Loss	Area	Watts Loss	Area	Watts Loss	Area	Watts Loss	
Gross Wall, Sq Ft																													
Glass Area, Sq Ft																													
Door Area, Sq Ft																													
Net Wall Area, Sq Ft																													
Ceiling Area, Sq Ft																													
Floor Area, Sq Ft																													
Slab Edge, Linear Ft																													
Room Volume, Cubic Ft																													
ROOM TOTALS: Watts																													
Equipment: Baseboard																													
Baseboard																													
Baseboard																													
Other (Specify)																													
Thermostat																													
Installed Watts																													

PREPARED BY ___	TOTAL HEAT LOSS	TOTAL CONNECTED LOAD	ESTIMATED ANNUAL HEATING COST
DATE ___	WATTS ___	SPACE HEATING WATTS ___	SEE FORM 4 $ ___

*Multiplier—TD ÷ (3.41 × RT) = Watts/Ft^2
Multiplier for Slab Floor, (TD × 5) ÷ (10.2 × RT) = Watts/Ft
Multiplier for infiltration, 1/4 air change/hr., 0.00129 × TD = Watts/Ft^3
1/2 air change/hr., 0.00258 × TD
3/4 air change/hr., 0.00387 × TD

The figures quoted herein are estimates only, and shall not constitute a guarantee.

Watts loss = Area X multiplier

HE 1-80
6470247 0001257 0

NEMA

FORM 4—FLOOR PLAN

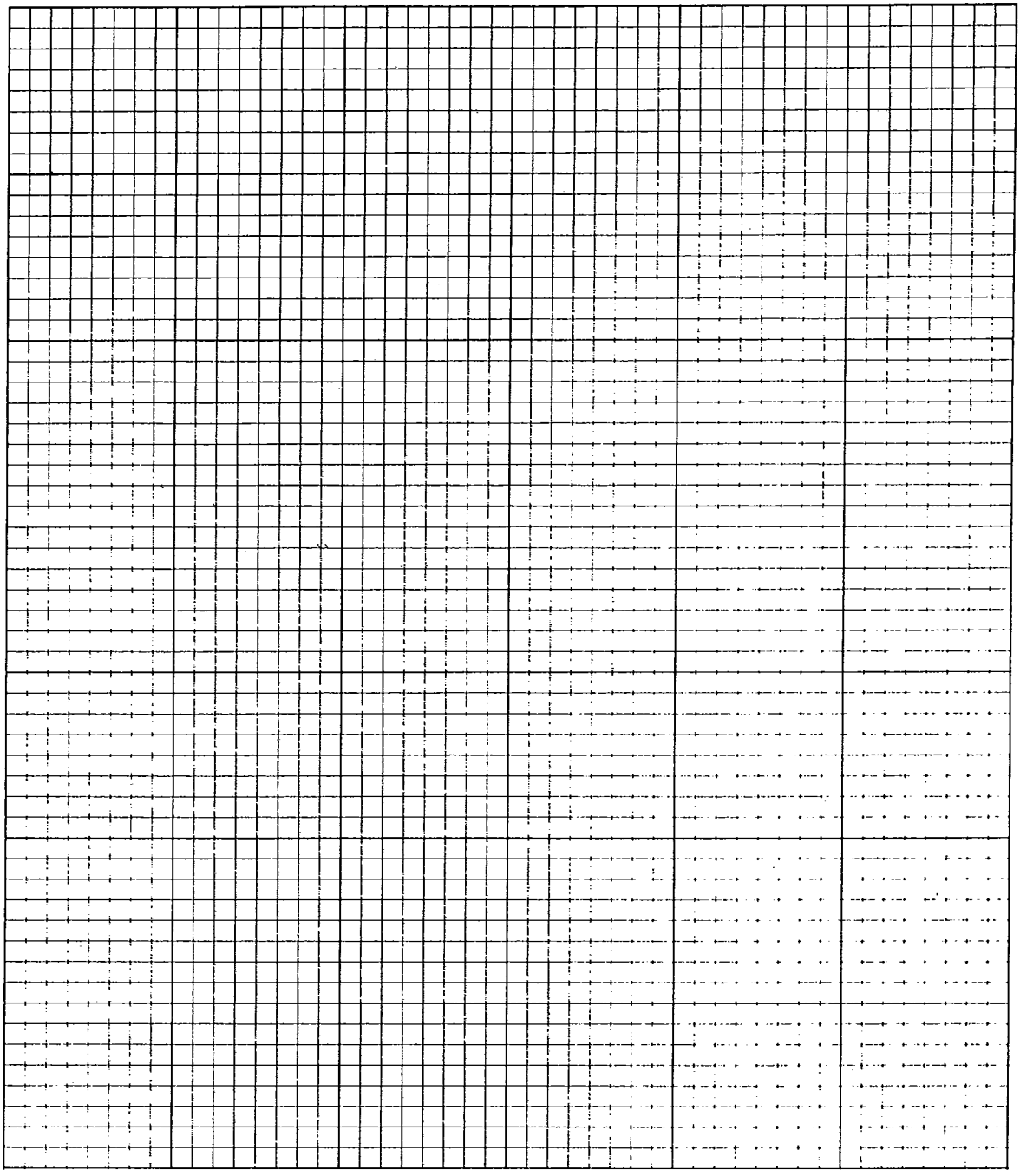

ESTIMATED ANNUAL HEATING COST

TOTAL HEAT LOSS = ( ) Watts

ESTIMATED ANNUAL KWHR USE = $\frac{(\quad) \text{ kW Loss X } (\quad) \text{ Degree Days X } (\quad) C^*}{TD}$ = ( ) kWhr/yr

ESTIMATED ANNUAL HEATING COST = ( ) kWhr/yr X ( ) Cost/kWhr/yr = $ per year

*C factor of 17 is conservative; contact power supplier for local recommendations.

Copyright National Electrical Manufacturers Association
Provided by IHS under license with NEMA
No reproduction or networking permitted without license from IHS
Not for Resale

NEMA

FORM 5—HEAT GAIN AND HEAT LOSS CALCULATION

SENSIBLE LOAD

1. Solar Heat Gain. (Use all applicable exposures. Add loads together.)

Windows Facing Toward	No Shading	Inside Shading and Overhang Of					Outside Shading	Window & Door, Glass Area, Sq. Ft.	Cooling Load, Btuh*
		0′	1′	2′	3′	4′			
N	15	8	5	2	0	0	0		
NE	30	15	15	14	12	10	0		
E	50	25	25	23	20	15	0		
SE	50	30	25	18	2	0	0		
S	25	15	10	4	0	0	0		
SW	80	40	30	24	10	0	5		
W	95	50	50	45	35	30	8		
NW	60	30	30	25	22	20	7		

*Multiply solar cooling load by 0.8 for regular double glass, and by 0.6 for heat absorbing double glass.

( ) Btuh X ( )

2. Transmission Loads

Exposure	Design TD		Area—Length, Volume or Other	RT	Area / RT	Cool TD / RT or Other Factor	Cooling Load, Btuh or Watts	Area / RT or Other Factor	Heating Load, Btuh or Watts
	Summer	Winter							
Gross Wall #1									
Glass #1									
Doors #1									
Net Wall #1									
Gross Wall #2									
Glass #2									
Doors #2									
Net Wall #2									
Ceiling #1									
Ceiling #2									
Floor #1									
Floor #2									
Slab Floors (perimeter)									

3. Loads Due to Air Changes

Infiltration									
Ventilation									

4. Internal Loads

People, Avg. No.					
Lights & Appliances					
Other					

TOTAL SENSIBLE LOAD

LATENT LOAD

5. Latent Heat Gains

Infiltration					
Ventilation					
People, Avg. No.					
Appliances					
Other					

TOTAL SYSTEM LOAD (NET TO CONDITIONED SPACE)____Tons Cooling Heating

Copyright National Electrical Manufacturers Association
Provided by IHS under license with NEMA
No reproduction or networking permitted without license from IHS

Not for Resale

Copyright National Electrical Manufacturers Association
Provided by IHS under license with NEMA
No reproduction or networking permitted without license from IHS
Not for Resale

NEMA

FORM 6—ROOM-BY-ROOM DISTRIBUTION OF HEAT GAIN

NAME: _____ LOCATION: _____ DATE: _____ TELEPHONE: _____

CONSTRUCTION: New: Conversion: Stories: Basement Use: DESIGN TEMP: F Inside; F Outside; °TD;

INSULATION: Walls: R- Ceilings: R- Floors: R- Doors: Windows:

FLOOR AREA OF CONDITIONED AREA, SQ. FT.

BTUH HEAT GAIN:

The figures quoted herein are estimates *only* and shall not constitute a guarantee.

1		2	3	4 (2 & 3)	5	6	7	8	9
Name of Room	Size of Room	Wall, Linear Feet	Windows and Doors, Adjusted Sq. Ft.	Equivalent Wall, Linear Feet	Fraction of Equivalent Wall, Linear Feet	Required Cooling Capacity, Btuh	Cooling Units	Room Air, Cfm	Installed Cooling Capacity, Btuh
TOTALS									

TOTAL HEAT GAIN = ( ) Btuh or ( ) Tons

HE 1-80

Pub. No. HE 1
Pub. No. 45

6470247 0001260 0

NEMA STANDARDIZATION

The purpose of NEMA Standards, their classification and status are set forth in certain clauses of the NEMA Bylaws, which are quoted below:

Purpose of Standards

National Electrical Manufacturers Association Standards are adopted in the public interest and are designed to eliminate misunderstandings between the manufacturer and the purchaser and to assist the purchaser in selecting and obtaining the proper product for its particular need. Existence of a National Electrical Manufacturers Association Standard does not in any respect preclude any member or nonmember from manufacturing or selling products not conforming to the standard.

(Bylaw—Art. V, Sec. 1)

Definition of a Standard

A standard of the National Electrical Manufacturers Association defines a product, process or procedure with reference to one or more of the following: nomenclature, composition, construction, dimensions, tolerances, safety, operating characteristics, performance, rating, testing, and the service for which they are designed.

(Bylaw—Art. V, Sec. 2, Subsection A)

Dimensions

Where dimensions are given for interchangeability purposes, alternate dimensions satisfying the other provisions of the standards publication may be capable of otherwise equivalent performance.

(NEMA Policy Memorandum 84-2, dated June 7, 1984)

Classes of Standards

National Electrical Manufacturers Association Standards are of two classes:

1. NEMA Standard, which relates to a product commercially standardized and subject to repetitive manufacture, which standard has been approved by at least 90 percent of the members of the Subdivision eligible to vote thereon;
2. Suggested Standard for Future Design, which may not have been regularly applied to a commercial product, but which suggests a sound engineering approach to future development, which standard has been approved by at least two-thirds of the members of the Subdivision eligible to vote thereon.

(Bylaw—Art. V, Sec. 2, Subsection B)

Authorized Engineering Information

Authorized Engineering Information consists of explanatory data and other engineering information of an informative character not falling within the classification of NEMA Standard or Suggested Standard for Future Design.

(Bylaw—Art. V, Sec. 6, 1st Sentence)

Official Standards Proposal

An Official Standards Proposal is an official draft of a proposed standard which is formally recommended to an outside organization(s) for consideration, comment and/or approval.

(Bylaw—Art. V, Sec. 4, Subsection A)

Identification of Status

Standards in NEMA Standards Publications are identified in the foreword or following each standard as "NEMA Standard" or "Suggested Standard for Future Design." These indicate the status of the standard. These words are followed by a date which indicates when the standard was adopted in its present form by the Association.

The material identified as "Authorized Engineering Information" and "Official Standards Proposal" is designated similarly.

Copyright National Electrical Manufacturers Association
Provided by IHS under license with NEMA
No reproduction or networking permitted without license from IHS
Not for Resale

ELECTRIC ENVIRONMENTAL EQUIPMENT SECTION OF THE NATIONAL ELECTRICAL MANUFACTURERS ASSOCIATION

MEMBER COMPANIES

Bel Thermal Units, Inc.
Ft. Lauderdale, FL 33334

Cadet Manufacturing Company
Vancouver, WA 98668

Fasco Industries, Inc.
Consumer Products Division
Fayetteville, NC 28302

Heat Products, Inc.
Lake City, FL 32055

Marley Electric Heating Company
Bennettsville, SC 29512

Mor-Mar Products, Inc.
N. Tonawanda, NY 14120

TPI Corporation
Johnson City, TN 37601

Vulcan Radiator Corporation
South Windsor, CT 06074

Warren Manufacturing Company
Hialeah, FL 33016

Wellman Thermal Systems Corporation
Shelbyville, IN 46176

Copyright National Electrical Manufacturers Association
Provided by IHS under license with NEMA
No reproduction or networking permitted without license from IHS
Not for Resale