STD·NEMA GR 1-ENGL 1997 ■ 6470247 0518410 62T ■

NEMA STANDARDS PUBLICATION

GR 1

GROUND RODS AND GROUND ROD COUPLINGS

NATIONAL ELECTRICAL MANUFACTURERS ASSOCIATION

Copyright National Electrical Manufacturers Association
Provided by IHS under license with NEMA
No reproduction or networking permitted without license from IHS
Not for Resale

STD.NEMA GR 1-ENGL 1997 ■ 6470247 0518411 566 ■

American National Standard

Approved as an American National Standard
ANSI Approval Date: October 7, 1998

NEMA Standards Publication GR 1-1997
GROUND RODS AND GROUND ROD COUPLINGS

Published by

National Electrical Manufacturers Association
1300 N. 17th Street, Suite 1847
Rosslyn, VA 22209

© Copyright 1998 by the National Electrical Manufacturers Association. All rights including translation into other languages, reserved under the Universal Copyright Convention, the Berne Convention for the Protection of Literary and Artistic Works, and the International and Pan American Copyright Conventions.

Copyright National Electrical Manufacturers Association
Provided by IHS under license with NEMA
No reproduction or networking permitted without license from IHS
Not for Resale

TABLE OF CONTENTS

Foreword iii

Section 1 GENERAL

1.1 Scope 1
1.2 Normative References 1
1.3 Units of Measurement 2
1.4 Definitions 2

Section 2 COPPER BONDED GROUND RODS

2.1 Steel Core Properties 3
2.2 Copper Thickness 3
2.3 Length 3
2.4 Rod Diameters 3
2.5 Threads 3
2.6 End Configurations 4
2.7 Adhesion 4
2.7.1 Test Method 5
2.7.2 Evaluation 5
2.8 Ductility 5
2.8.1 Test Method 5
2.8.2 Evaluation 5
2.9 Surface Condition 5
2.10 Straightness 5
2.10.1 Test Method 5
2.10.2 Evaluation 6
2.11 Markings 6

Section 3 ZINC COATED GROUND RODS

3.1 Steel Core Properties 7
3.2 Zinc Coating 7
3.2.1 Coating Method 7
3.2.2 Thickness 7
3.2.3 Measurement 7
3.3 Length 7
3.4 Rod Diameters 7
3.5 Adhesion 7
3.5.1 Test Method 8
3.5.2 Evaluation 8
3.6 Finish 8
3.7 Straightness 8
3.7.1 Test Method 8
3.7.2 Evaluation 8
3.8 End Configurations 8
3.9 Markings 8

Copyright National Electrical Manufacturers Association
Provided by IHS under license with NEMA
No reproduction or networking permitted without license from IHS
Not for Resale

Section 4 COUPLINGS FOR COPPER BONDED GROUND RODS

4.1 Physical Properties 11
4.1.1 Surface Condition 11
4.1.2 Material 11
4.2 Construction 11
4.2.1 Length 11
4.2.2 Application Diameter 11
4.3 Performance 12
4.3.1 Conductivity 12
4.3.2 Impact 12
4.3.3 Pullout 12
4.3.4 Bend 12
4.3.5 Mechanical Strength 13
4.4 Markings 13

Copyright National Electrical Manufacturers Association
Provided by IHS under license with NEMA
No reproduction or networking permitted without license from IHS
Not for Resale

Foreword

This Standards Publication provides practical information concerning construction, test, performance, and manufacture of ground rods and ground rod couplings. This standard is intended for use by the electrical industry to provide guidelines for the manufacture and proper application of these products, and to promote the benefits of repetitive manufacture and widespread product availability.

One of the primary purposes of this Standards Publication is to encourage the manufacture and utilization of products which, in themselves, function in accordance with these standards. While some sections of this publication are intended to eliminate misunderstandings between manufacturers and users, all sections when applied properly, contribute to safety in one way or another.

The proper manufacture of ground rods and ground rod couplings is, however, only one consideration in promoting the safe utilization of electricity. Other safety considerations, including environmental conditions, system design, equipment selection and application, installation, operating practices and maintenance, involve the joint efforts of the system designer, the various equipment manufacturers, the installer, and the user. Information is provided herein to assist in proper selection and use.

This Standards Publication covers design and performance requirements for ground rods and ground rod couplings, and provides recommendations for their selection and use under normal or certain specific conditions. These standards have been promulgated with a view of promoting safety to persons and property when products conforming with them are selected, installed, and maintained in accordance with the *National Electrical Code*.

NEMA Standards Publications are periodically reviewed to meet changing conditions and technical progress, and the latest edition should be utilized. Purchasers will be notified as to when revisions take place and will be provided an opportunity to acquire these when available.

Comments from users of this standards publication are welcome. They should be sent to:

Vice President, Engineering
National Electrical Manufacturers Association
1300 N. 17th Street, Suite 1847
Rosslyn, VA 22209

This Standards Publication was developed by the Ground Rods and Accessories Section of the National Electrical Manufacturers Association. At the time it was approved, the Ground Rods and Accessories Section had the following members:

Apache Grounding—Lebanon, TN
Eritech, Inc.—Aberdeen, NC
Galvan Industries, Inc.—Harrisburg, NC
Connector Castings, Inc.—St. Louis, MO
Thomas & Betts Corporation—Memphis, TN

Copyright National Electrical Manufacturers Association
Provided by IHS under license with NEMA
No reproduction or networking permitted without license from IHS
Not for Resale

Section 1
GENERAL

1.1 SCOPE

This Standards Publication applies to materials, construction, and performance of copper bonded and zinc coated ground rods and ground rod couplings that function in accordance with the *National Electrical Code* (NFPA 70-1997).

1.2 NORMATIVE REFERENCES

This NEMA Standards Publication represents the results of research and investigation by the members of NEMA, its Sections and Committees. It has been developed through consultation among manufacturers, users, and national engineering societies. This publication references the following standards:

American National Standards Institute
11 West 42nd Street
New York, NY 10036

ANSI C135.30-1988	*Zinc-Coated Ferrous Ground Rods for Overhead or Underground Line Construction*

American Society for Testing and Materials
100 Barr Harbor Drive
Conshohocken, PA 19428-2959

ASTM A 123-1989	*Standard Specification for Zinc (Hot Dip Galvanized Coatings of Iron and Steel Products*
ASTM A153-1987	*Standard Specification for Zinc (Hot Dip Galvanized) Coatings on Iron and Steel Hardware*
ASTM A 370-1994	*Test Methods and Definitions for Mechanical Testing of Steel Products*
ASTM B 242-1990	*Standard Practice for Preparation of High Carbon Steel for Electroplating*
ASTM B 183-1990	*Standard Practice for Preparation of Low-Carbon Steel for Electroplating*
ASTM B 571-1991	*Test Methods for Adhesion of Metallic Coatings*
ASTM B 633-1994	*Standard for Electrodeposited Coatings of Zinc on Iron and Steel*
ASTM E 376-1994	*Recommended Practice for Measuring Coating Thickness by Magnetic-Field or Eddy-Current (Electromagnetic) Test Methods*

Underwriters Laboratories, Inc.
333 Pfingsten Road
Northbrook, IL 60062

ANSI/UL 467-1993	*Standard for Grounding and Bonding Equipment*

Copyright National Electrical Manufacturers Association
Provided by IHS under license with NEMA
No reproduction or networking permitted without license from IHS

Not for Resale

1.3 UNITS OF MEASUREMENT

The primary units of measure in this Standards Publication are based on the conventional inch-pound system which is commonly accepted and used by the electrical construction industry.

1.4 DEFINITIONS

1.4.1 Adhesion—The physical bond between the applied metal and the core metal.

1.4.2 Copper Bond—The physical bond between the copper and the core metal.

1.4.3 Coupling—A connecting device for mechanically and electrically joining two ground rods in series.

1.4.4 Ground Rod—A solid metal rod capable of being driven into the earth for use as a grounding electrode.

1.4.5 Zinc Coating—The layer of zinc around the core metal.

Copyright National Electrical Manufacturers Association
Provided by IHS under license with NEMA
No reproduction or networking permitted without license from IHS
Not for Resale

Section 2
COPPER BONDED GROUND RODS

2.1 STEEL CORE PROPERTIES

Upon inspection of the steel core, there shall be minimal signs of pitting and erosion. There shall be no gashes or cracks that protrude slivers from the surface of the rod. The steel core, when tested in accordance with ASTM A370, shall have a tensile strength of no less than 80,000 pounds per square-inch and a Rockwell hardness of no less than B80.

2.2 COPPER THICKNESS

The copper thickness shall not be less than 0.010 inch for rods 0.50 inch or greater in diameter, and shall not be less than 0.005 inch for rods less than 0.50 inch in diameter. The copper thickness shall be measured with a properly calibrated eddy-current (electromagnetic) device.

2.3 LENGTH

Ground rods shall have a length as specified with a -0, +5/8 inch tolerance.

2.4 ROD DIAMETERS

Finished rods for the trade sizes listed in Table 2-1 shall fall within the specified diameter ranges.

Table 2-1
DIAMETER RANGES FOR COPPER BONDED GROUND RODS

	Diameter Range			
	Threaded		Threadless	
Trade Size	Minimum, Inches	Maximum, Inches	Minimum, Inches	Maximum, Inches
3/8	---	---	0.345	0.355
1/2	0.439	0.449	0.471	0.481
1/2*	0.500	0.507	0.500	0.510
5/8	0.555	0.565	0.555	0.565
3/4	0.673	0.683	0.673	0.683
1	0.907	0.917	0.907	0.917

*An "L" or "★" is typically used to indicate minimum 0.500 inch diameter

2.5 THREADS

Threads on copper bonded, sectional type ground rods shall be rolled onto both ends after copper bonding, and shall conform to the specifications in Figure 2-1.

Copyright National Electrical Manufacturers Association
Provided by IHS under license with NEMA
No reproduction or networking permitted without license from IHS
Not for Resale

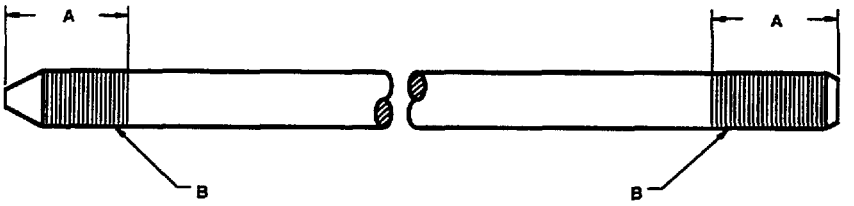

Figure 2-1
THREAD SPECIFICATIONS

Trade Size	Dimension A, Inches +1/8, -1/16	Thread B Typical
1/2	1-1/16	1/2-13 UNC 2B
1/2*	1-1/16	9/16-12 UNC 2B
5/8	1-3/16	5/8-11 UNC 2B
3/4	1-1/4	3/4-10 UNC 2B
1	1-11/16	1-8 UNC 2B

*An "L" or "★" is typically used to indicate minimum 0.500 inch diameter

2.6 END CONFIGURATIONS

The end configurations of a copper bonded ground rod shall be in accordance with Figure 2-2. The diameter of the penetrating (pointed) end of a copper bonded ground rod shall be as specified per Dimension A for each trade size. The length of the chamfer on the driving (blunt) end shall be as specified per Dimension B of Figure 2-2.

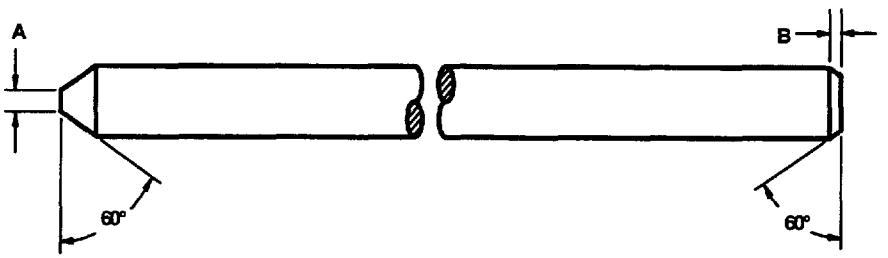

Figure 2-2
END POINT CONFIGURATIONS

Trade Size	Diameter of End Points	
	Dimension A, Maximum, Inches	Dimension B, Minimum, Inches
3/8	1/8	1/16
1/2	3/16	3/32
1/2*	3/16	3/32
5/8	3/16	1/8
3/4	1/4	1/8
1	3/8	7/32

*An "L" or "★" is typically used to indicate minimum 0.500 inch diameter

Copyright National Electrical Manufacturers Association
Provided by IHS under license with NEMA
No reproduction or networking permitted without license from IHS
Not for Resale

2.7 ADHESION

2.7.1 Test Method

An 18-inch length of rod with one end cut to a 45 degree point shall be driven between two steel clamping plates or the jaws of a vise set 0.04 inches less than the diameter of the rod, so as to shear off sufficient metal to expose the bond between the copper and the rod.

2.7.2 Evaluation

There shall be no evidence of separation of the copper and the steel core.

2.8 DUCTILITY

2.8.1 Test Method

At room temperature (25°C ± 5°C), a length of rod shall be rigidly held in a clamp or vise and the free end bent by applying a force normal to the rod at a distance from the clamping device equal to 40 times the rod diameter. The magnitude of the force and the direction of application shall be such that the rod is permanently bent through a 90-degree angle.

2.8.2 Evaluation

There shall be no evidence of cracking of the copper.

2.9 SURFACE CONDITION

The surface of a ground rod shall be smooth and free from blisters, slivers, and other types of projections.

2.10 STRAIGHTNESS

The deviation from straight for any rod shall be determined and evaluated in accordance with the following:

2.10.1 Test Method

The selected rod shall be supported by two "V" blocks, with a dial feeler gage located at the mid-point of the "V" blocks in accordance with Figure 2-3. While rotating the ground rod by hand, the maximum and minimum readings shall be recorded. The readings are then subtracted for the total deviation. The average deviation from straight for the length of the ground rod located between the "V" blocks is determined by the following formula:

$$\frac{\text{Maximum Deviation (inches)} - \text{Minimum Deviation (inches)}}{2 \times 3 \text{ feet}}$$

Copyright National Electrical Manufacturers Association
Provided by IHS under license with NEMA
No reproduction or networking permitted without license from IHS
Not for Resale

2.10.2 Evaluation

Straightness of the ground rod shall not vary more than 0.010 inches per foot.

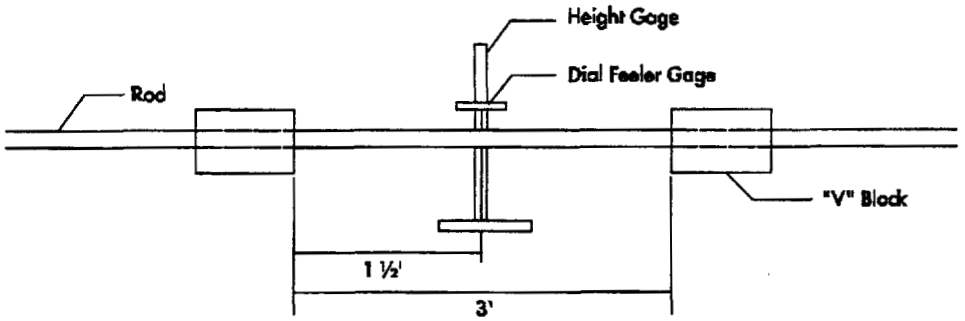

Figure 2-3
APPARATUS FOR STRAIGHTNESS TEST

2.11 MARKINGS

A ground rod shall be permanently and legibly marked with the manufacturer's identification, country of origin, and the catalog or equivalent designation, within 12 inches of the driving end of the ground rod.

Copyright National Electrical Manufacturers Association
Provided by IHS under license with NEMA
No reproduction or networking permitted without license from IHS
Not for Resale

Section 3
ZINC COATED GROUND RODS

3.1 STEEL CORE PROPERTIES

Upon inspection of the steel core, there shall be minimal signs of pitting and erosion. There shall be no gashes or cracks that protrude slivers from the surface of the rod. The steel core, when tested in accordance with ASTM A 370, shall have a tensile strength of no less than 70,000 pounds per square inch.

3.2 ZINC COATING

3.2.1 Coating Method

All ground rods manufactured in accordance with this section shall be coated utilizing a method in accordance with applicable ASTM standards. Hot dip galvanized ground rods shall be manufactured in accordance with ASTM A 123. Electroplated ground rods shall be manufactured per ASTM B 633.

3.2.2 Thickness

The zinc deposit thickness shall not be less than 0.0034 inch.

3.2.3 Measurement

The measurement for zinc thickness should be made with a properly calibrated eddy-current (electromagnetic) device. The device shall be used in accordance with the manufacturer's instructions, and by following the standard practice for measuring coating thickness described in ASTM E 376.

3.3 LENGTH

Ground rods shall have a length as specified with a -0, +5/8 inch tolerance.

3.4 ROD DIAMETERS

Finished rods for the trade sizes listed in Table 3-1 shall fall within the specified diameter ranges.

Table 3-1
DIAMETER RANGES FOR ZINC COATED GROUND RODS

Trade Size	Diameter Range, Inches	
	Minimum	Maximum
1/2	0.500	0.514
5/8	0.600	0.614
3/4	0.725	0.739
1	0.975	0.989

3.5 ADHESION

The zinc coating shall withstand handling consistent with the nature and thickness of the coating and the normal use of the ground rod, without peeling or flaking.

Copyright National Electrical Manufacturers Association
Provided by IHS under license with NEMA
No reproduction or networking permitted without license from IHS
Not for Resale

3.5.1 Test Method

Proper adhesion of the zinc coating to the base metal surface shall be determined by cutting or prying with the point of a stout knife, applied with a pressure sufficient to remove a portion of the coating.

3.5.2 Evaluation

Adhesion shall be considered inadequate if flaking occurs, exposing the base metal in advance of the knife point. Adhesion shall not be evaluated at edges or corners.

3.6 FINISH

The surface of rods shall be uniform in appearance, clean, and free of visible coating defects, such as blisters, flux, inclusions, pits, roughness, slivers, sharp spikes, nodules, bare spots, burning, cracks, or unplated areas, and other defects that may affect function of the coating. The coating shall not be stained or discolored. However, superficial staining that results from rinsing or slight discoloration resulting from any drying or baking operation to relieve hydrogen embrittlement shall be acceptable.

3.7 STRAIGHTNESS

The deviation from straight for any rod shall be determined and evaluated as follows:

3.7.1 Test Method

Rods shall be prepared for straightness testing in accordance with 2.10.1.

3.7.2 Evaluation

Straightness of the rod shall not vary more than 0.010 inches per foot.

3.8 END CONFIGURATIONS

End configurations shall be in accordance with Figure 3-1. The diameter of the penetrating (pointed) end of the rod shall be as specified per Dimension A for each trade size. The length of the chamfer on the driving (blunt) end shall be as specified per Dimension B of Figure 3-1.

3.9 MARKINGS

The identification of the manufacturer and country of origin shall be permanently and legibly marked within 12 inches of the driving end of the ground rod.

Copyright National Electrical Manufacturers Association
Provided by IHS under license with NEMA
No reproduction or networking permitted without license from IHS
Not for Resale

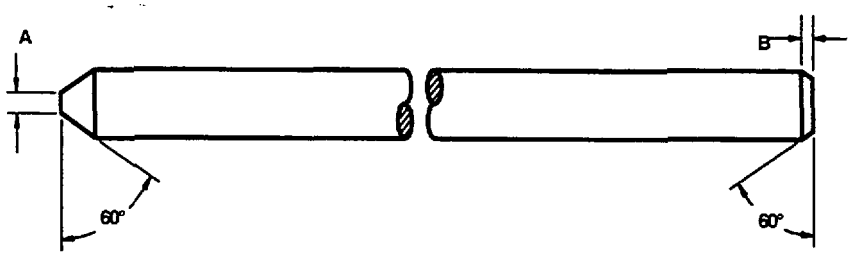

Figure 3-1
END POINT CONFIGURATIONS

Trade Size	Diameter of End Points	
	Dimension A Maximum, Inches	Dimension B Minimum, Inches
1/2	7/32	3/32
5/8	7/32	1/8
3/4	9/32	1/8
1	13/32	7/32

Copyright National Electrical Manufacturers Association
Provided by IHS under license with NEMA
No reproduction or networking permitted without license from IHS
Not for Resale

Section 4
COUPLINGS FOR COPPER BONDED GROUND RODS

4.1 PHYSICAL PROPERTIES

4.1.1 Surface Condition

The surface of the coupling shall be smooth and free of cracks, burrs, or sharp corners.

4.1.2 Material

Coupling material shall be copper, or a copper alloy containing not less than 80% copper, and shall be suitable for burial in earth.

4.2 CONSTRUCTION

4.2.1 Length

The length of threaded couplings shall be sufficient to cover the threaded portion of two coupled ground rods. In addition, the lengths of both threaded and threadless couplings shall be sufficient to meet the performance requirements of Section 4.3 of this standard.

4.2.2 Application Diameter

4.2.2.1 Threaded Ground Rod Couplings

A threaded coupling shall be symmetrical and shall accept threaded ground rods of the trade sizes in Table 4-1.

Table 4-1
COUPLING THREAD SIZES FOR THREADED COPPER BONDED GROUND RODS

Trade Size	Thread Designation
1/2	1/2-13 UNC 2B
1/2*	9/16-12 UNC 2B
5/8	5/8-11 UNC 2B
3/4	3/4-10 UNC 2B
1	1-8 UNC 2B

*An "L" or "★" is typically used to indicate minimum 0.500 inch diameter

4.2.2.2 Threadless Ground Rod Couplings

A threadless ground rod coupling shall be symmetrical and shall accept threadless ground rods of the trade sizes in Table 4-2.

Previous page is blank

Copyright National Electrical Manufacturers Association
Provided by IHS under license with NEMA
No reproduction or networking permitted without license from IHS
Not for Resale

Table 4-2
APPLICATION DIAMETERS FOR THREADLESS COUPLINGS FOR THREADLESS COPPER BONDED GROUND RODS

Trade Size	Application Diameter, Inches
1/2	0.471 – 0.481
1/2*	0.500 – 0.510
5/8	0.555 – 0.565
3/4	0.673 – 0.683
1	0.907 – 0.917

*An "L" or "★" is typically used to indicate minimum 0.500 inch diameter

4.3 PERFORMANCE

4.3.1 Conductivity

When used to join two ground rods of the minimum diameters specified in Table 2-1, couplings shall provide to joined rods, no less than 95% of the conductivity of an unspliced rod of equal length.

4.3.2 Impact

4.3.2.1 Test Method

Two 18 inch rods of the diameters specified in Table 2-1, shall be coupled and held vertically in a tubular fixture that is at least 0.010 in. greater than the rod diameter. The penetrating end of the bottom rod shall be rested on a fixed plate of a weight sufficient to withstand the test impact, and located in a hole at least 4 inches in depth. The top rod shall be subjected to an impact force of 40 foot-pounds.

4.3.2.2 Evaluation

After 25 impacts, couplings shall not break, split, or be subjected to damage that impairs performance.

4.3.3 Pullout

When used to join two rods of the minimum diameters specified in Table 2-1, the joined coupling and rod must withstand a pullout force of no less than 1500 pounds before separation.

4.3.4 Bend

4.3.4.1 Test Method

Two ground rods coupled together shall be subjected to the same bending requirements as an individual ground rod. The test specimen shall be gripped in a suitable rigid clamp or vise and the rod bent by applying a force normal to the rod, at a distance of 40 times the ground rod diameter from the clamping device. The coupling shall be located midway between the clamping device and the point of applied force. The force shall be applied until the rod is permanently bent through an angle of 90 degrees.

Copyright National Electrical Manufacturers Association
Provided by IHS under license with NEMA
No reproduction or networking permitted without license from IHS
Not for Resale

4.3.4.2 Evaluation

The coupling shall not exhibit any signs of cracking or separation from the ground rod.

4.3.5 Mechanical Strength

Couplings shall provide sufficient mechanical strength to permit driving under normal conditions, and not exhibit deformation or splitting under such conditions.

4.4 MARKINGS

Each container, packaged as required by the end user, shall be marked with the manufacturer's name or trademark, and trade size. Each coupling shall be marked with the manufacturer's name or trademark and trade size.

Copyright National Electrical Manufacturers Association
Provided by IHS under license with NEMA
No reproduction or networking permitted without license from IHS

Not for Resale



NATIONAL ELECTRICAL MANUFACTURERS ASSOCIATION • 1300 NORTH 17TH STREET • SUITE 1847 • ROSSLYN, VA 22209

Copyright National Electrical Manufacturers Association
Provided by IHS under license with NEMA
No reproduction or networking permitted without license from IHS
Not for Resale