STD.NEMA FU 1-ENGL 1986 ■ 6470247 0527020 956 ■

ANSI/NEMA STANDARDS PUBLICATION FU 1

nema

Low Voltage Cartridge Fuses

NEMA

NATIONAL ELECTRICAL MANUFACTURERS ASSOCIATION ■ 2101 L STREET, N.W., WASHINGTON, D.C. 20037

Copyright National Electrical Manufacturers Association
Provided by IHS under license with NEMA
No reproduction or networking permitted without license from IHS

Not for Resale

NEMA Standards Publication FU 1-1986 (R1996)

Low Voltage Cartridge Fuses

Published by:

National Electrical Manufacturers Association
1300 North 17th Street
Rosslyn, VA 22209

© Copyright 1999 by the National Electrical Manufacturers Association. All rights including translation into other languages, reserved under the Universal Copyright Convention, the Berne Convention for the Protection of Literary and Artistic Works, and the International and Pan American Copyright Conventions.

Copyright National Electrical Manufacturers Association
Provided by IHS under license with NEMA
No reproduction or networking permitted without license from IHS

Not for Resale

STD.NEMA FU 1-ENGL 1986 ■ 6470247 0527022 729 ■

FU 1

LOW VOLTAGE CARTRIDGE FUSES

ANSI Approved on June 4, 1987

Published by

National Electrical Manufacturers Association
2101 L Street, NW
Washington, DC 20037
(202) 457-8400

© 1987 by National Electrical Manufacturers Association

Copyright National Electrical Manufacturers Association
Provided by IHS under license with NEMA
No reproduction or networking permitted without license from IHS

Not for Resale

Table of Contents

		Page
	FOREWORD	i
	SCOPE	ii
Section 1	DEFINITIONS	1
Section 2	SERVICE CONDITIONS	3
Section 3	RATINGS	4
Section 4	FUSE CLASSES	7
Section 5	PERFORMANCE	
	General	18
	Current Carrying Capacity and Temperature Rise Tests	18
	Overload Opening Time	21
	Interrupting Tests at Rated Voltage	23
	Maximum Energy	30
	Maximum Threshold Ratio	30
	Direct Current Tests	30
Tables	Table 3-1 Current Ratings of Non-Time-Delay Fuses	4
	Table 3-2 Current Ratings of Time-Delay Fuses	5
	Table 3-3 AC Voltage Ratings—Time-Delay and Non-Time-Delay Fuses	6
	Table 3-4 DC Voltage Ratings—Time-Delay and Non-Time-Delay Fuses	6
	Table 3-5 AC Interrupting Ratings—Time-Delay and Non-Time-Delay Fuses	6
	Table 3-6 DC Interrupting Ratings—Time-Delay and Non-Time-Delay Fuses	6
	Table 4-1 Summary of Fuse Classes	8
	Table 4-2 Dimensions of Class G Fuses	9
	Table 4-3 Dimensions of Class H and K Fuses	10
	Table 4-4 Dimensions of Class J Fuses	11
	Table 4-5 Dimensions of Class L Fuses	12
	Table 4-6 Dimensions of Ferrule Type Class R Fuses	13
	Table 4-7 Dimensions of Knife Blade Type Class R Fuses	14
	Table 4-8 Dimensions of Ferrule Type Class T Fuses	15
	Table 4-9 Dimensions of Knife Blade Type Class T Fuses	16
	Table 4-10 Dimensions of Class CC Fuses	17
	Table 5-1 Maximum Temperature Rises (Classes H, K and R Fuses)	19
	Table 5-2 Maxiumum Temperature Rises (Classes CC, G, J and T Fuses)	19
	Table 5-3 Test Conductors	20
	Table 5-4 Bus Bar Cross-Section and Shorting Bar Temperature Rises	21
	Table 5-5 Overload Opening Time (Classes CC and G Fuses)	21
	Table 5-6 Overload Opening Time (Classes H, J, K, L, R and T Fuses)	22
	Table 5-7 Test Levels for High Interrupting Rating Fuses (Above 10 kA)	23
	Table 5-8 Maximum Peak Let-through Current I_p and Clearing I^2t (Class CC Fuses)	24
	Table 5-9 Maximum Peak Let-through Current I_p and Clearing I^2t (Class G Fuses)	24
	Table 5-10 Maximum Peak Let-through Current I_p and Clearing I^2t (Class J Fuses)	25
	Table 5-11 Maximum Peak Let-through Current I_p and Clearing I^2t (Class K Fuses)	26
	Table 5-12 Maximum Peak Let-through Current I_p and Clearing I^2t (Class RK1 Fuses)	26
	Table 5-13 Maximum Peak Let-through Current I_p and Clearing I^2t (Class RK5 Fuses)	26

Copyright National Electrical Manufacturers Association
Provided by IHS under license with NEMA
No reproduction or networking permitted without license from IHS
Not for Resale

Table of Contents *(continued)*

Table 5-14 Maximum Peak Let-through Current I_p and Clearing I^2t (Class L Fuses).... 27
Table 5-15 Maximum Peak Let-through Current I_p and Clearing I^2t (Class J Fuses).... 28
Table 5-16 Maximum Peak Let-through Current I_p and Clearing I^2t (Class T Fuses).... 29
Table 5-17 Maximum Threshold Ratios..... 30
Table 5-18 Maximum Time Constants..... 30

Copyright National Electrical Manufacturers Association
Provided by IHS under license with NEMA
No reproduction or networking permitted without license from IHS
Not for Resale

Foreword

These standards have been developed by the Low Voltage Fuse Section of NEMA. The purpose of this Standards Publication is to assist in the proper selection and application of the different classes of low voltage cartridge fuses. User needs have been considered throughout the development of these standards. Comments or recommended revisions are welcome and should be submitted to:

Manager, Engineering Department
National Electrical Manufacturers Association
2101 L Street, NW, Suite 300
Washington, DC 20037

Copyright National Electrical Manufacturers Association
Provided by IHS under license with NEMA
No reproduction or networking permitted without license from IHS
Not for Resale

Scope

This Standards Publication covers the following classes of fuses:

G, H, J, K, L, R, T and CC low voltage cartridge fuses rated 600 volts or less, alternating current and direct current.

Copyright National Electrical Manufacturers Association
Provided by IHS under license with NEMA
No reproduction or networking permitted without license from IHS
Not for Resale

LOW VOLTAGE CARTRIDGE FUSES

Section 1

DEFINITIONS

AMBIENT TEMPERATURE.

The temperature of the air surrounding the fuse.

ARCING TIME.

The amount of time that passes from the instant the fuse element or link has melted until the overcurrent is interrupted or cleared.

BODY.

The part of the fuse which encloses the fuse elements and supports the contacts. Also referred to as cartridge, tube or case.

CARTRIDGE FUSE.

A fuse consisting of a current responsive element inside a fuse body with contacts on both ends.

CARTRIDGE SIZE.

The range of voltage and ampere ratings assigned to a cartridge of specific dimensions and shape.

CLEARING I^2t (Ampere Squared Seconds).

The measure of heat energy developed as a result of current flow between the time that current begins to flow and until the fuse clears the circuit. "I^2" stands for the square of the effective (rms) let-through current and "t" stands for the time of current flow in seconds. The term I^2t also applies during the melting or arcing portions of the clearing time and is referred to as melting or arcing I^2t respectively. Clearing I^2t is the sum of melting I^2t and arcing I^2t.

CONTACTS.

The external metallic parts of the fuse used to complete the circuit. Also referred to as ferrules, caps, blades, or terminals.

CURRENT-LIMITING FUSE.

A fuse that interrupts all available overcurrents within its interrupting rating and, within its current-limiting range, limits the clearing time at rated voltage to an interval equal to or less than the first major or symmetrical current loop duration; and limits peak let-through current to a value less than the available peak current.

CURRENT-LIMITING RANGE.

A range of available currents from the threshold current to the interrupting current rating of a fuse.

CURRENT RATING.

The ac or dc ampere rating which the fuse is capable of carrying continuously under specified conditions.

ELEMENT.

The fusible portion of the fuse which melts, or reacts by other means, to clear the circuit during an overcurrent condition. Also referred to as a link.

FILLER.

A material used to fill a section or sections of a fuse which aids in arc extinction.

FUSE.

A protective device which opens by the melting of a current-sensitive element during specified overcurrent conditions.

INTERRUPTING RATING.

A rating based upon the highest rms alternating current or direct current which the fuse is required to interrupt under specified conditions.

MAXIMUM ENERGY.

A condition under which, in a specified time, the maximum amount of heat possible is generated in the fuse before clearing.

MELTING TIME.

The time from the initiation of an overcurrent to the instant arcing begins inside a fuse.

NONRENEWABLE FUSE.

A fuse which cannot be restored for service after operation.

NORMAL FREQUENCY RECOVERY VOLTAGE.

The normal frequency rms voltage impressed upon the fuse after the circuit has been interrupted and after high

Copyright National Electrical Manufacturers Association
Provided by IHS under license with NEMA
No reproduction or networking permitted without license from IHS
Not for Resale

frequency transients have subsided.

OVERCURRENT.

Any current in excess of the fuse current rating.

PEAK ARC VOLTAGE.

The maximum peak voltage across the fuse during the arcing time.

PEAK LET-THROUGH CURRENT I_p.

The maximum instantaneous current through a fuse during interruption in its current-limiting range.

RATING.

A designated limit of operating characteristics based on definite conditions.

REJECTION FEATURE.

The physical characteristics of a fuse and fuse holder (slot, groove, pin, or overall dimension) which prevents substitution by other classes of fuses.

RENEWAL ELEMENT (Renewal Link).

That part of a renewable fuse that is replaced after each interruption to restore the fuse to operating condition.

RENEWABLE FUSE.

A fuse which can be readily restored for service after operation by the replacement of the renewal elements.

THRESHOLD CURRENT.

The minimum rms symmetrical available current of the current-limiting range, where melting of the fuse element occurs at approximately 90 degrees on the symmetrical current wave, and total clearing time is less than one-half cycle.

THRESHOLD RATIO.

The threshold current divided by the fuse current rating.

TIME-DELAY FUSE.

A fuse capable of carrying a specific overcurrent for a minimum time.

VOLTAGE RATING.

The maximum rms ac voltage or the maximum dc voltage at which the fuse is designed to operate.

NEMA Standard 8-20-1986.

Copyright National Electrical Manufacturers Association
Provided by IHS under license with NEMA
No reproduction or networking permitted without license from IHS
Not for Resale

Section 2

SERVICE CONDITIONS

2.1 USUAL SERVICE CONDITIONS

Fuses conforming to these standards shall operate indoors within their ratings provided:

1. The temperature of the air surrounding the fuse is within the range of −40 °C to +55 °C whether or not the fuse is in an enclosure.
2. The altitude does not exceed 10,000 feet (3030 m).

NEMA Standard 8-20-1986.

2.2 UNUSUAL SERVICE CONDITIONS

For unusual service conditions the manufacturer should be consulted.

Authorized Engineering Information 8-20-1986.

Copyright National Electrical Manufacturers Association
Provided by IHS under license with NEMA
No reproduction or networking permitted without license from IHS

Not for Resale

Section 3

RATINGS

3.1 CURRENT RATINGS OF NON TIME-DELAY FUSES

The current ratings of Non Time-Delay fuses shall be as shown in Table 3-1.

NEMA Standard 8-20-1986.

TABLE 3-1
Current Ratings of Non Time-Delay Fuses

Cartridge Size (Amperes)	Current Ratings (Amperes)
0-30	1, 3, 6, 10, 15, 20, 25, 30
31-60	35, 40, 45, 50, 60
61-100	70, 80, 90, 100
101-200	110, 125, 150, 175, 200
201-400	225, 250, 300, 350, 400
401-600	450, 500, 600
601-800	601, 700, 800
801-1200	1000, 1200
1201-1600	1600
1601-2000	2000
2001-2500	2500
2501-3000	3000
3001-4000	4000
4001-5000	5000
5001-6000	6000

Copyright National Electrical Manufacturers Association
Provided by IHS under license with NEMA
No reproduction or networking permitted without license from IHS
Not for Resale

3.2 CURRENT RATINGS OF TIME-DELAY FUSES

The current ratings of Time-Delay fuses shall be as shown in Table 3-2.

NEMA Standard 8-20-1986.

Table 3-2
Current Ratings of Time-Delay Fuses

Cartridge Size (Amperes)	Current Ratings (Amperes)
0-30	$^{1}/_{10}$, $^{15}/_{100}$, $^{2}/_{10}$, $^{3}/_{10}$, $^{4}/_{10}$, ½, $^{6}/_{10}$, $^{8}/_{10}$, 1, $1^{1}/_{8}$, 1¼, $1^{4}/_{10}$, $1^{6}/_{10}$, $1^{8}/_{10}$, 2, 2¼, 2½, $2^{8}/_{10}$, 3, $3^{2}/_{10}$, 3½, 4, 4½, 5, $5^{6}/_{10}$, 6, 6¼, 7, 8, 9, 10, 12, 15, 17½, 20, 25, 30
31-60	35, 40, 45, 50, 60
61-100	70, 80, 90, 100
101-200	110, 125, 150, 175, 200
201-400	225, 250, 300, 350, 400
401-600	450, 500, 600
601-800	601, 700, 800
801-1200	1000, 1200
1201-1600	1600
1601-2000	2000
2001-2500	2500
2501-3000	3000
3001-4000	4000
4001-5000	5000
5001-6000	6000

Copyright National Electrical Manufacturers Association
Provided by IHS under license with NEMA
No reproduction or networking permitted without license from IHS

Not for Resale

3.3 The alternating current voltage ratings for time-delay and non-time-delay fuses shall be as shown in Table 3-3.

NEMA Standard 8-20-1986.

Table 3-3
AC VOLTAGE RATINGS—TIME-DELAY AND NON-TIME-DELAY FUSES

250 V
300 V
600 V

3.4 The direct current voltage ratings for time delay and non-time-delay fuses shall be as shown in Table 3-4.

NEMA Standard 8-20-1986.

Table 3-4
DC VOLTAGE RATINGS—TIME-DELAY AND NON-TIME-DELAY FUSES

125 V
250 V
300 V
500 V
600 V

3.5 The alternating current interrupting ratings for time-delay and non-time-delay fuses in ac amperes shall be as shown in Table 3-5.

NEMA Standard 8-20-1986.

Table 3-5
AC INTERRUPTING RATINGS—TIME-DELAY AND NON-TIME-DELAY FUSES

10,000 A
50,000 A
100,000 A
200,000 A

3.6 The direct current interrupting ratings for time-delay and non-time-delay fuses in dc amperes shall be as shown in Table 3-6.

NEMA Standard 8-20-1986.

Table 3-6
DC INTERRUPTING RATINGS—TIME-DELAY AND NON-TIME-DELAY FUSES

10,000 A
20,000 A
50,000 A
100,000 A
150,000 A

3.7 The alternating current frequency rating shall be 60 Hertz.

NEMA Standard 8-20-1986.

Copyright National Electrical Manufacturers Association
Provided by IHS under license with NEMA
No reproduction or networking permitted without license from IHS
Not for Resale

Section 4

FUSE CLASSES

4.1 SUMMARY OF FUSE CLASSES

Fuse classes and alternating current shall be as shown in Table 4-1.

NEMA Standard 8-20-1986.

Fuses which have both ac and dc ratings may have dc voltage and interrupting ratings different from their ac ratings.

Authorized Engineering Information 8-20-1986.

4.2 CLASS G FUSES (CURRENT-LIMITING) 0-60 AMPERES, 300 VOLTS, ALTERNATING CURRENT

Class G fuses shall have specific physical dimensions which make them non-interchangeable with other classes of fuses. Class G fuses shall be used on circuits 300 volts or less and on 480Y/277 volt ac grounded systems. Class G fuses shall have an interrupting rating of 100,000 amperes rms symmetrical. Class G fuses shall be either time-delay or non-time-delay. Dimensions shall be as shown in Table 4-2.

NEMA Standard 8-20-1986.

4.3 CLASS H FUSES 0-600 AMPERES, 250 AND 600 VOLTS, ALTERNATING CURRENT

Class H fuses shall have an interrupting rating of 10,000 amperes rms symmetrical. Class H fuses shall be either nonrenewable or renewable. Class H fuses shall be either time-delay or non-time-delay. Dimensions shall be as shown in Table 4-3.

NEMA Standard 8-20-1986.

4.4 CLASS J FUSES (CURRENT-LIMITING) 0-600 AMPERES, 600 VOLTS, ALTERNATING CURRENT

Class J fuses shall have specific physical dimensions which make them non-interchangeable with other classes of fuses. Class J fuses shall have an interrupting rating of 200,000 amperes rms symmetrical. Class J fuses shall provide a high degree of current limitation and shall be either time-delay or non-time-delay. Dimensions shall be as shown in Table 4-4.

NEMA Standard 8-20-1986.

4.5 CLASS K FUSES (CURRENT-LIMITING) 0-600 AMPERES, 250 and 600 VOLTS, ALTERNATING CURRENT

Class K fuses shall be dimensionally interchangeable with Class H fuses; however, Class K fuses shall have interrupting ratings of 50,000, 100,000 or 200,000 amperes rms symmetrical. Class K fuses shall have two current-limiting categories: K1 and K5, and shall be either time-delay or non-time-delay. Dimensions shall be as shown in Table 4-3.

NEMA Standard 8-20-1986.

4.6 CLASS L FUSES (CURRENT-LIMITING) 601-6000 AMPERES, 600 VOLTS, ALTERNATING CURRENT

Class L fuses shall have specific physical dimensions which make them non-interchangeable with other classes of fuses. Class L fuses shall have bolt-on terminals and have an interrupting rating of 200,000 amperes rms symmetrical. Dimensions shall be as shown in Table 4-5.

NEMA Standard 8-20-1986.

4.7 CLASS R FUSES (CURRENT-LIMITING) 0-600 AMPERES, 250 AND 600 VOLTS, ALTERNATING CURRENT

Class R fuses shall have an interrupting rating of 200,000 amperes rms symmetrical. These fuses are identical in size to Class H and Class K fuses except they shall have a rejection feature. Class R fuses can be installed in equipment using Classes H, K or R fuseholders. Classes H and K fuses are rejected by equipment designed for Class R fuses. Class R fuses shall have two current-limiting categories RK1 and RK5, and shall be either time-delay or non-time-delay. Dimensions shall be as shown in Tables 4-6 and 4-7.

NEMA Standard 8-20-1986.

4.8 CLASS T FUSES (CURRENT-LIMITING) 0-1200 AMPERES, 300 VOLTS, ALTERNATING CURRENT; AND 0-800 AMPERES, 600 VOLTS, ALTERNATING CURRENT

Class T fuses shall have specific physical dimensions which make them non-interchangeable with other classes

Copyright National Electrical Manufacturers Association
Provided by IHS under license with NEMA
No reproduction or networking permitted without license from IHS
Not for Resale

Table 4-1
SUMMARY OF FUSE CLASSES AND ALTERNATING CURRENT RATINGS*

TABLE	Class	Ampere Range	AC Voltage Rating	AC Interrupting Rating, RMS Symmetrical (KA = 1000 Amps)	Rejection Feature
4-2	G	0-60	300	100 KA	X
4-3	H	0-600	250 & 600	10 KA	—
4-4	J	0-600	600	200 KA	X
4-3	K	0-600	250 & 600	50, 100 or 200 KA	—
4-5	L	601-6000	600	200 KA	X
4-6	R	0-60	250 & 600	200 KA	X
4-7	R	61-600	250 & 600	200 KA	X
4-8	T	0-60	300 & 600	200 KA	X
4-9	T	61-1200	300	200 KA	X
4-9	T	61-800	600	200 KA	X
4-10	CC	0-30	600	200 KA	X

*For direct current ratings, see Tables 3-4 and 3-6.

of fuses. Class T fuses shall have an interrupting rating of 200,000 amperes rms symmetrical. Class T 300 volt fuses are used on circuits 300 volts ac or less, and on 480Y/277 volts ac grounded systems. Class T 600 volt fuses are used on circuits 600 volts or less. Class T fuses shall be either time-delay or non-time-delay. Dimensions shall be as shown in Tables 4-8 and 4-9.

NEMA Standard 8-20-1986.

4.9 CLASS CC FUSES (CURRENT-LIMITING) 0-30 AMPERES, 600 VOLTS, ALTERNATING CURRENT

Class CC fuses shall have specific physical dimensions which make them non-interchangeable with other classes of fuses. Class CC fuses shall have an interrupting rating of 200,000 amperes rms symmetrical, and have a rejection feature. Class CC fuses shall be either time-delay or non-time-delay. Dimensions shall be as shown in Table 4-10.

NEMA Standard 8-20-1986.

Copyright National Electrical Manufacturers Association
Provided by IHS under license with NEMA
No reproduction or networking permitted without license from IHS
Not for Resale

Table 4-2
DIMENSIONS[a] OF CLASS G FUSES IN INCHES (mm)

Rating		Overall Length of Fuse	Maximum Outside Diameter of Body	Minimum Length of Ferrule	Outside Diameter of Ferrule
Volts	Amps	A	B	C	D
300	0-15	1.31 (33.3)	0.38 (9.5)	0.28 (7.1)	0.406 (10.31)
300	16-20	1.41 (35.7)	0.38 (9.5)	0.28 (7.1)	0.406 (10.31)
300	21-30	1.62 (41.3)	0.38 (9.5)	0.28 (7.1)	0.406 (10.31)
300	31-60	2.25 (57.1)	0.38 (9.5)	0.50 (12.7)	0.406 (10.31)

[a]Tolerances: A, ±0.03 inch (±0.8 mm); D, ±0.006 inch (±0.15 mm)

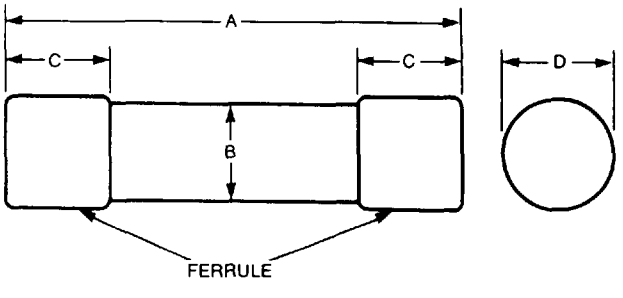

Copyright National Electrical Manufacturers Association
Provided by IHS under license with NEMA
No reproduction or networking permitted without license from IHS
Not for Resale

Table 4-3
DIMENSIONS[a] OF CLASS H AND K FUSES IN INCHES (mm)

Rating		Overall Length of Fuse	Minimum Length of Ferrule or Blade	Outside Diameter of Ferrule	Thickness of Blade	Width of Blade	Maximum Dimensions Over Projections[b]		Minimum Overall Length of Cylindrical Body[c]
Volts	Amperes						Measured Parallel to Blade	Measured at Right Angles to Blade	
		A	B	C	D	E	F	G	H
250	0-30	2.00 (50.8)	0.50 (12.7)	0.562 (14.27)					
	31-60	3.00 (76.2)	0.625 (15.9)	0.812 (20.62)					
	61-100	5.87 (149.2)	1.00 (25.4)		0.125 (3.18)	0.750 (19.05)	0.66 (16.7)	0.59 (15.1)	3.37 (85.6)
	101-200	7.12 (181.0)	1.37 (34.9)		0.188 (4.78)	1.125 (28.58)	0.94 (23.8)	0.84 (21.4)	4.12 (104.8)
	201-400	8.62 (291.1)	1.87 (47.6)		0.250 (6.35)	1.625 (41.28)	1.20 (30.6)	1.20 (30.6)	4.62 (117.5)
	401-600	10.37 (263.5)	2.25 (57.1)		0.250 (6.35)	2.000 (50.80)	1.45 (36.9)	1.45 (36.9)	5.19 (131.8)
600	0-30	5.00 (127.0)	0.50 (12.7)	0.812 (20.62)					
	31-60	5.50 (139.7)	0.62 (15.9)	1.062 (26.97)					
	61-100	7.87 (200.0)	1.00 (25.4)		0.125 (3.18)	0.750 (19.05)	0.78 (19.8)	0.72 (18.3)	5.37 (136.4)
	101-200	9.62 (244.5)	1.37 (34.9)		0.188 (4.78)	1.125 (28.58)	1.06 (27.0)	0.98 (25.0)	6.12 (155.6)
	201-400	11.62 (295.3)	1.87 (47.6)		0.250 (6.35)	1.625 (41.28)	1.45 (36.9)	1.45 (36.9)	7.12 (181.0)
	401-600	13.37 (339.7)	2.25 (57.1)		0.250 (6.35)	2.000 (5.08)	1.72 (43.7)	1.72 (43.7)	8.19 (208.0)

[a]Tolerances:
Column A: 0-60A, ±0.03 inch (±0.8 mm); 61-200A, ±0.06 inch (±1.6 mm); 201-600A, ±0.09 inch (±2.4 mm).
Column C: ±0.008 inch (±0.20 mm).
Column D: ±0.003 inch (±0.08 mm).
Column E: ±0.035 inch (±0.89 mm).

[b]The maximum overall dimension of a screw ring for a renewable fuse, the position of which with respect to the position of the knife blade cannot be predetermined, shall be no more than the value specified for dimension G.

[c]The length of the cylindrical body may be less than the indicated value if other acceptable interference means, pins through the blades, collars, and the like, are provided to prevent mounting the fuse in a fuseholder that will accommodate a fuse rated in the next lower bracket of current ratings. (This note has been approved as Authorized Engineering Information.)

FERRULE-TYPE CARTRIDGE FUSE 0 – 60 AMPERES

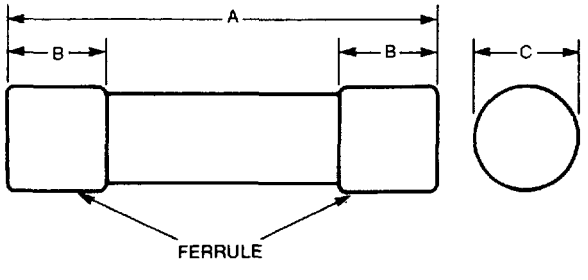

KNIFE-BLADE TYPE CARTRIDGE FUSE 61 – 600 AMPERES

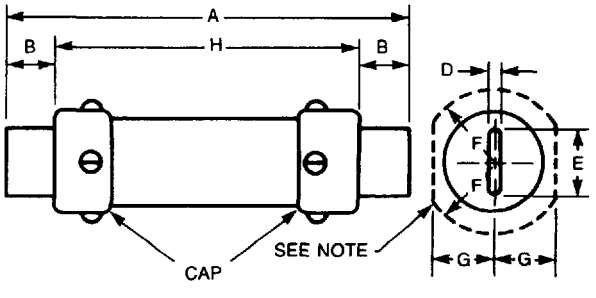

Note — The dash line represents the limit of the maximum projection of a screw, rivet head, or the like. It becomes a circle for a fuse rated at more than 200 A.

Copyright National Electrical Manufacturers Association
Provided by IHS under license with NEMA
No reproduction or networking permitted without license from IHS
Not for Resale

Table 4-4
DIMENSIONS[a] OF CLASS J FUSES IN INCHES (mm)

Amperes	Overall Length A	Distance Between Centers of Slot B	Outside Diameter[b] C	Width of Blades D	Thickness of Blades E	Minimum Length of Ferrule or Blades F	Distance From End of Blade to Center of Slot G	Width of Slot H	Length of Slot J	Length of Body K
0-30	2.25 (57.1)		0.50 (12.7)			0.812 (20.62)				
31-60	2.37 (60.3)		0.63 (15.9)			1.062 (26.97)				
61-100	4.62 (117.5)	3.62 (92.1)	1.13 (28.6)	0.750 (19.05)	0.125 (3.18)	1.00 (25.4)	0.50 (12.7)	0.281 (7.14)	0.375 (9.52)	2.62 (66.7)
101-200	5.75 (146.0)	4.38 (111.1)	1.63 (41.3)	1.125 (28.58)	0.188 (4.78)	1.37 (34.9)	0.69 (17.5)	0.281 (7.14)	0.375 (9.52)	3.00 (76.2)
201-400	7.12 (181.0)	5.25 (133.4)	2.13 (54.0)	1.625 (41.28)	0.250 (6.35)	1.87 (47.6)	0.94 23.8)	0.406 (10.32)	0.531 (13.49)	3.37 (85.7)
401-600	8.00 (203.2)	6.00 (152.4)	2.63 (66.7)	2.000 (50.80)	0.375 (9.52)	2.12 (54.0)	1.00 (25.4)	0.531 (13.49)	0.688 (17.48)	3.75 (95.2)

[a]Tolerances: 0-60 Amperes
Column A: ±0.03 inch (±0.8 mm)
Tolerances: 61-600 Amperes
Column A: ±0.09 inch (±2.4 mm)
Column B: ±0.06 inch (±1.6 mm)
Column D: ±0.035 inch (±0.89 mm)
Column E: ±0.003 inch (±0.08 mm)
Column G: ±0.03 inch (±0.8 mm)
Column H: ±0.005 inch (±0.13 mm)
Column J: Plus 0.0062, minus 0.000 inch (plus 1.57 mm, minus 0.00 mm)
Column K: ±0.03 inch (±0.8 mm)

[b]Tolerances: 0-60 Amperes: ±0.0008 inch (±0.20 mm); 61-600 Amperes: Maximum dimension over projection

FERRULE-TYPE FUSES—
0 – 60 AMPERES

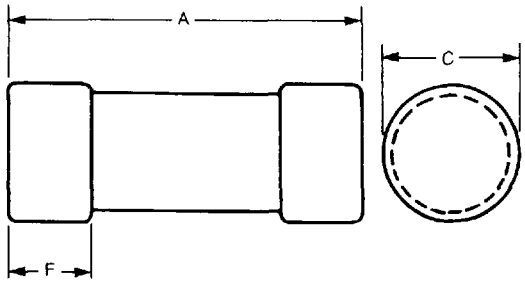

KNIFE-BLADE TYPE FUSES—
61 – 600 AMPERES

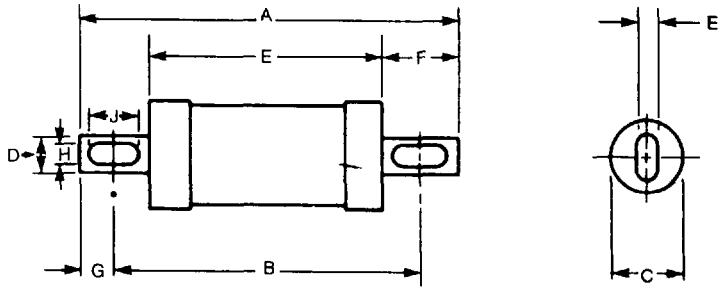

Copyright National Electrical Manufacturers Association
Provided by IHS under license with NEMA
No reproduction or networking permitted without license from IHS
Not for Resale

STD.NEMA FU 1-ENGL 1986 ■ 6470247 0527038 096 ■

Table 4-5
DIMENSIONS[a] OF CLASS L FUSES IN INCHES (mm)

Cartridge Size in Amperes	Maximum Diameter A	Width of Blades B	Thickness of Blades C	Overall Length D
601-800	2.53 (64.3)	2.0 (50.8)	0.375 (9.5)	8.63 (219.1)
801-1200	2.78 (70.6)	2.0 (50.8)	0.375 (9.5)	10.75 (273.0)
1201-1600	3.03 (77.0)	2.38 (60.3)	0.44 (11.1)	10.75 (273.0)
1601-2000	3.53 (89.7)	2.75 (69.8)	0.50 (12.7)	10.75 (273.0)
2001-2500	5.03 (127.8)	3.50 (88.9)	0.75 (19.0)	10.75 (273.0)
501-3000	5.03 (127.8)	4.0 (101.6)	0.75 (19.0)	10.75 (273.0)
3001-4000	5.78 (146.8)	4.75 (120.6)	0.75 (19.0)	10.75 (273.0)
4001-5000	7.16 (181.8)	5.25 (133.4)	1.0 (25.4)	10.75 (273.0)
5001-6000	7.16 (181.8)	5.75 (146.0)	1.0 (25.4)	10.75 (273.0)

[a]Tolerances: Column B: ±0.06 inch (±1.6 mm)
Column C: ±0.03 inch (±0.8 mm)
Column D: ±0.09 inch (±2.4 mm)

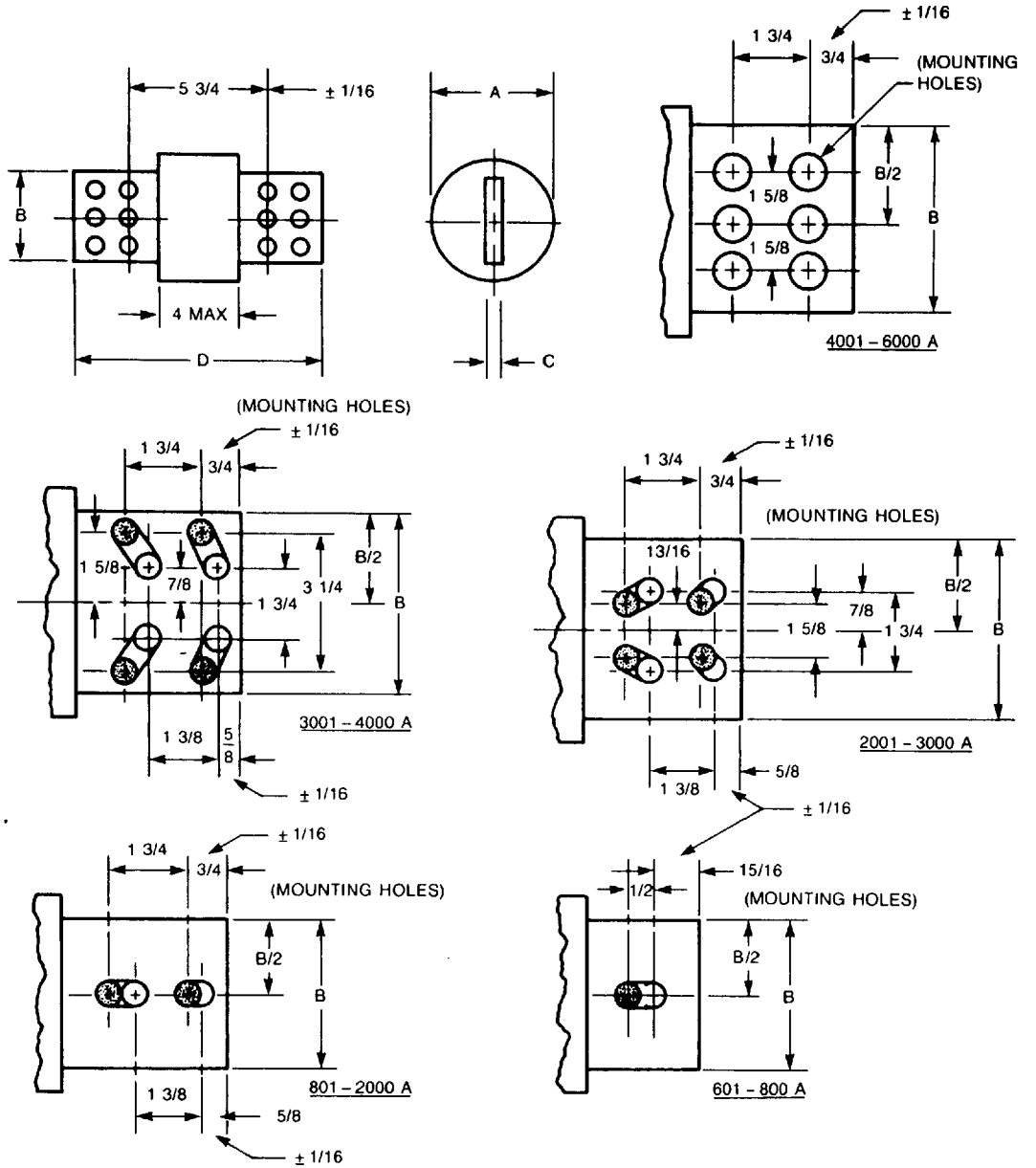

ALL TOLERANCES ARE ± 1/64 INCH UNLESS OTHERWISE NOTED.

5/8 ± 1/32 INCH SLOTS OR HOLES MAY BE USED. SHADED HOLES INDICATE DRILLING REQUIRED FOR CLASS "L" FUSE MOUNTING.

Not for Resale
Copyright National Electrical Manufacturers Association
Provided by IHS under license with NEMA
No reproduction or networking permitted without license from IHS

Table 4-6
DIMENSIONS[a] OF FERRULE TYPE CLASS R FUSES IN INCHES (mm)

Rating		Overall Length of Fuse	Minimum Length of Ferrule	Outside Diameter of Ferrule	Distance of Rejection Feature From End	Minimum Width of Rejection Feature[b]	Minimum-Maximum Depth of Rejection Feature	Maximum Width Toward End	Maximum Width Toward Body
Volts	Amperes								
		A	B	C	D	E	F	G	H
250	0-30	2.000	0.500	0.562	0.156	0.070	0.085-0.130	0.115	0.150
		(50.80)	(12.70)	(14.27)	(3.96)	(1.78)	(2.16-3.30)	(2.92)	(3.81)
	31-60	3.000	0.625	0.812	0.188	0.086	0.085-0130	0.123	0.170
		(76.20)	(15.88)	(20.62)	(4.78)	(2.18)	(2.16-3.30)	(3.12)	(4.32)
600	0-30	5.000	0.500	0.812	0.188	0.066	0.085-0.130	0.123	0.170
		(127.00)	(12.70)	(20.62)	(4.78)	(2.18)	(2.16-3.30)	(3.12)	(4.32)
	31-60	5.500	0.625	1.062	0.250	0.086	0.085-0.130	0.154	0.180
		(139.70)	(15.88)	(26.97)	(6.35)	(2.18)	(2.16-3.30)	(3.91)	(4.57)

[a]Tolerances

Column A: ±0.031 inch (±0.79 mm)

Column C: ±0.008 inch (±0.20 mm). To provide proper contact, the diameter of rejection ferrule end shall be equal to or not more than 0.050 inch (1.27 mm) smaller than actual diameter of main contact area for any fuse and no part of rejection ferrule end shall protrude beyond the diameter of the main part of the ferrule.

Column D: plus 0.008, minus 0.016 inch (plus 0.20, minus 0.41 mm).

[b]Column E: Distance between centers of 0.031 inch (0.79 mm) radius fillets. Shape of rejection groove is not specified but shall be completely within solid and dashed lines regardless of shape.

FERRULE TYPE 0 – 60 A

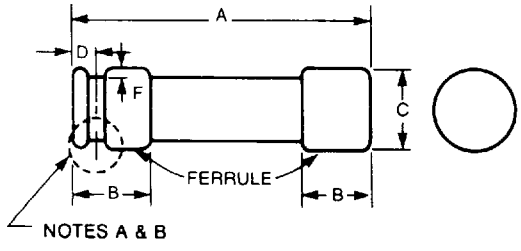

FERRULE TYPE REJECTION GROOVE DETAILS

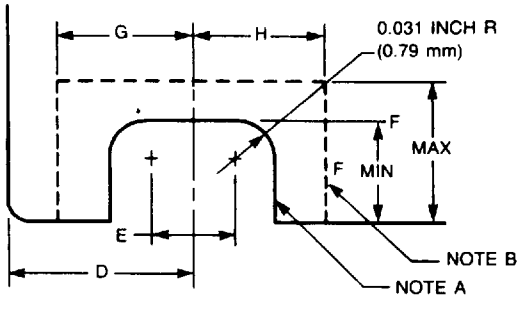

Note A — Solid line indicates location, shape and dimensions for minimum rejection groove.

Note B — Dashed line indicates location, shape and dimensions for maximum rejection groove.

Copyright National Electrical Manufacturers Association
Provided by IHS under license with NEMA
No reproduction or networking permitted without license from IHS

Not for Resale

Table 4-7
DIMENSIONS[a] OF KNIFE BLADE TYPE CLASS R FUSES IN INCHES (mm)

Rating Volts	Rating Amperes	Overall Length of Fuse	Minimum Length of Blade	Thickness of Blade	Width of Blade	Maximum Dimensions Over Projections: Measured Parallel to Blade	Maximum Dimensions Over Projections: Measured At Right Angles to Blade	Minimum-Maximum Overall Length of Cylindrical Body[b]	Distance of Rejection Feature from End	Width of Rejection Feature	Web Width of Blade at Rejection Feature
		A	B	C	D	E	F	G	H	I	J
250	61-100	5.875 (149.22)	1.000 (25.40)	0.125 (3.18)	0.750 (19.05)	0.656 (16.66)	0.594 (15.09)	3.375-3.781 (85.72-96.04)	0.500 (12.70)	0.281 (7.14)	0.250 (6.35)
	101-200	7.125 (180.98)	1.375 (34.92)	0.188 (4.78)	1.125 (28.58)	0.938 (23.83)	0.844 (21.44)	4.125-4.281 (104.78-108.74)	0.688 (17.48)	0.281 (7.14)	0.438 (11.13)
	201-400	8.625 (219.08)	1.875 (47.62)	0.250 (6.35)	1.625 (41.28)	1.203 (30.56)	1.203 (30.56)	4.625-4.813 (117.48-122.25)	0.938 (23.83)	0.406 (10.31)	0.625 (15.88)
	401-600	10.375 (263.52)	2.250 (57.15)	0.250 (6.35)	2.000 (50.80)	1.453 (36.91)	1.453 (36.91)	5.188-5.813 (131.78-147.65)	1.125 (28.58)	0.531 (13.49)	0.750 (19.05)
600	61-100	7.875 (200.02)	1.000 (25.40)	0.125 (3.18)	0.750 (19.05)	0.781 (19.84)	0.719 (18.26)	5.375-5.781 (136.52-146.84)	0.500 (12.70)	0.281 (7.14)	0.250 (6.36)
	101-200	9.625 (244.48)	1.375 (34.92)	0.188 (4.78)	1.125 (28.58)	1.062 (26.97)	0.984 (24.99)	6.125-6.781 (155.58-172.24)	0.688 (17.48)	0.281 (7.14)	0.438 (11.13)
	201-400	11.625 (295.28)	1.875 (47.62)	0.250 (6.35)	1.625 (41.28)	1.453 (36.91)	1.453 (36.91)	7.125-7.831 (180.98-198.90)	0.938 (23.83)	0.406 (10.31)	0.625 (15.88)
	401-600	13.375 (339.72)	2.250 (57.15)	0.250 (6.35)	2.000 (50.80)	1.719 (43.66)	1.719 (43.66)	8.188-8.844 (207.98-224.64)	1.125 (28.58)	0.531 (13.49)	0.750 (19.05)

[a]Tolerances:

Column A: 61-200 A, ±0.062 inch (±1.57 mm); 201-600 A, ±0.094 inch (±2.39 mm)
Column C: ±0.003 inch (±0.08 mm)
Column D: ±0.035 inch (±0.89 mm)
Column H: ±0.008 inch (±0.20 mm)
Column I: minus 0.005, plus 0.025 inch (minus 0.13, plus 0.64 mm). Dimension is diameter of slot at semicircle. Maximum rounding of corner at end of slot 0.125 inch (3.18 mm) radius.
Column J: ±0.031 inch (±0.79 mm).

[b]The length of the cylindrical body may be less than the indicated value if other acceptable interference means (pins through the blades, collars, or the like) are provided to prevent mounting the fuse in a fuseholder that will accommodate a fuse rated in the next lower bracket of current ratings.

KNIFE-BLADE TYPE 61 – 600 A

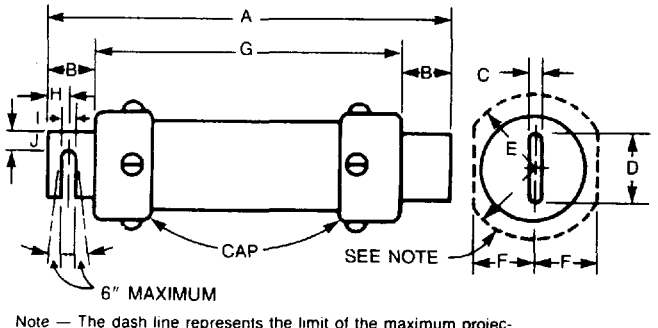

Note — The dash line represents the limit of the maximum projection of a screw, rivet head, or the like. It becomes a circle for a fuse rated at more than 200 A.

Copyright National Electrical Manufacturers Association
Provided by IHS under license with NEMA
No reproduction or networking permitted without license from IHS
Not for Resale

Table 4-8
DIMENSIONS[a] OF FERRULE TYPE CLASS T FUSES IN INCHES (mm)

Rating		Overall Length of Fuse	Length of Ferrule	Outside Diameter of Ferrule	Thickness of Rejection Feature	Width of Rejection Feature[b]	Diameter of Rejection Feature[b]
Volts	Amperes						
	-	A	B	C	D	E	F
300	0-30	0.880 (22.35)	0.280 (7.11)	0.406 (10.31)	—	—	—
	31-60	0.880 (22.35)	0.280 (7.11)	0.563 (14.30)	—	—	—
600	0-30	1.500 (38.10)	0.280 (7.11)	0.563 (14.30)	—	—	—
	31-60	1.560 (39.62)	0.410 (10.41)	0.812 (20.62)	0.062 (1.57)	0.812 (20.62)	0.994 (25.25)

[a]Tolerances:
Column A: 0-60 A, 300 V, ±0.020 inch (±0.51 mm); 0-60 A, 600 V, ±0.40 inch (1.02 mm)
Column B: ±0.20 inch (±0.51 mm)
Column C: ±0.006 inch (±0.15 mm). Diameter of tube is less than ferrules.
Columns D and E: ±0.006 inch (±0.15 mm)
Column F: minus 0.006 inch plus 0.015 (minus 0.15 mm plus 0.41 mm).

[b]Rejection feature may be square or round.

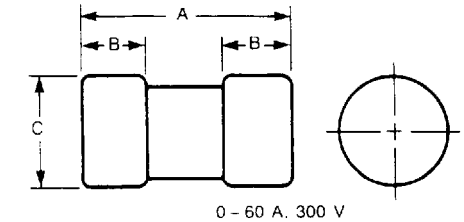

0 - 60 A, 300 V
0 - 30 A, 600V

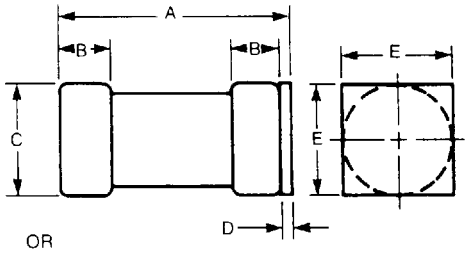

OR

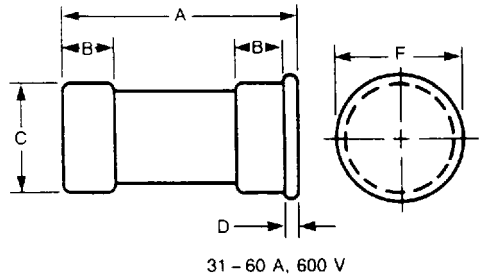

31 - 60 A, 600 V

Copyright National Electrical Manufacturers Association
Provided by IHS under license with NEMA
No reproduction or networking permitted without license from IHS

Not for Resale

Table 4-9
DIMENSIONS[a] OF KNIFE BLADE TYPE CLASS T FUSES IN INCHES (mm)

Rating		Overall Length of Fuse	Distance Between Mounting Centers	Maximum Length of Body	Width of Blade	Diameter of Mounting Holes	Maximum Diameter of Fuses	Minimum Length of Insulated Body	Thickness of Blade	Minimum Length of Blade	Distance of Mounting Holes from End
Volts	Amperes	A	B	C	D	E	F	G	H	I	J
	61-100	2.156 (54.76)	1.556 (39.52)	0.850 (21.59)	0.750 (19.05)	0.281 (7.14)	0.828 (21.03)	0.250 (6.35)	0.125 (3.18)	0.646 (16.41)	0.300 (7.62)
	101-200	2.438 (61.93)	1.695 (43.05)	0.850 (21.59)	0.875 (22.22)	0.344 (8.74)	1.078 (27.38)	0.250 (6.35)	0.188 (4.78)	0.787 (19.99)	0.372 (9.45)
300	201-400	2.750 (69.85)	1.844 (46.84)	0.860 (21.84)	1.000 (25.40)	0.406 (10.31)	1.344 (34.14)	0.250 (6.35)	0.250 (6.35)	0.926 (23.52)	0.453 (11.51)
	401-600	3.063 (77.80)	2.031 (51.59)	0.880 (22.35)	1.250 (31.75)	0.484 (12.29)	1.625 (41.28)	0.250 (6.35)	0.312 (7.92)	1.074 (27.38)	0.516 (13.11)
	601-800	3.375 (85.73)	2.219 (56.36)	0.891 (22.63)	1.750 (44.45)	0.547 (13.89)	2.078 (52.78)	0.250 (6.35)	0.375 (9.53)	1.222 (31.04)	0.578 (14.68)
	801-1200	4.000 (101.6)	2.531 (64.29)	1.078 (27.38)	2.000 (50.8)	0.609 (15.48)	2.516 (63.90)	0.250 (6.35)	0.438 (11.11)	1.441 (36.60)	0.735 (18.67)
	61-100	2.953 (75.01)	2.352 (59.74)	1.640 (41.66)	0.750 (19.05)	0.281 (7.14)	0.828 (21.03)	0.500 (12.70)	0.125 (3.18)	0.646 (16.41)	0.300 (7.62)
	101-200	3.250 (82.55)	2.507 (63.67)	1.660 (42.16)	0.875 (22.22)	0.344 (8.74)	1.078 (27.38)	0.500 (12.70)	0.188 (4.78)	0.787 (19.99)	0.372 (9.45)
600	201-400	3.625 (92.08)	2.719 (69.06)	1.730 (43.94)	1.00 (25.40)	0.406 (10.31)	1.625 (41.28)	0.500 (12.70)	0.250 (6.35)	0.926 (23.52)	0.453 (11.51)
	401-600	3.984 (101.19)	2.953 (75.01)	1.780 (45.21)	1.250 (31.75)	0.484 (12.29)	2.094 (53.19)	0.500 (12.70)	0.312 (7.92)	1.074 (27.28)	0.516 (13.11)
	601-800	4.328 (109.93)	3.172 (80.57)	1.875 (47.63)	1.750 (44.45)	0.547 (13.89)	2.516 (63.91)	0.500 (12.70)	0.375 (9.53)	1.207 (30.66)	0.578 (14.68)

[a]Tolerances:
Column A: 61-200 A, 300 V, ±0.020 (±0.51 mm); 201-1200 A, 300 V and 61-800 A, 600 V, ±0.40 inch (±1.02 mm)
Column B: ±0.015 inch (±0.38 mm)
Columns D and J: ±0.020 inch (0.51 mm), except J tolerance ±0.028 (±0.71 mm) for 801-1200 A, 300 V
Column E: minus 0.000 inch (minus 0.00 mm); 61-100 A, plus 0.005 inch (plus 0.13 mm); 101-200 A, plus 0.006 inch (plus 0.15 mm);201-400 A, plus 0.007 inch (plus 0.18 mm): 401-1200 A, plus 0.008 inch (plus 0.20mm)
Column H: ±0.006 inch (±0.15 mm)

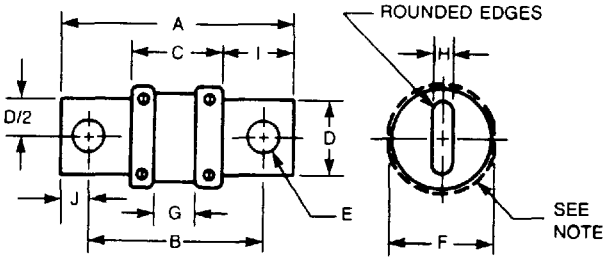

Note — The dashed line represents limit of the maximum 0.063 inch (1.58 mm) projection of screw, rivet head or the like.

Copyright National Electrical Manufacturers Association
Provided by IHS under license with NEMA
No reproduction or networking permitted without license from IHS
Not for Resale

Table 4-10
DIMENSIONS[a] OF CLASS CC FUSES IN INCHES (mm)

Rating		Ferrule Diameter	Ferrule Length	Ferrule Length	Rejection Length	Overall Length	Rejection Diameter
Volts	Amperes	A	B	C	D	E	F
600	0-30	0.405 (10.29)	0.375 (9.53)	0.375 (9.53)	0.125 (3.18)	1.500 (38.10)	0.250 (6.35)

[a]Tolerances:
Columns A, B, C, D and F: ±0.005 inch (±0.13 mm)
Column E: ±0.031 inch (±0.79 mm)

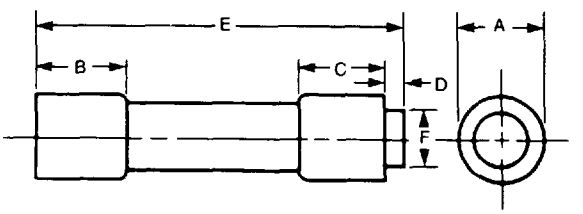

Copyright National Electrical Manufacturers Association
Provided by IHS under license with NEMA
No reproduction or networking permitted without license from IHS
Not for Resale

Section 5

PERFORMANCE

5.1 GENERAL

5.1.1 All alternating current rated fuses shall be subjected to the following ac tests at a frequency of 48 to 63 Hertz:

1. Current carrying capacity
2. Temperature rise
3. Overload opening time
4. Interrupting at rated voltage; overload and 10,000 ampere short circuit.

NEMA Standard 8-20-1986.

5.1.2 Fuses with alternating current interrupting ratings above 10,000 amperes shall be subjected to the following additional ac tests at a frequency of 60 ±3 Hertz:

1. Interrupting rating short circuit
2. Intermediate interrupting short circuit
3. Maximum energy
4. Threshold

I^2t and peak let-through currents shall be measured during the interrupting rating short circuit test and intermediate interrupting short circuit test. Peak let-through current shall be measured during the maximum energy test.

NEMA Standard 8-20-1986.

5.1.3 All direct current rated fuses shall be subjected to the following dc tests:

1. Current carrying capacity*
2. Temperature rise*
3. Overload opening time*
4. Overload and interrupting rating at rated voltage

*For fuses rated for both alternating current and direct current, only the ac test shall be conducted.

NEMA Standard 8-20-1986.

5.2 CURRENT CARRYING CAPACITY AND TEMPERATURE RISE TESTS

5.2.1 Fuses rated 600 amperes or less (Classes G, H, J, K, R, T and CC) shall carry 110 percent of rated current until thermally stable.

The temperature rise of the exterior of the fuse shall be not more than that shown in Tables 5-1 and 5-2 when the fuse carries 110 percent of its rated current.

An alternating current or a direct current at any convenient voltage shall be used.

NEMA Standard 8-20-1986.

5.2.1.1 Each fuse shall be supported in a single-pole fuseholder. Each fuseholder shall be mounted horizontally on a test board of nonconducting material so arranged that each fuse under test will be held in a horizontal position above the board.

If the test board is constructed for the testing of two or more fuses in series, fuseholders shall be located so there shall be a spacing of not less than 6 inches (150mm) between any two fuses under test. The fuseholders and the ammeter shall be connected to each other and to the source of supply by a copper wire of the size shown in Table 5-3.

NEMA Standard 8-20-1986.

5.1.1.2 A conductor larger than No. 8 AWG (8.4 mm^2) shall employ a soldering lug or pressure wire connector.

NEMA Standard 8-20-1986.

5.2.1.3 For fuses rated 60 amperes or less, a fuseholder with reinforced clips shall be used.

NEMA Standard 8-20-1986.

5.2.1.4 For fuses rated more than 60 amperes, C clamps or clip clamps shall be used to press the nonreinforced fuseholder clips against the blades of the fuse. When employing non,reinforced fuseholder clips, each C clamp shall be of iron or steel and shall weigh not more than 6 oz (170g). Neither of the two faces of the clamp making contact with the fuseholder clips shall have an area of more than one-half square inch (323mm^2).

NEMA Standard 8-20-1986.

Copyright National Electrical Manufacturers Association
Provided by IHS under license with NEMA
No reproduction or networking permitted without license from IHS
Not for Resale

Table 5-1
MAXIMUM TEMPERATURE RISES*
(Classes H, K and R Fuses)

Fuse Rating Amperes	Above the Temperature of the Ambient Air			
	Thermometers		Thermocouples	
	On Casing	On Ferrules or Blades	On Casing	On Ferrules or Blades
0-30	50°C	50°C	90°C	90°C
31-60	50°C	50°C	90°C	90°C
61-100	50°C	50°C	90°C	90°C
101-200	50°C	60°C	90°C	90°C
201-400	50°C	75°C	90°C	90°C
401-600	50°C	75°C	90°C	90°C

Table 5-2
MAXIMUM TEMPERATURE RISES*
(Classes CC, G, J and T Fuses)

Fuse Rating Amperes	Above the Temperature of the Ambient Air			
	Thermometers		Thermocouples	
	On Casing	On Ferrules or Blades	On Casing	On Ferrules or Blades
0-30	85°C	50°C	110°C	90°C
31-60	85°C	50°C	110°C	90°C
61-100	85°C	50°C	110°C	90°C
101-200	85°C	60°C	110°C	90°C
201-400	85°C	75°C	110°C	90°C
401-600	85°C	75°C	110°C	90°C

*The temperature rises shown for thermometers and thermocouples are not the same due to the inherent differences between the two measuring devices and the methods of attachment. (This sentence is approved as Authorized Engineering Information.)

Copyright National Electrical Manufacturers Association
Provided by IHS under license with NEMA
No reproduction or networking permitted without license from IHS

Not for Resale

Table 5-3
TEST CONDUCTORS

Fuse Ratings in Amperes	Wire: Minimum Length Between Fuseholders feet (m)	Wire: Size	Wire: (mm²)
0-30	2 (0.6)	8 AWG	(8.4)
31-60	2 (0.6)	4 "	(21.1)
61-100	2 (0.6)	1 "	(42.4)
101-200	2 (0.6)	4/0 "	(107)
201-400	4 (1.2)	500 MCM	(253)
401-600	4 (1.2)	1,000 "	(507)

Any connection to the source of supply shall be not less than 4 ft (1.2 m) long.

5.2.1.5 The temperatures of the fuse shall be measured by a thermocouple or an all-glass mercury thermometer.

When measurement is made with thermocouples, an indicating instrument shall be used. Thermocouples shall be secured by Fuller's Earth and water glass, or by epoxy, welding, soldering or peening. Thermocouples shall be placed against the center of the top or upper surface of the fuse—midway between the caps or ferrules on the body—and on each ferrule or blade at the top center of the fuse clip. The thermocouples shall consist of iron and constantan, or chromel and alumel wires not larger than No. 24 AWG (0.21 mm²).

When thermometers are used, the bulbs shall be placed against the center of the top or upper surface of the fuse—midway between the caps or ferrules on the body—and on each ferrule or blade at the top center of the fuse clip. Thermometers shall be supported so that their stems will be at an angle or not more than 60° with the vertical, and contact between the bulbs and the surfaces of the fuse shall be maintained by glazier's putty or the equivalent, completely covering the bulbs.

The ambient temperature shall not vary more than 5°C (9°F) during the test and shall be within the limits of 25 ± 5°C (77 ± 9°F). The temperature test shall be continued until three successive readings, taken at five minute intervals, indicate no increased rise above the temperature of the ambient air.

NEMA Standard 8-20-1986.

5.2.2 Fuses rated more than 600 amperes (Classes L and T) shall carry 110% of rated current until temperature stabilization occurs.

The temperature rise on the terminal of the Class L fuse shall be not more than 65°C (117°F) above the calibration temperature rise of the test equipment.

The temperature rise on the terminal of the Class T fuse shall be not more than 65°C (117°F) for 800 ampere cartridge size and not more than 85°C (153°F) for the 1200 ampere cartridge size, above the calibration temperature rise of the test equipment.

NEMA Standard 8-20-1986.

5.2.2.1 An alternating current of any convenient voltage shall be used. The fuse shall carry 110% of its rated current until thermally stable. A temperature shall be considered stable when three successive readings, taken at 10 minute intervals, indicate no increased rise above the temperature of the ambient air.

NEMA Standard 8-20-1986.

5.2.2.2 The major axis of the fuse shall be horizontal. Each terminal of the fuse shall be connected to a copper bus bar that is silver plated at points of contact with the fuse. Each bus bar shall be rectangular in cross-section and not exceed the area shown in Table 5-4. The bus bar shall be at least as wide as the fuse terminal. Mounting screw holes shall be provided in the bus bar to correspond with those of the fuse to be tested.

NEMA Standard 8-20-1986.

5.2.2.3 The test equipment shall be calibrated with a shorting bar substituted for the fuse to be tested, to produce a temperature rise on the shorting bar within the limits shown in Table 5-4 in a room ambient temperature of 25 ± 5°C (77 ± 9°F).

The shorting bar shall be the same length as the fuse for which it is substituted. The cross-sectional dimensions of the shorting bar shall be the same as those of the bus bar. The shorting bar shall be of copper, shall be silver-plated at the terminal connections, shall have holes to permit mounting to the bus bar, and shall be one-piece or laminated without space between the laminations.

NEMA Standard 8-20-1986.

Copyright National Electrical Manufacturers Association
Provided by IHS under license with NEMA
No reproduction or networking permitted without license from IHS
Not for Resale

Table 5-4
BUS BAR CROSS-SECTION AND SHORTING BAR TEMPERATURE RISES

Ampere Rating	Test Current in Amperes	Maximum Bus-Bar Cross Section		Shorting Bar Temperature Rise Above Room Ambient			
				Maximum		Minimum	
		Square Inches	(cm^2)	°C	°F	°C	°F
800	880	¾	(4.84)	35	63	20	36
1200	1320	1	(6.45)	35	63	20	36
1600	1760	2	(12.9)	35	63	20	36
2000	2200	3	(19.4)	35	63	20	36
2500	2750	4	(25.8)	35	63	20	36
3000	3300	4½	(29.0)	45	81	30	54
4000	4400	6	(38.7)	60	108	40	72
5000	5500	9	(58.1)	70	126	50	90
6000	6600	9	(58.1)	85	153	65	117

5.2.2.4 Temperature measurements shall be made by thermocouples and an indicating instrument. The thermocouples shall be secured by Fuller's Earth and water glass, epoxy, welding, soldering or peening.

During calibration, a thermocouple shall be located at the top center of the shorting bar.

During the temperature test, a thermocouple shall be secured at the top center of the fuse terminal, approximately ¼ inch (6.4 mm) from the end of the fuse body.

The thermocouples shall consist of iron and constantan or chromel and alumel wires not larger than No. 24 AWG (0.21 mm^2).

NEMA Standard 8-20-86.

5.3 OVERLOAD OPENING TIME

A fuse shall open the circuit within the time limits indicated in Table 5-5 and 5-6.

The fuse shall clear without causing any external soldered connections to melt.

To determine whether a fuse complies with the overload opening time requirements, it shall be tested in the test circuit specified for the current carrying capacity and temperature rise tests. The fuse and test terminals shall be at room temperature at the start of each test. The ambient temperature shall not vary more than 5 °C (9 °F) during the test and shall be within the limits of 25 ± 5 °C (77 ± 9 °F).

Time-delay fuses rated 0-600 amperes shall meet the minimum opening time requirements shown in Tables 5-5 and 5-6.

NEMA Standard 8-20-1986.

Table 5-5
OVERLOAD OPENING TIME
Classes CC and G Fuses

Ampere Rating	Maximum Clearing Time		Minimum Clearing Time for Time-delay Fuses
	135-percent Rating	200-percent Rating	200-percent Rating
0-30	60 minutes	2 minutes	12 seconds
31-60	60 minutes	4 minutes	12 seconds

Copyright National Electrical Manufacturers Association
Provided by IHS under license with NEMA
No reproduction or networking permitted without license from IHS
Not for Resale

Table 5-6
OVERLOAD OPENING TIME
Classes H, J, K, L, R and T Fuses

Ampere Rating	Maximum Clearing Time			Minimum Clearing Time For Time-Delay Fuses
	135-Percent Rating	150-Percent Rating	200-Percent Rating	500-Percent Rating
0-30	60 minutes	—	4 minutes	10 seconds[a]
31-60	60 "	—	6 "	10 "
61-100	120 "	—	8 "	10 "
101-200	120 "	—	10 "	10 "
201-400	120 "	—	12 "	10 "
401-600	120 "	—	14 "	10 "
601-6000	—	240 minutes	—	—

[a]8 seconds for 0-30A, 250V.

Copyright National Electrical Manufacturers Association
Provided by IHS under license with NEMA
No reproduction or networking permitted without license from IHS
Not for Resale

5.4 INTERRUPTING TESTS AT RATED VOLTAGE

The fuse shall be securely mounted so that its major axis is either horizontal or vertical.

The fuse shall be tested between 100 percent and 105 percent of its rated voltage.

After each interrupting test, the voltage shall be continued for one minute after interruption of the current by the fuse. There shall not be any re-establishment of current or any indication of a tendency to restrike before the end of the one minute interval. If there is evidence of a tendency to restrike, the recovery voltage shall be continued for an additional minute.

NEMA Standard 8-20-1986.

5.4.1 Overload Tests

Fuses containing filler shall be subjected to the following tests at a power factor of 0.80 or less lagging.

5.4.1.1 Classes G, H, J, R and CC fuses shall be tested at rated voltage and 200 percent of rated current.

5.4.1.2 Class T fuses rated 600 amperes or less shall be tested at rated voltage and 200 percent of rated current.

5.4.1.3 Class T fuses rated above 600 amperes shall be tested at rated voltage and 300 percent of rated current.

5.4.1.4 Class G and Class T fuses rated 300 volts shall be tested at either 300 volts or 480 volts depending upon the number of fuses to be tested (one at 300 volts or two in series at 480 volts.

NEMA Standard 8-20-1986.

5.4.2 10,000 Amperes Short Circuit Tests

Classes G, H, K, R and CC fuses shall be subjected to a short circuit current of 10,000 amperes.

The source of supply and the test circuit shall deliver 10,000 rms symmetrical amperes.

The resistive and reactive components of the test circuit shall be connected in series and shall result in a power factor of 0.45-0.50. Class H fuses rated 100 amperes or less shall be tested at a power factor of 0.85-0.95. The manufacturer shall be allowed to use a lower power factor when the test station is not capable of providing a specified value. The power factor shall be lagging. The instant of closure of the circuit shall be at random with reference to the phase of the voltage wave.

For a renewable fuse, two successive renewal links shall be tested in the same case. The fuse shall be capable of being renewed after the first test. The fuse need not be renewed after the second test.

NEMA Standard 8-20-1986.

5.4.3 Interrupting Rating and Intermediate Interruption Level Tests

5.4.3.1 Fuses shall be tested at the interrupting levels shown in Table 5-7.

5.4.3.2 The interrupting ratings for Classes J, R, L, T and CC fuses shall be 200,000 amperes.

5.4.3.3 The interrupting rating for Class G fuses shall be 100,000 amperes.

5.4.3.4 The interrupting rating for Class K fuses shall be 200,000, 100,000 or 50,000 amperes. (Class H fuses have an interrupting rating of 10,000 amperes and are covered under the 10,000 ampere short circuit tests).

Table 5-7
TEST LEVELS FOR HIGH INTERRUPTING RATING FUSES (ABOVE 10 kA)

Required Tests	Fuse Interrupting Rating		
	200 kA	100 kA	50 kA
200 kA	X	—	—
100 kA	X	X	—
50KA	X	X	X
Maximum Energy Threshold	X	X	—

5.4.3.5 The clearing I^2t and peak let-through currents shall be measured during these tests. The power factors of all the currents shall be 0.20 or less lagging. The closing angle shall be adjusted to cause start of arcing within 30 electrical degrees prior to system peak voltage. Fuses shall not exceed the limits of clearing I^2t and peak let-through currents shown in Table 5-8 through 5-16.

If a fuse cannot start arcing within 30 electrical degrees of system peak voltage, the fuse shall be tested on the circuit with the closing angle adjusted for maximum offset (approximately zero degrees on the voltage wave).

5.4.3.6 The test current shall be between 100 percent and 120 percent of the interrupting test level.

NEMA Standard 8-20-1986.

Copyright National Electrical Manufacturers Association
Provided by IHS under license with NEMA
No reproduction or networking permitted without license from IHS
Not for Resale

Table 5-8
CLASS CC FUSES (600 V)
MAXIMUM PEAK LET-THROUGH CURRENT I_p (AMPERES) AND CLEARING I^2t (AMPERES SQUARED SECONDS)

Cartridge Size Amperes	Test Fuse Rating Amperes	Threshold Through 50 kA		100 kA		200 kA	
		$I^2t \times 10^3$	$I_p \times 10^3$	$I^2t \times 10^3$	$I_p \times 10^3$	$I^2t \times 10^3$	$I_p \times 10^3$
0-15	15	2.0	3.0	2.0	3.0	3.0	4.0
16-20	20	3.0	4.0	3.0	4.0	3.0	5.0
21-30	30	7.0	6.0	7.0	7.5	7.0	12.0

Table 5-9
CLASS G FUSES (300 V)
MAXIMUM PEAK LET-THROUGH CURRENT I_p (AMPERES) AND CLEARING I^2t (AMPERES SQUARED SECONDS)

Cartridge Size Amperes	Test Fuse Rating Amperes	Threshold Through 100 kA	
		$I^2t \times 10^3$	$I_p \times 10^3$
0-15	1	0.8	1.0
	3	1.0	1.5
	6	1.2	2.5
	10	1.8	2.8
	15	2.0	3.0
16-20	20	3.0	4.0
21-30	25	4.0	5.0
	30	5.0	6.0
31-60	35	14.0	6.0
	40	17.0	8.5
	45	18.0	9.0
	50	22.0	9.5
	60	25.0	10.0

Copyright National Electrical Manufacturers Association
Provided by IHS under license with NEMA
No reproduction or networking permitted without license from IHS
Not for Resale

Table 5-10
CLASS J FUSES (600 V)
MAXIMUM PEAK LET-THROUGH CURRENT I_p (AMPERES) AND CLEARING I^2t (AMPERES SQUARED SECONDS)

Cartridge Size	Test Fuse Rating	Threshold Through 50 kA		100 kA		200 kA	
		$I^2t \times 10^3$	$I_p \times 10^3$	$I^2t \times 10^3$	$I_p \times 10^3$	$I^2t \times 10^3$	$I_p \times 10^3$
0-30	1			0.8	1.0		
	3			1.2	1.5		
	6			2.0	2.3		
	10			3.0	3.3		
	15			4.0	4.0		
	20			5.0	5.0		
	25			5.5	6.0		
	30	7	6	7.0	7.5	7	12
31-60	35			12	7.5		
	40			17	8.0		
	45			18	8.5		
	50			22	9.0		
	60	30	8	30	10	30	16
61-100	70			50	11.5		
	80			60	12.5		
	90			75	13.5		
	100	60	12	80	14	80	20
101-200	110			100	14.5		
	125			150	15.5		
	150			175	17		
	175			225	18.5		
	200	200	16	300	20	300	30
201-400	225			350	22.5		
	250			450	24		
	300			600	26		
	350			800	29		
	400	1000	25	1100	30	1100	45
401-600	450			1500	36		
	500			2000	42		
	600	2500	35	2500	45	2500	70

Copyright National Electrical Manufacturers Association
Provided by IHS under license with NEMA
No reproduction or networking permitted without license from IHS

Not for Resale

Table 5-11
CLASS K FUSES (250 & 600 V)
MAXIMUM PEAK LET-THROUGH CURRENT I_p (AMPERES) AND CLEARING I^2t (AMPERES SQUARED SECONDS)

Cartridge Size in Amperes	Class K1		Class K5		Class K9	
	$I^2t \times 10^3$	$I_p \times 10^3$	$I^2t \times 10^3$	$I_p \times 10^3$	$I^2t \times 10^3$	$I_p \times 10^3$
0-30	10	10	50	11	50	14
31-40	40	12	200	21	250	25
61-100	100	16	500	25	650	35
101-200	400	22	1600	40	3500	60
201-400	1200	35	5000	60	15000	80
401-600	3000	50	10000	80	40000	130

Table 5-12
CLASS RK1 FUSES (250 & 600 V)
MAXIMUM PEAK LET-THROUGH CURRENT I_p (AMPERES) AND CLEARING I^2t (AMPERES SQUARED SECONDS)

Cartridge Size Amperes	Threshold Through 50 kA		100 kA		200 kA	
	$I^2t \times 10^3$	$I_p \times 10^3$	$I^2t \times 10^3$	$I_p \times 10^3$	$I^2t \times 10^3$	$I_p \times 10^3$
0-30	10	6	10	10	11	12
31-60	40	10	40	12	50	16
61-100	100	14	100	16	100	20
101-200	400	18	400	22	400	30
201-400	1200	33	1200	35	1600	50
401-600	3000	43	3000	50	4000	70

Table 5-13
CLASS RK5 FUSES (250 & 600 V)
MAXIMUM PEAK LET-THROUGH CURRENT I_p (AMPERES) AND CLEARING I^2t (AMPERES SQUARED SECONDS)

Cartridge Size Amperes	Threshold Through 50 kA		100 kA		200 kA	
	$I^2t \times 10^3$	$I_p \times 10^3$	$I^2t \times 10^3$	$I_p \times 10^3$	$I^2t \times 10^3$	$I_p \times 10^3$
0-30	50	11	50	11	50	14
31-60	200	20	200	21	200	26
61-100	500	22	500	25	500	32
101-200	1600	32	1600	40	2000	50
201-400	5000	50	5000	60	6000	75
401-600	10,000	65	10,000	80	12,000	100

Copyright National Electrical Manufacturers Association
Provided by IHS under license with NEMA
No reproduction or networking permitted without license from IHS
Not for Resale

Table 5-14
CLASS L FUSES (600 V)
MAXIMUM PEAK LET-THROUGH CURRENT I_p (AMPERES) AND CLEARING I^2t (AMPERES SQUARE SECONDS)

Cartridge Size	Test Fuse Rating	50kA		100 kA		200 kA	
		$I^2t \times 10^6$	$I_p \times 10^3$	$I^2t \times 10^6$	$I_p \times 10^3$	$I^2t \times 10^6$	$I_p \times 10^3$
601-800	800	10	80	10	80	10	80
801-1200	1200	12	80	12	80	15	120
1201-1600	1600	22	100	22	100	30	150
1601-2000	2000	35	110	35	120	40	165
2001-2500	2500	—	—	75	165	75	180
2501-3000	3000	—	—	100	175	100	200
3001-4000	4000	—	—	150	220	150	250
4001-5000	5000	—	—	350	—	350	300
5001-6000	6000	—	—	350	—	500	350

Copyright National Electrical Manufacturers Association
Provided by IHS under license with NEMA
No reproduction or networking permitted without license from IHS

Not for Resale

Table 5-15
CLASS T FUSES (300 V)
MAXIMUM PEAK LET-THROUGH CURRENT I_p (AMPERES) AND CLEARING I^2t (AMPERES SQUARED SECONDS)

Cartridge Size Amperes	Test Fuse Rating Amperes	Threshold Through 50 kA		100 kA		200 kA	
		$I^2t \times 10^3$	$Ip \times 10^3$	$I^2t \times 10^3$	$I_p \times 10^3$	$I^2t \times 10^3$	$I_p \times 10^3$
0-30	1			0.4	0.8		
	3			0.6	1.3		
	6			1.0	2.0		
	10			1.5	3.0		
	15			2.0	4.0		
	20			2.5	4.5		
	25			2.7	5.5		
	30	3.5	5	3.5	7.0	3.5	9
31-60	35			6.0	7.0		
	40			8.5	7.2		
	45			9	7.6		
	50			11	8.0		
	60	15	7	15	9.0	15	12
61-100	70			25	10.0		
	80			30	10.7		
	90			38	11.6		
	100	40	9	40	12.0	40	15
101-200	110			50	12		
	125			75	13		
	150			88	14		
	175			115	15		
	200	150	13	150	16	150	20
201-400	225			175	21		
	250			225	22		
	300			300	24		
	350			400	27	550	35
	400	550	22	550	28		
401-600	450			600	32		
	500			800	37		
	600	1000	29	1000	37	1000	46
601-800	700			1250	45		
	800	1500	37	1500	50	1500	65
801-1200	1000	—	—	3500	65	—	—
	1200	3500	50	3500	65	4000	80

Copyright National Electrical Manufacturers Association
Provided by IHS under license with NEMA
No reproduction or networking permitted without license from IHS
Not for Resale

Table 5-16
CLASS T FUSES (600 V)
MAXIMUM PEAK LET-THROUGH CURRENT I_p (AMPERES) AND CLEARING I^2t (AMPERES SQUARED SECONDS)

		Threshold Through					
		50 kA		100 kA		200 kA	
Cartridge Size	Test Fuse Rating	$I^2t \times 10^3$	$I_p \times 10^3$	$I^2t \times 10^3$	$I_p \times 10^3$	$I^2t \times 10^3$	$I_p \times 10^3$
0-30	1			0.8	1.0		
	3			1.2	1.5		
	6			2.0	2.3		
	10			3.0	3.3		
	15			4.0	4.0		
	20			5.0	5.0		
	25			5.5	6.0		
	30	7	6	7.0	7.5	7	12
31-60	35			12	7.5		
	40			17	8.0		
	45			18	8.5		
	50			22	9.0		
	60	30	8	30	10	30	16
61-100	70			50	11.5		
	80			60	12.5		
	90			75	13.5		
	100	60	12	80	14	80	20
101-200	110			100	14.5		
	125			150	15.5		
	150			175	17		
	175			225	18.5		
	200	200	16	300	20	300	30
201-400	225			350	22.5		
	250			450	24		
	300			600	26		
	350			800	29		
	400	1000	25	1100	30	1100	45
401-600	450			1500	36		
	500			2000	42		
	600	2500	35	2500	45	2500	70
601-800	700			3500	50		
	800	4000	50	4000	55	4000	75

Copyright National Electrical Manufacturers Association
Provided by IHS under license with NEMA
No reproduction or networking permitted without license from IHS

Not for Resale

5.5 MAXIMUM ENERGY

Fuses having interrupting ratings above 10,000 amperes shall interrupt a circuit having an available rms symmetrical current (but not greater than their interrupting rating) that permits a peak current let-through of 70 percent to 100 percent of the peak current value of the available symmetrical component. The power factor shall be 0.20 or less. The closing angles shall produce the start of arcing within 30 electrical degrees prior to system peak voltage.

NEMA Standard 8-20-1986.

5.6 MAXIMUM THRESHOLD RATIO

Fuses having interrupting ratings above 10,000 amperes shall interrupt a circuit having an available rms symmetrical current of not more than the product of the fuse current rating and the maximum threshold ratio and shall clear in the first half-cycle after closing. The maximum threshold ratios are shown in Table 5-17.

Table 5-17
MAXIMUM THRESHOLD RATIOS

Fuse Class	Ratio
CC	30
G	30
H	*
J	30
K	*
RK1	30
RK 5	65
T	30
L (601-1200A)	30
L (1201-2000A)	35
L (2001-4000A)	40
L (4001-6000A)	*

* Not Applicable

The test circuit power factor for the maximum threshold ratio test shall be 0.20 or less and the circuit closing angle shall be adjusted for minimum offset (approximately 90 degrees on the voltage wave).

NEMA Standard 8-20-1986.

5.7 DIRECT CURRENT TESTS

Fuses shall be tested in a direct current circuit between 100 percent and 105 percent of their rated voltage.

After each interrupting test, the voltage shall be continued for one minute after interruption of the current by the fuse. There shall not be any re-establishment of current or any indication of a tendency to restrike before the end of the one minute interval. If there is evidence of a tendency to restrike, the recovery voltage shall be continued for an additional minute.

NEMA Standard 8-20-1986.

5.7.1 Overload Test

To determine whether a fuse complies with the direct current overload requirements, it shall be tested in the test circuit specified for the current carrying capacity and temperature rise tests.

The fuse and test terminals shall be at room temperature at the start of each test. The ambient temperature shall not vary more than 5 °C (9 °F) during the test and shall be within the limits of 25 ± 5 °C (77 ± 9 °F).

The fuse shall interrupt a circuit adjusted to obtain 200 percent (−0, +10%) of current rating. A fuse designated "Time-Delay" shall also be tested on a circuit adjusted to 900% of rated current.

The time constant (t) of the test circuit shall be as shown in Table 5-18.

NEMA Standard 8-20-1986.

Table 5-18
MAXIMUM TIME CONSTANTS

Test Current Amperes	Time Constant in Milliseconds
60	1.7
120	2.1
200	2.5
270	2.7
400	3.0
540	3.3
800	3.7
900	3.8
1200	4.2
1800	4.7
3600	5.8
5400	6.6

The time constants were derived from the formula: $t = \frac{I^{0.3}}{2}$

t = time constant in milliseconds
I = test current

5.7.2 Short Circuit Test

The fuse shall interrupt a circuit having an available current of 10,000 amperes and an available current equal to the maximum interrupting rating of the fuse, see Table 3-6. The time constant shall be not less than 10 milliseconds.

NEMA Standard 8-20-1986.

Copyright National Electrical Manufacturers Association
Provided by IHS under license with NEMA
No reproduction or networking permitted without license from IHS
Not for Resale

NEMA STANDARDIZATION

The purpose of NEMA Standards, their classification and status are set forth in certain clauses of the NEMA Bylaws, which are quoted below:

Purpose of Standards

National Electrical Manufacturers Association Standards are adopted in the public interest and are designed to eliminate misunderstandings between the manufacturer and the purchaser and to assist the purchaser in selecting and obtaining the proper product for its particular need. Existence of a National Electrical Manufacturers Association Standard does not in any respect preclude any member or nonmember from manufacturing or selling products not conforming to the standard.

(Bylaw—Art. V, Sec. 1)

Definition of a Standard

A standard of the National Electrical Manufacturers Association defines a product, process or procedure with reference to one or more of the following: nomenclature, composition, construction, dimensions, tolerances, safety, operating characteristics, performance, rating, testing, and the service for which they are designed.

(Bylaw—Art. V, Sec. 2, Subsection A)

Dimensions

Where dimensions are given for interchangeability purposes, alternate dimensions satisfying the other provisions of the standards publication may be capable of otherwise equivalent performance.

(NEMA Policy Memorandum 84-2, dated June 7, 1984)

Classes of Standards

National Electrical Manufacturers Association Standards are of two classes:

1. NEMA Standard, which relates to a product commercially standardized and subject to repetitive manufacture, which standard has been approved by at least 90 percent of the members of the Subdivision eligible to vote thereon;
2. Suggested Standard for Future Design, which may not have been regularly applied to a commercial product, but which suggests a sound engineering approach to future development, which standard has been approved by at least two-thirds of the members of the Subdivision eligible to vote thereon.

(Bylaw—Art. V, Sec. 2, Subsection B)

Authorized Engineering Information

Authorized Engineering Information consists of explanatory data and other engineering information of an informative character not falling within the classification of NEMA Standard or Suggested Standard for Future Design.

(Bylaw—Art. V, Sec. 6, 1st Sentence)

Official Standards Proposal

An Official Standards Proposal is an official draft of a proposed standard which is formally recommended to an outside organization(s) for consideration, comment and/or approval.

(Bylaw—Art. V, Sec. 4, Subsection A)

Identification of Status

Standards in NEMA Standards Publications are identified in the foreword or following each standard as "NEMA Standard" or "Suggested Standard for Future Design." These indicate the status of the standard. These words are followed by a date which indicates when the standard was adopted in its present form by the Association.

The material identified as "Authorized Engineering Information" and "Official Standards Proposal" is designated similarly.

Copyright National Electrical Manufacturers Association
Provided by IHS under license with NEMA
No reproduction or networking permitted without license from IHS
Not for Resale

FUSE SECTION
OF THE
NATIONAL ELECTRICAL MANUFACTURERS ASSOCIATION

MEMBER COMPANIES

Bussmann Division
Cooper Industries, Inc.
St. Louis, MO 63178

Carbone USA Corporation
Boonton, NJ 07005

CEFCO/Commercial Enclosed
Fuse Company
West New York, NJ 07093

Eagle Electric Mfg. Company, Inc.
Long Island City, NY 11101

Reliance Fuse Division
Brush Fuses, Inc.
Des Plaines, IL 60018

General Electric Company
Wiring Device Department
Warwick, RI 02886

Gould, Incorporated
Circuit Protection Division
Newburyport, MA 01950

Littelfuse, Incorporated
Des Plaines, IL 60016

Copyright National Electrical Manufacturers Association
Provided by IHS under license with NEMA
No reproduction or networking permitted without license from IHS
Not for Resale