H-27-27

FI 1-83 6470247 0001132 1

STANDARDS PUBLICATION/NO. FI 1-1983

nema

Manufactured Electrical Mica

NEMA

NATIONAL ELECTRICAL MANUFACTURERS ASSOCIATION ■ 2101 L STREET, N.W., WASHINGTON, D.C. 20037

Copyright National Electrical Manufacturers Association
Provided by IHS under license with NEMA
No reproduction or networking permitted without license from IHS
Not for Resale

TABLE OF CONTENTS

		Page
	FOREWORD	i
	SCOPE	i
Section 1	DEFINITIONS	
Section 2	TOLERANCES	
	Tolerances on Thickness	1
	Tolerances on Width of Mica Tapes with Glass Cloth Reinforcement	1
	Tolerances for Dimensions of Mica Sheets	1
	Tolerances for Thickness of Fabricated Mica Splitting Segments	1
Section 3	CLASSIFICATION OF MICA SPLITTINGS	
	Classification of Muscovite Mica Splittings	2
	Classification of Phlogopite (Amber) Mica Splittings	6
Section 4	MANUFACTURED MICA SPLITTING PLATES, SHEETS, AND TAPES	
	Mica Splitting Plates	7
	Flexible Plates — Grade 6 (Organic Bonded) and Grade 86 (Silicone Bonded)	8
	Mica Splitting Organic-bonded Composite Flexible Tape	9
	Mica Splitting Organic-bonded Composite Flexible Sheet	10
	Mica Splitting Silicone-bonded Composite Flexible Tape	11
	Mica Splitting Silicone-bonded Composite Flexible Sheet	12
Section 5	MANUFACTURED MICA PAPER PLATES, SHEETS, AND TAPES	
	Unsupported	13
	Supported Organic-bonded	14
	Supported Silicone-bonded	16
Section 6	ROUND TUBES	
	Round Mica Splitting Tubes	17
	Round Mica Paper Tubes	18
Section 7	METHODS OF MEASURING	
	Sampling	19
	Methods of Measuring Thickness	19
	Methods of Measuring Dimensions of Tubes	19
	Method of Measuring Electric Strength	19
	Method of Measuring Mica or Organic Binder Content	20
	Method of Measuring Mica or Silicone Binder Content	21
	Method of Measuring Moldability	21
	Method of Measuring Hot Compression of Mica Plate	21
Section 8	TEST METHODS	
	Method of Determining Undersize Mica Splittings — Grade 6	23

© 1984 by National Electrical Manufacturers Association

Copyright National Electrical Manufacturers Association
Provided by IHS under license with NEMA
No reproduction or networking permitted without license from IHS
Not for Resale

Foreword

This publication represents a revision of the NEMA Standards Publication for *Manufactured Electrical Mica,* FI 1-1977.

These standards have been developed and revised over a period of years in close coordination with user needs. Those which deal with the more traditional mica splitting products have for the most part remained unchanged. However, in several instances, obsolete products have been removed and more up to date products representing new technologies and practices have been included.

The Flexible Insulation and Mica Section of NEMA reviews these standards periodically for any revisions necessary to keep them up to date. Proposed revisions or comments should be submitted to:

Manager, Engineering Department
National Electrical Manufacturers Association
2101 L Street, N.W.
Washington, DC 20037

Scope

This Standards Publication covers manufacturing, measurement, and testing of manufactured electrical mica.

Copyright National Electrical Manufacturers Association
Provided by IHS under license with NEMA
No reproduction or networking permitted without license from IHS
Not for Resale

MANUFACTURED ELECTRICAL MICA

Section 1
DEFINITIONS

Manufactured mica plates are composed of (1) binder and mica splittings, (2) binder and mica paper, or (3) binder, mica paper, and mica splittings, with no reinforcement, in the form of flat pieces of standard dimensions or in rolls from 4 to 40 inches wide.

NEMA Standard 11-3-1983.

Manufactured mica sheets are composed of (1) binder and mica splittings or (2) binder and mica paper, with reinforcement on one or both sides, in the form of flat pieces of standard dimensions or in rolls from 4 to 40 inches wide.

NEMA Standard 11-3-1983.

Manufactured mica tapes are composed of (1) binder and mica splittings or (2) binder and mica paper, with reinforcement on one or both sides, in the form of rolls up to 4 inches wide and containing not less than 10 linear feet.

NEMA Standard 11-3-1983.

Section 2
TOLERANCES

2.1 TOLERANCES ON THICKNESS

For tolerances on the thickness of fabricated mica splitting segments, see 2.4.

For tolerances on the thickness of manufactured mica splitting plates, sheets, and tapes, see Section 4.

For tolerances on the thickness of manufactured mica paper plates, sheets, and tapes, see Section 5.

NEMA Standard 11-3-1983.

2.2 TOLERANCES ON WIDTH OF MICA TAPES WITH GLASS CLOTH REINFORCEMENT

The tolerance in the width of tapes from ½ to 1½ inches wide shall be plus or minus 1/32 inch.

NEMA Standard 11-3-1983.

2.3 TOLERANCES FOR DIMENSIONS OF MICA SHEETS

The tolerance for the length and width of sheets which are 18 x 36 inches or larger shall be plus or minus ½ inch.

NEMA Standard 11-3-1983.

2.4 TOLERANCES FOR THICKNESS OF FABRICATED MICA SPLITTING SEGMENTS

The tolerances for the thickness of segments which are fabricated from rigid milled plate (segment) (Grade 3, 3P and 4) shall be:

1. Nominal thickness range — 20 up to 63 mils.
2. Average thickness of 10 measurements — plus or minus 1 mil from the specified nominal thickness.
3. Individual thickness — plus or minus 2 mils from the specified nominal thickness.

NEMA Standard 11-3-1983.

Copyright National Electrical Manufacturers Association
Provided by IHS under license with NEMA
No reproduction or networking permitted without license from IHS
Not for Resale

Section 3
CLASSIFICATION OF MICA SPLITTINGS

3.1 CLASSIFICATION OF MUSCOVITE MICA SPLITTINGS

3.1.1 Definitions of Mica Splittings

1. *Laminae* are splittings taken from mica blocks and having an average area of 0.4 to 10 square inches (2.5 to 65 square centimeters) and an average thickness of 0.0006 to 0.0012 inches (0.015 to 0.030 millimeters).
2. *Bookform splittings* are splittings taken from the same mica block and having the same size and shape, arranged and supplied in such groups or "books." These laminae are lightly dusted with a fine mica powder to prevent recohesion.
3. *Loose-packaged splittings* are splittings of a random variety of nonuniform shapes. "Dust loose" laminae have been dusted with a fine mica powder; "loose" laminae have not been dusted.

3.1.2 Size and Defects

In order to be within the grade classifications given herein, splittings shall:

1. Meet the size requirements specified in Table 3-1.
2. Have not more than the maximum allowable total defects specified in Table 3-2, based on percent weight. Such defects shall not lie predominantly in any one category.
3. Not have foreign matter included among the splittings.

3.1.3 Sampling

1. Book form — 50 books shall be drawn at random from each case sampled. At least 10 percent of the cases in the lots shall be sampled.
2. Dust loose and loose — A minimum sample of 1 ounce shall be taken from each case sampled. At least 10 percent of the cases in the lot shall be sampled.

3.1.4 Method of Calculation

Splittings shall be examined for defects in the order of separate values listed and shall be counted defective for the first defective characteristic noted. Defects for which separate values are not given may be aggregated. Each group shall be weighed to determine the percentage it represents of the total sample weight less undersizes [see footnote[6] below Table 3-2]. In computing percentages, ½ percent or more shall be considered 1 percent, and less than ½ percent shall be considered 0.

3.1.5 Definitions of Defects

Rough or *burred edges* are frayed or serrated edges usually 1/32 inch deep or greater, or edges turned up or down as caused by trimming with scissors, and so forth, or by rubbing the edge against sandpaper, stone, and so forth.

Stain is an area of color other than the basic color of the mica itself (except in the case of crystallographic discoloration where both colors shall be considered basic) exceeding 15 mils in its major dimension by incident or reflected light. For the purpose of this test method, a splitting shall be considered as stained when the major dimension of a stain, or the sum of the major dimensions of more than one stain, exceeds 1/16 inch.

NEMA Standard 11-3-1983.

NOTES:

1. "Vegetable" stains are cloudy or diffused discolorations of yellow, green, brown, or clay color. Silver or gray discoloration caused by air inclusions are not considered to be stains.
2. "Mineral" stains are distinct areas of dense color which are black, red, brown, or green to transmitted light.
3. No data are available to support the implied organic nature of "vegetable" stains. Tests which have been conducted indicate that these results from finer dispersions of the metallic oxides present in "mineral" stains.

Authorized Engineering Information 11-3-1983.

Tears and fractures are tears or fractures extending from the periphery more than:

Grade		Inch
AA	(No. 4)	½
A	(No. 5)	⅜
B-1	(No. 5½)	¼
C	(No. 6)	¼

Thick edges are edges of splittings which, because of the nature of the mica used or the act of splitting, are thicker at one end or edge than the other. Splittings shall be considered to have a thick edge if the edge or end in question is more than 1½ times the minimum thickness measured at any point on the splitting or if the thickness of the edge or end exceeds the maximum average thickness allowed for the grade of splittings.

Copyright National Electrical Manufacturers Association
Provided by IHS under license with NEMA
No reproduction or networking permitted without license from IHS
Not for Resale

Thick splittings are book-form splittings whose thickness in the major section of their area or over the entire area exceed the maximum average thickness for the grade of splittings. Dust loose splittings shall be considered thick only if such thickness exceeds 1 mil. Loose splittings shall be considered thick only if such thickness exceeds 1.2 mils.

Thin splittings are splittings whose thickness in the major section of their area is less than the minimum average for the grade of splittings.

"V" cuts are cuts or trims into the splitting roughly shaped as a "V." A splitting shall be considered V-cut if it contains an indentation having an included angle of 120 degrees or less extending from the periphery more than:

Grade		Inch
AA	(No. 4)	½
A	(No. 5)	⅜
B-1	(No. 5½)	¼
B-2	(No. 5½)	¼
C	(No. 6 bookform only)	¼

Weathering is loss of gloss usually caused by exposure to the elements; under some circumstances it is like clay stain in appearance.

Waviness is one or a series of elevation(s) or depression(s), or both, which are readily noticeable and which include the conditions called buckles, ridges, and so forth.

NEMA Standard 11-3-1983.

Copyright National Electrical Manufacturers Association
Provided by IHS under license with NEMA
No reproduction or networking permitted without license from IHS
Not for Resale

Copyright National Electrical Manufacturers Association
Provided by IHS under license with NEMA
No reproduction or networking permitted without license from IHS

Table 3-1
SIZE AND AVERAGE THICKNESS

Commercial Grade[1]	NEMA Grade	Form[2]	Size, Square Inches[3]	Minimum Dimension of Usable Rectangle,	Thickness of 10 Splittings, Inches, Incl.
4	AA	Book form	6 up to 10	1½	0.006 to 0.009
5	A	Book form	3 up to 6	1	0.006 to 0.009
5½	B-1	Book form	2 up to 3	⅞	0.006 to 0.009
4	AA	Dust loose	6 up to 10	1½	0.006 to 0.009
5	A	Dust loose	3 up to 6	1	0.006 to 0.009
5½	B-2	Dust loose	1½ up to 3	⅞	0.007 to 0.010
6	C	Dust loose	1 up to 1½	¾	0.007 to 0.010
6-1st	D	Loose	At least 70% shall be 1 up to 1½. Not more than 3% average per lot and not more than 6% per case shall pass through a screen having ¾-inch round openings.	. . .	0.007 to 0.010
6-2nd	E	Loose	At least 50% shall be 1 up to 1½. Not more than 6% average per lot and not more than 12% per case shall pass through a screen having ¾-inch round openings.	. . .	0.007 to 0.0011
6-3rd	F	Loose	At least 65% shall have a minimum area of ¾ square inch. Not more than 12% average per lot and not more than 18% per case shall pass through a screen having ¾-inch round openings.	. . .	0.007 to 0.011

[1] Commercial Grade designations were not developed by NEMA but are listed for information only. (This note has been approved as Authorized Engineering Information.)

[2] See 3.1.1.

[3] "Up to" means "not including". Splittings shall not all be of the minimum area specified but shall contain a fair proportion of sizes throughout the range specified. The areas specified do not refer to the total area of the splittings but to the rectangular size which each grade will produce. For example, Grade A splittings shall be large enough to provide rectangular pieces measuring 1½ x 2, 2 x 2, 2 x 2⅓ inches, and so forth.

6470247 0001138 2
Not for Resale

Copyright National Electrical Manufacturers Association
Provided by IHS under license with NEMA
No reproduction or networking permitted without license from IHS

Table 3-2

MAXIMUM ALLOWABLE DEFECTS, PERCENT[1]

Commercial Grade[2]		NEMA Grade	Undersize	Stain	Waviness	Tears and Fractures	Thick Splittings	Thin Splittings	"V" Cuts	Rough or Burred Edges	Other Defects	Total Allowable Defects[3]
4	Book form	AA	3[4]	1[5]	▲[7]	▲	▲	▲	▲	▲[8]	▲	15
5	Book form	A	3[4]	1[5]	▲[7]	▲	▲	▲	▲	▲[8]	▲	15
5½	Book form	B-1	3[4]	1[5]	▲[7]	▲	▲	▲	▲	▲[8]	▲	15
4	Dust loose	AA	10[4]	7[5]	▲	▲	▲	▲	▲	▲[9]	▲	25
5	Dust loose	A	10[4]	7[5]	▲	▲	▲	▲	▲	▲[9]	▲	25
5½	Dust loose	B-2	10[4]	7[5]	▲	▲	▲	▲	▲	▲[9]	▲	25
6	Dust loose	C	10[4]	7[5]	▲	▲	▲	●	●	▲[9]	▲	20
6-1st	Loose	D	See Table 3-1	12[6]	●	●	3	●	●	●	●	●
6-2nd	Loose	E	See Table 3-1	20[6]	●	●	4	●	●	●	●	●
6-3rd	Loose	F	See Table 3-1	20[6]	●	●	5	●	●	●	●	●

▲ Means "examine for the defect listed."

● Means "do not examine for the defect listed."

[1] See 3.1.5.

[2] Commercial Grade designations were not developed by NEMA but are listed for information only. (This note has been approved as Authorizing Engineering Information.) See 3.1.1.

[3] Shall include an evaluation of undersize splittings for other defects.

[4] Not to be included with total allowable defects.

[5] Book form — No mineral stains shall be permitted. Lots which contain more than 0.2 percent stained splittings in which the sum of the major dimensions of the stains exceeds ¼ inch shall not be regarded as meeting these standards.

Dust loose — Lots which contain more than 2.0 percent of stained splittings in which the sum of the major dimensions of the stains exceeds ¼ inch shall not be regarded as meeting these standards. No more than 10 percent of the stain in Nos. 4, 5, and 5½ shall be mineral stain. No more than 20 percent of the stain in No. 6 shall be mineral stain.

[6] Lots which contain more than 2 percent of stained splittings in which the sum of the major dimensions of the stains exceeds ¼ inch shall not be regarded as meeting these standards. No more than 40 percent of the stain shall be mineral stain.

[7] No more than 10 percent of the total allowable defects shall be waviness.

[8] Count as a defect if more than 20 percent of the periphery is rough or burred.

[9] Count as a defect if more than 35 percent of the periphery is rough or burred.

Not for Resale

3.2 CLASSIFICATION OF PHLOGOPITE (AMBER) MICA SPLITTINGS[1]

The following grades of phlogopite (amber) mica splittings shall be used in the manufacture of mica splitting products covered by these standards:

Commercial Grade	NEMA Grade	Form	Size, Square Inches[2]	Minimum Dimension of Usable Rectangle, Inches	Thickness of 10 Splittings, Inches, Incl.
4	L	Book form[3,4]	6 up to 10	1½	0.006 to 0.009
		Dust loose[4]	6 up to 10	1½	0.006 to 0.009
5	N	Book form[3,4]	3 up to 6	1	0.006 to 0.009
		Dust loose[4]	3 up to 6	1	0.006 to 0.009
		Loose[5]	3 up to 6	1	0.006 to 0.009
5½	O	Book form[3,4]	2¼ up to 3	0.8	0.007 to 0.010
		Loose[5]	2¼ up to 3	0.8	0.007 to 0.010
6	P	Loose[5]	1 up to 2¼	0.75	0.007 to 0.011
7	R	Loose[5]	¾ minimum	0.6	0.007 to 0.011

[1] Amber mica is considered "heater quality" if it withstands 750°C for 30 minutes without calcining or exfoliating.

[2] In any batch or supply of a specified size of phlogopite mica, a tolerance of 5% by weight of pieces of the next lower size shall be permissible. This tolerance is extended to 10% in the case of loose-packed splittings.

"Up to" means "not including". Splittings shall not all be of the minimum area specified but shall contain a fair proportion of sizes throughout the range specified. The areas specified do not refer to the total area of the splittings but to the rectangular size which each grade will produce. For example, Grade N splittings shall be large enough to provide rectangular pieces measuring 1½ x 2, 2 x 2, 2 x 2½ inches, and so forth.

[3] Splittings shall be supplied in the form of individual books with not less than six splittings of the same shape. The splittings shall have no "V" cuts.

[4] Splittings shall be sound, clean, and free of mineral spots. They shall be evenly split to the specified thickness without edges, clean cut, and lightly dusted with fine mica powder.

[5] Same as [4] except that the splittings shall not be dusted and edges shall be permitted to be slightly uneven.

NEMA Standard 11-3-1983.

NOTE: During packing, care should be taken to avoid the inclusion of foreign matter among the splittings. (This note is approved as Authorized Engineering Information.)

Copyright National Electrical Manufacturers Association
Provided by IHS under license with NEMA
No reproduction or networking permitted without license from IHS
Not for Resale

Copyright National Electrical Manufacturers Association
Provided by IHS under license with NEMA
No reproduction or networking permitted without license from IHS
Not for Resale

Section 4
MANUFACTURED MICA SPLITTING PLATES, SHEETS, AND TAPES

4.1 MICA SPLITTING PLATES

NEMA Grade	Nominal Type of Material[1]	Maximum Bond Content, Percent	Thickness, Mils, Incl.	Variation from Nominal, Mils (See 7.2) Average Thickness Plus	Average Thickness Minus	Individual Measurements Plus	Individual Measurements Minus	Average Short-time Electric Strength (Minimum), Volts per Mil[2]
1	Hot-forming milled plate, organic bond	18	15-35	2	2	3	3	650
		18	36-62.5	2	2	3	3	550
81	Hot-forming milled plate, silicone bond	25	15-35	2	2	3	3	550
		25	36-62.5	2	2	3	3	450
2	Hot-forming unmilled plate, organic bond	18	15-62.5	5	5	8	8	550
	Rigid milled plate, organic bond (Segment)							
3[3]	Muscovite	7	15-32	1	1	2	2	650
3[3]	Muscovite	7	33-62.5	1	1	2	2	550
4[3]	Phlogopite	7	15-32	1	1	2	2	650
4[3]	Phlogopite	7	33-62.5	1	1	2	2	550
	Rigid milled plate, silicone bond							
83	Muscovite	15	15-32	1	1	2	2	650
83	Muscovite	15	33-62.5	1	1	2	2	550
5	Rigid unmilled plate, organic bond	7	15-32	5	5	8	8	600
		7	33-62.5	7	7	10	10	550
	Rigid plate, organic bond (Heater)							
7	Muscovite	4	10-20	3	3	8	5	550
8	Phlogopite	4	10-20	3	3	8	5	550
	Rigid plate, inorganic bond (Heater)							
9	Muscovite	*	10-20	3	3	8	5	550
10	Phlogopite	*	10-20	3	3	8	5	550

[1] These products are made with muscovite mica splittings unless otherwise specified.

[2] The average electric strength (as measured with 2-inch electrodes in accordance with 7.4 shall be not less than the values listed.

[3] The maximum hot compression shall be 3% for NEMA Grades 3 and 4 when tested in accordance with 7.8

[4] No standard test method available.

FI 1-83 6470247 0001141 2
Pub. No. FI 1
Page 7

4.2 FLEXIBLE PLATES — GRADE 6 (ORGANIC BONDED) AND GRADE 86 (SILICONE BONDED)[1]

Nominal Thickness, Mils	Minimum Grade of Splittings	Variation from Thickness, Mils				Average Short-time Electric Strength (Minimum), Volts per Mil[2]
		Average Thickness		Individual Measurements		
		Plus	Minus	Plus	Minus	
5	A	2	1	4	3	600
10	D	3	3	7	5	500
15	D	3	3	7	5	500
20	D	3	3	8	6	400
25	E	3	3	8	6	400
30	E	5	3	8	6	400

[1] The maximum bond content shall be 20% for Grade 6 plates and 25% for Grade 86 plates.

[2] The average electric strength (as measured with 2-inch electrodes in accordance with 7.4) shall be not less than the values listed.

NEMA Standard 11-3-1983.

Copyright National Electrical Manufacturers Association
Provided by IHS under license with NEMA
No reproduction or networking permitted without license from IHS

Not for Resale

Copyright National Electrical Manufacturers Association
Provided by IHS under license with NEMA
No reproduction or networking permitted without license from IHS

4.3 MICA SPLITTING ORGANIC-BONDED COMPOSITE FLEXIBLE TAPE

NEMA Grade	Type of Material[1]	Mica Core Thickness, Mils	Nominal Thickness of Glass Reinforcement, Mils		Nominal Thickness of Composite Tape, Mils	Variation from Nominal, Mils (See 7.2)				Average Short-time Electric Strength (Minimum), Volts per Mil[2]
						Average Thickness		Individual Measurements		
			Base	Treated		Plus	Minus	Plus	Minus	
301	Mica between glass cloths	1.7	1	. . .	4.0	1.0	1.0	2.0	2.0	500
		3.5	1	. . .	6.0	1.5	1.5	3.0	3.0	500
313	Mica between glass cloth and 1.5-mil polyester fiber paper	1.7	1.7	. . .	5.0	1.5	1.0	2.5	2.0	400
		3.5	1.7	. . .	6.0	1.5	1.0	3.5	2.5	500
315	Mica between glass cloth and 0.25-mil polyester film	1.7	. . .	. . .	4.0	1.0	1.0	2.5	1.5	500[3]
		3.5	. . .	. . .	6.0	1.0	1.0	3.0	3.0	500[3]
321	Mica between 1-mil polyester films	1.7	. . .	. . .	4.0	1.0	1.0	1.5	1.5	500[3]
		3.5	. . .	. . .	6.0	1.0	1.0	2.5	2.0	500[3]
		5	. . .	. . .	7.0	1.5	1.0	3.0	2.0	500[3]
325	Mica between thin polyester fiber papers	3.5	. . .	. . .	7.0	1.5	1.5	2.0	2.0	500
		5.0	. . .	. . .	8.0	1.5	1.5	3.5	3.5	500
327	Mica between glass cloth and thin polyester paper	5.0	2.0	. . .	8.5	1.5	1.5	3.5	3.5	500
329	Mica between glass cloth and 1-mil polyimide film	1.7	2.0	. . .	5.0	1.5	1.5	2.0	2.0	500
		3.5	2.0	. . .	6.5	2.0	2.0	2.5	2.5	500
		5.0	2.0	. . .	8.0	2.0	2.0	3.5	3.5	500
331	Mica between 1-mil polyimide films	1.7	. . .	. . .	4.0	1.0	1.0	1.5	1.5	500
		3.5	. . .	. . .	6.0	1.0	1.0	2.5	2.0	500
		5.0	. . .	. . .	7.0	1.5	1.0	3.5	3.5	500

[1] These products are made with muscovite mica splittings unless otherwise specified.

[2] The average electric strength (as measured with ¼-inch electrodes in accordance with 7.4, shall be not less than the values listed.

[3] These electric strength values are for the mica portion only. Data obtained on composites with films are unrealistically high. Meaningful values can be obtained only with voltage endurance tests.

Not for Resale

FI 1-83 4420242 0001143 6
Pub. No. FI 1
Page 9

Copyright National Electrical Manufacturers Association
Provided by IHS under license with NEMA
No reproduction or networking permitted without license from IHS
Not for Resale

4.4 MICA SPLITTING ORGANIC-BONDED COMPOSITE FLEXIBLE SHEET

NEMA Grade	Type of Material[1]	Mica Core Thickness, Mils	Nominal Thickness of Glass Reinforcement, Mils		Nominal Thickness of Composite Sheet, Mils	Variation from Nominal, Mils (See 7.2)				Average Short-time Electric Strength (Minimum), Volts per Mil[2]
						Average Thickness		Individual Measurements		
			Base	Treated		Plus	Minus	Plus	Minus	
301	Mica between glass cloths	3.5	3	. . .	10.0	2.0	2.0	3.5	3.5	300
		5	1.7	. . .	10.0	1.0	2.0	3.0	4.0	300
		5	3	. . .	12.0	2.0	2.0	3.0	4.0	300
		10	3	. . .	17.0	3.5	3.5	7.0	5.0	300
		15	3	. . .	22.0	4.0	4.0	8.0	6.0	300
		20	3	. . .	27.0	4.0	4.0	9.0	7.0	300
305	Mica with varnished glass cloth on one side only	3.5	2	3.5	7.0	1.5	1.5	3.0	3.0	750
		5	2	3.5	9.0	1.5	1.5	3.0	3.0	750
		7	2	3.5	11.0	2.0	3.0	3.5	4.0	500
		10	2	3.5	14.0	3.0	3.0	7.0	5.0	500
309	Mica with glass cloth on one side only	7	3	. . .	11.0	2.0	3.0	3.0	4.0	400
		10	3	. . .	14.0	3.0	3.0	6.0	5.0	400
		15	3	. . .	19.0	4.0	3.0	8.0	5.0	400
311	Mica between varnished glass cloths	3.5	2	3.5	11.0	2.0	2.0	4.0	4.0	600
		5	2	3.5	12.0	2.0	1.5	4.5	3.5	600
		5	3	5.0	15.0	2.0	2.0	4.5	4.5	600
		7	2	3.5	14.0	3.0	2.5	5.0	4.0	600
		10	2	3.5	17.0	3.5	3.0	8.0	5.0	550
		10	3	5.0	20.0	4.0	3.0	8.5	5.5	550
		15	2	3.5	22.0	4.0	3.5	9.0	6.0	550
		15	3	5.0	25.0	4.5	3.5	9.5	6.5	450
		20	2	3.5	27.0	4.0	3.5	10.0	7.0	450
321	Mica between 1-mil polyester films	7	. . .	. . .	9.0	2.5	1.5	3.5	2.5	500
		10	. . .	. . .	12.0	3.0	2.0	6.5	3.5	450
		15	. . .	. . .	17.0	3.5	2.5	7.5	4.5	450
		20	. . .	. . .	22.0	3.5	2.5	8.5	5.5	400
323	Mica between 2-mil polyester films	7	. . .	. . .	11.0	2.5	2.0	4.0	3.0	500

[1] These products are made with muscovite mica splittings unless otherwise specified.

[2] The average electric strength (as measured with 2-inch electrodes in accordance with 7.4, shall be not less than the values listed.

FI 1-83
6470247 0001144 8

Copyright National Electrical Manufacturers Association
Provided by IHS under license with NEMA
No reproduction or networking permitted without license from IHS

4.5 MICA SPLITTING SILICONE-BONDED COMPOSITE FLEXIBLE TAPE

NEMA Grade	Type of Material[1]	Mica Core Thickness, Mils	Nominal Thickness of Glass Reinforcement, Mils		Nominal Thickness of Composite Tape, Mils	Variation from Nominal, Mils (See 7.2)				Average Short-time Electric Strength (Minimum), Volts per Mil[2]
						Average Thickness		Individual Measurements		
			Base	Treated		Plus	Minus	Plus	Minus	
302	Mica between glass cloths	3.5	1	. . .	6.0	1.5	1.5	3.0	3.0	500
314	Mica with glass cloth on one side only	1.7	1	. . .	3.0	1.0	1.0	1.5	1.5	650
		1.7	1.7	. . .	4.0	1.0	1.0	2.0	2.0	500
		3.5	1	. . .	5.0	1.0	1.5	1.5	2.0	600
316	Mica between glass cloth and 0.25-mil polyester film	1.7	1.7	. . .	4.0	1.0	1.0	2.5	1.5	500[3]
		3.5	1.7	. . .	6.0	1.5	1.0	3.5	3.0	500[3]

[1] These products are made with muscovite mica splittings unless otherwise specified.

[2] The average electric strength (as measured with ¼-inch electrodes in accordance with 7.4, shall be not less than the value listed.

[3] These electric strength values are for the mica portion only. Data obtained on composites with film are unrealistically high. Meaningful values can be obtained only with voltage endurance tests.

NEMA Standard 11-3-1983.

Not for Resale

Copyright National Electrical Manufacturers Association
Provided by IHS under license with NEMA
No reproduction or networking permitted without license from IHS

4.6 MICA SPLITTING SILICONE-BONDED COMPOSITE FLEXIBLE SHEET

NEMA Grade	Type of Material[1]	Mica Core Thickness, Mils	Nominal Thickness of Glass Reinforcement, Mils		Nominal Thickness of Composite Tape, Mils	Variation from Nominal, Mils (See 7.2)				Average Short-time Electric Strength (Minimum), Volts per Mil[2]
						Average Thickness		Individual Measurements		
			Base	Treated		Plus	Minus	Plus	Minus	
306	Mica with varnished glass cloth on one side only	1.7	2	3.5	5.0	1.5	1.0	2.5	2.0	750
		3.5	2	3.5	7.0	1.5	1.5	3.0	3.0	750
		5	2	3.5	9.0	1.5	1.5	3.0	3.0	750
		7	2	3.5	11.0	2.0	3.0	3.5	4.0	500
		10	2	3.5	14.0	3.0	3.0	7.0	5.0	500
312	Mica between varnished glass cloths	1.7	2	3.5	9.0	1.5	1.5	2.0	1.5	600
		3.5	2	3.5	11.0	2.0	1.5	4.0	4.0	550
		3.5	3	5.0	11.0	2.0	2.0	4.5	4.5	500
		5	2	3.5	12.0	2.0	1.5	4.5	3.5	550
		7	2	3.5	14.0	3.0	2.5	5.0	4.0	550
		10	2	3.5	17.0	3.5	2.5	8.0	5.0	550
		10	3	5.0	20.0	4.0	3.0	8.5	5.5	500
		15	2	3.5	22.0	4.0	3.5	9.0	6.0	500
		20	2	3.5	27.0	4.0	3.5	10.0	7.0	400

[1] These products are made with muscovite mica splittings unless otherwise specified.

[2] The average electric strength (as measured with 2-inch electrodes in accordance with 7.4, shall be not less than the values listed.

NEMA Standard 11-3-1983.

Not for Resale

6470247 0001146 1

Copyright National Electrical Manufacturers Association
Provided by IHS under license with NEMA
No reproduction or networking permitted without license from IHS
Not for Resale

Section 5
MANUFACTURED MICA PAPER PLATES, SHEETS, AND TAPES*

5.1 UNSUPPORTED

NEMA Grade	Type of Material	Maximum Bond Content, Percent	Nominal Thickness, Mils, Incl.	Variation from Nominal, Mils (See 7.2)				Average Electric Strength (Minimum), Volts per Mil*	
				Average Thickness		Individual Measurements			
				Plus	Minus	Plus	Minus	Short Time	Step by Step
2P	Hot forming unmilled plate, organic bond	25	10-63	2	2	3	3	850	800
82P	Hot forming unmilled plate, silicone bond	25	10-63	2	2	3	3	850	700
3P	Rigid milled plate, organic bond (segment)	10	10-63	1	1	2	2	800	700
5P	Rigid unmilled plate, organic bond	10	10-63	2	2	3	3	800	700
6P	Flexible plate, organic bond	25	5-20	3	3	4	4	700	600
		25	21-32	3	3	4	4	600	500
86P	Flexible plate, silicone bond	25	1-5	0.5	0.5	1	1	650	550
		25	5-20	1	1	2	2	650	550
		25	21-32	3	3	4	4	550	450
8P	Rigid plate, silicone bond	12	6-62	2	2	3	3	350	300
9P	Rigid plate, inorganic bond (Heater)		7-30	2	2	3	3	800	500

[1] The average electric strength (as measured with 2-inch electrodes in accordance with 7.4, shall not be less than the values listed. Where ¼-inch electrodes are used, the values shall be 110% of those listed.

* Materials less than 8 mils in thickness shall be classified as tapes.

NEMA Standard 11-3-1983.

FI 1-83
6470247 0001147 3
Pub. No. FI 1

Copyright National Electrical Manufacturers Association
Provided by IHS under license with NEMA
No reproduction or networking permitted without license from IHS
Not for Resale

5.2 SUPPORTED ORGANIC-BONDED (CONTINUED)

NEMA Grade	Type of Material	Mica Core Thickness, Mils	Nominal Thickness of Glass Reinforcement, Mils		Nominal Thickness of Composite Sheet, Mils	Variation from Nominal Average Thickness, Mils[1]		Average Electric Strength (Minimum), Volts per Mil[2]
			Base	Treated		Plus	Minus	
325P	Mica paper between thin polyester papers	2	. . .	. . .	6	1.5	1.5	400
		4	. . .	. . .	8	1.5	1.5	400
327P	Mica paper between glass cloth and thin glass fiber paper	2	2	. . .	7	1.5	1.5	400
		4	2	. . .	9	1.5	1.5	400
329P	Mica paper between glass cloth and 1-mil polyimide film	2	2	. . .	6	1.5	1.5	500
		4	2	. . .	8	1.5	1.5	500
331P	Mica paper between 1-mil polyimide films	2	. . .	. . .	5	1.0	1.0	800
		4	. . .	. . .	8	1.0	1.0	800
333P	Mica paper with 1-mil polyimide film on one side	2	. . .	. . .	4	1.0	1.0	600
		4	. . .	. . .	6	1.0	1.0	600
335P	Mica paper with parallel (nonwoven) glass and a 0.25 polyester film on one side	2	1.5[3]	. . .	5	1.5	1.5	600
		4	1.5[3]	. . .	7	1.5	1.5	600
337P	Mica paper with parallel (nonwoven) glass and a 1-mil polymide film on one side	2	1.5[3]	. . .	6	1.5	1.5	600
		4	1.5[3]	. . .	8	1.5	1.5	600

[1] The thickness shall be measured in accordance with 7.2 except that for mica paper tapes only one layer shall be measured.

[2] The average electric strength (as measured with 2-inch electrodes in accordance with 7.4, shall be not less than the values listed. Where ¼-inch electrodes are used, the values shall be 110% of those listed.

[3] Thickness indication is that of a single glass yard.

NEMA Standard 11-3-1983.

6470247 0001148 5

Copyright National Electrical Manufacturers Association
Provided by IHS under license with NEMA
No reproduction or networking permitted without license from IHS

5.2 SUPPORTED ORGANIC-BONDED

NEMA Grade	Type of Material	Mica Core Thickness, Mils	Nominal Thickness of Glass Reinforcement, Mils		Nominal Thickness of Composite Sheet, Mils	Variation from Nominal Average Thickness, Mils[1]		Average Electric Strength (Minimum), Volts per Mil[2]
			Base	Treated		Plus	Minus	
18P	Mica paper between 1-mil polyester films	3	. . .	. . .	6.0	1	1	800
19P	Mica paper between glass cloth and 0.25-mil polyester film	2	1.7	. . .	5.5	. . .	. . .	700
		3	1.0	. . .	5.5	1	1	700
		3	1.7	. . .	6.0	1	1	700
		4	1.7	. . .	8.0	. . .	. . .	700
301P	Mica paper between glass cloths	4	1.7	. . .	9.0	1	1	400
309P	Mica paper with glass cloth on one side only	2	1	. . .	4.0	1	1	500
		3	1.7	. . .	6.0	1	1	500
		3	1.7	. . .	6.0	1.5	1.5	400
311P	Mica paper between varnished glass cloths	4	2	3.5	12.0	1.5	1.5	800
313P	Mica paper between glass cloth and thin polyester fiber paper	2	2	. . .	6.5	1.0	1.0	400
		4	2	. . .	8.5	1.0	1.0	400

[1] The thickness shall be measured in accordance with 7.2 except that for mica paper tapes only one layer shall be measured.

[2] The average electric strength (as measured with 2-inch electrodes in accordance with 7.4, shall be not less than the values listed. Where ¼-inch electrodes are used, the values shall be 110% of those listed.

[3] Thickness indication is that of a single glass yard.

NEMA Standard 11-3-1983.

Not for Resale

Copyright National Electrical Manufacturers Association
Provided by IHS under license with NEMA
No reproduction or networking permitted without license from IHS

5.3 SUPPORTED SILICONE-BONDED

NEMA Grade	Type of Material	Mica Core Thickness, Mils	Nominal Thickness of Glass Reinforcement, Mils		Nominal Thickness of Composite Sheet, Mils	Variation from Nominal Average Thickness, Mils[1]		Average Electric Strength (Minimum), Volts per Mil[2]
			Base	Treated		Plus	Minus	
304P	Mica paper between varnished glass cloth and 1-mil polyester film	4	2	3.5	10	1.5	1.5	900
310P	Mica paper with glass cloth on one side only	2	2	. . .	5	1	1	300
		4	2	. . .	7	1	1	300
		6	2	. . .	9	1	1	300
312P	Mica paper between varnished glass cloths	2	2	3.5	10	1.5	1.5	700
		3	3	5	15	2	2	700
		4	2	3.5	12	1.5	1.5	700
		10	2	3.5	20	2	2	700
334P	Mica paper with 1-mil polyimide film on one side	2	. . .	. . .	4	1.0	1.0	600
		4	. . .	. . .	6	1.0	1.0	600

[3] The thickness shall be measured in accordance with 7.2 except that for mica paper tapes only one layer shall be measured.

[2] The average electric strength (as measured with 2-inch electrodes in accordance with 7.4) shall be not less than the values listed. Where ¼-inch electrodes are used, the values shall be 110% of those listed.

NEMA Standard 11-3-1983.

Not for Resale

6470247 0001150 3

Copyright National Electrical Manufacturers Association
Provided by IHS under license with NEMA
No reproduction or networking permitted without license from IHS

Section 6
ROUND TUBES

6.1 ROUND MICA SPLITTING TUBES

NEMA Grade	Type of Material	Approximate Percentage of Manufactured Mica	Minimum Wall Thickness, Inches	Nominal Inside Diameter, Inches[1]	Average Tolerances in Diameters, Mils (Plus or Minus)[2]				Average Electric Strength (Minimum)[3] Volts per Mil (See 7.4)[4]	
					Wall Thicknesses Up to 1/16 Inch[1]		Wall Thicknesses 1/16 up to 5/32 Inch[1]			
					Inside Diameter	Outside Diameter	Inside Diameter	Outside Diameter	Short Time	Step by Step
101	100 percent manufactured mica[5]	100	0.032	Up to 1	5	15	5	20	300	200
				1 up to 2	8	15	8	20	300	200
				2 up to 4	10	15	10	25	300	200
103	Paper-covered manufactured mica	80	0.032	Up to 1	5	15	5	20	250	170
				1 up to 2	8	15	8	20	250	170
				2 up to 4	10	15	10	25	250	170

[1] "Up to" means "not including."

[2] See 7.3 for method of measuring the diameter of tubes.

[3] The electric strength values, stated in volts per mil, decrease with an increase in thickness. Therefore, the values given in this column are applicable to tubes having a nominal wall thickness of not more than 0.125 inch.

[4] The average electric strength (when measured in accordance with 7.4) shall be not less than the values listed.

[5] When the inside diameter is 2 inches or less, a paper starter shall be permitted to be used.

NEMA Standard 11-3-1983.

Not for Resale

Copyright National Electrical Manufacturers Association
Provided by IHS under license with NEMA
No reproduction or networking permitted without license from IHS

6.2 ROUND MICA PAPER TUBES

NEMA Grade	Nominal Inside Diameter Inches, Incl.	Average Tolerances in Diameters, Mils (Plus or Minus)[1]								Average Electric Strength (Minimum), Volts per Mil (See 7.4)[2]	
		Wall Thicknesses Up to 0.032 Inch, Incl.		Wall Thicknesses 0.033-0.063 Inch, Incl.		Wall Thicknesses 0.064-0.125 Inch, Incl.		Wall Thicknesses 0.126-0.250 Inch, Incl.			
		Inside Diameter	Outside Diameter	Inside Diameter	Outside Diameter	Inside Diameter	Outside Diameter	Inside Diameter	Outside Diameter	Short Time	Step by Step
101P	Up to 1	5	7.5	5	10	5	15	5	25	600	550
	Over 1 to 2	7.5	7.5	7.5	10	7.5	15	7.5	25	600	550
	Over 2 to 4	10	7.5	10	10	10	15	10	25	600	550

[1] See 7.3 for the method of measuring the diameter of tubes.

[2] The average electric strength (when measured in accordance with 7.4 shall be not less than the values listed.

NEMA Standard 11-3-1983.

Not for Resale

6470247 0001152 7

Section 7
METHODS OF MEASURING

7.1 SAMPLING

Sampling shall be in accordance with the following:

1. For lots up to 500 — one unit or one percent of the lot, rounded to the nearest unit, whichever is greater.
2. For lots of 500 to 2000 — five units or one-half of one percent of the lot, rounded to the nearest unit, whichever is greater.

If all of the samples selected for the test meet all of the requirements, the lot shall be considered as confirming to these standards. If two samples fail any of the tests, the lot shall be considered as not conforming to these standards.

If one sample fails to meet any one requirement, a sufficient number of additional samples shall be selected to make a total of ten. If a total of two out of the ten samples fail to meet any of the tests, the lot shall be considered as not conforming to these standards.

NEMA Standard 11-3-1983.

7.2 METHODS OF MEASURING THICKNESS

7.2.1 Sheets and Plates

Ten measurements of the thickness shall be taken at equal intervals over the entire sheet or plate in accordance with Method A or B given in the ASTM *Standard Tests for Thickness of Solid Electrical Insulation,* D374-79.[1] Where a more precise method is required, the measurements shall be (1) taken in accordance with Method C as given in ASTM D374-79 or (2) taken in accordance with Method C but with the latter so modified that the anvil pressure will be 50 plus or minus 4 psi for flexible mica splitting materials and 150 plus or minus 10 psi for rigid materials, using a ⅜-inch-diameter presser foot and anvil.

The average of the ten measurements shall constitute the average thickness of the sheet or plate.

An individual measurement is a single reading.

[1]Copies are available from the American Society for Testing and Materials, 1916 Race Street, Philadelphia, PA 19103.

7.2.2 Tapes

A roll shall be selected at random from any lot. Approximately 20 feet of the roll shall be folded so that it will form five layers of tape, each approximately 4 feet long.

Ten measurements of the thickness of the five layers shall be taken at equal intervals over the entire length of the tape in accordance with Method A or B given in ASTM D374-79. Where a more precise method is required, the measurements shall be (1) taken in accordance with Method C as given in ASTM D374-79 or (2) taken in accordance with Method C but with the latter so modified that the anvil pressure will be 50 plus or minus 4 psi for flexible mica splitting materials, using a ⅜-inch-diameter presser foot and anvil.

The average of the ten measurements, divided by 5, shall constitute the average thickness of the tape.

An individual measurement is a single reading taken on five layers of tape and divided by 5.

NEMA Standard 11-3-1983.

7.3 METHOD OF MEASURING DIMENSIONS OF TUBES

The dimensions of tubes shall be measured in accordance with the ASTM *Standard Methods of Measuring Dimensions of Rigid Tubes Used for Electrical Insulation,* D668-79.[1]

NEMA Standard 11-3-1983.

7.4 METHODS OF MEASURING ELECTRIC STRENGTH

7.4.1 Sheets, Plates, and Tapes

The electric strength of sheets, plates and tapes shall be measured in accordance with ASTM *Standard Methods of Testing Pasted Mica Used in Electrical Insulation,* D352-77,[1] with the following exceptions:

1. Size of Electrodes — Two-inch electrodes shall be used. For materials where one dimension is not great enough to prevent flashover in air (such as tapes), ¼-inch electrodes shall be used as specified in Section 27 of ASTM *Methods of Testing Varnished Cotton Fabrics and Varnished Cotton Fabric Tapes Used for Electrical Insulation,* D295-80.[1]
2. Conditioning — No special conditioning is required.
3. Medium — All electric strength tests shall be made in air.

Copyright National Electrical Manufacturers Association
Provided by IHS under license with NEMA
No reproduction or networking permitted without license from IHS
Not for Resale

4. Electric Strength — The average electric strength shall be the average of 10 electric breakdowns divided by the average thickness of the specimens.

7.4.2 Tubes

The electrical strength of tubes shall be measured in air in the transverse direction in accordance with the ASTM *Standard Methods of Testing Laminated Tubes Used for Electrical Insulation,* D348-80,[1] with the following exceptions:

1. Electrode — The metal inner electrode shall be at least 7 inches long. The outer metal-foil electrode shall be 2 inches long and shall be positioned so that the electric field is transverse. The distance measured axially between the ends of the outer and inner electrodes shall be not less than 2 inches.
2. Length of Test Specimen —The test specimen shall be of sufficient length to prevent flashover.
3. Conditioning — Specimens shall be tested without special conditioning. When required, specimens shall be conditioned for at least 48 hours at 50 percent relative humidity plus or minus 2 percent and 23°C plus or minus 1.1°C (73°F ± 2°F) and shall be tested immediately thereafter.
4. Calculation — The calculations in volts per mil shall be based on the breakdown voltage and the average wall thickness.

NEMA Standard 11-3-1983.

7.5 METHOD OF MEASURING MICA OR ORGANIC BINDER CONTENT

7.5.1 Purpose

The purpose of this test is to ascertain the relative percentage of mica and binder for both plates and fabricated parts having no mechanical reinforcement.

7.5.2 Apparatus

The apparatus shall consist of the following:

1. An electrically heated muffle oven which will provide a temperature of 525°C plus or minus 25°C (977°F plus or minus 45°F).
2. Dishes of porcelain, platinum, or other materials not affected by the test conditions.
3. An analytical balance having an accuracy of at least 0.001 gram.

[1]Copies are available from the American Society for Testing and Materials, 1916 Race Street, Philadelphia, PA 19103.

7.5.3 Test Specimen

1. Plates — Discard a 2-inch strip cut from the length of the plate and then cut ½-inch strips for test. Discard 2 inches from both ends of the strips. If the material has not been sanded or has been surface coated, sand lightly on both sides to remove any excess surface binder. Cut 5 to 10 grams from spots evenly distributed along the strip.
2. Fabricated Parts — A representative test specimen weighing not less than 5 grams shall be selected from the lot. If the parts are small, take at random a sufficient number of specimens to give the required weight. If the parts are large, cut 5 grams from a cross-section of one of the parts chosen at random.

7.5.4 Procedure

1. Unpressed plates and flexible materials shall be dried in a convection oven at 130°C (266°F) for 10 minutes to remove solvents.
2. Each specimen shall be weighed to the nearest 0.001 gram in a tared dish.
3. Place the dish with the specimen in a muffle oven at 525°C plus or minus 25°C (977°F plus or minus 45°F) for 30 minutes. Examine the sample at the end of this period for black spots of partially burned binder. If the sample has more than a trace of this condition, heat for an additional 10 minutes and re-examine. Cool in a desiccator and determine the weight of the residue.
4. As an alternative method where a muffle oven is not available, the dish with the specimen shall be placed over a Meeker or Fisher type burner and heated at a low red heat to avoid dehydration of mica until all of the organic material and carbon are burned off.
5. The general procedure for making tests is as follows:
   a. Obtain a representative sample.
   b. Dry in an oven where required.
   c. Weigh a clean dish (weight C).
   d. Place a sample of the proper weight in the dish.
   e. Weigh the dish with the sample (weight E).
   f. Burn out binder.
   g. Cool in a desiccator.
   h. Weigh dish with burned sample (weight H).

Copyright National Electrical Manufacturers Association
Provided by IHS under license with NEMA
No reproduction or networking permitted without license from IHS
Not for Resale

7.5.5 Report

The report shall include the percent binder or percent mica, or both, as follows:

$$\frac{\text{Weight E - Weight H}}{\text{Weight E - Weight C}} \times 100 = \text{Percent Binder}$$

$$\frac{\text{Weight H - Weight C}}{\text{Weight E - Weight C}} \times 100 = \text{Percent Mica}$$

NEMA Standard 11-3-1983.

7.6 METHOD OF MEASURING MICA OR SILICONE BINDER CONTENT

The mica or silicone binder content shall be measured in accordance with ASTM D352-77.[1]

NEMA Standard 11-3-1983

7.7 METHOD OF MEASURING MOLDABILITY

7.7.1 Purpose

The purpose of this test is to measure the ability of hot-forming plate to be formed when heated and to retain its shape when cooled to room temperature.

7.7.2 Apparatus

The apparatus shall consist of the following:

1. For specimens having a thickness of 1/16 inch and less, a mandrel having a diameter of 1 1/2 inches shall be used.
2. For specimens over 1/16 inch up to and including 3/32 inch in thickness, a mandrel having a diameter of 2 inches shall be used.
3. A hot plate which provide a temperature within the range of 100°C to 150°C (212°F to 302°F).
4. A cold surface plate.

7.7.3 Test Specimen

The test specimen shall be 2 inches in width and of sufficient length to form a butt joint on the mandrel.

7.7.4 Procedure

The test specimen shall be heated on a hot plate having a temperature within the range of 100°C to 150°C (212°F to 302°F) and then formed around the mandrel. The specimen shall then be rolled on a cold surface plate until it is cooled, and the mandrel shall then be removed.

[1]Copies are available from the American Society for Testing and Materials, 1916 Race Street, Philadelphia, PA 19103.

7.7.5 Report

The report shall include the following:

1. Original thickness of the test specimen in thousandths of an inch.
2. The temperature of the hot plate.
3. The degree to which the mica plate flakes or buckles.
4. The change in diameter 10 minutes after the mandrel is removed.

NEMA Standard 11-3-1983.

7.8 METHOD OF MEASURING HOT COMPRESSION OF MICA PLATE

7.8.1 Scope

This method is intended to apply to the testing of bonded mica splittings and bonded mica paper for use as commutator segment plate.

7.8.2 Definition

The hot compression test determines the change in thickness of bonded micaceous materials as a result of maintaining a compressive load while the material is thermally cycled.

7.8.3 Significance

This test provides values which relate to the amount of change in the thickness which is anticipated when the material is subject to compressive loading at elevated temperature.

7.8.4 Apparatus

The apparatus shall consist of the following:

1. Press — A hydraulic press having thermostatically-controlled electrically-heated platens, or a hydraulic press with other provisions for heating the specimen and controlling the temperature. The platen shall be large enough to accommodate a 2 x 2-inch specimen and permit the use of inside micrometers or calipers, if they are used. The press shall be capable of exerting sufficient force to obtain a pressure of at least 1000 psi on the test specimen. The apparatus shall be capable of maintaining a specimen temperature of 200°C plus or minus 5°C (392°F plus or minus 9°F). It is desirable that some provision be made for cooling, such as using platens containing water ducts or forced circulation of air.
2. Pressure gage — A pressure gage or gages, as required, capable of determining the pressure on the specimen with an accuracy of plus or minus 5 percent.
3. Thickness gage — A thickness gage capable of measuring the thickness of the specimen to the nearest 1 mil.

Copyright National Electrical Manufacturers Association
Provided by IHS under license with NEMA
No reproduction or networking permitted without license from IHS
Not for Resale

4. Thermocouple — The thermocouple used for measuring the specimen temperature shall be not less than 30 B&S gage nor larger than 20 B&S gage.

It shall be permissible to use steel plates between the surface of the mica and the platen in order to protect the surface of the platen.

7.8.5 Test Specimen

The test specimen shall consist of sufficient pieces of bonded micaceous plate, 2 x 2 inches in size, to form a stack approximately but not greater than 1.000 inch in thickness.

7.8.6 Sampling

A sufficient number of mica pieces 2 inches square shall be sheared from a mica plate in such a manner as to represent the entire sheet. The sample shall not contain any pieces cut from an edge of the sheet.

The presence of a surface film of any appreciable thickness will tend to increase the percent compression and may cause slippage in the sample. It may be desirable that material which has been surface coated with shellac or other resinous materials be sanded as necessary to remove such coating prior to testing. (This paragraph is approved as Authorized Engineering Information.)

7.8.7 Procedure

Center the stacked specimen in the press with the thermocouple junction as near as practicable to the center of the stack. Carefully align the stack to form a right parallelepiped. Apply a pressure of 1000 psi on the specimen and, after 5 minutes, carefully determine the average thickness by means of a suitable gage. Where inside gages are used, measure the thickness at each of the four corners as close to the specimen as possible.

Pack thermal insulation equivalent to approximately 2 inches of loose rock wool around the test specimen without disturbing it. The platen temperature or surrounding medium shall not exceed the specified test temperature by more than 10°C (18°F).

Heat the specimen while maintaining 1000 psi until the stack reaches a temperature of 160°C plus or minus 5°C (320°F plus or minus 9°F) or, for silicone bonded materials, 200°C plus or minus 5°C (392°F plus or minus 9°F) and hold for 2 hours. The specified temperature of the stack shall be reached in not less than ½ hour nor more than 1¼ hour. Cool the stack while maintaining 1000 psi. When the temperature of the stack reaches 5°C (9°F) above the temperature at which the original thickness was measured, the thickness of the specimen shall be again measured. The cooling rate for the specimen shall be approximately the same as the heating rate.

7.8.8 Report

The report shall include the following:

1. The nominal thickness of the material and the thickness of the specimen under specified test pressure.
2. The percent hot compression, calculated as follows:

$$\frac{\text{Reduction in thickness x 100}}{\text{Original specimen thickness under specified test pressure}}$$

3. The temperature and pressure at which the test was run.

NEMA Standard 11-3-1983.

Copyright National Electrical Manufacturers Association
Provided by IHS under license with NEMA
No reproduction or networking permitted without license from IHS
Not for Resale

Section 8
TEST METHODS

8.1 METHOD OF DETERMINING UNDERSIZE MICA SPLITTINGS — GRADE 6

8.1.1 Apparatus (See Figures 8-1, 8-2, and 8-3)

The apparatus shall consist of the following:

1. A perforated drum 18 inches long and 15 inches in diameter. The drum shall be made of 0.025-inch steel plate, with perforations ¾ inch in diameter, and an open area of 61 percent. It shall be driven by a constant-speed motor at 15 rpm.
2. A catch pan below the drum to collect all particles which pass through the perforations.

8.1.2 Sampling

At least 10 percent of the cases in each lot, but no less than one case shall be tested, example:

Number of Cases in Lot	Number of Cases to be Tested
1-10	1
11-20	2
21-30	3
31-40	4
41-50, etc.	5

One test shall be made for each case.

8.1.3 Procedure

Introduce 300 grams of mica splittings into the drum through the opening at one end. Rotate the drum for 2 minutes at 15 rpm. Weigh the particles which fall into the catch pan. Clean the drum in preparation for the next test.

8.1.4 Report

The report shall include the following for each case tested:

1. Purchase order number.
2. Supplier's name.
3. Grade and color of mica.
4. Case number.
5. Weight of mica placed in drum.
6. Weight of particles which fall into catch pan.
7. Percent of undersize splittings — (Item 6/Item 5) x 100.

NEMA Standard 11-3-1983.

NOTE: The time required for the test is usually 6 to 8 minutes per case. (This note is approved as Authorized Engineering Information.)

Copyright National Electrical Manufacturers Association
Provided by IHS under license with NEMA
No reproduction or networking permitted without license from IHS
Not for Resale

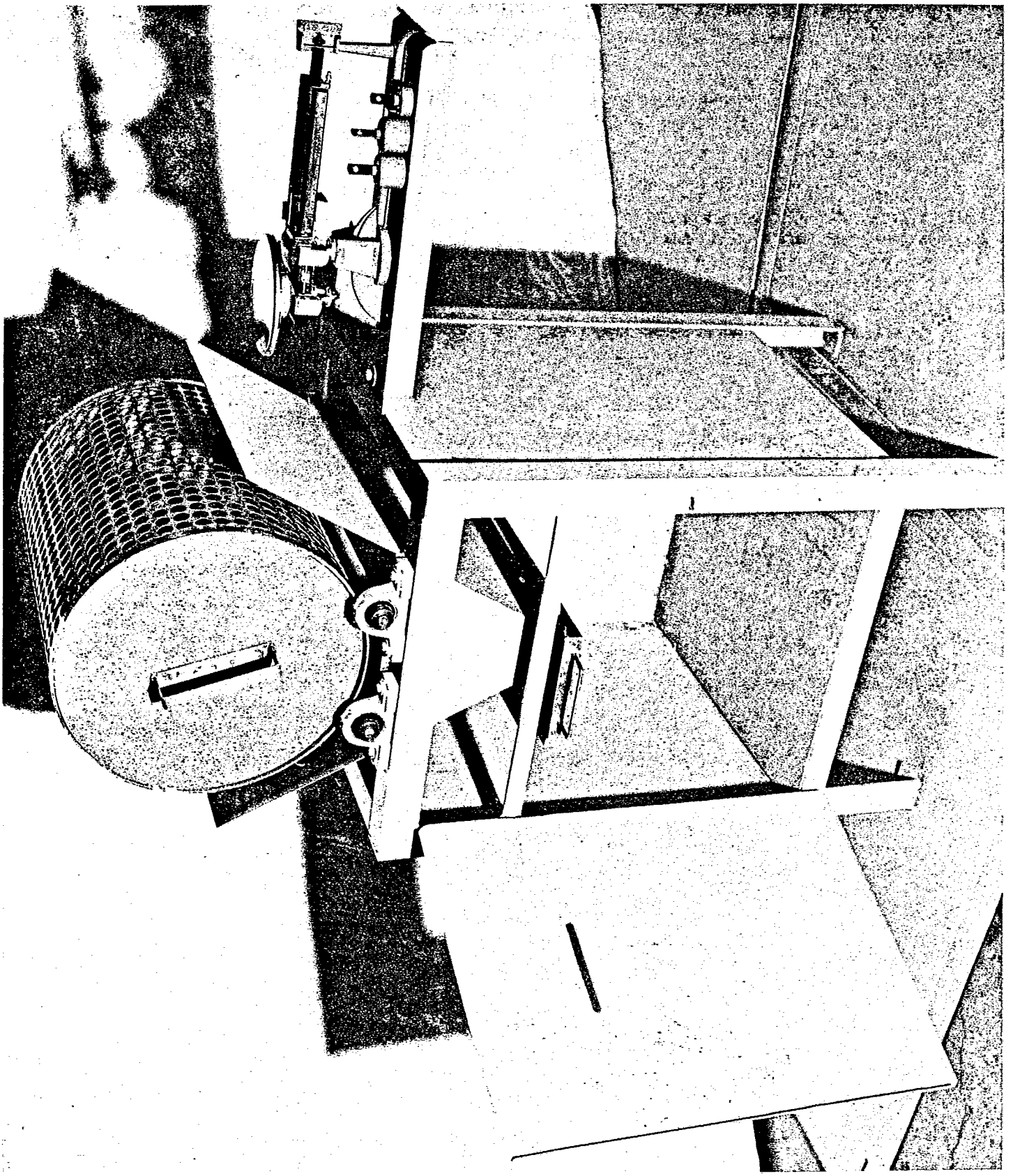

Figure 8-1
PERFORATED DRUM AIR CATCH PAN

Copyright National Electrical Manufacturers Association
Provided by IHS under license with NEMA
No reproduction or networking permitted without license from IHS
Not for Resale

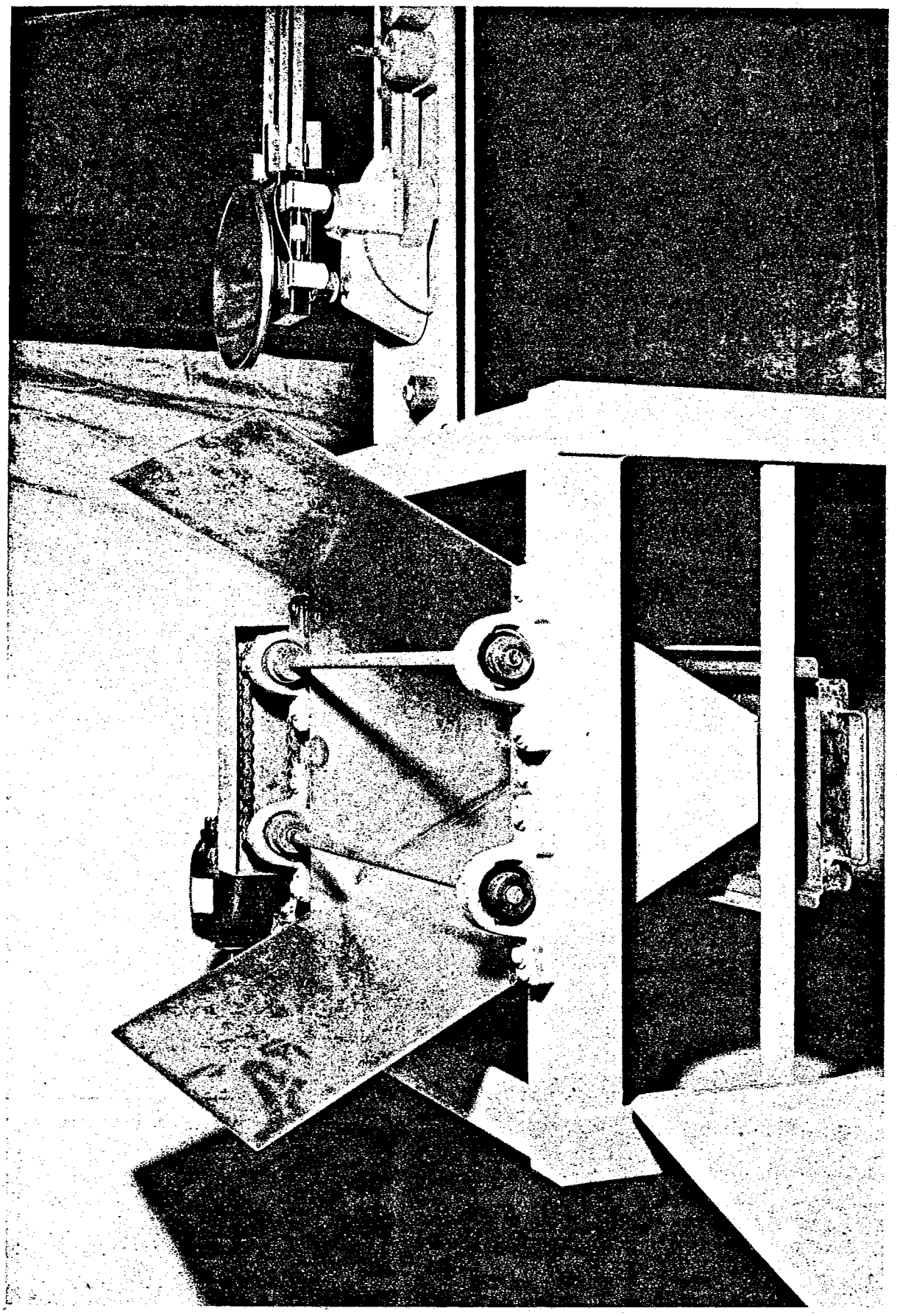

Figure 8-2
CATCH PAN

Copyright National Electrical Manufacturers Association
Provided by IHS under license with NEMA
No reproduction or networking permitted without license from IHS
Not for Resale

Copyright National Electrical Manufacturers Association
Provided by IHS under license with NEMA
No reproduction or networking permitted without license from IHS
Not for Resale

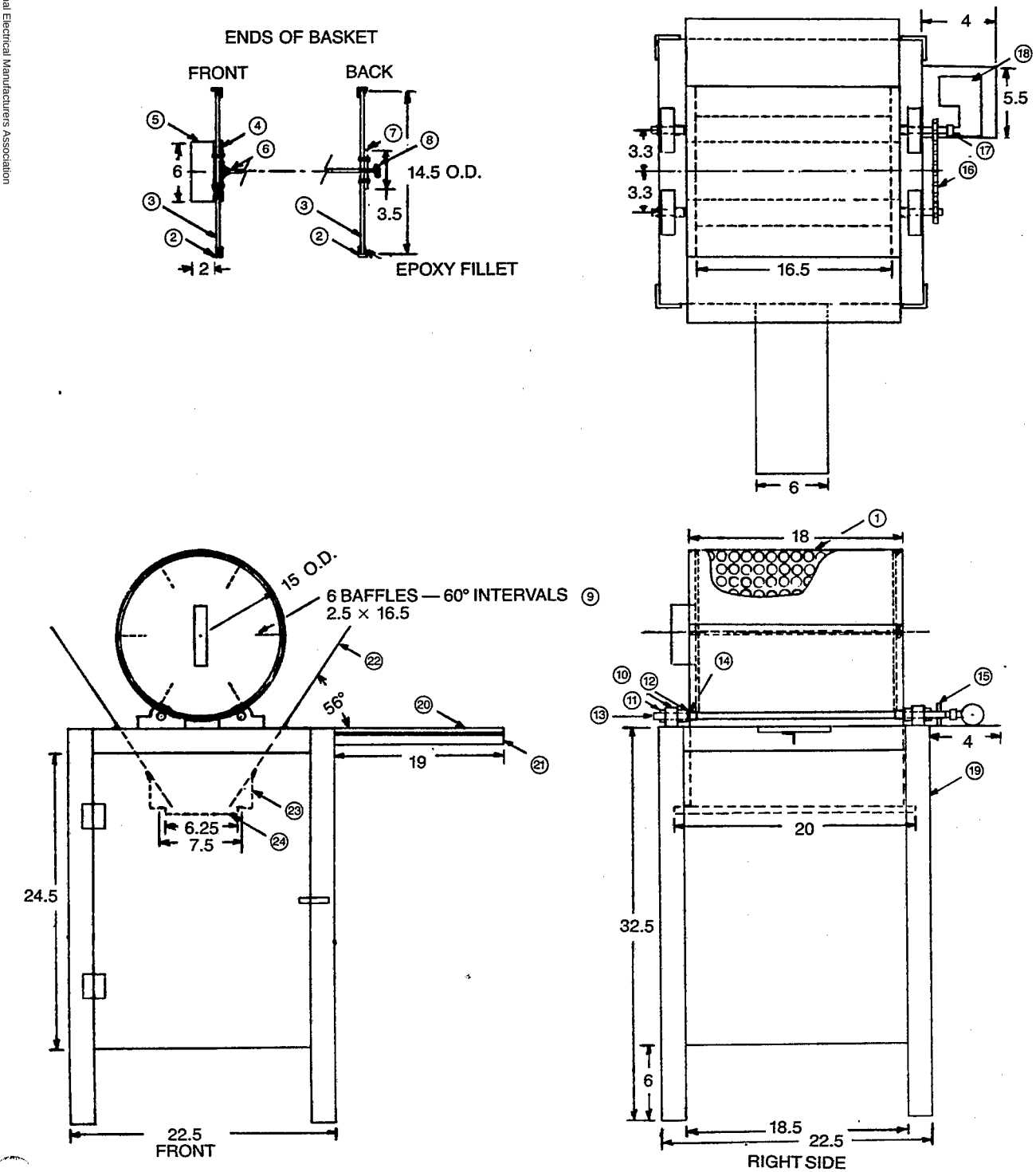

Item	Description
1	304 stainless steel basket, 0.025 x 15″ outside diameter x 18″ long, ¾″ diameter holes, 61% open area.
2	Two ¾ x ¾ x ⅛″ angle irons, rolled perfect circle*
3	Two 14½″ outside diameter x ⅛″ masonite
4	One 6 x 1″ steel back-up plate
5	One 10 x 1″ steel handle, rivet to item 4
6	One ¼″ outside diameter x 19″ long steel rod, weld to item 4
7	One 3½ x 3½″ steel back-up plate, rivet to item 3
8	One ¼″ thumb screw
9	Six 2½ x 16½ x 1/16″ baffles, spot weld to item 2, run epoxy fillet at basket line
10	Four pillow blocks, BNS-½″
11	Four eccentric locking collars for item 10
12	Four spacing sleeves, ½″ inside diameter x 1½″ outside diameter
13	Two drive shafts, ½″ outside diameter x 22″
14	Four rubber friction sleeves, ½″ inside diameter x 1.3″ outside diameter
15	Two sprockets, ½″ inside diameter x 2″ outside diameter, K.S.U.-12
16	One roller chain, ½″ pitch, No. 41 (with connecting links)
17	One coupling, FCBB 12, ½″
18	One gear motor, 110 volts, 60 cycles, 1/70 hp, 1725 rpm, 10-1 speed reduction
19	Four 2 x 2 x ¼″ angle irons, 32.5″ long
20	One scale support, ⅛ x 6 x 18″
21	One 1½ x 1½ x ¼″ angle iron, 18″ long
22	Two deflecting baffles, 1/16 x 17¾ x 18″
23	Two ¾ x ¾ x ⅛″ angle iron, 20″ long
24	One mica catch pan, 1/16 x 6¼ x 20″

*Roll with outside diameter flange surface as per drawing.

Figure 8-3
DETAIL OF PERFORATED DRUM AND CATCH PAN APPARATUS

NEMA STANDARDIZATION

FI 1-83 6470247 0001161 8

The purpose of NEMA Standards, their classification and status are set forth in certain clauses of the NEMA Bylaws, which are quoted below:

Purpose of Standards

National Electrical Manufacturers Association Standards are adopted in the public interest and are designed to eliminate misunderstandings between the manufacturer and the purchaser and to assist the purchaser in selecting and obtaining the proper product for its particular need. Existence of a National Electrical Manufacturers Association Standard does not in any respect preclude any member or nonmember from manufacturing or selling products not conforming to the standard.

(Bylaw—Art. V, Sec. 1)

Definition of a Standard

A standard of the National Electrical Manufacturers Association defines a product, process or procedure with reference to one or more of the following: nomenclature, composition, construction, dimensions, tolerances, safety, operating characteristics, performance, rating, testing, and the service for which they are designed.

(Bylaw—Art. V, Sec. 2, Subsection A)

Dimensions

Where dimensions are given for interchangeability purposes, alternate dimensions satisfying the other provisions of the standards publication may be capable of otherwise equivalent performance.

(NEMA Policy Memorandum 84-2, dated June 7, 1984)

Classes of Standards

National Electrical Manufacturers Association Standards are of two classes:

1. NEMA Standard, which relates to a product commercially standardized and subject to repetitive manufacture, which standard has been approved by at least 90 percent of the members of the Subdivision eligible to vote thereon;
2. Suggested Standard for Future Design, which may not have been regularly applied to a commercial product, but which suggests a sound engineering approach to future development, which standard has been approved by at least two-thirds of the members of the Subdivision eligible to vote thereon.

(Bylaw—Art. V, Sec. 2, Subsection B)

Authorized Engineering Information

Authorized Engineering Information consists of explanatory data and other engineering information of an informative character not falling within the classification of NEMA Standard or Suggested Standard for Future Design.

(Bylaw—Art. V, Sec. 6, 1st Sentence)

Official Standards Proposal

An Official Standards Proposal is an official draft of a proposed standard which is formally recommended to an outside organization(s) for consideration, comment and/or approval.

(Bylaw—Art. V, Sec. 4, Subsection A)

Identification of Status

Standards in NEMA Standards Publications are identified in the foreword or following each standard as "NEMA Standard" or "Suggested Standard for Future Design." These indicate the status of the standard. These words are followed by a date which indicates when the standard was adopted in its present form by the Association.

The material identified as "Authorized Engineering Information" and "Official Standards Proposal" is designated similarly.

Copyright National Electrical Manufacturers Association
Provided by IHS under license with NEMA
No reproduction or networking permitted without license from IHS
Not for Resale

9009279 0002597 764

FLEXIBLE INSULATION AND MICA SECTION OF THE NATIONAL ELECTRICAL MANUFACTURERS ASSOCIATION

MEMBER COMPANIES

Dennison Manufacturing Company
Framingham, MA 01701

EHV—Weidmann Industries, Inc.
St. Johnsbury, VT 05819

E. I. Dupont de Nemours and Company
Wilmington, DE 19898

Essex Group, Inc.
Magnet Wire and Insulation Division
Ft. Wayne, IN 46804

General Electric Company
Schenectady, NY 12306

Kirkwood Industries, Inc.
Cleveland, OH 44135

Manning Paper Company
Troy, NY 12181

Spaulding Fibre Company, Inc.
Tonawanda, NY 14150

Sterling Paper Corporation
Stratford, CT 06497

Westinghouse Electric Corporation
Bedford, PA 15522

Copyright National Electrical Manufacturers Association
Provided by IHS under license with NEMA
No reproduction or networking permitted without license from IHS
Not for Resale