A-07-09

FG 1-86 6470247 0001116 3

STANDARDS PUBLICATION/NO. FG 1

nema

Fiberglass Cable Tray Systems

NEMA

NATIONAL ELECTRICAL MANUFACTURERS ASSOCIATION ■ 2101 L STREET N.W., WASHINGTON, D.C. 20037

Copyright National Electrical Manufacturers Association
Provided by IHS under license with NEMA
No reproduction or networking permitted without license from IHS
Not for Resale

NEMA FG 1-1986

FG 1

FIBERGLASS CABLE TRAY SYSTEMS

Published by

National Electrical Manufacturers Association
2101 L Street, NW
Washington, DC 20037
(202) 457-8400

© 1986 by National Electrical Manufacturers Association

Copyright National Electrical Manufacturers Association
Provided by IHS under license with NEMA
No reproduction or networking permitted without license from IHS
Not for Resale

TABLE OF CONTENTS

		Page
	FOREWORD	i
	SCOPE	ii
Section 1	REFERENCED STANDARDS	1
Section 2	DEFINITIONS	1
Section 3	MANUFACTURING STANDARDS	
	Materials	2
	Supplemental Finishes	2
	Dimensions	2
	Protection of Cable Insulation	3
	Fittings	3
Section 4	PERFORMANCE STANDARDS AND CLASS DESIGNATIONS	
	Working (Allowable) Load Capacity	3
	Load/Span Class Designations	3
	Effect of Temperature	4
Section 5	TEST STANDARDS	
	Destruction Load Test	4
	Deflection Test	5
Section 6	SPECIFICATIONS AND DRAWINGS	
	Data to Appear in Specifications	5
	Data to Appear on Drawings	5
Section 7	APPLICATION INFORMATION	
	Deflection	6
	Fittings	6
	Supports	6
	Support Locations	6
	Thermal Contraction and Expansion	7
	Warning! Walkways	7
	LIST OF ILLUSTRATIONS	
Figure 7-1	Horizontal Elbows	8
Figure 7-2	Horizontal Tee	8
Figure 7-3	Horizontal Cross	8
Figure 7-4	Horizontal Wye	8
Figure 7-5	Straight Reducer	9
Figure 7-6	Offset Reducer	9
Figure 7-7	Vertical Elbows	9
Figure 7-8	Vertical Tee	9

Copyright National Electrical Manufacturers Association
Provided by IHS under license with NEMA
No reproduction or networking permitted without license from IHS
Not for Resale

Foreword

Standards Publication No. FG1-1986 covers fiberglass cable tray systems. Its primary purpose is to encourage the manufacture and utilization of standardized fiberglass cable tray systems and to eliminate misunderstandings between manufacturers and users. This Standards Publication provides technical requirements concerning the construction, test, and performance of fiberglass cable tray systems. The development of this publication is the result of many years of research, investigation, and experience by the members of the Fiberglass Cable Tray Section of NEMA. Throughout the development of this publication, test methods and performance values have been related as closely as possible to end-use applications. Almost every item therein, when applied properly, contributes to safety in one way or another. The manufacturer of fiberglass cable tray systems in accordance with this publication is, however, only one factor in its safe use. Total safety involves the joint efforts of the various equipment manufacturers, the system designer, the installer, and the user.

The fiberglass cable tray system manufacturer has limited or no control over the following factors which are vital to a safe installation:

1. Environmental conditions
2. System design
3. Product selection and application
4. Installation practices
5. Maintenance of the system

This Standards Publication has been promulgated with a view toward promoting safety to persons and property by the proper selection and use of fiberglass cable tray systems. It has been developed through consultation among manufacturers and users, to result in improved serviceability, safety, and quality of fiberglass cable tray systems.

This publication is in accordance with applicable provisions of the 1987 *National Electrical Code,* Article 318.

This publication will be periodically reviewed by the Fiberglass Cable Tray Section of NEMA for any revisions necessary to keep it up to date with advancing technology.

Comments or recommended revisions are welcomed and should be submitted to:

Manager, Engineering Department
National Electrical Manufacturers Association
2101 L Street, N.W., Suite 300
Washington, D.C. 20037

Copyright National Electrical Manufacturers Association
Provided by IHS under license with NEMA
No reproduction or networking permitted without license from IHS
Not for Resale

SCOPE

These standards cover continuous, complete fiberglass systems of ladder, ventilated, solid-bottom cable tray or channel type trays, intended for the support of power or control cables, or both.

Copyright National Electrical Manufacturers Association
Provided by IHS under license with NEMA
No reproduction or networking permitted without license from IHS
Not for Resale

Section 1

REFERENCED STANDARDS

The following publication is adopted, in whole or in part as indicated, by reference in this Standards Publication.

American National Standards Institute (ANSI)
1430 Broadway
New York, NY 10018

National Fire Protection Association (NFPA)
Batterymarch Park,
Quincy, MA 02269

ANSI/NFPA 70-1987 *National Electrical Code*

Section 2

DEFINITIONS

2.1 DEFINITIONS

2.1.1 Fiberglass Cable Tray System

A fiberglass cable tray system is an assembly of fiberglass reinforced plastic cable tray sections and accessories, that forms a rigid structural system to support cables.

NEMA Standard 8-20-1986.

2.1.2 Fiberglass Cable Tray Types

A. *Ladder Type.* A ladder-type fiberglass cable tray is a prefabricated fiberglass structure consisting of two longitudinal side rails connected by individual transverse members.

B. *Trough Type.* A trough-type fiberglass cable tray is a prefabricated fiberglass structure with a ventilated or solid bottom within integral or separate longitudinal side rails.

C. *Channel Type.* A channel type cable tray is a pultruded fiberglass channel consisting of a ventilated or solid bottom with integral side rails.

NEMA Standard 8-20-1986.

2.1.3 Cable Tray Section

A fiberglass cable tray section is a single length of cable tray, either straight or formed as an elbow, tee, cross, and so forth.

NEMA Standard 8-20-1986.

2.1.4 Straight Section

A straight section is a fiberglass cable tray section which has no change in direction.

NEMA Standard 8-20-1986.

2.1.5 Fittings

Fiberglass cable tray fittings are sections which are joined to other cable tray sections for the purpose of changing the size or direction of the cable tray system.

NEMA Standard 8-20-1986.

2.1.6 Horizontal Elbow

A horizontal elbow is a fiberglass cable tray section which changes direction in the same plane.

NEMA Standard 8-20-1986.

2.1.7 Vertical Elbow (Inside Or Outside)

A vertical elbow is a fiberglass cable tray section which changes direction to a different plane.

A. *Inside Vertical Elbow.* An inside vertical elbow changes direction upward from the horizontal plane.

B. *Outside Vertical Elbow.* An outside vertical elbow changes direction downward from the horizontal plane.

NEMA Standard 8-20-1986.

Copyright National Electrical Manufacturers Association
Provided by IHS under license with NEMA
No reproduction or networking permitted without license from IHS
Not for Resale

2.1.8 Horizontal Tee

A horizontal tee is a fiberglass cable tray section which is suitable for joining cable tray sections in three directions at 90-degree intervals in the same plane.

NEMA Standard 8-20-1986.

2.1.9 Horizontal Cross

A horizontal cross is a fiberglass cable tray section which is suitable for joining cable tray sections in four directions at 90-degree intervals in the same plane.

NEMA Standard 8-20-1986.

2.1.10 Reducer (Straight, Right Hand, Left Hand)

A reducer is a fiberglass cable tray section which is suitable for joining fiberglass cable tray sections of different widths in the same plane.

A straight reducer has two symmetrical offset sides.

A right-hand reducer, when viewed from the large end, has a straight side on the right.

A left-hand reducer, when viewed from the larger end, has a straight side on the left.

NEMA Standard 8-20-1986.

2.1.11 Connector

A fiberglass cable tray connector is a device which joins fiberglass cable tray straight sections or fittings, or both.

The basic types of connectors are:

1. Rigid
2. Expansion
3. Adjustable.

NEMA Standard 8-20-1986.

2.1.12 Accessories

Accessories are devices which are used to supplement the function of straight sections and fittings, and include such items as dropouts, covers, conduit adapters, hold-down devices, adjustable connectors, dividers, and the like.

NEMA Standard 8-20-1986.

2.1.13 Supports

A cable tray support is a device which provides adequate means for supporting fiberglass cable tray straight sections or fittings.

The basic types of cable tray supports are:

1. Cantilever bracket
2. Trapeze
3. Individual rod suspension.

NEMA Standard 8-20-1986.

Section 3

MANUFACTURING STANDARDS

3.1 MATERIALS

Fiberglass cable trays shall be made of fiberglass (fiber glass reinforced plastic shapes) which is flame retardant, ultraviolet light resistant and which utilizes a surfacing veil for added corrosion protection in accordance with the 1987 *National Electrical Code,* Article 318.

NEMA Standard 8-20-1986.

3.2 SUPPLEMENTAL FINISHES

All edges with exposed glass shall be sealed with a compatible resin coating.

NEMA Standard 8-20-1986.

3.3 DIMENSIONS

A. *Ladder-type Trays*

1. Lengths of Straight Sections—10 feet or 20 feet plus or minus 3/16 inch, not including connectors if attached.
2. Widths—6, 9, 12, 18, 24, 30, and 36 inches, plus or minus 1/4 inch inside dimension. Overall widths shall not exceed inside widths by more than 4 inches.
3. Depths—Inside depths shall be 3 through 7 inches, plus or minus 3/8 inch.
4. Rung Spacing on Straight Sections—6, 9, 12, or 18 inches on centers.
5. Fitting Radii—12, 24, and 36 inches.
6. Degrees of Arc for Elbows, 30, 45, 60, and 90 degrees.

B. *Trough-type Trays*

1. Lengths of Straight Sections—10 feet or 20 feet plus or minus 3/16 inch, not including connectors if attached.
2. Widths—4, 6, 9, 12, 18, 24, 30, and 36 inches, plus or minus 1/4 inch, inside dimension.
   Overall widths shall not exceed inside width

Copyright National Electrical Manufacturers Association
Provided by IHS under license with NEMA
No reproduction or networking permitted without license from IHS
Not for Resale

more than four inches.

3. Depths—Inside depths shall be up to 6 inches, plus or minus 3/8 inch.
4. Fitting Radii—12, 24, and 36 inches.
5. Degrees of Arc for Elbows—30, 45, 60, and 90 degrees.

C. *Channel-type Trays*

1. Lengths of straight sections—10 or 20 feet plus or minus 1/4 inch.
2. Widths—3 inches through 12 inches plus or minus 3/8 inch inside dimension.
3. Depths 1 inch through 3 inches nominal outside depths.
4. Fitting Radii—12, 24, 36 inches.
5. Degrees of arc for elbows 30, 45, 60, and 90 degrees.
6. Ventilated or solid bottom.

NEMA Standard 8-20-1986.

3.4 PROTECTION OF CABLE INSULATION

The inside of fiberglass cable tray systems shall present no sharp edges, burrs, or projections which can damage cable insulation.

NEMA Standard 8-20-1986.

3.5 FITTINGS

The design and construction of fittings shall be based on the assumption that they will be supported in accordance with the recommendations given in 7.4 for support locations.

NEMA Standard 8-20-1986.

Section 4

PERFORMANCE STANDARDS AND CLASS DESIGNATIONS

4.1 WORKING (ALLOWABLE) LOAD CAPACITY

The working (allowable) load capacity represents the ability of a fiberglass cable tray to support the static weight of cables. It is equivalent to the destruction load capacity, as determined by testing in accordance with 5.1, with a minimum safety factor of 1.5.

NEMA Standard 8-20-1986.

4.2 LOAD/SPAN CLASS DESIGNATIONS

There shall be three working load classifications of fiberglass cable tray based on a 20 foot support span:

Class	Working Load
A	50 Lbs./Linear Ft.
B	75 Lbs./Linear Ft.
C	100 Lbs./Linear Ft.

NEMA Standard 8-20-1986.

Additional load/span data is shown in Table 4-1.

Table 4-1
ADDITIONAL LOAD/SPAN DATA

Support Span in Feet	Working Load in Lbs./Linear Foot		
	Class A	Class B	Class C
20	50	75	100
18	61	92	123
16	78	117	156
14	100	150	200
12	139	208	
10	200		

Authorized Engineering Information 8-20-1986.

Copyright National Electrical Manufacturers Association
Provided by IHS under license with NEMA
No reproduction or networking permitted without license from IHS
Not for Resale

4.3 EFFECT OF TEMPERATURE

Strength properties of reinforced plastics are reduced when continuously exposed to elevated temperatures. Working loads shall be reduced based on the following:

Temperature in Degrees F	Approximate Percent of Strength
75	100
100	90
125	78
150	68
175	60
200	52

NEMA Standard 8-20-1986.

If unusual temperature conditions exist, the manufacturer should be consulted.

Authorized Engineering Information 8-20-1986.

Section 5

TEST STANDARDS

5.1 DESTRUCTION LOAD TEST

5.1.1 Test Specimen

For each design of fiberglass cable trays, two unspliced straight specimens of the widest width shall be tested.

Differences in configuration of any part constitute a different design.

5.1.2 Type and Length of Span

Test spans shall be simple beam spans with free unrestrained ends. Trays shall not have side restraints. Spans shall be as specified plus or minus 1½ inches.

5.1.3 Orientation of Specimens

Specimens shall be tested in a horizontal position. The total length of the test specimen shall be not more than the specified span length plus 20 percent. Any overhang shall be equal.

5.1.4 Supports

Each end of the specimen shall be supported by a $1^{1}/_{8}$ inch wide by ¾ inch high steel bar(s) with a 120 degree "Vee" notch cut in its bottom to a depth of $^{3}/_{16}$ inch. The "Vee" notch shall rest on a 1 inch solid round steel bar which is welded at a maximum of 12 inches on center to a firm steel base.

5.1.5 Loading Material

Loading material shall be rectangular steel bars, ¾ " × 4" × 12" with a theoretical weight of 10.2 lbs. each.

5.1.6 Loading

All specimens shall be loaded to destruction. The load shall be applied in at least 10 increments which are approximately equal.

Loading shall be uniformly distributed for the length and breadth of the specimen except that the loading material shall be not closer than ½ inch nor further than 1 inch from the innermost elements of the side rails. It shall be arranged across the tray with a minimum of $^{3}/_{8}$ inch between stacks so that the loading material does not bridge transversely. All loading material shall be placed between the supports without overhanging.

For loading weights in a ladder-type tray, it shall be permissible to cover the bottom of the tray between supports with a flat sheet of No. 9 gauge flattened expanded metal not more than 3 feet long and with a wire hole size of ¾ inch, or a flat sheet of No. 16 gauge sheet steel not more than 3 feet long. The expanded metal or sheet steel shall not be fastened to the tray and shall be no closer than ½ inch to the side rails. The 3-foot lengths shall not overlap.The weight of the expanded metal or sheet steel shall be added to the total weight of the loading material.

Copyright National Electrical Manufacturers Association
Provided by IHS under license with NEMA
No reproduction or networking permitted without license from IHS
Not for Resale

5.1.7 Destruction Load Capacity

The total weight of the loading material on the fiberglass cable tray at the time it is destroyed shall be considered to be the destruction load capacity of the cable tray.

5.1.8 Interpolation and Extrapolation of Test Data

When allowable load and deflection data are determined by load tests, values for span lengths not tested shall be determined by interpolation from a curve based on values for a minimum of three tested span lengths. Extrapolation toward shorter span lengths is permissible but shall not be used for span lengths longer than the longest span length tested.

NEMA Standard 8-20-1986.

5.2 DEFLECTION TEST

The vertical deflection of the tray shall be measured at two points along the line midway between the supports and at right angles to the longitudinal axis of the tray. The two points of measurement shall be at the midpoint of the span of each side rail.

The average of these two readings shall be considered to be the vertical deflection of the tray.

For application information on deflection see 7.1.

NEMA Standard 8-20-1986.

Section 6

SPECIFICATIONS AND DRAWINGS

6.1 DATA TO APPEAR IN SPECIFICATIONS

The following minimum data, when applicable, should appear in all fiberglass cable tray specifications:

1. Class designation
2. Type (ladder, trough, channel, and so forth)
3. Material
4. Rung spacing
5. Inside depth
6. Radius (if same throughout)
7. Accessories.

Authorized Engineering Information 8-20-1986.

6.2 DATA TO APPEAR ON DRAWINGS

The following minimum data should appear on all fiberglass cable tray drawings:

1. Type (ladder, trough, channel, and so forth)
2. Width
3. Straight section, fitting, or accessory
4. Radii (mixed)
5. Elevation (note point of measurement)
6. Vertical and horizontal changes in position
7. Clearances—vertical and horizontal
8. Number of trays
9. Supports.

Authorized Engineering Information 8-20-1986.

Copyright National Electrical Manufacturers Association
Provided by IHS under license with NEMA
No reproduction or networking permitted without license from IHS
Not for Resale

Section 7

APPLICATION INFORMATION

7.1 DEFLECTION

Under normal applications, deflection limitations should not be included in design criteria for fiberglass cable tray systems. However, if unusual or special conditions exist, the manufacturer should be consulted. Limitations of deflection for aesthetic purpose only can result in an overdesigned tray system.

Authorized Engineering Information 8-20-1986.

7.2 FITTINGS

Changes in direction should be mechanically continuous and accomplished by use of fittings having dimensions in accordance with 3.3.

Authorized Engineering Information 8-20-1986.

7.3 SUPPORTS

Supports for fiberglass cable trays should provide a strength and working load capacity sufficient to meet the load requirement of the cable tray systems.

1. Horizontal and vertical tray supports should provide an adequate bearing surface for the tray and should have provisions for holddown clamps or fasteners.
2. In addition, vertical tray supports should provide secure means for fastening cable trays to supports.

Authorized Engineering Information 8-20-1986.

7.4 SUPPORT LOCATIONS

7.4.1 General

Supports should be located whenever practical so that connectors between horizontal straight sections of fiberglass cable tray runs fall between the support point and the quarter point of the span. Unspliced straight sections should be used on all simple spans and on end spans of continuous span arrangements. A support should be located 2 feet on each side of an expansion connector.

7.4.2 Horizontal Fiberglass Cable Tray Fittings

1. Horizontal Elbow Supports (see Figure 7-1)—Supports for horizontal tray fittings should be placed within 2 feet of each fitting extremity, and as follows:
   a. 90-degree supports at the 45-degree point of arc.
   b. 60-degree supports at the 30-degree point of arc.
   c. 45-degree supports at the 22-1/2 degree point of arc (except for the 12-inch radii).
   d. 30-degree supports at the 15-degree point of arc (except for the 12-inch radii).
2. Horizontal Tee Supports (See Figure 7-2)—Within 2 feet of each of the three openings connected to other cable tray items for 12-inch radius. On all other radii, at least one support should also be placed under each side rail of the horizontal tee, preferably as shown in Figure 7-2.
3. Horizontal Cross Supports (See Figure 7-3)—Within 2 feet of each of the four openings connected to other cable tray items for the 12-inch radius. On all other radii, at least one support should also be placed under each side rail of the horizontal cross, preferably as shown in Figure 7-3.
4. Horizontal Wye Supports (See Figure 7-4)—Within 2 feet of each of the three openings connected to other cable tray items, and at 22-1/2 degree point of the arc adjacent to the side branch.
5. Reducer Supports (See Figures 7-5 and 7-6)—Within 2 feet of each fitting extremity.

7.4.3 Vertical Fiberglass Cable Tray Elbows (See Figure 7-7)

Vertical fiberglass cable tray elbows at the top of runs should be supported at each end. Vertical fiberglass cable tray elbows at the bottom of runs should be supported at the top of the elbow, and within 2 feet of the lower extremity of the elbow.

7.4.4 Vertical Fiberglass Cable Tray Tees (See Figure 7-8)

Vertical Fiberglass cable tray tees should be supported within 2 feet of each fitting extremity.

7.4.5 Vertical Straight Lengths

Vertical straight lengths should be supported at intervals dictated by the building structure not exceeding 24 feet on centers.

7.4.6 Sloping Trays

Sloping trays should be supported at intervals not exceeding those for horizontal trays of the same design for the same installation.

Copyright National Electrical Manufacturers Association
Provided by IHS under license with NEMA
No reproduction or networking permitted without license from IHS
Not for Resale

7.4.7 Fittings as End of Run

A fitting which is used as an end of the run dropout should have a support attached to it, firmly reinforcing the fitting.

Authorized Engineering Information 8-20-1986.

7.5 THERMAL CONTRACTION AND EXPANSION

When expansion connectors are used, fiberglass cable tray should be permitted free longitudal movement at all support locations between expansion connectors except at one fixed location approximately halfway between the connectors.

Thermal contraction and expansion data are shown in Table 7-1.

Authorized Engineering Information 8-20-1986.

Table 7-1

EXPANSION OR CONTRACTION FOR VARIOUS TEMPERATURE DIFFERENCES

Temperature Differential Degrees F	Cable Tray Length for 1" Expansion	Cable Tray Length for Each Expansion Connector*
25	667 Feet	417 Feet
50	333 Feet	208 Feet
75	222 Feet	139 Feet
100	167 Feet	104 Feet
125	133 Feet	83 Feet
150	111 Feet	69 Feet
175	95 Feet	59 Feet

*The 1 inch slotted holes in each expansion connector allow 5/8 inch total expansion or contraction.

Authorized Engineering Information 8-20-1986.

7.6 WARNING! WALKWAYS

Inasmuch as fiberglass cable tray is designed as a support for power or control cables, or both, and is not intended or designed to be a walkway for personnel, the user is urged to display appropriate warnings cautioning against the use of this support as a walkway. The following language is suggested:

WARNING! Not to be used as a walkway, ladder or support for personnel. To be used only as a mechanical support for cables and tubing.

Authorized Engineering Information 8-20-1986.

Copyright National Electrical Manufacturers Association
Provided by IHS under license with NEMA
No reproduction or networking permitted without license from IHS
Not for Resale

SUPPORT LOCATIONS FOR FITTINGS

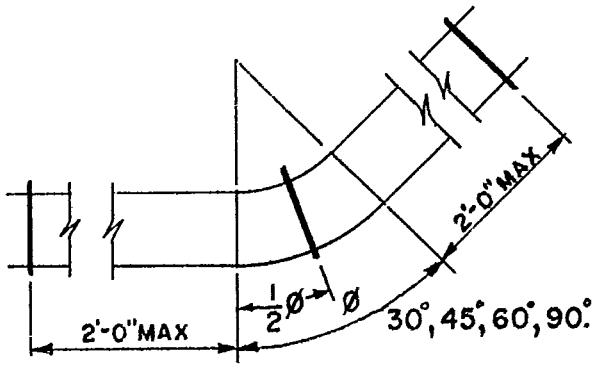

Figure 7-1
HORIZONTAL ELBOWS

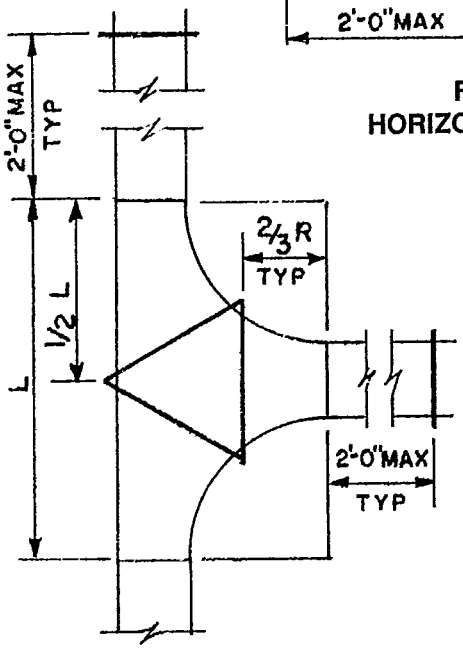

Figure 7-2
HORIZONTAL TEE

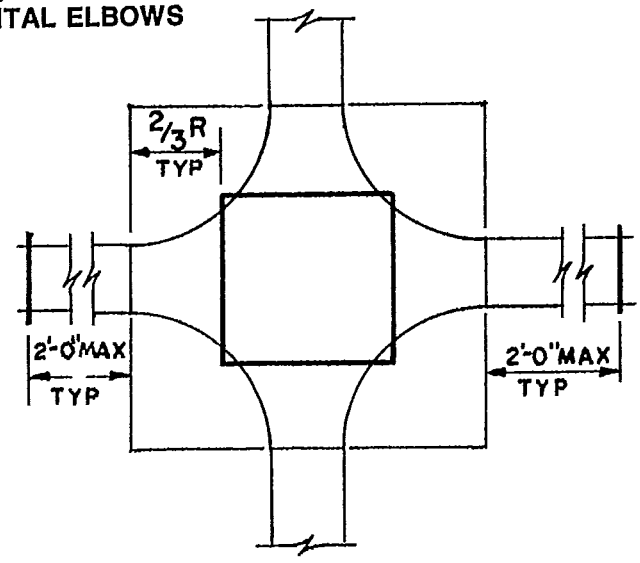

Figure 7-3
HORIZONTAL CROSS

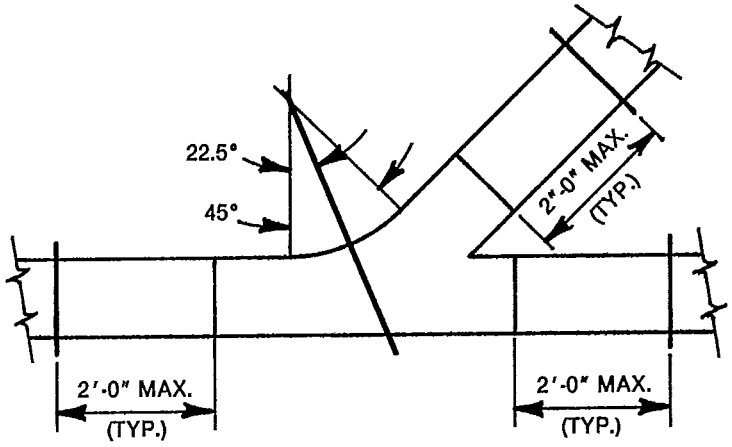

Figure 7-4
HORIZONTAL WYE

Copyright National Electrical Manufacturers Association
Provided by IHS under license with NEMA
No reproduction or networking permitted without license from IHS
Not for Resale

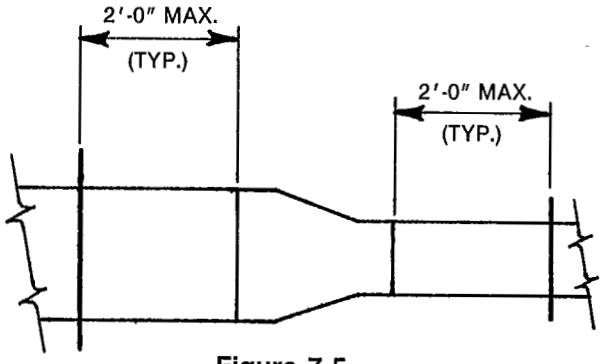

Figure 7-5
STRAIGHT REDUCER

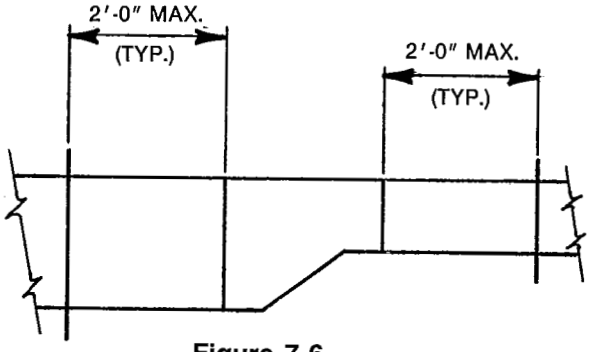

Figure 7-6
OFFSET REDUCER

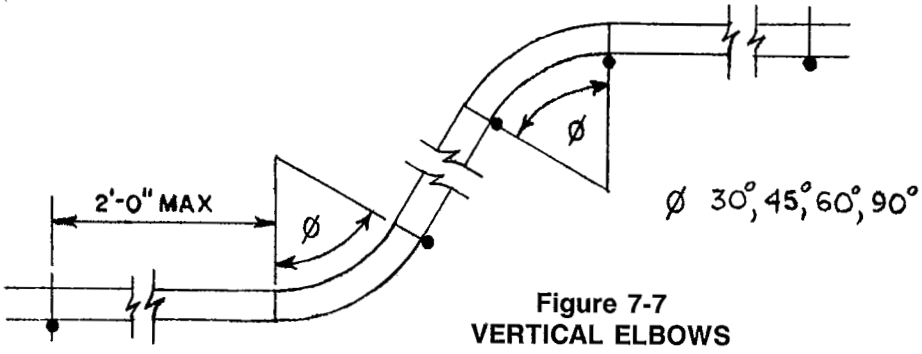

Figure 7-7
VERTICAL ELBOWS

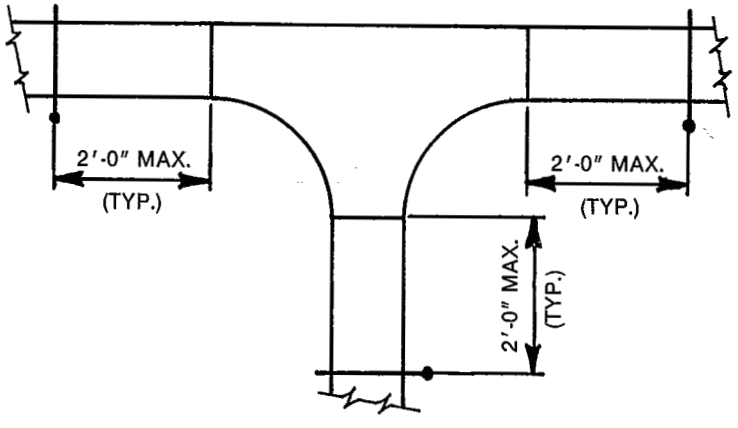

Figure 7-8
VERTICAL TEE

Copyright National Electrical Manufacturers Association
Provided by IHS under license with NEMA
No reproduction or networking permitted without license from IHS
Not for Resale

September 1984

NEMA STANDARDIZATION

The purpose of NEMA Standards, their classification and status are set forth in certain clauses of the NEMA Bylaws, which are quoted below:

Purpose of Standards

National Electrical Manufacturers Association Standards are adopted in the public interest and are designed to eliminate misunderstandings between the manufacturer and the purchaser and to assist the purchaser in selecting and obtaining the proper product for its particular need. Existence of a National Electrical Manufacturers Association Standard does not in any respect preclude any member or nonmember from manufacturing or selling products not conforming to the standard.

(Bylaw—Art. V, Sec. 1)

Definition of a Standard

A standard of the National Electrical Manufacturers Association defines a product, process or procedure with reference to one or more of the following: nomenclature, composition, construction, dimensions, tolerances, safety, operating characteristics, performance, rating, testing, and the service for which they are designed.

(Bylaw—Art. V, Sec. 2, Subsection A)

Dimensions

Where dimensions are given for interchangeability purposes, alternate dimensions satisfying the other provisions of the standards publication may be capable of otherwise equivalent performance.

(NEMA Policy Memorandum 84-2, dated June 7, 1984)

Classes of Standards

National Electrical Manufacturers Association Standards are of two classes:

1. NEMA Standard, which relates to a product commercially standardized and subject to repetitive manufacture, which standard has been approved by at least 90 percent of the members of the Subdivision eligible to vote thereon;
2. Suggested Standard for Future Design, which may not have been regularly applied to a commercial product, but which suggests a sound engineering approach to future development, which standard has been approved by at least two-thirds of the members of the Subdivision eligible to vote thereon.

(Bylaw—Art. V, Sec. 2, Subsection B)

Authorized Engineering Information

Authorized Engineering Information consists of explanatory data and other engineering information of an informative character not falling within the classification of NEMA Standard or Suggested Standard for Future Design.

(Bylaw—Art. V, Sec. 6, 1st Sentence)

Official Standards Proposal

An Official Standards Proposal is an official draft of a proposed standard which is formally recommended to an outside organization(s) for consideration, comment and/or approval.

(Bylaw—Art. V, Sec. 4, Subsection A)

Identification of Status

Standards in NEMA Standards Publications are identified in the foreword or following each standard as "NEMA Standard" or "Suggested Standard for Future Design." These indicate the status of the standard. These words are followed by a date which indicates when the standard was adopted in its present form by the Association.

The material identified as "Authorized Engineering Information" and "Official Standards Proposal" is designated similarly.

Copyright National Electrical Manufacturers Association
Provided by IHS under license with NEMA
No reproduction or networking permitted without license from IHS
Not for Resale

9009279 0001130 314

FIBERGLASS CABLE TRAY SECTION OF THE NATIONAL ELECTRICAL MANUFACTURERS ASSOCIATION

MEMBER COMPANIES

JBC Enterprises, Inc.
Houston, TX 77001

Robroy Industries, Inc.
Verona, PA 15147

Copyright National Electrical Manufacturers Association
Provided by IHS under license with NEMA
No reproduction or networking permitted without license from IHS
Not for Resale