National Electrical Manufacturers Association
2101 L Street, N.W. Suite 300
Washington, D.C. 20037 (202) 457-8400
Fax (202) 457-8411

TO: All holders of FG 1-1993

FROM: NEMA Communications Director

RE: Revision 1 to FG 1-1993

DATE: 13 February, 1995

Enclosed please find revision 1 to FG 1-1993. The old pages in your FG 1 should be removed and replaced with the corresponding pages included here to bring your standard up to date. A list of effective pages has been included as a guide to which pages in your standard are the most up to date. A new title page has also been included, reflecting your standard's updated status.

Copyright National Electrical Manufacturers Association
Provided by IHS under license with NEMA
No reproduction or networking permitted without license from IHS
Not for Resale

NEMA STANDARDS PUBLICATION NO. FG 1

nema

Fiberglass Cable Tray Systems

NEMA

NATIONAL ELECTRICAL MANUFACTURERS ASSOCIATION ■ 2101 L STREET, N.W., WASHINGTON, D.C. 20037

Copyright National Electrical Manufacturers Association
Provided by IHS under license with NEMA
No reproduction or networking permitted without license from IHS
Not for Resale

NEMA FG*1 93 ■ 6470247 0508696 274 ■

NEMA Standards Publication No. FG 1-1993

FIBERGLASS CABLE TRAY SYSTEMS

Revision No. 1, November, 1994

Published by

National Electrical Manufacturers Association
2101 L Street, N.W.
Washington, DC 20037

©1994 by National Electrical Manufacturers Association

Copyright National Electrical Manufacturers Association
Provided by IHS under license with NEMA
No reproduction or networking permitted without license from IHS

Not for Resale

FG 1-1993, Revision 1

List of Effective Pages

Pages with a revision number of 0 are originals. Pages with a revision number of 1 were altered in revision 1.

Page Number	Revision Number	Page Number	Revision Number
Table of Contents	0	7	0
i	0	8	0
1	0	9	0
2	0	10	0
3	1	11	0
4	0	12	0
5	1	13	0
6	0	14	0
		15	0

Copyright National Electrical Manufacturers Association
Provided by IHS under license with NEMA
No reproduction or networking permitted without license from IHS
Not for Resale

TABLE OF CONTENTS

Foreword i
Scope i

Section 1 REFERENCED STANDARDS AND DEFINITIONS 1

Section 2 MANUFACTURING STANDARDS
Materials 3
Supplemental Finishes 3
Dimensions 3
Protection of Cable Insulation 3
Fittings 3

Section 3 PERFORMANCE STANDARDS AND CLASS DESIGNATIONS
Working (Allowable) Load Capacity 5
Load/Span Class Designations 5
Effect of Temperature 5

Section 4 TEST STANDARDS
Destruction Load Test 7
Deflection Test 7

Section 5 SPECIFICATIONS AND DRAWINGS
Data to Appear in Specifications 9
Data to Appear on Drawings 9
Installation 9

Section 6 APPLICATION INFORMATION
Deflection 11
Fittings 11
Supports 11
Support Locations 11
Thermal Contraction and Expansion 12
Warning! Walkways 12

Copyright National Electrical Manufacturers Association
Provided by IHS under license with NEMA
No reproduction or networking permitted without license from IHS

Not for Resale

FOREWORD

This Standards Publication covers fiberglass cable tray systems. Its primary purpose is to encourage the manufacture and utilization of standardized fiberglass cable tray systems and to eliminate misunderstandings between manufacturers and users. This Standards Publication provides technical requirements concerning the construction, test, and performance of fiberglass cable tray systems. The development of this publication is the result of many years of research, investigation, and experience by the members of the Fiberglass Cable Tray Section of NEMA. Throughout the development of this publication, test methods and performance values have been related as closely as possible to end-use applications. Almost every item therein, when applied properly, contributes to safety in one way or another. The manufacturer of fiberglass cable tray systems in accordance with this publication is, however, only one factor in its safe use. Total safety involves the joint efforts of the various equipment manufacturers, the system designer, the installer, and the user.

The fiberglass cable tray system manufacturer has limited or no control over the following factors which are vital to a safe installation:

a. Environmental conditions
b. System design
c. Product selection and application
d. Installation practices
e. Maintenance of the system

This Standards Publication has been promulgated with a view toward promoting safety to persons and property by the proper selection and use of fiberglass cable tray systems. It has been developed through consultation among manufacturers and users, to result in improved serviceability, safety, and quality of fiberglass cable tray systems. This publication is in accordance with applicable provisions of the 1993 National Electrical Code, Article 318.

This publication will be periodically reviewed by the Fiberglass Cable Tray Section of NEMA for any revisions necessary to keep it up to date with advancing technology.

Comments or recommended revisions are welcomed and should be submitted to:

Vice President, Engineering Department
National Electrical Manufacturers Association
2101 L Street, N.W., Suite 300
Washington, D.C. 20037-1526

SCOPE

These standards cover continuous, complete fiberglass systems of ladder ventilated, solid-bottom cable tray or channel type trays, intended for the support of power or control cables, or both.

Copyright National Electrical Manufacturers Association
Provided by IHS under license with NEMA
No reproduction or networking permitted without license from IHS
Not for Resale

Section 1
REFERENCED STANDARDS AND DEFINITIONS

1.1 REFERENCED STANDARDS

The following publication is adopted, in whole or in part as indicated, by reference in this Standards Publication.

American National Standards Institute (ANSI)
11 West 42nd Street
New York, NY 10036

National Fire Protection Association (NFPA)
Batterymarch Park
Quincy, MA 02269

ANSI/NFPA 70-1993 *National Electrical Code*

1.2 DEFINITIONS

1.2.1 Fiberglass Cable Tray System

A fiberglass cable tray system is an assembly of fiberglass reinforced plastic cable tray sections and accessories, that forms a rigid structural system to support cables.

1.2.2 Fiberglass Cable Tray Types

a. *Ladder type*

A ladder type fiberglass cable tray is a prefabricated fiberglass structure consisting of two longitudinal side rails connected by individual transverse members.

b. *Trough type*

A trough type fiberglass cable tray is a prefabricated fiberglass structure with a ventilated or solid bottom within integral or separate longitudinal side rails.

c. *Channel type*

A channel type cable tray is a pultruded fiberglass channel consisting of a ventilated or solid bottom with integral side rails.

1.2.3 Cable Tray Section

A fiberglass cable tray section is a single length of cable tray, either straight or formed as an elbow, tee, cross, and so forth.

1.2.4 Straight Section

A straight section is a fiberglass cable tray section which has no change in direction.

1.2.5 Fittings

Fiberglass cable tray fittings are sections which are joined to other cable tray sections for the purpose of changing the size or direction of the cable tray system.

1.2.6 Horizontal Elbow

A horizontal elbow is a fiberglass cable tray section which changes direction in the same plane.

1.2.7 Vertical Elbow (Inside or Outside)

A vertical elbow is a fiberglass cable tray section which changes direction to a different plane.

a. *Inside Vertical Elbow*

An inside vertical elbow changes direction upward from the horizontal plane.

b. *Outside Vertical Elbow*

An outside vertical elbow changes direction downward from the horizontal plane.

1.2.8 Horizontal Tee

A horizontal tee is a fiberglass cable tray section which is suitable for joining cable tray sections in three directions at 90-degree intervals in the same plane.

1.2.9 Horizontal Cross

A horizontal cross is a fiberglass cable tray section which is suitable for joining cable tray sections in four directions at 90-degree intervals in the same plane.

1.2.10 Reducer (Straight, Right Hand, Left Hand)

A reducer is a fiberglass cable tray section which is suitable for joining fiberglass cable tray sections of different widths in the same plane.

A straight reducer has two symmetrical offset sides.

A right-hand reducer, when viewed from the larger end, has a straight side on the right.

A left-hand reducer, when viewed from the larger end, has a straight side on the left.

Copyright National Electrical Manufacturers Association
Provided by IHS under license with NEMA
No reproduction or networking permitted without license from IHS
Not for Resale

1.2.11 Connector

A fiberglass cable tray connector is a device which joins fiberglass cable tray straight sections or fittings, or both.

The basic types of connectors are:

a. Rigid
b. Expansion
c. Adjustable

1.2.12 Accessories

Accessories are devices which are used to supplement the function of straight sections and fittings, and include such items as dropouts, covers, conduit adapters, hold-down devices, adjustable connectors, dividers, and the like.

1.2.13 Supports

A cable tray support is a device which provides adequate means for supporting fiberglass cable tray straight sections or fittings.

The basic types of cable tray supports are:

a. Cantilever bracket
b. Trapeze
c. Individual rod suspension

Copyright National Electrical Manufacturers Association
Provided by IHS under license with NEMA
No reproduction or networking permitted without license from IHS
Not for Resale

Section 2
MANUFACTURING STANDARDS

2.1 MATERIALS

Fiberglass cable trays shall be made of fiberglass (fiber glass reinforced plastic shapes) which is flame retardant, ultraviolet light resistant and which utilizes a surfacing veil for added corrosion protection in accordance with the current edition of the National Electrical Code, Article 318.

2.2 SUPPLEMENTAL FINISHES

All edges with exposed glass shall be sealed with a compatible resin coating.

2.3 DIMENSIONS

a. *Ladder-type trays*

1. Lengths of Straight Sections—20 feet ±3/16 inch, not including connectors if attached
2. Widths—6, 12, 18, 24, 30, and 36 inches, ±1/4 inch inside dimension
   Overall widths shall not exceed inside widths by more than 4 inches
3. Depths—Inside depths shall be 3 through 7 inches, ±3/8 inch
4. Rung Spacing on Straight Sections—6, 9, 12, or 18 inches on centers
5. Fitting Radii—12, 24, and 36 inches
6. Degrees of Arc for Elbows—30, 45, 60, and 90 degrees

b. *Trough-type Trays*

1. Lengths of Straight Sections—20 feet ±3/16 inch, not including connectors if attached
2. Widths—6, 12, 18, 24, 30, and 36 inches ±1/4 inch, inside dimension
   Overall widths shall not exceed inside width by more than four inches.
3. Depths—Inside depths shall be up to 6 inches, ±3/8 inch
4. Fitting Radii—12, 24, and 36 inches
5. Degrees of Arc for Elbows—30, 45, 60, and 90 degrees

c. *Channel-type Trays*

1. Lengths of straight sections—10 or 20 feet ±3/16 inch
2. Widths—3 inches through 12 inches ±3/8 inch inside dimension
3. Depths 1 inch through 3 inches nominal outside depths
4. Fitting Radii—12, 24, 36 inches
5. Degrees of arc for elbows—30, 45, 60, and 90 degrees
6. Ventilated or solid bottom

2.4 PROTECTION OF CABLE INSULATION

The inside of fiberglass cable tray systems shall present no sharp edges, burrs, or projections which can damage cable insulation.

2.5 FITTINGS

Fittings shall provide tangents for splicing. The design and construction of fittings shall be based on the assumption that they will be supported in accordance with the recommendations given in 6.4 for support locations.

Copyright National Electrical Manufacturers Association
Provided by IHS under license with NEMA
No reproduction or networking permitted without license from IHS
Not for Resale

Copyright National Electrical Manufacturers Association
Provided by IHS under license with NEMA
No reproduction or networking permitted without license from IHS

Not for Resale

Section 3
PERFORMANCE STANDARDS AND CLASS DESIGNATIONS

3.1 WORKING (ALLOWABLE) LOAD CAPACITY

The working (allowable) load capacity represents the ability of a fiberglass cable tray to support the static weight of cables. It is equivalent to the destruction load capacity, as determined by testing in accordance with 4.1, with a minimum safety factor of 1.5.

3.2 LOAD/SPAN CLASS DESIGNATIONS

There shall be three working load categories of cable tray:

a. 50 lb/linear ft (74.4 kg/m) (Symbol A)
b. 75 lb/linear ft (111.6 kg/m) (Symbol B)
c. 100 lb/linear ft (148.8 kg/m) (Symbol C)

and, four span categories of:

a. 8 feet (2.44 m)
b. 12 feet (3.66 m)
c. 16 feet (4.87 m)
d. 20 feet (6.09 m)

Utilizing these, the load/span class designations of Table 3-1 shall apply.

3.3 EFFECT OF TEMPERATURE

Strength properties of reinforced plastics are reduced when continuously exposed to elevated temperatures. The reduction of working loads for plastic composites at elevated temperatures is dependent on the construction material and process selected by the manufacturer. Therefore, the manufacturer should be consulted and shall provide performance data for the respective cable tray material as a function of temperature. The data shall be provided as an Approximate Percent of Strength at 75°F (24°C), (the benchmark at 100%) and in 25°F (14°C) increments to a minimum of 200°F (94°C).

Table 3-1
LOAD/SPAN CLASS DESIGNATIONS

Working Load	Support Span		Class Designation
Lb/ft	(kg/m)	Feet (m)	Per 3.1
50	(74.4)	8 (2.44)	8A
75	(111.6)	8 (2.44)	8B
100	(148.8)	8 (2.44)	8C
50	(74.4)	12 (3.66)	12A
75	(111.6)	12 (3.66)	12B
100	(148.8)	12 (3.66)	12C
50	(74.4)	16 (4.87)	16A
75	(111.6)	16 (4.87)	16B
100	(148.8)	16 (4.87)	16C
50	(74.4)	20 (6.09)	20A
75	(111.6)	20 (6.09)	20B
100	(148.8)	20 (6.09)	20C

NOTE 1 - The above working loads are for cable only; when considering applications requiring concentrated static load, see 6.2.

NOTE 2 - These designations do not apply to channel tray, and the manufacturer should be consulted.

Copyright National Electrical Manufacturers Association
Provided by IHS under license with NEMA
No reproduction or networking permitted without license from IHS
Not for Resale

Copyright National Electrical Manufacturers Association
Provided by IHS under license with NEMA
No reproduction or networking permitted without license from IHS

Not for Resale

Section 4
TEST STANDARDS

4.1 DESTRUCTION LOAD TEST

4.1.1 Test Specimen

For each design of fiberglass cable trays, two unspliced straight specimens of the widest width and 12 inches on center rung spacing shall be tested.

Differences in configuration of any part constitute a different design.

4.1.2 Type and Length of Span

Test spans shall be simple beam spans with free unrestrained ends. Trays shall not have side restraints. Spans shall be as specified ±1 inch.

4.1.3 Orientation of Specimens

Specimens shall be tested in a horizontal position. The total length of the test specimen shall be not more than the specified span length plus 20 percent. Any overhang shall be equal.

4.1.4 Supports

Each end of the specimen shall be supported by a 1⅛-inch wide by ¾-inch high steel bar(s) with a 120 degree "Vee" notch cut in its bottom to a depth of 3/16 inch. The "Vee" notch shall rest on a 1-inch solid round steel bar which is welded at a maximum of 12 inches on center to a firm steel base.

4.1.5 Loading Material

Loading material shall be rectangular steel bars, ¾ inch by 4 inches by 12 inches with a theoretical weight of 10.2 lb. each or steel strips with a maximum thickness of 1/8 inch, width 1-1/8 inch, and length 4 feet. When testing 12 foot spans or less.

4.1.6 Loading

All specimens shall be loaded to destruction. The load shall be applied in at least 10 increments which are approximately equal.

Loading shall be uniformly distributed for the length and breadth of the specimen except that the loading material shall be not closer than ½ inch nor further than 1 inch from the innermost elements of the side rails. It shall be arranged across the tray with a minimum of ⅜ inch between stacks so that the loading material does not bridge transversely. All loading material shall be placed between the supports without overhanging.

For loading weights in a ladder-type tray, it shall be permissible to cover the bottom of the tray between supports with a flat sheet of No. 9 gauge flattened expanded metal not more than 3 feet long and with a wire hole size of ¾ inch, or a flat sheet of No. 16 gauge sheet steel not more than 3 feet long. The expanded metal or sheet steel shall not be fastened to the tray and shall be no closer than ½ inch to the side rails. The 3-foot lengths shall not overlap.

4.1.7 Destruction Load Capacity

The total weight of the loading material on the fiberglass cable tray at the time it is destroyed shall be considered to be the destruction load capacity of the cable tray.

4.1.8 Interpolation and Extrapolation of Test Data

When allowable load and deflection data are determined by load tests, values for span lengths not tested shall be determined by interpolation from a curve based on values for a minimum of three tested span lengths. Extrapolation toward shorter span lengths is permissible but shall not be used for span lengths longer than the longest span length tested.

4.2 DEFLECTION TEST

The vertical deflection of the tray shall be measured at two points along the line midway between the supports and at right angles to the longitudinal axis of the tray. The two points of measurement shall be at the midpoint of the span of each side rail.

The average of these two readings shall be considered to be the vertical deflection of the tray.

For application information on deflection see 6.1.

Copyright National Electrical Manufacturers Association
Provided by IHS under license with NEMA
No reproduction or networking permitted without license from IHS

Not for Resale

Copyright National Electrical Manufacturers Association
Provided by IHS under license with NEMA
No reproduction or networking permitted without license from IHS

Not for Resale

Section 5
SPECIFICATIONS AND DRAWINGS

5.1 DATA TO APPEAR IN SPECIFICATIONS

The following minimum data, when applicable, should appear in all fiberglass cable tray specifications.

a. Class designation—span/load class (3.2)
b. Type (2.3)
c. Material (2.1)
d. Rung spacing (2.4)
e. Inside depth (2.3.3)
f. Radius (2.3.5)
g. Accessories

5.2 DATA TO APPEAR ON DRAWINGS

The following minimum data should appear on all fiberglass cable tray drawings.

a. Type (ladder, trough, channel, and so forth)
b. Width
c. Straight section, fitting, or accessory
d. Radii (mixed)
e. Elevation (note point of measurement)
f. Vertical and horizontal changes in position
g. Clearances—vertical and horizontal
h. Number of trays
i. Supports

5.3 INSTALLATION

Products manufactured in accordance with NEMA FG 1 shall be installed per the suggested installation guidelines therein.

Copyright National Electrical Manufacturers Association
Provided by IHS under license with NEMA
No reproduction or networking permitted without license from IHS

Not for Resale

Copyright National Electrical Manufacturers Association
Provided by IHS under license with NEMA
No reproduction or networking permitted without license from IHS
Not for Resale

Section 6
APPLICATION INFORMATION

6.1 DEFLECTION

Under normal applications, deflection limitations should not be included in design criteria for fiberglass cable tray systems. However, if unusual or special conditions exist, the manufacturer should be consulted. Limitations of deflection for aesthetic purpose only can result in an overdesigned tray system.

6.2 CONCENTRATED STATIC LOAD (if required by user)

A concentrated static load is not included in Table 3-2. Some user applications may require that a given concentrated static load may be imposed over an above the working load.

Such a concentrated static load represents a static weight applied between the side rails at midspan. When so specified, the concentrated static load may be converted to an equivalent, uniform load (W_o) in pounds per linear foot (kilograms per meter) using the formula:

$$W_o = \frac{2 \times (\text{Concentrated Static Load})}{\text{Span Length, ft.(m)}}$$

and adding to the static weight of cables in the tray. This combined load may be used to select a suitable load/span designation (see Table 3-2). If the combined load exceeds the working load shown in Table 3-2, the manufacturer should be consulted.

6.3 FITTINGS

Changes in direction should be mechanically continuous and accomplished by use of fittings having dimensions in accordance with 2.3.

6.4 SUPPORTS

Supports for fiberglass cable trays should provide a strength and working load capacity sufficient to meet the load requirement of the cable tray systems.

a. Horizontal and vertical tray supports should provide an adequate bearing surface for the tray and should have provisions for holddown clamps or fasteners.

b. Vertical tray supports should provide secure means for fastening cable trays to supports.

6.5 SUPPORT LOCATIONS

6.5.1 General

Supports should be located whenever practical so that connectors between horizontal straight sections of fiberglass cable tray runs fall between the support point and the quarter point of the span. Unspliced straight sections should be used on all simple spans and on end spans of continuous span arrangements. A support should be located 2 feet on each side of an expansion connector.

6.5.2 Horizontal Fiberglass Cable Tray Fittings

a. *Horizontal Elbow Supports* (see Figure 6-1)—Supports for horizontal tray fittings should be placed within 2 feet of each fitting extremity, and as follows.

1. 90-degree supports at the 45-degree point of arc
2. 60-degree supports at the 30-degree point of arc
3. 45-degree supports at the 22-1/2 degree point of arc (except for the 12-inch radii)
4. 30-degree supports at the 15-degree point of arc (except for the 12-inch radii)

b. *Horizontal Tee Supports* (See Figure 6-2)—Within 2 feet of each of the three openings connected to other cable tray items for 12-inch radius. On all other radii, at least one support should also be placed under each side rail of the horizontal tee, preferably as shown in Figure 6-2.

c. *Horizontal Cross Supports* (See Figure 6-3) — Within 2 feet of each of the four openings connected to other cable tray items for the 12-inch radius. On all other radii, at least one support should also be placed under each side rail of the horizontal cross, preferably as shown in Figure 6-3.

d. *Horizontal Wye Supports* (See Figure 6-4)—Within 2 feet of each of the three openings connected to other cable tray items, and at the 22½ degree point of the arc adjacent to the side branch.

e. *Reducer Supports* (See Figures 6-5 and 6-6) —Within 2 feet of each fitting extremity.

6.5.3 Vertical Fiberglass Cable Tray Elbows (See Figure 6-7)

Vertical fiberglass cable tray elbows at the top of runs should be supported at each end. Vertical fiberglass cable tray elbows at the bottom of runs should be supported at the top of the elbow, and within 2 feet of the lower extremity of the elbow.

Copyright National Electrical Manufacturers Association
Provided by IHS under license with NEMA
No reproduction or networking permitted without license from IHS
Not for Resale

6.5.4 Vertical Fiberglass Cable Tray Tees (See Figure 6-8)

Vertical fiberglass cable tray tees should be supported within 2 feet of each fitting extremity.

6.5.5 Vertical Straight Lengths

Vertical straight lengths should be supported at intervals dictated by the building structure not exceeding 24 feet on centers.

6.5.6 Sloping Trays

Sloping trays should be supported at intervals not exceeding those for horizontal trays of the same design for the same installation.

6.5.7 Fittings as End of Run

A fitting which is used as an end of the run dropout should have a support attached to it, firmly reinforcing the fitting.

6.6 THERMAL CONTRACTION AND EXPANSION

It is important that thermal contraction and expansion be considered when installing cable tray systems. The length of the straight cable tray runs and the temperature differential govern the number of expansion splice plates required (see Table 6-1).

The cable tray should be anchored at the support nearest to its midpoint between the expansion splice plates and secured by expansion guides at all other support location (See Figure 6-9). The cable tray should be permitted longitudinal movement in both directions from that fixed point.

Accurate gap setting at the time of installation is necessary for the proper operation of the expansion splice plates. The following procedure should assist the installer in determining the correct gap.

Step 1—Plot the highest expected tray temperature on the maximum temperature line (See Figure 6-10).

Step 2—Plot the lowest expected tray temperature on the minimum temperature line.

Step 3—Draw a line between the maximum and minimum points.

Step 4—Plot the tray temperature at the time of installation to determine the gap setting.

Table 6-1
EXPANSION OR CONTRACTION OF VARIOUS TEMPERATURE DIFFERENCES

Temperature Differential Degrees F	Cable Tray Length for 1" Expansion, Feet	Tray for Each Expansion Connector*, Feet
25	667	417
50	333	208
75	222	139
100	167	104
125	133	83
150	111	69
175	95	59

Note: For gap set and hold down/guide location, see installation instruction above.

*The 1-inch slotted holes in each expansion connector allow 5/8" total expansion or contraction.

When expansion connectors are used, fiberglass cable tray should be permitted free longitudinal movement at all support locations between expansion connectors except at one fixed location approximately halfway between the connectors.

Thermal contraction and expansion data are shown in Table 6-1.

6.7 WARNING! WALKWAYS

In as much as fiberglass cable tray is designed as a support for power or control cables, or both, and is not intended or designed to be a walkway for personnel, the user is urged to display appropriate warnings cautioning against the use of this support as a walkway. The following language is suggested.

"WARNING! Not to be used as a walkway, ladder or support for personnel. To be used only as a mechanical support for cables and tubing."

Copyright National Electrical Manufacturers Association
Provided by IHS under license with NEMA
No reproduction or networking permitted without license from IHS
Not for Resale

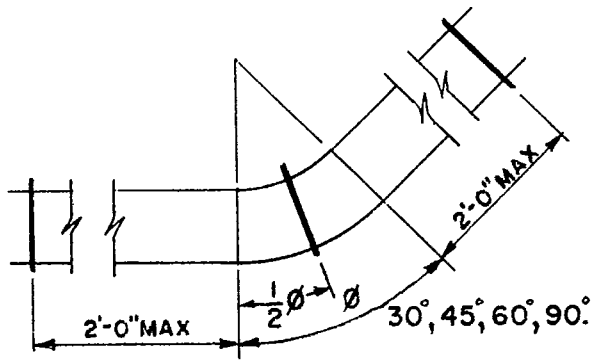

Figure 6-1
HORIZONTAL ELBOWS

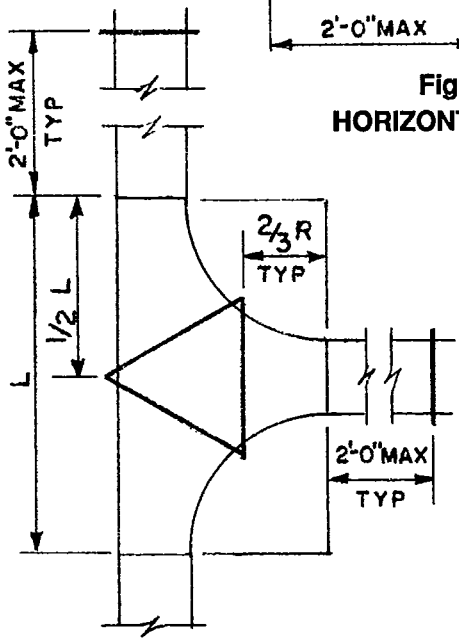

Figure 6-2
HORIZONTAL TEE

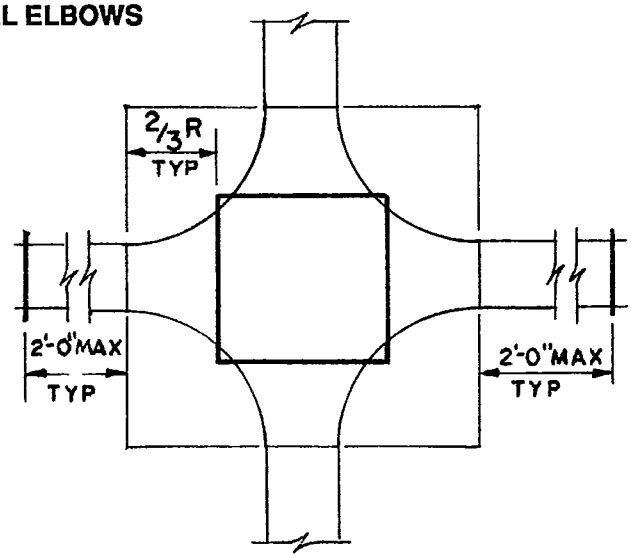

Figure 6-3
HORIZONTAL CROSS

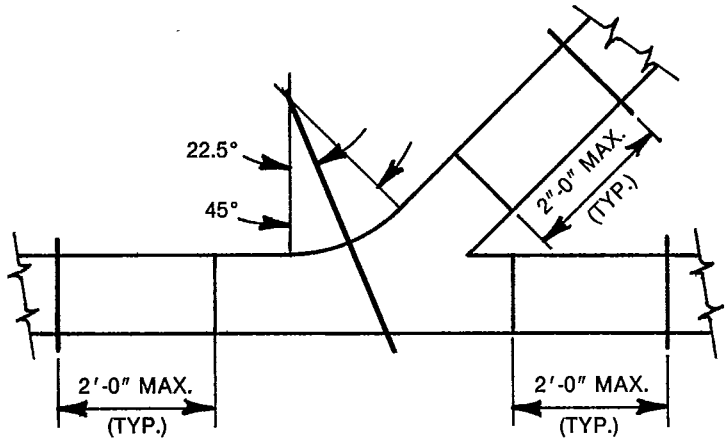

Figure 6-4
HORIZONTAL WYE

Copyright National Electrical Manufacturers Association
Provided by IHS under license with NEMA
No reproduction or networking permitted without license from IHS
Not for Resale

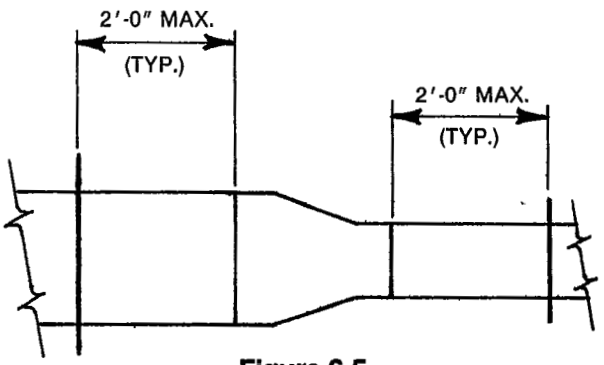

Figure 6-5
STRAIGHT REDUCER

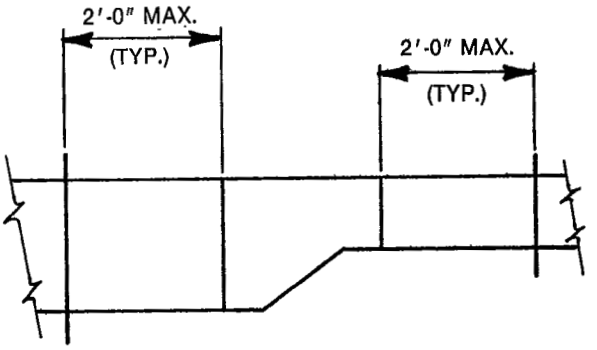

Figure 6-6
OFFSET REDUCER

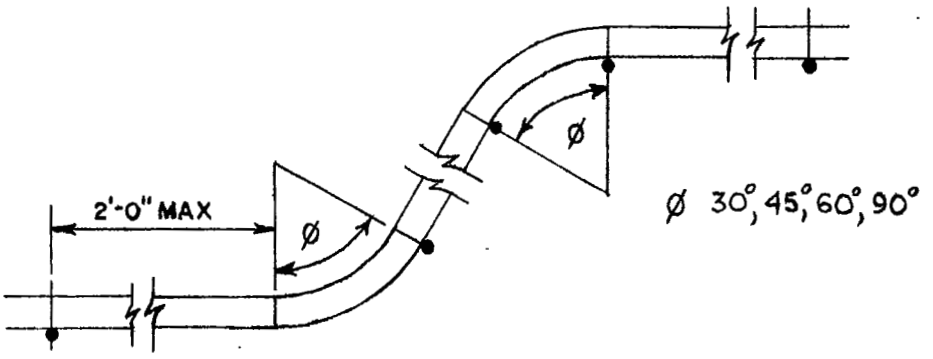

Figure 6-7
VERTICAL ELBOWS

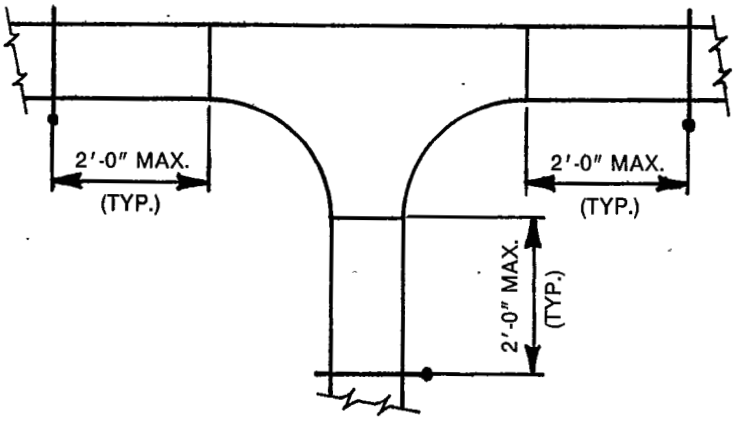

Figure 6-8
VERTICAL TEE

Copyright National Electrical Manufacturers Association
Provided by IHS under license with NEMA
No reproduction or networking permitted without license from IHS
Not for Resale

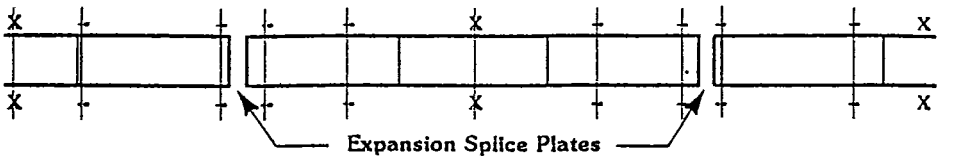

Figure 6-9
TYPICAL CABLE TRAY INSTALLATION

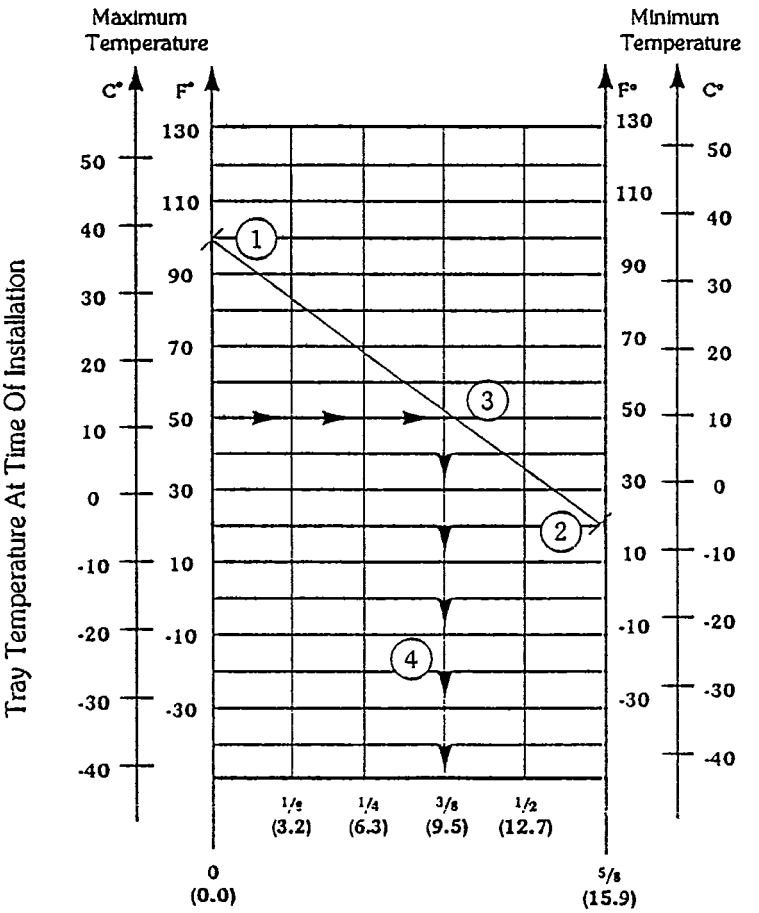

Figure 6-10
GAP SETTING

Copyright National Electrical Manufacturers Association
Provided by IHS under license with NEMA
No reproduction or networking permitted without license from IHS

Not for Resale

NEMA STANDARDIZIATION BACKGROUND

The purpose of NEMA standards, their classification, and status are set forth in certain clauses of the NEMA *Standardization Policies and Procedures* manual and are referenced below:

Purpose of Standards

National Electrical Manufacturers Association Standards are adopted in the public interest and are designed to eliminate misunderstandings between the manufacturer and the purchaser and to assist the purchaser in selecting and obtaining the proper product for their particular needs. Existence of a National Electrical Manufacturers Association Standard does not in any respect preclude any member or nonmember from manufacturing or selling products not conforming to the standard.

Definition of a Standard

A standard of the National Electrical Manufacturers Association defines a product, process, or procedure with reference to one or more of the following: nomenclature, composition, dimensions, tolerances, safety, operating characteristics, performance, rating, testing, and the service for which they are designed.

(Standardization Policies and Procedures, p. 1)

Dimensions

Where dimensions are given for interchangeability purposes, alternate dimensions satisfying the other provisions of the Standards Publication may be capable of otherwise equivalent performance.

(Standardization Policies and Procedures, p. 6)

Categories of Standards

National Electrical Manufacturers Association Standards are of three classes, which have received the affirmative vote of at least two-thirds of the Subdivision votes cast in the affirmative or negative:

1. NEMA Standard, which relates to a product, process, or procedure commercially standardized and subject to repetitive manufacture.
2. Suggested Standard for Future Design, which may not have been regularly applied to a commercial product, but which suggests a sound engineering approach to future development.
3. Adoptive Standard, which is adopted in whole or in part from the standards of another organization, either domestic, regional, or international.

(Standardization Policies and Procedures, pp. 5)

Authorized Engineering Information

Authorized Engineering Information consists of explanatory data and other engineering information of an informative character not falling within the classification of NEMA Standard or Suggested Standard for Future Design, which standard has received the affirmative vote of at least two-thirds of the Subdivision votes cast in the affirmative or negative.

(Standardization Policies and Procedures, pp. 5)

Identification of Status

Standards in NEMA Standards Publications are identified as "NEMA Standard," "Suggested Standard for Future Design," or "Adoptive Standard." These indicate the status of the standard. A statement incorporating the auxiliary verb "shall" indicates that compliance with a requirement is mandatory for compliance with the standard. These classes of standards are identified in the foreword or throughout the text.

The material identified as "Authorized Engineering Information" is designated similarly. Statements incorporating other auxiliary verbs such as "should," "may," etc. refer to the authorized engineering information and not to procedures required for compliance with the standard.

Copyright National Electrical Manufacturers Association
Provided by IHS under license with NEMA
No reproduction or networking permitted without license from IHS
Not for Resale

FIBERGLASS CABLE TRAY SECTION OF THE NATIONAL ELECTRICAL MANUFACTURERS ASSOCIATION

B-Line Systems, Inc.
Highland, IL 62249

Robroy Industries, Inc.
Verona, PA 15147

Enduro Fiberglass Systems
Houston, TX 77024

Copyright National Electrical Manufacturers Association
Provided by IHS under license with NEMA
No reproduction or networking permitted without license from IHS
Not for Resale