NEMA FB 2.20

Selection and Installation Guidelines for Fittings for Use with Flexible Electrical Conduit and Cable

Copyright National Electrical Manufacturers Association
Provided by IHS under license with NEMA
No reproduction or networking permitted without license from IHS
Not for Resale

--`,,`-`-`,,`,,`,`,,`---

Copyright National Electrical Manufacturers Association
Provided by IHS under license with NEMA
No reproduction or networking permitted without license from IHS

Not for Resale

NEMA Standards Publication FB 2.20-2003

Selection and Installation Guidelines for
Fittings for use with Flexible Electrical Conduit and Cable

Published by:

National Electrical Manufacturers Association
1300 North 17th Street, Suite 1847
Rosslyn, VA 22209

www.nema.org

© Copyright 2003 by the National Electrical Manufacturers Association. All rights including translation into other languages, reserved under the Universal copyright Convention, the Berne Convention for the Protection of Literary and Artistic Works, and the International and Pan American Copyright Conventions.

Copyright National Electrical Manufacturers Association
Provided by IHS under license with NEMA
No reproduction or networking permitted without license from IHS
Not for Resale

NOTICE AND DISCLAIMER

The information in this publication was considered technically sound by the consensus of persons engaged in the development and approval of the document at the time it was developed. Consensus does not necessarily mean that there is unanimous agreement among every person participating in the development of this document.

The National Electrical Manufacturers Association (NEMA) standards and guideline publications, of which the document contained herein is one, are developed through a voluntary consensus standards development process. This process brings together volunteers and/or seeks out the views of persons who have an interest in the topic covered by this publication. While NEMA administers the process and establishes rules to promote fairness in the development of consensus, it does not write the document and it does not independently test, evaluate, or verify the accuracy or completeness of any information or the soundness of any judgments contained in its standards and guideline publications.

NEMA disclaims liability for any personal injury, property, or other damages of any nature whatsoever, whether special, indirect, consequential, or compensatory, directly or indirectly resulting from the publication, use of, application, or reliance on this document. NEMA disclaims and makes no guaranty or warranty, expressed or implied, as to the accuracy or completeness of any information published herein, and disclaims and makes no warranty that the information in this document will fulfill any of your particular purposes or needs. NEMA does not undertake to guarantee the performance of any individual manufacturer or seller's products or services by virtue of this standard or guide.

In publishing and making this document available, NEMA is not undertaking to render professional or other services for or on behalf of any person or entity, nor is NEMA undertaking to perform any duty owed by any person or entity to someone else. Anyone using this document should rely on his or her own independent judgment or, as appropriate, seek the advice of a competent professional in determining the exercise of reasonable care in any given circumstances. Information and other standards on the topic covered by this publication may be available from other sources, which the user may wish to consult for additional views or information not covered by this publication.

NEMA has no power, nor does it undertake to police or enforce compliance with the contents of this document. NEMA does not certify, test, or inspect products, designs, or installations for safety or health purposes. Any certification or other statement of compliance with any health or safety–related information in this document shall not be attributable to NEMA and is solely the responsibility of the certifier or maker of the statement.

Copyright National Electrical Manufacturers Association
Provided by IHS under license with NEMA
No reproduction or networking permitted without license from IHS
Not for Resale

CONTENTS

Page

Foreword iv
Introduction v
Product Standards and Installation Codes vi

Section 1 FITTINGS FOR USE WITH ARMORED CABLE (TYPE AC)
1.1 Fitting Selection 1
1.1.1 Environmental Considerations 1
1.2 Required Marking 1
1.3 Grounding 2
1.4 Cable Preparation and Fitting Assembly Technique 2
1.4.1 Stripping Armor 3
1.4.2 Inserting Cable 3
1.4.3 Seating a Securement Clamp 3
1.4.4 Tightening Torque 4
1.5 Attachment to Boxes or Enclosures and Support 4
1.5.1 Attachment to Unthreaded Entries 4
1.5.2 Attachment to Threaded Entries 4
1.5.3 Supports 3
1.6 Verification of Installation 4
Figures
1-1 Typical Designs of AC Fittings, Clamp Type 6
1-2 Typical Design of AC Fitting, Direct Bearing 7
1-3 Typical Design of Integral Box Clamp for AC 7
1-4 Cut Ends of Armored Cable 8
1-5 Armored Cable Securement Clamp 8
1-6 Typical Armored Cable Supports 9

Section 2 FITTINGS FOR USE WITH FLEXIBLE METAL CONDUIT (TYPE FMC)
2.1 Fitting Selection 10
2.2 Required Marking 11
2.3 Grounding 11
2.4 Conduit Preparation and Fitting Assembly Technique 12
2.4.1 Cutting Conduit 12
2.4.2 Inserting Conduit 12
2.4.3 Seating a Securement Clamp 13
2.4.4 Tightening Torque 13
2.5 Attachment to Boxes or Enclosures and Support 13
2.5.1 Attachment to Unthreaded Entries 13
2.5.2 Attachment to Threaded Entries 14
2.5.3 Support 14
2.6 Verification of Installation 14
Figures
2-1 Typical Designs of FMC Fittings, Clamp Type 15
2-2 Typical Designs of FMC Fittings, Direct-Bearing Screw Type 16
2-3 Typical Designs of FMC Fittings, Screw-In Type 16
2-4 Typical Design of Integral Box Clamp for FMC 17
2-5 Cut Ends of Flexible Metal Conduit 18
2-6 Flexible Metal Conduit Securement Clamp 18
2-7 Typical Flexible Metal Conduit Supports 19

© Copyright 2003 by the National Electrical Manufacturers Association.

Copyright National Electrical Manufacturers Association
Provided by IHS under license with NEMA
No reproduction or networking permitted without license from IHS
Not for Resale

Section 3 FITTINGS FOR USE WITH METAL-CLAD CABLE (TYPE MC)
3.1 Fitting Selection....20
3.1.1 Environmental Considerations....20
3.2 Required Marking....21
3.2.1 Cable Range....21
3.3 Grounding....22
3.4 Cable Preparation and Fitting Assembly Technique....22
3.4.1 Stripping Armor....22
3.4.2 Inserting Cable....23
3.4.3 Seating a Securement Clamp....23
3.4.4 Tightening Torque....23
3.5 Attachment to Boxes or Enclosures and Support....24
3.5.1 Attachment to Unthreaded Entries....24
3.5.2 Attachment to Threaded Entries....24
3.5.3 Supports....24
3.6 Verification of Installation....25
Figures
3-1 Typical Designs of MC Fittings, Clamp Type....26
3-2 Typical Design of MC Fittings, Direct Bearing Tangential Screw Type....27
3-3 Typical Design of MC Fittings, Compression Gland Type....27
3-4 Typical Design of Integral Box Clamp for MC....28
3-5 Cut Ends of Metal-Clad Cable....28
3-6 Metal-Clad Cable Securement Clamp....29
3-7 Typical Metal-Clad Cable Supports....29

Section 4 LIQUIDTIGHT FLEXIBLE METAL CONDUIT (LFMC)
4.1 Fitting Selection....30
4.1.1 Environmental Considerations....30
4.2 Required Marking....31
4.3 Grounding....32
4.4 Conduit Preparation and Fitting Assembly Technique....32
4.5 Attachment to Boxes or Enclosures and Support....33
4.5.1 Attachment to Unthreaded Entries....33
4.5.2 Attachment to Threaded Entries....33
4.5.3 Support....34
4.6 Verification of Installation....34
Figures
4-1 Typical Designs of Liquidtight Flexible Metal Conduit Fittings....35
4-2 Typical Liquidtight Flexible Metallic Conduit Supports....36

Section 5 FITTINGS FOR USE WITH LIQUIDTIGHT FLEXIBLE NONMETALLIC CONDUIT (LFNC)
5.1 Fitting Selection....37
5.1.1 Environmental Considerations....38
5.2 Required Marking....38
5.3 Grounding....39
5.4 Conduit Preparation and Fitting Assembly Technique....40
5.5 Attachment to Boxes or Enclosures and Support....40
5.5.1 Attachment to Unthreaded Entries....40
5.5.2 Attachment to Threaded Entries....41
5.5.3 Support....41
5.6 Verification of Installation....41
Figures
5-1 Typical Designs of Liquidtight Flexible Nonmetallic Conduit Fittings....42
5-2 Typical Liquidtight Flexible Nonmetallic Conduit Supports....43

© Copyright 2003 by the National Electrical Manufacturers Association.

Copyright National Electrical Manufacturers Association
Provided by IHS under license with NEMA
No reproduction or networking permitted without license from IHS
Not for Resale

Section 6 FITTINGS FOR USE WITH NONMETALLIC-SHEATHED CABLE (TYPE NM, NMC, NMS)
6.1 Fitting Selection....44
6.1.1 Environmental Considerations....45
6.2 Required Marking....45
6.3 Grounding....46
6.4 Cable Preparation and Fitting Assembly Technique....46
6.4.1 Inserting NM Cable....46
6.4.2 Cable Preparation....47
6.4.3 Seating a Securement Clamp....47
6.4.4 Screw Tightening Torque....47
6.5 Attachment to Boxes and Support....47
6.5.1 Attachment to Unthreaded Entries....47
6.5.2 Attachment to Threaded Entries....48
6.5.3 Supports....48
6.6 Verification of Installation....49

Figures
6-1 Typical Designs of NM Cable Fittings....50
6-2 Typical Design of Integral Box Clamp for NM Cable....51
6-3 Common NM Cable Support and Protection Products....52
6-4 Positioning NM Cable Under Staples....53

TABLES
Table 1 Trade Sizes and Metric Designators....54
Table 2 Standard Assembly Torque Values for AC, FMC, MC, and NM Cable Fittings....54
Table 3 Assembly Torque Values for Type LFMC Fittings....55
Table 4 Assembly Torque Values for LFNC Fittings....55

© Copyright 2003 by the National Electrical Manufacturers Association.

Copyright National Electrical Manufacturers Association
Provided by IHS under license with NEMA
No reproduction or networking permitted without license from IHS
Not for Resale

Foreword

The selection and installation guidelines provided herein offer practical information on correct product selection and industry recommend practices for the installation of fittings for flexible conduit or cable in accordance with the National Electrical Code®.

These guidelines have been developed by the NEMA Conduit Fittings Section, which periodically reviews them for any revisions necessary to address changing conditions, product listing and installation requirements, and technical progress. Comments for proposed revisions are welcomed and should be submitted to:

Vice President, Engineering
National Electrical Manufacturers Association
1300 North 17th Street, Suite 1847
Rosslyn, VA 22209
http://www.nema.org

At the time of approval, the Conduit Fittings Section of the National Electrical Manufacturers Association had the following members:

AFC Cable Systems—New Bedford, MA
Adalet-PLM, Division of Scott & Fetzer Co—Cleveland, OH
Appleton Electric, EGS Electrical Group—Skokie, IL
Arlington Industries, Inc.—Scranton, PA
Bridgeport Fittings, Inc.—Bridgeport, CT
Carlon, Lamson & Sessions—Cleveland, OH
Cooper B-Line—Highland, IL
Crouse-Hinds—Syracuse, NY
Erico, Inc.—Solon, OH
IPEX, Inc.—Mississauga, ON, Canada
Kellems Division, Hubbell Incorporated—Stonington, CT
Killark Electric Manufacturing Company, Hubbell Incorporated—St. Louis, MO
Minerallac Electric Company—Addison, IL
Neer Manufacturing, EGS Electrical Group—Lexington, OH
O-Z/Gedney Company, EGS Electrical Group—Terryville, CT
Pass & Seymour/Legrand—Syracuse, NY
Progressive Machine Die, Inc.—Walton Hills, OH
Producto Electric Corporation—Orangeburg, NY
Red Dot Division, L E Mason Company—Boston, MA
Raco, Hubbell Incorporated—South Bend, IN
Regal Manufacturing, Division of Creftcon Industries—Industry, CA
Steel City—Memphis, TN
Steel Electric Products Company, Inc.—Brooklyn, NY
Thepitt Electrical Products, Crouse-Hinds—Meadow Lands, PA
Thomas & Betts Corporation—Memphis, TN

© Copyright 2003 by the National Electrical Manufacturers Association.

Copyright National Electrical Manufacturers Association
Provided by IHS under license with NEMA
No reproduction or networking permitted without license from IHS
Not for Resale

Introduction

It is a common perception that in any continuous system, the joints (splices, taps, couplings, and connections) are the weakest link. In fact, specifically by design, this is not usually the case. In order to achieve this design performance, variables such as *selection, preparation*, and *assembly technique* must be considered. We know it is not practical to have a system without splices, joints, and terminations, and so we strive to build in safety where these occur.

The expectations and demands on our electrical raceway systems have evolved throughout the twentieth century. Metallic conduit raceway systems (conduit, fittings, and enclosures) originally intended just to provide mechanical protection for circuit conductors are now often relied upon to carry potentially dangerous fault currents. Flexible metallic and nonmetallic conduit and metallic and composite cable systems have been introduced to meet ever-changing market needs. Emerging manufacturing technology and economic pressures have resulted in noticeable changes to some system components. Because of this evolution, sole reliance on the historical mechanical evaluation criteria of the system's components is of increasing concern to those charged with approving an installation. These concerns are very often evidenced through product standards development and installation code processes.

Along with evolving manufacturing technology, improved and new materials and processes are used in the manufacture of conduit and cable fittings. Considering the variety of materials, such as steel, iron, aluminum, zinc, and engineered plastics, the industry has come a long way in providing numerous options to solve an infinite number of applications. Over the years, NEMA member companies that manufacturer conduit and cable fittings have met the needs of the market with new and innovative product designs that continue to live up to higher standards demanded by the market.

These guidelines are written by the NEMA Conduit Fittings Section (5-FB). They provide installers and inspectors with an industry perspective of what has changed and what has not, how product standards have evolved with technology and product changes, and some of our industry's concerns and challenges as we move into the 21st century. The member companies of the NEMA Conduit Fittings Section promote the selection and installation of listed conduit and cable fittings, listed conduit and cable, and associated supports. Listing of electrical system components qualifies them to minimum performance requirements and provides for ongoing conformity surveillance. Listed conduit and cable fittings can be recognized by the trademark of the qualified electrical testing laboratory on the part or its smallest unit container.

It is our objective to develop a closer liaison with the installers of our products and the professional electrical inspector. Through this liaison, we intend to provide uniform education and understanding as to the intended use and application of our products and to develop an alliance founded in trust that will enable us together to address and resolve the concerns and challenges we each face.

NOTE–All references to the *National Electrical Code*® are to the 2002 Edition. 1999 NEC Edition references are retained in brackets [ ].

© Copyright 2003 by the National Electrical Manufacturers Association.

Copyright National Electrical Manufacturers Association
Provided by IHS under license with NEMA
No reproduction or networking permitted without license from IHS
Not for Resale

Product Standards and Installation Codes

Conduit and cable fittings for use in “ordinary” locations (locations not classified as hazardous) in the U.S. are typically designed and manufactured to meet the requirements of National Electrical Manufacturers Association Standards Publication ANSI/NEMA FB 1, *Fittings, Cast Metal Boxes, and Conduit Bodies for Conduit and Cable Assemblies*. “Listed” fittings are typically evaluated to Underwriters Laboratories Standard ANSI/UL 514B, *Fittings for Cable and Conduit.*

Conduit and cable fittings designed and manufactured to ANSI/NEMA FB 1 have fundamental design elements in common. NEMA conduit fittings manufacturers have agreed that these basic design and construction features are fundamental to safety, performance, inter-changeability, and system compatibility. Besides outlining the essential functional characteristics of conduit and cable fittings, ANSI/NEMA FB 1, as a voluntary consensus design standard, tends to be very specific in suggesting types of materials, acceptable wall thickness, corrosion protection, and other minimum criteria for metallic components and physical properties requirements for nonmetallic components.

An evaluation by a qualified electrical testing laboratory verifies that “listed” fittings contain essential design characteristics such as conduit end stops, conduit centering stops (for couplings), smooth-rounded wire entries, minimum corrosion protective coatings, and essential dimensions (e.g. throat diameters) that are within specified tolerances. A listed conduit or cable fitting can be identified by the distinctive trademark of the testing laboratory on the fitting itself and/or on the smallest unit container. Performance tests include mechanical sequences (e.g. assembly, bend tests, pull tests) and electrical tests (e.g. milli-volt drop before and after bend test in mechanical sequence, fault current test, electrical continuity test) designed to represent “real life” for these fittings both during installation and in service throughout the useful life of the system.

As one might imagine, these standards are dynamic and have changed over time to address the needs and expectations of the installer and the electrical inspector.

Among the changes in UL 514B in recent times, two very significant changes are as follows:

1. A fitting shall be investigated for use with conduit or cable of each type, size, wall thickness, and material, as recommended by the manufacturer; and

2. For a fitting that has been found acceptable for specific conditions of installation, for use with a specific conduit or cable construction, or for use with certain wiring systems, the condition of installation or the intended use shall be indicated by marking on the smallest-unit carton in which the product is packaged.

These standard revisions recognized that something had changed. They meet with the intent of *NEC*® Section 110.3(B) [110-3(b)] by providing the installer with necessary information. Given that all “listed” fittings have met the appropriate design and performance requirements, **Selection** of the right fitting for the application is the single most important factor leading to a safe, effective, and permanent installation. The way things used to be, “I’ve always used that fitting for this application," may not be the right way today! We have to get back to the fundamentals.

Beyond **Selection** of the right fitting for the application, almost every other variable comes down to good **workmanship**, something every craftsman takes pride in and that is fundamentally required by the *NEC*® Section 110.12 [110-12], and to **personal preference** in selecting optional features and benefits that distinguish alternative brands.

Several other significant revisions have been made to product standards in the recent past. We will cover the most important of these in the sections to follow. As you can begin to see, the conduit and cable fittings industry continues to meet each challenge as an integral component in our complex electrical distribution system.

© Copyright 2003 by the National Electrical Manufacturers Association.

Copyright National Electrical Manufacturers Association
Provided by IHS under license with NEMA
No reproduction or networking permitted without license from IHS
Not for Resale

Section 1
FITTINGS FOR USE WITH ARMORED CABLE (TYPE AC)

Armored cable (Type AC) is permitted for use in both exposed and concealed work for virtually all types of electrical systems and for branch circuits and feeders, where not subject to physical damage. AC cable is permitted for use only in dry locations or embedded in plaster finish on brick or other masonry. For a detailed description of the permitted uses of AC cable, refer to Article 320 [333] of the *NEC*®.

NEC® Section 250.118 [250-118] [250-91 of the 1996 *NEC*®] allows the armor of AC cable to serve as the equipment grounding conductor to ground metal boxes, enclosures, etc. of the electrical system to a single grounding point. The armor and aluminum bond wire in the armored cable combine with grounding type fittings to work together to assure a continuous path to ground.

The requirements for listed Armored Cable are found in ANSI/UL 4, *Armored Cable.*

1.1 FITTING SELECTION

Section 300.15 [300-15] of the *NEC*® requires that "Fittings and connectors shall be used only with the specific wiring methods for which they are designed and listed." Often, fittings listed for use with Armored Cable are also listed for use with Flexible Metal Conduit (Type FMC) and/or Metal Clad Cable (Type MC). The manufacturer's instructions, labels, and literature should be consulted to determine specific wiring methods for which the fitting is intended and "listed." Refer to the "Required Marking" section for guidance in identifying "listed" uses of such fittings.

Trade references for armored cable most often pertain to the number and trade size of the conductors (e.g. 14/2 indicates two 14 AWG conductors). Fittings for use with armored cable may also make reference to traditional trade sizes (e.g. 1/2(16), 3/4(21)). These typically refer to the knockout size in a box or enclosure into which the fitting is to be mounted.

Recently, metric designators were introduced that correspond to these traditional trade sizes. Table 1 provides a cross-reference of traditional trade sizes to these metric designators. Armored cable fittings are available in a variety of materials including fabricated steel, cast malleable iron, cast aluminum, and cast zinc. Selection of the material type of a fitting is a matter of design consideration, or personal preference as all "listed" fittings conform to the same minimum performance criteria. ANSI/UL 514B, *Conduit and Cable Fittings,* contains the requirements for listed Armored Cable fittings. Other industry standards pertaining to AC fittings are ANSI/NEMA FB 1, and Federal Specification A-A-50552.

Two general categories describe the means by which Armored Cable fittings attach to the cable to ensure a sound mechanical and electrical connection: *"clamp-type"* connectors (Figure 1-1) and connectors with *direct bearing (tangential type) screws* (Figure 1-2). *"Duplex"* connectors are available which enable one or two armored cables to be connected to a single knockout in an enclosure. All connectors employ a locknut or an integral feature as a means for securement and bonding to an enclosure. Outlet and switch boxes are also provided with *integral clamps* (Figure 1-3) that are intended for use with armored cable.

1.1.1 Environmental Considerations

Armored cable and fittings are not for use in wet locations or for direct burial in concrete or earth.

1.2 REQUIRED MARKING

UL 514B marking requirements provide the installer and the electrical inspector with basic information as to the specific wiring methods and applications for which a fitting has been found acceptable and "listed." The following is a summary of those markings for fittings listed for use with armored cable:

© Copyright 2003 by the National Electrical Manufacturers Association.

Copyright National Electrical Manufacturers Association
Provided by IHS under license with NEMA
No reproduction or networking permitted without license from IHS
Not for Resale

Cable Range	Not Rated for 14/2 AC Min	Not Rated for 14/2 AC Max	Rated for 14/2 AC Min	Rated for 14/2 AC Max
Marking	AC cable range and nominal diameter of smallest AC cable in range		14/2 and the largest trade size AC cable the fitting will accommodate, and the nominal diameter of the 14/2 AC cable.	
Example	**Armored Cable Connector 12/2 - 10/3 AC min. (0.xxx) O.D.**		**Armored Cable Connector 14/2 - 12/3 AC min. (0.xxx) O.D. or Armored Cable Connector 14/2 min. (0.xxx) O.D.**	
Explanation	Acceptable for use with steel or aluminum AC in a range from 12/2 to 10/3 trade size.		Acceptable for use with steel or aluminum AC in a range of 14/2 to 12/3 trade size, or for use with 14/2 AC trade size only.	

NOTE–The nominal dimension may be the actual dimension of the cable used when the fitting was tested.

Prior to February 1, 1999:

- A fitting rated only for 14/2 AC was not required to be marked with a trade size.
- A fitting rated for use with 14/2 and larger AC was not required to be marked with the largest trade size the fitting would accommodate.
- A fitting was not required to be marked with the diameter dimension for the smallest acceptable armored cable.

Armored cable fittings, especially in the smaller trade sizes, may not be practically marked to conform to the requirements for permanence and legibility. In such cases, displaying these markings on the product's smallest unit shipping container or installation instructions is permitted.

Clamps or connectors furnished as part of an outlet box in accordance with UL514A or UL514C are marked, on the clamp or connector, to indicate the application for which they are intended.

Example: "A" for Armored Cable

1.3 GROUNDING

As previously stated, *NEC*® Article 250 [250] permits Armored Cable to serve as the equipment grounding conductor, to ground metal boxes, enclosures, etc., of the electrical system to a single grounding point. Until February 1, 1996, listed fittings and box clamps were automatically assumed acceptable for equipment grounding in conjunction with listed armored cable. Since then, however, all "listed" fittings for use with armored cable have been required to pass a "current test" simulating ground fault conditions. This qualification provides further assurance in the system's ability to perform under fault current conditions.

When fittings are not "grounding type," grounding and bonding bushings, locknuts, wedges, or other fittings listed for the purpose are to be used.

1.4 CABLE PREPARATION AND FITTING ASSEMBLY TECHNIQUE

Performance test methods for Armored Cable fittings are designed to recognize the variability inherent in field applications. The most efficient assembly of an armored cable and fitting system can be achieved, and optimum performance ensured, by adherence to a few simple cable preparation and assembly techniques:

© Copyright 2003 by the National Electrical Manufacturers Association.

Copyright National Electrical Manufacturers Association
Provided by IHS under license with NEMA
No reproduction or networking permitted without license from IHS
Not for Resale

- Square the end of the metal jacket.
- Insert appropriate sized anti-short (armored cable) bushing.
- Insert cable armor so that it is flush with the fitting's end stop.
- Assure seating of clamp on armor jacket before torquing.
- Take care when torquing the fitting's securement screw.

For cable preparation, always follow the cable manufacturer's instructions.

The mechanical and electrical performance of a fitting for Armored Cable is dependent on an adequate, secure, and clean bearing surface for the fitting's securement screw or clamp. Most experienced electrician's recognize that armored cable is different on each end. Since the interlocked armor is wound in one direction, the convolutions on one end sometimes have a tendency to open when a fitting is tightened while the other end tends to remain more closed. Armored cable fittings are designed to assemble to either end of the cable.

1.4.1 Stripping Armor

Specialized tools are available and widely used for stripping the armor from armored cable. These tools are efficient and effective in safely removing the armor to expose the conductors necessary for making connections. Unfortunately, their use always results in a sharp angle cut on the end of the sheathing and often cuts partially through the next remaining full convolution of the armor. Whether or not one of these specialized tools is used, the best and most effective fitting assembly is assured when the armor jacket is squared by carefully cutting off the angled edge and any damaged convolutions using a pair of diagonal pliers, a hack saw, or the like. If this important step is not taken, complete seating of the cable into the fitting, securement of the anti-short bushing, and a secure bearing surface for the fitting's securement screw or clamp cannot be assured (See Figure 1-4). Take care not to cut or scar the insulation on individual conductors when stripping the armor.

1.4.2 Inserting Cable

Product standards call for armored cable fittings to have a smooth end stop that will not allow the cable assembly to be pulled through. When assembling a connector to the cable, be certain that the end of the cable is completely inserted in the fitting and is flush against the end stop. This ensures that the required anti-short bushing is secure and that the cut end of the cable will not open under pressure when torquing the securement screw. The diameter of the end stop in a listed Armored Cable fitting is not restricted to a specific range. It must, however, be of a size that will prohibit the cable armor from being pulled through. Combination fittings listed for 3/8 (12) flexible metal conduit, in addition to armored cable, may have a smaller end stop diameter than a similar fitting specifically listed for armored cable. This can cause difficulty in feeding the conductors of larger sizes of armored cable within the fitting's acceptable range. Selection of the proper fitting to match the trade size of the cable cannot be overemphasized.

Armored Cable fittings that secure the cable by means of a *direct bearing (tangential type) screw* (Figure 1-2) are not intended for use with armored cable having an aluminum jacket. Clamp type or squeeze type fittings (Figure 1-1) are recommended for cable having aluminum armor jackets.

1.4.3 Seating a Securement Clamp

Where a fitting employs a clamp as the means to secure the cable, proper seating of the clamp to the cable's armor jacket is to be assured. Using the following method, the fitting's clamp will seat between the convolutions of the armor:

Hand tighten the fitting screw(s). Then slightly rotate the cable in the fitting. Where two screws are provided, they are to be alternately tightened until both are secure. The assembly shall then be visually inspected prior to applying the final torque to the screws to be certain the armor at the end of the cable remains flush with the fitting's end stop. (See Figure 1-5.)

© Copyright 2003 by the National Electrical Manufacturers Association.

Copyright National Electrical Manufacturers Association
Provided by IHS under license with NEMA
No reproduction or networking permitted without license from IHS
Not for Resale

1.4.4 Tightening Torque

The designed performance of armored cable fittings is dependent on adequately torquing the fitting's securement means, screw or clamp. By nature of its design, the interlocked armor jacket of armored cable may be susceptible to collapse from overtorquing of the fitting's securement means. Performance typically will not be enhanced and may be reduced when excessive torque is applied. The experienced electrician often has come to rely on the "measured by feel" approach when securing these fittings. Performance tests in the product standards for AC fittings prescribe testing under specific assembly torque (e.g. average hand tightening of a No. 10 screw with a manual screwdriver is represented by 35 lb.-in. [3.96 N-m] torque). Some fitting designs include a raised screw boss (See Figure 1-1.) It is usually not necessary or intended that the screw be tightened to the point that its head be in contact with the boss. The screws on certain fitting designs, particularly larger trade sizes, may offer more than one tightening option including screwdriver (slot, Phillips, or Robertson-square drive) and bolt head for wrench application (hex or square). Greater mechanical advantage and torque can generally be achieved with a wrench. Where both screwdriver and wrench application options are offered, torque should be limited to that which can be applied by the screwdriver.

NEMA advocates the use of torque indicating tools for the assembly of AC fittings. Care should be taken during the assembly of fittings not to puncture or deform the cable's armor, which may result in the presence of sharp edges in the wireway. Table 2 provides a complete reference of standard assembly torque values for Type AC fittings. If a manufacturer prescribes a tightening torque other than that in the standard as a condition for listing, that recommended assembly torque is to be marked on installation instructions or the smallest unit shipping container in which the fitting is provided.

1.5 ATTACHMENT TO BOXES OR ENCLOSURES AND SUPPORT

1.5.1 Attachment to Unthreaded Entries

Where armored cable is used, electricians usually fasten the boxes into position on the framing members before attaching the cable assembly. Armored cable and fittings manufacturers caution installers to be sure to allow for sufficient length of cable to enable sufficient armor to be removed to expose the prescribed length of conductor and complete seating of the armor against the fitting's end stop. This will minimize stress on the cable's interlocked armor or the cable to fitting connection during attachment to a box.

Armored cable fittings supplied with locknuts for attachment to a box or enclosure may be assembled first to either the cable or the box; attachment first to the cable is the preferred method. A secure attachment to a box or enclosure can be made when the locknut is hand tightened and then further tightened 1/4 turn using an appropriate tool. When securing the locknut, care is to be taken to avoid excessive pressure where gripping the body of the fitting is necessary. Assemble fittings supplied without locknuts to the cable and the box according to the manufacturer's installation instructions.

NOTE–Locknuts are not to be relied upon to penetrate nonconductive coatings on enclosures. Such coatings are to be removed in the locknut area prior to raceway assembly to assure that a continuous ground path is achieved.

1.5.2 Attachment to Threaded Entries

Armored Cable connectors having external threads may be installed into the threaded entries provided in certain boxes, enclosures, and conduit bodies. The external threads of armored cable fittings conforming to ANSI/NEMA FB 1 have straight threads (NPS). Threaded openings where these fittings may be installed may have either taper (NPT) or straight (NPS) threads, varying depth, and number of threads. Care must be taken to ensure that a minimum of 3 threads of the connector are fully engaged with the threads of the conduit entry when wrench tightened.

1.5.3 Supports

NEC® Article 320 [333] requires securement of armored cables at intervals not to exceed 1.4m (4-1/2 ft.) and within 300 mm (12 in.) of each box (note exceptions in Article 320 [333]). Securement in this manner prior to

© Copyright 2003 by the National Electrical Manufacturers Association.

Copyright National Electrical Manufacturers Association
Provided by IHS under license with NEMA
No reproduction or networking permitted without license from IHS
Not for Resale

assembly to a box or enclosure ensures that a minimum of strain will be placed on the cable to fitting and fitting to box connection during assembly and throughout the lifetime of the installation. Armored cable shall be supported at least at the frequency required by the *NEC*®, using raceway supports intended for the purpose, secured by hardware acceptable to the authority having jurisdiction.

A variety of straps, clamps, staples, and hangers are available which are specifically intended to secure Armored Cable and similar raceways (See Figure 1.6). These supports shall be installed only on cable of the trade size indicated on the support or its smallest unit shipping container. The variability of mounting surfaces, expected loads, and application environments will determine the appropriate support options and securement hardware. Design specifications usually calculate requirements based on maximum spacing intervals given in the *NEC*®. Closer support intervals than are required in the *NEC*® are an acceptable option to heavier supports and mounting hardware in some applications.

Armored cable fittings and typical support hardware are not designed to perform the function of conductor support in long vertical installations of large size armored cable (NEC 300.19 [300-19]). Often, bends are designed in such long vertical runs to relieve the strain on the conductor terminations. Consult with the armored cable manufacturer for alternative solutions.

1.6 VERIFICATION OF INSTALLATION

Loosening of raceway components is sometimes encountered during the construction process. Once the raceway is fully installed and supported, all fittings and locknuts should be re-examined for secureness. A continuity test is to be performed at each connection over the entire length of the raceway as a final means of inspection for secureness of all joints.

© Copyright 2003 by the National Electrical Manufacturers Association.

Copyright National Electrical Manufacturers Association
Provided by IHS under license with NEMA
No reproduction or networking permitted without license from IHS
Not for Resale





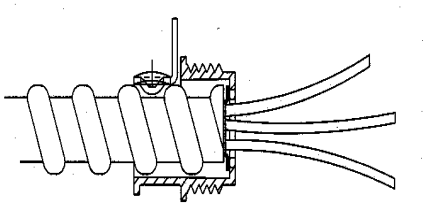

AC Single Screw - Clamp Connector

AC Squeeze Connector

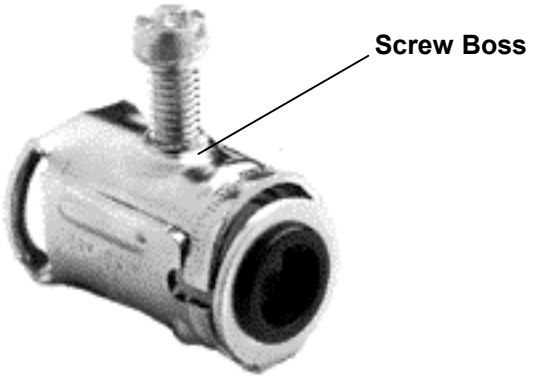



AC Connector (Without Locknut)

AC Duplex Connector (Without Locknut)



Twin Screw Type 90º Angle Connector

Figure 1-1
TYPICAL DESIGNS OF AC FITTINGS, CLAMP TYPE

© Copyright 2003 by the National Electrical Manufacturers Association.

Copyright National Electrical Manufacturers Association
Provided by IHS under license with NEMA
No reproduction or networking permitted without license from IHS
Not for Resale





Direct-Bearing Radial Type

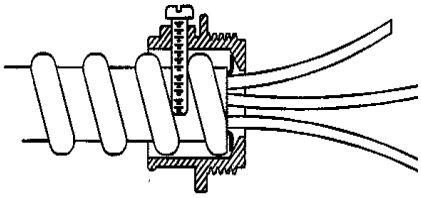

Direct-Bearing Tangential Type

Figure 1-2
TYPICAL DESIGN OF AC FITTING, DIRECT BEARING

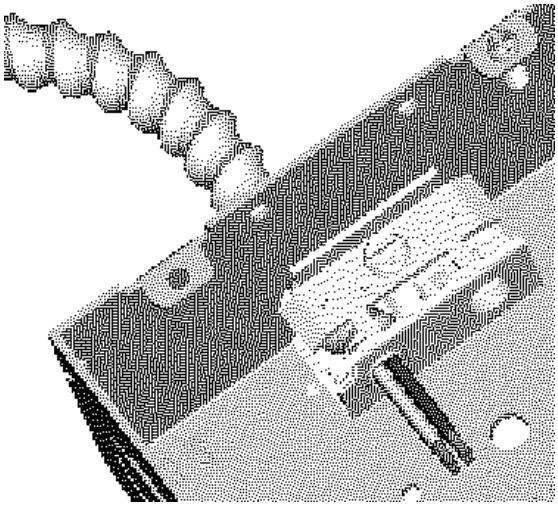

Figure 1-3
TYPICAL DESIGN OF INTEGRAL BOX CLAMP FOR AC

© Copyright 2003 by the National Electrical Manufacturers Association.

Copyright National Electrical Manufacturers Association
Provided by IHS under license with NEMA
No reproduction or networking permitted without license from IHS
Not for Resale

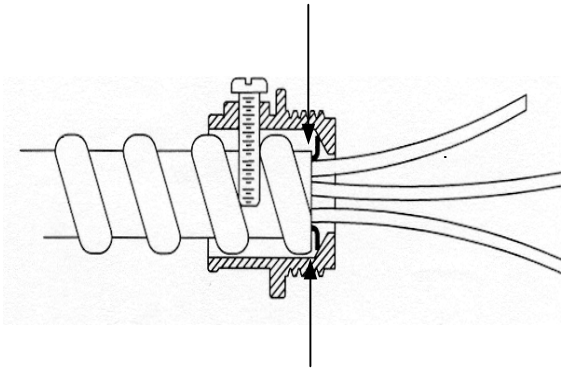

Correct Seating
(Cut end squared with pliers or hacksaw)

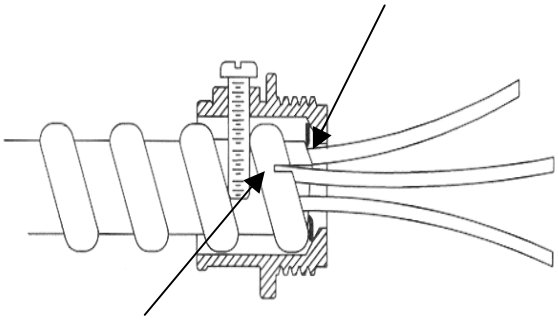

Incorrect Seating
(Cut end not properly squared)

Figure 1-4
CUT ENDS OF ARMORED CABLE

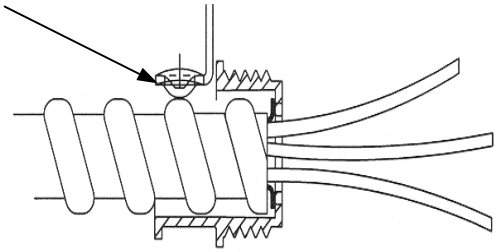

Incorrect Seating

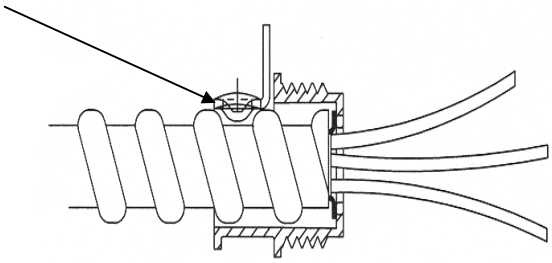

Correct Seating

Figure 1-5
ARMORED CABLE SECUREMENT CLAMP

© Copyright 2003 by the National Electrical Manufacturers Association.

Copyright National Electrical Manufacturers Association
Provided by IHS under license with NEMA
No reproduction or networking permitted without license from IHS
Not for Resale

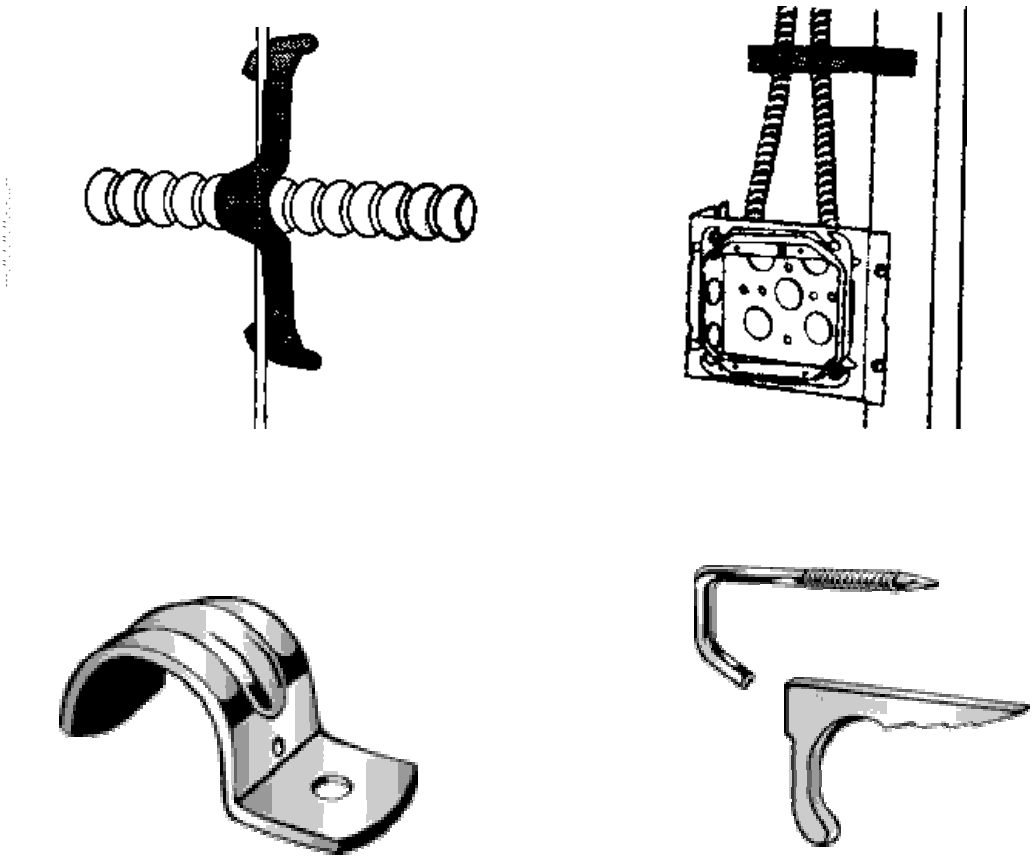

Figure 1-6
TYPICAL ARMORED CABLE SUPPORTS

© Copyright 2003 by the National Electrical Manufacturers Association.

Copyright National Electrical Manufacturers Association
Provided by IHS under license with NEMA
No reproduction or networking permitted without license from IHS
Not for Resale

Section 2
FITTINGS FOR USE WITH FLEXIBLE METAL CONDUIT (TYPE FMC)

Flexible Metal Conduit (FMC) is permitted for use in both exposed and concealed work for virtually all types of electrical systems and for branch circuits and feeders, where not subject to physical damage. FMC is permitted for use only in dry locations unless conductors are also approved for use in damp or wet locations. Flexible Metal Conduit smaller than 1/2 (16) trade size is not permitted, with the exception of 3/8 (12), which is allowed for specific applications. For a detailed description of the permitted uses of Flexible Metal Conduit, refer to the National Electrical Code (*NEC*®) Article 348 [350].

NEC® Section 250.118 [250-118] [Section 250-91 of the 1996 *NEC*®] allows Flexible Metal Conduit to serve as the equipment grounding conductor to ground metal boxes, enclosures, etc. of the electrical system to a single grounding point. Particular attention should be paid to the exceptions in this Section.

The requirements for listed Flexible Metal Conduit are found in ANSI/UL 1, *Flexible Metal Conduit*.

2.1 FITTING SELECTION

Section 300.15 [300-15] of the *NEC*® requires that "Fittings and connectors shall be used only with the specific wiring methods for which they are designed and listed." Often, fittings that are listed for use with Flexible Metal Conduit are also listed for use with Armored Cable (Type AC) and/or Metal-Clad Cable (Type MC). The manufacturer's instructions, labels, and literature should be consulted to determine the specific wiring methods for which the fitting is intended and "listed." Refer to the "Required Marking" section for guidance in identifying the "listed" uses of such fittings.

FMC fittings are referred to by the nominal trade size of the conduit for which they are designed, typically 1/2 (16) through 4 (103). Recently, metric designators were introduced, which correspond to these traditional trade sizes. Table 1 provides a cross-reference of traditional trade sizes to these metric designators.

Flexible Metal Conduit fittings are available in a variety of materials including fabricated steel, cast malleable iron, cast aluminum, and cast zinc. Selection of the material type of a fitting is a matter of design consideration or personal preference as all "listed" fittings conform to the same minimum performance criteria. ANSI/UL 514B, *Conduit and Cable Fittings,* contains the requirements for listed flexible metal conduit fittings. Other industry standards pertaining to FMC fittings are ANSI/NEMA FB 1 and Federal Specification A-A-50552.

Three general categories describe the means by which Flexible Metal Conduit fittings attach to the conduit to ensure a sound mechanical and electrical connection. *Clamp-type* connectors (Figure 2-1) are secured to the outside of the conduit. *Direct-bearing screw type* (Figure 2-2), and *screw-in type* connectors and couplings (Figure 2-3) thread inside the conduit. All connectors employ a locknut or an integral feature as a means for securement and bonding to an enclosure. Outlet and switch boxes are also provided with *integral clamps* for use with flexible metal conduit. (See Figure 2-4.) *"Transition couplings"* enable a Flexible Metal Conduit to be coupled to rigid metal conduit or EMT.

In 1977 a "reduced wall" flexible metal conduit was first listed. "Reduced wall" FMC (RWFMC) can have a minimum strip thickness 25 to 50% less than the original FMC, depending on the trade size. Many fittings on the market today were listed prior to 1977 using the original FMC.

Beginning in 1994, all manufacturers of fittings listed for use with Flexible Metal Conduit had their fittings reviewed for performance on reduced wall FMC. Today, fittings may be listed for use with any or all of the following types of FMC:

© Copyright 2003 by the National Electrical Manufacturers Association.

Copyright National Electrical Manufacturers Association
Provided by IHS under license with NEMA
No reproduction or networking permitted without license from IHS
Not for Resale

Original FMC	Reduced Wall FMC
Steel (FEFMC)	Steel (FERWFMC)
Aluminum (ALFMC)	Aluminum (ALRWFMC)

In 1995, Flexible Metal Conduit manufacturers also had their listed conduits re-evaluated. Using recently listed fittings, each type of FMC was subjected to the same mechanical tests as are required of the fittings. The result of these two retest programs provides renewed assurance that the intended performance of this raceway system is achieved and maintained.

2.2 REQUIRED MARKING

The UL 514B marking requirements provide the installer and the electrical inspector with basic information as to the specific wiring methods for which the fitting has been found acceptable, and "listed." A summary of those markings for fittings listed for use with Flexible Metal Conduit is provided in the table below.

Condition of Use or Installation	Carton Marking (a)
For use with Flexible Metal Conduit (all types)	FMC
For use with steel (FE) or aluminum (AL) FMC only	FEFMC or STEEL FMC
	ALFMC or ALUMFMC or ALUMINUMFMC
For use with reduced-wall FMC only (steel and aluminum)	RWFMC
For use with reduced-wall steel (FE) or aluminum (AL) FMC only	FE RWFMC or STEEL RWFMC
	AL RWFMC or ALUM RWFMC or ALUMINUM RWFMC

(a) The carton marking may be prefixed by "Suitable for" or "For" or may use the word "only," as desired or appropriate.

Flexible Metal Conduit fittings, especially in the smaller trade sizes, may not be practically marked to conform to the requirements for permanence and legibility. In such cases, these markings are permitted to be displayed on the product's smallest unit shipping container or installation instructions.

Clamps or connectors furnished as part of an outlet box in accordance with UL 514A or UL514C are marked, on the clamp or connector, to indicate the application for which it is intended.

Example: "F" For Flexible Metal Conduit

2.3 GROUNDING

As previously stated, *NEC*® Article 250 [250] permits Flexible Metal Conduit to serve as the equipment grounding conductor to ground metal boxes, enclosures, etc. of the electrical system to a single grounding point. Until February 1, 1996, listed FMC fittings through 1-1/4 (35) trade size were automatically assumed acceptable for equipment grounding in conjunction with listed FMC. Since then all listed fittings for use with flexible metal conduit have been required to pass a "current test" simulating ground fault conditions. Similarly, listed Flexible Metal Conduit has been re-evaluated for its fault current carrying capabilities with fittings listed

© Copyright 2003 by the National Electrical Manufacturers Association.

Copyright National Electrical Manufacturers Association
Provided by IHS under license with NEMA
No reproduction or networking permitted without license from IHS
Not for Resale

for the purpose. These new qualifications provide further assurance in the system's ability to perform under fault current conditions.

Wherever fittings are not of the "grounding type," grounding and bonding bushings, locknuts, wedges, or other fittings listed for the purpose are to be used.

2.4 CONDUIT PREPARATION AND FITTING ASSEMBLY TECHNIQUE

Performance test methods for FMC fittings are designed to recognize the variability inherent in field applications. The most efficient assembly of a flexible metal conduit and fitting system can be achieved, and optimum performance ensured, by adherence to a few simple conduit preparation and assembly techniques.

- Square the cut end of the metal conduit.
- Insert conduit so that it is flush with the fitting's end stop.
- Ensure seating of clamp on conduit before torquing.
- Take care when torquing the fitting's securement screw.

For conduit preparation, always follow the conduit manufacturer's instructions.

The mechanical and electrical performance of a fitting for Flexible Metal Conduit is dependent on an adequate, secure, and clean bearing surface for the fitting's securement screw or clamp. Most experienced electricians recognize that flexible metal conduit is different on each end. Since the interlocked armor is wound in one direction, the convolutions on one end sometimes have a tendency to open when a fitting is tightened while the other end tends to remain more closed. Flexible Metal Conduit fittings are designed to assemble to either end of the cable.

2.4.1 Cutting Conduit

Specialized tools are available and widely used to cut sections of Flexible Metal Conduit. These tools are efficient and effective in safely cutting through the convolutions. Unfortunately, their use always results in a sharp angle cut on the end of the conduit and often cuts partially through the next remaining full convolution. Regardless of whether one of these specialized tools is used, the most effective fitting assembly is ensured when the end of the conduit is squared by carefully cutting off the angled edge and any damaged convolutions using a pair of diagonal pliers, a hack saw, or the like. If this important step is not taken, complete seating of the conduit into the fitting, a smooth non-abrasive wire entry, and a secure bearing surface for the securement screw or clamp cannot be assured (see Figure 2-5).

2.4.2 Inserting Conduit

Product standards call for flexible metal conduit connectors to have a smooth end stop that completely encircles the end of the conduit. For fittings that secure to the outside of the conduit, be certain that the conduit is completely inserted in the fitting and is flush against the end stop. This ensures that the conduit is secure, the sharp cut end of the conduit is bushed by the fitting, and that the end of the conduit will not open under pressure when torquing the securement screw. When assembling a fitting that threads inside the conduit, be certain to fully thread the fitting until the conduit is flush against the external end stop of the fitting.

The diameter of the opening in the end stop of a listed fitting, of the type which secures to the outside of the conduit, is restricted based on the trade size of conduit for which it is listed. This requirement ensures effective bushing of the sharp end of the conduit and prevents it from being pulled through when the wires are pulled. Combination fittings listed for 3/8 (12) flexible metal conduit as well as armored cable may have a smaller end stop diameter than a similar fitting specifically listed for armored cable. This can cause difficulty in feeding the conductors of larger sizes of armored cable within the fitting's acceptable range. Selection of the proper fitting to match the trade size of the conduit or cable cannot be overemphasized.

© Copyright 2003 by the National Electrical Manufacturers Association.

Copyright National Electrical Manufacturers Association
Provided by IHS under license with NEMA
No reproduction or networking permitted without license from IHS
Not for Resale

2.4.3 Seating a Securement Clamp

Where a fitting employs a clamp as the means to secure the conduit, proper seating of the clamp to the conduit is to be ensured. Using the following method, the fitting's clamp will seat between the convolutions of the conduit:

Hand tighten the fitting screw(s). Then slightly rotate the conduit in the fitting. Where two screws are provided, they are to be alternately tightened until both are secure. The assembly shall then be visually inspected prior to applying the final torque to the screws to be certain the end of the conduit remains flush with the fitting's end stop (see Figure 2-6).

2.4.4 Tightening Torque

The designed performance of an FMC fitting is dependent on adequately torquing the fitting's securement means, screw or clamp. By nature of its design, the interlock construction of flexible metal conduit may be susceptible to collapse from overtorquing of the fitting's securement means. Performance typically will not be enhanced and may be reduced when excessive torque is applied. The experienced electrician often has come to rely on the "measured by feel" approach when securing these fittings. Performance tests in the product standards prescribe testing under specific assembly torque (e.g. average hand tightening of a No. 10 screw with a screwdriver is represented by 35 lb-in. (3.96 N-m) torque). Some fitting designs include a raised screw boss. (See Figure 2-1.) It is usually not necessary or intended that the screw be tightened to the point that its head be in contact with the boss. The screws on certain fitting designs, particularly larger trade sizes, may offer more than one tightening option including screwdriver (slot, Phillips, or Robertson-square drive) and bolt head for wrench application (hex or square). Greater mechanical advantage and torque can generally be achieved with a wrench. Where both screwdriver and wrench application options are offered, torque should be limited to that which can be applied by the screwdriver.

NEMA advocates the use of torque indicating tools for the assembly of FMC fittings. Care should be taken during fitting assembly not to puncture or deform the conduit, which may result in the presence of sharp edges in the wireway when wires are pulled. Table 2 provides a complete reference of standard assembly torque for FMC fittings. If a manufacturer prescribes a tightening torque other than that in the standard as a condition for listing, that recommended torque must be marked on installation instructions or the smallest unit shipping container in which the fitting is provided.

2.5 ATTACHMENT TO BOXES OR ENCLOSURES AND SUPPORT

2.5.1 Attachment to Unthreaded Entries

Where flexible metal conduit is used, electricians usually fasten the boxes into position on the framing members before attaching the raceway assembly. Conduit and fittings manufacturers caution installers to be sure to allow for sufficient length of conduit to enable complete seating of the conduit against the fittings end stop, so as to minimize undue stress on the conduit's interlocked convolutions and the conduit to fitting connection during attachment to a box. NEC® Section 300-18 [300-18] requires that a raceway be completely installed and supported before conductors are pulled into it.

Flexible Metal Conduit fittings supplied with locknuts for attachment to a box or enclosure may be assembled first to either the conduit or the box; attachment first to the conduit is the preferred method. A secure attachment can be made when the locknut is hand tightened and then further tightened 1/4 turn using an appropriate tool. When securing the locknut, care is to be taken to avoid excessive pressure where gripping the body of the fitting is necessary. Assemble fittings supplied without locknuts to the conduit and the box according to the manufacturer's installation instructions.

NOTE–Locknuts are not to be relied upon to penetrate nonconductive coatings on enclosures. Such coatings are to be removed in the locknut area prior to raceway assembly to assure a continuous ground path is achieved.

© Copyright 2003 by the National Electrical Manufacturers Association.

Copyright National Electrical Manufacturers Association
Provided by IHS under license with NEMA
No reproduction or networking permitted without license from IHS
Not for Resale

2.5.2 Attachment to Threaded Entries

FMC connectors having external threads may be installed into the threaded entries provided in certain boxes, enclosures, and conduit bodies. This does not include external threads of fittings intended for insertion inside of conduit. (See Figure 2-3.) The external threads of FMC fittings conforming to ANSI/NEMA FB 1 have straight threads (NPS). Threaded openings where these may be installed may have taper (NPT) or straight (NPS) threads, varying depth, and number of threads. Care must be taken to ensure that a minimum of 3 threads of the connector are fully engaged with the threads of the conduit entry when wrench tightened.

2.5.3 Support

Article 348 [350] of the *NEC*® requires securement of Flexible Metal Conduit at intervals not to exceed 1.4 m (4-1/2 ft.) and within 300 mm (12 in.) of each box (note exceptions). Securement in this manner assures a minimum of strain will be placed on the cable-to-fitting and fitting-to-box connection during assembly and throughout the lifetime of the installation. Flexible Metal Conduit shall be supported at least at the frequency required by the *NEC*®, using raceway supports intended for the purpose secured by hardware acceptable to the authority having jurisdiction.

A variety of straps, clamps, staples, and hangers are available that are specifically intended to secure FMC and similar raceways (see Figure 2-7). These supports shall be installed only on conduit of the trade size indicated on the support or its smallest unit shipping container. The variability of mounting surfaces, expected loads, and application environments will determine the appropriate support options and securement hardware. Design specifications usually calculate requirements based on maximum spacing intervals given in the NEC®. Closer support intervals than those required in the NEC® are an acceptable option to heavier supports and mounting hardware in some applications.

2.6 VERIFICATION OF INSTALLATION

Loosening of raceway components is sometimes encountered during the construction process. Once the raceway is fully installed and supported, and prior to wire pulling, all fittings and locknuts should be re-examined for secureness. After wire pulling, a final continuity test is to be performed at each connection over the entire length of the raceway as a final means of inspection for secureness of all joints.

© Copyright 2003 by the National Electrical Manufacturers Association.

Copyright National Electrical Manufacturers Association
Provided by IHS under license with NEMA
No reproduction or networking permitted without license from IHS
Not for Resale



FMC Squeeze Connector



FMC Single Screw Clamp Connector

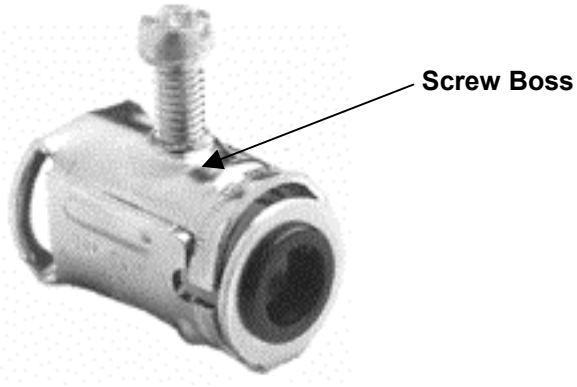

FMC Connector (Without Locknut)

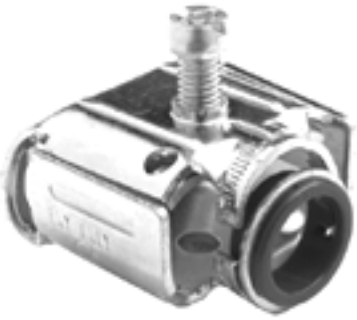

FMC Duplex Connector (Without Locknut)



Twin Screw 90° Angle Connector

Figure 2-1
TYPICAL DESIGNS OF FMC FITTINGS, CLAMP TYPE

© Copyright 2003 by the National Electrical Manufacturers Association.

Copyright National Electrical Manufacturers Association
Provided by IHS under license with NEMA
No reproduction or networking permitted without license from IHS
Not for Resale





Direct-Bearing Radial Screw Type

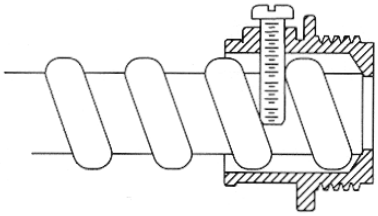

Tangential Screw Type

Figure 2-2
TYPICAL DESIGNS OF FMC FITTINGS, DIRECT-BEARING SCREW TYPE



FMC Screw-In Type Coupling



FMC Screw-In Type Connector

Figure 2-3
TYPICAL DESIGNS OF FMC FITTINGS, SCREW-IN TYPE

© Copyright 2003 by the National Electrical Manufacturers Association.

Copyright National Electrical Manufacturers Association
Provided by IHS under license with NEMA
No reproduction or networking permitted without license from IHS
Not for Resale

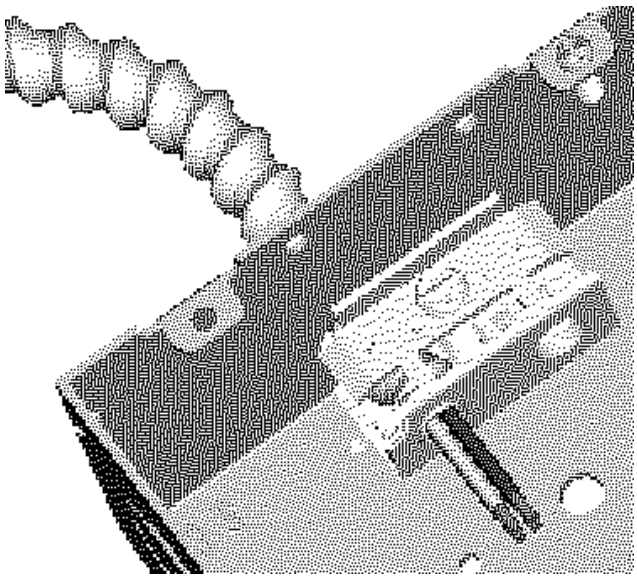

Figure 2-4
TYPICAL DESIGN OF INTEGRAL BOX CLAMP FOR FMC

© Copyright 2003 by the National Electrical Manufacturers Association.

Copyright National Electrical Manufacturers Association
Provided by IHS under license with NEMA
No reproduction or networking permitted without license from IHS
Not for Resale

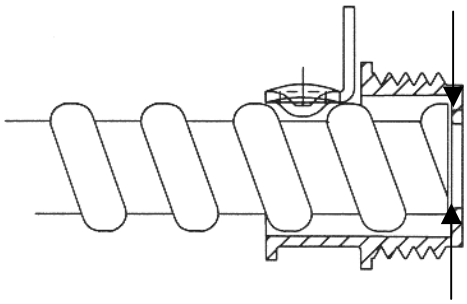

Correct Seating
(Cut end squared with pliers or hacksaw)

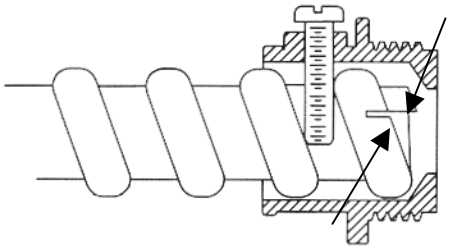

Incorrect Seating
(Cut end not properly squared)

Figure 2-5
CUT ENDS OF FLEXIBLE METAL CONDUIT

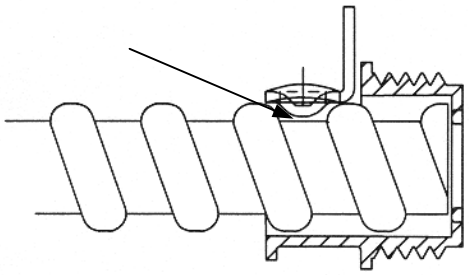

Correct Seating

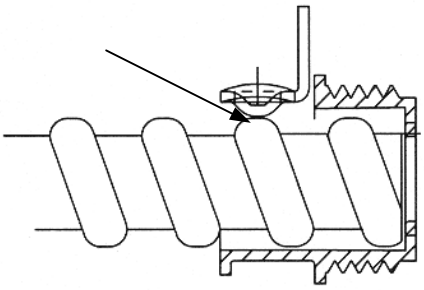

Incorrect Seating

Figure 2-6
FLEXIBLE METAL CONDUIT SECUREMENT CLAMP

© Copyright 2003 by the National Electrical Manufacturers Association.

Copyright National Electrical Manufacturers Association
Provided by IHS under license with NEMA
No reproduction or networking permitted without license from IHS
Not for Resale

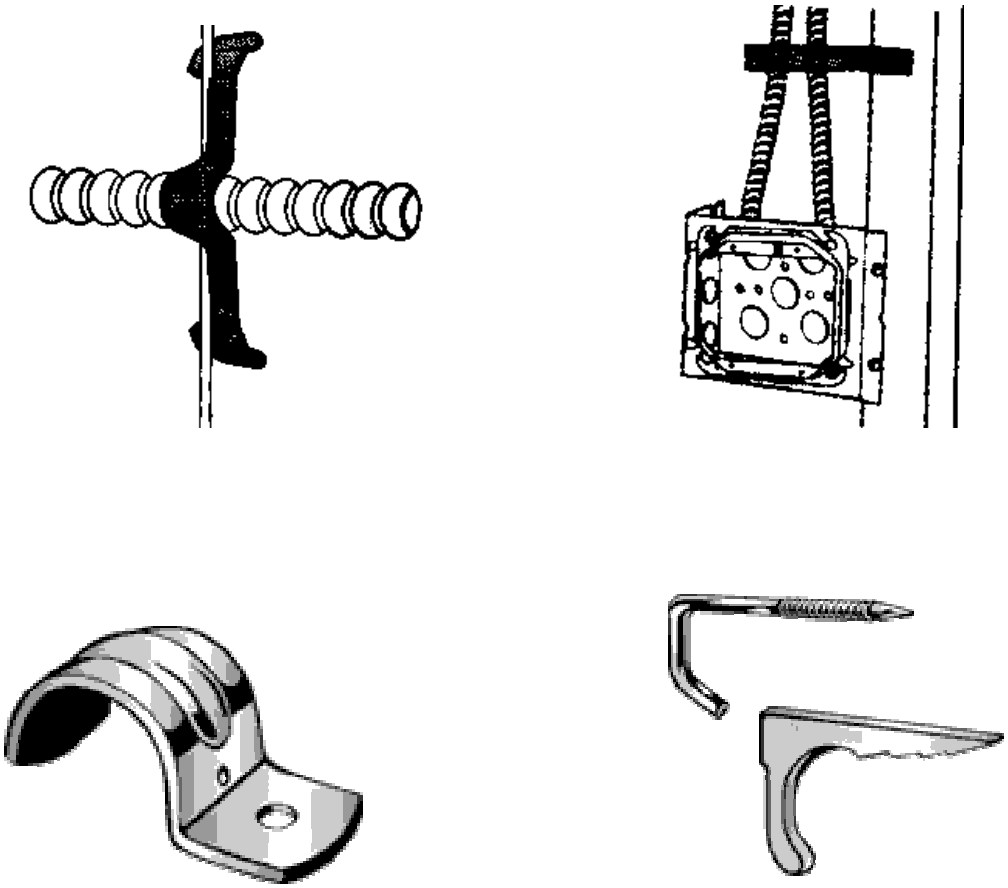

Figure 2-7
TYPICAL FLEXIBLE METAL CONDUIT SUPPORTS

© Copyright 2003 by the National Electrical Manufacturers Association.

Copyright National Electrical Manufacturers Association
Provided by IHS under license with NEMA
No reproduction or networking permitted without license from IHS
Not for Resale

Section 3
FITTINGS FOR USE WITH METAL-CLAD CABLE (TYPE MC)

Metal-Clad cable (Type MC) is permitted for use in both exposed and concealed work for virtually all types of electrical systems and for branch circuits and feeders, where not subject to physical damage. MC cable is permitted in wet locations when the features of the construction meet one or more of the conditions explained in Article 330 [334] of the *NEC*®. Fittings for use with this style of MC cable must also be "listed" as suitable for wet locations.

Section 250.118 [250-118] of the *NEC*® [Section 250-91 of the 1996 *NEC*®] permits the metallic sheath, or the combined metallic sheath and grounding conductors of Type MC cable, to serve as the equipment grounding conductor-to-ground metal boxes, enclosures etc. of the electrical system to a single grounding point. The metal sheathing, or the combination of the metal sheathing and grounding conductor along with "listed" fittings, work together as an equipment grounding means.

The requirements for listed Metal-Clad Cable can be found in ANSI/UL 1569, *Metal-Clad Cables.*

3.1 FITTING SELECTION

The *NEC*®, in Section 300.15 [300-15], requires that "Fittings and connectors shall be used only with the specific wiring methods for which they have been designed and listed." Further, Section 330.40 [334-12] requires "fittings used for connecting Type MC cable to boxes, cabinets, or other equipment shall be listed and identified for such use. Often, fittings that are listed for use with Metal-Clad cable are also listed for use with armored cable (Type AC) and, in some cases, Flexible Metal Conduit (FMC). The manufacturer's instructions, labels, and literature should be consulted to determine the specific wiring methods for which the fitting is intended and "listed." Refer to the "Required Marking" section for guidance in identifying the "listed" uses of such fittings.

There are four basic constructions of Metal-Clad cable for which fittings are available:

- **Interlocked Armor** MC (MCI)
- **Continuous Corrugated Sheath** MC (MCC)
- **Smooth** MC (MCS)
- **Flat or Rectangular** MC (FLAT)

MCI and MCC constructions are also available with a polymeric jacket covering the armor.

Trade references for MC cable most often pertain to the number and trade size of the conductors contained within. For example, 14/2 trade size indicates the cable contains two 14 AWG conductors. MC cable manufacturers provide nominal diameter over armor and over jacket dimensions in their sales literature. Typically, fittings suitable for use with Type MC Cable are selected based on the over armor dimension or a range of such dimensions.

When traditional trade sizes (e.g. 1/2 (16), 3/4 (21), etc.) are referred to in relation to MC cable fittings, the reference is to the nominal knockout diameter in a box or enclosure into which the fitting is intended to be mounted. Recently, metric designators were introduced which correspond to these traditional trade sizes. Table 1 cross-references traditional trade sizes to these metric designators.

Connectors for use with metal-clad cable in dry locations are available in a variety of materials such as fabricated steel, cast malleable iron, cast aluminum, and cast zinc. Selection of the material type of a fitting is a matter of design consideration or personal preference, as all "listed" fittings conform to the same minimum performance criteria. ANSI/UL 514B, *Conduit and Cable Fittings,* contains the requirements for listed MC cable fittings. ANSI/NEMA FB 1, *Fittings, Cast Metal Boxes, and Conduit Bodies for Conduit and Cable Assemblies,* contains manufacturing standards for MC cable fittings.

© Copyright 2003 by the National Electrical Manufacturers Association.

Copyright National Electrical Manufacturers Association
Provided by IHS under license with NEMA
No reproduction or networking permitted without license from IHS
Not for Resale

Three general categories describe the means by which MC Cable fittings attach to the cable to assure a sound mechanical and electrical connection: *"Clamp-type"* connectors (Figure 3-1), connectors with *direct bearing (tangential type) screws* (Figure 3-2), and "*Compression (Gland) type*" connectors (Figure 3-3). *"Duplex"* connectors are available which enable one or two MC cables to be connected to a single knockout in an enclosure. All connectors employ a locknut or an integral feature as a means for securement and bonding to an enclosure. Outlet and switch boxes are also provided with *integral clamps* (Figure 3-4) that are intended for use with Metal-Clad Cable.

3.1.1 Environmental Considerations

MC cable connectors for jacketed MC cable may also have several design variations. In addition to providing a sound mechanical and electrical connection, certain fittings listed for use with specific jacketed MC cable designs also provide degrees of environmental protection in wet locations or poured concrete. These connectors typically employ a "gland" feature, which encircles the cable to help seal the connection and serves to bond the cable's armor sheathing.

3.2 REQUIRED MARKING

The UL 514B marking requirements provide the installer and the electrical inspector with basic information as to the specific wiring methods for which the fitting has been found acceptable, and "listed." The following summarizes markings for fittings listed for use with Metal-Clad cable.

3.2.1 Cable Range

The fitting manufacturer must supply the range of diameters (diameter over armor) for which the fitting is suitable. The fitting must also be supplied with the "listing" information as it pertains to the construction style of the Metal-Clad cable. Lastly, the manufacturer must supply information pertaining to the environmental listing status.

Example: METAL-CLAD CABLE CONNECTOR
0.473-0.764 DIA. (MCI) or (MCC)
DRY LOC

EXPLANATION—Acceptable for use with steel or aluminum interlocked armor-sheathed (MCI) or Continuous Corrugated (MCC) Metal-Clad Cable with a range of diameter over armor of 0.473 to 0.764 inches; For use in dry locations only.

Example: METAL-CLAD CABLE CONNECTOR
0.573-0.725 DIA. (MCI)
WET LOC

Explanation—Acceptable for use with steel or aluminum interlocked armor-sheathed (MCI) Metal-Clad Cable with a range of diameter over armor of 0.573 to 0.725 inches; For use in wet locations.

The following abbreviations, representing the type of cable, may be used in marking:

- MCI for cable with interlocking armor
- MCS for continuous smooth sheath cable
- MCC for continuous corrugated sheath cable
- FLAT for flat or rectangular cable

Metal-clad cable fittings, especially in the smaller trade sizes, may not be practically marked to conform to the requirements for permanence and legibility. In such cases, these markings are permitted on the product's smallest unit shipping container or installation instructions. The DRY LOC marking must however be permanently marked on the fitting.

© Copyright 2003 by the National Electrical Manufacturers Association.

Copyright National Electrical Manufacturers Association
Provided by IHS under license with NEMA
No reproduction or networking permitted without license from IHS
Not for Resale

Clamps or connectors furnished as part of an outlet box in accordance with UL 514A and UL514C are marked, on the clamp or connector, to indicate the application for which it is intended.

Example:

- MCI for metal-clad interlocking armor cable (steel or aluminum)
- MCS for metal-clad continuous smooth sheath cable
- MCC for metal-clad continuous corrugated sheath cable

3.3 GROUNDING

As previously stated, *NEC*® Article 250 [250] permits the metallic sheath or the combined metallic sheath and grounding conductors of Type MC cable to serve as the equipment grounding conductor to ground metal boxes, enclosures etc. of the electrical system to a single grounding point. Until February 1, 1996, listed fittings and box clamps were automatically assumed acceptable for equipment grounding in conjunction with listed Metal-Clad Cable. Since then, all listed fittings for use with metal-clad cable of the Continuous Corrugated (MCC) or Smooth sheath (MCS) types have been required to pass a "current test" simulating ground fault conditions. UL has indicated in their test evaluation guidelines that Metal-Clad Cable connectors for use with MC cable of the Interlocked armor type (MCI) do not warrant this additional evaluation due to the presence of a separate equipment grounding conductor required in listed MCI type cable. This qualification provides further assurance in the systems ability to perform under fault current conditions.

3.4 CABLE PREPARATION AND FITTING ASSEMBLY TECHNIQUE

Performance test methods for MC cable fittings are designed to recognize the variability inherent in field applications. The most efficient assembly of a Metal-Clad Cable and fitting system can be achieved, and optimum performance ensured, by adherence to a few simple cable preparation and assembly techniques:

- Square the end of the metal jacket.
- Insert cable so that it is flush with the fitting's end stop.
- Ensure seating of clamp on armor jacket before torquing.
- Take care when torquing the fitting's securement screw.

In addition, when installing a fitting suitable for jacketed metal-clad cable and listed as suitable for wet locations:

- Strip the polymeric jacket to the length stated in the manufacturer's assembly instructions, if provided.
- Remove oils or solvent by-products from the outer jacket of the cable.
- Ensure seating of clamp on armor jacket before torquing.
- Torque the fitting's gland nut to manufacturer's specifications.

For cable preparation always follow the manufacturer's instructions.

The mechanical and electrical performance of a fitting for Metal-Clad Cable is dependent on an adequate, secure, and clean bearing surface for the fitting's securement screw or clamp. Most experienced electricians recognize that Metal-Clad Cable of the interlocking armor type (MCI) is different on each end. Since the interlocked armor is wound in one direction, the convolutions on one end sometimes has a tendency to open when a fitting is tightened while the other end tends to remain more closed. Metal-Clad Cable fittings are designed to assemble to either end of the cable.

3.4.1 Stripping Armor

Specialized tools are available and widely used for stripping the armor sheath from MC cable (MCI). These tools are efficient and effective in safely removing the necessary armor to expose the conductors necessary

© Copyright 2003 by the National Electrical Manufacturers Association.

Copyright National Electrical Manufacturers Association
Provided by IHS under license with NEMA
No reproduction or networking permitted without license from IHS Not for Resale

for making connections. Unfortunately, their use always results in a sharp angle cut on the end of the sheathing and often cuts partially through the next remaining full convulsion of the armor. Whether or not one of these specialized tools is used, the best and most effective fitting assembly is ensured when the armor sheath is squared by carefully cutting off the angled edge and any damaged convulsions with a pair of diagonal pliers, a hack saw, or the like. If this important step is not taken, complete seating of the cable into the fitting, and a secure bearing surface for the securement screw, clamp, or bonding means cannot be assured (see Figure 3-5). Take care not to cut or scar the insulation on individual conductors when stripping the armor sheath.

3.4.2 Inserting Cable

Product standards call for Metal-Clad Cable fittings to have a smooth end stop that will not allow the cable assembly to pull through. When assembling a connector, be certain that the cable is completely inserted in the fitting and is flush against the end stop. This ensures that the cable is secure, the sharp cut end of the armor sheath is bushed, and that the armor on interlocking-type armor MC will not open under pressure when torquing the securement screw. The diameter of the end stop in a listed Metal Clad Cable fitting is not restricted to a specific range. It must, however, be of a size that will prohibit the cable armor sheath from being pulled through. Combination fittings listed for 3/8 (12) flexible metal conduit in addition to metal clad cable may have a smaller end stop diameter than a similar fitting specifically listed for metal clad cable. This can cause difficulty in feeding the conductors of larger sizes of metal clad cable within the fitting's acceptable range. Selection of the proper fitting to match the trade size of the cable cannot be overemphasized.

3.4.3 Seating a Securement Clamp

Where a fitting intended for use with Type MCI and MCC cable employs a clamp as the means to secure the cable, proper seating of the clamp to the cable's metal jacket is to be assured. Using the following method, the fitting's clamp will seat between the convolutions of the cable:

Hand tighten the fitting screw(s). Then slightly rotate the cable in the fitting. Where two screws are provided, they are to be alternately tightened until both are secure. The assembly shall then be visually inspected prior to applying the final torque to the screws to be certain the metal jacket at the end of the cable remains flush with the fitting's end stop (see Figure 3-6).

3.4.4 Tightening Torque

The designed performance of an MC cable fitting is dependent on adequately torquing the fitting's securement means, screw, clamp, or gland nut. By nature of its design, the interlocked construction of interlocking armor type metal-clad cable (MCI) can be susceptible to collapse from overtorquing of the fitting's securement means. The experienced electrician has typically relied on the "measured by feel" approach over the years. Performance will not typically be enhanced and may even be reduced when excessive torque is applied. Performance tests in the product standards for MC cable fittings prescribe testing under specific assembly torque (e.g. average hand tightening of a No. 10 screw with a screwdriver is represented by 35 lb-in (3.96 N-m). Some fitting designs include a raised screw boss. (See Figure 3-1.) It is usually not necessary or intended that the screw be tightened to the point that its head be in contact with the boss. The screws on certain fitting designs, particularly larger trade sizes, may offer more than one tightening option, including screwdriver (slot, Phillips, or Robertson-square drive) and bolt head for wrench application (hex or square). Greater mechanical advantage and torque can generally be achieved with a wrench. Where both screwdriver and wrench application options are offered, torque should be limited to that which can be applied by the screwdriver.

Fittings employing a "gland" design are intended to be wrench tightened. When the appropriate torque is applied, the gland is uniformly compressed and secured to the cable. Typically, most compression gland nuts achieve maximum securement after 1 to 2 turns past the hand-tightened torque.

© Copyright 2003 by the National Electrical Manufacturers Association.

Copyright National Electrical Manufacturers Association
Provided by IHS under license with NEMA
No reproduction or networking permitted without license from IHS
Not for Resale

NEMA advocates the use of torque indicating tools for the assembly of MC cable fittings. Care should be taken during the assembly of fittings not to puncture or deform the cable's armor, which may result in the presence of sharp edges in the wireway. Table 2 provides a complete reference of standard assembly torque for MC cable fittings. If a manufacturer prescribes a tightening torque other than that in the standard as a condition of listing, that recommended torque value must be marked on the installation instructions or the smallest unit shipping container in which the fitting is provided.

3.5 ATTACHMENT TO BOXES OR ENCLOSURES AND SUPPORT

3.5.1 Attachment to Unthreaded Entries

Where Metal-Clad Cable is used, electricians usually fasten the boxes into position on the framing members before attaching the raceway assembly. MC Cable and fittings manufacturers caution installers to be sure to allow for sufficient length of cable to enable sufficient armor to be removed, to expose the prescribed length of conductor and complete seating of the armor against the fitting's end stop. This will minimize stress on the cable's interlocked armor (MCI) or the cable to fitting connection during attachment to a box.

Metal clad cable fittings supplied with locknuts for attachment to a box or enclosure may be assembled first to either the cable or the box; attachment first to the cable is the preferred method. A secure attachment to a box or enclosure can be made when the locknut is hand tightened and then further tightened 1/4 turn using an appropriate tool. When securing the locknut, care is to be taken to avoid excessive pressure where gripping the body of the fitting is necessary. Assemble fittings supplied without locknuts to the cable and the box according to the manufacturer's installation instructions.

NOTE–Locknuts are not to be relied upon to penetrate nonconductive coatings on enclosures. Such coatings are to be removed in the locknut area prior to raceway assembly to assure a continuous ground path is achieved.

3.5.2 Attachment to Threaded Entries

Metal-Clad Cable connectors having external threads may be installed into the threaded entries provided in certain boxes, enclosures and conduit bodies. The external threads of MC Cable fittings conforming to ANSI/NEMA FB 1 have straight threads (NPS). Threaded openings where these fittings may be installed may have taper (NPT) or straight (NPS) threads, varying depth, and number of threads. Care must be taken to ensure that a minimum of 3 threads of the connector are fully engaged with the threads of the conduit entry when wrench tightened.

3.5.3 Supports

NEC® Article 330 [334] requires Metal Clad Cable to be secured at intervals not to exceed 1.8 m (6 ft.). For cables containing 10 AWG and smaller conductors, connection within 300 mm (12 in.) of each box is required (note exceptions in Article 330 [334]). Securement in this manner prior to assembly to a box or enclosure assures a minimum of strain will be placed on the cable to fitting and fitting to box connection during assembly and throughout the lifetime of the installation. Metal-Clad Cable shall be supported at least at the frequency required by the *NEC*®, using raceway supports intended for the purpose, and mounted by hardware acceptable to the authority having jurisdiction.

A variety of straps, clamps, staples, and hangers are available which are specifically intended to secure Metal-Clad Cable and similar raceways (see Figure 3-7). These supports shall be installed only on cable of the trade size indicated on the support or its smallest unit shipping container. The variability of mounting surfaces, expected loads, and application environments will determine the appropriate support options and mounting hardware. Design specifications usually calculate requirements based on maximum spacing intervals given in the *NEC*®. Closer support intervals than are required in the *NEC*® are an acceptable option to heavier supports and mounting hardware in some applications.

Metal clad cable fittings and typical support hardware are not designed to perform the function of conductor support in long vertical installations of large size cable (NEC 300.19 [300-19]). Often, bends are designed in

© Copyright 2003 by the National Electrical Manufacturers Association.

Copyright National Electrical Manufacturers Association
Provided by IHS under license with NEMA
No reproduction or networking permitted without license from IHS Not for Resale

such long vertical runs to relieve the strain on the conductor terminations. Consult with the MC cable manufacturer for alternative solutions.

3.6 VERIFICATION OF INSTALLATION

Loosening of raceway components is sometimes encountered during the construction process. Once the raceway is fully installed and supported, all fittings and locknuts should be re-examined for secureness. A continuity test is to be performed at each connection over the entire length of the raceway as a final means of inspection for secureness of all joints.

--`,,`,,`-`-`,,`,,`,`,,`---

© Copyright 2003 by the National Electrical Manufacturers Association.

Copyright National Electrical Manufacturers Association
Provided by IHS under license with NEMA
No reproduction or networking permitted without license from IHS

Not for Resale

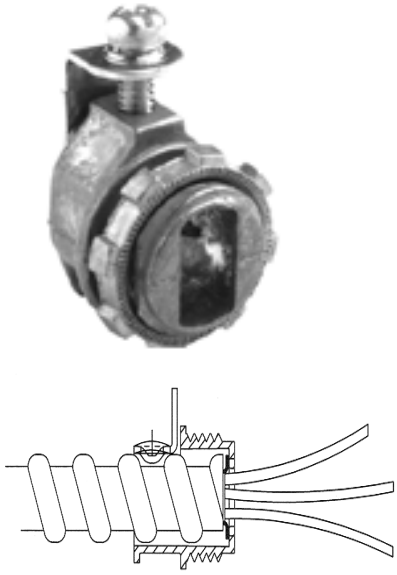

MC Single Screw Clamp Connector



MC Squeeze Connector

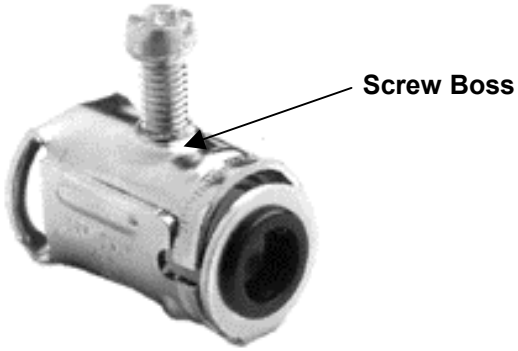

MC Connector (Without Locknut)



MC Duplex Connector (Without Locknut)



Twin Screw 90º Angle Connector

Figure 3-1
TYPICAL DESIGNS OF MC FITTINGS, CLAMP TYPE

© Copyright 2003 by the National Electrical Manufacturers Association.

Copyright National Electrical Manufacturers Association
Provided by IHS under license with NEMA
No reproduction or networking permitted without license from IHS
Not for Resale

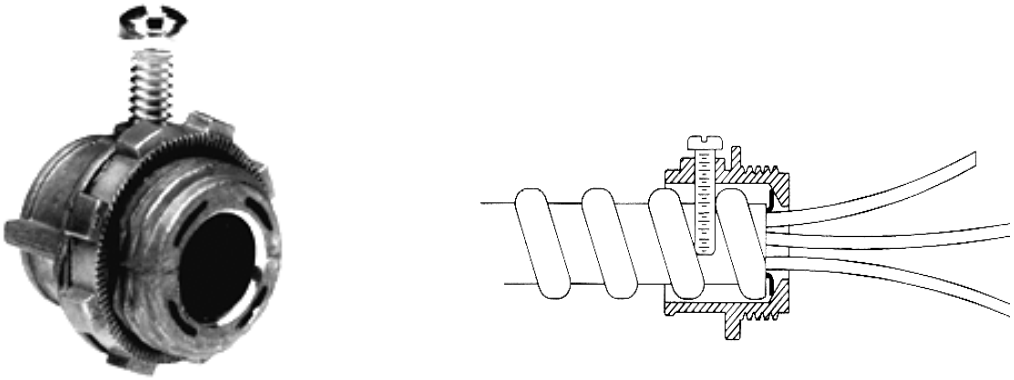

Figure 3-2
TYPICAL DESIGN OF MC FITTINGS, DIRECT BEARING TANGENTIAL SCREW TYPE

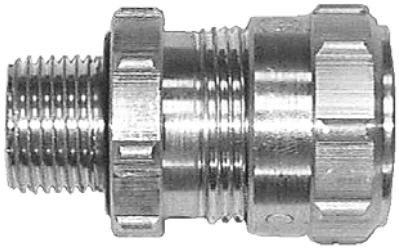

Figure 3-3
TYPICAL DESIGN OF MC FITTINGS, COMPRESSION GLAND TYPE

--`,,`-`-`,,`,,`,`,,`---

© Copyright 2003 by the National Electrical Manufacturers Association.

Copyright National Electrical Manufacturers Association
Provided by IHS under license with NEMA
No reproduction or networking permitted without license from IHS

Not for Resale

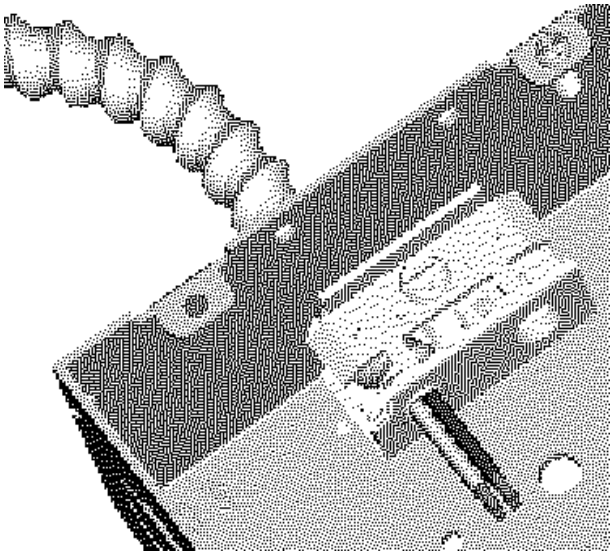

Figure 3-4
TYPICAL DESIGN OF INTEGRAL BOX CLAMP FOR MC

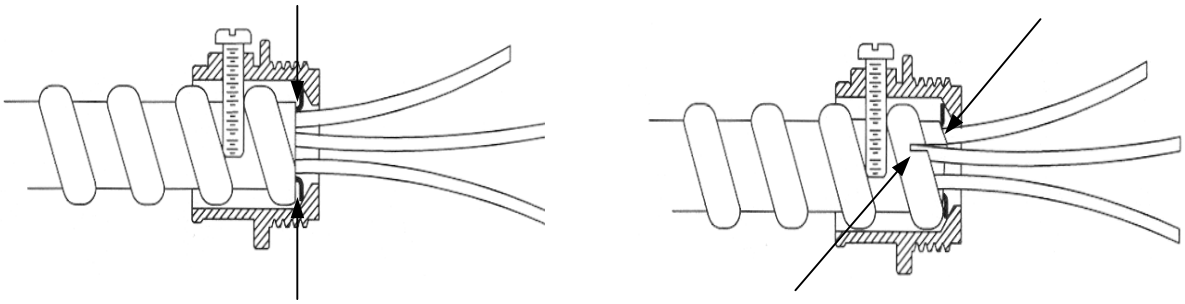

Correct Seating
(Cut end squared with pliers or hacksaw)

Incorrect Seating
(Cut end not properly squared)

Figure 3-5
CUT ENDS OF METAL-CLAD CABLE

© Copyright 2003 by the National Electrical Manufacturers Association.

Copyright National Electrical Manufacturers Association
Provided by IHS under license with NEMA
No reproduction or networking permitted without license from IHS
Not for Resale

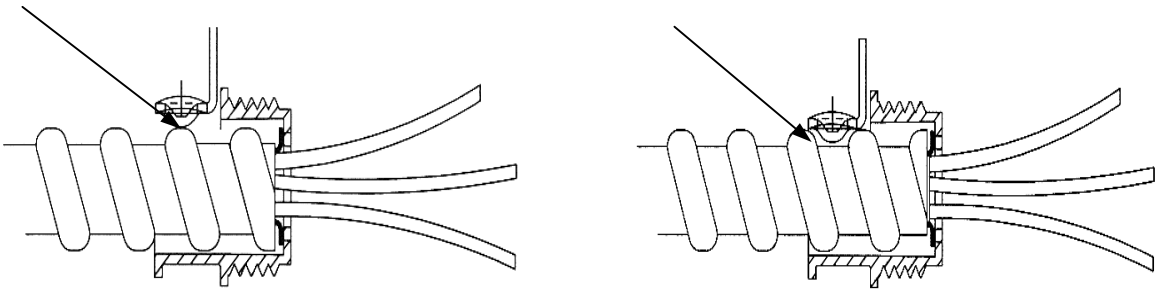

Incorrect Seating **Correct Seating**

Figure 3-6
METAL-CLAD CABLE SECUREMENT CLAMP

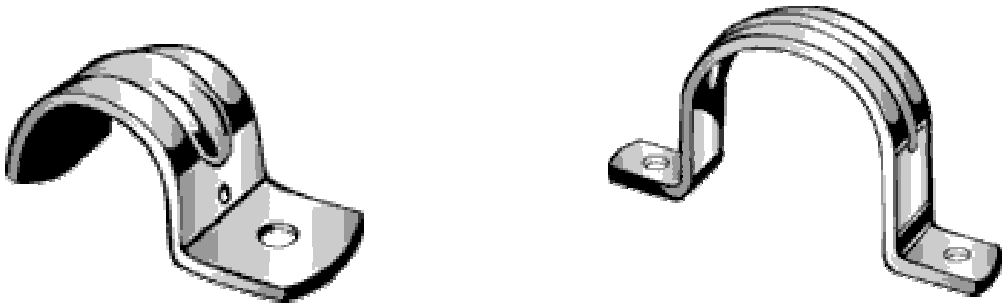

Figure 3-7
TYPICAL METAL-CLAD CABLE SUPPORTS

© Copyright 2003 by the National Electrical Manufacturers Association.

Copyright National Electrical Manufacturers Association
Provided by IHS under license with NEMA
No reproduction or networking permitted without license from IHS
Not for Resale

Section 4
LIQUIDTIGHT FLEXIBLE METAL CONDUIT (LFMC)

Liquidtight Flexible Metal Conduit is permitted for use in both exposed and concealed work for electrical systems that require flexibility and protection for conductors from vapors, liquids, or solids. Liquidtight Flexible Metal Conduit is permitted for use outdoors exposed, in concrete or masonry, and for direct burial in earth when listed and marked "for direct burial." For a detailed description of the uses permitted and not permitted, refer to the National Electrical Code® (*NEC*®) Article 350 [351].

NEC® Article 250 [250] permits Liquidtight Flexible Metal Conduit to serve as the equipment grounding conductor to ground metal boxes, enclosures, etc. of the electrical system to a single grounding point.

The requirements for listed Liquidtight Flexible Metal Conduit are found in UL 360, *Liquidtight Flexible Steel Conduit.*

4.1 FITTING SELECTION

Section 300.15 [300-15] of the *NEC*® requires that "fittings and connectors shall be used only with the specific wiring methods for which they are designed and listed." Section 350.6 and 350.42 [351-7] states, "Liquidtight Flexible Metal Conduit shall be used only with approved terminal fittings. Angle connectors shall not be used for concealed raceway installations." Often fittings that are "listed" for use with Liquidtight Flexible Metal Conduit are also listed for use with "Type LFNC-B" Liquidtight Flexible Nonmetallic Conduit. These fittings are required to be marked "LFNC-B" or equivalent. Guidelines for their intended application on this raceway system can be found in Section 5*, Fittings for Use with Liquidtight Flexible Nonmetallic Conduit (LFNC)*. The manufacturer's instructions, labels, and literature should be consulted to determine the specific wiring methods for which the fitting is intended and "listed." Refer to the "Required Marking" section for guidance in identifying the "listed" uses of such fittings.

Liquidtight Flexible Metal Conduit fittings are available in various designs. All can generally be categorized as *"compression gland"* type. These fittings all serve the common purpose of preventing the ingress of liquids into the raceway and enclosure system. They are also relied upon to provide for the continuous electrical continuity of the raceway system and offer mechanical protection for the conductors entering an enclosure. Fittings are available in both straight and angle (45 and 90 degree) designs. See Figure 4-1 for typical designs.

Fittings supplied with locknuts are for the purpose of providing a seal at an enclosure knockout or fitting joint. A sealing ring or other device may be supplied or recommended as a provision of the fitting's "Liquidtight" listing. These fittings may also provide a Liquidtight joint when installed into a threaded entry of an enclosure. When utilized in this way, the sealing device and locknuts are not used. Liquidtight Flexible Metal Conduit fittings supplied without locknuts are generally intended only for use in threaded entries of enclosures. Fittings without locknuts may also be installed in unthreaded entries when an appropriate size listed locknut is used as part of the assembly. A sealing ring or other device may also be necessary for such Liquidtight applications. Again, the manufacturer's instructions, labels, and literature should be consulted to determine the specific applications for which the fitting is intended and "listed."

Liquidtight Flexible Metal Conduit connectors are also offered with an optional "insulated throat." The fitting's throat is not required to be insulated but some installers prefer the increased conductor protection provided by this design option. Insulating throats also provide the required protection against physical damage for 4 AWG and larger ungrounded conductors.

Liquidtight Flexible Metal Conduit and fittings may also be suitable for use in certain adverse environments along with appropriate enclosures. The specific requirements for "Type Rated" enclosures and fittings to be used in these applications are found in ANSI/NEMA 250, *Enclosures for Electrical Equipment (1000 Volts maximum),* and ANSI/UL 50, *Standard for Enclosures for Electrical Equipment.*

© Copyright 2003 by the National Electrical Manufacturers Association.

Copyright National Electrical Manufacturers Association
Provided by IHS under license with NEMA
No reproduction or networking permitted without license from IHS
Not for Resale

LFMC fittings are referred to by the trade size of the Liquidtight Flexible Metal Conduit for which they are designed, typically 3/8 (12) through 4 (103). Recently, metric designators have been introduced that correspond to these traditional trade sizes. Table 1 provides a cross-reference of traditional trade sizes to these metric designators.

4.1.1 Environmental Considerations

Fittings for use in wet locations must be suitable for the purpose. Listed “Liquidtight” fittings have been found suitable for use in wet locations as described in the *NEC®*. However, important additional considerations are necessary in making the right conduit and fitting selection.

Importantly, fittings marked “raintight” or "wet locations" are not automatically considered “Liquidtight.” Listed “wet locations” fittings are tested under conditions simulating typical wet locations such as exposure to pouring rain, thus the “wet locations” marking, while “Liquidtight” fittings are intended also for use in “wet” industrial environments, which may contain machine oils and coolants. The test conditions for listed “Liquidtight” fittings include an oil and water spray to simulate these harsh environments.

In its definition of "wet locations," the NEC® includes "locations subject to saturation with water or other liquids, such as vehicle washing areas, and locations exposed to weather and unprotected." These are acceptable locations for "Liquidtight" fittings. However, the definition for wet locations also includes “installations underground or in concrete slabs or masonry in direct contact with the earth... "A fitting intended for these applications shall be marked “wet locations” in addition to "Liquidtight."

“Liquidtight” or “wet location” fitting designs may require a separate sealing ring to be installed outside a box or enclosure to ensure a sealed interface between the body of the fitting and the box. See “Required Marking” section.

Listed “Liquidtight” fittings are not intended for occasional temporary or prolonged submersion in any liquid. Fittings that may be subjected to occasional submersion in liquid in normal use must have a NEMA 6 or 6P Type rating.

4.2 REQUIRED MARKING

Required marking on “listed” Liquidtight Flexible Metal Conduit fittings, or their smallest unit shipping container, provides the installer and the electrical inspector with basic information as to the “specific wiring methods” for which the fitting has been found acceptable. The following is a summary of those markings for fittings listed for use with Liquidtight Flexible Metal Conduit.

Application	Marking	Intended Use
Liquidtight applications	Liquidtight	—
Wet locations	Raintight or [(a)] Wet locations	—
Wet locations (where required)	[(b)] between box and fitting	Wet locations only when the specified gasket or sealing ring is installed between the fitting and the box

[(a)] Recommendation for future design.
[(b)] specific identification of the component to be used.

© Copyright 2003 by the National Electrical Manufacturers Association.

Copyright National Electrical Manufacturers Association
Provided by IHS under license with NEMA
No reproduction or networking permitted without license from IHS
Not for Resale

The designations "**FNMC-B**" or **"LFNC-B"**[1] on the Liquidtight Flexible Metal Conduit fitting indicate that it is also suitable and listed for use with Type-B Liquidtight Flexible Nonmetallic Conduit.

[1] Recommendation for future design

A Liquidtight Flexible Metal Conduit fitting, or the smallest unit shipping carton in which it is packaged may also be marked with a type number; for example, "Type 3, 3S, 4, 4X...," indicating the external conditions and degrees of ingress protection for which it is acceptable. See ANSI/NEMA 250, *Enclosures for Electrical Equipment (1000 Volts maximum),* and ANSI/UL 50, *Standard for Enclosures for Electrical Equipment,* for details and requirements for these and other type ratings. A fitting that complies with the requirements for more than one type may have multiple designations.

A Liquidtight Flexible Metal Conduit fitting, or the smallest unit shipping carton in which it is packaged, may also be marked "WET LOCATIONS," indicating Liquidtight fittings that have also been evaluated for direct burial applications, including in concrete or masonry, as defined by the *NEC*®.

A Liquidtight Flexible Metal Conduit fitting supplied without a locknut shall be marked:

For securement to a threaded hub only

Exception—A fitting supplied without a locknut but intended for use within either a threaded or unthreaded opening may have the alternative marking:

For use only with listed locknuts or securement to a threaded hub

Listed fittings in the 1-1/2 (41) or larger trade sizes which have met the requirements of the current test in UL 514B may be marked "GRND" on the fitting providing the words "Grounding Type" also appear on the smallest unit shipping carton. This marking indicates the fitting when installed as intended provides a suitable bond between the conduit and a metallic enclosure to which it is assembled.

4.3 GROUNDING

Liquidtight Flexible Metal Conduit is permitted as a grounding means as described in *NEC*® Section 350.60 [351-9]. Listed fittings for use with Liquidtight Flexible Metal Conduit in trade sizes 3/8 (12) through 1-1/4 (35) are considered "Grounding Type" having passed the UL 514B Current Test as a provision for listing. Until February 1, 1996, listed LFMC fittings in these trade sizes were automatically assumed acceptable for equipment grounding in conjunction with listed LFMC. Since then however, all "listed" fittings for use with LFMC have been required to pass the "current test" simulating ground fault conditions. This qualification provides further assurance in the system's ability to perform under fault current conditions. No marking is required. Trade sizes larger than 1-1/4 (35) optionally, may be marked "GRND" as described in the "Required Marking" section above.

Wherever fittings are not of the "grounding type," grounding and bonding bushings, locknuts, wedges, or other fittings listed for this purpose are to be used.

4.4 CONDUIT PREPARATION AND FITTING ASSEMBLY TECHNIQUE

Performance test methods for LFMC fittings are designed to recognize the variability inherent in field applications. The most efficient assembly of a Liquidtight Flexible Metal Conduit and fitting system can be achieved, and optimum performance ensured, by adherence to a few simple conduit preparation and assembly techniques:

- Square the end of the conduit.
- Fully insert the conduit flush with the fitting's end stop.
- Ensure jacketing over conduit is not cut or ripped in any location.

© Copyright 2003 by the National Electrical Manufacturers Association.

Copyright National Electrical Manufacturers Association
Provided by IHS under license with NEMA
No reproduction or networking permitted without license from IHS Not for Resale

For conduit preparation, always follow the conduit manufacturer's instructions.

Start the assembly of the fitting to the Liquidtight conduit by cutting the end of the conduit squarely using a hacksaw or similar tool. Liquidtight conduit manufacturers sometime offer cutting jigs specifically for this purpose. A hack saw blade should have 24-32 teeth per inch. A power band saw, when used, should be set at a speed no greater than 400 feet/minute. The squared end of the conduit must be fully inserted onto the ferrule component of the fitting. (See Figure 4-1.) If the conduit is not cut squarely, complete seating of the conduit to the end of the ferrule cannot be assured. It is also important that the ferrule is inserted (screwed) all the way into the conduit to ensure proper seating of the sealing ring.

The remaining fitting components then must be securely assembled to the conduit. A compression gland nut, when supplied as part of a fitting, will typically achieve maximum securement when tightened to the assembly torque specified in Table 3 with an appropriate tool or in accordance with the manufacturer's instructions.

To assure the integrity of the Liquidtight system, the full length of the conduit should be examined for cuts or tears at the time of installation.

4.5 ATTACHMENT TO BOXES OR ENCLOSURES AND SUPPORT

Assembly methods for LFMC fittings vary. Follow the manufacturer's directions closely.

4.5.1 Attachment to Unthreaded Entries

For installations where Liquidtight Flexible Metal Conduit is used, the electrician usually fastens the box or enclosure into position before attaching the conduit assembly. When the fitting and conduit assembly is to be attached to an unthreaded opening in a box or enclosure using a locknut, first attach the threaded body of the fittings to the box or enclosure and secure the locknut hand-tight. Then assemble the ferrule and gland nut onto the end of the conduit. After securely tightening the gland nut to the threaded body of the fittings, finish tightening the locknut.

A secure attachment to a box or enclosure can be made when the locknut is hand tightened and then further tightened 1/4 turn using an appropriate tool. When securing the locknut, care is to be taken to avoid excessive pressure where gripping the body of the fitting is necessary.

NOTE–Locknuts are not to be relied upon to penetrate nonconductive coatings on enclosures. Such coatings are to be removed in the locknut area prior to raceway assembly to assure a continuous ground path is achieved.

4.5.2 Attachment to Threaded Entries

LFMC fittings may be installed into the threaded entries provided in certain boxes, enclosures, and conduit bodies. Threaded openings may have either taper (NPT) or straight (NPS) threads, varying depth, and number of threads. Care should be taken to ensure that the threaded entry will accommodate a minimum of 3 engaged threads of the connector.

When assembling the fitting into a threaded enclosure, the body of the fitting is typically disassembled from the gland nut then threaded and wrench tightened into the enclosure entry. Teflon tape or lubricants should never be used on the threaded joint surfaces (unless specifically stated in the manufacturer's instructions). Doing so may result in a high impedance connection, which may interfere with the electrical ground continuity of the joint. After proper assembly of the fitting body to the enclosure, the remaining components of the assembly should then be joined to the conduit and then to the fitting's body following the manufacturer's supplied instructions.

Conduit and fittings manufacturers caution installers to be sure to allow for sufficient length of conduit to enable complete seating of the conduit into the fitting's ferrule and so as not to put undue stress on the conduit-to-fitting connection during attachment to the box or enclosure.

© Copyright 2003 by the National Electrical Manufacturers Association.

Copyright National Electrical Manufacturers Association
Provided by IHS under license with NEMA
No reproduction or networking permitted without license from IHS
Not for Resale

4.5.3 Support

The *NEC*, in Article 350 [351], requires Liquidtight Flexible Metal Conduit to be secured at intervals not to exceed 1.4 m (4-1/2 ft.) and within 300 mm (12 in.) of each box (note exceptions). Support in this manner ensures a minimum strain will be placed on the conduit to fitting and fitting to box connection during assembly and throughout the lifetime of the installation. Liquidtight Flexible Metal Conduit shall be supported at least at the frequency required by the NEC® using raceway supports intended for the purpose, and mounted by hardware acceptable to the authority having jurisdiction.

A variety of straps, clamps, and hangers are available which are specifically intended to secure Liquidtight Flexible Metal Conduit and similar raceways (see Figure 4-2). These supports shall be installed only on conduit of the trade size indicated on the support or its smallest unit shipping container. The variability of mounting surfaces, expected loads, and application environments will determine the appropriate support options and mounting hardware. Design specifications usually calculate requirements based on maximum spacing intervals given in the NEC®. Closer support intervals than are required in the NEC® are an acceptable option to heavier supports and mounting hardware in some applications.

4.6 VERIFICATION OF INSTALLATION

Loosening of raceway components is sometimes encountered during the construction process. Once the raceway is fully installed and supported, all fittings and locknuts should be re-examined for tightness. A continuity test is performed over the entire length of the raceway as a final means of inspection of all joints.

© Copyright 2003 by the National Electrical Manufacturers Association.

Copyright National Electrical Manufacturers Association
Provided by IHS under license with NEMA
No reproduction or networking permitted without license from IHS
Not for Resale



Straight LFMC Connector



45° LFMC Connector



90° LFMC Connector



90° LFMC Connector with Integral Grounding Lug

Figure 4-1
TYPICAL DESIGNS OF LIQUIDTIGHT FLEXIBLE METAL CONDUIT FITTINGS

© Copyright 2003 by the National Electrical Manufacturers Association.

Copyright National Electrical Manufacturers Association
Provided by IHS under license with NEMA
No reproduction or networking permitted without license from IHS
Not for Resale

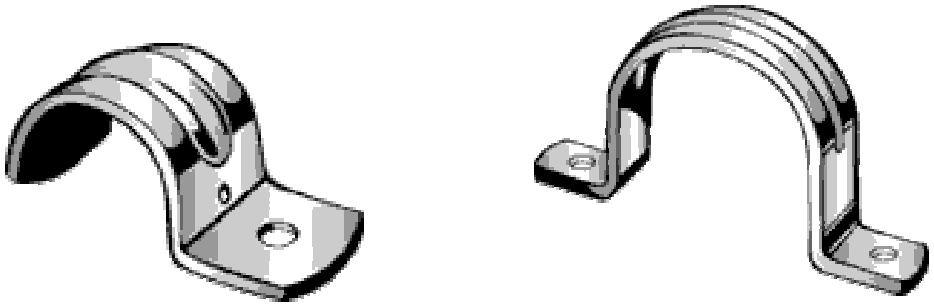

Figure 4-2
TYPICAL LIQUIDTIGHT FLEXIBLE METAL CONDUIT SUPPORTS

© Copyright 2003 by the National Electrical Manufacturers Association.

Copyright National Electrical Manufacturers Association
Provided by IHS under license with NEMA
No reproduction or networking permitted without license from IHS
Not for Resale

Section 5
FITTINGS FOR USE WITH LIQUIDTIGHT FLEXIBLE NONMETALLIC CONDUIT (LFNC)

Liquidtight Flexible Nonmetallic Conduit is permitted for use in both exposed and concealed work for electrical systems that require flexibility and protection for conductors from vapors, liquids, or solids. Liquidtight Flexible Nonmetallic Conduit is permitted for use outdoors exposed, in concrete or masonry, and for direct burial in earth when listed and marked for the purpose. For a detailed description of the uses permitted and not permitted, refer to Article 356 [351] of the *NEC*®.

Liquidtight flexible nonmetallic conduit comes in three types:

Type LFNC-A: a smooth, seamless inner core and cover bonded together and having one or more reinforcement layers between the core and cover.

Type LFNC-B: a smooth inner surface with integral reinforcement within the conduit wall.

Type LFNC-C: a corrugated internal and external surface without integral reinforcement within the conduit.

The requirements for listed Liquidtight Flexible Nonmetallic Conduit can be found in UL 1660, *Liquidtight Flexible Nonmetallic Conduit.*

5.1 FITTING SELECTION

The *NEC*®, in Section 300.15 [300-15], requires that "Fittings and connectors shall be used only with the specific wiring methods for which they are designed and listed." Section 356.6 and 356.42 [351-26] states, "Liquidtight Flexible Nonmetallic Conduit shall be used only with terminal fittings approved for such use. Angle connectors shall not be used for concealed raceway installations." Sometimes, fittings that are "listed" for use with Liquidtight Flexible Metal Conduit are also listed for used with Type LFNC-B Liquidtight Flexible Nonmetallic Conduit. A description of these fittings is given in Section 4, *Fittings for Use with Liquidtight Flexible Metal Conduit*. The manufacturer's instructions, labels, and literature should be consulted to determine the specific wiring methods for which the fittings are intended and "listed." Refer to the "Required Marking" section for guidance in identifying the "listed" uses of such fittings.

Liquidtight Flexible Nonmetallic Conduit fittings are available in various designs. These fittings all serve to prevent the ingress of liquids into the raceway and enclosure system. They also provide mechanical protection for the conductors entering an enclosure. Fittings are available in both straight and angle (45 and 90 degree) designs. See Figure 5-1 for typical designs.

Fittings supplied with locknuts are for the purpose of sealing at an enclosure knockout or fitting joint. A sealing ring or other device may be supplied or recommended as a provision of the fitting's "Liquidtight" listing. These fittings may also provide a Liquidtight joint when installed into a threaded entry of an enclosure. When utilized in this way, the sealing device and locknuts are not used. Liquidtight Flexible Nonmetallic Conduit fittings supplied without locknuts are generally intended only for use in threaded entries of enclosures. Fittings without locknuts may also be installed in unthreaded entries when an appropriate size listed locknut is used as part of the assembly. A sealing ring or other device may also be necessary for such Liquidtight applications. Again, the manufacturer's instructions, labels, and literature should be consulted to determine the specific applications for which the fitting is intended and "listed."

Metallic connectors for use with Liquidtight Flexible–Nonmetallic Conduit are also offered with an optional "insulated throat." The fitting's throat is not required to be insulated but some installers prefer the increased conductor protection provided by this design option. Insulating throats also provide the required protection against physical damage for 4 AWG and larger ungrounded conductors.

© Copyright 2003 by the National Electrical Manufacturers Association.

Copyright National Electrical Manufacturers Association
Provided by IHS under license with NEMA
No reproduction or networking permitted without license from IHS
Not for Resale

Liquidtight Flexible Nonmetallic Conduit and fittings may also be suitable for use in certain adverse environments along with appropriate enclosures. The specific requirements for “Type Rated” enclosures and fittings to be used in these applications are found in ANSI/NEMA 250, *Enclosures for Electrical Equipment (1000 Volts maximum),* and ANSI/UL 50, *Standard for Enclosures for Electrical Equipment.*

LFNC fittings are referred to by the trade size of the Liquidtight Nonmetallic Conduit for which they are designed, typically 3/8 (12) through 4 (103). Recently, metric designators have been introduced which correspond to these traditional trade sizes. Table 1 provides a cross-reference of traditional trade sizes to these metric designators.

5.1.1 Environmental Considerations

Fittings for use in wet locations must be suitable for the purpose. Listed “Liquidtight” fittings have been found suitable for use in wet locations as described in the *NEC®*. However, important additional considerations are necessary in making the right conduit and fitting selection.

Importantly, fittings marked “raintight” or "wet locations" are not to be automatically considered “Liquidtight.” Listed “wet locations” fittings are tested under conditions simulating typical wet locations such as exposure to pouring rain, thus the “wet locations” marking, while “Liquidtight” fittings are intended also for use in “wet” industrial environments, which may contain machine oils and coolants. The test conditions for listed “Liquidtight” fittings include an oil and water spray to simulate these harsh environments.

In its definition of "wet locations," the *NEC®* includes "...locations subject to saturation with water or other liquids, such as vehicle washing areas, and locations exposed to weather and unprotected." These are acceptable locations for "Liquidtight" fittings. However, the definition for wet locations also includes “installations underground or in concrete slabs or masonry in direct contact with the earth…" A fitting intended for these applications shall be marked “wet locations” in addition to "Liquidtight."

“Liquidtight” or “wet location” fitting designs may require a separate sealing ring to be installed outside a box or enclosure to ensure a sealed interface between the body of the fitting and the box. See “Required Marking” section.

Listed “Liquidtight” fittings are not intended for occasional, temporary, or prolonged submersion in any liquid. Fittings that may be subjected to occasional submersion in liquid in normal use must have a NEMA 6 or 6P Type rating.

5.2 REQUIRED MARKING

Required marking on “listed” Liquidtight Flexible Nonmetallic Conduit fittings, or their smallest unit shipping container, provides the installer and the electrical inspector with basic information as to the “specific wiring methods” for which the fitting has been found acceptable. The following is a summary of those markings for fittings listed for use with Liquidtight Flexible Nonmetallic Conduit.

© Copyright 2003 by the National Electrical Manufacturers Association.

Copyright National Electrical Manufacturers Association
Provided by IHS under license with NEMA
No reproduction or networking permitted without license from IHS
Not for Resale

Application	Marking	Intended Use
Liquidtight applications	Liquidtight	—
Wet locations	[a] Wet locations or Raintight	—
Wet locations (where required)	[b] between box and fitting	Listed for use in wet locations only when the specified gasket or sealing ring is installed between the fitting and the box

[a] *Recommended for future design*
[b] *Specific identification of the component to be used*

An LFNC fitting:

- for Type A conduit shall be marked **"FNMC-A ONLY"** or **"LFNC-A ONLY."**(1)
- for metallic and nonmetallic fittings for Type B conduit shall be marked **"FNMC-B"** or **"LFNC-B."**(1)
- for FNMC-C or LFNC-C **"Use with _ fittings only**," where the blank space is filled with the manufacturer's name or trademark.

(1) Recommendation for future design.

Metallic fittings that obviously cannot be connected to any type of conduit other than Liquidtight Flexible Metal Conduit or Type B conduit may have their marking on the smallest unit shipping carton rather than on the fitting itself.

A Liquidtight Flexible Nonmetallic Conduit fitting, or the smallest unit shipping carton in which it is packaged, may also be marked with an environmental type number, for example "Type 3, 3S, 4, 4X…" indicating the external conditions and degrees of ingress protection for which it is acceptable. See ANSI/NEMA 250, *Enclosures for Electrical Equipment (1000 Volts maximum),* and ANSI/UL 50, *Standard for Enclosures for Electrical Equipment,* for details and requirements for these and other type ratings. A fitting that complies with the requirements for more than one type rating may have multiple designations.

A Liquidtight Flexible Nonmetallic Conduit fitting, or the smallest unit shipping carton in which it is packaged, may also be marked "WET LOCATIONS," indicating Liquidtight fittings that have also been evaluated for direct burial applications, including in concrete or masonry, as defined by the *NEC*®.

A Liquidtight Flexible Nonmetallic Conduit fitting supplied without a locknut shall be marked:

For securement to a threaded hub only

Exception: A fitting supplied without a locknut but used within either a threaded or unthreaded opening may have the alternative marking:

For use only with listed locknuts or securement to a threaded hub

5.3 GROUNDING

All three types of Liquidtight Flexible Nonmetallic Conduit require that an equipment grounding conductor be installed. Metal fittings listed for use with both Type B Liquidtight Flexible Nonmetallic Conduit and Liquidtight Flexible Metal Conduit may be listed as "grounding type." This listing applies only to application on Liquidtight Flexible Metal Conduit. See Section 4, *Fittings for Use with Liquidtight Flexible Metal Conduit*.

© Copyright 2003 by the National Electrical Manufacturers Association.

Copyright National Electrical Manufacturers Association
Provided by IHS under license with NEMA
No reproduction or networking permitted without license from IHS
Not for Resale

5.4 CONDUIT PREPARATION AND FITTING ASSEMBLY TECHNIQUE

Performance test methods for LFNC fittings are designed to recognize the variability inherent in field applications. The most efficient assembly of a Liquidtight Flexible Nonmetallic Conduit and fitting system can be achieved, and optimum performance ensured, by adherence to simple conduit preparation and assembly techniques:

- Square the end of the conduit.
- Fully insert the conduit flush with the fitting's end stop.
- Ensure jacketing over conduit is not cut or ripped in any location.

For conduit preparation, always follow the conduit manufacturer's instructions.

Start the assembly of the fitting to the Liquidtight conduit by cutting the end of the conduit squarely using a hacksaw or similar tool. Liquidtight conduit manufacturers sometime offer cutting jigs specifically for this purpose. A hack saw blade should have 24-32 teeth per inch. A power band saw, when used, should be set at a speed no greater than 400 feet/minute. The squared end of the conduit must be fully inserted onto the ferrule component of the fitting. (See Figure 5-1.) If the conduit is not cut squarely, complete seating of the conduit to the ferrule cannot be assured. It is also important that the ferrule is inserted (screwed) all the way into the conduit to ensure proper seating of the sealing ring.

The fitting then must be securely assembled to the conduit. A compression gland nut, when supplied as part of a fitting, will typically achieve maximum securement when tightened to the torque specified in Table 4 with an appropriate tool or in accordance with manufacturer instructions.

To assure the integrity of the Liquidtight system, the full length of the conduit should be examined for cuts or tears at the time of installation.

5.5 ATTACHMENT TO BOXES OR ENCLOSURES AND SUPPORT

Assembly methods for LFNC fittings might vary. Follow the manufacturer's directions closely.

5.5.1 Attachment to Unthreaded Entries

For installations using LFNC, the electrician usually fastens the box or enclosure into position before attaching the conduit assembly. When a multi-part fitting and conduit assembly is to be attached to an unthreaded opening in a box or enclosure using a locknut, first attach the threaded body of the fitting to the box or enclosure and secure the locknut hand-tight. Then assemble the ferrule and gland nut to the end of the conduit. After the gland nut is securely tightened to the threaded body of the fitting, finish tightening the locknut.

For "one-piece" fitting designs (see Figure 5-1), the fitting is to be completely assembled to the conduit prior to attachment to the box or enclosure.

A secure attachment to a box or enclosure can be made when the locknut is hand-tightened and then further tightened 1/4 turn using an appropriate tool. When securing the locknut, care is to be taken to avoid excessive pressure where gripping the body of the fitting is necessary.

NOTE—Locknuts are not to be relied upon to penetrate nonconductive coatings on enclosures. Such coatings are to be removed in the locknut area prior to raceway assembly to assure a continuous ground path is achieved.

© Copyright 2003 by the National Electrical Manufacturers Association.

Copyright National Electrical Manufacturers Association
Provided by IHS under license with NEMA
No reproduction or networking permitted without license from IHS
Not for Resale

5.5.2 Attachment to Threaded Entries

LFNC fittings may be installed into the threaded entries provided in certain boxes, enclosures, and conduit bodies. Threaded openings may have either taper (NPT) or straight (NPS) threads, varying depth, and number of threads. Care should be taken to ensure that the threaded entry will accommodate a minimum of 3 engaged threads of the connector.

When assembling a fitting employing a compression gland into a threaded opening in an enclosure, the body of the fitting is typically disassembled from the gland nut, then threaded and wrench tightened into the enclosure entry. After proper assembly of the fitting body to the enclosure, the remaining components of the assembly should then be joined to the conduit and then to the fitting's body following the manufacturer's instructions.

Conduit and fittings manufacturers caution installers to be sure to allow for sufficient length of conduit to enable complete seating of the conduit into the fitting's ferrule and so as not to put undue stress on the conduit-to-fitting connection during attachment to the box or enclosure.

5.5.3 Support

The *NEC*®, in Article 356 [351], allows Type LFNC-B Liquidtight Flexible Nonmetallic Conduit to be used in lengths longer than 1.8 m (6 ft.). When used in lengths longer than 1.8 m (6 ft.), Type LFNC-B is required to be secured at intervals not to exceed 900 mm (3 ft.) and within 300 mm (12 in.) of each box (Note exceptions). Support in this manner ensures a minimum strain will be placed on the conduit-to-fitting and fitting-to-box connection during assembly and throughout the lifetime of the installation. Liquidtight Flexible Nonmetallic Conduit shall be supported using products intended for the purpose and mounted by hardware acceptable to the authority having jurisdiction.

A variety of straps, clamps, and hangers are available that are specifically intended to secure Liquidtight Flexible Nonmetallic Conduit and similar raceways (see Figure 5-2). These supports shall be installed only on conduit of the trade size indicated on the support or its smallest unit shipping container. The variability of mounting surfaces, expected loads, and application environments will determine the appropriate support options and mounting hardware. Design specifications usually calculate requirements based on maximum spacing intervals given in the *NEC*®. Closer support intervals than are required in the *NEC*® are an acceptable option to heavier supports and mounting hardware in some applications.

5.6 VERIFICATION OF INSTALLATION

Loosening of raceway components is sometimes encountered during the construction process. Once the raceway is fully installed and supported, all fittings and locknuts should be re-examined for tightness.

© Copyright 2003 by the National Electrical Manufacturers Association.

Copyright National Electrical Manufacturers Association
Provided by IHS under license with NEMA
No reproduction or networking permitted without license from IHS
Not for Resale



Straight LFNC Connector



45° LFNC Connector

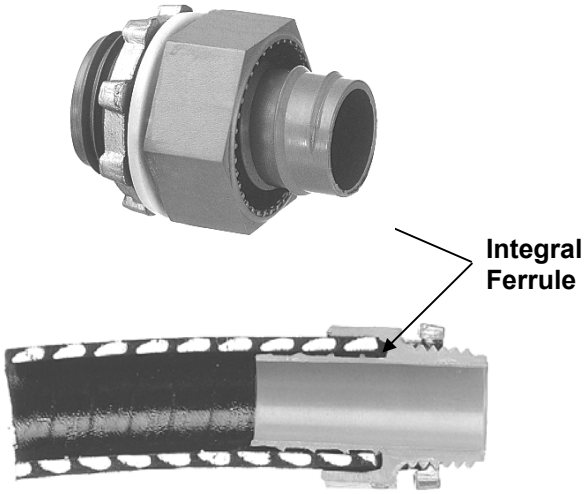

Straight LFNC Connector
"One Piece" Screw-On Style

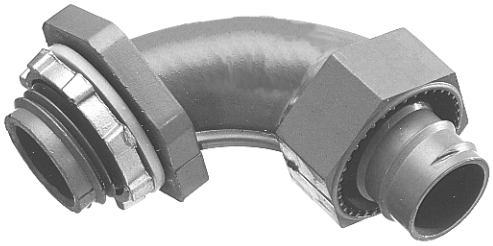

90° LFNC Connector
"One Piece" Screw-On Style

Figure 5-1
TYPICAL DESIGNS OF LIQUIDTIGHT FLEXIBLE NONMETALLIC CONDUIT FITTINGS

© Copyright 2003 by the National Electrical Manufacturers Association.

Copyright National Electrical Manufacturers Association
Provided by IHS under license with NEMA
No reproduction or networking permitted without license from IHS
Not for Resale

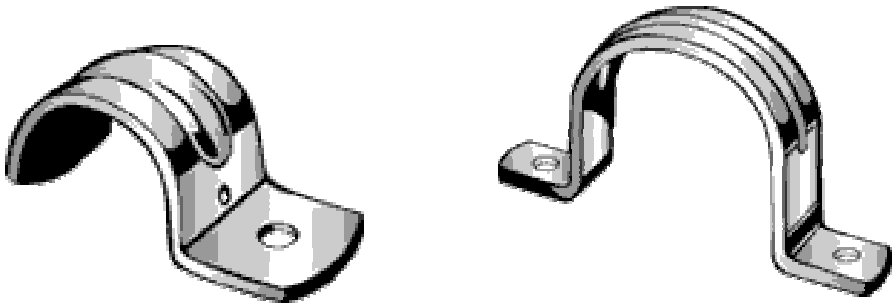

Figure 5-2
TYPICAL LIQUIDTIGHT FLEXIBLE NONMETALLIC CONDUIT SUPPORTS

© Copyright 2003 by the National Electrical Manufacturers Association.

Copyright National Electrical Manufacturers Association
Provided by IHS under license with NEMA
No reproduction or networking permitted without license from IHS
Not for Resale

Section 6
FITTINGS FOR USE WITH NONMETALLIC-SHEATHED CABLE (TYPE NM, NMC, NMS)

Nonmetallic-sheathed cable is generally permitted for use in one and two family dwellings, multi-family dwellings, and other structures. Listed Type NM and NMS cables are permitted for installation in both exposed and concealed work in normally dry locations. Listed Type NMC is permitted for use in dry, moist, damp, or corrosive locations. For a detailed description of the permitted uses of nonmetallic-sheathed cable refer to the *NEC*® Article 334 [336].

Unless otherwise stated, a reference to NM Cable in these guidelines includes types NM, NM-B, NMC, and NMS and either flat or round cable constructions.

The requirements for listed nonmetallic-sheathed cable can be found in ANSI/UL 719 "Nonmetallic-Sheathed Cable".

6.1 FITTING SELECTION

Section 300.15 [300-15] of the *NEC*® requires that "Fittings and connectors shall be used only with the specific wiring methods for which they are designed and listed."

Listed fittings, or integral box clamps for use with nonmetallic-sheathed cable are suitable for use with Types NM, NMC, and NMS cable. Listed nonmetallic-sheathed cable fittings, or integral box clamps are also suitable for use with Underground Feeder Cable (Type UF) when connected to a box or enclosure above grade. Nonmetallic-sheathed cable fittings, or integral box clamps may also be suitable for use with service entrance cable, flexible cord, or other flexible conduit or cable systems. The manufacturer's instructions, labels, and literature should be consulted to determine the specific wiring methods for which the fitting is intended, and "listed." Refer to the "Required Marking" section for guidance in identifying the "listed" uses of these fittings.

Often, nonmetallic-sheathed cable fittings are designed to accommodate a range of sizes of cable. Trade sizes for nonmetallic-sheathed cable make reference to the number and trade size of the conductors contained within (e.g. 14/2 indicates two (2) 14 AWG conductors). Although not required, often the cable construction includes a ground wire. This ground wire is not included in the conductor count represented by the cable trade size (e.g. 14/2 with ground).

The "listed" range of a NM cable fitting relates to the overall cross-sectional area of the cable. When assessing the acceptable cable range for a fitting it is not enough just to look at the conductor size. It is also necessary to consider the number of conductors included in the cable and if a ground wire is present. This is particularly important in the larger sized NM cables. For instance, a NM cable fitting indicating a listed range from 12/2 to 10/3 with ground includes 12/2 with ground, 12/3 and 10/2 with or without ground, 12/4 without ground, and 10/3 without ground. It does not however include 12/4 with ground as the overall cross section of this cable exceeds that of a 10/3 with ground. The construction of NM cables makes it difficult to measure the cable diameter. Cable manufacturers publish nominal cross sectional dimensions for their cables. This information should be referred to whenever there is a question about the whether or not a particular size cable is within the listed range of a NM cable fitting.

Fittings for use with NM cable may also make reference to traditional trade sizes (e.g. 3/8, 1/2, 3/4). These typically refer to the knockout size in a box or enclosure into which the fitting is to be mounted. Recently, metric designators were introduced that correspond to these traditional sizes. Table 1 provides a cross-reference of traditional trade sizes and these metric designators.

© Copyright 2003 by the National Electrical Manufacturers Association.

Copyright National Electrical Manufacturers Association
Provided by IHS under license with NEMA
No reproduction or networking permitted without license from IHS
Not for Resale

Listed nonmetallic-sheathed cable fittings are available in various designs. Among these are metallic constructions, single or twin-screw “saddle clamp” types and nonmetallic constructions with a cable holding “wedge”. In addition, “duplex” connectors are available employing two independent cable entries. Since splices in NM cable are required to be made in a box or enclosure, there are no fittings available for splicing two sections of NM cable. A NM cable fitting may be designed to accommodate one or more cables in a single cable entry as well. Required markings identify the fitting’s maximum intended capacity. See Figure 6-1 for typical NM cable fitting designs.

All NM cable fittings employ a locknut or integral feature as a means for securement to a box or enclosure. Certain listed outlet and switch boxes are also provided with integral clamps, which are listed for use with NM cable. See Figure 6-2 for a typical design.

6.1.1 Environmental Considerations

NM cable fittings are not for use in wet locations, for direct burial in earth, or for embedment in poured concrete. Although listed NM cable fittings are provided with corrosion protective coatings considered adequate for usual application environments, consideration should be given when installing NM cable connectors with Type NMC cable in extremely corrosive environments. The fittings manufacturer should be consulted for recommendations as to the need for supplementary protection.

6.2 REQUIRED MARKING

UL 514B marking requirements provide the installer and the electrical inspector with basic information as to the specific wiring methods for which the fitting has been found acceptable, and “listed”. Following is a summary of those markings for fittings listed for use with nonmetallic-sheathed cable.

Cable Range:

- For use with one (1) cable, 14/2 with ground or a range of cables including 14/2 with ground:

  Nonmetallic-Sheathed Cable Connector

NOTE–Cable size or range of size markings not required. Consult manufacturer’s literature.

- For use with one (1) cable that is larger than 14/2 with ground, or a range of cables not including 14/2 with ground:

  Nonmetallic-Sheathed Cable Connector

For (cable size):

Example: For 12/3 NM

or

For (cable size range)

Example: For 12/3 to 10/2 NM with ground

- For use with more than one cable per cable entry (includes 14/2 trade size)

  Nonmetallic-Sheathed Cable Connector

For (number of cables & cable size)

Example: For (2) 14/2 NM

or

© Copyright 2003 by the National Electrical Manufacturers Association.

Copyright National Electrical Manufacturers Association
Provided by IHS under license with NEMA
No reproduction or networking permitted without license from IHS
Not for Resale

For (number of cables & cable size range)

Example: For (2) 14/2 to (1) 12/3 NM

NOTE–The marking should clearly state where multiple cables of different sizes are intended.

Example: (1) 14/2 with ground with (1) 12/2

Since these fittings are typically small in size, the markings above are not usually found on the fitting itself. In such cases, the standard allows these markings to appear on the smallest unit shipping carton in which the fitting is supplied.

When a clamp or fitting is furnished as part of an outlet box, it shall be marked, on the part itself, to indicate the type of application for which it is intended to be used.

"N" for Nonmetallic-Sheathed Cable

NOTE–The cable size, size range, and number of cable markings normally appear on the smallest unit shipping carton due to size constraints.

6.3 GROUNDING

Due to its jacket construction, NM cable is not recognized as an equipment grounding conductor in accordance with *NEC*® Article 250. Only when the cable contains the separate grounding conductor as part of its design, is it capable of carrying a ground current. The NM cable fittings are solely relied upon for mechanical securement of the nonmetallic-sheathed cable and effective closure of the box or enclosure cable entries. Fittings constructed of metal are considered bonded when assembled as intended to a properly grounded metal box or enclosure.

6.4 CABLE PREPARATION AND FITTING ASSEMBLY TECHNIQUE

Performance test methods for NM cable fittings attempt to recognize the variability inherent in field applications. The most efficient assembly of a nonmetallic-sheathed cable and fitting system can be achieved, and optimum performance ensured, by adherence to the following simple cable preparation and assembly techniques.

- Securely assemble the NM cable fitting to the box or enclosure before assembling the cable.
- Position and secure the fitting to the outer sheath of the NM cable.
- Take care not to cut or scar the insulation on individual conductors when stripping the outer sheathing of the cable.
- Take care when torquing the fitting's securement screws.

For cable preparation, always follow the cable manufacturer's instructions.

Before assembling the NM cable, a fitting for NM cable should first be securely fastened to the box or enclosure and the locknut, when part of the fitting's design, secured handtight. This practice will minimize potential twisting of the cable during its assembly and preparation, which could result in damage to the cable sheath.

6.4.1 Inserting NM Cable

After securement of the fitting to the box or enclosure, the cable may be fed into the cable entry of the fitting or box clamp through the opening provided in the box. A sufficient working length of cable should be fed into the box or enclosure to permit cable preparation outside of the face of the box whenever possible. When calculating "sufficient working length" of cable, refer to *NEC*® Section 300.14 [300-14].

© Copyright 2003 by the National Electrical Manufacturers Association.

Copyright National Electrical Manufacturers Association
Provided by IHS under license with NEMA
No reproduction or networking permitted without license from IHS Not for Resale

6.4.2 Cable Preparation

Next, the appropriate amount of the outer sheath of the cable is to be removed to expose the separate conductors. Extreme care must be taken during this process, not to damage the individual conductors' insulation or to cut, puncture or otherwise damage the cable's sheath. Taking into consideration the requirements in *NEC*® Section 300.14 [300-14], we recommend that enough cable sheath be removed to expose additional free conductor.

6.4.3 Seating a Securement Clamp

After preparing the cable as described above, position the cut end of the cable sheath so that at least 6 mm (1/4 in.) extends beyond the exit end of the NM cable fitting or box clamp. If necessary, rotate the cable to ensure the clamp will effectively seat on a flat surface of the cable sheath when finally secured. For a round shaped cable, a flat surface can usually be found along its length, by applying gentle pressure between the thumb and index finger.

6.4.4 Screw Tightening Torque

The designed performance of NM cable fittings is dependent on adequately securing the cable holding device. By nature of its pliable construction, the outer sheath of Type NM cable may be damaged by over-torquing the securement screws often used with NM cable fittings and box clamps. Similar damage can result by over-driving a securement wedge used on some fitting designs. The experienced electrician has typically relied on the "measure by feel" approach over the years. Performance tests in the product standards for NM cable fittings prescribe testing under assembly torque of. 15 to 20 lb-in. (1.7 to 3.95 N•m) All listed fittings have met standard performance requirements after such "typical" assembly.

Some fitting designs include a raised boss (See Figure 6-1). It is usually not necessary, or intended that the screw be tightened to the point that its head be in contact with the boss.

NEMA advocates the use of torque indicating tools for assembly of NM cable fittings. Suffice to say that care should be taken during the final tightening of the cable holding device not to cut, puncture or otherwise damage the cable's sheathing. Table 2 provides a complete reference of standard assembly torque for screws typically used with NM cable clamps and fittings. If a manufacturer prescribes a tightening torque other than that in the standard as a condition of listing, that recommended torque value must be marked on the installation instructions or the smallest unit shipping carton supplied with the fitting.

6.5 ATTACHMENT TO BOXES AND SUPPORT

6.5.1 Attachment to Unthreaded Entries

For installations where NM cable is used, electricians usually fasten the boxes into position on the framing members before attaching the cable assembly. Cable and fittings manufacturers caution installers to be sure to allow for sufficient length of cable to enable sheathing to be removed to expose the prescribed length of conductor.

As stated above, nonmetallic-sheathed cable fittings should be attached to the knockouts in a box or enclosure prior to assembly of the cable. Locknuts, when provided with such fittings, should be hand tightened to the box and then, after complete assembly of the cable, further tightened 1/4 turn utilizing an appropriate tool. When securing the locknut, care is to be taken to avoid excessive pressure where gripping the fitting is necessary. Tightening of the fitting to the locknut is not recommended. Fittings secured to a box or enclosure by means other than a locknut should be assembled to the box and the cable according to the manufacturer's instructions.

© Copyright 2003 by the National Electrical Manufacturers Association.

Copyright National Electrical Manufacturers Association
Provided by IHS under license with NEMA
No reproduction or networking permitted without license from IHS
Not for Resale

NOTE–Locknuts are not to be relied upon to penetrate nonconductive coatings on metal enclosures. Such coatings are to be removed in the locknut area prior to cable assembly to assure that an effective electrical bond is achieved.

6.5.2 Attachment to Threaded Entries

NM Cable fittings having external threads may be installed to threaded entries provided in certain boxes, enclosures and conduit bodies. The external threads of NM cable fittings conforming to ANSI/NEMA FB 1 have straight threads (NPS). Threaded openings where these fittings may be installed may have either taper (NPT) or straight (NPS) threads, varying depth and number of threads. Care must be taken to ensure that a minimum of 3 threads of the connector are fully engaged with the threads of the conduit entry when wrench tightened.

6.5.3 Supports

Article 334 [336] of the NEC® requires securement of nonmetallic-sheathed cables at intervals not to exceed 1.4 m (4-1/2 ft.) and within 300 mm (12 in.) from every cabinet, box, or fitting (Note exceptions in Article 334). Special provisions require securement of NM cable within 20 mm (8 in.) of a single gang, nonmetallic device box where attachment of the cable to the box is not required. Whether in exposed or concealed locations, where NM cable passes through either punched, cut or drilled slots or holes in metal framing members, the cable must be protected by listed bushings or grommets that completely cover the metal edges. These holes in framing members of metal or wood are considered as a point of support for the cable.

Where NM cable is run parallel or through a framing member it is to be positioned at least 32 mm (1.25 in.) from the inside or outside surface of a stud. Where this is not possible, a metal protector plate at least 1.59 mm (1/16 in.) thick is to be installed to prevent potential damage from nails or screws used in securing the wall surface.

A variety of straps, clamps, and staples are available which are specifically intended to support NM cable and similar cable systems. These supports are to be installed only on cable of the trade size indicated on the support or its smallest unit shipping container. The variability of mounting surfaces, and application environments will determine the appropriate support options and securement hardware. Design specifications usually calculate requirements based on the maximum spacing intervals that are required in the *NEC*®. Closer support intervals than are required in the *NEC*® are an acceptable option to heavier supports and mounting hardware in some applications. See Figure 6-3 for examples of the common products used for securing NM cables.

Among the most common methods used to secure NM cable to wood framing members are staples. While the intent of the *NEC*® is that NM cable be securely fastened in place, care should be taken to ensure the staples are not over-driven. This can be very subjective. Although a staple driven so as to hold the cable securely may not appear to damage the cable, the pressure on the cable's sheath over time (cold flow), and the heat of the conductors may result in deterioration of the protective sheath. Many jurisdictions require metal staples to have a protective layer of non-conductive material installed between the staple saddle and the cable sheath. Some cable staples (nail straps) have nonmetallic saddles, which are formed for the size of the cable for which they are designed. The legs of these saddles also provide a degree of protection against over-driving of the nails.

NM cable should always be laid flat under a staple and never secured on end (see Figure 6-4). Oversized staples should not be used. While some staples will permit the stacking of more than one NM cable under one staple, the installer should consult the authority having jurisdiction to be certain this practice will not require de-rating of the circuit. Cable support hardware devices are available that permit stacking of NM cables and also are designed to arrange the cables to comply with the requirement for positioning the cables a minimum of 32 mm (1.25 in.) from the inside or outside surface of a stud.

© Copyright 2003 by the National Electrical Manufacturers Association.

Copyright National Electrical Manufacturers Association
Provided by IHS under license with NEMA
No reproduction or networking permitted without license from IHS
Not for Resale

6.6 VERIFICATION OF INSTALLATION

Loosening of system components is sometimes encountered during the construction process. Once the cable system is fully installed and supported, all fittings, locknuts, clamps, and supports should be re-examined for secureness. Wherever damage to the NM cable sheath is identified, appropriate steps to remedy the situation should be taken.

© Copyright 2003 by the National Electrical Manufacturers Association.

Copyright National Electrical Manufacturers Association
Provided by IHS under license with NEMA
No reproduction or networking permitted without license from IHS
Not for Resale



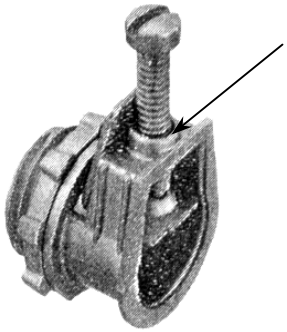

Typical NM Cable Connectors With Locknut

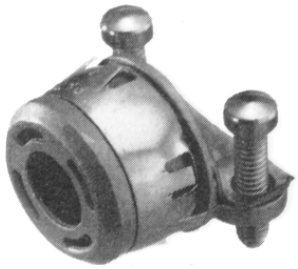

NM Cable Connector Without Locknut

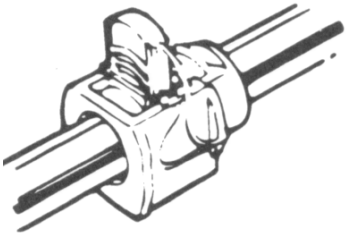

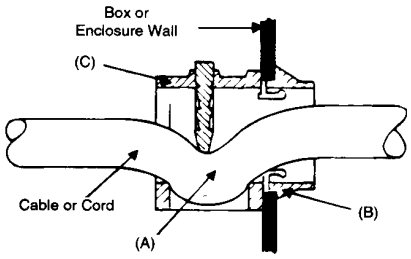

NM Cable Connector With Wedge-type Cable Securement

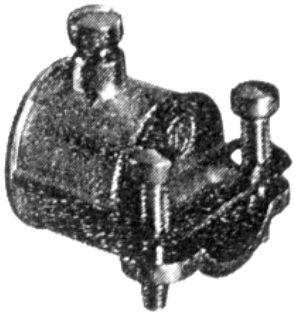

Transition Coupling NM Cable to Another Cable or Raceway

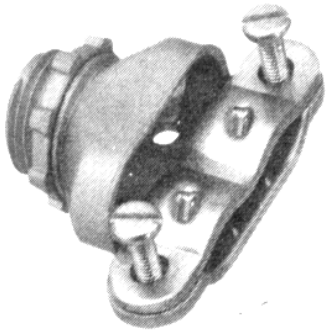

Duplex NM Cable Connector

Figure 6-1
TYPICAL DESIGNS OF NM CABLE FITTINGS

© Copyright 2003 by the National Electrical Manufacturers Association.

Copyright National Electrical Manufacturers Association
Provided by IHS under license with NEMA
No reproduction or networking permitted without license from IHS
Not for Resale

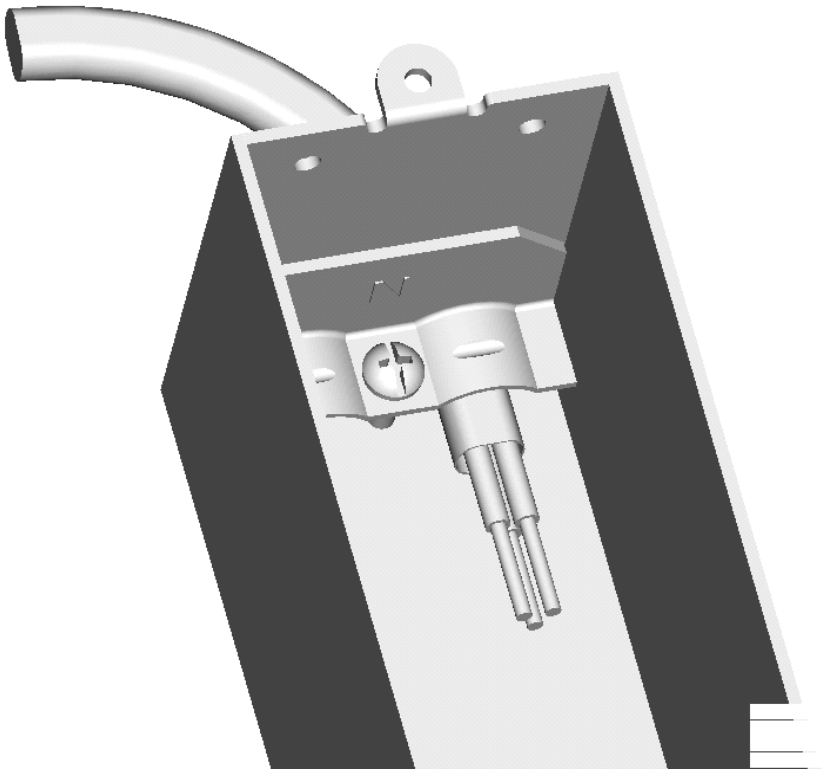

Figure 6-2
TYPICAL DESIGN OF INTEGRAL BOX CLAMP FOR NM CABLE

© Copyright 2003 by the National Electrical Manufacturers Association.

Copyright National Electrical Manufacturers Association
Provided by IHS under license with NEMA
No reproduction or networking permitted without license from IHS
Not for Resale

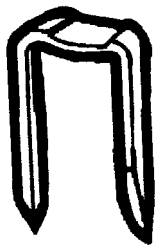

Steel NM Cable Staple



Steel NM Cable Staple With non-conductive barrier

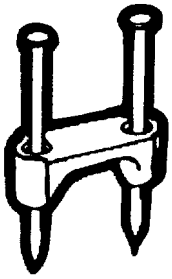

Nail Strap For NM Cable

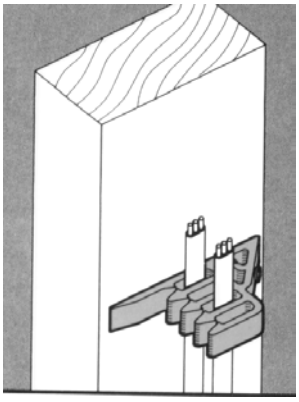

NM Cable Stacking Support

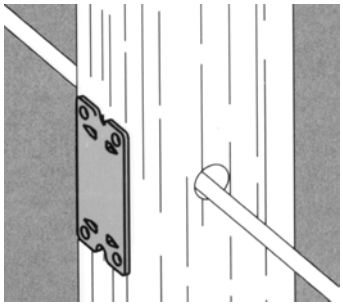

Protector Plate

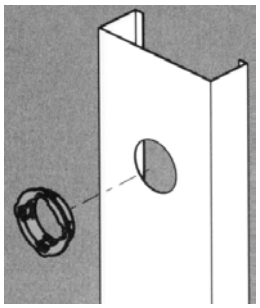

Metal Stud Bushing

Figure 6-3
COMMON NM CABLE SUPPORT AND PROTECTION PRODUCTS

© Copyright 2003 by the National Electrical Manufacturers Association.

Copyright National Electrical Manufacturers Association
Provided by IHS under license with NEMA
No reproduction or networking permitted without license from IHS
Not for Resale

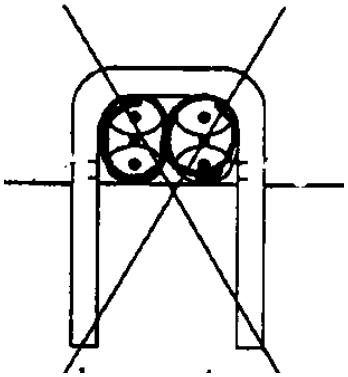

INCORRECT
Do not staple two-conductor cable on end

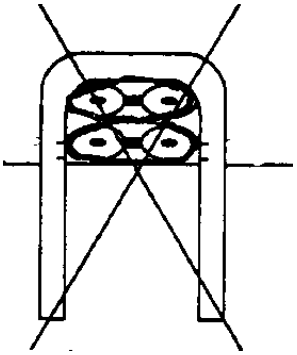

INCORRECT
Unless staple is approved for two cables

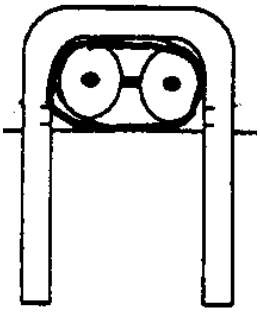

CORRECT

Figure 6-4
POSITIONING NM CABLES UNDER STAPLES

© Copyright 2003 by the National Electrical Manufacturers Association.

Copyright National Electrical Manufacturers Association
Provided by IHS under license with NEMA
No reproduction or networking permitted without license from IHS
Not for Resale

Table 1
TRADE SIZES AND METRIC DESIGNATORS

Trade Size	Metric Designator
3/8	12
1/2	16
3/4	21
1	27
1-1/4	35
1-1/2	41
2	53
2-1/2	63
3	78
3-1/2	91
4	103

Table 2
STANDARD ASSEMBLY TORQUE VALUES FOR AC, FMC, MC, AND NM CABLE FITTINGS
(Torque applied to test assemblies of listed fittings[1])

	Trade Size of Securement Means Torque: lb-in. (N-m)					Trade Size of MC Fittings Torque: lb-in. (N-m)					
Trade Size	**6**	**8**	**10**	**12**	**1/4+**	**1/2**	**3/4**	**1**	**1¼**	**1½**	**2+**
Screws [2]	12 (1.38)	20 (2.26)	35 (3.96)	35 (3.96)	35 (3.96)						
Bolt Head Screws [3]				160 (18.1)	160 (18.1)						
Compression Gland Nut						300 (33.9)	500 (56.5)	700 (79.1)	1000 (113)	1200 (136)	1600 (181)
Locknuts						Handtight +¼ turn					

[1] Test assemblies evaluated with alternative torque must be marked to indicate the manufacturer's recommended torque.

[2] Screwdriver applied (e.g. slotted, Phillips, Robertson-square drive head, or combinations). Also includes bolt head screws having provision for tightening with a screwdriver.

[3] Usually square or hexagonal, without provision for tightening with a screwdriver.

© Copyright 2003 by the National Electrical Manufacturers Association.

Copyright National Electrical Manufacturers Association
Provided by IHS under license with NEMA
No reproduction or networking permitted without license from IHS
Not for Resale

Table 3
ASSEMBLY TORQUE VALUES FOR TYPE LFMC FITTINGS

Trade size of fitting	Metric designator	Tightening Torque	
		lbf-in.	N-m
1/4	10	175	19.8
3/8	12	235	26.6
1/2	16	300	33.9
3/4	21	500	56.5
1	27	700	79.1
1-1/4	35	1000	113
1-1/2	41	1200	136
2	53	1600	181
2-1/2	63	1600	181
3	78	1600	181
3-1/2	91	1600	181
4	103	1600	181

Table 4
ASSEMBLY TORQUE VALUES FOR LFNC FITTINGS

Trade size of fitting	Metric designator	Tightening Torque	
		lbf-in	N- m
1/4	10	175	19.8
3/8	12	200	22.6
1/2	16	300	33.9
3/4	21	500	56.5
1	27	700	79.1
1-1/4	35	1000	113
1-1/2	41	1200	136
2	53	1600	181
2-1/2	63	1600	181
3	78	1600	181
3-1/2	91	1600	181
4	103	1600	181

© Copyright 2003 by the National Electrical Manufacturers Association.

Copyright National Electrical Manufacturers Association
Provided by IHS under license with NEMA
No reproduction or networking permitted without license from IHS
Not for Resale

<This page is intentionally left blank.>

© Copyright 2003 by the National Electrical Manufacturers Association.

Copyright National Electrical Manufacturers Association
Provided by IHS under license with NEMA
No reproduction or networking permitted without license from IHS
Not for Resale