NEMA FB 2.10

Selection and Installation Guidelines for Fittings for Use with Non-Flexible Metallic Conduit or Tubing (Rigid Metal Conduit, Intermediate Metal Conduit, and Electrical Metallic Tubing)

Copyright National Electrical Manufacturers Association
Provided by IHS under license with NEMA
No reproduction or networking permitted without license from IHS
Not for Resale

Copyright National Electrical Manufacturers Association
Provided by IHS under license with NEMA
No reproduction or networking permitted without license from IHS
Not for Resale

NEMA Standards Publication FB 2.10-2003

Selection and Installation Guidelines
For Fittings for Use With Non-Flexible Metallic Conduit or Tubing
(Rigid Metal Conduit, Intermediate Metal Conduit,
and Electrical Metallic Tubing)

Published by:

National Electrical Manufacturers Association
1300 North 17th Street, Suite 1847
Rosslyn, VA 22209

www.nema.org

© Copyright 2003 by the National Electrical Manufacturers Association. All rights including translation into other languages, reserved under the Universal copyright Convention, the Berne Convention for the Protection of Literary and Artistic Works, and the International and Pan American Copyright Conventions.

Copyright National Electrical Manufacturers Association
Provided by IHS under license with NEMA
No reproduction or networking permitted without license from IHS
Not for Resale

NOTICE AND DISCLAIMER

The information in this publication was considered technically sound by the consensus of persons engaged in the development and approval of the document at the time it was developed. Consensus does not necessarily mean that there is unanimous agreement among every person participating in the development of this document.

The National Electrical Manufacturers Association (NEMA) standards and guideline publications, of which the document contained herein is one, are developed through a voluntary consensus standards development process. This process brings together volunteers and/or seeks out the views of persons who have an interest in the topic covered by this publication. While NEMA administers the process and establishes rules to promote fairness in the development of consensus, it does not write the document and it does not independently test, evaluate, or verify the accuracy or completeness of any information or the soundness of any judgments contained in its standards and guideline publications.

NEMA disclaims liability for any personal injury, property, or other damages of any nature whatsoever, whether special, indirect, consequential, or compensatory, directly or indirectly resulting from the publication, use of, application, or reliance on this document. NEMA disclaims and makes no guaranty or warranty, expressed or implied, as to the accuracy or completeness of any information published herein, and disclaims and makes no warranty that the information in this document will fulfill any of your particular purposes or needs. NEMA does not undertake to guarantee the performance of any individual manufacturer or seller's products or services by virtue of this standard or guide.

In publishing and making this document available, NEMA is not undertaking to render professional or other services for or on behalf of any person or entity, nor is NEMA undertaking to perform any duty owed by any person or entity to someone else. Anyone using this document should rely on his or her own independent judgment or, as appropriate, seek the advice of a competent professional in determining the exercise of reasonable care in any given circumstances. Information and other standards on the topic covered by this publication may be available from other sources, which the user may wish to consult for additional views or information not covered by this publication.

NEMA has no power, nor does it undertake to police or enforce compliance with the contents of this document. NEMA does not certify, test, or inspect products, designs, or installations for safety or health purposes. Any certification or other statement of compliance with any health or safety–related information in this document shall not be attributable to NEMA and is solely the responsibility of the certifier or maker of the statement.

© Copyright 2003 by the National Electrical Manufacturers Association.

Copyright National Electrical Manufacturers Association
Provided by IHS under license with NEMA
No reproduction or networking permitted without license from IHS
Not for Resale

CONTENTS

Page

Foreword iii
Introduction iv
Product Standards and Installation Codes v

Section 1 FITTINGS FOR USE WITH ELECTRICAL METALLIC TUBING (EMT)

1.1 Fitting Selection 1
1.1.1 Rain-Tight Type Fittings for EMT (For Use in Wet Location) 2
1.1.2 Concrete-Tight Type Fittings for EMT 2
1.1.3 Expansion Fittings 2
1.2 Required Marking 2
1.2.1 EMT Size and Material Type 3
1.2.2 Application Environment 3
1.3 Grounding 3
1.4 Raceway Preparation and Fitting Assembly Technique 4
1.4.1 Tightening Torque 4
1.4.2 Concrete-Tight Type Fittings 5
1.5 Attachment to Boxes and Support 5
1.5.1 Attachment to Threaded Entries 6
1.6 Verification of Installation 6

Section 2 FITTINGS FOR USE WITH RIGID AND INTERMEDIATE METAL CONDUIT

2.1 Fitting Selection 10
2.1.1 Rain-Tight Type Fittings for Rigid Metal Conduit/IMC (For Use in Wet Location) 11
2.1.2 Concrete-Tight Type Fittings for Rigid Metal Conduit/IMC 12
2.1.3 Expansion Fittings 12
2.2 Required Marking 12
2.2.1 Conduit Size and Material Type 12
2.2.2 Application Environment 13

© Copyright 2003 by the National Electrical Manufacturers Association.

Copyright National Electrical Manufacturers Association
Provided by IHS under license with NEMA
No reproduction or networking permitted without license from IHS
Not for Resale

2.3 Grounding 13
2.4 Raceway Preparation and Fitting Assembly Technique 13
2.4.1 Threadless Fittings 13
2.4.2 Tightening Torque 14
2.4.3 Concrete-Tight Type Fittings 14
2.4.4 Threaded Fittings for Threaded Conduit 15
2.5 Attachment to Boxes and Support 15
2.6 Attachment to Threaded Entries 16
2.7 Verification of Installation 16

TABLES

Table 1-1 NOMINAL TRADE SIZES AND METRIC DESIGNATORS FOR EMT 6
Table 1-2 TIGHTENING TORQUE OF EMT FITTINGS 7
Table 2-1 NOMINAL TRADE SIZES AND METRIC DESIGNATORS FOR RIGID METAL CONDUIT AND IMC 17
Table 2-2 TIGHTENING TORQUE FOR RIGID AND IMC FITTINGS 17

FIGURES

Figure 1-1 TYPICAL ELECTRICAL METALLIC TUBING FITTING DESIGNS 8
Figure 1-2 TYPICAL SUPPORTS FOR EMT 9
Figure 2-1 TYPICAL RIGID AND INTERMEDIATE METAL CONDUIT FITTING DESIGNS 18
Figure 2-2 TYPICAL THREADED CONDUIT ENTRIES 20
Figure 2-3 TYPICAL SUPPORTS FOR RIGID METAL CONDUIT/IMC 21

© Copyright 2003 by the National Electrical Manufacturers Association.

Copyright National Electrical Manufacturers Association
Provided by IHS under license with NEMA
No reproduction or networking permitted without license from IHS
Not for Resale

Foreword

These selection and installation guidelines offer practical information on correct product selection and industry recommended practices for the installation of fittings for nonflexible metallic conduit or tubing in accordance with the National Electrical Code®.

These guidelines have been developed by the NEMA Conduit Fittings Section, which periodically reviews them for any revisions necessary to address changing conditions, product listing and installation requirements, and technical progress. Comments for proposed revisions are welcomed and should be submitted to:

Vice President, Engineering
National Electrical manufacturers Association
1300 North 17th Street, Suite 1847
Rosslyn, VA 22209

At the time of approval, the Conduit Fittings Section of the National Electrical Manufacturers Association had the following members:

AFC Cable Systems—New Bedford, MA
Adalet-PLM, Division of Scott & Fetzer Co—Cleveland, OH
Appleton Electric, EGS Electrical Group—Skokie, IL
Arlington Industries, Inc.—Scranton, PA
Bridgeport Fittings, Inc.—Bridgeport, CT
Carlon, Lamson & Sessions—Cleveland, OH
Cooper B-Line—Highland, IL
Crouse-Hinds—Syracuse, NY
Erico, Inc.—Solon, OH
Kellems Division, Hubbell Incorporated—Stonington, CT
Killark Electric Manufacturing Company, Hubbell Incorporated—St. Louis, MO
Minerallac Electric Company—Addison, IL
Neer Manufacturing, EGS Electrical Group—Lexington, OH
O-Z/Gedney Company, EGS Electrical Group—Terryville, CT
Pass & Seymour/Legrand—Syracuse, NY
Progressive Machine Die, Inc.—Walton Hills, OH
Producto Electric Corporation—Orangeburg, NY
Red Dot Division, L E Mason Company—Boston, MA
Raco, Hubbell Incorporated—South Bend, IN
Regal Manufacturing, Division of Creftcon Industries—Industry, CA
Steel City—Memphis, TN
Steel Electric Products Company, Inc.—Brooklyn, NY
Thepitt Electrical Products, Crouse-Hinds—Meadow Lands, PA
Thomas & Betts Corporation—Memphis, TN

© Copyright 2003 by the National Electrical Manufacturers Association.

Copyright National Electrical Manufacturers Association
Provided by IHS under license with NEMA
No reproduction or networking permitted without license from IHS
Not for Resale

Introduction

It is a common perception that in any continuous system, the joints (splices, taps, couplings, connections) are the weakest link. In fact, specifically by design, this is not usually the case. In order to achieve this design performance, variables such as *selection; preparation; assembly technique* must be considered. We know it is not practical to have a system without splices and joints, and terminations, and so we strive to build in safety where these occur.

The expectations and demands on our electrical raceway systems have evolved throughout the twentieth century. Metallic conduit raceway systems (conduit, fittings, and enclosures) originally intended just to provide mechanical protection for circuit conductors are now often relied upon to carry potentially dangerous fault currents. Flexible metallic and nonmetallic conduit and metallic and composite cable systems have been introduced to meet ever-changing market needs. Emerging manufacturing technology and economic pressures have resulted in noticeable changes to some system components. Because of this evolution, sole reliance on the historical mechanical evaluation criteria of the system's components is of increasing concern to those charged with approving an installation. These concerns are very often evidenced through product standards development and installation code processes.

Along with evolving manufacturing technology, improved and new materials and processes are used in the manufacture of conduit fittings. Considering the variety of materials: steel; iron; aluminum; zinc; and engineered plastics, the industry has come a long way in providing numerous options to solve an infinite number of applications. Through the years, NEMA member companies who manufacturer conduit fittings have met the needs of the market with new and innovative product designs that continue to live up to higher standards demanded by the market.

These guidelines are written by the NEMA Conduit Fittings Section (5-FB) to provide installers and inspectors with an industry perspective of what has changed and what has not, how product standards have evolved with technology and product changes, and some of our industry's concerns and challenges as we move into the 21st century. The member companies of the NEMA Conduit Fittings Section promote the selection and installation of listed conduit and cable fittings, listed conduit and cable, and associated supports. Listing of electrical system components qualifies them to minimum performance requirements and provides for ongoing conformity surveillance. Listed conduit fittings can be recognized by the trademark of the qualified electrical testing laboratory on the part or its smallest unit container.

It is our objective to develop a closer liaison with the installers of our products and the professional electrical inspector. Through this liaison, we intend to provide uniform education and understanding as to the intended use and application of our products and develop an alliance, founded in trust, that will enable us together to address and resolve the concerns and challenges we each face.

NOTE—All references to the National Electrical Code® are to the 2002 Edition. 1999 NEC references are retained in brackets [ ].

© Copyright 2003 by the National Electrical Manufacturers Association.

Copyright National Electrical Manufacturers Association
Provided by IHS under license with NEMA
No reproduction or networking permitted without license from IHS
Not for Resale

Product Standards and Installation Codes

Conduit and cable fittings for use in ordinary locations (locations not classified as hazardous) in the U.S. are typically designed and manufactured to meet the requirements of National Electrical Manufacturers Association Standards Publication ANSI/NEMA FB 1, *Fittings, Cast Metal Boxes, and Conduit Bodies for Conduit and Cable Assemblies*. Listed fittings are typically evaluated to Underwriters Laboratories Standard ANSI/UL 514B, *Fittings for Cable and Conduit*. Specific use information related to listed fittings is available in the UL General Information for Electrical Equipment Directory, or online at www.ul.com.

Conduit and cable fittings designed and manufactured to ANSI/NEMA FB 1 have fundamental design elements in common. NEMA conduit fittings manufacturers have agreed that these basic design and construction features are fundamental to safety, performance, interchangeability, and system compatibility. Besides outlining the essential functional characteristics of conduit and cable fittings, NEMA FB 1, as a voluntary consensus design standard, tends to be very specific in suggesting types of materials, acceptable wall thickness, corrosion protection, and other minimum criteria for metallic components, and physical properties requirements for nonmetallic components.

An evaluation by a qualified electrical testing laboratory verifies that listed fittings contain essential design characteristics such as conduit end stops, conduit centering stops (for couplings), smooth-rounded wire entries, minimum corrosion protective coatings, and essential dimensions (e.g. throat diameters) that are within specified tolerances. A listed conduit fitting can be identified by the distinctive trademark of the testing laboratory on the fitting itself and/or on the smallest unit container. Performance tests include mechanical sequences (e.g. Assembly, Bend Tests, Pull Tests) and electrical tests (e.g. milli-volt drop before and after Bend Test in mechanical sequence, Fault Current Test, Electrical Continuity Test) designed to represent “real life” for these fittings both during installation and in service throughout the useful life of the system.

As one might imagine, these standards are dynamic and have changed over time to address the needs and expectations of the installer and the electrical inspector.

Among one of the most significant changes in the UL 514B standard in recent times is:

A fitting shall be investigated for use with conduit or cable of each type, size, wall thickness, and material, as recommended by the manufacturer; and for a fitting that has been found acceptable for specific conditions of installation, for use with a specific conduit or cable construction, or for use with certain wiring systems; the condition of installation or the intended use shall be indicated by marking on the smallest-unit carton in which the product is packaged.

These standard revisions recognized that something had changed. They meet with the intent of NEC® Section 100.3(B) [110-3(b)] by providing the installer with necessary information. Given that all “listed” fittings have met the appropriate design and performance requirements, Selection of the right fitting for the application is the single most important factor leading to a safe, effective, and permanent installation. The way things used to be, “I’ve always used that fitting for this application,” may not be the right way today. We have to get back to the fundamentals.

Beyond selection of the right fitting for the application, almost every other variable comes down to good workmanship, something every craftsman takes pride in and that is fundamentally required by NEC® Section 110.12 [110-12], and personal preference in selecting optional features and benefits that distinguish alternative brands.

Several other significant revisions have been made to product standards in the recent past. We will cover the most important of these in the sections to follow. As you can begin to see, the conduit and cable fittings industry continues to meet each challenge as an integral component in our complex electrical distribution system.

© Copyright 2003 by the National Electrical Manufacturers Association.

Copyright National Electrical Manufacturers Association
Provided by IHS under license with NEMA
No reproduction or networking permitted without license from IHS
Not for Resale

< This page is intentionally left blank.>

© Copyright 2003 by the National Electrical Manufacturers Association.

Copyright National Electrical Manufacturers Association
Provided by IHS under license with NEMA
No reproduction or networking permitted without license from IHS
Not for Resale

Section 1
FITTINGS FOR USE WITH ELECTRICAL METALLIC TUBING (EMT)

Steel or aluminum Electrical Metallic Tubing (EMT) is for use in virtually all types of electrical systems as a raceway for branch circuits, feeders, and service entrance. EMT is permitted in both wet and dry locations and may be buried directly in earth or embedded in concrete. For a detailed description of the permitted uses of EMT, refer to *NFPA 70*, *National Electrical Code*® (NEC®), Article 358 [348].

NEC® Section 250.118 [250-118] [250-91 of 1996 NEC®] permits Electrical Metallic Tubing to serve as the equipment grounding conductor, to ground metal boxes, enclosures, etc. of the electrical system to a single grounding point.

The requirements for listed Electrical Metallic Tubing are found in UL 797, *Electrical Metallic Tubing,* and ANSI C80.3, *Electrical Metallic Tubing.*

1.1 FITTING SELECTION

The NEC®, in Section 300.15 [300-15], requires that "fittings and connectors shall be used only with the specific wiring methods for which they were designed and listed."

EMT fittings are available in a variety of materials such as fabricated steel, cast malleable iron, cast aluminum, and cast zinc. Selection of the material type of a fitting is a matter of design considerations, or personal preference as all "listed" fittings conform to the same minimum performance criteria. ANSI/UL514B, *Fittings for Cable and Conduit,* contains the requirements for listed EMT fittings. Other industry standards pertaining to EMT fittings are ANSI/NEMA FB 1, and Federal Specification A-A-50553.

Two general categories describe the means by which fittings attach to Electrical Metallic Tubing so as to assure a sound mechanical and electrical connection: Set screw type and Compression (gland) type. See Figure 1-1 for typical designs. Specialized Indenter Type Fittings are also available for use with EMT. Indenter type fittings rely on a specific indenting tool to indent both the fitting and the tubing. In addition to box connectors and couplings, other fittings designed for use with EMT include:

combination couplings: Are designed to make the transition in a raceway from EMT to another raceway type such as Rigid Conduit, Intermediate Metal Conduit (IMC), Flexible Metal Conduit (FMC), Liquidtight Flexible Metal Conduit, or another trade size of EMT,

pull elbows: Change the direction of the raceway by 90° or less and have a removable cover to facilitate wire pulling,

conduit bodies: Provide access to conductors in the raceway, allow for a change in direction of the raceway, and when listed for the purpose and marked with an internal volume, may accommodate splices or installation of certain wiring devices, and

expansion fittings: Compensate for stress on the raceway and supports that may result where substantial temperature changes are expected.

EMT connectors having throat liners of insulating material are also available. On some fitting designs, such throat liners provide the required primary means to protect the conductor's insulation during wire pulling. On most common fitting designs however, such insulating throat liners are optional. EMT connectors with insulating throats also provide the required protection against physical damage for 4 AWG and larger ungrounded conductors.

© Copyright 2003 by the National Electrical Manufacturers Association.

Copyright National Electrical Manufacturers Association
Provided by IHS under license with NEMA
No reproduction or networking permitted without license from IHS
Not for Resale

EMT fittings are referred to by the nominal trade size of the EMT for which they are designed, typically ½ (16) through 4 (103). Recently, metric trade size designators have been introduced which correspond to these traditional trade sizes. Table 1-1 provides a cross-reference between traditional and metric trade size designators. EMT in trade sizes 2-1/2 (63) through 4 (103) has the same nominal outside diameter as Rigid and Intermediate (IMC) Metal Conduits of the same trade size. Certain fittings may be suitable for use with Rigid, IMC, and EMT in these trade sizes. Refer to the "Required Marking" section for guidance in identifying listed EMT fittings and their intended use.

1.1.1 Rain-Tight Type Fittings for EMT (for Use in Wet Location)

Fittings for use in wet locations must be suitable for the purpose. Typically, only compression (gland) type EMT fittings have been listed for use in wet locations, however wet location listing is not prohibited on other design types. Refer to the Required Marking section for guidance on how to identify EMT fittings listed for use in wet locations. Raintight type EMT fittings may require a separate sealing ring to be installed outside a box or enclosure to ensure a raintight interface between the fitting's body and the box. The manufacturer's label or instructions will indicate when this is necessary. A Raintight type fitting for EMT is suitable for embedment in poured concrete or in direct contact with earth. Raintight type fittings are not necessarily suitable for use in applications where submersion in water is expected. Fittings recommended for temporary or prolonged submersion in water must have a NEMA 6 or 6P Type rating, respectively. Raintight type fittings are not considered Liquidtight. Listed Raintight fittings are tested under conditions simulating typical wet locations such as exposure to pouring rain, thus the Raintight marking, while Liquidtight fittings are intended for use in wet industrial environments, which may contain machine oils and coolants. The test conditions for listed Liquidtight fittings include an oil and water spray to simulate these harsh environments.

1.1.2 Concrete-Tight Type Fittings for EMT

Fittings for EMT that are intended for embedment in poured concrete must be suitable for the purpose. Refer to the Required Marking section for guidance on how to identify EMT fittings that are listed Concrete-tight. Compression-gland type fittings are considered concrete-tight type. All EMT fittings are considered concrete-tight when adequately taped to prevent the entrance of concrete aggregate during the construction process. A Concrete-tight type fitting is not necessarily considered Raintight type unless it is identified for that purpose. Fittings marked Raintight are also considered to be concrete-tight type.

1.1.3 Expansion Fittings

Expansion fittings are required where significant temperature changes are expected. Since the expansion rate of steel is approximately the same as most other building materials (e.g. concrete, brick, wood), expansion fittings are generally not necessary with steel raceway systems. However, in outdoor raceway spans between buildings, attached to bridges, on rooftops, etc., where expansion and contraction could result from the direct heat of the sun coupled with significant temperature drops at night, the full coefficient of expansion shall be applied in determining the need for expansion fittings. Refer to NEC® Section 300.7 [300-7] for guidance.

1.2 REQUIRED MARKING

Required marking on listed EMT fittings, or their smallest unit shipping container, provides the installer and the electrical inspector with basic information as to the specific wiring methods for which the fitting has been found acceptable. The following is a summary of those markings for fittings listed for use with Electrical Metallic Tubing:

© Copyright 2003 by the National Electrical Manufacturers Association.

Copyright National Electrical Manufacturers Association
Provided by IHS under license with NEMA
No reproduction or networking permitted without license from IHS
Not for Resale

1.2.1 EMT Size and Material Type

Listed EMT Fittings must have been investigated with each size and type of EMT for which they are intended to be used.

Marking	Intended Use
EMT	Either Steel or Aluminum EMT
Steel EMT Only (or FE EMT only)	Not listed for use with Aluminum EMT
Aluminum EMT Only (or AL EMT only)	Not listed for use with Steel EMT
For EMT and Rigid and/or IMC Conduit	Certain fittings in 2-1/2 to 4 trade sizes, are listed for use with any of these raceway types in the same trade size.

1.2.2 Application Environment

Listed EMT fittings must have been investigated for their intended use:

Marking	Intended Use
Rain-Tight (or Wet Locations)	Listed for use in wet locations; also considered concrete-tight.
In Wet Locations Use[a] Between Box and Fitting	Listed for use in wet locations only when the specified gasket or sealing ring is installed between the fitting and the box.
Concrete-Tight	Listed for embedment in poured concrete.
Concrete-Tight when Taped	Listed for embedment in poured concrete only when adequately taped to prevent the entrance of concrete aggregate.

[a] Specific identification of the component to be used.

EMT fittings, especially in the smaller trade sizes, may not be practically marked to conform to the requirements for permanence and legibility. In such cases, display of these markings is permitted on the product's smallest unit shipping container or installation instructions.

1.3 GROUNDING

As previously stated, NEC® Article 250 [250] permits Electrical Metallic Tubing to serve as the equipment grounding conductor, to ground metal boxes, enclosures, etc. of the electrical system to a single grounding point. Until February 1, 1996, listed EMT fittings were automatically assumed acceptable for equipment grounding in conjunction with listed EMT. Since then however, all listed fittings for use with EMT have been required to pass a Current Test simulating ground fault conditions. This qualification provides further assurance in the system's ability to perform under fault current conditions.

© Copyright 2003 by the National Electrical Manufacturers Association.

Copyright National Electrical Manufacturers Association
Provided by IHS under license with NEMA
No reproduction or networking permitted without license from IHS
Not for Resale

Wherever fittings are not of the grounding type, grounding and bonding bushings, locknuts, wedges or other fittings listed for this purpose are to be used.

1.4 RACEWAY PREPARATION AND FITTING ASSEMBLY TECHNIQUE

Performance test methods for EMT fittings are designed to recognize the variability inherent in field applications. The most efficient assembly of an EMT and fitting system can be achieved, and optimum performance ensured, by adherence to a few simple raceway preparation and assembly techniques.

- Cut EMT square and remove burrs before assembly.
- Remove dirt or foreign matter from the surface of the tubing to be inserted into the fitting.
- Insert EMT flush with the fitting's end stop.
- Take care when torquing the fitting's securement screw or gland nut.

For EMT preparation, always follow the tubing manufacturer's instructions.

The mechanical and electrical performance of a fitting for EMT is dependent upon an adequate, secure, and clean bearing surface for the securement screw or compression gland. The best and most efficient fitting assembly is assured when cut ends of the tubing are squared and free of burrs. Tubing ends that may have been deformed or are out of round are to be cut off squarely using a hacksaw or other appropriate tool. Any resulting burrs are to be removed from both inside and outside of the tubing with an appropriate tool. If these important steps are not taken, complete seating of the tubing into the fitting cannot be ensured.

Product standards call for EMT connectors to have a smooth end stop that will bush the ends of tubing and protect conductor insulation when wires are pulled into the raceway. When assembling a fitting to EMT, be certain the end of the tubing is completely inserted and is flush against the end stop. This ensures an adequate bearing surface for the fitting's securement screw or compression gland and the designed mechanical strength of the joint. Selection of the proper fitting to match the trade size of the tubing cannot be overemphasized.

1.4.1 Tightening Torque

The designed performance of EMT fittings is dependent on adequately torquing the fittings' securement means, set screw or compression gland nut, to the tubing. Performance typically will not be enhanced and may even be reduced when excessive torque is applied. The experienced electrician often has come to rely on the measured by feel approach when securing these fittings. Performance tests in the product standards for EMT fittings prescribe testing under specific assembly torque (e.g. average hand tightening of a No. 10 screw with a manual screwdriver is represented by 35 lbs/in. (3.96 N·m) torque). Set-screw type fittings rely on the securement screw, under controlled torque, to deform the tubing. The length of the screws provided with these fittings may vary. The appropriate torque on some designs is reached when the head of the screw touches the screw boss on the fitting (see Figure 1-1). This cannot be universally relied upon however. The screws on certain fitting designs, particularly larger trade sizes, may offer more than one tightening option including screwdriver (slot, Phillips, or Robertson-square drive) and bolt head for wrench application (hex or square). Greater mechanical advantage and torque can generally be achieved with a wrench. Where both screwdriver and wrench application options are offered, torque should be limited to that which can be applied by the screwdriver.

Compression-type EMT fittings are provided with gland nuts that, when wrench tightened, uniformly compress a split ring that secures the fitting to the tubing. It is not necessary to disassemble the fitting for installation. Simply loosen the gland nuts enough to slide the EMT past the gland ring all the way to the end stop. Hand-tighten the gland nut(s), then wrench tighten the nuts, again being careful not to exert excessive force. Generally, most compression gland nuts achieve maximum securement after 1 to 2 turns past the hand-tightened torque.

We advocate the use of torque indicating tools for assembly of EMT fittings. Care must be taken during the assembly of EMT fittings to provide adequate securement without puncturing or abnormally deforming

--`,,`,,`-`-`,,`,,`,`,,`---
© Copyright 2003 by the National Electrical Manufacturers Association.
Copyright National Electrical Manufacturers Association
Provided by IHS under license with NEMA
No reproduction or networking permitted without license from IHS
Not for Resale

(reduction of the inside diameter of the tubing by more than 15%) the tubing. Table 1-2 provides a complete reference to standard assembly torque for EMT fittings. If a manufacturer prescribes a tightening torque for a listed fitting other than that in the standard, that recommended assembly torque must be marked on installation instructions or on the smallest unit container in which the fitting is provided.

1.4.2 Concrete-Tight Type Fittings

Although threadless fittings marked "Concrete-tight" are not required to be taped prior to embedment in poured concrete, taping is recommended for all fittings which will be embedded more than 24 inches or where the pour area will be subjected to a concrete vibrator. To ensure secureness of the joint and continuous ground continuity, tape shall be applied after the fitting is assembled and secured to the conduit. Taping is to be adequate to prevent the entrance of concrete aggregate into the raceway or box. Concrete aggregate consists of cement combined with the inert material such as coarse sand. When hardened, such aggregate may be abrasive and might pose a risk to abrade conductor insulation or effectively reduce the area inside the raceway. Where EMT fittings are installed in direct contact with earth, supplemental corrosion protection is recommended.

1.5 ATTACHMENT TO BOXES AND SUPPORT

The *National Electrical Code*®, Section 300.18 [300-18], requires that a raceway be completely installed and supported before conductors are pulled into it. Likewise, when installing EMT to a box or enclosure the first section of tubing at the termination point must be securely supported prior to termination using an appropriate EMT fitting. The cantilever force resulting from an unsupported length of tubing can cause stress on both the fitting joint and the box knockout. Similarly, at coupling joints, both ends of the EMT to be coupled must be supported prior to assembly of an EMT coupling.

Proper alignment of the raceway, fitting, and box knockout is important in assuring proper assembly and secure mechanical and electrical connections. When either connection point is misaligned, there is a strong likelihood that the EMT will not remain firmly butted against the fitting's end stop. Electrical Metallic Tubing and fittings manufacturers caution installers to be sure to allow sufficient length of tubing to enable complete seating of the tubing against the fitting's end stop. As discussed earlier, this is critical in achieving the designed performance of this raceway and fitting system.

EMT fittings supplied with locknuts for attachment to a box or enclosure may be assembled first to either the tubing or the box; attachment first to the tubing is the preferred method. A secure attachment to the box can be made when the locknut is hand tightened and then further tightened 1/4 turn using an appropriate tool. When securing the locknut, care is to be taken to avoid excessive pressure where gripping the body of the fitting is necessary. Assemble fittings supplied without locknuts to EMT and the box or enclosure according to the manufacturer's installation instructions.

NOTE—Locknuts are not to be relied upon to penetrate nonconductive coatings on enclosures. Such coatings are to be removed in the locknut area prior to raceway assembly to assure a continuous ground path is achieved.

Article 358 [348] of the NEC® requires Electrical Metallic Tubing to be securely fastened at intervals not exceeding 3 m (10 ft.) and within 900 mm (3 ft.) of every box, cabinet, or fitting. Securement in this manner assures a minimum of strain will be placed on the tubing-fitting and fitting-box connections during wire pulling and throughout the lifetime of the installation. EMT shall be supported at least at the intervals required by the NEC®, using raceway supports intended for the purpose secured by hardware acceptable to the local jurisdiction.

A variety of straps, clamps, and hangers are available which are specifically intended to secure EMT. Raceway supports shall be installed only on tubing of the trade size indicated on the support or its smallest unit container. The variability of mounting surfaces, expected loads, and application environments will determine the appropriate support options and securement hardware. Design specifications usually calculate requirements based on maximum spacing intervals given in the NEC. Closer support intervals than are required by the NEC® are an acceptable option to heavier supports and mounting hardware in some applications. Figure 1-2 contains examples of typical supports for EMT.

© Copyright 2003 by the National Electrical Manufacturers Association.

Copyright National Electrical Manufacturers Association
Provided by IHS under license with NEMA
No reproduction or networking permitted without license from IHS
Not for Resale

1.5.1 Attachment to Threaded Entries

EMT connectors may be installed into the threaded entries provided in certain boxes, enclosures, and conduit bodies. EMT fittings designed to NEMA FB 1, *Fittings, Cast Metal Boxes, and Conduit Bodies for Conduit and Cable Assemblies,* have straight threads (NPS). Threaded openings where these fittings are intended to be used may have either tapered (NPT) or straight (NPS) threads. If the fitting is to be installed in an enclosure that employs threads tapped all the way through (no integral bushing) care must be taken to ensure that a minimum of 3 threads of the connector are fully engaged with the threads of the conduit entry when wrench tightened. When a conduit entry of a box or enclosure employs an integral bushing, care must be taken to ensure that 3 threads of the connector are fully engaged with the threads of the conduit entry when wrench tightened. If the specific enclosure has an environmental Type rating as described in NEMA Standards Publication 250, *Enclosures for Electrical Equipment (1000 Volts Maximum),* the fitting is expected to carry a similar or greater Type rating.

1.6 VERIFICATION OF INSTALLATION

Loosening and realignment of EMT raceway components is sometimes encountered during the construction process. Once the raceway is fully installed and supported, and prior to wire pulling, all fittings and locknuts must be re-examined for secureness. After wire pulling, a final continuity test is to be performed using any appropriate test equipment at each connection over the entire length of the raceway, as a final means of inspection for secureness of all joints.

Table 1-1
NOMINAL TRADE SIZES AND METRIC DESIGNATORS FOR EMT

Trade Size Designator	Metric Designator
1/2	16
3/4	21
1	27
1-1/4	35
1-1/2	41
2	53
2-1/2	63
3	78
3-1/2	91
4	103

© Copyright 2003 by the National Electrical Manufacturers Association.

Copyright National Electrical Manufacturers Association
Provided by IHS under license with NEMA
No reproduction or networking permitted without license from IHS
Not for Resale

Table 1-2
TIGHTENING TORQUE OF EMT FITTINGS
(Torque applied to test assemblies of listed fittings[1])

	Size of Securement Means Torque: lb-in. (N·m)					Trade Size of EMT Fittings						
	6	**8**	**10**	**12**	**1/4+**	**1/2**	**3/4**	**1**	**1¼**	**1½**	**2+**	**All**
Screws [2]	12 (1.38)	20 (2.26)	35 (3.96)	35 (3.96)	35 (3.96)							
Bolt Head Screws [3]				160 (18.1)	160 (18.1)							
Compression Gland Nut						300 (33.9)	500 (56.5)	700 (79.1)	1000 (113)	1200 (136)	1600 (181)	
Locknuts												Handtight +¼ turn
Other Threaded Connections						800 (90.4)	800 (90.4)	1000 (113)	1000 (113)	1000 (113)	1600 (181)	

NOTES—

[1] Test assemblies evaluated with alternative torque must be marked to indicate the manufacturer's recommended torque

[2] Screwdriver applied (e.g. slotted, Phillips, Robertson-square drive head or combinations). Also includes bolt head screws having provision for tightening with a screwdriver.

[3] Usually square or hexagonal, without provision for tightening with a screwdriver.

© Copyright 2003 by the National Electrical Manufacturers Association.

Copyright National Electrical Manufacturers Association
Provided by IHS under license with NEMA
No reproduction or networking permitted without license from IHS
Not for Resale

Set-Screw Type



Connector
Without Locknut
Alternate securement means to box knockout.

Connector
With Locknut
for securement to box knockout.

Coupling

Compression (Gland) Type



With Locknut
For securement to box Knockout.

Coupling

Figure 1-1
TYPICAL ELECTRICAL METALLIC TUBING FITTING DESIGNS

--`,,`-`-`,,`,,`,`,,`---

© Copyright 2003 by the National Electrical Manufacturers Association.

Copyright National Electrical Manufacturers Association
Provided by IHS under license with NEMA
No reproduction or networking permitted without license from IHS

Not for Resale



1-Hole Strap



2-Hole Strap

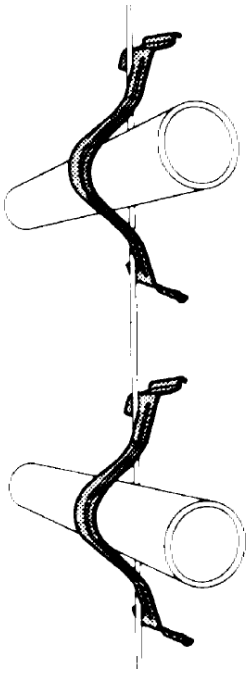

Tubing Strap to Drop Wire

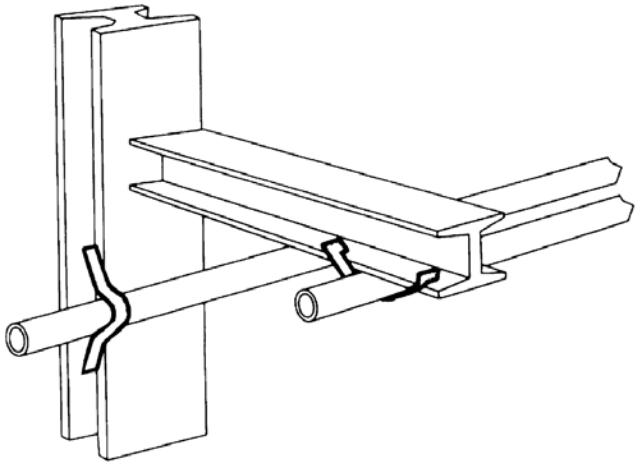

Tubing Strap to Beam



Tubing Hanger

Figure 1-2
TYPICAL SUPPORTS FOR EMT

© Copyright 2003 by the National Electrical Manufacturers Association.

Copyright National Electrical Manufacturers Association
Provided by IHS under license with NEMA
No reproduction or networking permitted without license from IHS
Not for Resale

Section 2
FITTINGS FOR USE WITH RIGID AND INTERMEDIATE METAL CONDUIT

Rigid Metal Conduit and Intermediate Metal Conduit (IMC) are permitted for use in virtually all types of electrical systems as a raceway for branch circuits, feeders, and service entrance. For the purpose of this paper, fittings specifically for use with conduits constructed of steel having a zinc-galvanized corrosion protective coating are considered. Both Rigid Metal Conduit and IMC are permitted in both wet and dry locations and may be buried directly in earth or embedded in concrete. For a detailed description of the permitted uses of Rigid Metal Conduit and IMC, refer to NFPA 70, *National Electrical Code®* (NEC®), Articles 342 [345] and 344 [346].

NEC® Section 250.118 [250-118] [Section 250-91 of the 1996 NEC®] permits Rigid Metal Conduit and Intermediate Metal Conduit (IMC) to serve as the equipment grounding conductor, to ground metal boxes, enclosures, etc. of the electrical system to a single grounding point.

The requirements for listed Rigid Metal Conduit and IMC are found in ANSI/UL 6, *Rigid Metal Conduit,* and ANSI/UL 1242, *Intermediate Metal Conduit*. Other standards addressing these raceways are ANSI C80.1, *Standard for Rigid Steel Conduit-Zinc Coated*, and ANSI C80.6, *Standard for Intermediate Metal Conduit-Zinc Coated*.

2.1 FITTING SELECTION

The NEC®, in Section 300.15 [300-15], requires that "fittings and connectors shall be used only with the specific wiring methods for which they were designed and listed." Listed Rigid Metal Conduit and IMC have virtually the same nominal outside diameter; therefore, they typically are interchangeable as far as their applications and the fittings used with them. PVC coated conduit and fittings are also available. The manufacturer's instructions, labels, and literature are to be consulted to determine the specific raceways for which a fitting is intended and "listed."

Internally threaded standard conduit couplings are factory assembled on each section of Rigid Metal Conduit and IMC. In addition, externally threaded nipples and factory bends are also available. Standard conduit couplings are also available separately. These accessories are derived from the conduit itself and comply with the same standards as the conduit. These products are outside of the scope of this guideline.

Rigid Metal Conduit and IMC fittings included in the scope of this guideline are available in a variety of materials such as fabricated steel, cast malleable iron, cast aluminum, and cast zinc. Selection of the material type of a fitting is a matter of design considerations, or personal preference as all listed fittings conform to the same minimum performance criteria. ANSI/UL514B, *Fittings for Cable and Conduit,* contains the requirements for listed Rigid Metal Conduit and IMC fittings. Other industry standards pertaining to Rigid Metal Conduit and IMC fittings are ANSI/NEMA FB 1, *Fittings, Cast Metal Boxes, and Conduit Bodies for Conduit and Cable Assemblies*, and Federal Specification A-A-50553.

Fittings for Rigid Metal Conduit and IMC are of the Threadless or Threaded type. See Figure 2-1 for typical designs. Two general categories describe the means by which threadless fittings attach to these conduits to assure a sound mechanical and electrical connection: Set screw type and Compression (gland) type. In addition to threadless box connectors and couplings, other threadless and threaded fittings designed for use with Rigid Metal Conduit and IMC include:

combination couplings: Designed to make the transition in a raceway from Rigid Metal Conduit to another raceway type such as Electrical Metallic Tubing (EMT), Flexible Metal Conduit (FMC), Liquidtight Flexible Metal Conduit, or another trade size of Rigid Metal Conduit or IMC.

hubs: Provide a threaded entry for Rigid/IMC where an integral hub is not present in a box or enclosure.

© Copyright 2003 by the National Electrical Manufacturers Association.

Copyright National Electrical Manufacturers Association
Provided by IHS under license with NEMA
No reproduction or networking permitted without license from IHS
Not for Resale

conduit locknuts: Designed to secure a threaded conduit to boxes or enclosures that do not have threaded entries.

conduit bushings: Designed to provide a smooth, rounded conduit entry to protect conductor insulation during the pulling operation.

pull elbows: To change the direction of the raceway by 90° or less and have a removable cover to facilitate wire pulling.

service entrance heads and fittings: Provide various means to transition overhead and underground services where Rigid Metal Conduit or IMC is required for mechanical protection.

conduit bodies: Provide access to conductors in the raceway, allow for a change in direction of the raceway, and when listed for the purpose and marked with an internal volume, may accommodate splices or installation of certain wiring devices.

expansion fittings: Compensate for stress on the raceway and supports that may result where substantial temperature changes are expected.

Rigid conduit/IMC fittings, including conduit bushings, having throat liners of insulating material are also available. On some fitting designs, such throat liners provide the required primary means to protect the conductor's insulation during wire pulling. On most common fitting designs however, such insulating throat liners are optional. Rigid Conduit/IMC fittings with insulating throats also provide the required protection against physical damage for 4 AWG and larger ungrounded conductors.

Rigid conduit/IMC fittings are referred to by the nominal trade size of the conduit for which they are designed, typically 1/2 (16) through 6 (155). Recently, metric trade size designators have been introduced which correspond to these traditional trade sizes. Table 2-1 provides a cross-reference between traditional and metric trade size designators. Rigid Conduit/IMC in trade sizes 2-1/2 (63) through 4 (103) has the same nominal outside diameter as Electrical Metallic Tubing (EMT) of the same trade size. Certain fittings may be suitable for use with Rigid Metal Conduit, IMC, and EMT in these trade sizes. Refer to the "Required Marking" section for guidance in identifying listed Rigid Metal Conduit and IMC fittings and their intended use.

2.1.1 Rain-Tight Type Fittings for Rigid Metal Conduit/IMC (For Use in Wet Locations)

Fittings for use in wet locations must be suitable for the purpose. For threadless fitting designs, typically, only compression (gland) type Rigid Conduit/IMC fittings have been listed for use in wet locations, however wet location listing is not prohibited on other design types. Threaded design fittings for threaded Rigid Metal Conduit and IMC may have specific conditions of installation to maintain their wet location listing. Refer to the Required Marking section for guidance on how to identify Rigid Conduit/IMC fittings listed for use in wet locations. Raintight type Rigid Metal Conduit/IMC fitting designs may require a separate sealing ring to be installed outside a box or enclosure to ensure a Raintight interface between the fitting's body and the box. The manufacturer's label or instructions will indicate when this is necessary. A Raintight type fitting for Rigid Metal Conduit/IMC is suitable for embedment in poured concrete or in direct contact with earth. Raintight type fittings are not necessarily suitable for use in applications where submersion in water is expected. Fittings recommended for temporary or prolonged submersion in water must have a NEMA 6 or 6P Type rating, respectively. Raintight type fittings are not necessarily considered Liquidtight. Listed Raintight fittings are tested under conditions simulating typical wet locations such as exposure to pouring rain, thus the Raintight marking, while Liquidtight fittings are intended for use in wet industrial environments that may contain machine oils and coolants. The test conditions for listed Liquidtight fittings include an oil and water spray to simulate these harsh environments.

© Copyright 2003 by the National Electrical Manufacturers Association.

Copyright National Electrical Manufacturers Association
Provided by IHS under license with NEMA
No reproduction or networking permitted without license from IHS
Not for Resale

2.1.2 Concrete-Tight Type Fittings for Rigid Metal Conduit/IMC

Threadless fittings for Rigid Metal Conduit or IMC intended for embedment in poured concrete must be suitable for the purpose. Refer to the Required Marking section for guidance on how to identify Rigid Metal Conduit/IMC fittings that are listed Concrete-tight. Threaded type and threadless compression gland type Rigid Metal Conduit/IMC fittings are considered Concrete-tight, and are not required to be marked for this purpose. All threadless fittings for Rigid Metal Conduit/IMC are considered concrete-tight when adequately taped to prevent the entrance of concrete aggregate during the construction process. A Concrete-tight type fitting is not necessarily considered Raintight type unless it is identified for that purpose. Fittings marked Raintight are also considered to be concrete-tight type.

2.1.3 Expansion Fittings

Expansion fittings are required where significant temperature changes are expected. Since the expansion rate of steel is approximately the same as most other building materials (e.g. concrete, brick, wood), expansion fittings are not generally necessary with steel raceway systems. However, in outdoor raceway spans between buildings, attached to bridges, on rooftops, etc., where expansion and contraction could result from the direct heat of the sun coupled with significant temperature drops at night, the full coefficient of expansion shall be applied in determining the need for expansion fittings. Refer to NEC® Section 300.7 [300-7] for guidance.

2.2 REQUIRED MARKING

Required marking on "listed" Rigid Metal Conduit and IMC fittings, or their smallest unit shipping container, provides the installer and the electrical inspector with basic information as to the "specific wiring methods" for which the fitting has been found acceptable. The following is a summary of those markings for fittings listed for use with Rigid or Intermediate Metal Conduit.

2.2.1 Conduit Size and Material Type

Listed Rigid and IMC fittings must have been investigated with each size and type of conduit for which they are intended to be used.

Marking	Intended Use
For EMT and Rigid and/or IMC	Certain fittings in 2-1/2 to 4 trade sizes are listed for use with any of these raceway types in the same trade size.
Unthreaded for [a] Conduit	A threadless fitting intended for use with unthreaded Rigid or IMC only, or with either threaded or unthreaded conduit.
Unthreaded for Threaded [a]	A threadless fitting intended for use only with threaded Rigid or IMC.

[a] Rigid, Intermediate (IMC), or both, followed by the material type:
Steel (FE) or Aluminum (AL, Alum)

© Copyright 2003 by the National Electrical Manufacturers Association.

Copyright National Electrical Manufacturers Association
Provided by IHS under license with NEMA
No reproduction or networking permitted without license from IHS
Not for Resale

2.2.2 Application Environment

Listed Rigid/IMC fittings must have been investigated for their intended use.

Marking	Intended Use
Raintight (or Wet Locations)	Listed for use in wet locations. Also considered concrete-tight.
In wet locations, use [b] between box and fitting	Listed for use in wet locations only when the specified gasket or sealing ring is installed between the fitting and the box.
Concrete-Tight	Listed for embedment in poured concrete
Concrete-Tight when Taped	Listed for embedment in poured concrete only when adequately taped to prevent the entrance of concrete aggregate.
Liquidtight	Listed for use in both wet locations and industrial applications involving sprayed machine oils and coolants.

[b] Specific identification of the component to be used.

Rigid Conduit/IMC fittings, especially in the smaller trade sizes, may not be practically marked to conform to the requirements for permanence and legibility. In such cases, display of these markings is permitted on the product's smallest unit shipping container or installation instructions.

2.3 GROUNDING

As previously stated, NEC® Article 250 [250] permits Rigid and Intermediate Metal Conduit to serve as the equipment grounding conductor, to ground metal boxes, enclosures, etc., of the electrical system to a single grounding point. Until February 1, 1996, listed Rigid/IMC fittings were automatically assumed acceptable for equipment grounding in conjunction with listed Rigid/IMC. Since then however, all "listed" fittings for use with Rigid/IMC have been required to pass a "Current Test" simulating ground fault conditions. This qualification provides further assurance in the system's ability to perform under fault current conditions.

Wherever fittings are not of the "grounding type," grounding and bonding bushings, locknuts, wedges, or other fittings listed for this purpose are to be used.

2.4 RACEWAY PREPARATION AND FITTING ASSEMBLY TECHNIQUE

Performance test methods for Rigid/IMC fittings are designed to recognize the variability inherent in field applications. The most efficient assembly of a Rigid and Intermediate Metal Conduit and fitting system can be achieved, and optimum performance ensured, by adherence to a few simple raceway preparation and assembly techniques.

2.4.1 Threadless Fittings

- Cut conduit square and remove burrs before assembly
- Remove dirt or foreign matter on the surface of the conduit to be inserted into the fitting
- Insert conduit flush with the fitting's end stop
- Take care when torquing the fitting's securement screw or gland nut

For conduit preparation, always follow the conduit manufacturer's instructions.

© Copyright 2003 by the National Electrical Manufacturers Association.

Copyright National Electrical Manufacturers Association
Provided by IHS under license with NEMA
No reproduction or networking permitted without license from IHS
Not for Resale

The mechanical and electrical performance of a threadless fitting for Rigid Metal Conduit or IMC is dependent on an adequate, secure, and clean bearing surface for the securement screw or compression gland. The best and most efficient fitting assembly is assured when cut ends of the conduit are squared and free of burrs. Conduit ends, which may have been deformed or are out-of-round should be cut off squarely using a hacksaw or other appropriate tool. Any resulting burrs are to be removed from both inside and outside of the conduit using an appropriate tool. Unless specifically recommended by the manufacturer, threadless fittings should not be assembled onto threaded ends of conduit. If these important steps are not taken, complete seating of the conduit into the fitting and a secure connection cannot be ensured.

Product standards call for Rigid Metal Conduit and IMC connectors to have a smooth end stop that will bush the ends of the conduit and protect conductor insulation when wires are pulled into the raceway. When assembling a threadless fitting to conduit, be certain the end of the conduit is completely inserted and is flush against the end stop. This ensures an adequate bearing surface for the fitting's securement screw or compression gland and the designed mechanical strength of the joint. Selection of the proper fitting to match the trade size of the conduit cannot be overemphasized.

2.4.2 Tightening Torque

The designed performance of threadless Rigid/IMC fittings is dependent on adequately torquing the fitting's securement means, set screw or compression gland nut, to the conduit. Performance typically will not be enhanced and may even be reduced when excessive torque is applied. The experienced electrician often has come to rely on the "measured by feel" approach when securing these fittings. Performance tests in the product standards for Rigid/IMC fittings prescribe testing under specific assembly torque (e.g. average hand tightening of a No. 10 screw with a manual screwdriver is represented by 35 lb./in. [3.96 N·m] torque). The length of the screws provided with these fittings may vary. The appropriate torque on some designs is reached when the head of the screw touches the screw boss on the fitting (See Figure 2-1). This cannot be universally relied upon, however. The screws on certain fitting designs, particularly larger trade sizes, may offer more than one tightening option including screwdriver (slot, Phillips, or Robertson-square drive) and bolt head for wrench application (hex or square). Greater mechanical advantage and torque can generally be achieved with a wrench. Where both screwdriver and wrench application options are offered, torque should be limited to that which can be applied by the screwdriver.

Compression type fittings are provided with gland nuts that, when wrench tightened, uniformly compress a split ring that secures the fitting to the conduit. It is not necessary to disassemble the fitting for installation. Simply loosen the gland nuts enough to slide the conduit past the gland ring all the way to the end stop. Hand-tighten the gland nut(s), then wrench tighten the nuts, again being careful not to exert excessive force. Generally, most compression gland nuts achieve maximum securement after 1 to 2 turns past the hand-tightened torque.

We advocate the use of torque indicating tools for assembly of Rigid Metal Conduit and IMC fittings. Care must be taken during the assembly of these fittings to provide adequate securement. Table 2-2 provides a complete reference to standard assembly torque for threadless fittings. If a manufacturer prescribes a tightening torque for a listed fitting other than that in the standard, that recommended assembly torque must be marked on installation instructions or on the smallest unit container in which the fitting is provided.

2.4.3 Concrete-Tight Type Fittings

Although threadless fittings marked "Concrete-tight" are not required to be taped prior to embedment in poured concrete, taping is recommended for all fittings which will be embedded more than 24 inches or where the pour area will be subjected to a concrete vibrator. To ensure secureness of the joint and continuous ground continuity, never tape the surface of the raceway where the fitting is to be installed. Taping is to be adequate to prevent the entrance of concrete aggregate into the raceway or box.

© Copyright 2003 by the National Electrical Manufacturers Association.

Copyright National Electrical Manufacturers Association
Provided by IHS under license with NEMA
No reproduction or networking permitted without license from IHS
Not for Resale

Concrete aggregate consists of cement combined with the inert material such as coarse sand. When hardened, such aggregate may be abrasive and might pose a risk to abrade conductor insulation or effectively reduce the area inside the raceway. Where Rigid/IMC fittings are installed in direct contact with earth, supplemental corrosion protection is recommended.

2.4.4 Threaded Fittings for Threaded Conduit

- Threaded connections are to be made up "wrench-tight"
- Keep threads clean and sharp prior to fitting assembly

Threads provided with Rigid and Intermediate Metal Conduit are taper-tapped (NPT). Threaded fittings conforming to NEMA Standard FB 1, *"Fittings, Cast Metal Boxes, and Conduit Bodies for Conduit and Cable Assemblies"* have tapered (NPT) internal threads to attach to conduit. Care should be taken to avoid cross threading when assembling conduit to the fittings. "Wrench-tight" implies that a tool is required to complete the assembly. In a taper-to-taper thread connection, the male threads of the conduit may not make their first engagement with the female threads of the fitting for the first couple of the fitting's threads. This is not critical as sufficient "perfect" threads are provided to assure a secure connection. In certain fittings, such as conduit bodies, all threads of the conduit may or may not be engaged by the fitting. Conduit bodies usually have a relief area in advance of an "integral bushing." It is a common misconception that this integral bushing is an end stop and that the conduit is to be forced to thread the entire length to the bushing. It is not necessary for the conduit to be inserted flush with this bushing (see Figure 2-2). Excessive force must be avoided when threading the conduit into threaded openings of fittings or enclosures. Generally, a force equivalent to hand-tight plus one to two full turns is recommended. Assure that at least five full threads are engaged. Factory threads provided with Rigid Metal Conduit and IMC are protected by a standard conduit coupling assembled on one end and a color-coded protective cap on the opposite end. These should not be removed until required to replace them with a fitting or another piece of equipment. Field cut threads must be kept clean and sharp to ensure ease of assembly into a fitting and a low resistance ground path.

2.5 ATTACHMENT TO BOXES AND SUPPORT

Section 300.18 [300-18] of the *National Electrical Code®* requires that a raceway be completely installed and supported before conductors are pulled into it. Likewise, when installing Rigid Metal Conduit or IMC to a box or enclosure the first section of conduit at the termination point shall be securely supported prior to termination using an appropriate fitting. The cantilever force resulting from an unsupported length of conduit can cause stress on both the fitting joint and the box knockout. Similarly, at coupling joints, both ends of the conduit to be coupled shall be supported prior to assembly of a threadless coupling.

Proper alignment of the raceway, fitting, and box knockout is important in assuring proper assembly and secure mechanical and electrical connections. When either connection point is misaligned, there is a strong likelihood that the conduit will not remain secure within a threadless fitting. Conduit and fittings manufacturers caution installers to be sure to allow sufficient length of conduit to enable complete engagement of the conduit and fittings at joints. As discussed earlier, this is critical in achieving the designed performance of this raceway and fitting system.

Where conduit locknuts are used to secure conduit in a knockout of a box or enclosure, thread the first locknut onto the conduit. Then, after insertion of the end of the conduit through the knockout, thread a second locknut onto the end of the conduit and secure both locknuts hand-tight plus 1/4 turn using an appropriate tool. A conduit bushing is required in this application to provide a smooth surface for conductor insulation. A conduit bushing is not intended as part of the raceway securement to the box. A locknut must always be assembled under each bushing.

NOTE–Locknuts are not to be relied upon to penetrate nonconductive coatings on enclosures. Such coatings are to be removed in the locknut area prior to raceway assembly to assure a continuous ground path is achieved.

--`,,`-`-`,,`,,`,`,,`---

© Copyright 2003 by the National Electrical Manufacturers Association.

Copyright National Electrical Manufacturers Association
Provided by IHS under license with NEMA
No reproduction or networking permitted without license from IHS Not for Resale

Fittings supplied with locknuts for attachment to a box or enclosure may be assembled first to either the conduit or the box. Attachment first to the conduit is the preferred method. A secure attachment to the box can be made when the locknut is hand tightened and then further tightened 1/4 turn using an appropriate tool. When securing the locknut, care is to be taken to avoid excessive pressure where gripping the body of the fitting is necessary.

The NEC, in Articles 342 [345] and 344 [346], requires support of Rigid and Intermediate Metal Conduit at intervals not exceeding 3 m (10 ft.) and within 900 mm (3 ft.) of every box, cabinet or fitting (refer to NEC® for exceptions). Support in this manner assures a minimum of strain will be placed on the conduit-fitting and fitting-box connections during wire pulling and throughout the lifetime of the installation. Rigid Metal Conduit and IMC must be supported at least at the frequency required by the NEC®, using raceway supports intended for the purpose secured by hardware acceptable to the local jurisdiction.

A variety of straps, clamps, and hangers are available, which are specifically intended to secure Rigid Metal Conduit and IMC. Raceway supports shall be installed only on conduit of the trade size indicated on the support or its smallest unit container. The variability of mounting surfaces, expected loads, and application environments will determine the appropriate support options and securement hardware. Design specifications usually calculate requirements based on maximum spacing intervals given in the NEC®. Closer support intervals than are required by the NEC® are an acceptable option to heavier supports and mounting hardware in some applications. Figure 2-3 contains examples of typical supports for rigid metal conduit and IMC.

2.6 ATTACHMENT TO THREADED ENTRIES

Threadless and threaded Rigid/IMC connectors provided with or without locknuts may be installed into threaded entries provided in certain boxes, enclosures and conduit bodies. Cast boxes and conduit bodies with threaded conduit entries or integral hubs, designed to the NEMA FB 1 Standard, *"Fittings, Cast Metal Boxes, and Conduit Bodies for Conduit and Cable Assemblies,"* have tapered threads (NPT). The external threads on Rigid/IMC fittings conforming to FB 1 have straight threads (NPS). If the fitting is to be installed in an enclosure that employs threads tapped all the way through (no integral bushing) care must be taken to ensure that a minimum of 3 threads of the connector are fully engaged with the threads of the conduit entry when wrench tightened. When a conduit entry of a box or enclosure employs an integral bushing care must be taken to ensure that 3 threads of the connector are fully engaged with the threads of the conduit entry when wrench tightened. If the specific box or enclosure has an environmental Type rating as described in NEMA 250, *"Enclosures for Electrical Equipment (1000 Volts Maximum),"* the fitting is expected to carry a similar or greater Type rating.

2.7 VERIFICATION OF INSTALLATION

Loosening and realignment of Rigid/IMC raceway components is sometimes encountered during the construction process. Once the raceway is fully installed and supported, and prior to wire pulling, all fittings and locknuts are to be re-examined for secureness. After wire pulling, a final continuity test is to be performed using any appropriate test equipment at each threadless connection over the entire length of the raceway, as a final means of inspection for secureness of all joints.

© Copyright 2003 by the National Electrical Manufacturers Association.

Copyright National Electrical Manufacturers Association
Provided by IHS under license with NEMA
No reproduction or networking permitted without license from IHS
Not for Resale

Table 2-1
NOMINAL TRADE SIZES AND METRIC DESIGNATORS FOR RIGID METAL CONDUIT AND IMC

Trade Size Designator	Metric Designator
1/2	16
3/4	21
1	27
1-1/4	35
1-1/2	41
2	53
2-1/2	63
3	78
3-1/2	91
4	103
5	129
6	155

Table 2-2
TIGHTENING TORQUE FOR RIGID AND IMC FITTINGS
(Torque applied to test assemblies of listed fittings[1])

	Size of Securement Means Torque: lb-in. (N·m)			Trade Size of Rigid/IMC Fittings						
	10	**12**	**1/4+**	**1/2**	**3/4**	**1**	**1¼**	**1½**	**2+**	**All**
Screws [2]	35 (3.96)	35 (3.96)	35 (3.96)							
Bolt Head Screws [3]		160 (18.1)	160 (18.1)							
Compression Gland Nut				300 (33.9)	500 (56.5)	700 (79.1)	1000 (113)	1200 (136)	1600 (181)	
Locknuts										Handtight +¼ turn
Other Threaded Connections				800 (90.4)	800 (90.4)	1000 (113)	1000 (113)	1000 (113)	1600 (181)	

[1] Test assemblies evaluated with alternative torque must be marked to indicate the manufacturer's recommended torque

[2] Screwdriver applied (e.g. slotted, Phillips, Robertson-square drive head or combinations)
Also includes bolt head screws having provision for tightening with a screwdriver.

[3] Usually square or hexagonal, without provision for tightening with a screwdriver.

© Copyright 2003 by the National Electrical Manufacturers Association.

Copyright National Electrical Manufacturers Association
Provided by IHS under license with NEMA
No reproduction or networking permitted without license from IHS
Not for Resale

THREADLESS

Set-Screw Type **Compression (Gland) Type**

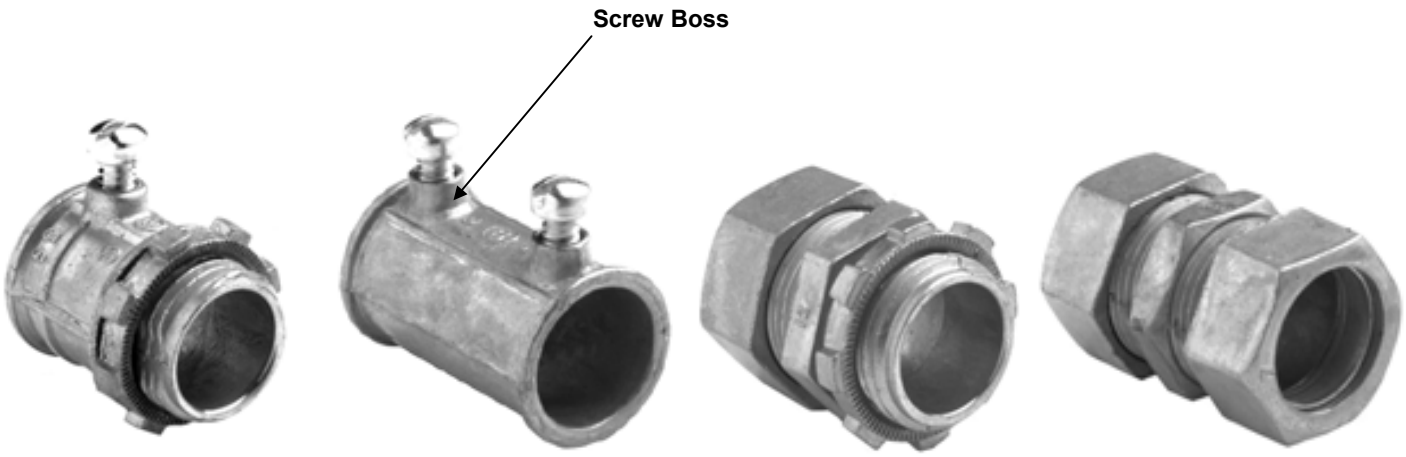

Connector **Coupling** **Connector** **Coupling**

THREADED



Rigid to FMC Coupling **Threaded Hub** **Rigid to EMT Coupling** **Insulated Bushing**

Figure 2-1
TYPICAL RIGID AND INTERMEDIATE METAL CONDUIT FITTING DESIGNS

© Copyright 2003 by the National Electrical Manufacturers Association.

Copyright National Electrical Manufacturers Association
Provided by IHS under license with NEMA
No reproduction or networking permitted without license from IHS Not for Resale



Pull Elbow
Rigid to Box



Conduit Body

Figure 2-1 (continued)
TYPICAL RIGID AND INTERMEDIATE METAL CONDUIT FITTING DESIGNS

--`,,`-`-`,,`,,`,`,,`---

© Copyright 2003 by the National Electrical Manufacturers Association.

Copyright National Electrical Manufacturers Association
Provided by IHS under license with NEMA
No reproduction or networking permitted without license from IHS

Not for Resale

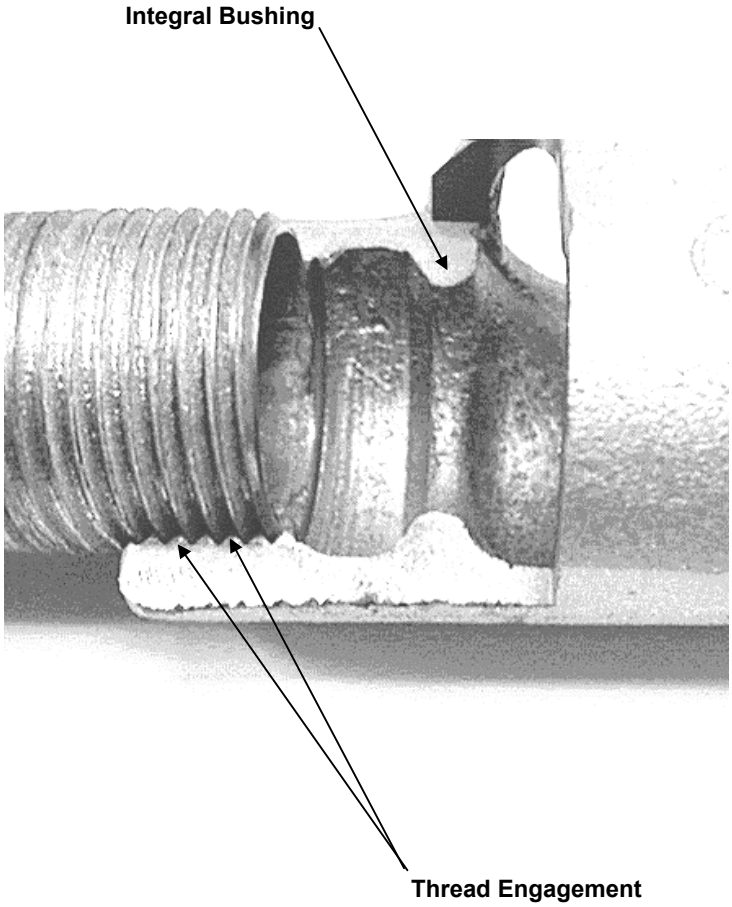

Figure 2-2
TYPICAL THREADED CONDUIT ENTRIES

© Copyright 2003 by the National Electrical Manufacturers Association.

Copyright National Electrical Manufacturers Association
Provided by IHS under license with NEMA
No reproduction or networking permitted without license from IHS
Not for Resale



1-Hole Strap



2-Hole Strap



Conduit Hanger

Figure 2-3
TYPICAL SUPPORTS FOR RIGID METAL CONDUIT/IMC

© Copyright 2003 by the National Electrical Manufacturers Association.

Copyright National Electrical Manufacturers Association
Provided by IHS under license with NEMA
No reproduction or networking permitted without license from IHS
Not for Resale

< This page is intentionally left blank. >

© Copyright 2003 by the National Electrical Manufacturers Association.

--```-`-`,,`,,`,`,,`---

Copyright National Electrical Manufacturers Association
Provided by IHS under license with NEMA
No reproduction or networking permitted without license from IHS

Not for Resale