ANSI/NEMA FB 1

Fittings, Cast Metal Boxes, and Conduit Bodies for Conduit, Electrical Metallic Tubing, and Cable

--`,,`-`-`,,`,,`,`,,`---

Copyright National Electrical Manufacturers Association
Provided by IHS under license with NEMA
No reproduction or networking permitted without license from IHS

Not for Resale

Copyright National Electrical Manufacturers Association
Provided by IHS under license with NEMA
No reproduction or networking permitted without license from IHS
Not for Resale

Approved as an American National Standard
ANSI Approval Date: June 4, 2003

NEMA Standards Publication FB 1-2003

Fittings, Cast Metal Boxes, and Conduit Bodies
for Conduit, Electrical Metallic Tubing, and Cable

Published by

National Electrical Manufacturers Association
1300 North 17th Street, Suite 1847
Rosslyn, VA 22209

www.nema.org

© Copyright 2003 by the National Electrical Manufacturers Association. All rights including translation into other languages, reserved under the Universal copyright Convention, the Berne Convention for the Protection of Literary and Artistic Works, and the International and Pan American Copyright Conventions.

--`,,`-`-`,,`,,`,`,,`---

Copyright National Electrical Manufacturers Association
Provided by IHS under license with NEMA
No reproduction or networking permitted without license from IHS

Not for Resale

NOTICE AND DISCLAIMER

The information in this publication was considered technically sound by the consensus of persons engaged in the development and approval of the document at the time it was developed. Consensus does not necessarily mean that there is unanimous agreement among every person participating in the development of this document.

The National Electrical Manufacturers Association (NEMA) standards and guideline publications, of which the document contained herein is one, are developed through a voluntary consensus standards development process. This process brings together volunteers and/or seeks out the views of persons who have an interest in the topic covered by this publication. While NEMA administers the process and establishes rules to promote fairness in the development of consensus, it does not write the document and it does not independently test, evaluate, or verify the accuracy or completeness of any information or the soundness of any judgments contained in its standards and guideline publications.

NEMA disclaims liability for any personal injury, property, or other damages of any nature whatsoever, whether special, indirect, consequential, or compensatory, directly or indirectly resulting from the publication, use of, application, or reliance on this document. NEMA disclaims and makes no guaranty or warranty, expressed or implied, as to the accuracy or completeness of any information published herein, and disclaims and makes no warranty that the information in this document will fulfill any of your particular purposes or needs. NEMA does not undertake to guarantee the performance of any individual manufacturer or seller's products or services by virtue of this standard or guide.

In publishing and making this document available, NEMA is not undertaking to render professional or other services for or on behalf of any person or entity, nor is NEMA undertaking to perform any duty owed by any person or entity to someone else. Anyone using this document should rely on his or her own independent judgment or, as appropriate, seek the advice of a competent professional in determining the exercise of reasonable care in any given circumstances. Information and other standards on the topic covered by this publication may be available from other sources, which the user may wish to consult for additional views or information not covered by this publication.

NEMA has no power, nor does it undertake to police or enforce compliance with the contents of this document. NEMA does not certify, test, or inspect products, designs, or installations for safety or health purposes. Any certification or other statement of compliance with any health or safety–related information in this document shall not be attributable to NEMA and is solely the responsibility of the certifier or maker of the statement.

--`,,`-`-`,,`,,`,`,,`---

Copyright National Electrical Manufacturers Association
Provided by IHS under license with NEMA
No reproduction or networking permitted without license from IHS Not for Resale

CONTENTS

Page

Foreword v

Section 1 GENERAL

1.1 Scope 1
1.2 Normative References 1
1.3 Units of Measurement 2
1.4 Definitions 3

Section 2 GENERAL REQUIREMENTS

2.1 General 5
2.1.1 Applicability 5
2.1.2 Assembly and Mechanical Protection 5
2.1.3 Materials 5
2.1.4 Thread Form and Dimensions 6
2.1.5 Resistance to Corrosion 6
2.1.6 Electrical Protection 6
2.1.7 Environmental Classifications 6
2.1.8 Marking 7
2.2 Fittings–General 7
2.2.1 Functionality 7
2.2.2 Wall Thickness 7
2.2.3 Connectors 7
2.2.4 Couplings 8
2.2.5 Thread Form and Dimensions 8
2.3 Cast Metal Boxes, Junction Boxes, Pull Boxes, and Conduit Bodies–General 8
2.3.1 Openings 8
2.3.2 Conduit Bodies Used as Fittings 8
2.3.3 Conduit Bodies Used as Boxes 8
2.3.4 Conduit Entries 8
2.3.5 Wall Thickness 9
2.3.6 Thread Form and Dimensions 9
2.3.7 Resistance to Corrosion 9

Section 3 SPECIFIC REQUIREMENTS

3.1 General 13
3.1.1 Applicability 13
3.1.2 Functionality 13
3.1.3 Offset and Angle Fittings 13
3.2 Fittings-Specific 13
3.2.1 Fittings for Threaded and Unthreaded Non-flexible Metal Circular Raceways 13
3.2.2 Fittings for Use with Flexible Metal Conduit 13
3.2.3 Fittings for Use with Armored Cable 13
3.2.4 Fittings for Use with Metal-Clad Cable 15
3.2.5 Fittings for Use with Mineral-Insulated Cable 15
3.2.6 Fittings for Use with Liquidtight Flexible Metal Conduit 15
3.2.7 Fittings for Use with Liquidtight Flexible Nonmetallic Conduit 16

© Copyright 2003 by the National Electrical Manufacturers Association.

Copyright National Electrical Manufacturers Association
Provided by IHS under license with NEMA
No reproduction or networking permitted without license from IHS
Not for Resale

Page

3.2.8 Locknuts Provided with Fittings 16
3.2.9 Conduit Locknuts 16
3.2.10 Bushings 17
3.2.11 Marking 17
3.2.12 Ground Clamps 17
3.2.13 Pulling, Strain Relief, and Support Grips 17
3.2.14 Reducing Washers 17
3.2.15 Service-Entrance Heads, Caps 17
3.2.16 Sill Plates 18
3.2.17 Bushings for Use in Metal Studs 18
3.2.18 Closure Plugs and Plates 18
3.3 Outlet Boxes, Conduit Bodies, Junction Boxes, Pull Boxes, and Covers–Specific 19
3.3.1 Marking 19
3.3.2 Cast Metal Outlet Boxes 19
3.3.3 Conduit Bodies 20
3.3.4 Dimensions 20

Section 4 DESIGN TESTS

4.1 General 29
4.1.1 Design Tests 29
4.1.2 Test Sampling 29
4.1.3 Nonmetallic Materials 29
4.2 Mechanical Protection 29
4.2.1 Assembly Test (2.1.2.2) 29
4.2.2 Rod Entry Test (2.2.3.6) 29
4.2.3 Mechanical Performance Testing Sequence 29
4.3 Electrical Protection 30
4.3.1 Fault Current Test (Clause 2.1.6.1) 30
4.3.2 Electrical Continuity Test (Clause 2.1.6.2) 30
4.4 Environmental Classification 30
4.4.1 Rain Test (2.1.7.1) 30
4.4.2 Concrete Test (2.1.7.2) 30
4.4.3 Oil Spray Test (2.1.7.3) 30
4.4.4 Type Rated Fittings and Boxes 30

Section 5 MANUFACTURING STANDARDS

5.1 Threads for Fittings, Cast Metal Boxes, and Conduit Bodies 31
5.1.1 Fittings and Conduit Entries with InternalTapered Threads 31
5.1.2 Fittings and Conduit Entries with Internal Straight Threads 31
5.1.3 Fittings and Conduit Entries with External Straight Threads 32
5.1.4 Fittings with External Tapered Threads 32
5.2 Knockout Dimensions 32
5.3 Dimensions of Flat Surfaces Surrounding Knockouts 32

© Copyright 2003 by the National Electrical Manufacturers Association.

Copyright National Electrical Manufacturers Association
Provided by IHS under license with NEMA
No reproduction or networking permitted without license from IHS
Not for Resale

TABLES

Table 1-1 TRADE SIZE AND METRIC DESIGNATORS 4

Table 2-1 STANDARD ASSEMBLY TORQUE VALUES FOR CONDUIT AND CABLE FITTINGS 10

Table 2-2 INSIDE DIAMETER OF THROATS AND END STOPS 10

Table 2-3 THICKNESS OF ZINC CORROSION PROTECTIVE COATING 11

Table 2-4 WALL THICKNESS OF FITTINGS 11

Table 2-5 METAL THICKNESS 11

Table 2-6 MINIMUM THREAD PROJECTION OF BOX CONNECTORS 12

Table 2-7 MINIMUM WALL THICKNESS AT TAPPED HOLES FOR CONDUIT 12

Table 3-1 DIAMETER OF PLUG GO-GAUGE 22

Table 3-2 RADIUS OF BEND OF ANGLE FITTINGS 22

Table 3-3 OUTSIDE DIAMETER OF FLEXIBLE METAL CONDUIT FITTING OF THE SCREW-IN TYPE 22

Table 3-4 ARMORED CABLE BUSHING DIMENSIONS 23

Table 3-5 DISTANCE FROM REMOVABLE COVER TO OPPOSITE WALL WITH RACEWAY OPENING 23

Table 5-1 NUMBER OF TURNS TO COMPLETELY DISENGAGE THE HAND-TIGHT NPT PLUG GAUGE FROM THE CONDUIT ENTRY 32

Table 5-2 GAGING REQUIREMENTS FOR INTERNAL STRAIGHT PIPE THREADS FOR CONDUIT FITTINGS HAVING SHORT THREADS ON BUSHINGS OR HUBS FOR USE WITH THREADED RIGID METAL CONDUIT, THREADED INTERMEDIATE METAL CONDUIT, OR OTHER ELECTRICAL FITTINGS HAVING TAPERED OR STRAIGHT EXTERNAL THREADS (CUT THREADS—FOR ORDINARY LOCATION APPLICATIONS ONLY) 33

Table 5-3 GAGING REQUIREMENTS FOR EXTERNAL TAPERED THREADS FOR CONDUIT FITTINGS FOR USE WITH THREADED RIGID METAL CONDUIT COUPLINGS, THREADED INTERMEDIATE METAL CONDUIT COUPLINGS, OR OTHER ELECTRICAL FITTINGS HAVING TAPERED OR STRAIGHT EXTERNAL THREADS (CUT THREADS—FOR ORDINARY LOCATION APPLICATIONS ONLY) 33

Table 5-4 COMPATIBILITY OF KNOCKOUT DIMENSIONS WITH LOCKNUTS, BUSHINGS, AND METAL CONDUIT (IMC OR RIGID) TO ASSURE COORDINATION 35

© Copyright 2003 by the National Electrical Manufacturers Association.

Copyright National Electrical Manufacturers Association
Provided by IHS under license with NEMA
No reproduction or networking permitted without license from IHS
Not for Resale

FIGURES

Figure 3-1 TANGENTIAL TYPE SCREW 24

Figure 3-2 RADIAL TYPE SCREW 24

Figure 3-3 BASIC DIMENSIONS OF INTERNAL STRAIGHT PIPE THREADS FOR LOCKNUTS FOR USE WITH ELECTRICAL CONNECTORS HAVING TYPE NPT SHORT TAPERED EXTERNAL THREADS OR TYPE NPSM STRAIGHT EXTERNAL THREADS 25

Figure 3-4 BASIC DIMENSIONS AND DIMENSIONS OF INTERNAL STRAIGHT PIPE THREADS FOR CONDUIT LOCKNUTS 26

Figure 3-5 CONFIGURATION OF SINGLE-GANG FS AND FD BOX FACE (also applicable to single-gang box faces on multi-gang boxes) 27

Figure 3-6 STRAIGHT PULL TYPE-C 28

Figure 3-7 ANGLE PULL ENTRY OPPOSITE REMOVABLE COVER TYPE-LB 28

Figure 5-1 FLAT SURFACES SURROUNDING KNOCKOUTS 34

--`,,`-`-`,,`,,`,`,,`---

© Copyright 2003 by the National Electrical Manufacturers Association.

Copyright National Electrical Manufacturers Association
Provided by IHS under license with NEMA
No reproduction or networking permitted without license from IHS

Not for Resale

Foreword

This Standards Publication provides practical information concerning construction, test, performance, and manufacture of fittings, cast metal boxes, and conduit bodies for conduit, tubing, and cable assemblies. This standard is intended for use by the electrical industry to provide guidelines for the manufacture and proper application of these products, and to promote the benefits of repetitive manufacture and widespread product availability.

One of the primary purposes of this Standards Publication is to encourage the manufacture and utilization of products, which, in themselves function in accordance with this standard. While some sections of this publication are intended to eliminate misunderstandings between manufacturers and users, all sections when applied properly, contribute to safety in one way or another.

The proper manufacture of fittings, cast metal boxes, and conduit bodies is however, only one consideration in promoting the safe use of electricity. Other safety considerations involve the joint efforts of the system designer, the various equipment manufacturers, the installer, and the user. Information is provided in this standard and in NEMA Standards Publications FB 2.10 and FB 2.20 to assist in proper selection and use.

The following factors are vital in a safe electrical system and should be considered by the user in the selection and application of equipment covered by the publication:

a. Environmental conditions
b. System design
c. Equipment selection and application
d. Installation
e. Operating practices
f. Maintenance

This Standards Publication has been promulgated with a view of promoting safety to persons and property when products conforming with it are selected, installed, and maintained in accordance with the National Electrical Code®.

NEMA Standards Publications are periodically reviewed to meet changing conditions and technical progress, and the latest edition shall be utilized. Comments from the users of this Standards Publication are welcome, and should be sent to:

Vice President, Engineering
National Electrical Manufacturers Association
1300 North 17th Street, Suite 1847
Rosslyn, VA 22209

At the time of publication, the member companies of the Conduit Fittings Section are as follows:

Adalet, A Scott & Fetzer Company—Cleveland, OH
AFC Cable Systems—New Bedford, MA
Arlington Industries, Inc.—Scranton, PA
Bridgeport Fittings, Inc. —Bridgeport, CT
Cooper B-Line—Highland, IL
Cooper Crouse-Hinds—Syracuse, NY
Emerson/EGS Electrical Group—Skokie, IL
ERICO, Inc.—Solon, OH
Hubbell Incorporated, Wiring Device-Kellems Division—Bridgeport, CT
IPEX Inc.—Mississauga, ON, Canada

© Copyright 2003 by the National Electrical Manufacturers Association.

Copyright National Electrical Manufacturers Association
Provided by IHS under license with NEMA
No reproduction or networking permitted without license from IHS
Not for Resale

Killark Electric Mfg. Company—St. Louis, MO
Lamson & Sessions, Carlon—Cleveland, OH
Minerallac Company—Addison, IL
Pass & Seymour/Legrand—Syracuse, NY
Producto Electric Corporation—Orangeburg, NY
Progressive Machine Die, Inc.—Macedonia, OH
RACO—South Bend, IN
Regal Manufacturing—Industry, CA
Steel City—Memphis, TN
Steel Electric Products Co., Inc.—Brooklyn, NY
Thomas & Betts Corporation—Memphis, TN

© Copyright 2003 by the National Electrical Manufacturers Association.

Copyright National Electrical Manufacturers Association
Provided by IHS under license with NEMA
No reproduction or networking permitted without license from IHS
Not for Resale

Section 1
GENERAL

1.1 SCOPE

This Standards Publication covers fittings that are a part of electrical raceway systems designed for use as intended by the requirements of the *National Electrical Code*®, NFPA 70. Specifically, this standard covers fittings for use with non-flexible tubular raceways – Rigid and Intermediate Metal Conduit, Electrical Metallic Tubing. Also included are fittings for use with flexible conduit and cable raceways including Flexible Metal Conduit, Armored Cable, Metal Clad Cable, Tray Cable, Mineral Insulated Cable, Flexible Cord, Nonmetallic Sheathed Cable, and Service Entrance Cable.

This standard also includes: cast metal Outlet Boxes and Conduit Bodies and covers that, when designed for the purpose, serve as a box intended to house conductor splices and/or wiring devices; and cast metal Junction Boxes, Pull Boxes, and covers.

This standard does not include standard conduit couplings of the type provided with lengths of Rigid and Intermediate Metal Conduit, or threaded conduit nipples, or threaded or unthreaded factory made bends derived from Rigid and Intermediate Metal Conduit or Electrical Metallic Tubing.

This standard does not apply to boxes or enclosures or explosion-proof and dust-ignition proof fittings specifically designed for use in hazardous (classified) locations. Exceptions are those ordinary location fittings and enclosures which are specifically permitted by the *National Electrical Code*® in Class I, Division 2, and Class II and III Hazardous (classified) locations.

1.2 NORMATIVE REFERENCES

Unless otherwise stated, references are to the latest edition of the standard.

American National Standards Institute (ANSI)
11 West 42nd Street, 13th Floor
New York, NY 10036

ANSI C80.1	*Specification for Zinc Coated Rigid Steel Conduit*
ANSI C80.3	*Steel Electrical Metallic Tubing*
ANSI C80.5	*Electrical Rigid Aluminum Conduit*
ANSI C80.6	*Electrical Intermediate Metal Conduit*

American Society of Mechanical Engineers (ASME) International
Three Park Avenue
New York, NY 10016-5990

ANSI/ASME B1.20.1	*Pipe Threads, General Purpose, Inch*

American Society for Testing and Materials (ASTM)
100 Barr Harbor Drive
West Conshohoken, PA 19428-2959

ASTM B 86	*Specification for Zinc and Zinc-Aluminum Alloy Foundry and Die Castings*

© Copyright 2003 by the National Electrical Manufacturers Association.

Copyright National Electrical Manufacturers Association
Provided by IHS under license with NEMA
No reproduction or networking permitted without license from IHS
Not for Resale

National Electrical Manufacturers Association (NEMA)
1300 North 17th Street, Suite 1847
Rosslyn, VA 22209-3081

NEMA 250	*Enclosures for Electrical Equipment (1000 V Maximum)*
NEMA FB 2.10	*Selection and Installation Guidelines for Fittings for Use with Non-Flexible Conduit and Tubing*
NEMA FB 2.20	*Selection and Installation Guidelines for Fittings for Use with Flexible Conduit, Tubing, and Cable*
NEMA OS 1	*Sheet-Steel Outlet Boxes, Device Boxes, Covers and Box Supports*
NEMA WD 6	*Wiring Devices – Dimensional Requirements*

National Fire Protection Association (NFPA)
1 Batterymarch Park, P.O. Box 9101
Quincy, MA 02269-9101

NFPA 70-2002	*National Electrical Code*®

Institute of Electrical and Electronic Engineers (IEEE)
445 Hoes Lane, P.O. Box 1331
Piscataway, NJ 08855-1331

IEEE 268	*Standard for Use of the International System of Units (SI): The Modern Metric System*

Underwriters Laboratories Inc.
333 Pfingsten Road
Northbrook, IL 60062-2096

UL 6	*Standard for Rigid Metal Conduit*
UL 467	*Standard for Grounding and Bonding*
UL 514A	*Standard for Metallic Outlet Boxes*
UL 514B	*Standard for Fittings for Conduit and Outlet Boxes*
UL 514C	*Standard for Nonmetallic Outlet Boxes*
UL 514D	*Standard for Flush Device Cover Plates*
UL 797	*Standard for Electrical Metallic Tubing*
UL 1242	*Standard for Intermediate Metallic Conduit*

1.3 UNITS OF MEASUREMENT

The primary units of measure in this Standards Publication are based on SI metric units in accordance with the American National Standard for metric practice, ANSI/IEEE Standard 268, *Standard for Use of the International System of Units (SI): The Modern Metric System*. SI metric units are followed by their Imperial inch-pound equivalent in parentheses, with the exception of trade sizes of conduit, tubing or cable, thread dimensions or conductor sizes, in which case, the inch-pound unit appears first. In general, the metric conversions are "soft" representing rounded approximation of the inch-pound measure. When two values are shown, the first stated value is the requirement. For the term of this edition of the standard, the SI metric units are recommendations for future design where current designs may vary as a result of the adoption of the soft metric conversion.

No SI metric units should be assigned to trade sizes of conduit, tubing or cable, thread dimensions, or conductor sizes. Metric Designators have been adopted that directly correspond to traditional trades sizes (Example: 1/2 (16)). The use of these Metric Designators in conjunction with, but not replacing, traditional trades sizes, is a recommendation for future design. See Table 1-1 for Metric Designators corresponding to traditional trade sizes.

NOTE–Metric designators and trade sizes are for identification purposes only and do not relate to actual dimensions.

© Copyright 2003 by the National Electrical Manufacturers Association.

Copyright National Electrical Manufacturers Association
Provided by IHS under license with NEMA
No reproduction or networking permitted without license from IHS Not for Resale

1.4 DEFINITIONS

angle fitting: A fitting, such as an elbow or offset fitting, with or without a removable cover (or cap) intended to change the direction of the raceway.

box, FS or FD: A cast metal box having internal or external hubs or pads for drilling or tapping for attachment to conduit or cable assemblies. The box is designed to accommodate single strap wiring devices and can be used as a pull or junction box. The box is designed for surface mounting in single or multiple gang.

box, junction: A box with a cover; it joins different runs of raceways or cables, or both, and provides space for the connection and branching of the enclosed conductors. There are no openings in the cover.

box, outlet: A box used in an electrical wiring system for containing wire, splices, or devices. It has provisions for the entry of conduit or cable assemblies and for the attachment of a separate cover, which is used to close the box or provide support for devices or fixtures.

box, pull: A box with a cover that is installed in one or more runs of raceway to facilitate pulling the conductors through the conduit system. Some fittings also meet the definition of a pull box.

bushing: A fitting, or a component of a fitting such as a throat liner, intended to prevent damage to the conductor insulation by providing a smooth well-rounded surface over which the conductor is pulled and on which it bears while it is in service.

bushing, grounding and bonding: A fitting that provides a means for the reliable connection of a grounding or bonding conductor.

bushing, integral: A design feature within a conduit or raceway entry providing a smooth, well-rounded surface over which the conductors are pulled and will bear in service. Not necessarily intended as an end stop.

bushing, insulating: A bushing of polymeric construction or provided with a polymeric insulator provided to protect wires from abrasion and intended for use where conductors enter or leave the raceway system.

bushing, metal stud: A fitting provided to protect the outer jacket of a cable from sharp edges in cut or punched holes in metal studs into which cables are fished or supported.

connector: A fitting intended to terminate conduit, cable, cord or tubing to a box or similar device.

coupling: A fitting intended to join two lengths of raceway.

conduit body: A fitting that provides a means for access to the interior of a conduit or tubing system through one or more removable covers at a junction of two or more conduit or tubing sections or at the terminal point of a conduit or tubing. A conduit body may also meet the definition of a box.

conduit body, short-radius: A capped elbow or service entrance elbow.

expansion fitting: A fitting intended to compensate for linear expansion of a span of rigid metal conduit, intermediate metal conduit, or electrical metallic tubing.

fitting: A means for securing conduit, cable, cord, or tubing to an enclosure, box or raceway system.

fitting, concrete-tight type: A fitting that excludes concrete aggregate (Portland-type cement and sand).

© Copyright 2003 by the National Electrical Manufacturers Association.

Copyright National Electrical Manufacturers Association
Provided by IHS under license with NEMA
No reproduction or networking permitted without license from IHS
Not for Resale

fitting, liquidtight type: A fitting intended for use in wet industrial environments that contain machine oils and coolants.

fitting, rain-tight type: A fitting intended for use outdoors where subject to beating rain or indoors in wet and damp locations where not subject to machine oils or coolants.

fitting, threadless: A fitting intended for use with non-threaded metal conduit or tubing.

locknut, conduit: An internally threaded fitting for use on externally threaded rigid metal conduit or intermediate metal conduit intended to inhibit turning and to provide a secure electrical and mechanical attachment of the conduit to an unthreaded opening in a box or enclosure.

locknut, fitting: A component of a connector intended to inhibit turning and to provide a secure electrical and mechanical attachment of the fitting to an unthreaded opening in a box or enclosure.

service-entrance head: An enclosed fitting intended for use at service entrances where a service drop is connected to a service-entrance cable or raceway system.

sill plate: A shield that protects a service entry into a building or structure.

Table 1-1
TRADE SIZE AND METRIC DESIGNATORS

Trade Size	Metric Designator
3/8	12
1/2	16
3/4	21
1	27
1-1/4	35
1-1/2	41
2	53
2-1/2	63
3	78
3-1/2	91
4	103
5	129
6	155

© Copyright 2003 by the National Electrical Manufacturers Association.

Copyright National Electrical Manufacturers Association
Provided by IHS under license with NEMA
No reproduction or networking permitted without license from IHS
Not for Resale

Section 2
GENERAL REQUIREMENTS

2.1 GENERAL

2.1.1 Applicability

The requirements in Section 2 apply to all fittings or major categories of fittings, or cast metal boxes as indicated, unless supplemented or superceded by the requirements for specific types of fittings or boxes in Section 3.

2.1.2 Assembly and Mechanical Protection

2.1.2.1 A fitting or a cast metal box shall be constructed so that it is able to be assembled to the raceway as intended and withstand the forces likely to be imposed upon it during the construction process, normal use, and system maintenance. The fitting or cast metal box shall provide mechanical protection for electrical conductors during and after the installation and a point of support for a raceway at its entry.

2.1.2.2 A fitting or an entry in a cast metal box when assembled as intended to a raceway shall not damage the raceway or decrease the internal diameter of a circular raceway by greater than 15%. The fitting or box entry shall not crack or break, and a securement screw or nut shall not strip when the torque specified in Table 2-1 is applied.

2.1.2.3 A part of a fitting or an entry in a cast metal box that is able to contact an insulated conductor shall be smooth and rounded.

2.1.2.4 A fitting or an entry in a cast metal box for use with conduit or tubing shall have a smooth rounded inlet hole and throat. The throat diameter shall be as specified in Table 2-2.

2.1.2.5 A fitting or a threadless entry in a cast metal box for use with non-flexible metal conduit, or tubing, other than a coupling or locknut, shall be provided with a positive end stop. The throat shall be continuous around the circumference of the fitting and have a diameter as specified in Table 2-2.

2.1.3 Materials

2.1.3.1 Zinc die-castings

Zinc die-castings shall meet the minimum requirements for die-castings AG40A and AC41A in ASTM B86.

2.1.3.2 Aluminum castings

Aluminum castings shall have no more than 0.4 percent copper content.

2.1.3.3 Resistance to Heat

A nonmetallic fitting or a nonmetallic component of a fitting shall perform as intended when exposed to tests that simulate the long term effects of service at the maximum temperature to which it is likely to be exposed in its intended operating environment.

2.1.3.4 Resistance to Flame Propagation

A nonmetallic fitting or nonmetallic component of a fitting shall have resistance to the propagation of flame.

© Copyright 2003 by the National Electrical Manufacturers Association.

Copyright National Electrical Manufacturers Association
Provided by IHS under license with NEMA
No reproduction or networking permitted without license from IHS
Not for Resale

2.1.4 Thread Form and Dimensions

The standard thread form and dimensions of threads for a fitting or an entry in a cast metal box shall be as specified in Section 5.

2.1.5 Resistance to Corrosion

2.1.5.1 A ferrous metal box, ferrous metal fitting or a ferrous metal component of a fitting shall be provided with a corrosion protective coating of zinc or an equivalent. The minimum thickness of a zinc coating shall be as specified in Table 2-3. Compliance is to be checked by any convenient means (electronic, chemical, magnetic, or electro-mechanical).

NOTE–Most non-ferrous materials such as copper, zinc, aluminum, and other alloys are generally suitable for indoor and outdoor applications without the need for a protective coating.

2.1.5.2 A fitting or component constructed of stainless steel having a minimum of 16% chromium content, and cut edges including punched or threaded holes of a fitting, need not be so protected.

2.1.5.3 Nonconductive coatings such as paints, enamels, and similar coatings shall not be applied to boxes or fittings at threads, contact points, or contact surfaces unless the coatings are removed with the installation of the fittings or the fittings are so designed as to make such removal unnecessary. Conductive coatings applied to boxes or fittings at threads, contact points, or contact surfaces shall not prevent compliance with the electrical continuity test in 4.3.2.

2.1.6 Electrical Protection

2.1.6.1 A fitting or a cast metal box, when assembled to a raceway as intended, shall function as part of the system to which it is installed to provide the necessary degree of protection to the system, property and equipment resulting from an electrical fault.

2.1.6.2 A fitting or cast metal box, when installed as intended, shall provide protection to personnel from electric shock resulting from contact with live conductors which are part of a wiring system or cable assembly, or exposed parts of the fitting or box likely to become energized in the event of a conductor fault. A metal fitting or cast metal box intended for use with a metal raceway shall provide electrical continuity when tested as described in 4.3.2.

2.1.6.3 A provision for attachment of a grounding or bonding conductor that is supplied as an integral component of a fitting, such as a bushing or a locknut, shall comply with the applicable requirements of ANSI/UL 467.

2.1.7 Environmental Classifications

2.1.7.1 A fitting or cast metal box intended for use in wet locations shall provide a degree of resistance to the ingress of water such as pouring rain. A fitting or cast metal box acceptable for use in wet locations is also suitable for use embedded in poured concrete.

2.1.7.2 A fitting or cast metal box intended for embedment in poured concrete shall, when installed as intended prohibit the ingress of concrete aggregate into the raceway or enclosure during the construction process. Instructions provided for taping the joint interfaces is a means for compliance (see 2.1.8.3).

NOTE–Concrete aggregate consists of cement combined with the inert material such as coarse sand that comprises cement.

2.1.7.3 A fitting intended for use in wet industrial environments that may be subject to machine oils and coolants during normal use shall have a degree of resistance to the ingress of spraying liquids containing water based machine oil. A fitting for use in wet locations, 2.1.7.1, does not comply with this requirement. However, a fitting meeting the requirements of 2.1.7.3 complies with the requirements of 2.1.7.1 and 2.1.7.2.

© Copyright 2003 by the National Electrical Manufacturers Association.

Copyright National Electrical Manufacturers Association
Provided by IHS under license with NEMA
No reproduction or networking permitted without license from IHS
Not for Resale

2.1.7.4 A fitting or cast metal box intended for use in an application that requires special rating in accordance with NEMA 250, *Enclosures for Electrical Equipment (1000 V Max.)* shall comply with the specific requirements in the NEMA 250 standard in addition to the applicable requirements in this standard.

2.1.8 Marking

2.1.8.1 Unless otherwise stated, a fitting or cast metal box shall be marked in accordance with the applicable requirements in UL 514B.

2.1.8.2 A fitting or cast metal box shall be legibly marked with the name or trademark of the manufacturer. If the catalog number or an equivalent designation is not marked on the fitting or cast metal box, it shall appear on the smallest shipping container in which the product is packaged.

2.1.8.3 Other information

The following information shall be provided on the fitting or cast metal box, the smallest shipping container, or an instruction sheet:

a. Permissive or restrictive information to designate the intended use of the product.

b. Installation instructions for products requiring unique installation techniques including specific identification of components needed that are not supplied with the product.

2.2 FITTINGS—GENERAL

2.2.1 Functionality

A fitting intended to accommodate more than one raceway type, or a range of raceway sizes shall meet all of the requirements for each raceway type and for the smallest and largest size of each raceway in the intended range.

2.2.2 Wall Thickness

2.2.2.1 The wall thickness of metallic fittings shall not be less than that specified in Table 2-4 when measured at least 3.2 mm (1/8 inch) from the edge of the fitting. If a taper is provided to permit easy withdrawal of the part from the die, the thickness shall not be less than that required at the base of threads when measured 0.8 mm (1/32 inch) from the edge of the fitting.

2.2.2.2 A fitting for electrical metallic tubing, flexible conduit, armored cable, or nonmetallic-sheathed cable constructed of die-cast zinc shall be permitted to have a wall thickness of less than 1.6 mm (1/16 inch) but not less than 1.2 mm (3/64 inch) if it is ribbed or otherwise reinforced and complies with 2.1.2.2.

2.2.3 Connectors

2.2.3.1 Fittings which are intended to connect to an unthreaded opening in a metal box or enclosure shall provide reliable mechanical and electrical connection, in accordance with 2.1.2 and 2.1.6, when assembled to various types, and thickness of metal representing the range of boxes and enclosures. The range of metal thickness is specified in Table 2-5.

2.2.3.2 Fittings that are intended to connect to an unthreaded opening in a box or enclosure shall be provided with a securement means. A fitting provided with a locknut shall have a thread projection, when measured from the shoulder stop to the end of the threads along the major axis of the threaded projection, not less than specified in Table 2-6.

2.2.3.3 A connector with external taper threads need not be provided with a locknut. The thread projection, when measured from the shoulder stop to the end of the threads along the major axis of the threaded projection, shall be not less than that specified in Table 2-6.

© Copyright 2003 by the National Electrical Manufacturers Association.

Copyright National Electrical Manufacturers Association
Provided by IHS under license with NEMA
No reproduction or networking permitted without license from IHS
Not for Resale

NOTE–Consideration should be given to longer thread lengths if the connector is to be used in threaded openings or with locknuts and bushings.

2.2.3.4 A connector with non-interchangeable internal threads, which utilizes a male bushing to secure the connector to the box or enclosure, shall be provided with the bushing.

2.2.3.5 A connector, or conduit locknut shall substantially close the opening in a box or enclosure with which it is intended to be used when the raceway is secured in place. Compliance is checked using a 4.8 mm (3/16 in.) diameter probe. See Table 5-4.

2.2.3.6 A locknut that is supplied as part of a fitting assembly shall be evaluated with the fitting with which it is supplied.

2.2.4 Couplings

2.2.4.1 A coupling for use with unthreaded non-flexible metal conduit, or tubing shall have a centering stop with an effective diameter no less than the minimum throat diameter indicated in Table 2-2 for the type and the smallest size of raceway intended to be accommodated.

2.2.5 Thread Form and Dimensions

2.2.5.1 External threads on fittings shall be either tapered or straight and shall conform to the dimensions specified in Section 5.

2.2.5.2 Internal threads tapped in a threaded conduit entry in a fitting, such as a threaded reducer or a non-integral hub, shall comply with 2.3.4.1 or shall have a tapered female thread or other suitable end stop for the conduit. Where an end stop is provided, it shall meet the requirements in 2.1.2.4.

2.3 CAST METAL BOXES, JUNCTION BOXES, PULL BOXES, AND CONDUIT BODIES—GENERAL

2.3.1 Openings

Cast metal outlet boxes, conduit bodies, junction boxes, and pull boxes, when assembled as intended with appropriate covers, shall have no substantial openings.

2.3.2 Conduit Bodies Used as Fittings

A CONDUIT BODY, when intended for use solely as a fitting and not as a pull box, junction box, or a device box, shall comply with the requirements for a fitting.

2.3.3 Conduit Bodies Used as Boxes

A conduit body, when intended for use as a pull box, junction box, or a device box, shall comply with both the requirements for a fitting and for the type of box for which it is intended to be used.

2.3.4 Conduit Entries

2.3.4.1 Threaded Entry Construction

A threaded conduit entry shall conform to either 2.3.4.1.1 or 2.3.4.1.2. The entry shall contain at least three full threads that comply with the requirements in 2.3.6.

2.3.4.1.1 Threaded Entry Construction-Through Tapped Holes

A threaded hole for connection to conduit that is tapped completely through the wall of a box shall permit proper attachment of a conduit bushing to wrench-tightened conduit. The box shall have a wall thickness in an area where tapped holes are provided or intended for field drilling and tapping that complies with Table 2-7.

NOTE–For field-threading, standard NPT taps and chasers are recommended.

© Copyright 2003 by the National Electrical Manufacturers Association.

Copyright National Electrical Manufacturers Association
Provided by IHS under license with NEMA
No reproduction or networking permitted without license from IHS
Not for Resale

2.3.4.1.2 Entries with Integral Bushings

An integral bushing provided in a threaded entry shall comply with the requirements for end stops in 2.1.2.4. An internal recess shall be permitted between the integral bushing and the threaded portion of the entry.

NOTE–This type of entry may be configured as an integral hub, either external or internal, or as a thick-walled entry.

2.3.4.2 An entry into a cast metal outlet box, junction box, pull box, or conduit body intended for connection to threadless rigid metal conduit, threadless intermediate metal conduit, or electrical metallic tubing shall comply with the requirements in 3.2.1.

2.3.5 Wall Thickness

Except as otherwise stated, a cast metal box and conduit body intended for use as a box, shall have a wall thickness not less than 3.2 mm (1/8 in.). The wall of a pull box or junction box, or a conduit body not intended to house a wiring device, constructed of malleable-iron, die-cast or permanent-mold-cast aluminum, brass, bronze, or zinc, shall have a wall thickness not less than 2.4 mm (3/32 inch). The wall thickness shall not be less than 1.6 mm (1/16 in.) for those areas of pull or junction boxes not exceeding 0.185 square meters (24 square in.) or 152.4 mm (6 in.) in any dimension.

EXCEPTION–Listed cast metal boxes and conduit bodies shown to have equivalent strength and characteristics shall be permitted to be made of thinner or other metals.

2.3.6 Thread Form and Dimensions

The internal threads tapped in a cast metal outlet box, conduit body, junction box, and pull box for connection of a threaded raceway or fitting shall comply with the applicable requirements in Section 5.

2.3.7 Resistance to Corrosion

2.3.7.1 The outside of a cast aluminum box that is intended for use in concrete or cinder fill shall be coated with asphalt-base paint, two coats of baked enamel, or the equivalent.

2.3.7.2 Unless it is obvious that one surface of a cover is intended for use only on the side toward the interior, both surfaces shall be provided with corrosion protection as required for exterior surfaces.

© Copyright 2003 by the National Electrical Manufacturers Association.

Copyright National Electrical Manufacturers Association
Provided by IHS under license with NEMA
No reproduction or networking permitted without license from IHS
Not for Resale

Table 2-1
STANDARD ASSEMBLY TORQUE VALUES FOR CONDUIT AND CABLE FITTINGS

Securement Means	Size of Securement Means Torque: N·m (lb-in.)					Trade Size of Fittings Torque: N·m (lb-in.)						
	6	8	10	12	1/4+	3/8 (12)	1/2 (16)	3/4 (21)	1 (27)	1¼ (35)	1½ (41)	2+ (53+)
Screws [1]	1.38 (12)	2.26 (20)	3.96 (35)	3.96 (35)	3.96 (35)							
Bolt Head Screws [2]				18.1 (160)	18.1 (160)							
Compression Gland Nut[3]						22.6 (200)	33.9 (300)	56.5 (500)	79.1 (700)	113 (1000)	136 (1200)	181 (1600)
Locknuts						Handtight +¼ turn						

NOTE–Test assemblies evaluated with alternative torque must be marked to indicate the manufacturer's recommended torque.

[1] Screwdriver applied (e.g. slotted, Phillips, Robertson-square drive head or combinations). Also includes bolt-head screws having provision for tightening with a screwdriver

[2] Usually square or hexagonal, without provision for tightening with a screwdriver

[3] Also applies to other wrench applied parts

Table 2-2
INSIDE DIAMETER OF THROATS AND END STOPS FOR FITTINGS AND BUSHINGS

Trade Size	Metric Designator	EMT, IMC, Rigid, MC Inside Diameter Throats/End Stops				Flexible Metal Conduit Inside Diameter Throats/End Stops			
		Minimum		Maximum		Minimum		Maximum	
		mm	inch	mm	inch	mm	inch	mm	inch
5/16						6.76	(0.266)	7.95	(0.313)
3/8	(12)	11.28	(0.444)	12.52	(0.493)	8.10	(0.319)	9.53	(0.375)
1/2	(16)	14.22	(0.560)	15.80	(0.622)	13.49	(0.531)	15.88	(0.625)
3/4	(21)	18.85	(0.742)	20.93	(0.824)	17.55	(0.691)	20.65	(0.813)
1	(27)	23.98	(0.944)	26.64	(1.049)	21.59	(0.850)	25.40	(1.000)
1-1/4	(35)	31.55	(1.242)	35.05	(1.380)	27.00	(1.063)	31.75	(1.250)
1-1/2	(41)	36.80	(1.449)	40.98	(1.610)	32.39	(1.275)	38.10	(1.500)
2	53)	47.24	(1.860)	52.50	(2.067)	43.18	(1.700)	50.80	(2.000)
2-1/2	(63)	56.44	(2.222)	62.71	(2.469)	53.98	(2.125)	63.50	(2.500)
		(1) 56.44	(2.222)*	(1) 69.37	(2.731)				
3	(78)	70.13	(2.761)	77.92	(3.068)	64.77	(2.550)	76.20	(3.000)
		(1) 70.13	(2.761)*	(1) 85.24	(3.356)				
3-1/2	(91)	81.10	(3.193)	90.12	(3.548)	75.57	(2.975)	88.90	(3.500)
		(1) 81.10	(3.193)*	(1) 97.38	(3.834)				
4	(103)	92.02	(3.623)	102.26	(4.026)	86.36	(3.400)	101.60	(4.000)
		(1) 92.02	(3.623)*	(1) 110.18	(4.334)				
5	(129)	115.37	(4.542)	128.19	(5.047)				
6	(155)	138.63	(5.458)	154.05	(6.065)				

* A reduced diameter under the threaded portion of the fitting shall not result in a sudden reduction in the inside diameter of the tubing.
(1) EMT Fittings Only

© Copyright 2003 by the National Electrical Manufacturers Association.

Copyright National Electrical Manufacturers Association
Provided by IHS under license with NEMA
No reproduction or networking permitted without license from IHS
Not for Resale

Table 2-3
THICKNESS OF ZINC CORROSION PROTECTIVE COATING

Type of fittings and material	Thickness of plating, mm (inch)	
	Average[§]	Minimum
Fitting parts, locknuts or clamps intended for assembly inside a box	0.0038 (0.00015)	0.0025 (0.0001)
Outside of a sheet-steel or a machine-steel coupling, connector, bushing, reducing washer, or conduit locknut	0.0127 (0.0005)	0.0102 (0.0004)
Inside a sheet-steel or machined-steel fitting	[a]	[a]
Malleable or cast-iron boxes, covers and fittings	[a]	[a]
Screws	[a]	[a]
Sand-cast aluminum, steel, bronze, or cast iron	0.025 (0.001)	0.0202 (0.0008)

§ The average thickness shall be determined by the averaging of a minimum of three readings, on three different surfaces, if possible. If the readings are taken from the same surface, then the locations at which these readings are taken shall be equally spaced along that surface.

[a] The minimum thickness of plating for these areas is not specified, but the presence of a plating is to be determined by visual inspection.

Table 2-4
WALL THICKNESS OF FITTINGS

Material of Fitting	Minimum wall thickness of Unthreaded parts, mm (inches)	Minimum thickness at base of threads, mm (inches)
Sheet steel or machine steel	0.635 (0.0250)	0.635 (0.0250)* 0.508 (0.020)**
Sheet aluminum	0.79 (0.031)	0.79 (0.031)
Die-cast aluminum, die-cast zinc or Malleable iron	1.6 (1/16) †	0.8 (1/32)
Sand-cast aluminum, steel, Bronze, or cast iron	3.2 (1/8)	2.4 (3/32) †† 1.6 (1/16) ‡

* At the base of cut threads.

** At the base of rolled threads.

† See Clause 2.2.2.2

†† At the base of threads in fittings of the 1 (27) and larger trade sizes.

‡ At the base of threads in fittings of the 3/4 (21) and smaller trade sizes.

Table 2-5
METAL THICKNESS

Conduit trade size	Metric Designator	Metal thickness, mm (inch)
3/8 through 1-1/4	(12 – 35)	0.660–2.311 (0.026–0.091)
1-1/2, 2	(41 – 53)	0.813–2.311 (0.032–0.091)
2-1/2 through 6	(63 – 155)	0.813–3.886 (0.032–0.153)

© Copyright 2003 by the National Electrical Manufacturers Association.

Copyright National Electrical Manufacturers Association
Provided by IHS under license with NEMA
No reproduction or networking permitted without license from IHS
Not for Resale

Table 2-6
MINIMUM THREAD PROJECTION OF BOX CONNECTORS

Trade Size	Metric Designator	Minimum Thread projection mm (inch)
3/8	12	7.59 (0.299)
1/2	16	8.20 (0.323)
3/4	21	8.59 (0.338)
1	27	9.93 (0.391)
1-1/4	35	9.93 (0.391)
1-1/2	41	9.93 (0.391)
2	53	10.36 (0.408)
2-1/2	63	16.61(0.654)
3	78	16.61(0.654)
3-1/2	91	18.21(0.717)
4	103	18.21(0.717)
5	129	19.79(0.779)
6	155	21.36(0.841)

Table 2-7
MINIMUM WALL THICKNESS AT TAPPED HOLES FOR CONDUIT

Conduit Trade Size	Metric Designator	Minimum Thickness, mm (Inch)
1/2 – 3/4	16 – 21	6.35 (1/4)
1 – 2	27 – 53	6.75 (17/64)
2-1/2 – 6	63 – 155	9.53 (3/8)

© Copyright 2003 by the National Electrical Manufacturers Association.

Copyright National Electrical Manufacturers Association
Provided by IHS under license with NEMA
No reproduction or networking permitted without license from IHS
Not for Resale

Section 3
SPECIFIC REQUIREMENTS

3.1 GENERAL

3.1.1 Applicability

The requirements in Section 3 are specific to particular Cast Metal Boxes or fittings for use with particular raceways or wiring systems. The requirements in Section 2 apply to all applicable products unless supplemented or modified by the requirements in Section 3.

3.1.2 Functionality

A fitting intended to be used with more than one type or size of raceway or wiring system shall comply with each of the requirements for each type and size of raceway or wiring system intended.

3.1.3 Offset and Angle Fittings

3.1.3.1 An offset fitting, that is intended to change the position of the axis of a raceway system, shall have a removable cap or cover to facilitate the installation of wire when the offset is greater than 25.4 mm (1 in.) or if the axis of the offsetting section is at any angle greater than 35 degrees from the axis of the raceway. Except as covered in 3.1.3.2, the minimum radius of bend shall be as specified in Table 3-2.

3.1.3.2 An angle fitting described in 3.1.3.1, having a radius of bend less than that specified in Table 3-2 for the trade size of raceway for which the fitting is intended, shall have a removable cap or cover to facilitate the installation of wires. The fitting shall be so designed so that wire insulation will not be damaged during wire pulling. Compliance is to be determined by the Wire Pull Test in UL 514B.

This requirement does not apply to a fitting for use with liquid-tight flexible conduit, flexible cord, or to an elbow intended to be used as a connector, that changes the direction of the wires entering it not more than 90 degrees, and, is secured to the raceway system by means other than turning.

3.1.3.3 Fittings, such as angle connectors, offset nipples, elbows, and so forth, which change the direction of a raceway or cable assembly shall have an internal cross-sectional area at all points not less than 80 percent of that provided by a bushing having a minimum throat diameter in accordance with Table 2-2.

3.2 FITTINGS–SPECIFIC

3.2.1 Fittings for Threaded and Unthreaded Non-flexible Metal Circular Raceways (Rigid and Intermediate Metal Conduit, and Electrical Metallic Tubing)

3.2.1.1 Assembly and Mechanical Protection

3.2.1.1.1 Torque Test

A metallic fitting, other than a locknut or hub, which is internally threaded for attachment to threaded conduit shall withstand the tightening torque specified in Table 2-1, when assembled to the intended conduit. There shall be no stripping of threads or damage to the fitting. A fitting intended for assembly to threaded conduit without threading shall not be tested.

3.2.1.1.2 A set-screw type fitting for electrical metallic tubing, when assembled as described in 2.1.2.2, shall not decrease the internal diameter of the tubing by more than 15 percent and shall not deform the end of the tubing even when the latter is displaced 1/4 in. (6.35 mm) from the end stop. After assembly, the tubing shall permit the passage of a plug go-gauge having the diameter indicated in Table 3-1.

© Copyright 2003 by the National Electrical Manufacturers Association.

Copyright National Electrical Manufacturers Association
Provided by IHS under license with NEMA
No reproduction or networking permitted without license from IHS
Not for Resale

3.2.1.2 Electrical Protection

3.2.1.2.1 When tested in accordance with 4.3.2, a threadless fitting for threaded or unthreaded non-flexible raceway shall not have a voltage drop exceeding 10 millivolts.

3.2.2 Fittings for use with Flexible Metal Conduit

3.2.2.1 Assembly and Mechanical Protection

3.2.2.1.1 A connector for flexible metal conduit shall have a smooth well-rounded end stop that completely encircles the end of the conduit. The diameter of the end stop shall be within the limits indicated in Table 2-2.

3.2.2.1.2 A flexible metal conduit fitting which assembles to the inside of the conduit (screw-in type) in the 3/8 (12), 1/2 (16), or 3/4 (21) trade size shall not exceed the diameter given in Table 3-3.

3.2.2.1.3 Direct bearing screws used in a connector for flexible metal conduit shall not be smaller than No. 10 and shall be of the tangential type (See Figure 3-1). A set screw of the radial type (see Figure 3-2) can be used provided that the angle between the axis of the screw and the axis of the conduit is not more than 60 degrees.

3.2.2.1.4 In accordance with the requirements in 2.1.2.2, a flexible metal conduit fitting shall not puncture or deform the conduit so as to cause sharp edges in the wireway. For screw-in type fittings, the conduit used for the assembly shall be within 0.076 mm (0.003 in.) of the maximum inside diameter for the conduit. For fittings that assemble to the outside of the conduit, the conduit shall be within 0.127 mm (0.005 in.) of the maximum inside diameter for the conduit.

3.2.2.2 Electrical Protection

3.2.2.2.1 When tested in accordance with 4.3.2, a fitting for flexible metal conduit shall not have a voltage drop exceeding 50 millivolts.

3.2.3 Fittings for Use with Armored Cable

3.2.3.1 Assembly and Mechanical Protection

3.2.3.1.1 A connector for armored cable shall have a smooth well-rounded end stop that will prevent the cable armor from passing through. The throat diameter limits in Table 2-2 do not apply to armored cable fittings.

3.2.3.1.2 The design of an armored cable connector shall be such that an appropriate sized armor cable bushing will be held in place and will be visible after installation without disturbing the wiring.

3.2.3.1.3 Direct bearing screws used in a connector for armored cable shall not be smaller than No. 10 and shall be of the tangential type (See Figure 3-1).

3.2.3.1.4 In accordance with the requirements in 2.1.2.2, an armored cable fitting shall not puncture or deform the conduit so as to cause sharp edges in the wireway.

3.2.3.1 Electrical Protection

When tested in accordance with 4.3.2, a fitting for armored cable shall not have a voltage drop exceeding 50 millivolts.

3.2.3.2 Armored Cable Bushings

3.2.3.3.1 An armored cable bushing shall comply with the requirements in 2.1.2.3, 2.1.3.2 and 2.1.3.3.

3.2.3.3.2 An armored cable bushing shall be of a readily distinguishable color such as red, orange, or yellow.

© Copyright 2003 by the National Electrical Manufacturers Association.

Copyright National Electrical Manufacturers Association
Provided by IHS under license with NEMA
No reproduction or networking permitted without license from IHS
Not for Resale

3.2.3.3.3 The dimensions of an armored cable bushing shall be in accordance with Table 3-4. For all sizes of bushings, the maximum percentage of the circumference that contains projections is 40% of the outside diameter of the bushing. The bushing size for a given range of armored cable is shown in Table 3-4.

3.2.4 Fittings for Use with Metal Clad Cable

3.2.4.1 Assembly and Mechanical Protection

3.2.4.1.1 A connector for metal clad cable shall have a smooth well-rounded end stop that will prevent the cable armor from passing through. The throat diameter limits in Table 2-2 do not apply to metal clad cable fittings.

3.2.4.1.2 Metal clad cable fittings shall comply with the requirements in 2.1.2.2 except that compression gland type fittings when assembled with aluminum sheathed MC cable shall be assembled with a tightening torque of 79.1 N•m (700 lbs. in.) for all trade sizes over 3/4 (21). In addition to 2.1.2.2, assembly of an MC cable fitting shall not puncture the cable armor.

3.2.4.2 Electrical Protection

3.2.4.2.1 When tested in accordance with 3.2.4.2.2, a fitting for metal-clad cable shall not have a voltage drop exceeding 50 millivolts.

3.2.4.2.2 Fittings are to be assembled as intended in accordance with 3.2.4.1.2. 152.4 mm (6 in.) of lead conductor shall be allowed to project out of the cable. The connector shall then be assembled to a threaded rigid conduit coupling. The test current shall be passed through the cable's sheath and threaded coupling. The difference in potential between the cable and the threaded coupling shall be measured no more than 1.6 mm (1/16 in.) from the fitting or the contact point between the fitting and the cable.

3.2.5 Fittings for Use with Mineral-Insulated Cable

3.2.5.1 Assembly and Mechanical Protection

3.2.5.1.1 A fitting for use with mineral-insulated, metal-sheathed cable shall be provided with means for separation of the cable conductors. Except as stated in 3.2.5.1.4, the fitting shall also have a provision for sealing the end of the cable against the entrance of moisture.

3.2.5.1.2 Flexible insulating tubing having a minimum thickness of 0.51 mm (0.020 in.) shall be provided with each fitting. The inside diameter of the tubing shall be such that the tubing can be slipped easily over the bared conductors of cable of the largest AWG size for which the fitting is intended. At least 152.4 mm (6 in.) of tubing shall be provided for each cable conductor.

3.2.5.1.3 If insulating materials of different compositions are used with the same fitting, the materials shall be compatible.

3.2.5.1.4 If a mineral-insulated cable fitting does not have a means for sealing the end of the cable as part of the fitting, it shall be designed for use with a separate sealing fitting. When assembled as intended to mineral-insulated metal-sheathed cable, the fitting shall not permit the entrance of water.

3.2.5.2 Electrical Protection

When tested in accordance with 4.3.2, a fitting for mineral insulated cable shall not have a voltage drop exceeding 10 millivolts.

3.2.6 Fittings for Use with Liquidtight Flexible Metal Conduit

3.2.6.1 Assembly and Mechanical Protection

3.2.6.1.1 A fitting for use with liquidtight flexible metal conduit shall be provided with a positive end stop that will completely encircle the conduit and has a smooth rounded throat. The throat diameter limits in

© Copyright 2003 by the National Electrical Manufacturers Association.

Copyright National Electrical Manufacturers Association
Provided by IHS under license with NEMA
No reproduction or networking permitted without license from IHS Not for Resale

Table 2-2 do not apply to liquidtight flexible metal conduit fittings. The smooth end stop shall be provided by the body of the fitting or by a separate part applied over the cut end of the conduit.

3.2.6.1.2 A fitting for use with Liquidtight Flexible Metal Conduit of the 3/8 (12) trade size shall meet the requirements of 2.1.2.2 when assembled using a torque of 26.6 N•m (235 lbs-in.).

3.2.6.1.3 Any part of the fitting inserted into the conduit to assist in providing a smooth throat, a bond between the fitting and the conduit, or assembly to the conduit shall not reduce the inside diameter of the conduit by more than 15 percent.

3.2.6.2 Electrical Protection

3.2.6.2.1 When tested in accordance with 4.3.2, a fitting for liquidtight flexible metal conduit fitting shall not have a voltage drop exceeding 50 millivolts.

3.2.7 Fittings for Use with Liquidtight Flexible Nonmetallic Conduit

3.2.7.1 Assembly and Mechanical Protection

3.2.7.1.1 A fitting for use with liquidtight flexible nonmetallic conduit shall be provided with a positive end stop that will not allow the conduit to be pulled through. The throat diameter limits in Table 2-2 do not apply to fittings of metallic construction for use with liquidtight flexible nonmetallic conduit.

3.2.7.1.2 Any part of the fitting inserted into the conduit shall not reduce the inside diameter of the conduit by more than 15 percent.

3.2.7.2 Marking

3.2.7.2.1 The smallest unit shipping container for a fitting for liquid-tight flexible nonmetallic conduit shall be marked to indicate the type of conduit for which it is suitable, FNMC-A or FNMC-B.

NOTE–For future design, the following markings are recommended:

a. LFNC-A (instead of FNMC-A)
b. LFNC-B (instead of FNMC-B)

3.2.8 Locknuts Provided with Fittings

A locknut provided as part of fitting shall have dimensions not exceeding the maximum outside diameter specified in Figure 3-4.

3.2.9 Conduit Locknuts

3.2.9.1 Construction

Conduit locknuts shall be provided with notches or other means for tightening.

3.2.9.2 Dimensions

3.2.9.2.1 Conduit locknuts shall have internal threads, or an equivalent means to secure to threaded electrical rigid metal and intermediate metal conduit. Conduit locknuts that comply with the dimensional requirements in Figure 3-4 are considered in compliance with the applicable requirements in 2.1.2 and 2.1.6. Conduit locknuts that do not comply with these dimensions shall comply with the requirements in 3.2.9.3 and 3.2.9.4.

3.2.9.2.2 The maximum outside dimension of a conduit locknut shall not exceed the maximum outside diameter specified in Figure 3-4.

3.2.9.3 Assembly and Mechanical Protection

3.2.9.3.1 Conduit locknuts that do not comply with the dimensional requirements in Figure 3-4 shall comply with 3.2.9.3.2 and 3.2.9.4.

© Copyright 2003 by the National Electrical Manufacturers Association.

Copyright National Electrical Manufacturers Association
Provided by IHS under license with NEMA
No reproduction or networking permitted without license from IHS
Not for Resale

3.2.9.3.2 A set of two conduit locknuts shall comply with the applicable requirements in 2.1.2 and 2.1.6 when assembled as intended utilizing a length of threaded rigid conduit and a 3.2 mm (1/8-in.) thick steel plate for 1/2 (16) through 1-1/2 (41) trade size and 6.35 mm (¼-in.) thick for trades sizes 2 (53) and larger with the appropriate size knockout.

3.2.9.4 Electrical Protection

When tested in accordance with 4.3.2, a conduit locknut for use with rigid or intermediate metal conduit shall not have a voltage drop exceeding 15 millivolts.

3.2.10 Bushings

3.2.10.1 A nonmetallic bushing or component of a fitting intended as a bushing, shall comply with the applicable requirements in 2.1.3.3 and 2.1.3.4. In addition, each nonmetallic bushing or nonmetallic component of a fitting intended to be a bushing shall be assigned a temperature rating indicating the maximum continuous operating temperature to which it is to likely to be exposed in normal use.

3.2.10.2 A threaded bushing shall be provided with ribs or the equivalent to permit easy tightening.

3.2.11 Marking

The temperature rating of an insulating or insulated bushing described in 3.2.10.1 shall be marked on the fitting so that the marking is visible after installation. A fitting or bushing is not required to be marked when the temperature rating is 90º C. A bushing that is rated 150º C may be colored black or brown in lieu of a temperature rating marking. A bushing having any other temperature rating is not permitted to be colored black or brown.

3.2.12 Ground Clamps

Ground clamps shall comply with the applicable requirements of ANSI/UL 467.

3.2.13 Pulling, Strain Relief, and Support Grips

3.2.13.1 Assembly and Mechanical Protection

3.2.13.1.1 A grip shall consist of a mesh (wire, strand, or nonmetallic filament) that surrounds the object to which it is assembled and shall be provided with a means of termination. A grip shall be constructed so that a longitudinally applied force results in the mesh tightening circumferentially about the object in an even manner.

3.2.13.1.2 A strain relief grip attached to a fitting shall not interfere with the intended use of the fitting.

3.2.14 Reducing Washers

3.2.14.1 Dimensions

Reducing washers shall be of metal and consist of two pieces having a combined thickness of not less than 1.59 mm (0.0625 in.).

3.2.15 Service-Entrance Heads, Caps

3.2.15.1 Assembly and Mechanical Protection

3.2.15.1.1 A service entrance head for use on over-size conduit (conduit of a size larger than that corresponding in size to the other parts of the head) shall have an end stop with an internal diameter no larger than the maximum size indicated in Table 2-2 for the size of conduit on which it is intended to be installed. No minimum internal diameter of the end stop is specified for such a head.

3.2.15.1.2 A removable part provided as part of a service-entrance head that is intended to be removed and discarded when the head is assembled to specific raceways, shall be so secured that it will not inadvertently separate from the head during handling or shipment.

© Copyright 2003 by the National Electrical Manufacturers Association.

Copyright National Electrical Manufacturers Association
Provided by IHS under license with NEMA
No reproduction or networking permitted without license from IHS
Not for Resale

3.2.15.1.3 A service entrance head shall not have more than three open holes of which not more than one is uninsulated.

3.2.15.1.4 A service entrance cap for service entrance cable shall protect the open end of the jacket or braid of the cable from the entrance of rain and shall have suitable means for mounting and clamping the cable.

2.3.7.1 Electrical Protection

When tested in accordance with 4.3.2, a metallic service-entrance head intended for use on rigid metal conduit, intermediate metal conduit, or electrical metallic tubing, shall not have a voltage drop exceeding 10 millivolts.

3.2.16 Sill Plates

3.2.16.1 A sill plate for service entrance cable shall protect the cable where it enters the building and shall aid in preventing entry of water into the building.

3.2.16.2 A sill plate shall be provided with a means for drainage.

3.2.17 Bushings for Use in Metal Studs

A bushing for a metal stud shall be constructed of either metallic or nonmetallic material and shall securely fit in the size and shape of opening in a metal stud when installed as intended.

3.2.18 Closure Plugs and Plates

3.2.18.1 Assembly and Mechanical Protection

3.2.18.1.1 A plug or plate, threaded or otherwise, for closing an opening in a box or enclosure shall be of metal or other suitable material and shall maintain the integrity of the enclosure in which it is installed.

3.2.18.1.2 A closure plug shall not be removed by a force of 45 N (10 lbs.) applied in a direction most likely to dislodge it. A nonmetallic closure plug shall comply with this requirement when installed in a knockout of a metallic box and with consideration to the requirement in 2.1.3.2.

3.2.18.2 Dimensions

3.2.18.2.1 The thickness of a sheet steel plug or plate used to close an unused opening in a metal box or enclosure shall be not less than 0.66 mm (0.026 in.) for trade sizes up to 1-1/4 (35). For trade sizes greater than 1-1/4 inches (35) the thickness of a steel plug or plate shall be not less than 1.38 mm (0.054 in.). The thickness of aluminum plugs or plates shall be not less than 2.31 mm (0.091 in.) for any trade size.

3.2.18.2.2 A metallic plug or plate that is laminated shall have a total thickness not less than 1.38 mm (0.054 in.). The construction of a plug or plate employing a securing screw shall be such that the closure will be effective even though the screw becomes slightly loosened.

3.2.18.2.3 The thickness of a cast-metal plug for closing an opening in a box or enclosure shall be not less than 1.6 mm (1/16 in.) if of die-cast zinc, die-cast aluminum, or malleable iron, and shall be not less than 3.2 mm (1/8 in.) if of sand-cast, aluminum or cast iron.

3.2.18.2.4 A nonmetallic plug or plate or closures of materials other than those covered in this section shall comply with the applicable requirements in ANSI/UL 514A.

© Copyright 2003 by the National Electrical Manufacturers Association.

Copyright National Electrical Manufacturers Association
Provided by IHS under license with NEMA
No reproduction or networking permitted without license from IHS
Not for Resale

3.3 OUTLET BOXES, CONDUIT BODIES, JUNCTION BOXES, PULL BOXES, AND COVERS–SPECIFIC

3.3.1 Marking

3.3.1.1 A cast metal box having a volume of 1639 cm³ (100 cubic in.) or less and a conduit body intended to be used as a box to contain splices or having provision for mounting wiring devices, an extension ring, or a raised cover shall be durably and legibly marked with a volume in cubic inches and/or cubic centimeters (cm³) that does not exceed its actual volume. The marking shall be readily visible after installation and prior to the installation of conductors or cables. Marking of volume shall be reduced to the nearest 1/4 cubic inch, except that the use of 0.3 for 1/4 and 0.8 for 3/4 shall be permitted. See 3.3.2.2.3.

3.3.1.2 A cast metal box that is provided with a tapped hole for a grounding screw shall be marked to indicate the hole is intended for a ground screw. The marking is not required when the appropriate sized ground screw is provided with the box from the factory.

3.3.2 Cast Metal Outlet Boxes

3.3.2.1 Outlet Box Cover Dimensions

3.3.2.1.1 A cover that supports wiring devices shall comply with 3.3.2.1.2. A cover that supports a receptacle shall be provided with means to secure the receptacle by more than a single screw.

3.3.2.1.2 The thickness of covers for cast metal outlet boxes shall be as stated for boxes in 2.3.5.1, except that:

a) Cast metal covers, other than malleable iron or die-cast or permanent mold cast metal, shall be permitted to be thinner but not less than 2.4 mm (3/32 in.) if the cover is lined with firmly attached insulating material not less than 0.79 mm (1/32 in.) thick.

b) A sheet steel cover shall be made from material at least 1.59 mm (0.0625 in.) thick.

A cover of sheet aluminum alloy having a tensile strength not less than 117.3 MPa (17,000 psi), shall not be less than 2.31 mm (0.091 in.) thick.

3.3.2.1.3 A metal device closure, metal blank device box cover, or metal cover that is supported by a wiring device shall be constructed of steel not less than 0.76 mm (0.030 in.) thick, or copper alloy, aluminum, or die-cast zinc not less than 1.02 mm (0.040 in.) thick, or other equivalent material.

EXCEPTION–Covers and closures where formed or reinforced to provide adequate mechanical strength and suitability for the environment shall be permitted to be thinner.

3.3.2.1.4 A cover may be provided with holes and openings as in a) through d) below. After assembly to the box as intended, an outlet box cover shall have no open holes.

a) No more than four openings shall be provided for mounting a cover to a box.
b) A hole in an outlet box cover designed to permit the passage of a flexible cord shall have a smooth, rounded surface or shall be provided with an insulating bushing.
c) An outlet box cover provided with a tapped hole for connection to a wiring system shall conform to the applicable requirements in 3.2.1.
d) Openings for devices (device box covers only).

3.3.2.2 Device Boxes (FS and FD) Dimensions

3.3.2.2.1 The minimum face opening for a device box shall conform to the requirements in NEMA OS 1, *Sheet-Steel Outlet Boxes, Device Boxes, Covers, and Box Supports*.

© Copyright 2003 by the National Electrical Manufacturers Association.

Copyright National Electrical Manufacturers Association
Provided by IHS under license with NEMA
No reproduction or networking permitted without license from IHS
Not for Resale

3.3.2.2.2 The configuration of the face of single gang FS and FD boxes and multi-gang FS and FD boxes which use single gang covers shall conform to Figure 3-5.

3.3.2.2.3 The internal depth shall be not less than 44.45 mm (1-3/4 in.) for FS boxes and not less than 60.33 mm (2-1/8 inches) for FD boxes, unless marked with their internal volume in accordance with 3.3.1.1. The requirement in 3.3.1.1 does not apply to:

a. FS boxes 44.55 mm (1-3/4 in.) deep and
   -- single cover having a minimum internal volume per gang of 221.27 cm³ (13.5 cu. in.), or
   -- multicover having a minimum internal volume per gang of 295.02 cm³ (18 cu. in.),

b. FD boxes 60.33 mm (2-3/8 in.) deep and
   -- single cover having a minimum internal volume per gang of 295.02 cm³ (18 cu. in.), or
   -- multicover having a minimum internal volume per gang of 393.36 cm³ (24 cu. in.).

3.3.2.3.3 Weatherproof device covers for FS and FD type boxes, when provided with protective lids, shall be so designed to permit the proper closure of protective lids over wiring devices. Except where the wiring device is supplied with the cover, or where the instructions supplied with the cover indicate the specific wiring device(s) intended to be used, covers shall be designed to accept devices complying with the NEMA WD 6, *Wiring Devices, Dimensional Requirements.*

NOTE–GFCI receptacles are not within the scope of NEMA Standards Publication WD 6, however all current designs conform to the rectangular face dimensions of NEMA WD 6 except that their maximum reset button height is 0.500 inches rather than the 0.883 inches shown in NEMA WD 6.

3.3.3 Conduit Bodies

3.3.3.1 Conduit bodies shall be provided with integral external hubs.

3.3.3.2 A conduit body having an internal volume exceeding 1639 cm³ (100 cubic in.) shall have no provision for mounting switches, fuseholders, or other control devices.

3.3.3.3 A conduit body having an internal volume of 1639 cm³ (100 cubic in.) or less shall be permitted to have provision for mounting a wiring device if it is identified with its internal volume in accordance with 3.3.1.1.

3.3.4 Dimensions

3.3.3.4.1 Except as stated in 3.3.3.1.3, unless intended for use only with 6 AWG conductor or smaller,

a. A conduit body shall have a cross-sectional area not less than twice the cross-sectional area of the largest tubing or conduit that may be attached to it;
b. A conduit body of 3/4 (21) trade size and larger that does not change the direction of the wiring passing through it shall have a length at least eight times the trade diameter of the largest raceway that can be connected to it (the length shall be measured in accordance with Figure 3-6);
c. A conduit body of 3/4 (21) trade size and larger that permits a change in the direction of the wiring passing through it shall have a distance between each raceway entry and the opposite wall of the body at least six times the trade diameter of the largest raceway that can be connected to it plus the sum of the trade diameters of all other entries in the same wall, except that where a raceway entry is in a wall opposite a removable cover, the distance from that wall to the cover shall be permitted to be no less than that specified in Table 3-2 (the distances shall be measured in accordance with Figure 3-7).

3.3.3.4.2 The distance between raceway entries, designed to enclose a common conductor shall be not less than six times the trade diameter of the largest raceway.

© Copyright 2003 by the National Electrical Manufacturers Association.

Copyright National Electrical Manufacturers Association
Provided by IHS under license with NEMA
No reproduction or networking permitted without license from IHS
Not for Resale

3.3.3.4.3 A conduit body having dimensions less than those required in 3.3.3.1.1 and 3.3.3.1.2 shall comply with “Minimum Distance Between Conduit Body Hubs for Three-Conductor Installation With No Investigation” or Wire Pull Test in UL 514B.

3.3.3.4.4 The thickness of a conduit body cover shall be in accordance with Table 2-4.

3.3.5 Marking

3.3.5.1 A conduit body that is intended for use with a specific combination of conductors shall be permanently marked with the maximum number and maximum size of the conductors for which it is intended. The following conduit bodies need not comply with this requirement:

a. A conduit body that will accommodate only 1/2 (16) trade size conduit.
b. A conduit body marked for use only with No. 6 AWG or smaller conductors.
c. A conduit body complying with 3.3.3.4.1 b).

3.3.6 Junction and Pull Boxes

3.3.6.1 Dimensions

3.3.6.1.1 Except as stated in 3.3.4.1.2, a junction or pull box having provision for connection of conduit or tubing trade size 3/4 (21) or larger shall comply with the requirements in 3.3.3.4.1.

3.3.6.1.2 A pull box having dimensions less than those required by 3.3.4.1.1 is permitted for pull boxes that comply with the Wire Pull Test in UL 514B and are provided with installation instructions that clearly indicates the intended application.

© Copyright 2003 by the National Electrical Manufacturers Association.

Copyright National Electrical Manufacturers Association
Provided by IHS under license with NEMA
No reproduction or networking permitted without license from IHS
Not for Resale

Table 3-1
DIAMETER OF PLUG GO-GAUGE

Trade Size of Coupling or Connector	Metric Designator	mm (in) ± 0.025 mm (0.001 in.)	
		Connector	Coupling
3/8	(12)	10.64 (0.419)	10.64 (0.419)
1/2	(16)	13.44 (0.529)	13.44 (0.529)
3/4	(21)	17.78 (0.700)	17.78 (0.700)
1	(27)	22.66 (0.892)	22.66 (0.892)
1-1/4	(35)	29.79 (1.173)	29.79 (1.173)
1-1/2	(41)	34.77 (1.369)	34.77 (1.369)
2	(53)	44.63 (1.757)	44.63 (1.757)
2-1/2	(63)	58.95 (2.321)	58.95 (2.321)
3	(78)	72.47 (2.853)	70.10 (2.760)
3-1/2	(91)	82.78 (3.259)	81.08 (3.192)
4	(103)	93.57 (3.684)	92.00 (3.622)

Table 3-2
RADIUS OF BEND OF ANGLE FITTINGS

Conduit Trade Size	Metric Designator	Minimum Radius in Center of Fittings, mm (In.)*
½	(16)	102 (4)
3/4	(21)	114 (4-1/2)
1	(27)	146 (5-3/4)
1-1/4	(35)	184 (7-1/2)
1-1/2	(41)	210 (8-1/4)
2	(53)	241 (9-1/2)
2-1/2	(63)	267 (10-1/2)
3	(78)	330 (13)
3-1/2	(91)	381 (15)
4	(103)	406 (16)
5	(129)	610 (24)
6	(155)	762 (30)

* See 3.1.3.2 for exceptions

Table 3-3
OUTSIDE DIAMETER OF FLEXIBLE METAL CONDUIT FITTING OF THE SCREW-IN TYPE

Conduit Trade Size	Metric Designator	Maximum Diameter of Barrel, mm (Inches)
3/8	12	9.65 (0.380)
1/2	16	16.10 (0.634)
3/4	21	20.96 (0.825)

© Copyright 2003 by the National Electrical Manufacturers Association.

Copyright National Electrical Manufacturers Association
Provided by IHS under license with NEMA
No reproduction or networking permitted without license from IHS
Not for Resale

Table 3-4
ARMORED CABLE BUSHING DIMENSIONS

Bushing Size Number	**Armored Cable Internal Diameter Range		Wall Thickness		Tolerance (±)	
	Min, mm (in.)	Max, mm (in.)	mm	(in.)	mm	(in.)
0	5.33 (0.210)	8.89 (0.350)	0.64	0.025	0.25	0.010
1	7.78 (0.306)	11.68 (0.460)	0.74	0.029	0.28	0.011
2	10.92 (0430)	14.99 (0.590)	0.84	0.033	0.30	0.012
3	14.22 (0.560)	18.80 (0.740)	0.86	0.034	0.30	0.012
4	18.03 (0.710)	24.38 (0.960)	0.86	0.034	0.30	0.012
5	22.86 (0.900)	30.48 (1.200)	0.97	0.038	0.33	0.013
6	28.45 (1.120)	38.35 (1.510)	1.09	0.043	0.36	0.014
7	36.07 (1.420)	47.24 (1.860)	1.27	0.050	0.38	0.015
8	43.94 (1.730)	59.18 (2.330)	1.78	0.070	0.38	0.015

** For information only. Not a requirement

Table 3-5
DISTANCE FROM REMOVABLE COVER TO OPPOSITE WALL WITH RACEWAY OPENING

Trade Size	Metric Designator	Trade Diameter, mm (In.)	Minimum Distance Wall to Cover, mm (In.)
3/4	(21)	19.05 (0.750)	50.80 (2.0)
1	(27)	25.40 (1.00)	63.50 (2.50)
1-1/4	(35)	31.75 (1.25)	88.90 (3.50)
1-1/2	(41)	38.10 (1.50)	101.60 (4.0)
2	(53	50.80 (2.00)	127.00 (5.0)
2-1/2	(63)	63.50 (2.50)	152.40 (6.0)
3	(78)	76.20 (3.00)	203.20 (8.0)
3-1/2	(91)	88.90 (3.50)	203.20 (8.0)
4	(103)	101.60 (4.00)	254.00 (10.0)
5	(129)	127.00 (5.00)	304.80 (12.0)
6	(155)	152.40 (6.00)	304.80 (12.0)

© Copyright 2003 by the National Electrical Manufacturers Association.

Copyright National Electrical Manufacturers Association
Provided by IHS under license with NEMA
No reproduction or networking permitted without license from IHS
Not for Resale

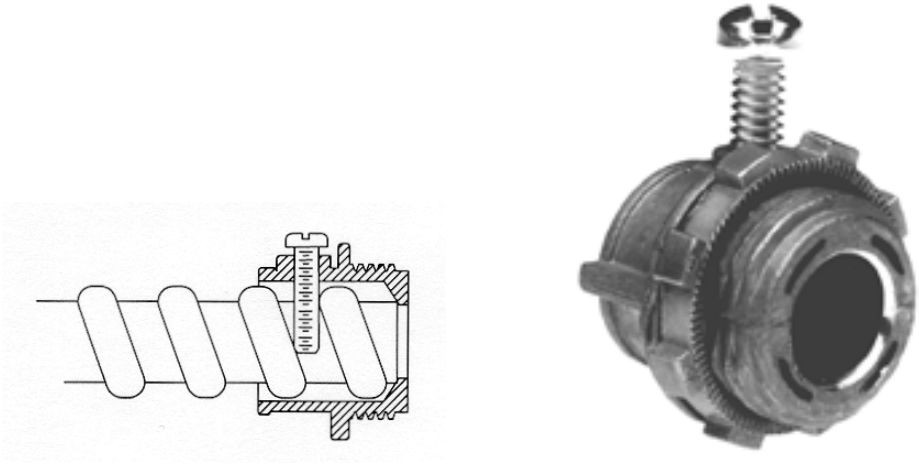

Figure 3-1
TANGENTIAL TYPE SCREW



Figure 3-2
RADIAL TYPE SCREW

© Copyright 2003 by the National Electrical Manufacturers Association.

Copyright National Electrical Manufacturers Association
Provided by IHS under license with NEMA
No reproduction or networking permitted without license from IHS
Not for Resale

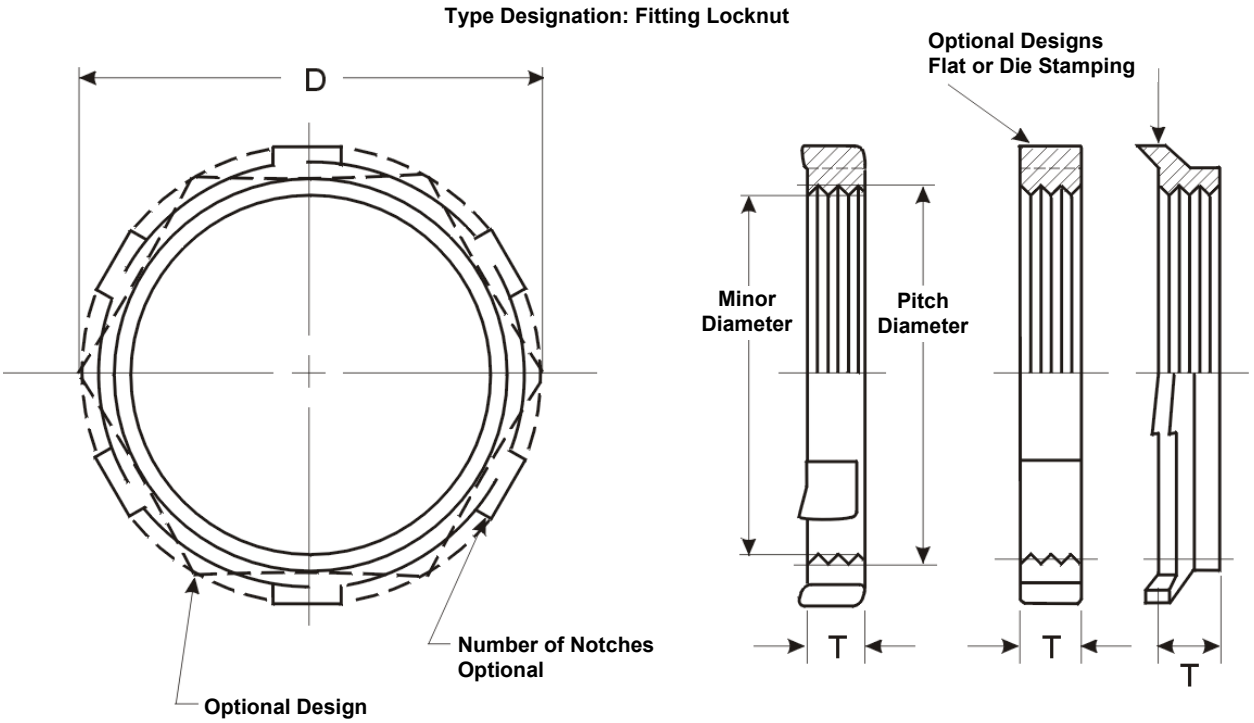

Figure 3-3
BASIC DIMENSIONS OF INTERNAL STRAIGHT PIPE THREADS FOR LOCKNUTS FOR USE WITH ELECTRICAL CONNECTORS HAVING TYPE NPT SHORT TAPERED EXTERNAL THREADS OR TYPE NPSM STRAIGHT EXTERNAL THREADS

Trade Size	Metric Designator	Threads Per 25.4 mm (in.)	Pitch of Thread mm (in.)	Thickness (T), Minimum mm (in.)	Pitch Diameter, mm (Inch) Minimum	Pitch Diameter, mm (Inch) Maximum	O.D. (D) mm (in.)	Minor Diameter, mm (in.) Minimum	Minor Diameter, mm (in.) Maximum
3/8	12	18	1.411 (0.05556)	2.286 (0.090)	16.078 (0.633)	16.256 (0.640)	24.64 (0.970)	15.55 (0.612)	15.80 (0.622)
1/2	16	14	1.814 (0.07143)	2.286 (0.090)	19.837 (0.781)	20.244 (0.797)	28.96 (1.140)	19.28 (0.759)	19.53 (0.769)
3/4	21	14	1.814 (0.07143)	2.794 (0.110)	25.197 (0.992)	25.578 (1.007)	36.07 (1.420)	24.61 (0.969)	24.87 (0.979)
1	27	11-1/2	2.209 (0.08696)	3.302 (0.130)	31.775 (1.251)	32.055 (1.262)	44.96 (1.770)	30.81 (1.213)	31.06 (1.223)
1-1/4	35	11-1/2	2.209 (0.08696)	3.302 (0.130)	40.538 (1.596)	40.818 (1.607)	57.94 (2.281)	39.57 (1.558)	39.83 (1.568)
1-1/2	41	11-1/2	2.209 (0.08696)	3.302 (0.130)	46.609 (1.835)	46.888 (1.846)	65.99 (2.598)	45.72 (1.800)	45.97 (1.810)
2	53	11-1/2	2.209 (0.08696)	3.302 (0.130)	58.649 (2.309)	58.928 (2.320)	80.65 (3.175)	57.76 (2.274)	58.01 (2.284)
2-1/2	63	8	3.175 (0.12500)	4.445 (0.175)	70.688 (2.783)	71.095 (2.799)	90.47 (3.562)	69.85 (2.750)	70.16 (2.762)
3	78	8	3.175 (0.12500)	4.445 (0.175)	86.563 (3.408)	86.995 (3.425)	107.95 (4.250)	98.43 (3.375)	86.03 (3.387)
3-1/2	91	8	3.175 (0.12500)	4.445 (0.175)	99.263 (3.908)	99.695 (3.925)	122.00 (5.803)	98.43 (3.875)	98.73 (3.887)
4	103	8	3.175 (0.12500)	4.445 (0.175)	111.912 (4.406)	112.395 (4.425)	137.21 (5.402)	111.13 (4.375)	111.43 (4.387)
5	129	8	3.175 (0.12500)	9.525 (0.375)	138.887 (5.468)	139.319 (5.485)	169.52 (6.674)	138.02 (5.434)	138.33 (5.446)
6	155	8	3.175 (0.12500)	9.525 (0.375)	165.735 (6.525)	166.167 (6.542)	201.52 (7.934)	164.87 (6.491)	165.18 (6.503)

All dimensions are after plating. Unless otherwise indicated, all dimensions apply to cut threads only.

These threads are applicable to those threads to be used with conduit, other conduit fittings or apparatus. Those products that are manufactured and furnished as a complete fitting and/or do not require thread interchangeability with conduit or other conduit fittings or locknuts need not apply.

© Copyright 2003 by the National Electrical Manufacturers Association.

Copyright National Electrical Manufacturers Association
Provided by IHS under license with NEMA
No reproduction or networking permitted without license from IHS
Not for Resale

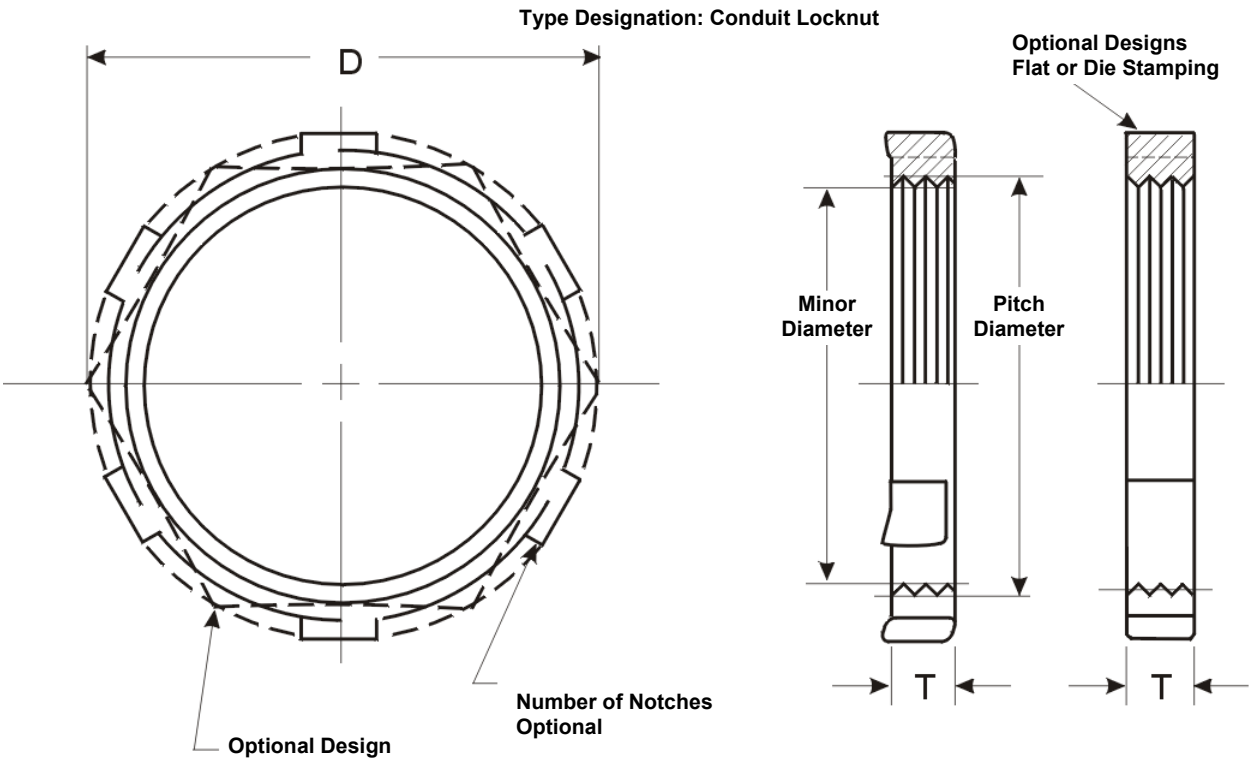

Figure 3-4
BASIC DIMENSIONS AND DIMENSIONS OF INTERNAL STRAIGHT PIPE THREADS FOR CONDUIT LOCKNUTS

Conduit Trade Size	Metric Designator	Threads per 25.4 mm (in.)	Pitch of Thread mm (in.)	Suggested Minimum Pitch Diameter mm (in.)	Maximum O.D. mm (in.)	Thickness (T) mm (in.)
3/8	12	18	1.411 (0.05556)	16.33 (0.643)	24.64 (0.970)	3.175 (0.125)
1/2	16	14	1.814 (0.07143)	20.29 (0.799)	28.96 (1.140)	3.175 (0.125)
3/4	21	14	1.814 (0.07143)	25.63 (1.009)	36.07 (1.420)	3.556 (0.140)
1	27	11-1/2	2.209 (0.08696)	32.11 (1.264)	44.96 (1.770)	4.318 (0.170)
1-1/4	35	11-1/2	2.209 (0.08696)	40.87 (1.609)	57.94 (2.281)	4.318 (0.170)
1-1/2	41	11-1/2	2.209 (0.08696)	46.96 (1.849)	65.99 (2.598)	4.318 (0.170)
2	53	11-1/2	2.209 (0.08696)	59.00 (2.323)	80.65 (3.175)	4.750 (0.187)
2-1/2	63	8	3.175 (0.12500)	71.15 (2.801)	90.47 (3.562)	9.525 (0.375)
3	78	8	3.175 (0.12500)	87.05 (3.427)	107.95 (4.250)	9.525 (0.375)
3-1/2	91	8	3.175 (0.12500)	99.75 (3.927)	122.00 (4.803)	11.125 (0.438)
4	103	8	3.175 (0.12500)	112.42 (4.426)	137.21 (5.402)	11.125 (0.438)
5	129	8	3.175 (0.12500)	139.40 (5.488)	169.52 (6.674)	12.700 (0.500)
6	155	8	3.175 (0.12500)	166.24 (6.545)	201.52 (7.934)	14.725 (0.562)

All dimensions are after plating and apply to cut threads only.
Unless otherwise indicated, all dimensions are in inches.

© Copyright 2003 by the National Electrical Manufacturers Association.

Copyright National Electrical Manufacturers Association
Provided by IHS under license with NEMA
No reproduction or networking permitted without license from IHS
Not for Resale

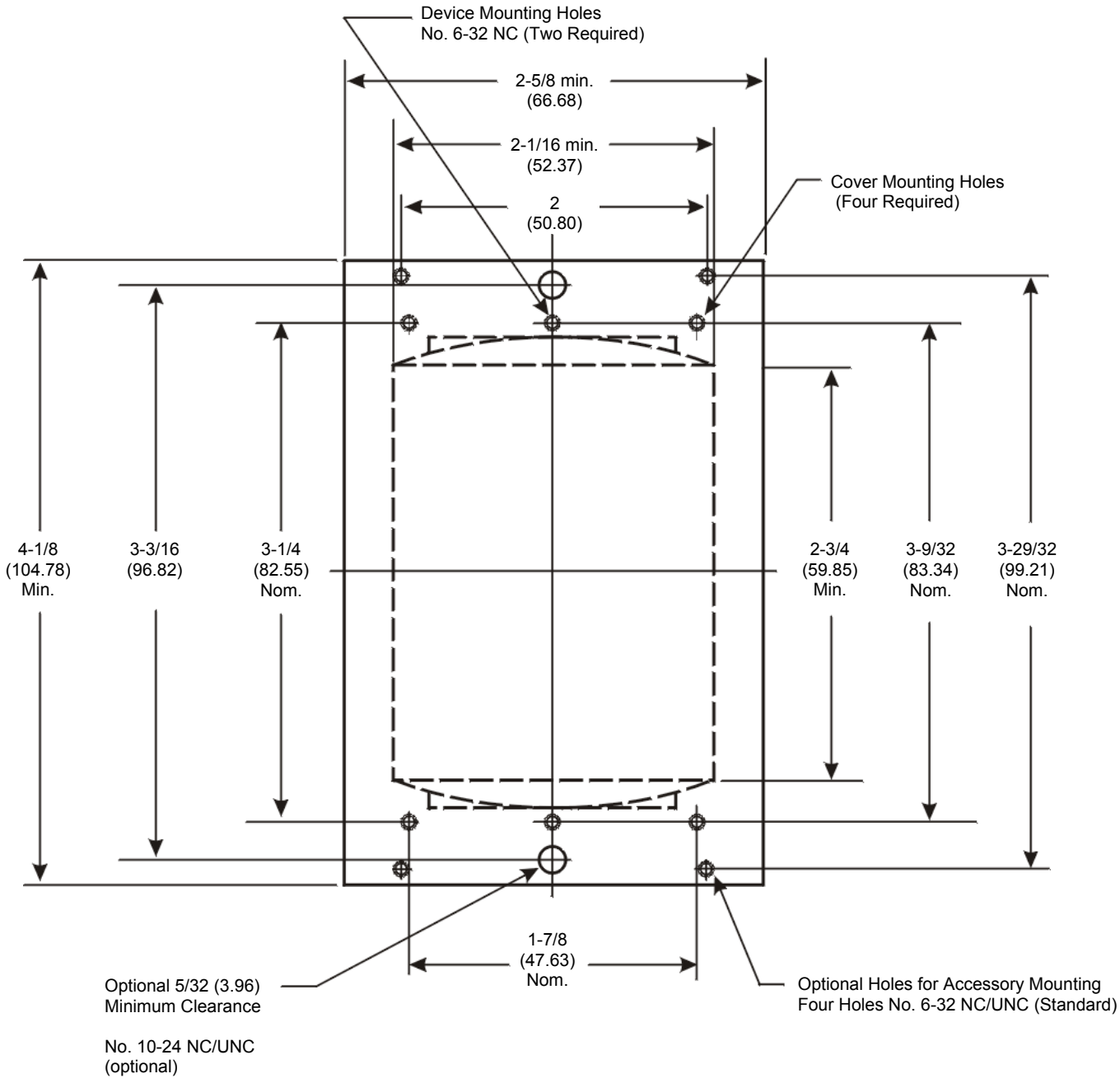

Figure 3-5
CONFIGURATION OF SINGLE-GANG FS AND FD BOX FACE
(also applicable to single-gang box faces on multi-gang boxes)

© Copyright 2003 by the National Electrical Manufacturers Association.

Copyright National Electrical Manufacturers Association
Provided by IHS under license with NEMA
No reproduction or networking permitted without license from IHS
Not for Resale

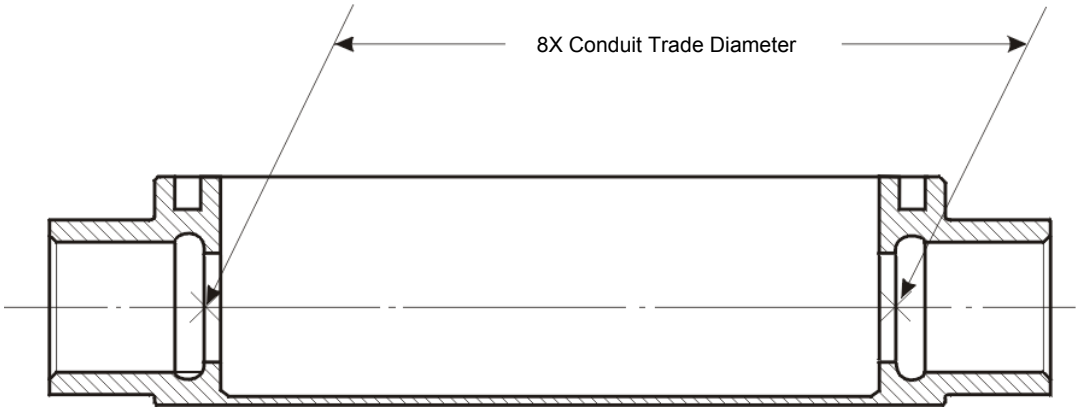

Figure 3-6
STRAIGHT PULL TYPE-C

NOTE—The Conduit Trade Diameter is the Conduit Trade Size represented in terms of fractions of an inch. For metric conversion 1 inch = 25.4 mm (Example: Conduit Trade Size 3/4 = 3/4 inch = 19 mm).

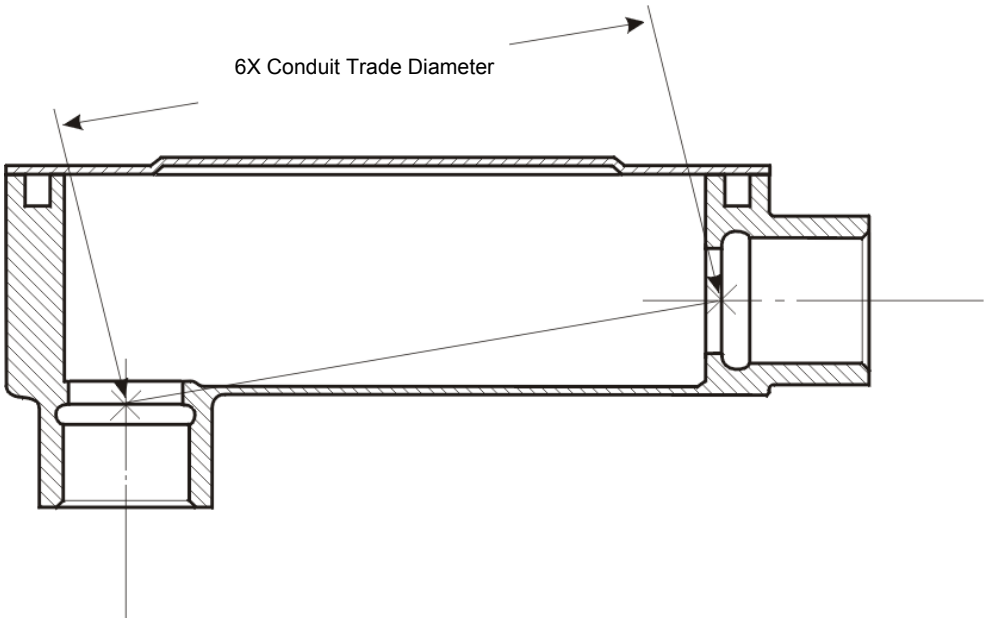

Figure 3-7
ANGLE PULL ENTRY OPPOSITE REMOVABLE COVER TYPE-LB

NOTE–The Conduit Trade Diameter is the Conduit Trade Size represented in terms of fractions of an inch. For metric conversion 1 inch = 25.4 mm (Example: Conduit Trade Size 3/4 = 3/4 inch = 19 mm).

© Copyright 2003 by the National Electrical Manufacturers Association.

Copyright National Electrical Manufacturers Association
Provided by IHS under license with NEMA
No reproduction or networking permitted without license from IHS
Not for Resale

Section 4
DESIGN TESTS

4.1 GENERAL

4.1.1 Design Tests

The following design tests are recommended means for demonstrating compliance with the requirements in Sections 2 and 3.

These design tests do not necessarily duplicate conditions encountered during installation or use and are not contemplated in normal production. To assure realistic testing, the fitting or box shall be mounted, as it would be in service. The users of this standard are referred to the NEMA FB 2 Series of Selection and Installation Guidelines for a description of intended installation practice.

4.1.2 Test Sampling

Unless otherwise specified, one sample of each fitting or box shall be subjected to the required tests. Where more than one sample is required, all samples shall pass the test.

4.1.3 Nonmetallic Materials

4.1.3.1 Resistance to Heat Tests (Clause 2.1.3.2)

Compliance with the requirement in 2.1.3.3 is determined by the following tests:

a. For an elastomer other than a thermoplastic elastomer, by the Elastomeric Materials Test in UL 514B.
b. For a thermoplastic elastomer, by the Thermoplastic Materials Test in UL 514B.

4.1.3.2 Resistance to Flame Propagation Test (Clause 2.1.3.3)

Compliance with the requirement in 2.1.3.4 shall be determined by the Flammability Test in UL 514B.

4.1.3.3 Tests for Assigning Temperature Ratings to Insulating or Insulated Bushings (3.2.10.1)

The temperature rating of an insulating material used for an insulating or insulated bushing as described in 3.2.10.1 shall be determined by the applicable requirements in UL 514B.

4.2 MECHANICAL PROTECTION

4.2.1 Assembly Test (2.1.2.2)

A fitting or conduit entry in a box shall comply with the requirements in 2.1.2.2 when assembled as described in 2.1.2.2 or superseded by specific requirements in Section 3.

4.2.2 Rod Entry Test (2.2.3.6)

With reference to Clause 2.2.3.6, this test shall be performed by attempting to insert the end portion of a straight rigid rod 4.8 mm (3/16 inch) in diameter into the cavity of the fitting (after the fitting has clamped the conduit or cable assembly in place). The fitting is in compliance if the rod cannot enter an opening between the fitting and the box or enclosure.

4.2.3 Mechanical Performance Testing Sequences

For further performance verification, fittings and boxes may be subjected to the appropriate mechanical tests, or sequence of tests, described in UL 514A, UL 514B, UL 514C, and UL 514D.

© Copyright 2003 by the National Electrical Manufacturers Association.

Copyright National Electrical Manufacturers Association
Provided by IHS under license with NEMA
No reproduction or networking permitted without license from IHS
Not for Resale

4.3 ELECTRICAL PROTECTION

4.3.1 Fault Current Test (Clause 2.1.6.1)

Compliance with the requirement in 2.1.6.1 is determined by the Current Test in UL 514B.

4.3.2 Electrical Continuity Test (Clause 2.1.6.2)

4.3.2.1 Requirement

When tested as described in 4.3.2.2, the maximum voltage drop shall not exceed that specified in Section 3 for each type fitting.

4.3.2.2 Test Method

The voltage drop shall be measured across the fitting between two points, one on the outside of the enclosure 1.6 mm (1/16 inch) from the edge of the fitting, and the other on the conduit 1.6 mm (1/16 inch) from the fitting. For a coupling, the voltage drop shall be measured between two points; one on each section of the conduit or tubing and 1.6 mm (1/16 inch) from the fitting.

4.4 ENVIRONMENTAL CLASSIFICATION

4.4.1 Rain Test (2.1.7.1)

Compliance with the requirement in 2.1.7.1 is determined by the Rain Test in UL 50.

4.4.2 Concrete Test (2.1.7.2)

Compliance with the requirement in 2.1.7.2 is determined by the Concrete Test in UL 514B. A fitting identified as "Concrete-Tight when Taped" is considered in compliance without test.

4.4.3 Oil Spray Test (2.1.7.3)

Compliance with the requirement in 2.1.7.3 is determined by the Oil Spray Test in UL 514B.

4.4.4 Type Rated Fittings and Boxes

Compliance with the requirement in 2.1.7.4 is determined by the appropriate tests in UL 50 or NEMA 250.

© Copyright 2003 by the National Electrical Manufacturers Association.

Copyright National Electrical Manufacturers Association
Provided by IHS under license with NEMA
No reproduction or networking permitted without license from IHS
Not for Resale

Section 5
MANUFACTURING STANDARDS

5.1 THREADS FOR FITTINGS, CAST METAL BOXES, AND CONDUIT BODIES

Cut threads on conduit fittings, cast metal boxes and conduit bodies for ordinary location applications shall comply with 5.1.1 through 5.1.4, as applicable. The construction of a threaded conduit entry shall conform to one of the types specified in 2.3.4.

EXCEPTION–Products manufactured and furnished as a complete assembly or which do not require thread interchangeability with conduit or conduit fittings shall not be required to comply with these standards.

5.1.1 Fittings and Conduit Entries with Internal Tapered Threads

5.1.1.1 Internal tapered threads provided with fittings and conduit entries intended for attachment of threaded rigid or intermediate metal conduit, or externally threaded (straight or tapered) fittings, shall comply with the thread form requirements in ANSI/ASME B1.20.1 and the gauging requirements in 5.1.1.2 of this standard.

5.1.1.2 Gauging

5.1.1.2.1 Gauging shall be performed on entries with clean, undamaged threads after any protective coatings or finishes have been applied.

5.1.1.2.2 A pipe plug or conduit nipple having a minimum thread tolerance (plus one turn on the NPT ring gage) shall be wrench-tightened into the entry and removed before gauging. Any remaining foreign particles (plating, coating, etc.) shall be wiped or blown away.

5.1.1.2.3 A standard NPT plug gage complying with ANSI/ASME B1.20.1 shall be inserted into the entry until it is firmly hand-tight. It shall not bottom on an integral bushing.

5.1.1.2.4 The number of turns to completely disengage the NPT plug gage shall be within the limits specified in Table 5-1.

NOTE–The range of gauging specifications given in this table is intended to give maximum design latitude within acceptable limits. To select a proper range for individual products, consideration should be given to the intended application for that particular product. L_1 + 1½ minimum is recommended to address the broadest application range.

5.1.1.2.5 In all cases, the minimum hub depth (or thread depth in the case of an entry without a thread relief) shall be equivalent to the actual thread depth needed to achieve the required number of disengagement turns falling within the specified range plus the equivalent length of 2 additional threads.

5.1.2 Fittings and Conduit Entries with Internal Straight Threads

Internal straight threads provided with fittings and conduit entries, such as short threads of a bushing or a hub intended for attachment of threaded rigid or intermediate metal conduit, or externally threaded (straight or tapered) fittings, shall comply with the thread form requirements in ANSI/ASME B1.20.1 and the gauging requirements in 5.1.2.1 of this standard.

5.1.2.1 Gauging

Gauging shall be performed on entries with clean, undamaged threads after any protective coatings or finishes have been applied.

A pipe plug or conduit nipple having NPSM threads and a pitch diameter conforming with ANSI/ASME B1.20.1 shall be wrench-tightened into the entry and removed before gauging. Any remaining foreign particles (plating, coating, etc.) shall be wiped or blown away.

© Copyright 2003 by the National Electrical Manufacturers Association.

Copyright National Electrical Manufacturers Association
Provided by IHS under license with NEMA
No reproduction or networking permitted without license from IHS
Not for Resale

A standard NPSM Go/No-Go plug gage complying with ANSI/ASME B1.20.1 shall be used to gauge the threads. The Go gage shall be able to freely thread into the entry. The No-Go gage shall not be able to thread into the entry.

The number of turns to completely disengage the NPSM Go gage shall not be less than the minimum specified in Table 5-2.

5.1.3 Fittings with External Straight Threads

Fittings for use with threaded rigid metal conduit couplings, threaded intermediate metal conduit couplings, or other electrical fittings having internal tapered or straight threads (cut threads, for ordinary location applications only) shall be in compliance with requirements in ANSI/ASME B1.20.1 and gauging practices as described in Section 9, paragraphs 9.1 through 9.2 and Table 6 of that standard.

5.1.4 Fittings with External Tapered Threads

Fittings for use with threaded rigid metal conduit couplings, intermediate metal conduit couplings, or other electrical fittings having internal tapered or straight threads shall comply with the gauging requirements in Table 5-3.

5.2 KNOCKOUT DIMENSIONS

Dimensions designed to assure compatibility of knockouts with locknuts, bushings and metal conduit (IMC or RIGID) are shown in Table 5-4.

5.3 DIMENSIONS OF FLAT SURFACES SURROUNDING KNOCKOUTS

Figure 5-1 illustrates dimensions of flat surfaces surrounding knockouts.

Table 5-1
NUMBER OF TURNS TO COMPLETELY DISENGAGE THE HAND-TIGHT NPT PLUG GAUGE FROM THE CONDUIT ENTRY

Conduit Entry Trade Size	Metric Designator	Minimum $L_1 + ½$	Reference $L_1 + 2$*	Reference $L_1 + 3½$	Maximum $L_1 + 5$
1/2	16	4.98	6.48	7.98	9.48
3/4	21	5.25	6.75	8.25	9.75
1	27	5.10	6.60	8.10	9.60
1-1/4	35	5.33	6.83	8.33	9.83
1-1/2	41	5.33	6.83	8.33	9.83
2	53	5.51	7.01	8.51	10.01
2-1/2	63	5.96	7.46	8.96	10.46
3	78	6.63	8.13	9.63	11.13
3-1/2	91	7.07	8.57	10.07	11.57
4	103	7.25	8.75	10.25	11.75
5	129	8.00	9.50	11.00	12.50
6	155	8.16	9.66	11.16	12.66

* Suggested minimum for use with fittings with external straight threads in accordance with 5.1.3.

© Copyright 2003 by the National Electrical Manufacturers Association.

Copyright National Electrical Manufacturers Association
Provided by IHS under license with NEMA
No reproduction or networking permitted without license from IHS
Not for Resale

Table 5-2
GAGING REQUIREMENTS FOR INTERNAL STRAIGHT PIPE THREADS FOR CONDUIT FITTINGS HAVING SHORT THREADS ON BUSHINGS OR HUBS FOR USE WITH THREADED RIGID METAL CONDUIT, THREADED INTERMEDIATE METAL CONDUIT, OR OTHER ELECTRICAL FITTINGS HAVING TAPERED OR STRAIGHT EXTERNAL THREADS (CUT THREADS—FOR ORDINARY LOCATION APPLICATIONS ONLY)

Conduit Entry Trade Size	Metric Designator	Threads per In.	Minimum Number of Turns, Engagement with an NPSM Plug gauge*	
			Bushings/Hubs with NPSM Short Threaded Entry	Fittings with NPSM Full Length Entry
3/8	12	18	3-1/2 turns	7-1/4 turns
1/2	16	14	3-1/2	7-1/2
3/4	21	14	4	7-1/2
1	27	11-1/2	4	7-1/4
1-1/4	35	11-1/2	4	8-1/4
1-1/2	41	11-1/2	4	8-1/4
2	53	11-1/2	4	8
2-1/2	63	8	4	9
3	78	8	4	9-1/2
3-1/2	91	8	4	10
4	103	8	4	10-1/2
5	129	8	4	11-1/4
6	155	8	4	12

*Gauging performed after plating

Table 5-3
GAGING REQUIREMENTS FOR EXTERNAL TAPERED THREADS FOR CONDUIT FITTINGS FOR USE WITH THREADED RIGID METAL CONDUIT COUPLINGS, THREADED INTERMEDIATE METAL CONDUIT COUPLINGS, OR OTHER ELECTRICAL FITTINGS HAVING TAPERED OR STRAIGHT INTERNAL THREADS (CUT THREADS—FOR ORDINARY LOCATION APPLICATIONS ONLY)

Conduit Entry Trade Size	Metric Designator	Threads per Inch	Hand Tight Engagement Number of Turns Gauged with Standard NPT Working Ring Gage*	
			Minimum	Maximum
1/2	16	14	3	5-1/2
3/4	21	14	3	5-1/2
1	27	11-1/2	3	5-3/4
1-1/4	35	11-1/2	4	6
1-1/2	41	11-1/2	4	6
2	53	11-1/2	4	6
2-1/2	63	8	4	6-1/2
3	78	8	5	7-1/4
3-1/2	91	8	5	7-3/4
4	103	8	5	7-3/4
5	129	8	6	8-1/2
6	155	8	6	8-3/4

*Gauging performed after plating

© Copyright 2003 by the National Electrical Manufacturers Association.

Copyright National Electrical Manufacturers Association
Provided by IHS under license with NEMA
No reproduction or networking permitted without license from IHS
Not for Resale

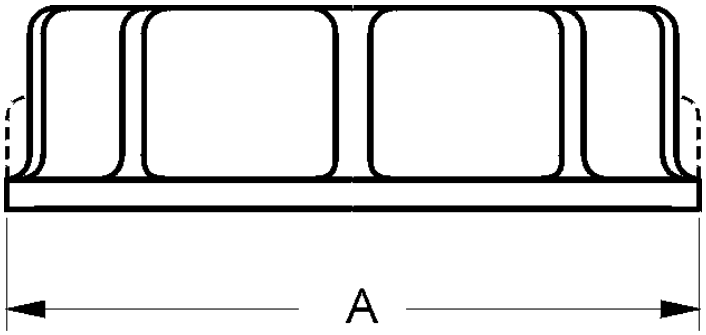

Metallic Bushing
(Figure 5-1a)

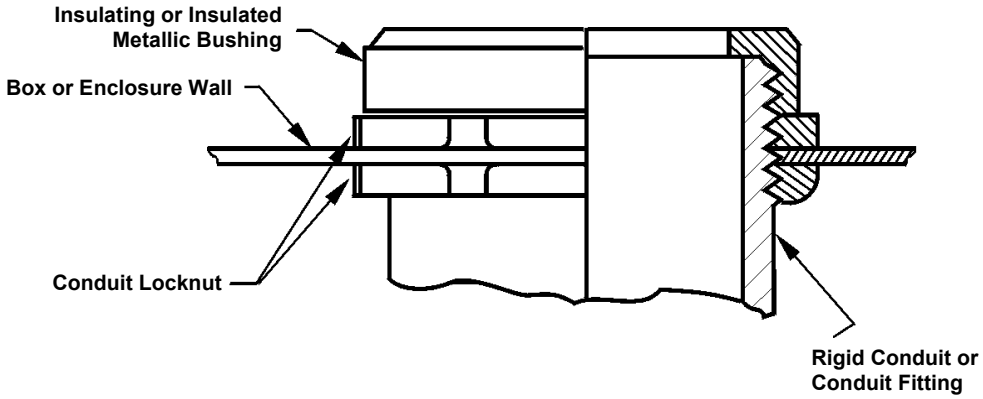

Nonmetallic Bushing with
Locknut Inside of Enclosure
(Figure 5-1b)

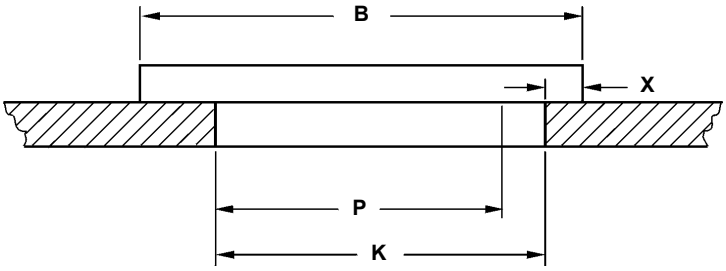

Minimum Overlap Over
Nominal Knockout
(Figure 5-1c)

Figure 5-1
FLAT SURFACES SURROUNDING KNOCKOUTS
(Illustrations are not design details.)

© Copyright 2003 by the National Electrical Manufacturers Association.

Copyright National Electrical Manufacturers Association
Provided by IHS under license with NEMA
No reproduction or networking permitted without license from IHS
Not for Resale

Table 5-4
COMPATIBILITY OF KNOCKOUT DIMENSIONS WITH LOCKNUTS, BUSHINGS, AND METAL CONDUIT (IMC OR RIGID) TO ASSURE COORDINATION

(Dimensions in mm)

Conduit Trade Size	Metric Designator	Major Diameter of External Thread		Knockout Diameter† ‡‡			Metallic Bushing With or Without Insulated Throat (See Figure 5-1a)		Nonmetallic Bushing With Locknut Inside of Enclosure (See Figures 5-1b and 5-1c)	
		Min. ‡ Dim. P*	Max††	Min.	Nom. Dim. K*	Max.	Diameter at Flange Min. Dim. A*	Overlap over Nominal Knockout Min.‡‡ Dim. X	Covering Diameter of Locknut, Knockout Dim. B*	Overlap over Nominal Knockout Min.‡‡ Dim. X
1/2	16	20.70	21.72	21.82	22.13	23.01	25.40	0.84	23.80	0.03
3/4	21	26.14	27.08	27.79	28.17	28.98	31.24	0.53	30.20	0.00
1	27	32.77	33.81	34.52	34.93	35.71	39.12	1.02	37.72	0.33
1-1/4	35	41.60	42.57	43.66	44.04	44.86	48.72	1.14	47.72	0.38
1-1/2	41	47.70	48.67	49.73	50.39	51.21	55.37	1.14	53.57	0.25
2	53	59.74	60.94	61.80	62.71	63.50	68.07	1.19	66.93	0.64
2-1/2	63	72.21	73.76	74.63	75.41	76.20	81.28	1.35	80.16	0.76
3	78	88.11	89.79	91.01	91.29	92.08	97.28	1.42	96.82	1.17
3-1/2	91	100.84	102.62	103.20	104.78	105.56	111.76	1.52	110.31	0.81
4	103	113.44	115.44	115.90	117.88	118.67	125.48	1.57	124.21	0.94
5	129	140.46	142.72	142.88	145.26	146.05	153.67	1.80	153.97	1.96
6	155	167.31	169.95	170.18	173.05	173.84	182.88	2.06	180.59	0.89

(Dimensions in inches)

Conduit Trade Size	Metric Designator	Major Diameter of External Thread		Knockout Diameter† ‡‡			Metallic Bushing With or Without Insulated Throat (See Figure 5-1a)		Nonmetallic Bushing With Locknut Inside of Enclosure (See Figures 5-1b and 5-1c)	
		Min. ‡ Dim. P*	Max††	Min.	Nom. Dim. K*	Max.	Diameter at Flange Min. Dim. A*	Overlap over Nominal Knockout Min.‡‡ Dim. X	Covering Diameter of Locknut, Knockout Dim. B*	Overlap over Nominal Knockout Min.‡‡ Dim. X
1/2	16	0.815	0.855	0.859	0.875	0.906	1.00	0.033	0.937	0.001
3/4	21	1.029	1.066	1.094	1.109	1.141	1.23	0.021	1.189	0.000
1	27	1.290	1.331	1.359	1.375	1.406	1.54	0.040	1.485	0.013
1-1/4	35	1.638	1.676	1.719	1.734	1.766	1.92	0.045	1.859	0.015
1-1/2	41	1.878	1.916	1.958	1.984	2.016	2.18	0.045	2.109	0.010
2	53	2.352	2.399	2.433	2.469	2.500	2.68	0.047	2.635	0.025
2-1/2	63	2.843	2.904	2.938	2.969	3.000	3.20	0.053	3.156	0.030
3	78	3.469	3.535	3.583	3.594	3.625	3.83	0.056	3.812	0.046
3-1/2	91	3.970	4.040	4.063	4.125	4.156	4.40	0.060	4.343	0.032
4	103	4.466	4.545	4.563	4.641	4.672	4.94	0.062	4.890	0.037
5	129	5.530	5.619	5.625	5.719	5.750	6.05	0.071	6.062	0.077
6	155	6.587	6.691	6.700	6.813	6.844	7.20	0.081	7.110	0.035

See Notes to Table 5-4 on the following page.

© Copyright 2003 by the National Electrical Manufacturers Association.

Copyright National Electrical Manufacturers Association
Provided by IHS under license with NEMA
No reproduction or networking permitted without license from IHS
Not for Resale

NOTES to Table 5-4—

* Dimensional changes in this column may cause incompatible assembly.

** These dimensions are for knockout diameters for single or concentric types only and exclude any projection of breakout ears or tabs.

† This dimension is the normal major diameter of the thread at E, or the nominal diameter of the intermediate metal conduit (Ref.: UL 6, UL 514B, UL 1242), whichever is less.

† The maximum diameter of rigid conduit (Ref.: ANSI C80.1)

‡ Dimensions for trade sizes of 1/2 through 1-1/4 (6 through 35) are from UL 514B. Minimum dimensions for larger sizes are necessary to clear the maximum diameter of the external thread (i.e. Col. 4 is greater than Col. 3).

‡‡ The stated values are calculated: the minimum overlap (Dim. X) equals the minimum diameter (at flange or outer diameter of locknut)(Dim. B), minus the minimum major thread diameter (Dim. P), divided by 2, minus the conduit clearance, which equals the nominal knockout diameter (Dim. K), minus the minimum major thread diameter (Dim. P). The relationship is given by:

$$X = \frac{B - P}{2} - (K - P)$$

© Copyright 2003 by the National Electrical Manufacturers Association.

Copyright National Electrical Manufacturers Association
Provided by IHS under license with NEMA
No reproduction or networking permitted without license from IHS
Not for Resale