NEMA FB*1 93 ■ 6470247 0504846 941 ■

NEMA STANDARDS PUBLICATION NO. FB 1

nema

Fittings, Cast Metal Boxes, and Conduit Bodies for Conduit and Cable Assemblies

NEMA

NATIONAL ELECTRICAL MANUFACTURERS ASSOCIATION ■ 2101 L STREET, N.W., WASHINGTON, D.C. 20037

Copyright National Electrical Manufacturers Association
Provided by IHS under license with NEMA
No reproduction or networking permitted without license from IHS
Not for Resale

NEMA Standards Publication No. FB 1-1993

FITTINGS, CAST METAL BOXES, AND CONDUIT BODIES FOR CONDUIT AND CABLE ASSEMBLIES

REVISION #1, AUGUST 25, 1993

Published by

National Electrical Manufacturers Association
2101 L Street, N.W.
Washington, DC 20037

©1993 by National Electrical Manufacturers Association

Copyright National Electrical Manufacturers Association
Provided by IHS under license with NEMA
No reproduction or networking permitted without license from IHS

Not for Resale

TABLE OF CONTENTS

Foreword i
History ii
Scope iii

Section 1 GENERAL
Referenced Standards 1
Units of Measurement 2
Definitions 2

Section 2 REQUIREMENTS FOR ALL FITTINGS
General 5
Metallic Materials 5
Nonmetallic Materials 6
Thread Dimensions 7
Box Connectors 7
Offset and Angle Fittings 7
Cross-Sectional Area 8
Locknuts 8
Classifications 9
Rod Entry 9
Marking 12

Section 3 FITTINGS FOR SPECIFIC WIRING SYSTEMS
Types 13
Fittings for Threaded Rigid Metal Conduit (GRC) and Threaded, Intermediate Metallic Conduit (IMC) and Electrical Metallic Tubing (EMT) 13
Fittings for Unthreaded Rigid Metal Conduit (GRC), Intermediate Metallic Conduit (IMC), and Electrical Metallic Tubing (EMT) 13
Fittings for Armored Cable (AC) and Flexible Metal Conduit 16
Nonmetallic-Sheathed Cable (NM and NMC) Fittings 17
Metal-Clad (MC) Fittings 18
Mineral-Insulated Metal-Sheathed Cable (MI) Fittings 19
Liquid-Tight Flexible Nonmetallic Conduit Fittings 21
Liquid-Tight Flexible Metal Conduit Fittings 21
Bushings 22
Ground Clamps 23
Fittings for Closure of Openings 23
Service-Entrance Cable Fittings (SE and USE) 23
Service Entrance Heads (Caps and Hoods) 24
Sill Plates 24

Section 4 REQUIREMENTS FOR CAST METAL BOXES AND CONDUIT BODIES
General 25
Metallic Materials 25
Conduit Entries 26
Openings 26
Classifications 26
Marking 26

Section 5 SPECIFIC REQUIREMENTS FOR CAST METAL BOXES, CONDUIT BODIES
Types 29
Device Boxes (FS and FD) 29
Outlet Boxes and Covers 29
Junction and Pull Boxes and Covers 32
Conduit Bodies and Covers 32

Copyright National Electrical Manufacturers Association
Provided by IHS under license with NEMA
No reproduction or networking permitted without license from IHS
Not for Resale

Section 6 DESIGN TESTS
General 35
Rod Entry Test 35
Rain Test 35
Oil Test (Oil-Tight) 35
Concrete Test 35
Flame Test 36
Electrical Continuity Test 37
Elastomeric Materials Deterioration Test 37
Tests for Assigning Temperature Ratings to Insulating Materials Used for Bushings 38

Section 7 MANUFACTURING STANDARDS
Threads for Fittings, Cast Metal Boxes, Conduit Bodies 39
Knockout Dimensions 41
Dimensions for Flat Surfaces Surrounding Knockouts 41

Copyright National Electrical Manufacturers Association
Provided by IHS under license with NEMA
No reproduction or networking permitted without license from IHS
Not for Resale

FOREWORD

This Standards Publication provides practical information concerning construction, test, performance, and manufacture of fittings, cast metal boxes, and conduit bodies for conduit and cable assemblies. These standards are intended for use by the electrical industry to provide guidelines for the manufacture and proper application of these products, and to promote the benefits of repetitive manufacture and widespread product availability.

One of the primary purposes of this Standards Publication is to encourage the manufacture and utilization of products which, in themselves, function in accordance with these standards. While some sections of this publication are intended to eliminate misunderstandings between manufacturers and users, all sections when applied properly, contribute to safety in one way or another.

The proper manufacture of fittings, cast metal boxes, and conduit bodies is however, only one consideration in promoting the safe utilization of electricity. Other safety considerations involve the joint efforts of the system designer, the various equipment manufacturers, the installer and the user. Information is provided herein to assist in proper selection and use.

The following factors are vital to a safe electrical system and should be considered by the user in the selection and application of equipment covered by this publication:

a. Environmental conditions
b. System design
c. Equipment selection and application
d. Installation
e. Operating practices
f. Maintenance

This Standards Publication covers design and performance requirements for fittings, cast metal boxes, and conduit bodies, and provides recommendations for their selection and use under normal or certain specific conditions. These standards have been promulgated with a view of promoting safety to persons and property when products conforming with them are selected, installed, and maintained in accordance with the National Electrical Code.

NEMA Standards Publications are periodically reviewed to meet changing conditions and technical progress, and the latest edition should be utilized. Purchasers who wish to keep their copies of this publication up to date should fill out and return the postal card which is inserted between the cover and the title page.

Comments from the users of this Standards Publication will be welcomed. They should be sent to:

Vice-President, Engineering Department
National Electrical Manufacturers Association
2101 L Street, N.W., Suite 300
Washington, D.C. 20037

Copyright National Electrical Manufacturers Association
Provided by IHS under license with NEMA
No reproduction or networking permitted without license from IHS
Not for Resale

HISTORY

This NEMA Standards Publication represents the results of many years of research and investigation by the members of NEMA, its predecessors, its Sections and Committees. It has been developed through continuing consultation among manufacturers, users, and national engineering societies. It reflects a study of the following publications, and credit is hereby given to all those whose standards have been helpful in the preparation of this document.

American National Standards Institute (ANSI)
11 West 42nd Street,
New York, NY 10036

American Society of Mechanical Engineers (ASME)
22 Law Drive,
Fairfield, NJ 07007

Institute of Electrical and Electronic Engineers (IEEE)
45 Hoes Lane, P.O. Box 1331,
Piscataway, NJ 08855-1331

National Fire Protection Association (NFPA)
Batterymarch Park,
Quincy, MA 02269

ANSI/ASME B1.20.1-1983	*General Purpose Pipe Threads*
ANSI/IEEE 268-1992	*Metric Practice*
ANSI/NFPA 70-1993	*National Electrical Code*
ANSI C80.1-1990	*Specification for Zinc Coated Rigid Steel Conduit*
ANSI C80.3-1991	*Specification for Zinc Coated Electrical Metallic Tubing*
ANSI C80.6-1986	*Intermediate Metal Conduit (IMC) Zinc Coated*

American Society for Testing and Materials
1916 Race Street,
Philadelphia, PA 19103

B86-88	*Specification for Zinc Alloy Die Castings*

Canadian Standards Association, Inc.
178 Rexdale Boulevard,
Rexdale, Ontario, Canada M9W 1R3

C22.2 No. 0.5-1982	*Threaded Conduit Entries*
C22.2 No. 18-1987	*Outlet Boxes, Conduit Boxes and Fittings*
C22.2 No. 41-1987	*Grounding and Bonding Equipment*

National Institute of Standards and Technology
U.S. Department of Commerce,
Washington, DC 20234

Fed-Standard H28 Part II	*Screw Thread Standards*

Copyright National Electrical Manufacturers Association
Provided by IHS under license with NEMA
No reproduction or networking permitted without license from IHS
Not for Resale

Underwriters Laboratories, Inc.
333 Pfingsten Road,
Northbrook, IL 60062-2096

UL 1-1985	*Standard for Flexible Metal Conduit*
UL 4-1986	*Standard for Armored Cable*
UL 6-1981	*Standard for Rigid Metallic Conduit*
UL 44-1991	*Standard for Rubber Insulated Wires and Cables*
UL 50-1988	*Standard for Electrical Cabinets and Boxes*
UL 62-1991	*Standard for Flexible Cord and Fixture Wire*
UL 94-1990	*Standard for Tests for Flammability of Plastic Materials for Parts in Devices and Appliances*
UL 360-1986	*Standard for Liquid-tight Flexible Steel Conduit*
UL 467-1984	*Standard for Grounding and Bonding Equipment*
UL 486 A-1990 & B-1990	*A & B Standard for Wire Connectors and Soldering Lugs*
UL 508-1988	*Standard for Electric Industrial Control Equipment*
UL 514A-1984	*Standard for Metallic Outlet Boxes*
UL 514B-1988	*Standard for Fittings for Conduit and Outlet Boxes*
UL 719-1985	*Standard for Nonmetallic Sheathed Cable*
UL 797-1983	*Standard for Electrical Metallic Tubing*
UL 854-1986	*Standard for Service Entrance Cable*
UL 1242-1985	*Standard for Intermediate Metal Conduit*

This document also reflects input from NEMA members of Sections other than the Conduit Fittings Section and from non-members of NEMA in both the public and private sector.

NEMA FB 1-1993 revises and supersedes FB 1-1988.

SCOPE

This Standards Publication applies to materials, construction, and performance of fittings, cast metal boxes, and conduit bodies used with round raceway systems and/or cable assemblies which distribute power in an electrical system as defined in the National Electrical Code (NFPA 70-1993) under Section 90-2 Scope. The items described in this Standards Publication are defined in Section 1.

These standards apply only to items covered by the Family Tree of the Conduit Fittings Industry, but not to explosion proof and dust-ignition proof fittings and enclosures for use in hazardous (classified) locations. Exceptions are those ordinary location fittings and enclosures which are specifically permitted by the National Electrical code in Class I, Division 2, and Class II and III Hazardous (classified) locations.

Copyright National Electrical Manufacturers Association
Provided by IHS under license with NEMA
No reproduction or networking permitted without license from IHS
Not for Resale

Section 1
GENERAL

1.1 REFERENCED STANDARDS

In this publication, reference is made to the standards listed below:

American National Standards Institute
11 West 42nd Street
New York, NY 10036

ANSI C80.1-1990	*Zinc-Coated Rigid Steel Conduit*
ANSI C80.6-1986	*Intermediate Metallic Conduit (IMC)—Zinc-Coated*
ANSI/ASME B1.20.1-1983	*General Purpose Pipe Threads (Inch)*
ANSI/IEEE 268-1992	*Metric Practice*
ANSI/NFPA 70-1993	*National Electrical Code*
ANSI/UL 44-1983	*Standard for Rubber Insulated Wires and Cables*
ANSI/UL 467-1984	*Grounding and Bonding Equipment*

American Society for Testing and Materials
1916 Race Street
Philadelphia, PA 19103

ASTM B86-1988	*Specification for Zinc Alloy Die Castings*

National Institute for Standards and Technology
U.S. Department of Commerce
Washington, DC 20234

Fed. Standard H28 (Part II)	*Screw Thread Standards*

National Electrical Manufacturers Association
2101 L Street, N.W., Suite 300
Washington, DC 20037

NEMA 250-1991	*Enclosures for Electrical Equipment (1000 V Max)*
NEMA WD 6-1988	*Dimensional Requirements for Wiring Devices*
NEMA OS 1-1989	*Sheet-Steel Outlet Boxes, Device Boxes, Covers and Box Supports*

Underwriters Laboratories, Inc.
333 Pfingsten Road
Northbrook, IL 60062

UL 6-1981	*Rigid Metal Conduit*
UL 50-1988	*Cabinets and Boxes*
UL 94-1980	*Tests for Flammability of Plastic Materials for Parts in Devices and Appliances*
UL 514A-1983	*Metallic Outlet Boxes*
UL 514B-1982	*Fittings for Conduit and Outlet Boxes*
UL 1242-1983	*Intermediate Metallic Conduit*

Copyright National Electrical Manufacturers Association
Provided by IHS under license with NEMA
No reproduction or networking permitted without license from IHS
Not for Resale

1.2 UNITS OF MEASUREMENT

The primary units of measure in this Standards Publication are based on the conventional inch-pound system which is commonly accepted and used by the electrical construction industry.

Where deemed appropriate and useful in this FB 1 Standards Publication, values are followed by their metric equivalent in parentheses, which are SI units in accordance with the ANSI/IEEE Standard 268. When two values are shown, the first stated value is the requirement.

No SI metric units should be assigned to thread dimensions, or conductor sizes. The use of degrees Celsius, however, has become accepted in the industry, and these values are the primary units and may be followed by the equivalent in degrees Fahrenheit.

1.3 DEFINITIONS

1.3.1 General

1.3.1.1 COPPER FREE ALUMINUM

An aluminum alloy that contains a maximum of 0.4 percent copper.

1.3.1.2 DESIGN TEST

A test that demonstrates conformance to a design with applicable standards; it is not intended to be a production test.

1.3.1.3 PRODUCTION TEST

A quality control test not intended to be a design test.

1.3.2 Fittings

1.3.2.1 ANGLE CONNECTOR

A box connector intended to change the direction of the axis of a length of raceway or cable assembly entering a box or enclosure.

1.3.2.2 BOX CONNECTOR

A connector whose primary function is to join threadless metal conduit, tubing, or cable assembly to knockout openings in a box or enclosure.

1.3.2.3 BUSHING

A means of preventing damage to the conductor insulation by providing a smooth well-rounded surface over which the conductor is pulled and on which it bears while it is in service.

a. *Bonding Bushing.* One that provides means for reliably bonding the bushing to the enclosure with which it is used.

b. *Grounding Bushing.* One that provides means for reliably connecting a bonding or grounding conductor to the bushing.

c. *Integral Bushing.* A construction in a conduit or raceway entry providing a smooth well-rounded surface over which the conductors are pulled and will bear in service.

1.3.2.4 CABLE SUPPORT FITTING

A fitting that provides means for supporting cables in a raceway system.

1.3.2.5 CABLE TRAY CONDUIT FITTING

A fitting that attaches electrical conduit, mechanically and electrically, to a cable tray and assures a reliable bond.

1.3.2.6 CONNECTOR

A fitting that joins a raceway or cable assembly to a box or fitting and also performs other functions such as strain relief, sealing, grounding and supporting.

1.3.2.7 COUPLING

A fitting intended to join two lengths of raceway.

1.3.2.8 ELBOW

A fitting intended to change the direction of the axis of a raceway system.

a. *Capped Elbow.* A fitting with a removable cover intended to provide access to the conduit system during wire pulling.

b. *Service Entrance Elbow.* A cast rain-tight 90-degree fitting, with removable cover, such that the outside end of the near hub is in line with the back of the fitting body.

1.3.2.9 EXPANSION FITTING

A fitting intended to compensate for linear movement of a span of raceway.

1.3.2.10 FITTINGS FOR CONDUIT AND CABLE ASSEMBLIES

Accessories to a wiring system that primarily perform a mechanical function and, under conditions defined in the *National Electrical Code* under Section 250-1, provide electrical continuity to the metallic raceway system and to metal clad and metallic-sheathed cable assemblies.

1.3.2.11 LOCKNUT

Primarily a mechanical fastener which attaches an externally threaded conduit or connector to an unthreaded opening in a box or enclosure and which, in some cases, is capable of performing an electrical function.

a. *Conduit Locknut.* A locknut that is used with threaded conduit and fittings having external threads.

b. *Connector Locknut.* A locknut that is used with box connectors having external threads.

Copyright National Electrical Manufacturers Association
Provided by IHS under license with NEMA
No reproduction or networking permitted without license from IHS
Not for Resale

1.3.2.12 NIPPLE

An externally threaded fitting intended primarily to serve as a short raceway between closely spaced enclosures.

1.3.2.13 OFFSET FITTING

A connector or coupling which offsets the axis of a raceway.

1.3.3.14 PULL FITTING

A fitting that permits pulling conductors at locations other than at a box.

1.3.3.15 SILL PLATE

A shield that protects a service entry into a building or structure.

1.3.3.16 SPLIT FITTING

A fitting split longitudinally so it can be placed in position after the wires have been drawn into the conduit, the part being held together by screws or other means.

1.3.3.17 STRAIN RELIEF FITTING

A connector that secures cable assemblies or flexible cord to an enclosure and inhibits strain on the equipment or device terminals, due to pulling or twisting of the cable assembly.

1.3.3.18 TERMINATOR

A fitting that joins an armored cable to a box, fitting, or raceway and also performs other functions such as strain relief, sealing, grounding, supporting, and so forth.

1.3.3 Boxes and Enclosures

1.3.3.1 BOX (ELECTRICAL)

An enclosure without a cover but with means for mounting a cover; it has provision for the entrance of conduit or cable assemblies.

1.3.3.2 CONDUIT BODY

A separate portion of a conduit or tubing system that provides access through a removable cover(s), to the interior of the system at a junction of two or more sections of the system or at a terminal point of the system.

Cast, sheet metal, nonmetallic, and other boxes such as FS and FD, or larger boxes, and fittings such as capped elbows and service entrance elbows are not classified as conduit bodies.

1.3.3.3 ENCLOSURE

Surrounding equipment constructed to provide a degree of protection to personnel against incidental contact with enclosed equipment or to protect enclosed equipment against specified environmental conditions.

1.3.3.4 FLUSH MOUNTED

Designed to have a minimal front projection when set into and secured to a flat surface.

1.3.3.5 FS OR FD BOX

A cast metal box having internal or external hubs or pads for drilling or tapping for attachment to conduit or cable assemblies. The box is designed to accommodate single-strap wiring devices and can be used as a pull or junction box. The box is designed for surface mounting in a single or multiple gang. It has a depth in accordance with 5.2.2.3 and is designed for wet locations when used with suitable cover(s).

The design can accommodate other specific environmental applications when used with suitable covers and accessories. Covers designed by different manufacturers are not normally interchangeable.

1.3.3.6 JUNCTION BOX

A box with a cover, it joins different runs of raceways or cables, or both, and provides space for the connection and branching of the enclosed conductors. There are no openings in the cover.

1.3.3.7 KNOCKOUT

A portion of the wall of the box or enclosure that may be removed readily at the time of installation in order to provide an unthreaded opening for the attachment of raceway, cable assemblies, or their fittings.

1.3.3.8 OUTLET BOX

A box used in an electrical wiring system for containing wire, splices, or devices. It has provisions for the entry of conduit or cable assemblies and for the attachment of a separate cover that is used to close the box or provide support for device or fixtures. With the cover in place, the enclosure guards against accidental contact with live parts and protects its environment from faults occurring within the enclosure.

1.3.3.9 PULL BOX

A box with a cover that is installed in one or more runs of raceway to facilitate pulling the conductors through the conduit system.

1.3.3.10 SURFACE MOUNTED

Designed to be secured to an exposed surface by means of external projections or to have a flat back where mounting screw holes can be drilled.

1.3.4 Conduit

1.3.4.1 ELECTRICAL METALLIC TUBING (EMT)

An unthreaded thin-wall raceway of circular cross-section providing a degree of protection for the wires or cables contained therein and providing an equipment grounding path.

1.3.4.2 INTERMEDIATE METALLIC CONDUIT

A threaded or unthreaded medium-wall metal raceway of circular cross-section providing a degree of protection

Copyright National Electrical Manufacturers Association
Provided by IHS under license with NEMA
No reproduction or networking permitted without license from IHS
Not for Resale

for the wires or cables contained therein and providing an equipment grounding path.

1.3.4.3 FLEXIBLE METAL CONDUIT

A flexible raceway of circular cross-section constructed of metal, providing a degree of protection for the wires or cables contained therein and, in some cases, providing an equipment grounding path.

1.3.4.4 LIQUID-TIGHT FLEXIBLE METAL CONDUIT

A flexible raceway of circular cross-section having an outer liquid-tight, nonmetallic, sunlight-resistant jacket over an inner flexible metal core, providing a degree of protection for the wires therein and in some cases, providing an equipment grounding path.

1.3.4.5 LIQUID-TIGHT FLEXIBLE NON-METALLIC CONDUIT

A flexible raceway of circular cross-section having a smooth innersurface with integral reinforcement within the conduit wall, providing a degree of protection for the wires or cables contained therein.

1.3.4.6 RIGID METAL CONDUIT (GRC)

A threaded or unthreaded heavy-wall metal raceway of circular cross-section, providing a degree of protection for the wire or cables contained therein and providing an equipment grounding path.

1.3.5 Cable Assemblies

1.3.5.1 ARMORED CABLE (TYPE AC)

A fabricated assembly of insulated conductors in a flexible metallic enclosure.

1.3.5.2 METAL-CLAD CABLE (TYPE MC)

A factory assembly of one or more conductors, each individually insulated and enclosed in a metallic sheath of interlocking tape, or smooth or corrugated tube.

1.3.5.3 MINERAL-INSULATED METAL-SHEATHED CABLE (TYPE MI)

A factory assembly of one or more conductors insulated with a highly compressed refractory mineral insulation and enclosed in a liquid-tight and gas-tight continuous copper sheath.

1.3.5.4 NONMETALLIC-SHEATHED CABLE (TYPES NM AND NMC)

A factory assembly of two or more insulated conductors having an outer sheath of moisture-resistant, flame-retardant, nonmetallic material with or without an insulated, covered, or bare equipment grounding conductor within the sheath.

1.3.5.5 PORTABLE CORD

A flexible factory assembly of two or more insulated stranded conductors, with or without an associated covered grounding conductor under a nonmetallic sheath.

1.3.5.6 SERVICE-ENTRANCE CABLE

A single conductor or multi-conductor assembly provided with or without an overall covering, primarily used for services and of the following types:

a. *Type SE.* Featuring a flame-retardant, moisture-resistant covering.

b. *Type USE.* Identified for underground use having a moisture-resistant covering. Not required to have a flame retardant covering.

1.3.5.7 UNDERGROUND FEEDER AND BRANCH-CIRCUIT CABLE (TYPE UF)

A factory assembly of two or more insulated conductors having an outer sheath of moisture-resistant, flame-retardant, nonmetallic material with or without an insulated, covered, or bare equipment grounding conductor within the sheath and suitable for direct burial.

1.3.6 Environmental Conditions

1.3.6.1 CONCRETE TIGHT

So constructed that embedment in freshly mixed concrete will not result in the entrance of concrete under specified test conditions.

1.3.6.2 DAMP LOCATIONS

Partially protected locations under canopies, marquees, roofed open porches, and like locations, and interior locations subject to moderate degrees of moisture, such as some basements, barns and cold-storage warehouses.

1.3.6.3 DRY LOCATIONS

Locations not normally subject to dampness or wetness. A location classified as dry may be temporarily subject to dampness or wetness as in the case of a building under construction.

1.3.6.4 INDOOR LOCATIONS

Those areas that are protected from exposure to the weather.

1.3.6.5 OIL-TIGHT

So constructed as to exclude oils, coolants, and similar liquids under specified test conditions.

1.3.6.6 OUTDOOR LOCATIONS

Those areas that are exposed to the weather.

1.3.6.7 RAIN-TIGHT

So constructed or protected as to exclude rain under specified test conditions.

Copyright National Electrical Manufacturers Association
Provided by IHS under license with NEMA
No reproduction or networking permitted without license from IHS
Not for Resale

Section 2
REQUIREMENTS FOR ALL FITTINGS

2.1 GENERAL

2.1.1 Applicability

The requirements in Section 2 apply to all fittings (or major categories of fittings, as in 2.8 and 2.9) within the scope of this standard. They are supplemented or modified by the requirements for specific types of fittings in Section 3.

2.1.2 Function

Fittings for use with conduit or cable assemblies, or both, to distribute power in an electrical system shall provide one or more of the following.

a. Electrical and mechanical protection to the conductors during and after the installation
b. Electrical continuity and the capacity to conduct safely any fault current likely to be imposed on them in accordance with the *National Electrical Code*
c. Protection to personnel from coming into contact with live conductors that are part of a wiring system or cable assembly, or both
d. Protection to personnel or a building and its contents from the effects of a fault current by continuing the electrical path back through the neutral of the system, to facilitate the operation of the overall current protection device and not add appreciably to the low impedance of the raceway system
e. Containment of a fault and the effects of a fault within metallic raceway systems that are designed to conduct a fault current in accordance with the *National Electrical Code*, thereby aiding in the prevention of fire from arcing faults
f. Seal between the conduits and the conductors entering an enclosure, or a seal between an enclosure and a raceway or cable assembly, or both
g. Support to conductors in a raceway system, or support of a cable assembly to an enclosure or a fitting, or both
h. Protection against damage to enclosures, equipment, building, or the raceway caused by linear thermal expansion and contraction of the raceway
i. Protection against the raceway's causing damage in the structure when one structure moves in relation to another structure
j. Protection against vibrating equipment transmitting vibrations to the building, other equipment, and so forth, through the raceway connection
k. Protection against the spread of fire or products of combustion, or both
l. Protection against the particular environment

2.2 METALLIC MATERIALS

2.2.1 Materials and Wall Thickness

Except as provided in Table 2-1, the wall thickness of fittings shall be not less than that specified in Table 2-1 when measured at least 1/8-inch (3.2 mm) from the edge of the fitting. If a taper is provided to permit easy withdrawal of the part from the die, the thickness shall not be less than that required at the base of threads when measured 1/32 inch (0.8 mm) from the edge of the fitting.

2.2.2 Zinc Die-Castings

Zinc die-castings shall meet the minimum requirements for die-castings AG40A and AC41A given in ASTM B86.

2.2.3 Coatings on Metallic Surfaces

2.2.3.1 NONCONDUCTIVE COATINGS

Nonconductive coatings such as paints, enamels, and similar coatings shall not be applied to fittings at threads, contact points, or contact surfaces unless the coatings are removed with the installation of the fittings or the fittings are so designed as to make such removal unnecessary.

2.2.3.2 CONDUCTIVE COATINGS

Conductive coatings applied to fittings at threads, contact points, or contact surfaces shall not prevent the fittings from meeting the electrical continuity test described in 6.9.

2.2.4 Corrosion Protection

2.2.4.1 FERROUS METALS

Ferrous metal fittings shall have zinc and/or equivalent protection in accordance with Table 2-2, with the following exceptions.

a. A fitting of stainless steel need not be so protected.
b. Cut edges including punched or threaded holes, need not be so protected.

Copyright National Electrical Manufacturers Association
Provided by IHS under license with NEMA
No reproduction or networking permitted without license from IHS
Not for Resale

c. Other types of coatings shall be acceptable for the purpose as determined by investigation.

Table 2-1
WALL THICKNESS OF FITTINGS

Material of Fitting	Minimum Wall Thickness Unthreaded Parts, Inches (mm)	Minimum Thickness at Base of Threads Inches (mm)
Sheet steel or machine steel	0.0250 (0.635)	0.0250 (0.635)* 0.0200 (0.508)**
Sheet aluminum	0.031 (0.79)	0.031 (0.79)
Die-cast aluminum, die cast zinc, or malleable iron	1/16 (1.6)†	1/32 (0.8)
Sand-cast aluminum, steel, bronze, or cast iron	1/8 (3.2)	3/32 (2.4)†† 1/16 (1.6)▲

*At the base of the cut threads

**At the base of rolled threads

†A flexible conduit or armored-cable connector or a fitting for electrical metallic tubing, of die-cast zinc, that employs a set screw for securing the cable or conduit and that is ribbed or otherwise reinforced shall be permitted to be less than 1/16 inch (1.6 mm) but not less that 3/64 inch (1.2 mm) thick provided that the threads of the screw or fitting are not stripped, the fitting is not cracked or otherwise impaired, and the conduit or cable is not damaged when a No. 8 screw is tightened with a torque of 20 pound-inches (2.26 N.m) and larger screws are tightened with a torque of 35 pound-inches (3.96 N.m). A fitting for electrical metallic tubing, flexible conduit, armored cable, or nonmetallic sheathed cable or other than the set screw type and of die-cast zinc shall be permitted to have a wall thickness of less than 1/16 inch (1.6 mm) but not less than 1/64 inch (0.4 mm) if it is ribbed or otherwise reinforced.

††At the base of threads in fittings of the 1-inch and larger trade sizes.

▲At the base of threads in fittings of the 3/4-inch and smaller trade sizes.

2.2.4.2 NONFERROUS METALS

Most nonferrous materials such as copper, zinc, aluminum, and their alloys are generally suitable for indoor and outdoor applications without the need for a protective coating.

2.2.4.3 ADDITIONAL PROTECTION

For applications involving severe or unusual corrosive environments, additional corrosion protection or materials having special characteristics may be required. The fittings manufacturer should be consulted.

2.3 NONMETALLIC MATERIALS

2.3.1 Materials Used for Insulating Purposes

A thermoplastic or thermosetting material used as a fitting or a part of a fitting for insulating purposes shall be assigned a temperature rating in accordance with 6.11.

Insulating materials shall meet the requirements of the flame test described in 6.8.

Table 2-2
THICKNESS OF PLATING

Type of Fittings and Material	Thickness of Plating Inch (mm) Average*	Minimum
Fittings parts, locknuts, and clamps intended for assembly inside a box	0.00015 (0.0038)	0.00010 (0.0025)
Outside of a sheet-steel or a machined steel coupling connector, bushing, or conduit locknut (other than one intended for assembly inside a box)	0.00050 (0.013)	0.00040 (0.0102)
Inside a sheet-steel or machined-steel fitting	**	**
Malleable or cast-iron boxes and fittings	**	**
Screws	**	**
Grounding Devices for use with water pipe or ground rod	0.00100 (0.025)	0.00080 (0.0202)

* The average thickness shall be determined using an electronic, magnetic, chemical, or electro-mechanical method, by the averaging of a minimum of the three readings, on three different surfaces, if possible. If the readings are taken from the same surface, then the locations at which these readings are taken shall be equally spaced along that surface.

** The minimum thickness of plating for these areas is not specified, but the presence of a plating is to be determined by visual inspection.

A composition that does not meet the flammability test requirements but is acceptable for the application shall be permitted to be used for a bushing—of the type used in boxes—or similar fitting that will not be part of the enclosure of wiring, splices, or live parts, and, except for a fitting for liquid-tight flexible metal conduit, will not be depended upon for the mechanical assembly of parts of a wiring system.

2.3.2 Elastomeric Materials

Components made of rubber or other elastomeric materials shall meet the requirements of the elastomeric materials deterioration test described in 6.10.

Copyright National Electrical Manufacturers Association
Provided by IHS under license with NEMA
No reproduction or networking permitted without license from IHS
Not for Resale

2.4 (RESERVED)

2.5 (RESERVED)

2.6 (RESERVED)

2.7 THREAD DIMENSIONS

See Section 7.

2.8 BOX CONNECTORS

Box connectors that connect to an unthreaded opening in a metal box shall provide reliable mechanical and, where applicable, electrical connection to the various types, surfaces, and thicknesses of metal (as shown in Table 2-3) to which they are likely to be attached and shall meet this requirement when tested with plated, painted, or enameled metal.

A box connector shall adequately close the knockout opening (see Table 7-5) after the conduit or cable assembly is clamped in place as determined by the requirements for the rod entry test described in 6.2.

2.8.1 Box Connectors with External Straight Threads

Box connectors with external straight threads that require a connector locknut to connect them to a knockout opening in a sheet metal enclosure shall be provided with such a locknut threaded onto the externally threaded end. The thread projection, when measured from the shoulder stop to the end of the threads along the major axis of the threaded projection, shall be not less than that specified in Table 2-4.

2.8.2 Box Connectors with External Tapered Threads

Box connectors with external tapered threads need not be provided with a locknut. The thread projection of box connectors with external tapered threads, when measured from the shoulder stop to the end of the thread along the major axis of the threaded projection, shall not be less than that specified in Table 2-4.

Consideration should, however, be given to longer thread lengths if the connector is to be used in threaded openings or with locknuts and bushings.

2.8.3 Box Connectors with Internal Threads

Box connectors with non-interchangeable internal threads, which utilize a male bushing to secure the connector to the box or enclosure, shall be provided with the bushing.

2.8.4 Box Connectors without Threads

Box connectors without threads shall be provided with all necessary means to secure the connector to the box or enclosure.

Table 2-3
METAL THICKNESS

Conduit Trade Size Designator	Metric Size Designator	Metal Thickness, Inches (mm)
3/8 to 1	(12 to 27)	0.026–0.091 (0.660–2.311)
1 to 2	(27 to 53)	0.032–0.091 (0.813–2.311)
2 to 6	(53 to 155)	0.032–0.153 (0.813–3.886)

Table 2-4
MINIMUM THREAD PROJECTION OF BOX CONNECTORS

Connector Trade Size Designator	Minimum Metric Size Designator	Thread Projection Inches (mm)
3/8	12	0.299 (7.59)
1/2	16	0.323 (8.20)
3/4	21	0.338 (8.59)
1	27	0.391 (9.93)
1-1/4	35	0.391 (9.93)
1-1/2	41	0.391 (9.93)
2	53	0.408 (10.36)
2-1/2	63	0.654 (16.61)
3	78	0.654 (16.61)
3-1/2	91	0.717 (18.21)
4	103	0.717 (18.21)
5	129	0.779 (19.79)
6	155	0.841 (21.36)

2.9 OFFSET AND ANGLE FITTINGS

2.9.1 Offset Fittings

An offset fitting intended to change the position of the axis of the raceway system shall have a removable cap or cover to facilitate the installation of wire if the offset is greater that 1 inch (25.4 mm) or if the axis of the offsetting section is at any angle greater than 35 degrees from the axis of the raceway.

2.9.2 Angle Fittings

An angle fitting intended to change the direction of the axis of a raceway system with a radius of bend less than that specified in Table 2-5 for the trade size of raceway for which the fitting is intended shall:

a. Have a removable cap or cover to facilitate the installation of wires

b. Comply with the requirements in the Wire Pull Test, Section 39 of UL 514B.

Copyright National Electrical Manufacturers Association
Provided by IHS under license with NEMA
No reproduction or networking permitted without license from IHS

Not for Resale

Exceptions:

a. This requirement does not apply to: (1) a liquid-tight flexible conduit fitting; or (2), a liquid-tight fitting for cord.

b. This requirement does not apply to an elbow, intended to be used as a connector that: (1), changes the direction of the wires entering it not more than 90 degrees; and (2), is secured to the raceway system by means other than turning.

Table 2-5
RADIUS OF BEND OF ANGLE FITTINGS

Conduit Trade Size Designator	Metric Size Designator	Minimum Radius in Center of Fittings, Inches* (mm)
1/2	16	4 (102)
3/4	21	4-1/2 (114)
1	27	5-3/4 (146)
1-1/4	35	7-1/2 (184)
1-1/2	41	8-1/4 (210)
2	53	9-1/2 (241)
2-1/2	63	10-1/2 (267)
3	78	13 (330)
3-1/2	91	15 (381)
4	103	16 (406)
5	129	24 (610)
6	155	30 (762)

*See 2.9.2 for exceptions

Table 2-6
INSIDE THROAT DIAMETERS OF FITTINGS AND BUSHINGS

Trade Size Designator	Metric Size, Designator	Throat Diameter, Inches (mm) Minimum	Maximum
3/8	12	0.444 (11.28)	0.493 (12.52)
1/2	16	0.560 (14.22)	0.622 (15.80)
3/4	21	0.742 (18.85)	0.824 (20.93)
1	27	0.944 (23.98)	1.049 (26.64)
1-1/4	35	1.242 (31.55)	1.380 (35.05)
1-1/2	41	1.449 (36.80)	1.610 (40.98)
2	53	1.860 (47.24)	2.067 (52.50)
2-1/2	63	2.222 (56.44)	2.469 (62.71)
3	78	2.761 (70.13)	3.068 (77.92)
3-1/2	91	3.193 (81.10)	3.548 (90.12)
4	103	3.623 (92.02)	4.026 (102.26)
5	129	4.542 (115.37)	5.047 (128.19)
6	155	5.458 (138.63)	6.065 (154.05)

2.10 CROSS-SECTIONAL AREA

Fittings (such as angle connectors, offset nipples, elbows, and so forth) that change the direction of a raceway or cable assembly shall have an internal cross-sectional area at all points not less than 80 percent of that provided by a bushing having a minimum throat diameter in accordance with Table 2-6.

2.11 LOCKNUTS

2.11.1 Construction Requirements

2.11.1.1 Conduit locknuts shall be provided with notches or other means for tightening.

2.11.1.2 The maximum outside dimension shall not exceed the maximum outside diameter specified in Figure 2-1.

2.11.1.3 Conduit locknuts shall substantially close the knockout opening with the conduit offset to present a worst case condition. Checking for conformity shall be by means of the rod entry test as specified in 6.2.

2.11.1.4 Conduit locknuts shall have internal threads, or an equivalent means, sized in accordance with the trade size and number of threads per inch shown in Figure 2-1 to assure assembly and performance with the appropriate size conduit as specified in 2.11.2.

2.11.1.5 A conduit locknut shall comply with 2.11.2.1 and 2.11.2.2 or the dimensional requirements of Figure 2-1.

2.11.2 Functional Requirements

2.11.2.1 ASSEMBLY

a. A sample conduit locknut shall be assembled on the appropriate size threaded rigid conduit. The assembly shall be made utilizing: a single conduit locknut, a threaded metal bushing, and a sheet metal box or steel plate having a minimum thickness specified in Table 2-3.

b. Initially, the installation is to be made only hand-tight (defined from here on as the application of 7 pound-inches (0.79 N.m) of torque to the assembly after the surface of the locknut is in intimate contact with the box or steel plate surface).

c. The rigid conduit shall be secured to prevent it from turning, and the locknut is to be further tightened until it has rotated at least 90 degrees.

d. At the end of the above assembly sequence, the locknut shall not be significantly damaged. Evidence of breakage, cracking, loosening of the assembly, jumping of threads on the rigid conduit, or stripping of the locknut's threads shall be unacceptable.

Copyright National Electrical Manufacturers Association
Provided by IHS under license with NEMA
No reproduction or networking permitted without license from IHS
Not for Resale

2.11.2.2 STRENGTHS

a. Another set of conduit locknut samples shall be selected and assembled, in the intended manner, utilizing a length of threaded rigid conduit and a ⅛-inch-thick (3.2 mm) steel plate (¼-inch [6.35 mm] thick for 2-inch trade size and larger) with appropriate size knockout.

b. The installation shall be made handtight (as defined above) utilizing two locknuts, one on each side of the knockout.

c. Either of the locknuts shall be further tightened by rotating it at least 90 degrees, utilizing any convenient means, while keeping the other locknuts stationary.

d. The assembly shall then be subjected to the electrical conformity test as per 6.9.

e. The same assembly shall then be subjected to the bend test as per 3.3.1.5.

f. At the conclusion of the above bend test, the assembly shall again be subjected to the repeated electrical continuity test. The voltage drop of this repeated test shall not exceed 15 millivolts.

g. Finally, the same assembly shall be subjected to a direct pull of the value given in Table 6-1 for a duration of one minute. There shall be no sign of damage or loosening of the assembly at the conclusion of these test sequences.

2.11.2.3 OTHER

The following are optional.

a. Assemble the conduit locknut samples per 2.11.2.1, parts a. through c.

b. For additional ratings such as concrete-tight or rain-tight see Section 6.

2.11.3 Connector Locknuts

A locknut provided as part of a connector shall be required to comply only with the maximum diameter as specified in Figure 2-2.

2.12 CLASSIFICATIONS

Fittings classified as rain-tight, oil-tight, or concrete-tight shall comply with the Rain-Tight Test in 6.3, the Oil-Tight Test in 6.6, or the Concrete-Tight Test in 6.7, respectively.

Exception: Rain-tight and oil-tight fittings shall be considered concrete tight.

2.13 ROD ENTRY

Fittings, when assembled as intended, shall substantially close all openings. Compliance shall be demonstrated by meeting the Rod Entry Test in 6.2.

2.14 MARKING

2.14.1 All Fittings

A fitting shall be legibly marked with the name or trademark of the manufacturer. If the catalog number or an equivalent designation is not marked on the fitting, it shall appear on the smallest shipping container in which the fitting is packaged.

2.14.2 Insulating Bushings or Parts

An insulating or insulated bushing, a fitting for use as a connector and having an insulating throat, and an insulating part for use as the throat of such a bushing or fitting shall be marked with its temperature rating so that the marking is visible after installation, except that a:

a. Component rated 150°C shall be permitted to be identified by a black or brown color

b. Component rated other than 150°C shall not be colored black or brown

c. Component rated 90°C shall not be required to be marked with its temperature rating

2.14.3 Fittings for Liquid-Tight Flexible Non-Metallic Conduit

The smallest unit carton of a fitting for liquid-tight flexible nonmetallic conduit shall be marked to indicate the type of conduit for which it is suitable, FNMC-A or FNMC-B.

2.14.4 Other Information

It is recommended that the following information be provided on the fitting, the smallest shipping container, or an instruction sheet:

a. Permissive or restrictive usage to designate the intended use of the fitting

b. Instructions for fittings requiring unique installation techniques

Copyright National Electrical Manufacturers Association
Provided by IHS under license with NEMA
No reproduction or networking permitted without license from IHS
Not for Resale

Conduit Trade Size Designator	Metric Size Designator	Threads per inch	Suggested Minimum Pitch of Thread Inches (mm)	Pitch Diameter Inches (mm)	Maximum O.D. Inches (mm)	T Thickness Inches (mm)
3/8	12	18	0.05556 (1.411)	0.643 (16.33)	0.970 (24.64)	0.125 (3.175)
1/2	16	14	0.07143 (1.814)	0.799 (20.29)	1.140 (28.96)	0.125 (3.175)
3/4	21	14	0.07143 (1.814)	1.009 (25.63)	1.420 (36.07)	0.140 (3.556)
1	27	11-1/2	0.08696 (2.209)	1.264 (32.11)	1.770 (44.96)	0.170 (4.318)
1-1/4	35	11-1/2	0.08696 (2.209)	1.609 (40.87)	2.281 (57.94)	0.170 (4.318)
1-1/2	41	11-1/2	0.08696 (2.209)	1.849 (46.96)	2.598 (65.99)	0.170 (4.318)
2	53	11-1/2	0.08696 (2.209)	2.323 (59.00)	3.175 (80.65)	0.187 (4.750)
2-1/2	63	8	0.12500 (3.175)	2.801 (71.15)	3.562 (90.47)	0.375 (9.525)
3	78	8	0.12500 (3.175)	3.427 (87.05)	4.250 (107.95)	0.375 (9.525)
3-1/2	91	8	0.12500 (3.175)	3.927 (99.75)	5.803 (122.00)	0.438 (11.125)
4	103	8	0.12500 (3.175)	4.426 (112.42)	5.402 (137.21)	0.438 (11.125)
5	129	8	0.12500 (3.175)	5.488 (139.40)	6.674 (169.52)	0.500 (12.700)
6	155	8	0.12500 (3.175)	6.545 (166.24)	7.934 (201.52)	0.562 (14.725)

All dimensions are after plating and apply to cut threads only.

Unless otherwise indicated, all dimensions are in inches.

Type Designation: Conduit Locknut

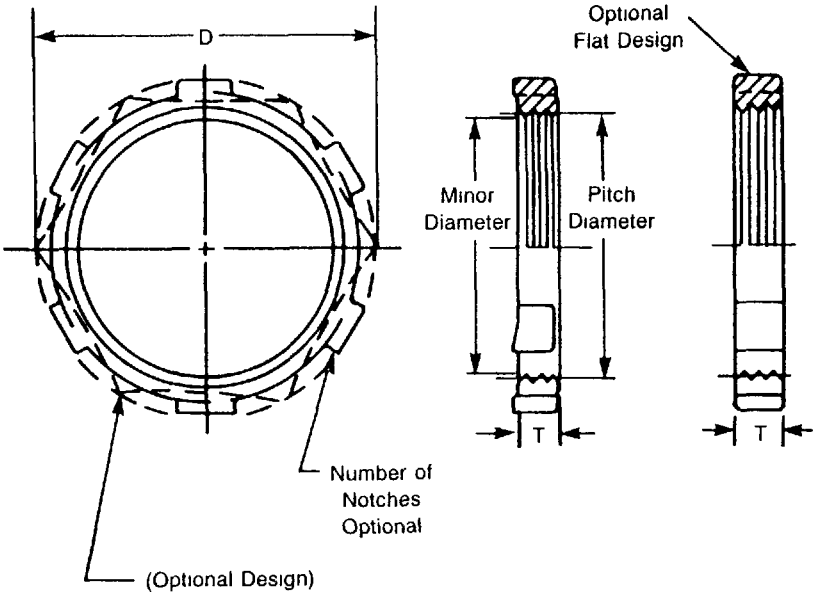

Figure 2-1

BASIC DIMENSIONS OF INTERNAL STRAIGHT PIPE THREADS FOR LOCKNUTS FOR USE WITH THREADED RIGID METAL CONDUIT (GRC) AND THREADED INTERMEDIATE METALLIC CONDUIT (IMC)

Copyright National Electrical Manufacturers Association
Provided by IHS under license with NEMA
No reproduction or networking permitted without license from IHS
Not for Resale

Conduit Trade Size Designator	Metric Size Designator	Threads Per Inch	Pitch of Thread Inches (mm)	T Thickness, Minimum Inches (mm)	Pitch Diameter Inches (mm) Minimum	Pitch Diameter Inches (mm) Maximum	O.D. D Inches (mm)	Minor Diameter Inches (mm) Minimum	Minor Diameter Inches (mm) Maximum
3/8	12	18	0.05556 (1.411)	0.090 (2.286)	0.633 (16.078)	0.640(16.256)	0.970 (24.64)	0.612 (15.55)	0.622 (15.80)
1/2	16	14	0.07143 (1.814)	0.090 (2.286)	0.781(19.837)	0.797 (20.244)	1.140 (28.96)	0.759 (19.28)	0.769 (19.53)
3/4	21	14	0.07143 (1.814)	0.110 (2.794)	0.992 (25.197)	1.007 (25.578)	1.420 (36.07)	0.969 (24.61)	0.979 (24.87)
1	27	11-1/2	0.08696 (2.209)	0.130 (3.302)	1.251 (31.775)	1.262 (32.055)	1.770 (44.96)	1.213 (30.81)	1.223 (31.06)
1-1/4	35	11-1/2	0.08696 (2.209)	0.130 (3.302)	1.596 (40.538)	1.607 (40.818)	2.281 (57.94)	1.558 (39.57)	1.568 (39.83)
1-1/2	41	11-1/2	0.08696 (2.209)	0.130 (3.302)	1.835 (46.609)	1.846 (46.888)	2.598 (65.99)	1.800 (45.72)	1.810 (45.97)
2	53	11-1/2	0.08696 (2.209)	0.130 (3.302)	2.309 (58.649)	2.320 (58.928)	3.175 (80.65)	2.274 (57.76)	2.284 (58.01)
2-1/2	63	8	0.12500 (3.175)	0.175 (4.445)	2.783 (70.688)	2.799 (71.095)	3.562 (90.47)	2.750 (69.85)	2.762 (70.16)
3	78	8	0.12500 (3.175)	0.175 (4.445)	3.408 (86.563)	3.425 (86.995)	4.250 (107.95)	3.375 (85.73)	3.387 (86.03)
3-1/2	91	8	0.12500 (3.175)	0.175 (4.445)	3.908 (99.263)	3.925 (99.695)	4.803 (122.00)	3.875 (98.43)	3.887 (98.73)
4	103	8	0.12500 (3.175)	0.175 (4.445)	4.406 (111.912)	4.425 (112.395)	5.402 (137.21)	4.375 (111.13)	4.387 (111.43)
5	129	8	0.12500 (3.175)	0.375 (9.525)	5.468 (138.887)	5.485 (139.319)	6.674 (169.52)	5.434 (138.02)	5.446 (138.33)
6	155	8	0.12500 (3.175)	0.375 (9.525)	6.525 (165.735)	6.542 (166.167)	7.934 (201.52)	6.491(164.87)	6.503 (165.18)

1. All dimensions are after plating and apply to cut thread only.

2. These threads are applicable to those threads to be used with conduit, other conduit fittings or apparatus. Those products that are manufactured and furnished as a complete fitting and/or do not require thread interchangeability with conduit or other conduit fittings or locknuts need not apply.

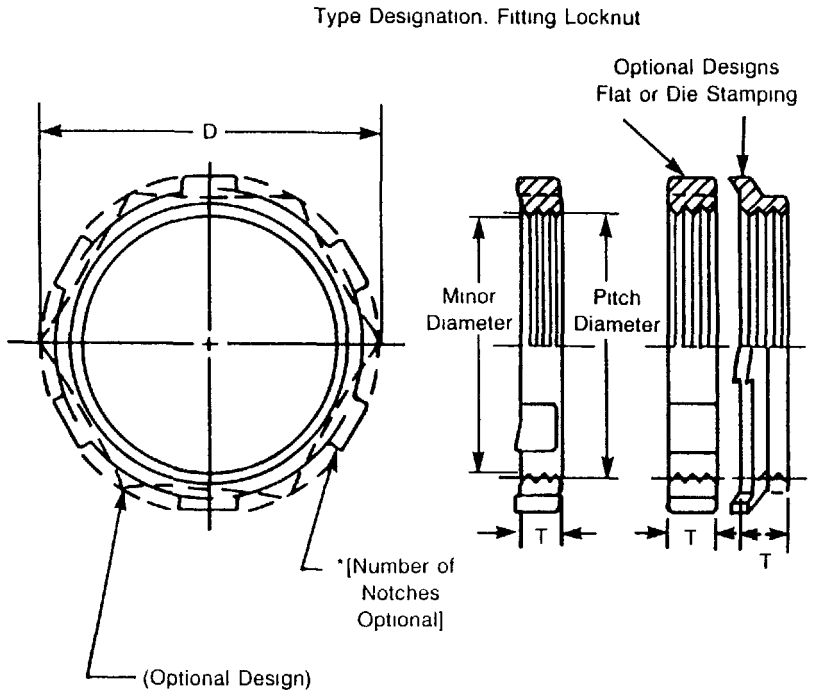

Figure 2-2

BASIC DIMENSIONS OF INTERNAL STRAIGHT PIPE THREADS FOR ELECTRICAL CONNECTOR LOCKNUTS FOR USE WITH ELECTRICAL CONNECTOR HAVING TYPE NTC SHORT TAPERED EXTERNAL THREADS OR TYPE NSC STRAIGHT EXTERNAL THREADS

Copyright National Electrical Manufacturers Association
Provided by IHS under license with NEMA
No reproduction or networking permitted without license from IHS
Not for Resale

--`,,`,`,-`-`,,`,,`,`,,`---

Copyright National Electrical Manufacturers Association
Provided by IHS under license with NEMA
No reproduction or networking permitted without license from IHS

Not for Resale

Section 3
FITTINGS FOR SPECIFIC WIRING SYSTEMS

3.1 TYPES

All fittings shall meet the applicable requirements in Section 2. In addition, specific types of fittings shall meet the requirements applicable to those types listed below.

a. Threaded rigid metal conduit (GRC) and threaded intermediate metal conduit (IMC) fittings—3.2
b. Unthreaded rigid metal conduit (GRC), unthreaded intermediate metallic conduit (IMC), and electrical metallic tubing (EMT) fittings—3.3
c. Armored cable (AC) and flexible metal conduit fittings—3.4
d. Nonmetallic-sheathed cable (NM and NMC) fittings—3.5
e. Metal-clad cable (MC) (corrugated interlocked armor and smooth sheathed aluminum) fittings—3.6
f. Mineral-insulated metal-sheathed cable (MI) fittings—3.7
g. Liquid-tight flexible nonmetallic conduit fittings—3.9
h. Liquid-tight flexible metal conduit fittings—3.10
i. Bushings—3.12
j. Ground clamps—3.13
k. Fittings for closure of openings—3.14
l. Reserved—3.15
m. Service entrance cable (SE and USE) fittings—3.16
n. Service entrance heads (caps and hoods)—3.17
o. Sill plates—3.18

3.2 FITTINGS FOR THREADED RIGID METAL CONDUIT (GRC) AND THREADED INTERMEDIATE METALLIC CONDUIT (IMC)

3.2.1 End Stop

A fitting, other than a coupling and locknut, which is internally threaded for attachment to GRC and IMC, shall be provided with a positive end stop for the conduit and an integral bushing or an equivalent smoothly rounded surface to prevent abrasion of insulation on the conductors entering the fitting from the conduit. The throat diameter of the end stop shall be in accordance with Table 2-6.

3.2.2 Torque Test

A metallic fitting, other than a locknut and hub, which is internally threaded for attachment to threaded GRC and IMC shall withstand the tightening torques listed in Table 6-1, when assembled to GRC or IMC without stripping the threads and without injury to the fitting.

Exception: A fitting for threaded GRC or IMC which is not intended to be threaded onto the conduit shall be exempted from the torque test. This fitting, however, shall meet the additional requirements in 3.3.1 as well as the remainder of 3.2.

3.2.3 Ground Fault

A fitting for threaded GRC and IMC shall be designed to conduct any anticipated ground fault current likely to be imposed on it.

3.2.4 Threaded Reducers

3.2.4.1 Threaded reducers shall be capable of adapting an entry to a smaller size of conduit, and shall be internally threaded for attachment of GRC or IMC.

3.2.4.2 The threaded conduit entry provided by a threaded reducer shall comply with 4.4 or shall have a tapered female thread or other suitable end stop for the conduit. If an end stop is provided, it shall have smoothly rounded surfaces at the point where abrasion of the insulation of conductors may occur. The throat diameters of the end stop shall comply with Table 2-6.

3.3 FITTINGS FOR UNTHREADED RIGID METAL CONDUIT (GRC), UNTHREADED INTERMEDIATE METAL CONDUIT (IMC) AND ELECTRICAL METALLIC TUBING (EMT)

3.3.1 Electrical Continuity and Mechanical Strength

3.3.1.1 TEST SEQUENCE

A fitting for unthreaded GRC, unthreaded IMC, or EMT shall be subjected to an electrical continuity test, a bend test, an electrical continuity test (repeated), and a pullout test, in that order.

3.3.1.2 TEST SAMPLES

The same samples shall be used throughout and shall not be conditioned in any way during the test sequence. Not less than six samples shall be tested except that, if a line of at least four trade sizes is being investigated, not less than three samples of each trade size shall be tested.

Copyright National Electrical Manufacturers Association
Provided by IHS under license with NEMA
No reproduction or networking permitted without license from IHS
Not for Resale

3.3.1.3 SAMPLE ASSEMBLY

The samples of the threadless fitting shall be assembled in the intended manner to short lengths of conduit or tubing of the proper size, and the raceway shall be pushed against the end or centering stop of the fitting before the latter is tightened. Except as noted herein, the tightening torque to be applied to the fitting shall be that given in Table 6-1 for threadless fittings. A fitting that can be tightened by means of a screwdriver shall be tightened with a torque of 35 pound-inches (3.96 N.m) except that any fitting using a No. 8 screw shall be tightened with a torque of 20 pound-inches (2.26 N.m). A bolt-head screw (unslotted, direct bearing, or securing a clamp) shall be wrench tightened with a torque of 160 pound-inches (18.10 N.m).

A threadless fitting provided with a tightening nut shall have the tightening torque applied by means of an open box or crescent wrench, except that a nut, which is not provided with flats suitable for use with such wrenches, shall be tightened by means of a pipe wrench.

3.3.1.4 ELECTRICAL CONTINUITY TEST

The assembly shall then be subjected to the Electrical Continuity Test as per 6.9

3.3.1.5 BEND TEST

The fitting shall not become separated from the conduit or tubing when subjected to the bend test.

For testing a threadless fitting, the assembly, with the fitting at the center, shall be placed on supports 30 inches (762 mm) apart as illustrated in Figure 3-1. The bending load indicated in Table 6-1 shall be suspended from the center of the fitting for 60 seconds, during which time the fitting and the lengths of conduit shall be rotated through the complete revolution about the major axis of the assembly. If the sample being tested is other than a coupling, the supports shall be separated by an additional distance of more than the 30 inches (762 mm) equal to the distance between the ends of the conduit in the box or fitting to give the required bending moment on the sample under test.

3.3.1.6 ELECTRICAL CONTINUITY TEST (REPEATED)

After the threadless fitting has been subjected to the bending test, the voltage drop across the fitting shall not be more than 15 millivolts in a repeated electrical continuity test performed as described in 6.9.

3.3.1.7 PULLOUT TEST

The fitting shall withstand for one minute, without damage and without pulling loose from the raceway, a direct pull of the value given in Table 6-1.

3.3.2 Ground Fault

A fitting for unthreaded GRC, unthreaded IMC, or EMT shall be designed to conduct any anticipated ground fault current likely to be imposed on it.

3.3.3 Fittings for Unthreaded GRC and IMC

3.3.3.1 END STOP

A fitting, other than a coupling, for use with unthreaded GRC and IMC shall have a smooth, well rounded end stop with a throat diameter within the limits indicated in Table 2-6.

3.3.3.2 CENTERING STOP

A coupling for use with unthreaded GRC or IMC shall have a centering stop with an effective diameter no less than the minimum throat diameter indicated in the second column of Table 2-6 for the smallest size of raceway intended to be accommodated.

3.3.4 EMT Fittings

3.3.4.1 END STOP

An EMT fitting, other than a coupling, shall have a smooth, well rounded end stop with a throat diameter within the limits indicated in Table 3-1.

3.3.4.2 CENTERING STOP

An EMT coupling shall have a centering stop with an effective diameter no less than the minimum throat diameter indicated in the third column in Table 3-1.

3.3.4.3 DEFORMATION

A fitting for electrical metallic tubing, when installed as it would be in service, shall not decrease the internal diameter of the tubing by more than 15 percent and shall not deform the end of the tubing even when the latter is displaced 1/4-inch (6.35 mm) from the end stop. One sample shall be assembled to a length of tubing in the intended manner, and another sample shall be assembled to a length of tubing, as intended, except that the tubing shall be displaced 1/4-inch (6.35 mm) from the end stop. After assembly, the tubing shall permit the passage of a plug go-gauge having the diameter indicated in Table 3-1.

Copyright National Electrical Manufacturers Association
Provided by IHS under license with NEMA
No reproduction or networking permitted without license from IHS
Not for Resale

Table 3-1
THROAT DIAMETERS OF END STOPS FOR EMT FITTINGS

Trade Size Designator of Coupling or Connector	Metric Size Designator	Maximum Throat Diameter End Stop, Inches (mm)	Minimum Throat Diameter Under Threaded Section, Inches (mm)	Diameter of Plug Gauge, Inches (mm) ±0.001	
				Connector	Coupling
3/8	12 EMT	0.493 (12.52)	0.444 (11.28)	0.419 (10.64)	0.419 (10.64)
1/2	16 EMT	0.622 (15.80)	0.560 (14.22)	0.529 (13.44)	0.529 (13.44)
3/4	21 EMT	0.824 (20.93)	0.742 (18.85)	0.700 (17.78)	0.700 (17.78)
1	27 EMT	1.049 (26.64)	0.944 (23.98)	0.892 (22.66)	0.892 (22.66)
1-1/4	35 EMT	1.380 (35.05)	1.242 (31.55)	1.173 (29.79)	1.173 (29.79)
1-1/2	41 EMT	1.610 (40.98)	1.449 (36.80)	1.369 (34.77)	1.369 (34.77)
2	53 EMT	2.067 (52.50)	1.860 (47.24)	1.757 (44.63)	1.757 (44.63)
2-1/2	63 EMT	2.731 (69.37)	2.222* (56.44)	2.321 (58.95)	2.321 (56.41)
3	78 EMT	3.356 (85.24)	2.761* (70.13)	2.853 (72.47)	2.760 (70.10)
3-1/2	91 EMT	3.834 (97.38)	3.193* (81.10)	3.259 (82.78)	3.192 (81.08)
4	103 EMT	4.334 (110.08)	3.623* (92.02)	3.684 (93.57)	3.622 (92.00)

*A reduced diameter under the threaded section shall not result in a sudden reduction in the inside diameter of the raceway.

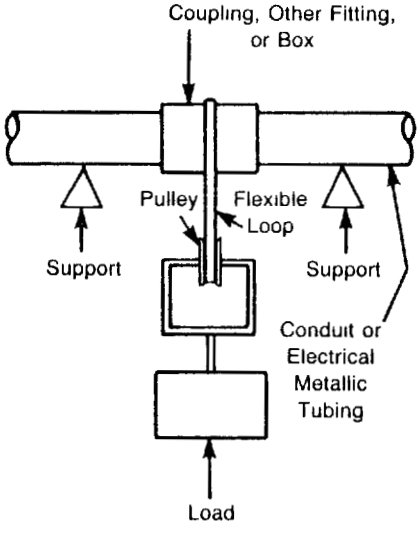

Figure 3-1
BENDING TEST FOR THREADLESS FITTINGS

Copyright National Electrical Manufacturers Association
Provided by IHS under license with NEMA
No reproduction or networking permitted without license from IHS
Not for Resale

3.4 FITTINGS FOR ARMORED CABLE (AC) AND FLEXIBLE METAL CONDUIT

3.4.1 End Stop

A connector for armored cable or flexible metal conduit shall have a smooth well rounded end stop which will prevent the cable armor or conduit from passing through. The end stop of a flexible-metal conduit fitting, other than an angle connector, shall completely encircle the enclosed end of the conduit when the latter is installed. The throat of the fitting shall be smooth and well rounded. The maximum and minimum inside diameter of the end stop of a flexible-metal conduit connector shall be within the limits indicated in Table 3-2. These requirements do not apply to the shoulder of a fitting that is secured to flexible metal conduit by insertion inside the conduit.

Table 3-2
INSIDE DIAMETER OF END STOP OF FLEXIBLE METAL CONDUIT FITTINGS

Trade size of Conduit, Inches	Inside Diameter, Inches (mm)	
	Minimum	Maximum
5/16	0.266 (6.76)	0.313 (7.95)
3/8	0.319 (8.10)	0.375 (9.35)
1/2	0.531 (13.49)	0.625 (15.88)
3/4	0.691 (17.55)	0.813 (20.65)
1	0.850 (21.59)	1.000 (25.40)
1-1/4	1.063 (27.00)	1.250 (31.75)
1-1/2	1.275 (32.39)	1.500 (38.10)
2	1.700 (43.18)	2.000 (50.80)
2-1/2	2.125 (53.98)	2.500 (63.50)
3	2.550 (64.77)	3.000 (76.20)
3-1/2	2.975 (75.57)	3.500 (88.90)
4	3.400 (86.36)	4.000 (101.60)

3.4.2 Anti-Short Bushing

The design of an armored cable connector shall be such that the anti-short bushing will be held in place and will be visible after installation without disturbing the wiring.

3.4.3 Diameter of Flexible Metal Conduit Fitting

A flexible metal conduit fitting which fits inside the raceway (screw-in type) in the 3/8-, 1/2-, and 3/4-inch trade size shall not exceed the diameter given in Table 3-3.

Table 3-3
OUTSIDE DIAMETER OF FLEXIBLE-METAL CONDUIT FITTING OF THE SCREW-IN TYPE

Trade Size of Conduit Inches	Maximum Diameter of Barrel Inches (mm)
3/8	0.380 (9.65)
1/2	0.634 (16.10)
3/4	0.825 (20.96)

3.4.4 Direct-Bearing Set Screws

Direct-bearing set screws used in a connector for armored cable or flexible metal conduit shall not be smaller than No. 10 and shall be of the tangential type, except that a set screw of the radial type (the axis of both the screw and the cable in the same plane) can be used in a connector for flexible metal conduit, provided that the angle between the axis of the screw and the axis of the conduit is not more than 60 degrees and is in the direction that will force the conduit into the connector.

3.4.5 Pull Test

A connector for armored cable or flexible metal conduit shall secure the cable or conduit so that it will withstand a steady pull as specified in UL514B, paragraph 42.2 for 5 minutes, so that the cable or conduit cannot be removed readily by bending or flexing.

3.4.5.1 MULTIPLE CONNECTORS

A multiple connector (such as a duplex connector) for armored cable or flexible metal conduit shall be tested with the appropriate cables or conduits properly attached to each opening or section. Each cable or conduit shall be subjected, one at a time, to the pull as specified in UL514B, paragraph 42.2.

3.4.5.2 ARMORED CABLE

The wires in armored cable shall project approximately 6 inches (152.4 mm) inside the box when the assembly is prepared for test. The armored cable, to be used in conducting tests on a connector intended for use with 14 AWG two-wire cable, shall have an outside diameter of 0.440 ±0.025 inch and the largest size of cable or conduit that the connector will accommodate. Each cable shall be 10 feet (3.048 meters) long, not including the 6 inches (152.4 mm) of wire inside the box.

3.4.5.3 SAMPLES

Six fittings of each trade size shall be subjected to each test, except that, if a line of at least four trade sizes of a particular design is being tested, three samples of each trade size shall be tested. Flexible metal conduit fittings shall be assembled to 10 foot (3.048 meters) lengths of flexible metal conduit of the corresponding trade size in the manner recommended by the manufacturer.

Copyright National Electrical Manufacturers Association
Provided by IHS under license with NEMA
No reproduction or networking permitted without license from IHS
Not for Resale

If unusual assembly techniques are required, suitable instructions for proper assembly should be provided with the fittings when shipped from the factory.

For screw-in fittings, the conduit shall be within 0.003 inch of the maximum inside diameter for the conduit. For outside fittings, the conduit shall be within 0.005 inch of the maximum inside diameter for the conduit.

3.4.5.4 DIRECT-BEARING SCREW-TYPE OR CLAMP-SCREW-TYPE

A direct-bearing screw-type or clamp-screw-type fitting shall be assembled and tightened with a torque of 35-pound-inches, (3.96 N.m) except that any fitting using a No. 8 screw shall be tightened with a torque of 20 pound-inches (2.26 N.m). The fitting shall not crack or break, and the thread of any clamping means shall not strip. The cable or conduit shall not be punctured or deformed so as to cause sharp edges in the wireway.

3.4.6 Electrical Continuity and Vibration Tests

All fittings shall be subjected to an electrical continuity test in accordance with 3.4.6.1. In addition, flexible metal conduit fittings of the 3/8-, 1/2-, and 3/4-inch trade sizes, flexible metal fittings of other trade sizes that are marked to indicate that they are of the grounding type, and all armored cable connectors shall be subjected to a vibration test (see 3.4.6.2) followed by an electrical continuity test (repeated) (see 3.4.6.3).

Exception: The vibration test and repeated electrical continuity test shall not be required of a fitting which is so constructed that a clamping action provides intimate contact with the intended raceway through all but a small portion of the circumference of the raceway, and that is secured in place by at least one machine screw.

3.4.6.1 ELECTRICAL CONTINUITY TEST

The fitting shall be subjected to the electrical continuity test described in 6.9. The voltage drop across the assembly shall not exceed 50 millivolts.

3.4.6.2 VIBRATION TEST

The fitting shall be rigidly attached to a vibrating machine. The cable or conduit shall be supported, but not clamped, at points 1 foot and 5-1/2 feet (304.8 and 1676 mm) from the fitting. At a point on the conduit or cable 10 feet (3.048 meters) from the fitting, the conduit or cable shall be secured after being rotated axially 180 degrees in a direction that would permit the conduit or cable to loosen the fitting. The assembly shall be vibrated for 24 hours through an amplitude of 1/32 inch (0.8 mm) at 2000 cycles per minute. The vibrating force shall be applied in a direction along the longitudinal axis of the fitting. The test is not passed if either the conduit or cable is damaged by the fitting or if the conduit or cable has loosened or backed away from the end stop of the fitting by more than 1/4-inch (6.35 mm).

3.4.6.3 ELECTRICAL CONTINUITY TEST (REPEATED)

Following tests described in 3.4.6.2, the fittings shall again be tested in accordance with 3.4.6.1.

3.4.7 Marking

A connector of the 3/8-inch trade size shall be capable of securing a 14 AWG two-wire cable unless it is marked to indicate that it is to be used with a cable of another size. A connector for armored cable that is not suitable for 14 AWG two-wire cable shall be marked with the range of cable outside dimensions on the connector or the smallest unit carton for which it is suitable.

3.4.8 Ground Fault

Fittings for armored cable shall be designed to conduct any anticipated ground fault current likely to be imposed on them.

3.5 NONMETALLIC-SHEATHED CABLE (NM AND NMC FITTINGS)

3.5.1 Pull Test

3.5.1.1 A connector for nonmetallic sheathed cable shall secure the cable so that the cable will withstand a direct pull of 60 pounds (266 N) for 5 minutes without damage to the insulation, without displacement of more than 1/8-inch (3.2 mm) and without loosening to the point where the cable can be readily removed by bending or flexing when the force is removed. The pull shall be applied between the cable and a box in which the connector is mounted in the intended manner.

3.5.1.2 The cut end of the cable sheath shall be in contact with the stop if one is provided; if no stop is provided, the cut end of the sheath shall extend approximately 1/4-inch (6.35 mm) beyond the connector. The wires of the cable shall be allowed to project approximately 6 inches (152.4 mm) inside the box. Nonmetallic sheathed cable with a plastic outer jacket shall be used in conducting the secureness test on a connector for use with 14-AWG two-wire cable. The cable shall have a minor axis of 0.165 to 0.235 inch and a major axis of 0.330 to 0.490 inch. A screw that can be tightened with a screwdriver shall be tightened with a torque of 35 pound-inches (3.96 N.m), except that a No. 8 screw shall be tightened with a torque of 20 pound-inches (2.26 N.m). See 3.5.2.

3.5.2 Range of Cable Sizes

A connector of the 3/8-inch trade size shall be capable of securing a 14-AWG two-wire cable unless it is marked to indicate that it is to be used with cable of another size; a connector that is not suitable for a 14-AWG two-wire cable shall be marked with the size of the smallest cable for which it is suitable.

Copyright National Electrical Manufacturers Association
Provided by IHS under license with NEMA
No reproduction or networking permitted without license from IHS

Not for Resale

3.6 METAL-CLAD (MC) CABLE FITTINGS

3.6.1 End Stop

Fittings for metal-clad cable shall be provided with a smooth well rounded end stop that will prevent the metal sheath from passing through.

3.6.2 Assembly

Fittings shall be assembled as follows without damaging the fittings, stripping threads, or puncturing the cable armor.

3.6.2.1 GLAND FITTINGS

Fittings with a gland shall be tightened with the torque indicated in Table 6-1, except that, when assembled with aluminum-sheathed cable, the torques shall be 700 pound-inches (79.19 N.m) for all trade sizes over 3/4 inch.

3.6.2.2 DIRECT-BEARING SCREW-TYPE OR CLAMP-SCREW-TYPE

Direct-bearing screw-type or clamp-screw-type fittings shall be tightened with a torque of 35 pound-inches (3.96 N.m) for screws that can be tightened with a screwdriver, except that a No. 8 screw shall be tightened with a torque of 20 pound-inches (2.26 N.m), or 160 pound-inches (18.10 N.m) for an unslotted bolthead screw.

3.6.2.3 OTHER

Fittings provided with specific assembly instructions shall be permitted to be assembled using the torque specified in the instructions.

3.6.3 Electrical Continuity and Mechanical Strength Tests

Fittings for metal-clad cable shall be subjected to the continuity test per 3.6.3.1, the bending test per 3.6.3.2, the repeated continuity test per 3.6.3.3, and the pull-out test per 3.6.3.4, in that order. The same samples shall be used for these tests.

3.6.3.1 ELECTRICAL CONTINUITY TEST

Fittings shall be subjected to the electrical continuity test described in 6.9.

a. *Method*

Fittings shall be assembled to lengths of cable using the tightening torques described in 3.6. Six inches (152.4 mm) of lead shall be allowed to project out of the cable, and the cable shall be inserted up to the end stop in the connector. The connector shall then be assembled to a threaded rigid conduit coupling representing a conduit hub in a box, and the test current of 30 amperes direct current passed through the cable sheath and threaded coupling. The difference in potential between the cable and the threaded coupling, 1/16 inch (1.6 mm) from the connector shall be measured.

b. *Evaluation*

This test is not passed if the voltage drop, measured between the cable and the coupling, exceeds 50 millivolts.

3.6.3.2 BEND TEST

Following the electrical continuity test described in 3.6.3.1, the same assemblies shall be subjected to the following bend test.

a. *Method*

The threaded couplings shall be secured in a pipe vise with the axis of the cable in line with the axis of the connector. The cable shall be bent around a wooden form having a radius as specified in Table 3-4. The cable shall be bent in one direction so that a 90-degree bend is formed. The wooden form shall be positioned on the opposite side of the cable. The cable shall then be bent 180 degrees in the opposite direction and then back to its original position in line with the axis of the connector.

b. *Evaluation*

This test is not passed if the assembly of cable and connector does not remain intact.

Table 3-4
BENDING RADIUS FOR METAL-CLAD CABLE

External Diameter of Cable (Inch)	Multiplying Factor for Inner Radius of Cable Bend*		
	Cable with Interlocked Type Armor or Corrugated Sheath	Shielded Connectors	Cables with Smooth Sheath
Not more than 3/4	7	12	10
More than 3/4, but not more than 1-1/2	7	12	12
More than 1-1/2	7	12	15

*The factor is to be multiplied by the external diameter of the cable to get the inner radius of the bend.

Copyright National Electrical Manufacturers Association
Provided by IHS under license with NEMA
No reproduction or networking permitted without license from IHS
Not for Resale

3.6.3.3 ELECTRICAL CONTINUITY TEST (REPEATED)

Following the tests described in 3.6.3.2, the same assemblies shall be subjected to the following electrical continuity test.

a. *Method*

The tightness of the connectors in the threaded couplings shall be rechecked and brought back to the original tightening torque specified in 3.6.2.2 where necessary. However, no adjustment shall be made between the cable and connector. The assembly shall then be subjected to the electrical continuity test described in 3.6.3.1.

b. *Evaluation*

This test shall fail if the assemblies do not remain intact, if the fitting can be separated from the cable by slightly bending or flexing the cable, or if there is evidence of movement of the cable with relation to the connector during or after the test.

3.6.3.4 PULL-OUT TEST

Following the tests described in 3.6, the same assemblies shall be subjected to the following pull-out test.

a. *Method*

The pull specified in UL514B paragraph 42.2 shall be applied between the connector and the cable for a period of 5 minutes in a direction that is intended to pull the cable directly out of the connector.

b. *Evaluation*

This test shall fail if the assemblies do not remain intact, if the fittings can be separated from the cable by slightly bending or flexing the cable, or if there is evidence of movement of the cable with relation to the connector during or after the test.

3.6.4 Ground Fault

Fittings for metal-clad cable shall be designed to conduct any anticipated ground fault current likely to be imposed on them.

3.6.5 Marking

The smallest unit carton shall be marked with the outside dimension range and type of cable for which the fitting is suitable.

3.7 MINERAL-INSULATED METAL-SHEATHED (MI) CABLE FITTINGS

3.7.1 Conductor Separation and Sealing

A fitting for mineral-insulated metal-sheathed cable shall be provided with means for separation of the cable conductors and, except as noted in 3.7.11, for sealing the end of the cable against the entrance of moisture.

3.7.2 Flexible Insulating Tubing

Suitable flexible insulating tubing having a minimum wall thickness of 0.020 inch (0.51 mm) shall be provided with each fitting. The inside diameter of the tubing shall be such that the tubing can be slipped easily over the bared conductors of cable of the largest AWG size for which the fitting is intended. At least 6 inches (152.4 mm) of tubing shall be provided for each cable conductor.

3.7.3 Material Compatibility

If insulating materials of different compositions are used with the same fitting, the material shall be compatible. See 3.7.11.

3.7.4 Test Sequence and Samples

Fittings for mineral-insulated metal-sheathed cable shall be subjected to the requirements in 3.7.5 through 3.7.13. Except as noted in 3.7.6a, a minimum of six samples of each design shall be tested. The test sequence shall be the electrical continuity test described in 6.9 and 3.7.6 followed by the bend test in 3.7.7, and pull tests in 3.7.8. The same samples shall be used for the three tests without conditioning between tests.

In view of the range of conductor sizes available in mineral-insulated, metal-sheathed cable, and the variations in the number of conductors per cable size, it is not practical to test each fitting for every variation.

3.7.5 Sample Assembly

Fittings equipped with a gland nut shall be tightened with the torque indicated in Table 6-1 for threadless fittings corresponding to the trade size of the knockout into which the fitting is to be inserted. A fitting provided with a setscrew shall be tightened with a torque of 35 pound-inches (3.96 N.m), except that a No. 8 screw shall be tightened with a torque of 20 pound-inches (2.26 N.m). Bolt-head screws (unslotted, direct-bearing, or securing a clamp) shall be wrench tightened with a torque of 160 pound-inches (18.10 N.m).

The manufacturer's installation instruction should be followed in assembling fittings for the tests.

3.7.6 Electrical Continuity

The fittings shall meet the requirements of the electrical continuity test described in 6.9.

3.7.6.1 INSULATION RESISTANCE TEST NO. 1

When tested as follows, the insulation resistance of a two-conductor 14 AWG or smaller cable shall not be decreased appreciably as a result of the installation of a fitting providing means for sealing the cable end and shall be at least 1,000,000 ohms after 3 hours of immersion and at least 250,000 ohms after 30 days of immersion.

Copyright National Electrical Manufacturers Association
Provided by IHS under license with NEMA
No reproduction or networking permitted without license from IHS
Not for Resale

a. Two 11-foot (3.352 meters) lengths of cable shall be stripped of the outer sheath and mineral fill for 6 inches (152.4 mm) at each end, and a fitting with insulating sleeving shall be installed at one end of each cable.

b. If the cable is coiled for this test, the inside diameter of the coil shall not be less than ten times the outside diameter of the cable.

c. The cable with its fitting shall then be immersed under ordinary tap water, at room temperature, with the bared ends of the end without the fitting above the water. The end of the cable without the fitting shall be sealed to prevent the mineral insulation from absorbing moisture from the air.

d. The insulation resistance between the conductors and between the conductors and the outer cable sheath shall be measured: before the cable fitting has been installed; after the fitting has been installed but before the assembly has been immersed in water; after the assembly has been immersed in water for 3 hours; and after the assembly has been immersed in water for 30 days.

3.7.6.2 INSULATION RESISTANCE TEST NO. 2

When tested as follows, the insulation resistance of a two-conductor 14 AWG or smaller cable and fitting, provided with a means of sealing the end of the cable, shall be at least 250,000 ohms after 14 days of immersion in water at a temperature of 50°C.

a. Two 6-foot (1.83 meters) lengths of cable shall be used.

b. The outer sheath and mineral fill shall be stripped from approximately 30 inches (762 mm) at each end and a fitting installed at each end of the remaining 1-foot (304.8 mm) center section. The bared conductor shall be installed with approximately 30 inches (762 mm) of the flexible tubing supplied with the fitting.

c. The entire assembly, except for the bared ends of the conductors at the end of the flexible tubing, shall be immersed under a 1-foot (304.8 mm) head of ordinary tap water maintained at 50°C.

3.7.6.3 TEST POTENTIAL

The cable and fitting assemblies used in the insulation resistance tests, described in 3.7.6.1 and 3.7.6.2 shall withstand a potential of 1500 volts alternating current for 1 minute. The test shall be conducted on the samples immediately following the insulation resistance tests described in 3.7.6.1 and 3.7.6.2. The potential shall be applied first between conductors, and then between all conductors connected together and the outer sheath. Samples shall be removed from the water for this test and wiped dry on the outside. The potential shall be increased gradually from 0 to 1500 volts.

3.7.7 Bend Test

The assembly of the fitting and cable shall not loosen when the cable is bent as follows.

a. The fitting shall be connected to a solidly mounted box or equivalent connection point with the axis of the cable in line with the axis of the fitting.

b. The cable shall be bent around a wooden form having a radius equal to five times the diameter of the cable.

c. The cable shall be grasped at a point 2 feet (609.6 mm) from the fitting and bent in one direction so that a 90-degree bend is formed. The cable shall then be bent 180 degrees in the opposite direction, and then back to its original position in line with the axis of the fitting.

3.7.8 Pull Test

The assembly of the fitting and cable shall remain intact when subjected to a direct pull of 150 pounds (677 N) for 5 minutes between the cable and the fitting.

3.7.9 Sealing

If a fitting does not have a means for sealing the end of the cable as a part of the fitting, it shall be designed for use with a separate sealing fitting. When properly assembled to mineral-insulated metal-sheathed cable, the fitting shall not permit the entrance of water as a result of the test described in 6.3. Previously untreated samples shall be used for this test. The samples shall be tested with the assembly in any position that is likely to be encountered in service. See 3.7.10.

3.7.10 Dry Location Fitting Markings

A fitting intended for use only in dry locations shall be clearly marked "Dry Locations Use," or the equivalent. The marking shall be an integral part of the fitting and shall be embossed or die-stamped on the outer surface of the fitting in a location where it will be visible after installation. Such fittings need not comply with the requirements of 3.7.9.

3.7.11 Durability of Sealing Parts

The complete assembly, including any sealing compound and insulating tubing, shall be placed in a circulating air oven and maintained at 92°C ±1°C for 60 days.

Copyright National Electrical Manufacturers Association
Provided by IHS under license with NEMA
No reproduction or networking permitted without license from IHS
Not for Resale

The parts provided for sealing the end of the cable and for insulating the cable conductors shall show no undue deterioration and shall not adversely affect each other after exposure to air at a temperature of 92°C ±1°C for 60 days.

3.7.12 Internal Rubber or Rubber-Like Parts

Internal rubber or rubber-like parts of a fitting shall be tested in accordance with 6.10.

3.7.13 Ground Fault

Fittings for mineral-insulated metal-sheathed cable shall be designed to conduct any anticipated ground fault current likely to be imposed on them.

3.8 (RESERVED)

3.9 LIQUID-TIGHT FLEXIBLE NONMETALLIC CONDUIT FITTINGS

3.9.1 Liquid-Tight Flexible Nonmetallic Conduit Fittings

Fittings for liquid-tight flexible nonmetallic conduit shall meet the requirements of 3.10, except 3.10.5.2, 3.10.5.4, and 3.10.6.

3.9.2 Nonmetallic Material

A fitting made of non-metallic material shall be subjected to the flame test described in 6.8.1, except that the valve supplying the gas is to be opened for five seconds and closed for five seconds in each of the five applications of the flame. The fitting shall be tested as received, and after being conditioned for seven days at a temperature of 90°C ±1°C in an air circulating oven. Previously untested fittings shall be used for each test condition. The fitting shall not:

a. Support combustion for more than one minute after the final application of the test flame
b. Be consumed

There shall be no visible flame on the surface of the fitting opposite of the surface to which the test flame is applied.

3.9.3 Flame Test Repetition

The test described in 3.9.2 shall be repeated on previously untested fittings except that the test flame is to be adjusted to have a yellow flame 3/4-inch (19.05 mm) high with no blue inner cone, and there are to be two 30-second applications of the test flame with a 60-second interval between applications. The test flame shall be applied vertically to the interior of the fitting.

3.10 LIQUID-TIGHT FLEXIBLE METAL CONDUIT FITTINGS

3.10.1 End Stop

Fittings for liquid-tight flexible metal conduit shall be provided with a smooth well-rounded end stop that will completely encircle the end of the conduit.

3.10.1.1 APPLICATION OF END STOP

The smooth end stop shall be provided by the body of the fitting or by a separate part applied over the cut end of the conduit.

3.10.1.2 CONDUIT CROSS-SECTION REDUCTION

Any part of the fitting inserted into the conduit to assist in providing a smooth throat, a bond between fitting and conduit, or assembly to the conduit shall not reduce the diameter of the usable inside cross section of the conduit by more than fifteen percent.

3.10.2 Rain Test

The assembly of a fitting to the conduit shall meet the rain test requirements of 6.3. Previously untested samples shall be used with the assembly in any position likely to be encountered in service. Only one such test shall be conducted on any one sample.

3.10.3 Pull Test

The assembly of the fitting and conduit shall be subjected to a direct pull of 150 pounds (667N) for 5 minutes and shall remain intact.

3.10.4 Flexible Sleeve

If a fitting utilizes a flexible sleeve or ring to comply with 3.10.2, the material shall meet the following requirements.

3.10.4.1 ELASTOMERIC MATERIAL

If the sleeve or ring is of an elastomeric material, the material shall meet the requirements of 6.10.

3.10.4.2 THERMOPLASTIC MATERIAL

If the sleeve or ring is of a thermoplastic material, an assembly made in accordance with 3.10.1 shall be aged for 7 days in a circulating air oven at 100°C. The assembly shall be subjected to a direct pull of 150 (667N) pounds for 5 minutes and shall remain intact. This test permits the use of the same samples used for the test described in 3.10.2.

3.10.4.3 TENSILE STRENGTH

If the sleeve or ring fits over the outside of the conduit jacket and is exposed after it is installed on the conduit, the tensile strength of the material used for the sleeve shall not decrease more than 25 percent and the elongation shall not decrease more than 35 percent as a result of the test described in 6.10.

3.10.4.4 MINERAL OIL EFFECT

The sleeve or ring shall be exposed to mineral oil for 18 hours at 70°C ±1°C. The tensile strength and elongation shall not decrease more than 40 percent.

Copyright National Electrical Manufacturers Association
Provided by IHS under license with NEMA
No reproduction or networking permitted without license from IHS
Not for Resale

3.10.5 Grounding and Non-Grounding Fittings

Fittings for liquid-tight flexible metallic conduit shall be subjected to the requirements of 3.10.5.1 through 3.10.5.4. In addition fittings of the grounding type shall be designed to conduct any anticipated ground fault current likely to be imposed on them.

3.10.5.1 ASSEMBLY

In assembling the fittings for tests, a fitting with a gland nut shall be tightened with the torque given in Table 6-1 for threadless fittings, except that the tightening torque for a 3/8-inch trade size fitting shall be 235 pound-inches (26.6 N.m). A fitting that can be tightened with a screwdriver shall be tightened with a torque of 35 pound-inches, (3.96 N.m) except that a No. 8 screw shall be tightened with a torque of 20 pound-inches (2.26 N.m). A bolt-headed screw (unslotted, direct bearing, or securing a clamp) shall be wrench tightened with a torque of 160 pound-inches (18.10 N.m).

All samples shall be assembled to liquid-tight flexible metal conduit, of the intended trade size, in the manner recommended by the manufacturer. For those samples to be tested in accordance with 3.10.5.3, the conduit shall be 10 feet (3.048 meters) in length.

If unusual assembly techniques are required, suitable instructions for proper assembly should be provided with the fittings when shipped from the factory.

3.10.5.2 ELECTRICAL CONTINUITY

A current of 30 amperes direct current, in accordance with 6.9, flowing through the connection between a fitting and two lengths of conduit or conduit and a box, shall not result in a voltage drop of more than 50 millivolts. The voltage drop shall be measured between the two points in accordance with 6.9. See also 3.10.5.4.

3.10.5.3 VIBRATION

The fitting shall be subjected to the vibration test in 3.4.6.2.

3.10.5.4 ELECTRICAL CONTINUITY TEST (REPEATED)

Following the vibration test, fittings shall comply with the requirements of 3.10.5.2.

3.10.6 Marking

Fittings for 1-1/2-, 2-, 2-1/2-, 3-, 3-1/2-, and 4-inch trade sizes of liquid-tight flexible metal conduit of the grounding type shall be marked to indicate that they are of the grounding type, or the carton or other container in which the fitting is packaged shall be marked to indicate that they are grounding-type fittings.

3.11 (RESERVED)

3.12 BUSHINGS

3.12.1 General Requirements

Bushings shall be one of the following types.

a. Insulating bushing (nonmetallic)
b. Insulated bushing (metallic collar with insulated shoulder)
c. Insulating liner (used in the throat of box connector fittings)
d. Outlet bushing (metallic or nonmetallic collar with an insulating material cover having holes for the individual conductors)
e. Non-insulating bushing (metallic)

Bushings and liners (except outlet bushings) for rigid conduit shall have a smooth, well rounded surface at the throat. The throat diameter shall be within the limits given in Table 2-6. A threaded bushing shall be provided with the ribs or the equivalent to permit easy tightening.

3.12.2 Thermoplastic or Thermosetting Materials

If all of a bushing or the throat of a bushing is made of a thermoplastic insulating material:

a. The material shall meet the requirements of the flame test described in 6.8, using a test specimen 4 inches square and of a thickness equal to the minimum thickness of the bushing or throat.
b. The bushing or throat shall not be completely consumed when a sample of the bushing is mounted on a 1-foot length of conduit and suspended at an angle of 45 degrees to the axis of the test flame. The tip of the inner blue cone of the flame shall be applied to the upper edge of the inner diameter of the bushing.

   Exception: A bushing or throat of a bushing that is made of a material that has been investigated and found to comply with the requirements in UL 94. This standard is for materials designated as 94V-0, 94V-1, or 94V-2.

   Exception: A bushing of the type for use in boxes or other enclosures.
c. A bushing or throat shall be assigned a temperature rating in accordance with the test described in 6.11.

3.12.3 Grounding and Bonding Bushings

Metallic bushings of the grounding or bonding type, or both, shall meet the construction and test requirements of 3.12.1 and 3.12.2 and ANSI/UL 467.

Copyright National Electrical Manufacturers Association
Provided by IHS under license with NEMA
No reproduction or networking permitted without license from IHS
Not for Resale

3.13 GROUND CLAMPS

Ground clamps shall meet the construction requirements of ANSI/UL 467.

3.14 FITTINGS FOR CLOSURE OF OPENINGS

3.14.1 Closures

A plug or plate, threaded or otherwise, for closing an opening in a box or enclosure shall be of metal or other suitable material that complies with 3.14.2 through 3.14.10.

3.14.2 Thickness

The thickness of a sheet steel plug or plate used to close an unused opening in a metal box or enclosure shall not be less than 0.026 inches (0.66 mm) for diameters up to 1-1/4 inches (31.75 mm). For diameters greater than 1-1/4 inches (31.75 mm) the thickness of a steel plug or plate shall not be less than 0.054 (1.38 mm)inches. The thickness of aluminum plugs or plates shall not be less than 0.091 inches (2.31 mm) for any diameter.

3.14.3 Laminated Closures

If a plug or plate as mentioned in 3.14.2 is laminated, the total thickness shall not be less than 0.054 inches (1.38 mm). The construction of a plug or plate employing a securing screw shall be such that the closure will be effective even though the screw becomes slightly loosened.

3.14.4 Cast Metal Thickness

The thickness of a cast-metal plug for closing an opening in a box or enclosure shall not be less than 1/16 inch (1.6 mm), if of die-cast zinc, die-cast aluminum, or malleable iron, and shall not be less than 1/8-inch (3.2 mm), if of sand-cast aluminum or cast iron.

3.14.5 Nonmetallic Plug

A nonmetallic plug used to close an unused opening in a box or enclosure shall maintain the integrity of the enclosure in which it is installed when subjected to the test described in 6.8. The plug shall be installed as intended in the opening of a metal box or enclosure for this test.

3.14.6 Rubber or Elastomeric Material

A plug of rubber or other elastomeric material shall comply with the aging requirements of 6.10.

3.14.7 Performance of Nonmetallic Closures

A nonmetallic plug or other closure that does not require a locknut and that is intended to be assembled to a box or enclosure surface shall not be damaged or its effectiveness impaired when installed as specified in 3.14.8 and after each of the conditions specified in 3.14.9.

3.14.8 Thickness of Sheet Metal

The test described in 3.14.7 shall be performed with sheet steel 0.026 (0.66 mm) inches in thickness and sheet aluminum 0.091 inches (2.31 mm) in thickness.

3.14.9 Test Samples

No fewer than 18 samples of each plug or other closure, specified in 3.14.7 shall be tested. No fewer than six of these samples shall be in each of the following conditions for testing:

a. As received
b. Either one of the following:
   1. At room temperature after exposure for 168 hours to circulating air at a temperature of 90°C ±1°C for thermoset and thermoplastic materials
   2. After aging in accordance with 6.10 for elastomeric or rubber-like materials
   3. Immediately after exposure for 24 hours to circulating air at a temperature of -20°C ±2°C

3.14.10 Closure Plug

A closure plug shall not be removed by a force of 10 pounds (44.5 N) applied in a direction most likely to dislodge it from the installations specified in 3.14.8. If the plug is of a nonmetallic material, it shall be tested before and after conditioning for a period of seven days at 90°C ±1°C. The force shall be applied with a 1/4-inch (6.35 mm) diameter flat-end mandrel.

3.15 (RESERVED)

3.16 SERVICE ENTRANCE CABLE FITTINGS (SE AND USE)

3.16.1 Secureness

A connector shall secure the cable so that it will withstand a steady pull of 50 pounds (222 N) for 5 minutes and so that the cable cannot be readily removed by bending or flexing. The conductors shall project approximately 6 inches (152.4 mm) into the connector being tested. A screw that can be tightened with a screwdriver shall be tightened with a torque of 35 pound-inches (3.96 N.m), except that a No. 8 screw shall be tightened with a torque of 20 pound-inches (2.26 N.m) unless a different torque is specified by the manufacturer. A gland nut shall be tightened with the torque given in Table 6-1 for threadless fittings corresponding to the trade size of the threaded portion of the connector. The assembly shall be mounted in a box in the intended manner. The pull shall be applied between the cable and the box.

Copyright National Electrical Manufacturers Association
Provided by IHS under license with NEMA
No reproduction or networking permitted without license from IHS
Not for Resale

3.16.2 Rain-Tight Connectors

Rain-tight connectors shall meet the requirements given in 6.3.

3.16.3 Elastomeric Components

Elastomeric components of a connector shall meet the requirements of 6.10.

3.16.4 Thermoplastic Components

Thermoplastic components of a connector shall meet the requirements of 6.11.

3.17 SERVICE ENTRANCE HEADS (CAPS AND HOODS)

3.17.1 End Stops for Service Entrance Heads

3.17.1.1 A service entrance head for use on either rigid metal conduit, intermediate metallic conduit, or electrical metallic tubing shall meet the requirements of 6.3 and shall have an integral end stop for the conduit or tubing to provide a smooth well rounded opening. Except as noted in 3.17.1.2, the opening shall have an internal diameter equivalent to that provided by the throat of a conduit bushing as indicated in Table 2-6.

3.17.1.2 A service-entrance head for use on over-size conduit (conduit of a size larger than that corresponding in size to the other parts of the head) may have an end stop with an internal diameter of the maximum size indicated in Table 2-6 for the size of conduit on which it is intended to be installed. No minimum internal diameter of the end stop is specified for such a head.

3.17.2 Removable Parts

If a service-entrance head intended for use on rigid metal conduit, intermediate metal conduit, or electrical metallic tubing, is provided with a removable part that is intended to be discarded when the head is assembled to rigid conduit, the removable part shall be so secured that it will not inadvertently separate from the head during handling or shipment.

3.17.3 Assembly

A service-entrance head intended for use on rigid metal conduit, intermediate metal conduit, or electrical metallic tubing shall be installed as intended on both raceways to determine that the end stop will be effective as a bushing for the conductors. The edge of the stop shall extend at least to the inside edge of either raceway around the entire circumference.

3.17.4 Openings

A service-entrance head shall not have more than three open holes of which not more than one is uninsulated.

3.17.5 Cable Protection

A service-entrance head or hood for service-entrance cable shall protect the open end of the jacket or braid of the cable from the entrance of rain and shall have suitable means for mounting and clamping the cable.

3.17.6 Continuity Test

A metallic service-entrance head or hood shall meet the electrical continuity test described in 6.9.

Except as noted herein, the fitting shall be assembled to the conduit or tubing as intended, applying the tightening torque for threadless fittings given in Table 6-1. A fitting that can be tightened with a screwdriver shall be tightened with a torque of 35 pound-inches (3.96 N.m), except that a No. 8 screw shall be tightened with a torque of 20 pound-inches (2.26 N.m). A bolt-head screw (unslotted, direct bearing, or securing a clamp) shall be wrench tightened with a torque of 160 pound-inches (18.10 N.m).

3.18 SILL PLATES

3.18.1 Cable Protection

A sill plate for service entrance cable shall protect the cable where it enters the building and shall aid in preventing entry of water into the building.

3.18.2 Drainage

A sill plate shall meet the requirements specified in 2.2 and 2.3, as applicable. A sill plate shall be provided with a means for drainage.

3.18.3 Sealing Compound

Sealing compound should be used to prevent the entry of water into the building.

Copyright National Electrical Manufacturers Association
Provided by IHS under license with NEMA
No reproduction or networking permitted without license from IHS
Not for Resale

Section 4
REQUIREMENTS FOR CAST METAL BOXES AND CONDUIT BODIES

4.1 GENERAL

4.1.1 Applicability

The requirements in Section 4 apply to all cast metal boxes, conduit bodies, and covers within the scope of this standard. They are supplemented or modified by requirements for specific types in Section 5.

4.1.2 Function

Cast metal boxes and conduit bodies for use with raceway systems or with cable assemblies, or with both, to distribute power in an electrical system shall provide one or more of the following.

a. Means of connecting or terminating conduit or cable assemblies, or both
b. Physical protection for the conductors during and after the installation
c. Electrical continuity and the capacity to conduct safely any fault current likely to be imposed on them in accordance with Article 250 of the *National Electrical Code*
d. Prevention of personnel coming into contact with energized conductors which are part of a wiring system or cable assembly, or both
e. Containment of a fault and the effects of a fault within a metallic raceway system, thereby aiding in the prevention of fire from arcing faults
f. Protection against the particular environment
g. Means for mounting wiring devices or other electrical equipment

4.2 METALLIC MATERIALS

4.2.1 Wall Thickness

Boxes and conduit bodies shall have a wall thickness not less than 1/8 inch (3.2 mm), except that a wall of a malleable-iron or a die-cast or permanent mold-cast aluminum, brass, bronze or zinc box or conduit body shall not be less than 3/32 inch (2.4 mm) thick or 1/16 inch (1.6 mm) thick for those areas of pull or junction boxes not exceeding 24 square inches (154.8 cm^2) or 6 inches (152.4 mm) in any dimension.

Exception: Listed boxes and conduit bodies shown to have equivalent strength and characteristics shall be permitted to be made of thinner or other metals.

4.2.2 Zinc Die Castings

Zinc Die Castings shall meet the minimum requirements for die castings AG40A and AC41A given in ASTM B86.

4.2.3 Coatings on Metallic Surfaces

Coatings on metallic surfaces, if applied, shall comply with 2.2.3.

4.2.4 Corrosion Protection

4.2.4.1 FERROUS METALS

4.2.4.1.1 All surfaces of ferrous metal boxes and conduit bodies, all attached ferrous metal parts including screws, and all ferrous metal covers shall be protected against corrosion. A zinc or equivalent coating on an exterior surfaces shall have an average thickness not less than 0.00015 inch (0.0038 mm) and a minimum thickness not less than 0.00010 inch (0.0025 mm). A zinc or equivalent coating on an exterior surface shall have an average thickness not less than 0.00050 inch (0.0130 mm) and a minimum thickness of not less than 0.00040 inch (0.0102 mm).

Exceptions:

a. Stainless steel of an austenitic, 8 percent chromium, 8 percent nickel type
b. Cut edges and punched holes in a surface formed from galvanized stock and the threaded surfaces of tapped holes.
c. The thickness on spot or projection welds, on screws, on interior surfaces not able to be contacted by a 1/8-inch (19.6 mm) diameter ball, and on the surfaces of cast iron or malleable iron is not specified, but the presence of a protective coating shall be determined by visual inspection.
d. Other types of coatings shall be acceptable for the purpose as determined by investigation.

4.2.4.1.2 The average thickness shall be determined by averaging a minimum of three readings, on three different surfaces if possible. If the readings are taken on the same surface, the locations at which these readings are taken shall be equally spaced along that surface.

4.2.4.1.3 Unless it is obvious that one surface of a cover is intended for use only on the side toward the interior, both surfaces shall be provided with corrosion protection as required for exterior surfaces.

4.2.4.1.4 The outside of a cast aluminum box that is intended for use in concrete or cinder fill shall be coated with asphalt-base paint, two coats of baked enamel, or the equivalent.

Copyright National Electrical Manufacturers Association
Provided by IHS under license with NEMA
No reproduction or networking permitted without license from IHS
Not for Resale

4.3 (RESERVED)

4.4 CONDUIT ENTRIES

4.4.1 Threaded Entry Construction

A threaded conduit entry shall conform to either 4.4.1.1 or 4.4.1.2.

4.4.1.1 THROUGH-TAPPED HOLES

a. A threaded hole for connection to conduit that is tapped completely through the wall of a box shall have at least 3 full threads.

b. The construction shall permit the proper attachment of a conduit bushing to wrench-tightened conduit.

c. The wall thickness in an area where tapped holes are provided or intended for field drilling and tapping shall comply with Table 4-1.

d. Threads for factory-threaded entries shall comply with 7.1.1 as well as 4.4.1.1.

e. For field threading, standard NPT taps and chasers are recommended.

Table 4-1
MINIMUM WALL THICKNESS AT TAPPED HOLES FOR CONDUIT

Conduit Trade Size Designator	Metric Size Designator	Minimum Thickness, Inches (mm)
1/2–3/4	16-21	7/32(1/4*) (5.54 [6.35*])
1–2	27-53	17/64 (6.75)
2-1/2–6	63-155	3/8 (9.53)

*Suggested Standard for Future Design.

4.4.1.2 ENTRIES WITH INTEGRAL BUSHINGS

a. The integral bushing shall have a smooth, well rounded surface with an inside throat diameter complying with Table 2-6.

b. The threaded entry shall have at least three full threads.

c. Threads shall comply with 7.1.

d. An internal recess shall be permitted between the integral bushing and the threaded portion of the entry.

Note. This type of entry may be configured as an integral hub, either external or internal, or as a thick-walled entry.

4.4.2 Threadless Connections

An entry into a box or conduit body intended for connection to threadless rigid metal conduit, threadless intermediate metallic conduit, or electrical metallic tubing shall be subjected to the electrical continuity and mechanical strength tests in 3.3.1.

4.5 OPENINGS

Boxes and conduit bodies with covers, when assembled as intended, shall have no substantial openings.

4.6 CLASSIFICATIONS

4.6.1 Rain-, Oil-, Concrete-Tight

Boxes and conduit bodies classified as rain-tight, oil-tight, or concrete-tight shall comply with the Rain Test in 6.3, the Oil Test in 6.6, or the Concrete Test in 6.7, respectively.

Exception: Boxes classified as rain-tight and/or oil-tight shall be considered concrete tight.

4.6.2 NEMA Types

Boxes and conduit bodies may have NEMA Type enclosure designations in accordance with NEMA Standards Publication No. 250.

4.7 MARKING

4.7.1 Manufacturer's Identification

A box, conduit body, and a separately shipped cover shall be plainly marked with the manufacturer's name, trademark, or other descriptive marking by which the organization responsible for the product can be identified and, if practicable, with a catalog number or an equivalent designation. The catalog number or an equivalent designation, if not marked on the product, shall appear on the carton or other container in which the product is packaged.

4.7.2 Grounding

A metal box that is provided with a tapped hole for a grounding screw other than a No. 10-32 shall be marked "GR" or "GRD," or the equivalent, adjacent to the hole.

4.7.3 Volume

A box having a volume of 100 cubic inches (1639 cm^3) or less and a conduit body having provision for more than two tubing or conduit entries or having provision for mounting wiring devices, an extension ring, or a raised cover shall be durably and legibly marked with a volume in cubic inches that does not exceed its actual volume. The marking shall be reduced to the nearest 1/4 cubic inch, except that the use of 0.3 (4.92 cm^3)for 1/4 and 0.8 (13.11 cm^3) for 3/4 shall be permitted.

Exception: Single-cover FS boxes having a minimum volume of 13.5 cubic inches (221.27 cm^3), per gang, multicover FS boxes having a minimum volume of 18.0 cubic inches per gang, single-cover FD boxes having a minimum volume of 18.0 cubic inches (295.02 cm^3) per gang and multicover FD boxes having a minimum volume of 24 cubic inches (393.36 cm^3) per gang (See 5.2.2.3.).

4.7.4 Conduit Bodies

A conduit body that has been investigated for a specific combination of conductors shall be permanently marked with the maximum number and maximum size of the conductors for which it is intended.

Copyright National Electrical Manufacturers Association
Provided by IHS under license with NEMA
No reproduction or networking permitted without license from IHS
Not for Resale

Exceptions:

a A 1/2-inch trade size conduit body

b. A conduit body marked for use only with No. 6 AWG or smaller conductors

c. Conduit bodies complying with 5.5.3.1

4.7.5 Specific Conditions

For a box or assembly that has been found acceptable for specific conditions of installation or use with certain wiring systems, such condition of installation or intended use shall be indicated by a marking on the smallest unit carton in which the product is packed.

4.7.6 Wet and Damp Locations

4.7.6.1 An outlet box, a conduit body, an outlet box cover, and a flush device cover plate acceptable for use in a wet location shall be marked "Wet Locations" and shall also be permitted to be marked "Damp Locations."

4.7.6.2 An outlet box, a conduit body, an outlet box cover, and a flush device cover plate acceptable for use in a wet location with the cover closed shall be marked "Wet Location Only When Cover Closed," and shall also be permitted to be marked "Damp Locations."

4.6.7.3 An outlet box, a conduit body, an outlet box cover, and a flush device cover plate acceptable for use in a damp location shall be marked "Damp Locations."

4.6.7.4 The markings indicating damp locations, wet location with cover closed, or wet location, shall be visible after installation.

Copyright National Electrical Manufacturers Association
Provided by IHS under license with NEMA
No reproduction or networking permitted without license from IHS

Not for Resale

Copyright National Electrical Manufacturers Association
Provided by IHS under license with NEMA
No reproduction or networking permitted without license from IHS

Not for Resale

Section 5
SPECIFIC REQUIREMENTS FOR CAST METAL BOXES AND CONDUIT BODIES

5.1 TYPES

All cast metal boxes and conduit bodies shall meet the applicable general requirements in Section 4 and shall meet the specific detailed requirements applicable to the types listed below.

5.1.1 Device Boxes (FS and FD) and covers—5.2

5.1.2 Outlet Boxes and covers—5.3

5.1.3 Junction and pull boxes and covers—5.4

5.1.4 Conduit bodies and covers—5.5

5.2 DEVICE BOXES (FS AND FD) AND COVERS

5.2.1 Boxes

FS and FD boxes shall meet the applicable requirements of Section 4.

5.2.2 Box Dimensions

5.2.2.1 MINIMUM FACE OPENING

Figure 5-1 illustrates a suggested standard for future design of the minimum box face opening of cast metal device (FS and FD) boxes.

5.2.2.2 BOX FACE CONFIGURATION

The configuration of single gang FS and FD boxes and multigang FS and FD boxes that use single-gang covers shall conform to Figure 5-2.

5.2.2.3 INTERNAL DEPTH

The internal depth shall not be less than 1-3/4 inches (44.55 mm) for FS boxes and not less than 2-3/8 inches (60.33 mm) for FD boxes, unless marked with their cubic inch capacity. (See 4.7.3.)

5.2.3 Device Boxes (FS and FD) Covers

5.2.3.1 Covers that support wiring devices shall meet the requirements of 5.3.2.

5.2.3.2 Covers that are supported by wiring devices, device enclosures, or blank device box covers shall comply with the following. A metal cover or closure shall be as follows.

a. Steel not less than 0.030 inch (0.76 mm) thick

b. Copper alloy, aluminum, or die-cast zinc not less than 0.040 inch (1.02 mm) thick

c. Other equivalent material.

Exception: Covers and closures where formed or reinforced to provide adequate mechanical strength and suitability for the environment shall be permitted to be of lesser thickness.

5.2.3.3 Except as indicated in paragraphs a, b, and c below, an FS and FD box cover shall have no open holes.

a. No more than four holes per gang shall be provided for mounting a cover to a box.

b. A hole in an FS and FD box cover designed to permit the passage of a flexible cord shall have a smooth well rounded surface or shall be provided with an insulating bushing.

c. Openings for devices

5.3 OUTLET BOXES AND COVERS

5.3.1 Boxes

Outlet boxes shall meet the applicable requirements of Section 4.

5.3.2 Covers

5.3.2.1 Except as indicated in paragraph 5.3.2.2, cast metal covers shall be constructed in the same thicknesses as those specified for boxes and conduit bodies in 4.2.1.

5.3.2.2 The thickness of cast metal covers, other than malleable iron, die-cast or permanent mold cast metal, shall be permitted to be less than that required by 5.3.2.1, but not less than 3/32 inch (2.4 mm) if the cover is lined with firmly attached insulating material not less than 1/32 inch (.79 mm) thick.

5.3.2.3 A sheet steel cover shall be made from material at least 5/8 inch (15.88 mm) thick.

5.3.2.4 A cover of sheet aluminum alloy having a tensile strength not less than 17,000 psi (117.3 MPa) shall not be less that 0.091 inch (2.31 mm) thick.

Copyright National Electrical Manufacturers Association
Provided by IHS under license with NEMA
No reproduction or networking permitted without license from IHS
Not for Resale

5.3.2.5 Except as indicated in paragraphs a, b, c below, an outlet box cover shall have no open holes.

a. No more than four openings shall be provided for mounting a cover to a box.

b. A hole in an outlet box cover designed to permit the passage of a flexible cord shall have a smooth, well rounded surface or shall be provided with an insulating bushing.

c. An outlet box cover provided with a tapped hole for connection to a wiring system shall conform to 4.4.

5.3.2.6 Weatherproof device covers for FS and FD type boxes shall be so designed to permit the proper closure of protective lids over devices with which their use shall be permitted.

The devices with which their use shall be permitted shall be those illustrated in NEMA Standards Publication WD 6 whose dimensions permit assembly to the cover/box combination.

Exceptions:

a. Covers furnished with devices

b. Covers externally marked to indicate the specific device(s) with which their use shall be permitted.

Note: GFCI receptacles are not within the scope of NEMA Standard WD 6, however all are currently made to the rectangular face device dimensions of NEMA Standard WD 6 except that their maximum reset button height is 0.500 inches (12.7 mm) rather than the 0.883 inches (22.4 mm) shown in WD 6.

5.4 JUNCTION AND PULL BOXES AND COVERS

5.4.1 Box Dimensions

A junction or pull box having provision for connection of conduit or tubing 3/4 (21) trade size or larger shall comply with either 5.4.1.1 or 5.4.1.2.

5.4.1.1 The distance between opposite walls, each containing a raceway entry, shall be not less than eight times the trade diameter of the largest raceway entry in such walls.

The distance between each raceway entry and opposite wall of the box shall be at least six times the trade diameter of the largest raceway that can be connected to it plus the sum of the trade diameters of all other entries in the same wall, except that, where a raceway entry is in a wall opposite the removable cover, the distance from the wall to the cover shall be permitted to be at least that specified in Table 5-1.

5.4.1.2 A box having dimensions less than those required in 5.4.1.1 shall be marked with the following: "Note: When used as a pull box, installation shall be in accordance with Article 370-18 of the National Electrical Code."

Table 5-1
DISTANCE FROM REMOVABLE COVER TO OPPOSITE WALL WITH RACEWAY OPENING

Trade Size Designator	Metric Size Designator	Trade Diameter Inches (mm)	Minimum Distance Wall to Cover, Inches (mm)
3/4	21	.750 (19.05)	2 (50.80)
1	27	1.00 (25.40)	2-1/2 (63.50)
1-1/4	35	1.250 (31.75)	3-1/2 (88.90)
1-1/2	41	1.50 (38.10)	4 (101.60)
2	53	2.00 (50.80)	5 (127.00)
2-1/2	63	2.50 (63.50)	6 (152.40)
3	78	3.00 (76.20)	8 (203.20)
3-1/2	91	3.50 (88.90)	8 (203.20)
4	103	4.00 (101.60)	10 (254.00)
5	129	5.00 (127.00)	12 (304.80)
6	155	6.00 (152.40)	12 (304.80)

5.4.2 Covers

Cast metal covers shall be constructed in the same thicknesses as specified in 4.2.1 for the walls of boxes of the same material.

5.5 CONDUIT BODIES AND COVERS

5.5.1 Provision for Mounting Devices

5.5.1.1 A conduit body having a volume exceeding 100 cubic inches (1639 cm^3) shall have no provision for mounting switches, fuseholders, or other control devices.

5.5.1.2 A conduit body having a volume of 100 cubic inches (1639 cm^3) or less shall be permitted to have provision for mounting a wiring device if it meets either of the following conditions.

a. The conduit body has three or more conduit entries.

b. The conduit body has less than three conduit entries and is identified with its volume in cubic inches.

5.5.2 Cross-Sectional Area

A conduit body shall have a cross-sectional area not less than twice the cross-sectional area of the largest tubing or conduit that may be attached to it, unless it is marked for use only with No. 6 AWG or smaller conductors.

5.5.3 Dimensions

Unless marked for use only with No. 6 AWG or smaller conductors in accordance with 4.7.4, a conduit body having provision for connection of conduit or tubing 3/4 (21) trade size or larger shall comply with the requirements of either 5.5.3.1 or 5.5.3.4.

Copyright National Electrical Manufacturers Association
Provided by IHS under license with NEMA
No reproduction or networking permitted without license from IHS
Not for Resale

5.5.3.1 A conduit body that does not change the direction of wiring passing through it shall have a length at least eight times the trade diameter of the largest raceway that can be connected to it. This length shall be measured in accordance with Figure 5-3.

5.5.3.2 A conduit body that permits a change in the direction of wiring passing through it shall have a distance between each raceway entry and the opposite wall of the body at least six times the trade diameter of the largest raceway that can be connected to it plus the sum of the trade diameters of all other entries in the same wall, except that where a raceway entry is in a wall opposite a removable cover, the distance from the wall to the cover shall be permitted to be no less than that specified in Table 5-1. These distances shall be measured in accordance with Figure 5-4.

5.5.3.3 In all cases, the distance between the raceway entries, designed to enclose a common conductor shall be not less than six times the trade diameter of the largest raceway.

5.5.3.4 A conduit body having dimensions less than those required in 5.5.3.1 shall be permanently marked with the maximum number and maximum size of the conductors for which it has been judged suitable as a result of investigation.

5.5.4 Conduit Entries

Conduit bodies shall be provided with integral external hubs.

5.5.5 Covers

Thickness of covers shall conform to the minimum wall thickness in Table 2-1.

Copyright National Electrical Manufacturers Association
Provided by IHS under license with NEMA
No reproduction or networking permitted without license from IHS

Not for Resale

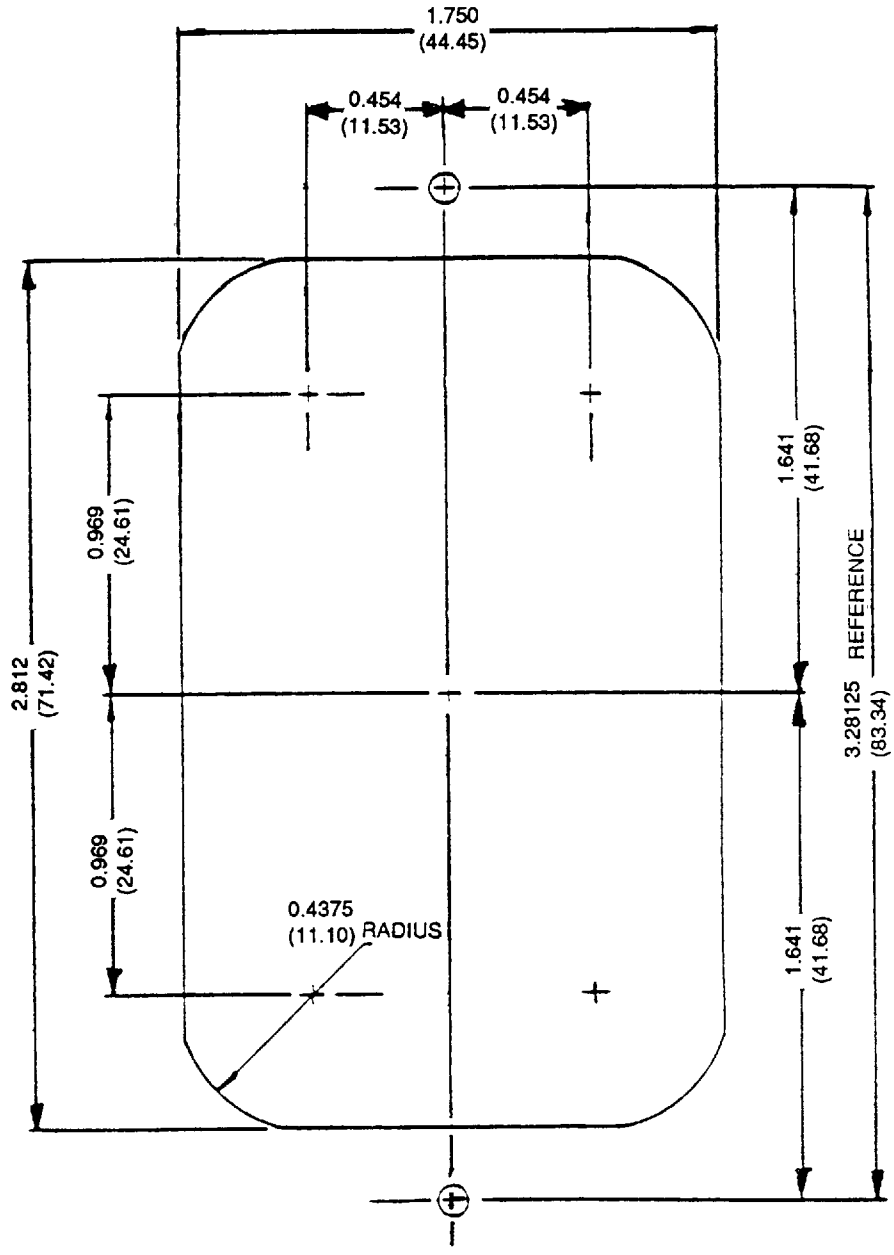

All dimensions in inches (mm)

Note: This standard corresponds to those included in NEMA Standards Publications WD 6 and OS 1. Available space at depths within the box may be further reduced by accessory hardware, hubs, and bosses.

Figure 5-1
MINIMUM BOX/COVER FACE OPENING

Copyright National Electrical Manufacturers Association
Provided by IHS under license with NEMA
No reproduction or networking permitted without license from IHS
Not for Resale

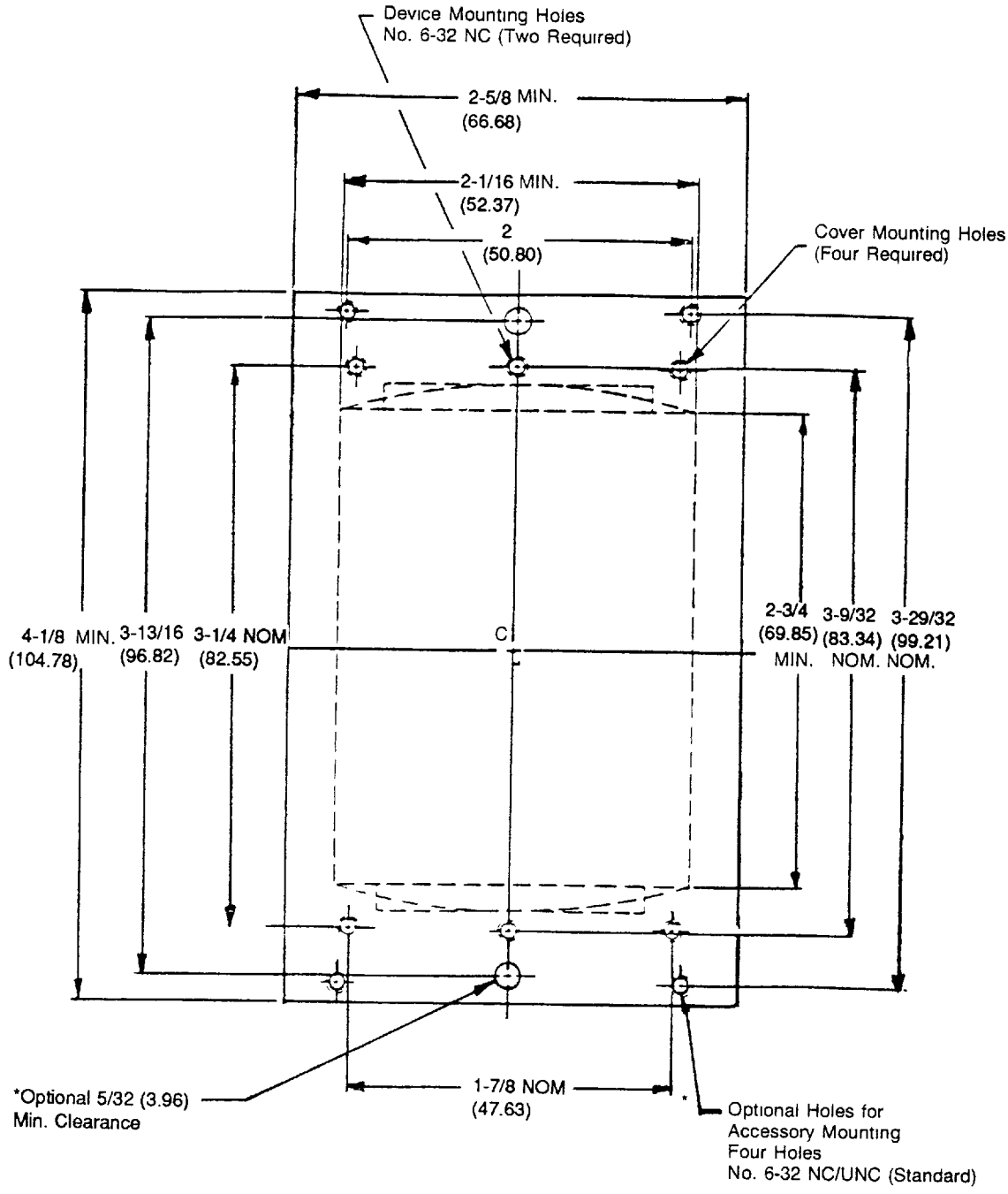

All dimensions in inches (mm)

Note: Tolerance on nominal dimensions ±1/32" (40.79)

Figure 5-2
CONFIGURATION OF SINGLE-GANG FS AND FD BOX FACE**

**Also applicable to single-gang box faces on multigang boxes.

Copyright National Electrical Manufacturers Association
Provided by IHS under license with NEMA
No reproduction or networking permitted without license from IHS
Not for Resale

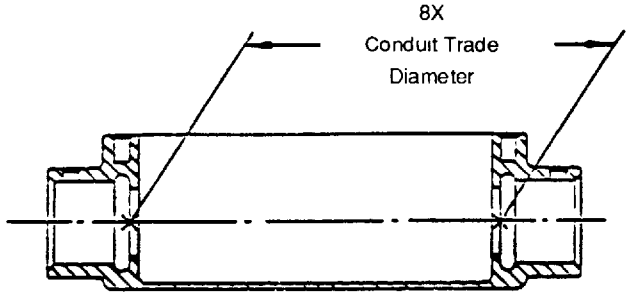

Figure 5-3
STRAIGHT PULL TYPE-C

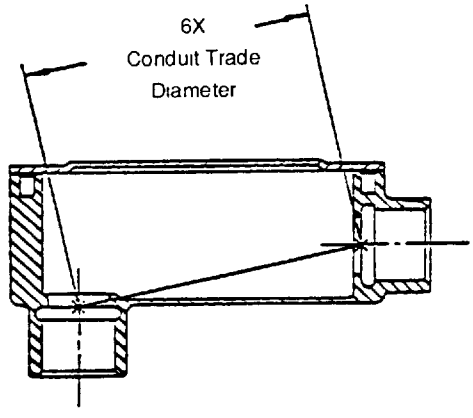

Figure 5-4
ANGLE PULL ENTRY OPPOSITE REMOVABLE COVER TYPE-LB

Copyright National Electrical Manufacturers Association
Provided by IHS under license with NEMA
No reproduction or networking permitted without license from IHS
Not for Resale

Section 6
DESIGN TESTS

6.1 GENERAL

6.1.1 Box

The term box used in this section refers to junction boxes, pull boxes, and enclosures.

6.1.2 Design Tests

The following design tests shall be made when required by sections 2, 3, 4, or 5 and shall be used to demonstrate conformance with these standards.

These design tests do not necessarily duplicate environmental conditions and are not contemplated in normal production. To assure realistic testing, the fitting, box, or enclosure shall be mounted as it would be in service.

Unless otherwise specified, one sample of each fitting, box, or enclosure shall be subjected to the required tests. Where more than one sample is required, all samples shall pass the test.

6.1.3 Ranges of Sizes

A fitting intended to accommodate a range of sizes of conduit or cable assemblies, or both, shall meet the performance requirements for that fitting when tested on the largest and smallest sizes of the conduit or cable assemblies, or both, within that range.

6.2 ROD ENTRY TEST

The Rod Entry Test shall be made by attempting to insert the end portion of a 17/64 inch (6.75 mm) diameter straight rigid rod into the cavity of the fitting (after the fitting has clamped the conduit or cable assembly in place). The fitting conforms to the standard if the rod cannot enter the fitting.

6.3 RAIN TEST

6.3.1 Method

A complete connector with box or coupling shall be assembled to its raceway in the intended manner.

A continuous water spray, using as many nozzles as are required, shall be applied against the entire top and all exposed sides of the fitting or box for 1 hour at a rate of at least 18 inches (457 mm) per hour at an operating pressure of 5 pounds per square inch (0.352 kilograms per square centimeter). The rate shall be determined by measuring the rise of water in a straight-sided pan that has been placed horizontally and completely within the area covered by the falling water. A rain test which is performed in accordane with UL 50, "Rain Test" shall be considered to be equivalent to this test.

6.3.2 Evaluation

The enclosure shall be considered to have met the requirements of this test if no water has entered the enclosure.

6.4 (RESERVED)

6.5 (RESERVED)

6.6 OIL TEST (OIL-TIGHT)

6.6.1 Method

A complete connector with box or coupling shall be assembled to its cable or raceway in the intended manner.

The box or fitting shall be subjected to a stream of test liquid through a nozzle which has a 1/8-inch (3.2 mm) diameter opening and which delivers at least 2 gallons (7.57 liters) per minute. The test liquid shall consist of water to which has been added a wetting agent to a concentration of approximately 0.1 percent by weight (or by volume if the wetting agent is liquid).

The stream shall be directed upon the box or fitting from all angles from a distance of 12 to 18 inches (304.8 to 457 mm) for 30 minutes.

6.6.2 Evaluation

The box or fitting shall be considered oil-tight and dust-tight if no test liquid has entered.

6.7 CONCRETE TEST

6.7.1 Method

The box or fittings shall be assembled in the intended manner to short lengths of a conduit or tubing of the proper size and, when possible, the raceway shall be pushed against the end of the centering stop of the fitting before the fitting is tightened. The tightening torque applied to the fitting shall be that given in Table 6-1 for threadless fittings, except that a fitting that can be tightened by means of a screwdriver or a bolt-head screw shall be tightened as described in 3.3. The end(s) of the raceway shall be sealed. The assembly shall be placed in the bottom of a box having a depth of 2 feet (609.6 mm) and that box shall be filled with concrete mixed in accordance with 6.7.2. Twenty-four hours after the concrete has been poured, it shall be broken loose from the box or fitting, and the interior shall be examined.

Copyright National Electrical Manufacturers Association
Provided by IHS under license with NEMA
No reproduction or networking permitted without license from IHS

Not for Resale

Table 6-1
TIGHTENING TORQUE, BENDING LOAD, AND PULLOUT FORCE FOR THREADED AND THREADLESS FITTINGS

Fitting Trade Size Designator	Metric Size Designator	Test Tighting Torque		Bending Load, Pounds (kg)		Pullout Force: EMT, Rigid Conduit, GRC and IMC, Pounds (N)
		Pound-Inches	(N.m.)	EMT	Rigid Conduit (GRC) and IMC	
3/8	12	200*	22.6	15 (6.80)	30 (13.61)	200 (890)
1/2	16	300	33.9	20 (9.07)	60 (27.22)	300 (1334)
3/4	21	500	56.5	35 (15.88)	80 (36.29)	450 (2002)
1	27	700	79.1	50 (22.68)	120 (54.43)	600 (2668)
1-1/4	35	1000	113	75 (34.02)	160 (72.57)	700 (3114)
1-1/2	41	1200	136	85 (38.56)	160 (72.57)	800 (3559)
2	53	1600	181	110 (49.89)	160 (72.57)	1000 (4450)
2-1/2	63	1600	181	110 (49.89)	160 (72.57)	1000 (4450)
3	78	1600	181	110 (49.89)	160 (72.57)	1000 (4450)
3-1/2	91	1600	181	110 (49.89)	160 (72.57)	1000 (4450)
4	103	1600	181	110 (49.89)	160 (72.57)	1000 (4450)
5	129	1600	181	110 (49.89)	160 (72.57)	1000 (4450)
6	155	1600	181	110 (49.89)	160 (72.57)	1000 (4450)

*A 3/4 (21) trade-size fitting for use with liquid-tight flexible metal conduit is to be tightened with a torque of 235 pound-inches (26.6 N.m.).

6.7.2 Concrete Sand Mixture

Ordinary grey cement shall be used in the preparation of concrete. The sand shall be of the type known to the construction industry as mason sand. The cement-sand ratio shall be 1:2 by volume. There shall be a 1/16-inch-deep (1.6 mm) film of water on the surface of the mixture after it has stood for 1 minute in the mixing vat.

6.7.3 Evaluation

The fitting or box shall be considered to be concrete-tight if no concrete has entered through the fitting or box.

6.8 FLAME TEST

6.8.1 Method

6.8.1.1 The flame test shall be conducted in a three-sided enclosure that is 12 inches (304.8 mm) wide, 14 inches (355.6 mm) deep, and 24 inches (609.6 mm) high. The top and front of the enclosure shall be open. The room or hood in which the enclosure is located shall be open. The room or hood in which the enclosure is located for the test shall be adequately ventilated; drafts shall be prevented from affecting the test flame. A 4-inch (101.6 mm) square specimen of the molded composition, in sheet form, having a thickness equal to the minimum thickness for the body of the enclosure shall be secured with its vertical axis in the center of the test enclosure and with both axes parallel to the back of the test enclosure. See Figure 6-1.

6.8.1.2 A Tirrill gas burner to which a pilot light is attached shall supply the test flame. The barrel of the burner shall extend 4 inches (101.6 mm) above the air inlets and its outside diameter shall be 3/8-inch (9.6 mm). While the barrel is vertical, the overall height of the flame shall be adjusted to 5 inches (127 mm). The blue inner cone shall be 1-1/2 inches (38.1 mm) high. Without disturbing the adjustments for the height of the flame, the valves supplying gas to the burner and pilot flames shall be closed.

6.8.1.3 A wedge to which the base of the burner can be secured shall be provided for tilting the barrel 20 degrees from the vertical, while the longitudinal axis of the barrel remains in a vertical plane. The burner shall be secured to the wedge and the assembly placed in an adjustable jig that is attached to the floor of the test enclosure. The jig shall be adjusted laterally (see Figure 6-1) to place the longitudinal axis of the barrel in the same vertical plane as the vertical axis of the specimen. The plane shall be parallel to the sides of the test enclosure.

6.8.1.4 The jig shall also be adjusted toward the rear or front of the enclosure (see Figure 6-1) so as to position point "A" (the intersection of the longitudinal axis of the barrel with the plane of the tip of the barrel) 1-1/2 inches (38.1 mm) from point "B" at which the extended longitudinal axis of the barrel meets the front surface of the specimen. Point "B" is the point at which the tip of the inner blue cone will touch the specimen. The specimen

Copyright National Electrical Manufacturers Association
Provided by IHS under license with NEMA
No reproduction or networking permitted without license from IHS
Not for Resale

shall be adjusted vertically to place point "B" at the center of the specimen.

6.8.1.5 The valve supplying gas to the pilot shall be oper .. and the pilot flame lit. The valve supplying gas to the burner shall be opened to automatically apply the flame to the specimen. This valve shall be held open for 15 seconds and then closed for 15 seconds. This procedure shall be repeated four times for a total of five applications of flame to the specimen.

6.8.2 Evaluation

The specimen shall not support combustion for more than 1 minute after the fifth 15-second application of the flame.

6.9 ELECTRICAL CONTINUITY TEST

6.9.1 Maximum Voltage Drop

Unless otherwise specified, fittings shall have a maximum voltage drop of 10 millivolts* when a 30 ampere direct current is passed through the fitting.

*50 millivolts for liquid-tight flexible metallic conduit fittings, flexible metal conduit fittings, armored cable connectors, and metal-clad (Type MC) cable connectors (armored and interlocked armored).

6.9.2 Test Method

The voltage drop shall be measured across the fitting between two points, one on the outside of the enclosure 1/16 inch (1.6 mm) from the edge of the fitting, and the other on the conduit 1/16 inch (1.6 mm) from the fitting. For a coupling, the voltage drop shall be measured between two points; one on each section of the conduit or tubing and 1/16 inch (1.6 mm) from the fitting.

6.10 ELASTOMERIC MATERIALS DETERIORATION TEST

6.10.1 Internal Parts

6.10.1.1 Internal rubber and other elastomeric components shall show no apparent deterioration, and shall not show a change in hardness of more than five numbers after exposure to oxygen at a pressure of 300 ±10 pounds per square inch (2.07 ±0.07 MPa) and a temperature of 70°C ±1°C for 96 hours.

6.10.1.2 The hardness of the unaged material shall be determined as the average of five readings with a gauge, such as the Rex Hardness Gauge or the Shore Durometer. The component shall then be exposed to oxygen for 96 hours in accordance with the method described in ANSI/UL 44-1991. The component shall be allowed to rest at room temperature for not less than 4 hours after being removed from the oxygen bomb. The hardness shall then be determined again as the average of five readings. The difference between the original hardness reading and the reading taken after the exposure to oxygen is the change in hardness.

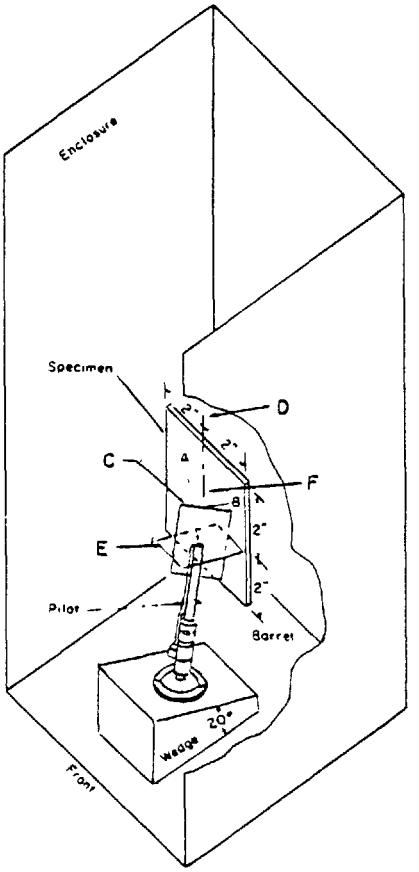

a SI units for the values specified are: 4 inches (102 mm); 2 inches (50.8 mm); 1-1/2 inches (38.1 mm)

C Vertical plane parallel to sides of enclosure and containing vertical axis of specimen and longitudinal axis of barrel

D Vertical axis of specimen in center of enclosure and parallel to back of enclosure.

E Plane of the tip of the barrel

F Longitudinal axis of barrel

Figure 6-1
DIMENSIONS OF TEST APPARATUS AND SPECIMEN FOR FLAME TEST

Copyright National Electrical Manufacturers Association
Provided by IHS under license with NEMA
No reproduction or networking permitted without license from IHS
Not for Resale

6.10.2 Liquid-Tight Fittings

A rubber or rubber-like material used in a liquidtight conduit fitting shall show no apparent deterioration after exposure to oxygen at a pressure of 300 ±10 pounds per square inch (2.07 ±0.07 MPa) and a temperature of 70°C ±1°C for 96 hours.

6.11 TESTS FOR ASSIGNING TEMPERATURE RATINGS TO INSULATING MATERIAL USED FOR BUSHINGS

6.11.1 Samples

Separate samples shall be subjected to each of the tests in 6.11.2 and 6.11.3. Six samples shall be tested except that, if a line of at least four trade sizes of a particular design is being investigated, three samples of each trade size shall be tested.

6.11.2 Distortion Test

A bushing or fitting shall be placed in a circulating air oven at the temperature specified in Table 6-2 for a period of 168 hours.

Table 6-2
CONDITIONING TEMPERATURES

Temperature Rating of Device, Degrees C (°F)	Conditioning Temperature Degrees C* (°F)
90 (194.0)	112 (233.6)
105 (221.0)	128 (262.4)
150 (302.0)	173 (343.4)

*This temperature equals the rated temperature of the fitting or part plus 15°C (59°F) plus 2 percent of the rated temperature on the absolute scale.

6.11.2.1 The bushing or fitting does not meet the requirements of this test if the throat becomes so distorted as to reduce the inside diameter of the throat to a dimension less than 90 percent of the value specified as a minimum in Table 2-6.

6.11.3 Suspended Weight and Drop Test

6.11.3.1 A bushing or fitting shall be installed in the intended manner (mounting on tubing or conduit).

6.11.3.2 The tubing or conduit shall be mounted horizontally in a circulating air oven at the conditioning temperatures specified in Table 6-2. A loop of 12 AWG bare solid copper conductor shall be brought through the open end of each section of tubing or conduit. A 10-pound (4.54 kg) weight shall be suspended from the conductor loop. The test shall be continued for a period of 72 hours.

6.11.3.3 The fitting or bushing does not meet the requirements of this test if the insulating material cracks or melts so as to expose metal or form an incomplete insulating throat.

6.11.3.4 The conditioned samples shall be allowed to return to room temperature. Each sample made of other than insulating material, but having a throat made of insulating material, shall be dropped on a hardwood surface from a height of 1 foot (304.8 mm).

6.11.3.5 The sample does not meet the requirements of this test if the insulating throat is dislodged by the impact.

Copyright National Electrical Manufacturers Association
Provided by IHS under license with NEMA
No reproduction or networking permitted without license from IHS
Not for Resale

Section 7
MANUFACTURING STANDARDS

7.1 THREADS FOR FITTINGS, CAST METAL BOXES, AND CONDUIT BODIES

Cut threads on conduit fittings, cast metal boxes and conduit bodies for ordinary location applications shall comply with 7.1.1 or 7.1.2, as applicable.

Exception: Products that are manufactured and furnished as a complete assembly or that do not require thread interchangeability with conduit or conduit fittings shall not be required to comply with these standards.

7.1.1 Conduit Entries with Tapered Threads

7.1.1.1 CONSTRUCTION

The construction of a threaded conduit entry shall conform to one of the types specified in 4.4.1.

7.1.1.2 THREAD FORM

The thread form of conduit entries shall be a tapered pipe thread conforming to ANSI/ASME B1.20.1.

7.1.1.3 PITCH DIAMETER

The pitch diameter of the thread in a conduit entry shall comply with the gaging requirements in 7.1.1.4.

7.1.1.4 GAGING

a. Gaging shall be performed on entries with clean, undamaged threads after any protective coatings or finishes have been applied.

b. A pipe plug or conduit nipple having a minimum thread tolerance (plus one turn on the NPT ring gage) shall be wrench-tightened into the entry and removed before gaging. Any remaining foreign particles (plating, coating, etc.) shall be wiped or blown away.

c. A standard NPT plug gage complying with ANSI/ASME B1.20.1 shall be inserted into the entry until it is firmly handtight.

d. The number of turns to completely disengage the NPT plug gage shall be within the limits specified in Table 7-1.

e. In all cases, the minimum hub depth (or thread depth in the case of an entry without a thread relief) shall be equivalent to the actual thread depth needed to achieve the required number of disengagement turns falling within the specified range plus the equivalent length of two additional threads.

Table 7-1
NUMBER OF TURNS TO COMPLETELY DISENGAGE THE HAND-TIGHT NPT PLUG GAGE FROM THE CONDUIT ENTRY

Conduit Entry Trade Size	Metric Size Designator	Minimum	Maximum
1/2	16	3.23	7.98
3/4	21	3.50	8.25
1	27	3.35	8.10
1-1/4	35	3.58	8.33
1-1/2	41	3.58	8.33
2	53	3.76	8.51
2-1/2	63	4.21	8.96
3	78	4.88	9.63
3-1/2	91	5.32	10.07
4	103	5.50	10.25
5	129	6.25	11.00
6	155	6.41	11.16

Note: The range of gaging specifications given in this table is intended to give maximum design latitude within acceptable limits. To select a proper range for individual products, consideration should be given to the intended application for that particular product.

7.1.2 Fittings with External Straight Threads

Fittings for use with threaded rigid metal conduit couplings, threaded intermediate metal conduit couplings, or other electrical fittings having internal tapered or straight threads* shall be in compliance with ANSI/ASME B1.20.1 requirements and gaging practices as described in Section 9, Paragraphs 9.1 through 9.2 and Table 6.

*Cut threads, for ordinary location applications only.

7.1.3 Fittings with External Tapered Threads

Fittings for use with threaded rigid metal conduit couplings, intermediate metal conduit couplings, or other electrical fittings having internal tapered or straight threads shall comply with the gaging requirements described in Table 7-2.

7.1.4 Fittings with Internal Straight Threads

Fittings having short threads on bushings or hubs for use with rigid metal conduit, intermediate metal conduit, or other electrical fittings having external tapered or straight threads shall comply with the gaging requirements described in Table 7-3.

Copyright National Electrical Manufacturers Association
Provided by IHS under license with NEMA
No reproduction or networking permitted without license from IHS
Not for Resale

7.2 KNOCKOUT DIMENSIONS

Dimensions designed to assure compatibility of knockouts with locknuts, bushings and metal conduit (IMC or GRC) are shown in Table 7-4.

7.3 DIMENSIONS OF FLAT SURFACES SURROUNDING KNOCKOUTS

Figure 7-1 illustrates dimensions of flat surfaces surrounding knockouts.

Table 7-2
GAGING REQUIREMENTS FOR EXTERNAL TAPERED THREADS FOR CONDUIT FITTINGS FOR USE WITH THREADED RIGID METAL CONDUIT COUPLINGS, THREADED INTERMEDIATE METALLIC CONDUIT COUPLINGS, OR OTHER ELECTRICAL FITTINGS HAVING TAPERED OR STRAIGHT INTERNAL THREADS (CUT THREADS—FOR ORDINARY LOCATION APPLICATIONS ONLY)

			Hand Tight Engagement Number of Turns Gaged with Standard N.P.T. Working Ring Gage*	
Conduit Entry Trade Size Designator	Metric Size Designator	Threads per inch	Minimum	Maximum
1/2	16	14	3	5-1/2
3/4	21	14	3	5-1/2
1	27	11-1/2	3	5-3/4
1-1/4	35	11-1/2	4	6
1-1/4	41	11-1/2	4	6
2	53	11-1/2	4	6
2-1/2	63	8	4	6-1/2
3	78	8	5	7-1/4
3-1/2	91	8	5	7-3/4
4	103	8	5	7-3/4
5	129	8	6	8-1/2
6	155	8	6	8-3/4

*Gaging performed after plating

Table 7-3
GAGING REQUIREMENTS FOR INTERNAL STRAIGHT PIPE THREADS FOR CONDUIT FITTINGS HAVING SHORT THREADS ON BUSHINGS OR HUBS FOR USE WITH THREADED RIGID METAL CONDUIT, THREADED IMC, OR OTHER ELECTRICAL FITTINGS HAVING TAPERED OR STRAIGHT EXTERNAL THREADS (CUT THREADS—FOR ORDINARY APPLICATIONS ONLY)

			Minimum Number of Turns Engagement with an NPSN Plug Gage*	
			Minimum Turns	
Conduit Entry Trade Size Designator	Metric Size Designator	Threads per Inch	Bushings/Hubs with NSC Short Threaded Entry	Fittings with NSC Full Length Threaded Entry
3/8	12	18	3-1/2 turns	7-1/4 turns
1/2	16	14	3-1/2	7-1/2
3/4	21	14	4	7-1/2
1	27	11-1/2	4	7-1/4
1-1/4	35	11-1/2	4	8-1/4
1-1/2	41	11-1/2	4	8-1/4
2	53	11-1/2	4	8
2-1/2	63	8	4	9
3	78	8	4	9-1/2
3-1/2	91	8	4	10
4	103	8	4	10-1/2
5	129	8	4	11-1/4
6	155	8	4	12

*Gaging performed after plating

Copyright National Electrical Manufacturers Association
Provided by IHS under license with NEMA
No reproduction or networking permitted without license from IHS
Not for Resale

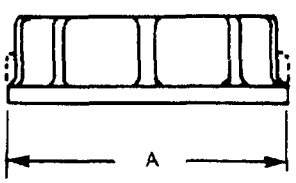

Metallic Bushing
Figure 7-5A

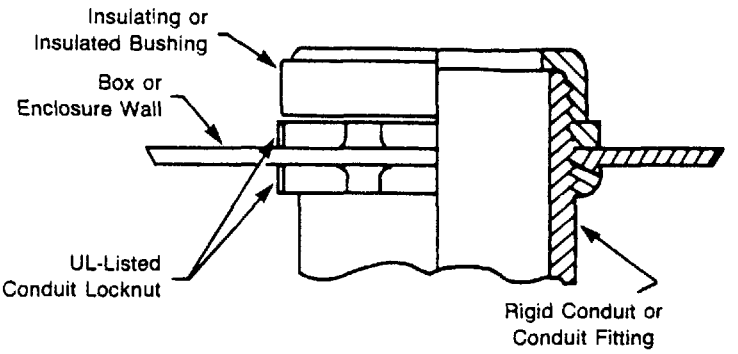

Nonmetallic Bushing with Locknut
Inside of Enclosure
Figure 7-5B

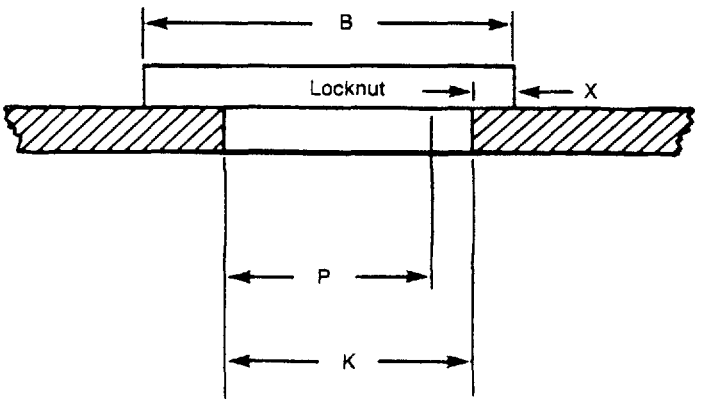

Minimum Overlap Over
Nominal Knockout
Figure 7-5C

Figure 7-1
DIMENSIONS OF FLAT SURFACES SURROUNDING KNOCKOUTS
(ILLUSTRATIONS ARE NOT DESIGN DETAILS)

Copyright National Electrical Manufacturers Association
Provided by IHS under license with NEMA
No reproduction or networking permitted without license from IHS

Not for Resale

Copyright National Electrical Manufacturers Association
Provided by IHS under license with NEMA
No reproduction or networking permitted without license from IHS
Not for Resale

Table 7-4
COMPATIBILITY OF KNOCKOUT DIMENSIONS WITH LOCKNUTS, BUSHINGS, AND METAL CONDUIT (IMC OR RIGID) TO ASSURE COORDINATION*, **

All Dimensions in inches (mm)

Conduit Trade Size Designator	Metric Size Designator	Major Diameter of External Thread		Knockout Diameter†▲▲			Metallic Bushing With or Without Insulated Throat (See Figure 7-1a)		Nonmetallic Bushing with Locknut Inside of Enclosure (See Figure 7-1B)	
		Min.▲			Nom.		Diameter at Flange Min.	Overlap over Nominal Knockout Min.ss	Covering Diameter of Locknut, Knockout Min.	Overlap over Nominal Min.▲▲
		Dim. P*	Max††	Min.	Dim. K*	Max.	Dim. A*	Dim. X	Dim. B*	Dim. X
1/2	16	0.815 (20.70)	0.855 (21.72)	0.859 (21.82)	0.875 (22.13)	0.906 (23.01)	1.00 (25.40)	0.033 (0.84)	0.937 (23.80)	0.001 (0.03)
3/4	21	1.029 (26.14)	1.066 (27.08)	1.094 (27.79)	1.109 (28.17)	1.141 (28.98)	1.23 (31.24)	0.021 (0.53)	1.189 (30.20)	0.000 (0.00)
1	27	1.290 (32.77)	1.331 (33.81)	1.359 (34.52)	1.375 (34.93)	1.406 (35.71)	1.54 (39.12)	0.040 (1.02)	1.485 (37.72)	0.013 (0.33)
1-1/4	35	1.638 (41.60)	1.676 (42.57)	1.719 (43.66)	1.734 (44.04)	1.766 (44.86)	1.92 (48.72)	0.045 (1.14)	1.859 (47.72)	0.015 (0.38)
1-1/2	41	1.878 (47.70)	1.916 (48.67)	1.958 (49.73)	1.984 (50.39)	2.016 (51.21)	2.18 (55.37)	0.045 (1.14)	2.109 (53.57)	0.010 (0.25)
2	53	2.352 (59.74)	2.399 (60.94)	2.433 (61.80)	2.469 (62.71)	2.500 (63.50)	2.68 (68.07)	0.047 (1.19)	2.635 (66.93)	0.025 (0.64)
2-1/2	63	2.843 (72.21)	2.904 (73.76)	2.938 (74.63)	2.969 (75.41)	3.000 (76.20)	3.20 (81.28)	0.053 (1.35)	3.156 (80.16)	0.030 (0.76)
3	78	3.469 (88.11)	3.535 (89.79)	3.583 (91.01)	3.594 (91.29)	3.625 (92.08)	3.83 (97.28)	0.056 (1.42)	3.812 (96.82)	0.046 (1.17)
3-1/2	91	3.970 (100.84)	4.040 (102.62)	4.063 (103.20)	4.125 (104.78)	4.156 (105.56)	4.40 (111.76)	0.060 (1.52)	4.343 (110.31)	0.032 (0.81)
4	103	4.466 (113.44)	4.545 (115.44)	4.563 (115.90)	4.641 (117.88)	4.672 (118.67)	4.94 (125.48)	0.062 (1.57)	4.890 (124.21)	0.037 (0.94)
5	129	5.530 (140.46)	5.619 (142.72)	5.625 (142.88)	5.719 (145.26)	5.750 (146.05)	6.05 (153.67)	0.071 (1.80)	6.062 (153.97)	0.077 (1.96)
6	155	6.587 (167.31)	6.691 (169.95)	6.700 (170.18)	6.813 (173.05)	6.844 (173.84)	7.20 (182.88)	0.081 (2.06)	7.110 (180.59)	0.035 (0.89)

*Dimensional changes in this column may cause incompatible assembly.

**These dimensions are for knockout diameters for single or concentric types only and exclude any projection of breakout ears or tabs.

†This dimension is the normal major diameter of the thread at E_1, or the nominal diameter of the intermediate metal conduit (Ref.: UL 6, UL 514B, UL 1242), whichever is less.

††The maximum diameter of rigid conduit (Ref.: ANSI C80.1)

▲Dimensions for trade sizes of 1/2 through 1-1/4 (16 through 35) are from UL 514B. Minimum dimensions for larger sizes are necessary to clear the maximum diameter of the external thread (i.e. Col. 4 is greater than Col. 3).

▲▲The stated values are calculated: the minimum overlap (Dim. X) equals the minimum diameter (at flange or outer diameter of locknut)(Dim. B), minus the minimum major diameter (Dim. P), divided by 2, minus the conduit clearance (Dim. C), where C equals the nominal knockout diameter (Dim. P). relationship is given by:

$$X = \frac{B-P}{2} - (K-P)$$

NEMA STANDARDIZIATION BACKGROUND

The purpose of NEMA standards, their classification, and status are set forth in certain clauses of the NEMA *Standardization Policies and Procedures* manual and are referenced below:

Purpose of Standards

National Electrical Manufacturers Association Standards are adopted in the public interest and are designed to eliminate misunderstandings between the manufacturer and the purchaser and to assist the purchaser in selecting and obtaining the proper product for their particular needs. Existence of a National Electrical Manufacturers Association Standard does not in any respect preclude any member or nonmember from manufacturing or selling products not conforming to the standard.

Definition of a Standard

A standard of the National Electrical Manufacturers Association defines a product, process, or procedure with reference to one or more of the following: nomenclature, composition, dimensions, tolerances, safety, operating characteristics, performance, rating, testing, and the service for which they are designed.

(Standardization Policies and Procedures, p. 1)

Dimensions

Where dimensions are given for interchangeability purposes, alternate dimensions satisfying the other provisions of the Standards Publication may be capable of otherwise equivalent performance.

(Standardization Policies and Procedures, p. 6)

Categories of Standards

National Electrical Manufacturers Association Standards are of three classes, which have received the affirmative vote of at least two-thirds of the Subdivision votes cast in the affirmative or negative:

1. NEMA Standard, which relates to a product, process, or procedure commercially standardized and subject to repetitive manufacture.
2. Suggested Standard for Future Design, which may not have been regularly applied to a commercial product, but which suggests a sound engineering approach to future development.
3. Adoptive Standard, which is adopted in whole or in part from the standards of another organization, either domestic, regional, or international.

(Standardization Policies and Procedures, pp. 5)

Authorized Engineering Information

Authorized Engineering Information consists of explanatory data and other engineering information of an informative character not falling within the classification of NEMA Standard or Suggested Standard for Future Design, which standard has received the affirmative vote of at least two-thirds of the Subdivision votes cast in the affirmative or negative.

(Standardization Policies and Procedures, pp. 5)

Identification of Status

Standards in NEMA Standards Publications are identified as "NEMA Standard," "Suggested Standard for Future Design," or "Adoptive Standard." These indicate the status of the standard. A statement incorporating the auxiliary verb "shall" indicates that compliance with a requirement is mandatory for compliance with the standard. These classes of standards are identified in the foreword or throughout the text.

The material identified as "Authorized Engineering Information" is designated similarly. Statements incorporating other auxiliary verbs such as "should," "may," etc. refer to the authorized engineering information and not to procedures required for compliance with the standard.

Copyright National Electrical Manufacturers Association
Provided by IHS under license with NEMA
No reproduction or networking permitted without license from IHS
Not for Resale

CONDUIT FITTINGS SECTION
OF THE
NATIONAL ELECTRICAL MANUFACTURERS ASSOCIATION

Adalet-PLM
Division of Scott & Fetzer Company
Cleveland, OH 44135

American Electric
Memphis, TN 38119

Appleton Electric Company
Chicago, IL 60657

Arlington Industries, Inc.
Scranton, PA 18505

Berger Industries, Inc.
Maspeth, NY 11378

Bridgeport Fittings, Inc.
Bridgeport, CT 06601

Challenger Electrical Equipment Corporation
Portland, TN 37148

Crouse-Hinds
Cooper Industires, Inc.
Syracuse, NY 13221

Elliott Electric Manufacturing Corporation
Strongsville, OH 44136

The Halex Company
Division of Scott & Fetzer Co.
Cleveland, OH 44146

Kellems Division, Hubbell Incorporated
Stonington, CT 06378

Killark Electric Manufacturing Company
Subsidiary of Hubbell Incorporated
St. Louis, MO 63115

Minerallac Electric Company
Addison, IL 60101

Myers Electric Products, Inc.
Montebello, CA 90640

Neer Manufacturing Company, Inc.
Lexington, OH 44904

O-Z/Gedney Company
A Unit of General Signal Corporation
Terryville, CT 06786

Pass & Seymour/Legrand
Syracuse, CT 13221

Producto Electric Corporation
Orangeburg, NY 10962

Red Dot Division
L E Mason Company
Boston, MA 02136

Raco, Inc.
Subsidiary of Hubbell Incorporated
South Bend, IN 46634

Regal Manufacturing
Division of Creftcon Industries
Industry, CA 91749

Steel Electric Products Company, Inc.
Brooklyn, NY 11219

Thepitt Manufacturing Company, Inc.
Meadow Lands, PA 15347

Thomas & Betts Corporation
Memphis, TN 38119

Copyright National Electrical Manufacturers Association
Provided by IHS under license with NEMA
No reproduction or networking permitted without license from IHS
Not for Resale