A-07-01

FB 1-83 6470247 0001041 9

STANDARDS PUBLICATION/NO. FB 1-1983
Including: Revision No. 1 — September 1984

nema

Fittings, Cast Metal Boxes, and Conduit Bodies for Conduit and Cable Assemblies

NEMA

NATIONAL ELECTRICAL MANUFACTURERS ASSOCIATION • 2101 L STREET, N.W., WASHINGTON, D.C. 20037

Copyright National Electrical Manufacturers Association
Provided by IHS under license with NEMA
No reproduction or networking permitted without license from IHS
Not for Resale

© 1985 by National Electrical Manufacturers Association

Copyright National Electrical Manufacturers Association
Provided by IHS under license with NEMA
No reproduction or networking permitted without license from IHS

Not for Resale

TABLE OF CONTENTS▲

		Page
	FOREWORD	iv
	HISTORY	v
	SCOPE	vi
	FAMILY TREE	vii
Section 1	REFERENCED STANDARDS AND DEFINITIONS	1
	Referenced Standards	1
	Definitions	2
Section 2	GENERAL STANDARDS FOR FITTINGS	6
	General Requirements for Fittings	6
	Metallic Materials	6
	Nonmetallic Materials	8
	Electrical Continuity	8
	Torque Requirements	8
	Assembly	8
	Thread Dimensions	8
	Box Connectors	8
	Offset Fittings	9
	Cross-Sectional Area	10
	Conduit Locknuts for Threaded Rigid Metal Conduit and Intermediate Metal Conduit	10
	Bushings	11
	Ground Clamp	11
	Marking	11
Section 3	REQUIREMENTS FOR SPECIFIC TYPES OF FITTINGS, CAST BOXES, AND CONDUIT BODIES	12
	Types	12
	Fittings for Threaded Rigid Metal Conduit and Intermediate Metal Conduit	12
	Fittings for Unthreaded Rigid Metal Conduit, Intermediate Metal Conduit, and Electrical Metallic Tubing	12
	Fittings for Armored Cable and Flexible Metal Conduit	14
	Connectors for Nonmetallic Sheathed Cable	15
	Fittings for Metal-Clad Cable	16
	Fittings for Mineral-Insulated Metal-Sheathed Cable	17
	Fittings for Service Entrance Cable	19
	Sill Plate	19
	Fittings for Liquid-Tight Flexible Metal Conduit	19
	Service Entrance Heads (Caps, Hoods) and Elbows (Ells)	20
	Cast Metal Boxes and Conduit Bodies	21
	Specific Requirements for Cast Metal Boxes and Conduit Bodies	22
Section 4	MANUFACTURING STANDARDS	25
	Threads for Fittings for Conduit and Cable Assemblies	25
	Knockout Dimensions	36
	Dimensions of Flat Surfaces Surrounding Knockouts	37
Section 5	TYPE DESIGNATIONS FOR BOXES, JUNCTION BOXES, AND ENCLOSURES OVER 100 CUBIC INCHES	38
Section 6	DESIGN TESTS	38
	General	38
	Rod-Entry Test	38

▲ Editorially revised.

(Continued)

Copyright National Electrical Manufacturers Association
Provided by IHS under license with NEMA
No reproduction or networking permitted without license from IHS
Not for Resale

TABLE OF CONTENTS (contd)

Rain Test 38
Rust-Resistance Test 38
Corrosion-Resistance Test (Corrosion-Resistant) 39
Oil Test (Oiltight) 39
Concrete Test 39
Flame Test 40
Electrical Continuity Test 41
Elastomeric Materials Deterioration Test 41
Tests for Assigning Temperature Ratings to Insulating Material Used for Bushings 42
Environmental Conditioning 42

Section 7 METRIC CONVERSION 43

Illustrations

Figure 3-1 BENDING TEST FOR THREADLESS FITTINGS 14

Figure 3-2 CONFIGURATION FOR SINGLE-GANG FS AND FD BOX FACE 23

Figure 4-1 BASIC DIMENSIONS OF INTERNAL TAPERED THREADS FOR CONDUIT FITTINGS FOR USE WITH THREADED RIGID METAL CONDUIT, THREADED INTERMEDIATE METAL CONDUIT, OR OTHER ELECTRICAL FITTING HAVING TAPERED OR STRAIGHT EXTERNAL THREADS (CUT THREADS—FOR ORDINARY LOCATION APPLICATIONS ONLY) 26

Figure 4-2 BASIC DIMENSIONS OF INTERNAL TAPERED THREADS FOR CONDUIT FITTINGS FOR USE WITH THREADED RIGID METAL CONDUIT, THREADED INTERMEDIATE METAL CONDUIT, OR ELECTRICAL FITTING HAVING TAPERED EXTERNAL THREADS IN APPLICATIONS WHERE MAXIMUM THREAD FLANK ENGAGEMENT IS DESIRED (CUT THREADS—FOR ORDINARY LOCATION APPLICATIONS ONLY) 27

Figure 4-3 BASIC DIMENSIONS OF INTERNAL TAPERED THREADS FOR CONDUIT FITTINGS HAVING SHORT THREADS FOR USE WITH THREADED RIGID METAL CONDUIT, THREADED INTERMEDIATE METAL CONDUIT, OR OTHER ELECTRICAL FITTINGS HAVING TAPERED OR STRAIGHT EXTERNAL THREADS (CUT THREADS—FOR ORDINARY LOCATION APPLICATIONS ONLY) 28

Figure 4-4 BASIC DIMENSIONS OF INTERNAL STRAIGHT PIPE THREADS FOR CONDUIT FITTINGS HAVING SHORT THREADS ON BUSHINGS OR HUBS FOR USE WITH THREADED RIGID METAL CONDUIT, THREADED INTERMEDIATE METAL CONDUIT, OR OTHER ELECTRICAL FITTINGS HAVING TAPERED OR STRAIGHT EXTERNAL THREADS (CUT THREADS—FOR ORDINARY LOCATION APPLICATIONS ONLY) 29

Figure 4-5 BASIC DIMENSIONS OF ONE TYPE OF BUTTRESS THREAD FOR THERMOPLASTIC INSULATING BUSHINGS FOR USE WITH THREADED RIGID METAL CONDUIT, THREADED INTERMEDIATE METAL CONDUIT, OR ELECTRICAL FITTINGS HAVING TAPERED OR STRAIGHT EXTERNAL THREADS 30

Figure 4-6 BASIC DIMENSIONS OF EXTERNAL STRAIGHT PIPE THREADS FOR CONDUIT FITTINGS FOR USE WITH THREADED RIGID METAL CONDUIT COUPLINGS, THREADED INTERMEDIATE METAL CONDUIT COUPLINGS, OR OTHER ELECTRICAL FITTINGS HAVING TAPERED OR STRAIGHT INTERNAL THREADS (CUT THREADS—FOR ORDINARY LOCATION APPLICATIONS ONLY) 31

Copyright National Electrical Manufacturers Association
Provided by IHS under license with NEMA
No reproduction or networking permitted without license from IHS
Not for Resale

TABLE OF CONTENTS (contd)

Figure 4-7 BASIC DIMENSIONS OF EXTERNAL TAPERED THREADED FOR CONDUIT FITTINGS FOR USE WITH THREADS METAL CONDUIT COUPLINGS, THREADED INTERMEDIATE CONDUIT COUPLINGS, OR OTHER ELECTRICAL FITTINGS HAVING TAPERED OR STRAIGHT INTERNAL THREADS (CUT THREADS—FOR ORDINARY LOCATION APPLICATIONS ONLY) 32

Figure 4-8 BASIC DIMENSIONS OF INTERNAL STRAIGHT PIPE THREADS FOR ELECTRICAL FITTING LOCKNUTS FOR USE WITH ELECTRICAL FITTINGS HAVING TYPE NTC SHORT TAPERED EXTERNAL THREADS OR TYPE NSC STRAIGHT EXTERNAL THREADS 33

Figure 4-9 BASIC DIMENSIONS OF INTERNAL STRAIGHT PIPE THREADS FOR LOCKNUTS FOR USE WITH THREADED RIGID METAL CONDUIT AND THREADED INTERMEDIATE CONDUIT 34

Figure 4-10 SUGGESTED THREAD FORM 35

Figure 4-11 DIMENSIONS OF FLAT SURFACES SURROUNDING KNOCKOUTS 37

Figure 6-1 DIMENSIONS OF TEST APPARATUS AND SPECIMEN FOR FLAME TEST 41

Copyright National Electrical Manufacturers Association
Provided by IHS under license with NEMA
No reproduction or networking permitted without license from IHS
Not for Resale

September 1984

Foreword▲

This Standards Publication provides practical information concerning construction, test, performance, and manufacture of fittings, cast metal boxes, and conduit bodies for conduit and cable assemblies. These standards are intended for use by the electrical industry to provide guidelines for the manufacture and proper application of fittings, cast metal boxes, and conduit bodies for conduit and cable assemblies, and to promote the benefits of repetitive manufacture and widespread product availability.

One of the primary purposes of this standards publication is to encourage the manufacture and utilization of fittings, cast metal boxes, and conduit bodies which, in themselves, function in accordance with these standards. While some sections of this publication are intended to eliminate misunderstandings between manufacturers and users, all sections, when applied properly, contribute to safety in one way or another.

The proper manufacture of fittings, cast metal boxes, and conduit bodies is, however, only one consideration in promoting the safe utilization of electricity. Other safety considerations involve the joint efforts of the system designer, the various equipment manufacturers, the installer and the user. Information is provided herein to assist in the proper selection and use of fittings, cast metal boxes, and conduit bodies.

The following factors are vital to a safe electrical system and should be considered by the user in the selection and application of equipment covered by this publication:

1. Environmental conditions
2. System design
3. Equipment selection and application
4. Installation
5. Operating practices
6. Maintenance.

This Standards Publication covers design and performance requirements for fittings, cast metal boxes, and conduit bodies, and provides recommendations for their selection and use under normal or certain specific conditions. It is not intended to provide instructions concerning these factors, except as suitable equipment to meet specific needs that can be recognized in this publication. These standards have been promulgated with a view of promoting safety to persons and property when products conforming with them are properly selected, installed, and maintained in accordance with the *National Electrical Code*.

NEMA Standards Publications are periodically reviewed to meet changing conditions and technical progress. Users should buy the latest editions. Purchasers who wish to keep their copies of this publication up to date should fill out and return the postal card which is inserted between the cover and the title page.

Comments from the users of this Standards Publication will be welcomed. They should be sent to:

Manager, Engineering Department
National Electrical Manufacturers Association
2101 L Street, N.W.
Washington, D. C. 20037

▲ Revised.

Copyright National Electrical Manufacturers Association
Provided by IHS under license with NEMA
No reproduction or networking permitted without license from IHS
Not for Resale

History▲

This NEMA Standards Publication represents the result of many years of research and investigation by the members of NEMA, its predecessors, its Sections and Committees. It has been developed through continuing consultation among manufacturers, users, and national engineering societies. It reflects a study of the following publications, and credit is hereby given to all those whose standards have been helpful in the preparation of this document.

American National Standards Institute
1430 Broadway, New York, NY 10018

ANSI/ASME B1.20.1-1983	*General Purpose Pipe Threads*
ANSI/IEEE 268-1982	*Metric Practice*
ANSI/NFPA 70-1984	*National Electrical Code*
C80.1-1983	*Specification for Zinc Coated Rigid Steel Conduit*
C80.2-1983	*Specification for Enamelled Rigid Steel Conduit*
C80.3-1983	*Specification for Zinc Coated Electrical Metallic Tubing*
C80.5-1983	*Specification for Rigid Aluminum Conduit*

American Society for Testing and Materials
1916 Race Street, Philadelphia, PA 19103

B86-76	*Specification for Zinc Alloy Die Castings*

Canadian Standards Association, Inc.
178 Rexdale Boulevard, Rexdale, Ontario, Canada

C22.2 No. 18-1981	*Outlet Boxes, Conduit Boxes and Fittings*
C22.2 No. 41-1981	*Construction and Test of Grounding and Bonding Equipment*

National Bureau of Standards, U. S. Department of Commerce
Washington, DC 20234

H28 (1957), Part II	*Screw Thread Standards for Federal Service*

▲ Revised.

Copyright National Electrical Manufacturers Association
Provided by IHS under license with NEMA
No reproduction or networking permitted without license from IHS
Not for Resale

September 1984

Underwriters Laboratories Inc.
333 Pfingsten Road, Box 247, Northbrook, Il. 60062

UL 1	*Standard for Flexible Metal Conduit*
UL 4	*Standard for Armored Cable*
UL 6	*Rigid Metallic Conduit*
UL 44	*Standard for Rubber Insulated Wire and Cable*
UL 62	*Standard for Flexible Cord and Fixture Wire*
UL 94	*Standard for Tests for Flammability of Plastic Materials for Parts in Devices and Appliances*
UL 360	*Standard for Liquidtight Flexible Steel Conduit*
UL 467	*Standard for Grounding and Bonding Equipment*
UL 486 A & B	*Standard for Wire Connectors and Soldering Lugs*
UL 508	*Standard for Electric Industrial Control Equipment*
UL 514A	*Standard for Metallic Outlet Boxes*
UL 514B	*Fittings for Conduit and Outlet Boxes*
UL 719	*Standard for Non-metallic Sheathed Cable*
UL 797	*Electrical Metallic Tubing*
UL 854	*Standard for Service Entrance Cable*
UL 1242	*Intermediate Metal Conduit*

This document also reflects input from NEMA members of Sections other than the Conduit Fittings Section and from nonmembers of NEMA in both the public and private sector.

FB 1-1983 revises and supersedes FB 1-1977.

Scope▲

This Standards Publication applies to materials, construction, and performance of fittings, cast metal boxes, and conduit bodies used with round raceway systems and/or cable assemblies which distribute power in an electrical system as defined in the *National Electrical Code* under Section 90-2 Scope. The items described in this standards publication are defined in Section 1.

These standards apply only to items covered by the Family Tree of the Conduit Fittings Industry and not to explosion-proof and dust-ignition-proof fittings and enclosures for use in hazardous (classified) locations. Exceptions are: those ordinary-location fittings which are specifically permitted by the *National Electrical Code* in Class I, Division 2, and Class II and III hazardous (classified) locations.

▲ Revised.

Copyright National Electrical Manufacturers Association
Provided by IHS under license with NEMA
No reproduction or networking permitted without license from IHS
Not for Resale

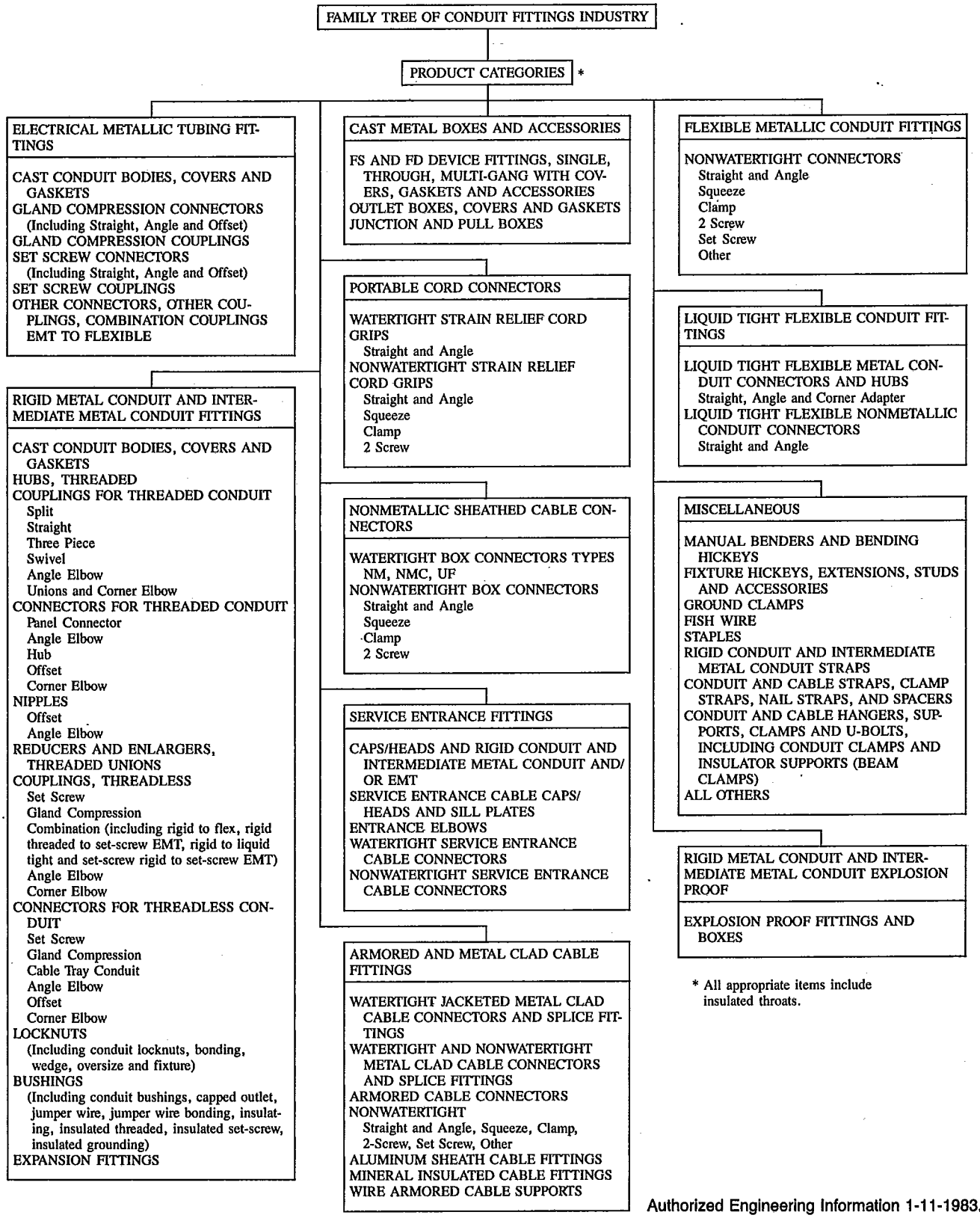

* All appropriate items include insulated throats.

Authorized Engineering Information 1-11-1983.

Copyright National Electrical Manufacturers Association
Provided by IHS under license with NEMA
No reproduction or networking permitted without license from IHS
Not for Resale

FITTINGS, CAST METAL BOXES, AND CONDUIT BODIES FOR CONDUIT AND CABLE ASSEMBLIES▲

Section 1
REFERENCED STANDARDS AND DEFINITIONS▲

1.1 REFERENCED STANDARDS▲

In this publication, reference is made to the standards listed below:

American National Standards Institute

ANSI C80.1-1983	*Zinc Coated Rigid Steel Conduit*
ANSI/ASME B1.20.1-1983	*General Purpose Pipe Threads*
ANSI/IEEE Std 268-1982	*Metric Practice*
ANSI/NFPA 70-1984	*National Electrical Code*
ANSI/UL 44-1983	*Rubber Insulated Wire and Cable*

American Society for Testing and Materials

ASTM B86-1976	*Specification for Zinc Alloy Die Castings*

National Bureau of Standards

H28 (1957); Part II	*Screw Thread Standards for Federal Services*

National Electrical Manufacturers Association

250-1979	*Enclosures for Electrical Equipment (1000 Volts Maximum)*

Underwriters Laboratories, Inc.

UL 6-1981	*Rigid Metal Conduit*
UL 94-1980	*Tests for Flammability of Plastic Materials for Parts in Devices and Appliances*
UL 467-1982	*Grounding and Bonding Equipment*
UL 514A-1983	*Metallic Outlet Boxes*
UL 514B-1982	*Fittings for Conduit and Outlet Boxes*
UL 1242-1983	*Intermediate Metal Conduit*

Copies of the above standards may be purchased from the following:

American National Standards Institute
1430 Broadway
New York, NY 10018

American Society for Testing and Materials
1916 Race Street
Philadelphia, PA 19103

National Bureau of Standards
U.S. Department of Commerce
Washington, DC 20234

National Electrical Manufacturers Association
Sales Office
2101 L Street, N.W.
Washington, DC 20037

Underwriters Laboratories Inc.
Publications Stock
333 Pfingsten Road
Northbrook, IL 60062

▲ Revised.

Copyright National Electrical Manufacturers Association
Provided by IHS under license with NEMA
No reproduction or networking permitted without license from IHS
Not for Resale

1.2 DEFINITIONS

1.2.1 General

An *angle connector* is a box connector intended to change the direction of the axis of a length of raceway or cable assembly entering a box or an enclosure.

NEMA Standard 1-11-1983.

A *box connector* is a connector whose primary function is to join threadless metal conduit, tubing, or cable assembly to knockout openings in a box or fitting.

NEMA Standard 1-11-1983.

A *bushing* is a means of preventing damage to the conductor insulation by providing a smooth well-rounded surface over which the conductor may be pulled and on which it may bear while it is in service.

1. A *bonding* bushing is one which provides means for reliably bonding the bushing to the enclosure with which it is used.
2. A *grounding bushing* is one which provides means for reliably connecting a bonding or ground conductor to the bushing.
3. An integral bushing means a constriction in a conduit or raceway entry providing a smooth, well rounded surface over which the conductors are pulled and may bear in service.

NEMA Standard 1-11-1983.

A *cable support fitting* is a fitting that provides means for supporting cables in a raceway system.

NEMA Standard 1-11-1983.

A *cable tray conduit fitting* is a fitting which attaches electrical conduit, mechanically and electrically, to a cable tray and assures a reliable bond.

NEMA Standard 1-11-1983.

A *connector* is a fitting which joins a raceway or cable assembly to a box or fitting and also performs other functions such as strain relief, sealing, grounding, and supporting.

NEMA Standard 1-11-1983.

A *copper free aluminum fitting* is one constructed of aluminum alloy that contains a maximum of 0.4 percent copper.

NEMA Standard 1-11-1983.

A *coupling* is a fitting intended to join two lengths of raceway.

NEMA Standard 1-11-1983.

A *design test* is a test which demonstrates conformance of a design with applicable standards; it is not intended to be a production test.

NEMA Standard 1-11-1983.

An *elbow* is a curved piece of raceway or fitting intended to change the direction of the axis of a raceway system.

A *capped elbow* is a 90° fitting, with equal length legs, that has a removable cover central to the fitting that is intended to provide access to the conduit system during wire pulling.

A *service entrance elbow* is a cast raintight 90-degree fitting, with removable cover, such that the outside end of the rear hub is in line with the back of the fitting body.

NEMA Standard 1-11-1983.

An *expansion fitting* is an in-line fitting which joins two sections of raceway and which permits movement of one of them in relation to the other.

NEMA Standard 1-11-1983.

Fittings for conduits and cable assemblies are accessories to a wiring system that primarily perform a mechanical function and, under the conditions defined in the *National Electrical Code* under Section 250-1 Scope, provide electrical continuity to the metallic raceway system and to metal-clad and metallic-sheathed cable assemblies.

▲NEMA Standard 9-20-1984.

A *locknut* is primarily a mechanical fastener which attaches an externally threaded conduit or connector to an unthreaded opening in a box or enclosure and may be capable of performing an electrical function.

1. A *conduit locknut* is a locknut which is used with threaded conduit and fittings having external tapered threads.
2. A *connector locknut* is a locknut which is used with box connectors having external threads.

NEMA Standard 1-11-1983.

A *nipple* is a male threaded fitting intended primarily to serve as a short raceway between closely spaced enclosures.

NEMA Standard 1-11-1983.

An *offset fitting* is a connector or coupling which offsets the axis of a raceway.

NEMA Standard 1-11-1983.

A *production test* is a quality control test and is not intended to be a design test.

NEMA Standard 1-11-1983.

▲ Revised.

Copyright National Electrical Manufacturers Association
Provided by IHS under license with NEMA
No reproduction or networking permitted without license from IHS
Not for Resale

A *pull fitting* is a fitting which permits pulling conductors at locations other than at a box.

NEMA Standard 1-11-1983.

A *sill plate* is a shield that protects a service entry into a building or structure.

NEMA Standard 1-11-1983.

A *split fitting* is a fitting split longitudinally so it can be placed in position after the wires have been drawn into the conduit, the two parts being held together by screws or other means.

NEMA Standard 1-11-1983.

A *strain relief connector* is a connector which secures cable assemblies or flexible cord to an enclosure and inhibits strain on the equipment or device terminals, due to pulling or twisting of the cable assembly.

NEMA Standard 1-11-1983.

Supports for conduits and cable assemblies are mechanical devices designed to support conduit, or cable assemblies. (Examples are hangers, straps, staples, and so forth).

NEMA Standard 1-11-1983.

A *terminator* is a fitting which joins an armored cable to a box, fitting, or raceway and also performs other functions such as strain relief, sealing, grounding, supporting, and so forth.

NEMA Standard 1-11-1983.

1.2.2 Raceways

A *raceway* is any enclosed duct for containing wires, cables, or bus bars.

Raceways shall be of metal or insulating material. The term includes rigid metal conduit, rigid nonmetallic conduit, intermediate metal conduit, flexible metal conduit, liquid-tight flexible metallic and nonmetallic conduit, electrical metallic tubing, underfloor raceways, cellular concrete floor raceways, cellular metal floor raceways, surface raceways, structural raceways, wireways and busways.

NEMA Standard 1-11-1983.

A *conduit* is a round raceway.

NEMA Standard 1-11-1983.

A *conduit body* is a separate portion of a conduit or tubing system that provides access, through a removable cover(s), to the interior of the system at a junction of two or more sections of the system or at a terminal point of the system.

Cast, sheet metal, nonmetallic and other boxes such as FS and FD, or larger boxes, and fittings such as capped elbows and service entrance elbows are not classified as conduit bodies.

NEMA Standard 1-11-1983.

Electrical metallic tubing (EMT) is a thin-walled metal conduit, constructed for providing a degree of protection for the wires or cables contained therein and for providing a ground.

NEMA Standard 1-11-1983.

Flexible metal conduit is a flexible conduit, constructed of metal, for providing a degree of protection for the wires or cables contained therein and may provide a ground.

NEMA Standard 1-11-1983.

Intermediate metal conduit (IMC) is a medium-wall metal conduit, constructed of metal, for providing a degree of protection for the wires or cables contained therein and providing a ground.

NEMA Standard 1-11-1983.

Liquid-tight flexible metal conduit is a flexible conduit, constructed with an outer liquid-tight nonmetallic sunlight-resistant jacket, for providing a degree of protection for the wires or cables contained therein and may provide a ground after the conduit and its fittings are installed in place.

NEMA Standard 1-11-1983.

Liquid-tight flexible nonmetallic conduit is a flexible conduit, constructed of nonmetallic tubing, for providing a degree of protection for the wires or cables contained therein.

NEMA Standard 1-11-1983.

Rigid metal conduit is a heavy-wall conduit, constructed of metal, for providing a degree of protection for the wire or cables contained therein and providing a ground.

NEMA Standard 1-11-1983.

1.2.3 Boxes and Enclosures

A *box* (electrical) is a container without a cover but with means for mounting a cover; it usually has provision for the entrance of conductors.

NEMA Standard 1-11-1983.

An *enclosure* is a surrounding case constructed to provide a degree of protection to personnel against incidental contact with the enclosed equipment and to provide a degree of protection to the enclosed equipment against specified environmental conditions.

NEMA Standard 1-11-1983.

Copyright National Electrical Manufacturers Association
Provided by IHS under license with NEMA
No reproduction or networking permitted without license from IHS
Not for Resale

Flush mounting means designed to have a minimal front projection when set into and secured to a flat surface.

NEMA Standard 1-11-1983.

An *FS* or *FD box* is a cast metal box designed for attachment to threaded metal conduit to accommodate single strap wiring devices and may be used as a pull or junction box. The box is designed for surface mounting in single or multiple gang. It has a depth in accordance with Figure 3-2 and is designed for wet locations when used with a suitable cover(s).

NEMA Standard 1-11-1983.

The design may accommodate other specific environmental applications when used with suitable covers and accessories. Covers designed by different manufacturers are not necessarily interchangeable.

Authorized Engineering Information 1-11-1983.

A *junction box* is a box with a cover; it joins different runs of raceways or cables, or both, and provides space for the connection and branching of the enclosed conductors. There are no openings in the cover.

NEMA Standard 1-11-1983.

A *knockout* is a portion of the wall of a box or enclosure that may be removed readily at the time of installation in order to provide an unthreaded opening for the attachment of raceway, cable assemblies, or their fittings.

NEMA Standard 1-11-1983.

An *outlet box* is a box used in an electrical wiring system for containing wire, splices, or devices. It has provisions for the entry of conduit or cable assemblies and for the attachment of a separate cover which is used to close the box or provide support for devices or fixtures. With the cover in place, the enclosure guards against accidental contact with live parts and protects its environment from faults occurring within the enclosure.

NEMA Standard 1-11-1983.

A *pull box* is a box with a cover that is installed in one or more runs of raceway to facilitate pulling the conductors through the conduit system. The cover has no provision for the entry of rigid conduit or electrical metallic tubing. There are no openings in the cover.

NEMA Standard 1-11-1983.

Surface mounting means designed to be secured to an exposed surface by means of external projections or to have a flat back where mounting screw holes can be drilled.

NEMA Standard 1-11-1983.

1.2.4 Environmental Conditions

Concrete tight means so constructed that embedment in freshly mixed concrete will not result in the entrance of concrete under specified test conditions.

NEMA Standard 1-11-1983.

Corrosion-resistant means so constructed, protected, or treated that corrosion will not exceed specified limits under specified test conditions.

NEMA Standard 1-11-1983.

Damp locations are partially protected locations under canopies, marquees, roofed open porches, and similar locations, and interior locations subject to moderate degrees of moisture, such as some basements, some barns and some cold-storage warehouses.

NEMA Standard 1-11-1983.

Dry locations are installations not normally subject to dampness or wetness. A location classified as dry may be temporarily subject to dampness or wetness as in the case of a building under construction.

NEMA Standard 1-11-1983.

Dust-ignition-proof means so constructed (1) as to exclude ignitible amounts of dusts which might affect performance or rating, and (2) when installed and protected in accordance with the *National Electrical Code*, will not permit arcs, sparks, or heat which is otherwise generated or liberated inside of the enclosure to cause the ignition of exterior accumulations or atmospheric suspensions of a specified dust on or in the vicinity of the enclosures.

▲NEMA Standard 9-20-1984.

Explosion proof means so constructed as to be capable of (1) withstanding an explosion of a specified gas or vapor within the enclosure, (2) preventing the ignition of a specified gas or vapor surrounding the enclosure by sparks, flashes, or explosion of the gas or vapor within, and (3) operating at such an external temperature that a surrounding flammable atmosphere will not be ignited thereby.

NEMA Standard 1-11-1983.

▲ Revised.

Copyright National Electrical Manufacturers Association
Provided by IHS under license with NEMA
No reproduction or networking permitted without license from IHS
Not for Resale

Hazardous (classified) locations are those areas which contain hazardous materials in sufficient quantity to create an explosion. See Article 500 of the *National Electrical Code*.

NEMA Standard 1-11-1983.

Hazardous materials are those gases, vapors, combustible dusts, fibers, or flyings which are explosive under certain conditions.

▲NEMA Standard 9-20-1984.

Indoor locations are those areas which are protected from exposure to the weather.

NEMA Standard 1-11-1983.

Oil-resistant gaskets are those made of material which is resistant to oil or oil fumes.

NEMA Standard 1-11-1983.

Oiltight means so constructed as to exclude oils, coolants, and similar liquids under specified test conditions.

NEMA Standard 1-11-1983.

Outdoor locations are those areas which are exposed to the weather.

NEMA Standard 1-11-1983.

Raintight means so constructed or protected as to exclude rain under specified test conditions.

NEMA Standard 1-11-1983.

Rust-resistant means so constructed, protected, or treated that rust will not exceed a specified limit under a specified rust-resistance test.

NEMA Standard 1-11-1983.

Wet locations are installations underground, in concrete slabs, or masonry in direct contact with the earth; also locations subject to saturation with water or other liquids and locations exposed to weather and unprotected.

NEMA Standard 1-11-1983.

Copyright National Electrical Manufacturers Association
Provided by IHS under license with NEMA
No reproduction or networking permitted without license from IHS

Not for Resale

Section 2
GENERAL STANDARDS FOR FITTINGS▲

2.1 GENERAL REQUIREMENTS FOR FITTINGS

1. Fittings for use with raceway systems or with cable assemblies, or both, to distribute power in an electrical system shall provide one or more of the following:

a. Means of physically connecting conduits or cable assemblies, or both, to each other or to an enclosure.
b. Electrical and mechanical protection to the conductors during and after the installation.
c. Electrical continuity and the capacity to conduct safely any fault current likely to be imposed on them in accordance with the *National Electrical Code*.
d. Protection to personnel from coming into contact with live conductors which are part of a raceway system or cable assembly, or both.
e. Protection to personnel or a building and its contents from the effects of a fault current by continuing the electrical path back to the neutral of the system, to facilitate the operation of the overcurrent protection device and not add appreciably to the low impedance of the raceway system.
f. Containment of a fault and the effects of a fault within a metallic raceway system, thereby aiding in the prevention of fire from arcing faults.
g. A seal between the conduits and the conductors entering an enclosure; or a seal between an enclosure and a raceway or cable assembly; or both.
h. A support to conductors in a raceway system; or support of a cable assembly to an enclosure or a fitting; or both.
i. Protection against damage to enclosures, equipment, building, or the raceway caused by linear thermal expansion and contraction of the raceway.
j. Protection against the raceway's causing damage to the structure when one structure moves in relation to another structure.
k. Protection against vibrating equipment transmitting vibrations to the building, other equipment, and so forth, through the raceway connection.
l. Protection against the spread of fire or products of combustion, or both.
m. Protection against the particular environment.

2. A fitting intended to accommodate a range of conduit or cable assemblies, or both, shall meet the performance requirements for that fitting on all conduit or cable assembly, or both, within that range.

3. A fitting shall have not less than the minimum corrosion protection as per 2.2.4.1 or 2.2.5.

▲NEMA Standard 9-20-1984.

For more severe applications a higher level of protection as per 2.2.4.2 is optional.▲

Authorized Engineering Information 9-20-1984.

2.2 METALLIC MATERIALS

2.2.1 Materials and Wall Thickness

Table 2-1 may be used as a guide in selecting materials and wall thicknesses of fittings. Other materials and thicknesses may be used.▲

Authorized Engineering Information 9-20-1984.

Fittings shall meet the applicable performance requirements given in this standards publication.

2.2.2 Coatings on Metallic Surfaces

2.2.2.1 Nonconductive Coatings

Nonconductive coatings such as paints, enamels, and similar coatings shall not be applied to fittings at threads, contact points, or contact surfaces unless the coatings are removed with the installation of the fittings or the fittings are so designed as to make such removal unnecessary.

2.2.2.2 Conductive Coatings

Conductive coatings applied to fittings at threads, contact points, or contact surfaces shall not prevent the fittings from meeting the electrical continuity test described in 6.9.

▲ Revised.

Copyright National Electrical Manufacturers Association
Provided by IHS under license with NEMA
No reproduction or networking permitted without license from IHS
Not for Resale

Table 2-1
WALL THICKNESS OF FITTINGS

Material of Fitting	Minimum Wall Thickness of Unthreaded Parts, Inches	Minimum Thickness at Base of Threads, Inches
Sheet steel or machined steel	0.0250	0.0250* 0.0200†
Sheet aluminum	0.031	0.031
Die-cast aluminum, die-cast zinc, or malleable iron	1/16‡	1/32
Sand-cast aluminum, steel, bronze, or cast iron	1/8	3/32** 1/16††

* At the base of cut threads.
† At the base of rolled threads.
‡ A flexible-conduit or armored-cable connector or a fitting for electrical metallic tubing, of die-cast zinc, that employs a set screw for securing the cable or conduit and that is ribbed or otherwise reinforced may be less than 1/16 inch but not less than 3/64 inch thick, provided that the threads of the screw or fitting are not stripped, the fitting is not cracked or otherwise impaired, and the conduit or cable is not damaged when a No. 8 set screw is tightened with a torque of 20 pound-inches and larger screws are tightened with a torque of 35 pound-inches. A fitting for electrical metallic tubing, flexible conduit, armored cable, or nonmetallic-sheathed cable of other than the set screw type and of die-cast zinc may have a wall thickness of less than 1/16 inch but not less than 3/64 inch if it is ribbed or otherwise reinforced.▲
** At the base of threads in fittings of the 1-inch and larger trade sizes.
†† At the base of threads in fittings of the 3/4 inch and smaller trade sizes.

2.2.3 Damp or Wet Locations

Metallic fittings used in damp or wet locations shall be made of metal suitable for use with that of the raceway, or the fittings shall be so protected or installed where they come into contact with the raceway as to minimize the possibility of electrolysis.

2.2.4 Ferrous Materials

2.2.4.1 Rust-Resistance

The exterior of all ferrous fittings, including fasteners, shall be considered rust-resistant if it meets the requirements of 6.4. Ferrous metal fittings having a zinc or cadmium coating thickness, or both, in accordance with Table 2-2, or having equivalent protection, and stainless steel fittings shall be considered as meeting this requirement without test.

NEMA Standard 1-11-1983.

2.2.4.2 Corrosion-Resistance▲

If conditions are more severe than those represented by the design test for rust-resistance in 6.4, a corrosion-resistant fitting which meets the requirements of 6.5. For applications involving severe or unusual corrosive environments, additional corrosion protection may be required, and the fittings manufacturer should be consulted.

Authorized Engineering Information 9-20-1984.

2.2.5 Nonferrous Materials

2.2.5.1 Corrosion Resistance▲

Most nonferrous materials such as copper, zinc, aluminum, and their alloys are generally suitable for indoor and outdoor applications without the need for a protective coating. For applications involving severe or unusual corrosive environments, additional corrosion protection or materials having special characteristics may be required, and the fittings manufacturer should be consulted.

Authorized Engineering Information 9-20-1984.

2.2.5.2 Zinc Die Castings

Zinc die castings shall meet the minimum requirements for die castings AG40A and AC41A given in ASTM B86.

NEMA Standard 1-11-1983.

▲ Revised.

Copyright National Electrical Manufacturers Association
Provided by IHS under license with NEMA
No reproduction or networking permitted without license from IHS
Not for Resale

Table 2-2
THICKNESS OF ZINC OR CADMIUM COATING

Material of Fitting	Average Thickness of Coating, Inches* Outside Surface†	Inside Surface
Sheet steel or machined steel	0.0005††	0.00015**
Cast iron or malleable iron	0.00015	**

* Thickness shall be determined by the average of three readings, on three different surfaces, where possible, using a reliable electronic, magnetic, chemical, or electro-chemical method. No single reading shall be less than 50 percent of the value specified. Cut edges, including punched and threaded holes, of a fitting that is made of pregalvanized sheet steel shall be exempted from this requirement.

† Grounding devices designed for use with water pipe or ground rod shall have a minimum coating thickness of 0.001 inch.

†† Locknuts, bushings, or other fittings intended for assembly inside of a box or enclosure shall have a minimum coating thickness of 0.00015 inch.

** The minimum thickness of the coating inside fittings of cast iron or malleable iron and inside fittings for armored cable, flexible-steel conduit, or nonmetallic-sheathed cable is not specified.

2.3 NONMETALLIC MATERIALS

2.3.1 Materials Used for Insulating Purposes

A thermoplastic or thermosetting material used as a fitting or as a part of a fitting for insulating purposes shall be assigned a temperature rating in accordance with 6.11.

Insulating materials shall meet the requirements of the flame test described in 6.8.

A composition that does not meet the flammability test requirements but is acceptable for the application shall be permitted to be used for a bushing—of the type used in boxes—or similar fitting that will not be part of the enclosure of wiring, splices, or live parts, and, except for a fitting for liquidtight flexible metal conduit, will not be depended upon for the mechanical assembly of parts of a wiring system.

2.3.2 Elastomeric Materials

Components made of rubber or other elastomeric materials shall meet the requirements of the elastomeric materials deterioration test described in 6.10.

NEMA Standard 1-11-1983.

2.4 ELECTRICAL CONTINUITY

Fittings which are required to provide electrical continuity shall meet the requirements of the electrical continuity test described in 6.9.

NEMA Standard 1-11-1983.

In addition to this electrical continuity test, some fittings require a thermal capacity test in accordance with UL 467.▲

Authorized Engineering Information 9-20-1984.

2.5 TORQUE REQUIREMENTS

Fittings shall meet the torque requirements applicable to the specific type of fitting. See 3.1.

NEMA Standard 1-11-1983.

2.6 ASSEMBLY

A fitting, when properly assembled to a raceway or a cable assembly, or both, shall not injure the raceway or cable assembly.

NEMA Standard 1-11-1983.

2.7 THREAD DIMENSIONS

See Section 4.

2.8 BOX CONNECTORS

Box connectors which connect to an unthreaded opening in a metal box or fitting shall provide reliable mechanical and, where applicable, electrical connection to the various types, surfaces, and thicknesses of metal (as shown in Table 2-3) to which they are likely to be attached and shall meet this requirement when tested with plated, painted, or enamelled metal.

Table 2-3▲

Trade Size of Conduit, Inches	Metal Thickness, Inches
⅜–1	0.026-0.091
1¼–2	0.032-0.091
2½–6	0.032-0.153

▲ Revised.

Copyright National Electrical Manufacturers Association
Provided by IHS under license with NEMA
No reproduction or networking permitted without license from IHS

Not for Resale

A box connector shall adequately close the knockout opening (see Table 4-1) after the conduit or cable assembly is clamped in place as determined by the requirements for the rod entry test described in 6.2.▲

2.8.1 Box Connectors With External Straight Threads

Box connectors with external straight threads that require a connector locknut to connect them to a knockout opening in a sheet metal enclosure shall be provided with such a locknut threaded onto the externally threaded end. The thread projection, when measured from the shoulder stop to the end of the threads along the major axis of the threaded projection, shall be not less than that specified in Table 2-4.

2.8.2 Box Connectors With External Tapered Threads

Box connectors with external tapered threads need not be provided with a locknut. The thread projection of box connectors with external tapered threads, when measured from the shoulder stop to the end of the thread along the major axis of the threaded projection, shall be not less than that specified in Table 2-4.

NEMA Standard 9-20-1984.

Consideration should, however, be given to longer thread lengths if the connector is to be used in threaded openings or with locknuts and bushings.

Authorized Engineering Information 1-11-1983.

2.8.3 Box Connectors With Internal Threads

Box connectors with noninterchangeable internal threads, which utilize a male bushing to secure the connector to the box or enclosure, shall be provided with the bushing.

2.8.4 Box Connectors Without Threads

Box connectors without threads shall be provided with all necessary means to secure the connector to the box or enclosure.

2.8.5 Angle Fittings

Angle fittings shall have a removable cap or cover to facilitate the installation of wires if the radius of bend is less than that given in Table 2-5. *Exception:* angle connectors which attach a raceway, cable, or cord system to an enclosure.

NEMA Standard 1-11-1983.

▲ Revised.

Table 2-4
MINIMUM THREAD PROJECTION OF BOX CONNECTORS

Trade Size of Connector, Inches	Minimum Thread Projection, Inches
⅜	0.299
½	0.323
¾	0.338
1	0.391
1¼	0.391
1½	0.391
2	0.408
2½	0.654
3	0.654
3½	0.717
4	0.717
5	0.779
6	0.841

Table 2-5
RADIUS OF BEND OF ANGLE FITTINGS

Trade Size of Conduit, Inches	Minimum Radius to Center of Fitting, Inches†
½	4
¾	4½
1	5¾
1¼	7¼
1½	8½
2	9½
2½	10½
3	13
3½	15
4	16
5	24
6	30

† See 2.8.5 for exceptions.

2.9 OFFSET FITTINGS

Offset fittings, except those used with liquid-tight flexible metal conduit and liquid-tight nonmetallic conduit, shall have a removable cap or cover to facilitate the installation of wires if the offset is greater than 1 inch and if the axis of the offsetting section has any angle greater than 35 degrees to the axis of the raceway.

NEMA Standard 1-11-1983.

Copyright National Electrical Manufacturers Association
Provided by IHS under license with NEMA
No reproduction or networking permitted without license from IHS
Not for Resale

2.10 CROSS-SECTIONAL AREA

Fittings (such as angle connectors, offset nipples, elbows, and so forth) which change the direction of a raceway or cable assembly shall have an internal cross-sectional area at all points not less than 80 percent of that provided by a bushing, having a minimum throat diameter, in accordance with Table 2-6.

NEMA Standard 1-11-1983.

Table 2-6
INSIDE THROAT DIAMETERS OF FITTINGS AND BUSHINGS

Trade Size of Fitting, Inches	Inside Throat Diameter, Inches	
	Minimum	Maximum
⅜	0.444	0.493
½	0.560	0.622
¾	0.742	0.824
1	0.944	1.049
1¼	1.242	1.380
1½	1.449	1.610
2	1.860	2.067
2½	2.222	2.469
3	2.761	3.068
3½	3.193	3.548
4	3.623	4.026
5	4.542	5.047
6	5.458	6.065

2.11 CONDUIT LOCKNUTS FOR THREADED RIGID METAL CONDUIT AND INTERMEDIATE METAL CONDUIT

2.11.1 Construction Requirements

1. Conduit locknuts shall be provided with notches or other means for tightening.

2. The maximum outside dimension shall not exceed the maximum outside diameter specified in Figure 4-9.

3. Conduit locknuts shall "substantially close" the knockout opening with the conduit offset to present a worst case condition. Checking for conformity shall be by means of the rod entry test as specified in 6.2.

4. Conduit locknuts shall have internal threads, or an equivalent means, sized in accordance with the trade size and number of threads per inch shown in Figure 4-9, to assure assembly and performance with the appropriate size conduit as specified in 2.11.2.▲

5. A conduit locknut shall comply with 2.11.2.1, 2.11.2.2, and 2.11.2.3, or the dimensional requirements of Figure 4-9.●

Suggested Standard for Future Design 9-20-1984.

▲ Revised.
● Added.

2.11.2 Functional Requirements

2.11.2.1 ASSEMBLY

1. Samples of conduit locknuts shall be assembled on the appropriate size threaded rigid conduit. The assembly is to be made utilizing: a single conduit locknut, a threaded metal bushing conforming to threading specifications indicated in Figure 4-4, and a sheet metal box or steel plate having a minimum thickness not less than the allowable thickness for the appropriate trade size knockout.

2. Initially, the installation is to be made only handtight (defined from here on as the application of 7 inch-pounds of torque to the assembly after the surface of the locknut is in intimate contact with the box or steel plate surface).

3. The rigid conduit is to be secured to prevent it from turning, and the locknut is to be further tightened until it has rotated at least 90 degrees.

4. At the end of the above assembly sequence, the locknut shall not be significantly damaged. Evidence of breakage, cracking, loosening of the assembly, jumping of threads on the rigid conduit, or stripping of the locknut's threads shall be unacceptable.

2.11.2.2 STRENGTHS

1. Another set of conduit locknut samples shall be selected and assembled, in the intended manner, utilizing a length of threaded rigid conduit and a ⅛-inch-thick steel plate with appropriate size knockout.

2. The installation is to be made handtight (as defined above) utilizing two locknuts, one on each side of the knockout.

3. Either of the locknuts is to be further tightened by rotating it at least 90 degrees, utilizing any convenient means, while keeping the other locknut stationary.

4. The assembly shall then be subjected to the electrical continuity test as per 6.9.

5. The same assembly shall then be subjected to the bend test as per 3.3 par. 6 for connectors.

6. At the conclusion of the above bend test, the assembly is again to be subjected to a repeated electrical continuity test. The voltage drop of this repeated test shall not exceed 15 millivolts.

7. Finally, the same assembly is to be subjected to a direct pull of the value given in Table 6-1 for a duration of one minute. There shall be no sign of damage or loosening up of the assembly at the conclusion of these test sequences.

NEMA Standard 1-11-1983.

2.11.2.3 OTHER▲

The following requirements are optional.

1. Assemble the conduit locknut samples as per 2.11.2.2, pars. 1 through 3.

Copyright National Electrical Manufacturers Association
Provided by IHS under license with NEMA
No reproduction or networking permitted without license from IHS
Not for Resale

2. For additional ratings such as concrete-tight, raintight, or submersible, the assembly shall be subjected to the applicable test requirements given in Section 6.

Authorized Engineering Information 9-20-1984.

2.12 BUSHINGS

2.12.1 General Requirements

Bushings shall be one of the following types:

1. Insulating bushing (nonmetallic).
2. Insulated bushing (metallic collar with insulated shoulder).
3. Insulating liner (used in the throat of box connector fittings).
4. Outlet bushing (metallic or nonmetallic collar with an insulating material cover having holes for the individual conductors).
5. Noninsulating bushing (metallic).

Bushings and liners (except outlet bushings) for rigid conduit shall have a smooth, well-rounded surface at the throat. The throat diameter shall be within the limits given in Table 2-6. A bushing shall be provided with ribs or the equivalent to permit easy tightening.

If all of a bushing or the throat of a bushing is made of a thermoplastic or thermosetting insulating material:

1. The material shall meet the requirements of the flame test described in 6.8, using a test specimen 4 inches square and of a thickness equal to the minimum thickness of the bushing or throat.
2. The bushing or throat shall not be completely consumed when a sample of the bushing is mounted on a 1-foot length of conduit and suspended at an angle of 45 degrees to the axis of the test flame. The tip of the inner blue cone of the flame shall be applied to the upper edge of the inner diameter of the bushing.

Exception: A bushing or throat of a bushing that is made of a material that has been investigated and found to comply with the requirements in UL 94, *Standard for Tests for Flammability of Plastic Materials for Parts in Devices and Appliances*. This standard is for materials designated as 94V-0, 94V-1, or 94V-2.

Exception: A bushing of the type for use in boxes or other enclosures.

3. A bushing or throat shall be assigned a temperature rating in accordance with the test described in 6.11.

2.12.2 Grounding and Bonding Bushings

Metallic bushings of the grounding or bonding type, or both, shall meet the construction and test requirements of 2.12.1 and UL 467.

NEMA Standard 1-11-1983.

2.13 GROUND CLAMP

Ground clamps shall meet the construction and test requirements of UL 467.

NEMA Standard 1-11-1983.

2.14 MARKING

1. A fitting shall be legibly marked with the name or trademark of the manufacturer. If the catalog number or an equivalent designation is not marked on the fitting, it shall appear on the smallest shipping container in which the fitting is packaged.

2. Except as noted in 2.14 pars. 2a through 2d, an insulating or insulated bushing, a fitting for use as a connector and having an insulating throat, and an insulating part for use as the throat of such a bushing or fitting shall be so marked with its temperature rating that the marking is visible after installation. (See 6.11.)

a. If an insulating bushing or an insulating part used as the throat of a bushing or fitting has insulating material that is either black or brown in color, it must have a temperature rating of 150°C.

NEMA Standard 1-11-1983.

Marking of the temperature rating is at the manufacturer's option.

b. If an insulating bushing or an insulating part used as the throat of a bushing or fitting has insulating material in any color but black or brown and is rated 90°C, it need not be marked with a temperature rating (manufacturer's option).

Authorized Engineering Information 1-11-1983.

c. If an insulating bushing or an insulating part used as the throat of a bushing or fitting has insulating material in any color but black or brown and is rated for more than 90°C, it shall be marked with the temperature rating (for example 105°C); the marking shall be visible after installation.

d. If an insulating bushing or an insulating part used as the throat of a bushing or fitting has insulating material in any color but black or brown and is rated for more than 90°C but is not marked with the temperature rating, it is considered to be rated 90°C only.

NEMA Standard 1-11-1983.

3. It is recommended that the following information be provided on the fitting, the smallest shipping container, or an instruction sheet:

a. Permissive or restrictive usage to designate the intended use of the fitting.
b. Instructions for fittings requiring unique installation techniques.

Authorized Engineering Information 1-11-1983.

Copyright National Electrical Manufacturers Association
Provided by IHS under license with NEMA
No reproduction or networking permitted without license from IHS
Not for Resale

Section 3
REQUIREMENTS FOR SPECIFIC TYPES OF FITTINGS, CAST BOXES, AND CONDUIT BODIES

3.1 TYPES

All fittings shall meet the general applicable requirements given in Section 2 of this standards publication, and shall meet the specific detailed requirements applicable for the type of fitting listed below:

1. Fittings for threaded rigid metal conduit and intermediate metal conduit—3.2.
2. Fittings for unthreaded rigid metal conduit, intermediate metal conduit and electrical metallic tubing—3.3.
3. Fittings for armored cable and flexible metal conduit—3.4.
4. Connectors for nonmetallic sheathed cable—3.5.
5. Fittings for metal-clad cable (armored and interlocked armored)—3.6.
6. Fittings for mineral-insulated metal-sheathed cable—3.7.
7. Fittings for service entrance cable—3.8.
8. Sill plates—3.9.
9. Fittings for liquid-tight flexible metal conduit—3.10.
10. Fittings for service entrance heads (caps, hoods) elbows (ells)—3.11.
11. Cast metal boxes, conduit bodies, and covers—3.12 and 3.13.●

See the *National Electrical Code* for definitions of the various types of cables.

NEMA Standard 9-20-1984.

3.2 FITTINGS FOR THREADED RIGID METAL CONDUIT AND INTERMEDIATE METAL CONDUIT

1. A fitting, other than a coupling or locknut, which is internally threaded for attachment to rigid metal conduit or intermediate metal conduit, shall be provided with a positive end stop for the conduit and an integral bushing or an equivalent smoothly rounded surface to prevent abrasion of insulation on the conductors entering the fitting from the conduit. The throat diameter of the end stop shall be in accordance with Table 2-6.

2. Fittings which are internally threaded to receive rigid metal conduit or IMC shall withstand the tightening torques listed in Table 6-1, when assembled to rigid metal conduit or intermediate metal conduit without stripping of threads and without injury to the fitting.

Exception: Fittings for threaded metal conduit or IMC that are not intended to be threaded onto the conduit may be exempted from the torque test. The fittings, however, when installed in the intended manner, shall meet all functional requirements indicated in 3.3.

3. Fittings for threaded metal conduit and IMC shall be designed to conduct any anticipated ground fault current likely to be imposed on them.▲

NEMA Standard 9-20-1984.

3.3 FITTINGS FOR UNTHREADED RIGID METAL CONDUIT, INTERMEDIATE METAL CONDUIT, AND ELECTRICAL METALLIC TUBING

1. A threadless connector for rigid metal conduit and intermediate metal conduit shall have a smooth well-rounded end stop with a throat diameter within the limits indicated in Table 2-6.

2. A threadless coupling for rigid metal conduit and intermediate metal conduit shall be provided with a centering stop having an effective diameter no less than the minimum throat diameter indicated in the second column of Table 2-6 for the smallest trade size of raceway intended to be accommodated.

3. A threadless connector for electrical metallic tubing shall have a smooth well-rounded end stop with a throat diameter within the limits indicated in Table 3-1.

4. A threadless coupling for electrical metallic tubing shall be provided with a centering stop having an effective diameter no less than the minimum throat diameter indicated in the third column in Table 3-1.

5. A threadless fitting for electrical metallic tubing, when installed as it would be in service, shall not decrease the internal diameter of the tubing by more than 15 percent and shall not deform the end of the tubing even when the latter is displaced ¼ inch from the end stop. One sample shall be assembled to a length of tubing in the intended manner, and another sample shall be assembled to a length of tubing, as intended, except that the tubing shall be displaced ¼ inch from the end stop. After assembly, the tubing shall permit the passage of a plug *go* gage having the diameter indicated in Table 3-1.

6. A threadless fitting for rigid metal conduit, intermediate metal conduit, or electrical metallic tubing shall be subjected to the electrical continuity test in accordance with 6.9, a bending test in accordance with 3.3 par. 6d, an electrical continuity test (repeated), and a pull-out test in accordance with 3.3 par. 6f, in the order given. The same samples shall be used throughout and shall not

▲ Revised.
● Added.

Copyright National Electrical Manufacturers Association
Provided by IHS under license with NEMA
No reproduction or networking permitted without license from IHS
Not for Resale

Table 3-1

Trade Size of Coupling, Connector for Electrical Metallic Tubing, Inches	Maximum Throat Diameter of End Stop, Inches	Minimum Throat Diameter Under Threaded Section, Inches	Diameter of Plug Gauge, Inches ±0.001
⅜	0.493	0.444	0.419
½	0.622	0.560	0.529
¾	0.824	0.742	0.700
1	1.049	0.944	0.892
1¼	1.380	1.242	1.173
1½	1.610	1.449	1.369
2	2.067	1.860	1.757
2½	2.731	2.222*	2.321
3	3.356	2.761*	2.853
3½	3.834	3.193*	3.259
4	4.334	3.623*	3.684

*A reduced diameter under the threaded section shall not result in a sudden reduction in the inside diameter of the raceway.

be conditioned in any way during the tests. Not less than six samples shall be tested except that, if a line of fittings for a range of sizes is being investigated, not less than three samples of each trade size shall be tested.

a. The samples of the threadless fitting shall be assembled in the intended manner to short lengths of conduit or tubing of the proper size, and the raceway shall be pushed against the end or centering stop of the fitting before the latter is tightened. Except as noted below, the tightening torque to be applied to the fitting shall be that given in Table 6-1 for threadless fittings. A fitting that can be tightened by means of a screwdriver shall be tightened with a torque of 35 pound-inches except that any fitting using a No. 8 screw shall be tightened with a torque of 20 pound-inches. A bolt-head screw (unslotted, direct bearing, or securing a clamp) shall be wrench tightened with a torque of 160 pound-inches.

b. A threadless fitting provided with a tightening nut shall have the tightening torque applied by means of an open box or crescent wrench, except that a nut, which is not provided with flats suitable for use with such wrenches, shall be tightened by means of a pipe wrench.

c. A threadless fitting shall not become separated from the conduit or tubing when subjected to the bending test described in 3.3 par. 6d.

d. For testing a threadless fitting, the assembly, with the fitting at the center, shall be placed on supports 30 inches apart as illustrated in Figure 3-1. The bending load indicated in Table 6-1 shall be suspended from the center of the fitting for 60 seconds, during which time the fitting and the lengths of conduit shall be rotated through one complete revolution about the major axis of the assembly.

If the sample being tested is other than a coupling, the supports shall be separated by an additional distance (more than 30 inches) equal to the distance between the ends of the conduit in the box or fitting to give the required bending moment on the sample under test.

e. After the threadless fitting has been subjected to the bending test, the voltage drop across the fitting shall be not more than 15 millivolts in a repeated electrical continuity test performed as described in 6.9.

f. A threadless fitting shall withstand for 1 minute, without injury and without pulling loose from the raceway, a direct pull of the value given in Table 6-1.

7. Concrete-tight threadless fittings shall meet the requirements given in 6.7.

8. Raintight threadless fittings shall meet the requirements given in 6.3.

9. Fittings for unthreaded rigid metal conduit, intermediate metal conduit, and electrical metallic tubing shall be designed to conduct any anticipated ground fault current likely to be imposed on them.▲

▲ Revised.

Copyright National Electrical Manufacturers Association
Provided by IHS under license with NEMA
No reproduction or networking permitted without license from IHS
Not for Resale

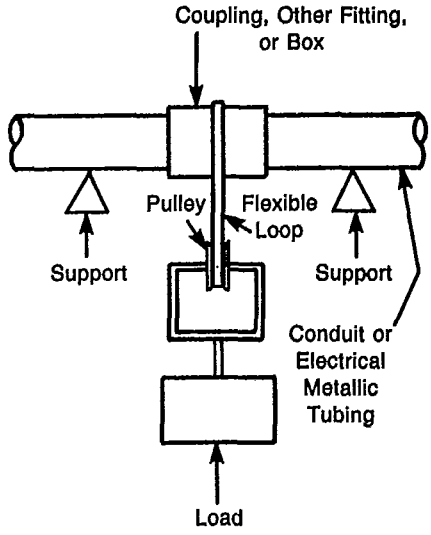

Figure 3-1
BENDING TEST FOR THREADLESS FITTINGS

3.4 FITTINGS FOR ARMORED CABLE AND FLEXIBLE METAL CONDUIT

1. A connector for armored cable or flexible metal conduit shall have a smooth well rounded end stop which will prevent the cable armor or conduit from passing through. The end stop of a flexible-metal-conduit fitting, other than an angle connector, shall completely encircle the end of the conduit when the latter is installed. The throat of the fitting shall be smooth and well rounded. The maximum and minimum inside diameter of the end stop of a flexible-metal-conduit connector shall be within the limits indicated in Table 3-2. These requirements do not apply to the shoulder of a fitting which is secured to flexible metal conduit by insertion inside the conduit.

2. The design of an armored-cable connector shall be such that the anti-short bushing will be held in place and will be visible after installation without disturbing the wiring.

3. A flexible metal conduit fitting which fits inside the raceway (screw-in type) in the ⅜-, ½-, and ¾-inch trade size shall not exceed the diameters given in Table 3-3.

4. Direct-bearing set screws used in a connector for armored cable or flexible metal conduit shall be not smaller than No. 10 and shall be of the tangential type, except that a set screw of the radial type (the axis of both the screw and the cable in the same plane) can be used in a connector for flexible metal conduit, provided that the angle between the axis of the screw and the axis of the conduit is not more than 60 degrees and is in the direction that will force the conduit into the connector.

Table 3-2
INSIDE DIAMETER OF END STOP OF FLEXIBLE-METAL CONDUIT FITTINGS

Trade size of Conduit, Inches	Inside Diameter, Inches	
	Minimum	Maximum
5/16	0.313	0.266
⅜	0.375	0.319
½	0.625	0.531
¾▲	0.813	0.691
1	1.000	0.850
1¼	1.250	1.063
1½	1.500	1.275
2	2.000	1.700
2½	2.500	2.125
3	3.000	2.550
3½	3.500	2.975
4	4.000	3.400

Table 3-3
OUTSIDE DIAMETER OF FLEXIBLE-METAL CONDUIT FITTING OF THE SCREW-IN TYPE

Trade size of Conduit, Inches	Minimum Diameter of Barrel, Inches
⅜	0.380
½	0.634
¾	0.825

5. A connector for armored cable or flexible metal conduit shall secure the cable or conduit so that it will withstand a steady pull of 150 pounds for 5 minutes, when assembled to flexible steel conduit, and so that the cable or conduit cannot be removed readily by bending or flexing.

a. A multiple connector (such as a *duplex* connector) for armored cable or flexible metal conduit shall be tested with the appropriate cables or conduits properly attached to each opening or section. Each cable or conduit shall be subjected, one at a time, to the 150-pound pull.

b. The wires in armored cable shall project approximately 6 inches inside the box when the assembly is prepared for test. The armored cable, to be used in conducting tests on a connector intended for use with 14 AWG two-wire cable, shall have an outside diameter of 0.440 ± 0.025 inch and the largest size of cable or conduit that the con-

▲ Editorially revised.

Copyright National Electrical Manufacturers Association
Provided by IHS under license with NEMA
No reproduction or networking permitted without license from IHS
Not for Resale

nector will accommodate. Each cable shall be 10 feet long, not including the 6 inches of wire inside the box.

c. Six fittings of each trade size shall be subjected to each test, except that, if a line of at least four trade sizes of fittings of a particular design is being tested, three samples of each trade size shall be tested. Flexible metal conduit fittings shall be assembled to 10-foot lengths of flexible steel conduit of the corresponding trade size in the manner recommended by the manufacturer. If unusual assembly techniques are required, suitable instructions for proper assembly should be provided with the fittings when shipped from the factory. (The preceding sentence is approved as Authorized Engineering Information.) For screw-in fittings, the conduit shall be within 0.003 inch of the maximum inside diameter for the conduit. For outside fittings, the conduit shall be within 0.005 inch of the maximum inside diameter for the conduit.

d. A direct-bearing screw-type or clamp-screw-type fitting shall be assembled and tightened with a torque of 35 pound-inches, except that any fitting using a No. 8 screw shall be tightened with a torque of 20 pound-inches. The fitting shall not crack or break, and the thread of any clamping means shall not strip. The cable or conduit shall not be punctured or deformed so as to cause sharp edges in the wireway.

6. All fittings shall be subjected to an electrical continuity test in accordance with 3.4 par. 6a. In addition, flexible metal conduit fittings of the ⅜-, ½-, and ¾-inch trade sizes, flexible metal conduit fittings of other trade sizes that are marked to indicate that they are of the grounding type, and all armored cable connectors shall be subjected to a vibration test (3.4 par. 6b), followed by an electrical continuity test (repeated) (3.4 par. 6c).

a. The fitting shall be subjected to the electrical continuity test described in 6.9. The voltage drop across the assembly shall not exceed 50 millivolts.

b. The fitting shall be rigidly attached to a vibrating machine. The cable or conduit shall be supported, but not clamped, at points 1 foot and 5½ feet from the fitting. At a point on the conduit or cable 10 feet from the fitting, the conduit or cable shall be secured after being rotated axially 180 degrees in a direction which would permit the conduit or cable to loosen in the fitting. The assembly shall be vibrated for 24 hours through an amplitude of 1/32 inch at 2000 cycles per minute. The vibrating force shall be applied in a direction along the longitudinal axis of the fitting. The test is not passed if either the conduit or cable is damaged by the fitting or if the conduit or cable has loosened or backed away from the end stop of the fitting by more than ¼ inch.

c. Following the tests described in 3.4 pars. 6a and 6b, the fittings shall again be tested in accordance with 3.4 par. 6a.

NEMA Standard 1-11-1983.

The vibration test and repeated electrical continuity test is not required of a fitting which is so constructed that a clamping action provides intimate contact with the intended raceway through all but a small portion of the circumference of the raceway, and which is secured in place by at least one machine screw.

Authorized Engineering Information 1-11-1983.

7. A connector of the ⅜-inch trade size shall be capable of securing a 14-AWG two-wire cable unless it is marked to indicate that it is to be used with a cable of another size. A connector for armored cable that is not suitable for a 14-AWG two-wire cable shall be marked with the size of the smallest cable for which it is suitable.

8. Fittings for flexible metal conduit shall be designed to conduct any anticipated ground fault current likely to be imposed on them.▲

9. Fittings for armored cable shall be designed to conduct any anticipated ground fault current likely to be imposed on them.▲

NEMA Standard 9-20-1984.

3.5. CONNECTORS FOR NONMETALLIC SHEATHED CABLE●

3.5.1

A connector for nonmetallic sheathed cable shall secure the cable so that the cable will withstand a direct pull of 60 pounds for 5 minutes without damage to the insulation, without displacement by more than ⅛ inch, and without loosening to the point where the cable can be readily removed by bending or flexing when the force is removed. The pull shall be applied between the cable and a box in which the connector is mounted in the intended manner.

▲ Revised.
● Added.

Copyright National Electrical Manufacturers Association
Provided by IHS under license with NEMA
No reproduction or networking permitted without license from IHS
Not for Resale

The cut end of the cable sheath shall be in contact with the stop if one is provided; if no stop is provided, the cut end of the sheath shall extend approximately ¼-inch beyond the connectors. The wires of the cable shall be allowed to project approximately 6 inches inside the box. Nonmetallic sheathed cable with a plastic outer jacket shall be used in conducting the secureness test on a connector for use with 14-AWG two-wire cable. The cable shall have a minor axis of 0.210 to 0.285 inch and a major axis of 0.390 to 0.470 inch. A screw that can be tightened with a screwdriver shall be tightened with a torque of 35 pound-inches, except that a No. 8 screw shall be tightened with a torque of 20 pound-inches. See 3.5.2.

3.5.2

A connector of the ⅜-inch trade size shall be capable of securing a 14-AWG two-wire cable unless it is marked to indicate that it is to be used with cable of another size; a connector that is not suitable for a 14-AWG two-wire cable shall be marked with the size of the smallest cable for which it is suitable.

NEMA Standard 9-20-1984.

3.6 FITTINGS FOR METAL-CLAD CABLE

1. Fittings for metal-clad cable shall be provided with a smooth well rounded end stop which will prevent the metal sheath from passing through.

2. Fittings shall be assembled as follows without damaging the fittings, stripping threads, or puncturing the cable armor:

   a. Fittings with a gland shall be tightened with the torque indicated in Table 6-1, except that when assembled with aluminum-sheathed cable the torque shall be 700 pound-inches for all trade sizes over ¾-inch.

   b. Direct-bearing screw-type or clamp-screw-type fittings shall be tightened with a torque of:

      (1) 35 pound-inches for screws that can be tightened with a screwdriver except that a No. 8 screw shall be tightened with a torque of 20 pound-inches, or

      (2) 160 pound-inches for an unslotted bolthead screw.

   c. Fittings provided with specific assembly instructions shall be permitted to be assembled using the torque specified in the instructions.

3. Fittings for metal-clad cable shall be subjected to a continuity test per 3.6 par. 3a, a bending test per 3.6 par. 3b, a repeated continuity test per 3.6 par. 3c, and a pull out test per 3.6 par. 3d, in that order. The same samples shall be used for these tests.

   a. Electrical Continuity Test—Fittings shall be subjected to the electrical continuity test described in 6.9.

      (1) *Method*—Fittings shall be assembled to lengths of cable in the intended manner, using the tightening torques described in 3.6 par. 2. Six inches of lead shall be allowed to project out of the cable, and the cable shall be inserted up to the end stop in the connector. The connector shall then be assembled to a threaded rigid conduit coupling, representing a conduit hub in a box, and the test current of 30 amperes direct current passed through the cable sheath and threaded coupling. The difference in potential between the cable and the threaded coupling, 1/16 inch from the connector, shall be measured.

      (2) *Evaluation*—This test is not passed if the voltage drop, measured between the cable and the coupling, exceeds 50 millivolts.

   b. Bend Test—Following the electrical continuity test described in 3.6 par. 3a, the same assemblies shall be subjected to the following bend test:

      (1) *Method*—The threaded couplings shall be secured in a pipe vise with the axis of the cable in line with the axis of the connector. The cable shall be bent around a wooden form having a radius as specified in Table 3-4. The cable shall be bent in one direction so that a 90-degree bend is formed. The wooden form shall be positioned on the opposite side of the cable. The cable shall then be bent 180 degrees in the opposite direction and then back to its original position in line with the axis of the connector.

      (2) *Evaluation*—This test is not passed if the assembly of cable and connector does not remain intact.

   c. Electrical Continuity Test (Repeated)—Following the tests described in 3.6 pars. 3a and 3b, the same assemblies shall be subjected to the following electrical continuity test:

Copyright National Electrical Manufacturers Association
Provided by IHS under license with NEMA
No reproduction or networking permitted without license from IHS
Not for Resale

Table 3-4
BENDING RADIUS FOR METAL CLAD CABLE

External Diameter of Cable, Inch	Multiplying Factor for Inner Radius of Cable Bend*		
	Cable with Interlocked Type Armor or Corrugated Sheath	Shielded Connectors	Cables with Smooth Sheath
Not more than ¾	7	12	10
More than ¾, but not more than 1½	7	12	12
More than 1½	7	12	15

*The factor is to be multiplied by the external diameter of the cable to get the inner radius of the bend.

(1) *Method*—The tightness of the connectors in the threaded couplings shall be rechecked and brought back to the original tightening torque specified in 3.6 par. 2b, where necessary. However, no adjustment shall be made between the cable and connector. The assembly shall then be subjected to the electrical continuity test described in 3.6 par. 3a.

(2) *Evaluation*—This test is failed if the voltage drop measured between the cable and the coupling exceeds 50 millivolts.

d. Pull-Out Test—Following the tests described in 3.6 pars. 3a, 3b, and 3c, the same assemblies shall be subjected to the following pull-out test:

(1) *Method*—A 150-pound pull shall be applied between the connector and the cable for a period of 5 minutes in a direction that is intended to pull the cable directly out of the connector.

(2) *Evaluation*—This test is failed if the assemblies do not remain intact, if the fitting can be separated from the cable by slightly bending or flexing the cable, or if there is evidence of movement of the cable with relation to the connector during or after the test.

4. Raintight fittings for metal-clad cable with impervious sheath shall meet the requirements given in 6.3, the test being conducted with previously untested samples.

5. Fittings for metal clad cable shall be designed to conduct any anticipated ground fault current likely to be imposed on them.▲

NEMA Standard 9-20-1984.

▲ Revised.

3.7 FITTINGS FOR MINERAL-INSULATED METAL-SHEATHED CABLE

1. A fitting for mineral-insulated metal-sheathed cable shall be provided with means for separation of the cable conductors and, except as noted in 3.7 par. 2, for sealing the end of the cable against the entrance of moisture.

2. Suitable, flexible, insulating tubing having a minimum wall thickness of 0.020 inch shall be provided with each fitting. The inside diameter of the tubing shall be such that the tubing can be slipped easily over the bared conductors of cable of the largest AWG size for which the fitting is intended. At least 6 inches of tubing shall be provided for each cable conductor.

3. If insulating materials of different compositions are used with the same fitting, the material shall be compatible. See 3.7 par. 11.

4. Fittings for mineral-insulated metal-sheathed cable shall be subjected to the tests described in 3.7 pars. 5 through 13. Except as noted in 3.7 pars. 6a(1) and 6a(2), a minimum of six samples of each design shall be tested. The test sequence shall be the electrical continuity test described in 6.9 and 3.7 par. 6, followed by the bend test (3.7 par. 7) and pull tests (3.7 par. 8). The same samples shall be used for the three tests without conditioning between tests. In view of the range of conductor sizes available in mineral-insulated metal-sheathed cable and the variations in the number of conductors per cable size, it is not practical to test each fitting for every variation. (The preceding sentence is approved as Authorized Engineering Information.)

5. Fittings equipped with a gland nut shall be tightened with the torque indicated in Table 6-1 for threadless fittings corresponding to the trade size of the knockout into which the fitting is to be inserted. A fitting provided with a setscrew shall be tightened with a torque of 35 pound-inches, except that a No. 8 screw shall be tightened with a torque of 20 pound-inches. Bolt-head screws (unslotted, direct-bearing, or securing a clamp) shall be wrench tightened with a torque of 150 pound-inches.

Copyright National Electrical Manufacturers Association
Provided by IHS under license with NEMA
No reproduction or networking permitted without license from IHS
Not for Resale

The manufacturer's installation instructions should be followed in assembling fittings for the tests. (The preceding sentence is approved as Authorized Engineering Information.)

6. The fittings shall meet the requirements of the electrical continuity test described in 6.9.

a. When tested as follows, the insulation resistance of a two-conductor 14-AWG or smaller cable shall not be decreased appreciably as a result of the installation of a fitting provided with means for sealing the cable end and shall be at least 1,000,000 ohms after 3 hours of immersion and at least 250,000 ohms after 30 days of immersion.

(1) Two 11-foot lengths of cable shall be stripped of the outer sheath and mineral fill for 6 inches at each end, and a fitting with insulating sleeving shall be installed at one end of each cable.

(2) If the cable is coiled for this test, the inside diameter of the coil shall be not less than ten times the outside diameter of the cable.

(3) The cable with its fitting shall then be immersed under ordinary tap water, at room temperature, with the bared ends of the end without the fitting above the water. The end of the cable without the fitting shall be sealed to prevent the mineral insulation from absorbing moisture from the air.

(4) The insulation resistance between conductors and between the conductors and the outer cable sheath shall be measured before the cable fitting has been installed; after the fitting has been installed but before the assembly has been immersed in water; after the assembly has been immersed in water for 3 hours; and after the assembly has been immersed in water for 30 days.

b. When tested as follows, the insulation resistance of a two-conductor 14-AWG or smaller cable and fittings, provided with a means for sealing the end of the cable, shall be at least 250,000 ohms after 14 days of immersion in water at a temperature of 50°C.

(1) Two 6-foot lengths of the cable shall be used.

(2) The outer sheath and mineral fill shall be stripped from approximately 30 inches at each end and a fitting installed at each end of the remaining 1-foot center section. The bared conductor shall be insulated with approximately 30 inches of the flexible tubing supplied with the fitting.

(3) The entire assembly, except for the bared ends of the conductors at the end of the flexible tubing, shall be immersed under a 1-foot head of ordinary tap water maintained at 50°C.

c. The cable and fitting assemblies used in the insulation resistance tests, described in 3.7 pars. 6a and 6b, shall withstand a potential of 1500 volts alternating current for 1 minute. The test shall be conducted on the samples immediately following the insulation resistance tests described in 3.7 pars. 6a and 6b. The potential shall be applied first between conductors, and then between all conductors connected together and the outer cable sheath. Samples shall be removed from the water for this test and wiped dry on the outside. The potential shall be increased gradually from 0 to 1500 volts.

7. The assembly of the fitting and cable shall not loosen when the cable is bent as follows:

a. The fitting shall be connected to a solidly mounted box or equivalent connection point with the axis of the cable in line with the axis of the fitting.

b. The cable shall be bent around a wooden form having a radius equal to five times the diameter of the cable.

c. The cable shall be grasped at a point 2 feet from the fitting and bent in one direction so that a 90-degree bend is formed. The cable shall then be bent 180 degrees in the opposite direction, and then back to its original position in line with the axis of the fitting.

8. The assembly of the fitting and cable shall remain intact when subjected to a direct pull of 150 pounds for 5 minutes between the cable and the fitting.

9. If a fitting does not have a means for sealing the end of the cable as a part of the fitting, it shall be designed for use with a separate sealing fitting. When properly assembled to mineral-insulated metal-sheathed cable, the fitting shall not permit the entrance of water as a result of the test described in 6.3. Previously untested samples shall be used for this test. The samples shall be tested with the assembly in any position which is likely to be encountered in service. (See 3.7 par. 10.)

Copyright National Electrical Manufacturers Association
Provided by IHS under license with NEMA
No reproduction or networking permitted without license from IHS
Not for Resale

10. A fitting intended for use only in Type 1 locations (dry locations) shall be clearly marked *Dry Locations Use*, or the equivalent. The marking shall be an integral part of the fitting and shall be embossed or die-stamped on the outer surface of the fitting in a location where it will be visible after installation. Such fittings need not comply with the requirements of 3.7 par. 9. (The preceding sentence is approved as Authorized Engineering Information.)

11. The parts provided for sealing the end of the cable and for insulating the cable conductors shall show no undue deterioration and shall not adversely affect each other after exposure to air at a temperature of 92°C for 60 days.

12. The complete assembly, including any sealing compound and insulating tubing, shall be placed in a circulating air oven and maintained at 92°C ± 1°C for 60 days.

13. Internal rubber or rubber-like parts of a fitting shall be tested in accordance with 6.10.

14. Fittings for mineral-insulated metal-sheathed cable shall be designed to conduct any anticipated ground fault currently likely to be imposed on them.▲

NEMA Standard 9-20-1984.

3.8 FITTINGS FOR SERVICE ENTRANCE CABLE

1. A connector shall secure the cable so that it will withstand a steady pull of 50 pounds for 5 minutes and so that the cable cannot be readily removed by bending or flexing. The conductors shall project approximately 6 inches into the connector being tested. A screw that can be tightened with a screwdriver shall be tightened with a torque of 35 pound-inches; except that a No. 8 screw shall be tightened with a torque of 20 pound-inches unless a different torque is specified by the manufacturer. A gland nut shall be tightened with the torque given in Table 6-1 for threadless fittings corresponding to the trade size of the threaded portion of the connector. The assembly shall be mounted in a box in the intended manner. The pull shall be applied between the cable and the box.

2. Raintight connectors shall meet the requirements given in 6.3.

3. Elastomeric components of a connector shall meet the requirements of 6.10.

4. Thermoplastic components of a connector shall meet the requirements of 6.11 par. 1.

NEMA Standard 1-11-1983.

3.9 SILL PLATE

A sill plate shall meet the requirements specified in 2.2 and 2.3, as applicable. A sill plate shall be provided with a means for drainage.

NEMA Standard 1-11-1983.

Sealing compound should be used to prevent the entry of water into the building.

Authorized Engineering Information 1-11-1983.

3.10 FITTINGS FOR LIQUID-TIGHT FLEXIBLE METAL CONDUIT

1. Fittings for liquid-tight flexible metal conduit shall be provided with a smooth well rounded end stop which will completely encircle the end of the conduit.

   a. The smooth end stop shall be provided by the body of the fitting or by a separate part applied over the cut end of the conduit.
   b. Any part of the fitting inserted into the conduit to assist in providing a smooth throat, a bond between fitting and conduit, or assembly to the conduit shall not reduce the diameter of the usable inside cross section of the conduit by more than 15 percent.
   c. If a fitting employs a set screw, or the equivalent, to secure the fitting to the conduit, the inside diameter of the conduit shall not be reduced more than 15 percent when the fitting is assembled to the conduit in accordance with 3.10 par. 5a.

2. The assembly of a fitting to the conduit shall meet the rain test requirements of 6.3. Previously untested samples shall be used with the assembly in any position likely to be encountered in service. Only one such test shall be conducted on any one sample.

3. The assembly of the fitting and conduit shall be subjected to a direct pull of 150 pounds for 5 minutes and shall remain intact. (See 3.10 par. 4b.)

4. If a fitting utilizes a flexible sleeve or ring to comply with 3.10 par. 2, the material shall meet the following requirements:

   a. If the sleeve or ring is of an elastomeric material, the material shall meet the requirements of 6.10 par. 1.
   b. If the sleeve or ring is of a thermoplastic material, an assembly made in accordance with 3.10 par. 5a shall be aged for 7 days in a circulating air oven at 100°C. The assembly shall be subjected to a direct pull of 150 pounds for 5 minutes and shall remain intact. This test permits the use of the same samples used for the test described in 3.10 par. 2.

▲ Revised.

Copyright National Electrical Manufacturers Association
Provided by IHS under license with NEMA
No reproduction or networking permitted without license from IHS
Not for Resale

c. If the sleeve or ring fits over the outside of the conduit jacket and is exposed after it is installed on the conduit, the tensile strength of the material used for the sleeve shall not decrease more than 25 percent and the elongation shall not decrease more than 35 percent as a result of the test described in 6.10 par. 1.

d. The sleeve or ring shall be exposed to mineral oil for 18 hours at 70°C ± 1°C. The tensile strength and elongation shall not decrease more than 40 percent.

5. Fittings for conduit in the ⅜-, ½-, ¾-, 1-, and 1¼-inch trade sizes and fittings for grounding-type conduit in the 1½-, 2-, 2½-, 3-, 3½-, 4-, 5-, and 6-inch trade sizes shall be subjected to all of the following tests. Fittings in the 1½-, 2-, 2½-, 3-, 3½-, 4-, 5-, and 6-inch trade sizes intended for use with other than grounding-type conduit shall be subjected to the tests described in 3.10 pars. 5a through 5d.

a. Assembly—In assembling the fittings for tests, a fitting with a gland nut shall be tightened with the torque given in Table 6-1 for threadless fittings, except that the tightening torque for a ⅜-inch trade size fitting shall be 235 pound-inches. A fitting that can be tightened with a screwdriver shall be tightened with a torque of 35 pound-inches, except that a No. 8 screw shall be tightened with a torque of 20 pound-inches. A bolthead screw (unslotted, direct bearing, or securing a clamp) shall be wrench tightened with a torque of 160 pound-inches.

All samples shall be assembled to liquid-tight flexible metal conduit, of the intended trade size, in the manner recommended by the manufacturer. For those samples to be tested in accordance with 3.10 par. 5c, the conduit shall be 10 feet in length. If unusual assembly techniques are required, suitable instructions for proper assembly should be provided with the fittings when shipped from the factory. (The preceding sentence is approved as Authorized Engineering Information.)

b. Electrical Continuity—A current of 30 amperes direct current, in accordance with 6.9, flowing through the connection between a fitting and two lengths of conduit or conduit and a box, shall not result in a voltage drop of more than 50 millivolts. The voltage drop shall be measured between two points in accordance with 6.9. Also see 3.10 par. 5c.

c. Vibration—A fitting, when tested as follows, shall not permit the conduit to loosen or back out of a sleeve by more than ¼ inch.

The fitting shall be rigidly attached to a vibrating machine, and the end of the raceway opposite the fitting shall be placed in a horizontal plane with the fitting and rotated axially for 180 degrees in a direction which might permit the conduit to loosen in the fitting or sleeve. The fitting shall be vibrated for 24 hours through an amplitude of 1/32 inch at 2000 cycles per minute. The vibrating force shall be applied in a direction along the longitudinal axis of the fitting.

d. Repeated Electrical Continuity—Following the vibration test, fittings shall comply with the requirements of 3.10 par. 5b.

e. Fittings for liquid-tight flexible metal conduit shall be designed to conduct any anticipated ground fault current likely to be imposed on them.▲

6. A fitting for 1½-, 2-, 2½-, 3-, 3½-, 4-, 5-, and 6-inch trade sizes of liquid-tight flexible metal conduit of the grounding type shall be marked to indicate that they are of the grounding type, and the carton or other container in which the fitting is packaged shall be marked to indicate that they are grounding-type fittings.

NEMA Standard 9-20-1984.

3.11 SERVICE ENTRANCE HEADS (CAPS, HOODS) AND ELBOWS (ELLS)

1. A service-entrance head for use on either rigid metal conduit, intermediate metal conduit, or electrical metallic tubing shall meet the requirements of 6.3 and shall have an integral end stop for the conduit or tubing to provide a smooth well rounded opening. Except as noted in 3.11 par. 2, the opening shall have an internal diameter equivalent to that provided by the throat of a conduit bushing as indicated in Table 2-6.

NEMA Standard 1-11-1983.

2. A service-entrance head for use on oversize conduit (conduit of a size larger than that corresponding in size to the other parts of the head) may have an end stop with an internal diameter of the maximum size indicated in Table 2-6 for the size of conduit on which it is intended to be installed. No minimum internal diameter of the end stop is specified for such a head.

Authorized Engineering Information 1-11-1983.

3. If a service-entrance head intended for use on rigid metal conduit, intermediate metal conduit, or electrical metallic tubing, is provided with a removable part which is intended to be discarded when the head is assembled to rigid conduit, the removable part shall be

▲ Revised.

Copyright National Electrical Manufacturers Association
Provided by IHS under license with NEMA
No reproduction or networking permitted without license from IHS
Not for Resale

so secured that it will not inadvertently separate from the head during handling or shipment.

4. A service-entrance head intended for use on rigid metal conduit, intermediate metal conduit, or electrical metallic tubing shall be installed as intended on both raceways to determine that the end stop will be effective as a bushing for the conductors. The edge of the stop shall extend at least to the inside edge of either raceway around the entire circumference.

5. A service-entrance head shall have not more than three open holes of which not more than one is uninsulated.

6. A service-entrance head or hood for service-entrance cable shall protect the open end of the jacket or braid of the cable from the entrance of rain and shall have suitable means for mounting and clamping the cable.

7. A metallic service entrance head or hood shall meet the electrical continuity test described in 6.9.

Except as noted herein, the fitting shall be assembled to the conduit or tubing as intended, applying the tightening torque for threadless fittings given in Table 6-1. A fitting that can be tightened with a screwdriver shall be tightened with a torque of 35 pound-inches, except that a No. 8 screw shall be tightened with a torque of 20 pound-inches. A bolt-head screw (unslotted, direct-bearing, or securing a clamp) shall be wrench tightened with a torque of 160 pound-inches.

NEMA Standard 1-11-1983.

3.12 CAST METAL BOXES AND CONDUIT BODIES●

3.12.1 General Requirements

3.12.1.1 Cast metal boxes and conduit bodies for use with raceway systems or with cable assemblies, or with both, to distribute power in an electrical system shall provide one or more of the following:

1. Means of connecting or terminating conduits or cable assemblies, or both.
2. Physical protection to the conductors during and after the installation.
3. Electrical continuity and the capacity to conduct safely any fault current likely to be imposed on them in accordance with Article 250 of the *National Electrical Code*.
4. Protection to personnel from coming into contact with energized conductors which are part of a raceway system or cable assembly, or both.
5. Containment of a fault and the effects of a fault within a metallic raceway system, thereby aiding in the prevention of fire from arcing faults.
6. Protection against the particular environment.
7. Means for mounting wiring devices or other electrical equipment.

● Added.

3.12.2 Metallic Materials

3.12.2.1 Wall Thickness

Boxes and conduit bodies shall have a wall thickness not less than ⅛ inch, except that the wall of a malleable-iron or a die-cast or permanent-mold-cast box or conduit body shall be not less than 3/32 inch thick, or 1/16 inch thick for those areas of pull or junction boxes not exceeding 24 square inches or 6 inches in any dimension.

3.12.2.2 Rust and Corrosion Resistance

Boxes and conduit bodies and all attached metal parts, including fasteners and covers, shall meet the requirements of 2.2.4 or 2.2.5.1, unless the metal is resistant to corrosion.

3.12.2.3 Coatings on Metallic Surfaces

Coatings on metallic surfaces, if applied, shall comply with 2.2.2.

3.12.3. NONMETALLIC COMPONENTS

(To be developed.)

3.12.4 CONNECTIONS FOR WIRING SYSTEMS

3.12.4.1 Wall Thickness at Tapped Holes for Connection to Conduit

1. Outlet and Devices Boxes—Wall thickness in the area intended for field drilling and tapping shall be not less than 17/64 inch.

2. Junction and Pull Boxes—Wall thickness in an area where tapped holes are provided or intended for field tapping shall comply with Table 3-5, except that the maximum thickness specified shall be permitted to be exceeded if holes for smaller size conduit are counterbored and tapped, provided that the tapped portion complies with the table for the conduit size involved.

Table 3-5
WALL THICKNESS AT TAPPED HOLES FOR CONDUIT

Trade Size of Conduit, Inches	Thickness of Metal, Inches	
	Minimum	Maximum
½ - ¾	7/32	½
1 - 2	17/64	45/64
2½ - 6	⅜	1⅛

3.12.4.2 Threads and Bushings

A threaded hole for connection of conduit that is tapped completely through a wall of a box shall have at least 3 and no more than 5 threads. The construction shall permit the proper attachment of a conduit bushing.

If the threads are not tapped completely through the wall or conduit hub, there shall be not less than 5 full

Copyright National Electrical Manufacturers Association
Provided by IHS under license with NEMA
No reproduction or networking permitted without license from IHS
Not for Resale

threads. The inlet hole shall have smooth, round edges and internal diameter approximately the same as that of the corresponding trade size of rigid conduit and shall afford conductor protection equivalent to that provided by a conduit bushing.

3.12.4.3 Thread Dimensions

Factory-threaded entries for connection to wiring systems shall comply with Figures 4-1, 4-2, 4-3, 4-4, and 4-10, as applicable, when cut threads are used. Standard NPT taps and chasers are recommended for field tapping. (The preceding sentence is approved as Authorized Engineering Information.)

3.12.4.4 Grounding

A box or conduit body designed for use with nonmetallic raceway or cable shall have provision for the termination of a grounding conductor.

NEMA Standard 9-20-1984.

3.12.5 TYPE DESIGNATIONS

Certain products covered by 3.12 and 3.13 may also have NEMA Type Designations in accordance with NEMA Standards Publication No. 250, *Enclosures for Electrical Equipment (1000 Volts Maximum).*

Authorized Engineering Information 9-20-1984.

3.13 SPECIFIC REQUIREMENTS FOR CAST METAL BOXES AND CONDUIT BODIES•

3.13.1 Types

All cast metal boxes and conduit bodies shall meet the applicable general requirements given in 3.12 and shall meet the specific detailed requirements applicable to the types listed below:

1. Device boxes (FS and FD boxes) and covers—3.13.2.
2. Outlet boxes and covers—3.13.3.
3. Junction and pull boxes—3.13.4.
4. Conduit bodies—3.13.5.

3.13.2 Device Boxes (FS and FD Boxes) and Covers

3.13.2.1 Box Dimensions

1. The configuration of single-gang FS and FD box faces shall conform to Figure 3-2.
2. The configuration of individual box faces on multigang FS and FD boxes which use single-gang covers shall conform to Figure 3-2.
3. The internal depth shall be not less than 1¾ inches for FS boxes and not less than 2⅜ inches for FD boxes.

3.13.2.2 Cover Requirements

1. Blank covers and covers that support wiring devices shall meet the requirements of 3.13.3.2.
2. Covers which are supported by wiring devices shall comply with the following: A metallic cover shall be (1) steel not less than 0.030 inch (0.76mm) thick, or (2) copper alloy, aluminum, or zinc not less than 0.040 inch (1.02 mm) thick, or (3) other acceptable material.
3. Except as indicated in paragraphs a, b, and c below, and FS and FD box cover shall have no open holes.
   a. No more than four openings per gang shall be provided for mounting a cover to a box.
   b. A hole in an FS and FD box cover designed to permit the passage of a flexible cord shall have a smooth rounded surface or shall be provided with an insulated bushing.
   c. Openings for devices.

NEMA Standard 9-20-1984.

3.13.3 Outlet Boxes and Covers

3.13.3.1 Boxes

General requirements for outlet boxes are covered under 3.12.

Authorized Engineering Information 9-20-1984.

3.13.3.2 Cover Requirements

1. Except as indicated in par. 2 below, cast metal covers shall be constructed in the same thicknesses as those specified for boxes and conduit bodies in 3.12.2.1.
2. The thickness of cast metal covers, other than malleable iron or die-cast or permanent mold cast metal, shall be permitted to be less than that required by par. 1 above, but not less than 3/32 inch if the cover is lined with firmly attached insulating material not less than 1/32 inch thick.
3. A sheet steel cover shall be made from material at least 0.0625 inch thick.
4. A cover of sheet aluminum alloy having a tensile strength not less than 17,000 psi shall be not less than 0.091 inch thick.
5. Except as indicated in paras. a, b, c below, and outlet box cover shall have no open holes.
   a. No more than four openings shall be provided for mounting a cover to a box.
   b. A hole in an outlet box cover designed to permit the passage of a flexible cord shall have a smooth, rounded surface or shall be provided with an insulating bushing.
   c. Openings for devices.
6. An outlet box cover provided with a tapped hole for connection to a wiring system shall conform to 3.12.4.

• Added.

Copyright National Electrical Manufacturers Association
Provided by IHS under license with NEMA
No reproduction or networking permitted without license from IHS
Not for Resale

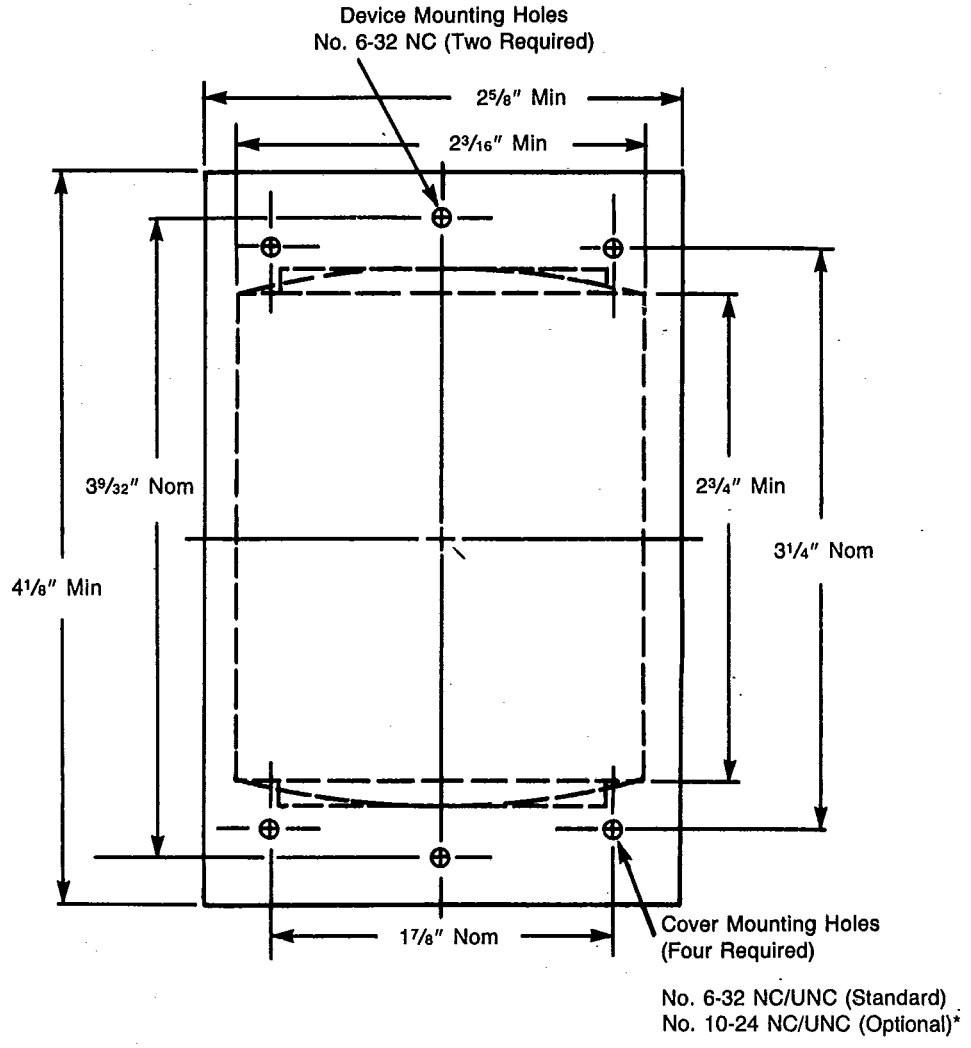

*Options approved as Authorized Engineering Information.

Figure 3-2
CONFIGURATION FOR SINGLE-GANG FS AND FD BOX FACE

3.13.4 Junction and Pull Boxes and Covers

3.13.4.1 Box Dimensions

A junction or pull box having provision for connection of conduit or tubing ¾-inch size or larger shall comply with either 1 or 2 below:

1. The distance between opposite walls, each containing a raceway entry, shall be not less than eight times the trade diameter of the largest raceway entry in such walls.

The distance between each raceway entry and the opposite wall of the box shall be at least six times the diameter of the largest raceway that may be connected to it plus the sum of the trade diameters of all other entries in the same wall, except that where a raceway entry is in a wall opposite a removable cover, the distance from the wall to the cover shall be permitted to be at least that specified in Table 3-6.

Table 3-6
Distance From Removable Cover To Opposite Wall With Raceway Opening

Trade Diameter of Raceway Entry, Inches	Minimum Distance—Wall To Cover, Inches
¾	2
1	2½
1¼	3½
1½	4
2	5
2½	6
3	8
3½	10
4	10
5	12
6	12

2. A box having dimensions less than those required in par. 1 above shall be marked with the following: "Caution: When used as a pull box, installation shall be

Copyright National Electrical Manufacturers Association
Provided by IHS under license with NEMA
No reproduction or networking permitted without license from IHS
Not for Resale

in accordance with Section 370-18 of the *National Electrical Code*."

3.13.4.2 Cover Requirements

Cast metal covers shall be constructed in the same thicknesses as specified in 3.12.2.1 for the walls of boxes of the same material.

3.13.5 Conduit Bodies

3.13.5.1 Provision for Mounting Devices

1. A conduit body having a volume exceeding 100 cubic inches shall have no provision for mounting switches, fuseholders, or other control devices.

2. A conduit body having a volume of 100 cubic inches or less shall be permitted to have provision for mounting a wiring device if it meets one of the following conditions:

   a. The conduit body has three or more conduit entries.
   b. The conduit body has less than three conduit entries and is identified with its volume in cubic inches.

3.13.5.2 Cross-Sectional Area

A conduit body shall have a cross-sectional area not less than twice the cross-sectional area of the largest tubing or conduit that may be attached to it, unless it is marked for use only with No. 6 AWG or smaller conductors.

3.13.5.3 Dimensions

Unless marked for use only with No. 6 AWG or smaller conductors, a conduit body having provison for connection of conduit or tubing ¾-inch trade size or larger shall comply with the requirements of either par. 1, 2, or 3 below:

1. A conduit body that does not change the direction of wiring passing through it shall have a length at least eight times the trade diameter of the largest raceway that may be connected to it.

A conduit body that permits a change in the direction of wiring passing through it shall have a distance between each raceway entry and the opposite wall of the body at least six times the trade diameter of the largest raceway that may be connected to it plus the sum of the trade diameters of all other entries in the same wall, except that where a raceway entry is in a wall opposite a removable cover, the distance from that wall to the cover shall be permitted to be no less than that specified in Table 3-6.

In all cases, the distance between raceway entries designed to enclose a common conductor shall be not less than six times the trade diameter of the largest raceway.

2. A conduit body having dimensions less than those required in par. 1 above, but which complies with the minimum dimensions in Table 3-7, shall be permitted for use with conductors of the size indicated in Table 3-7 or a combination of smaller conductors not exceeding the equivalent fill.

3. A conduit body having dimensions less than those required in pars. 1 or 2 above shall be permanently marked with the maximum number and maximum size of the conductors for which it is designed.

3.13.5.4 Covers

Thickness of covers shall conform to the minimum wall thickness in Table 2-1.

NEMA Standard 9-20-1984.

Table 3-7
Minimum Distance Between Conduit Entries in Conduit Bodies For Three- and Four-Conductor Installations

Trade Size, Inches	Angle Pull, Entry Opposite Removable Cover (LB)			Straight Pull (C)			Angle Pull (T, LL, LR, X)		
	Minimum Distance, Inches	Maximum Size 3	Maximum Wire 4	Minimum Distance, Inches	Maximum Size 3	Maximum Wire 4	Minimum Distance, Inches	Maximum Size 3	Maximum Wire 4
¾	3⅜	*	**	4	*	**	2⅛	**	**
1	3¾	4	**	4½	4	**	2¼	4	**
1¼	4¼	3	4	5	3	4	2¾	3	4
1½									
2	4¾	1	2	5½	2	4	2¾	2	4
2½	5	1/0	2	6¼	1/0	2	2¾	2	4
3	7	3/0	1/0	7¾	2/0	1	4½	1/0	2
	7	3/0	1/0	7¾	2/0				
3½	12 7/16	500	350	14⅞	350	250	5½	3/0	1/0
4	12 7/16	500	350	14⅞	350				
5	15	600	400	. . .	. . .	. . .	. . .	. . .	. . .
6	19	750	500	. . .	. . .	. . .	. . .	. . .	. . .

*Two No. 4 conductors shall be permitted.
**Maximum number of No. 6 or smaller conductors as permitted by the *National Electrical Code*.

Copyright National Electrical Manufacturers Association
Provided by IHS under license with NEMA
No reproduction or networking permitted without license from IHS
Not for Resale

Section 4
MANUFACTURING STANDARDS

4.1 THREADS FOR FITTINGS FOR CONDUIT AND CABLE ASSEMBLIES▲

When cut threads are used on conduit, conduit fittings, or apparatus, they shall be in accordance with Figures 4-1 through 4-4, and 4-6 through 4-10, as applicable.*

NEMA Standard 9-20-1984.

*These figures are not intended to apply to products which are manufactured and furnished as a complete fitting or do not require thread interchangeability with conduit or other conduit fittings or locknuts, or both.

Authorized Engineering Informaiton 9-20-1984.

▲ Revised.

Copyright National Electrical Manufacturers Association
Provided by IHS under license with NEMA
No reproduction or networking permitted without license from IHS
Not for Resale

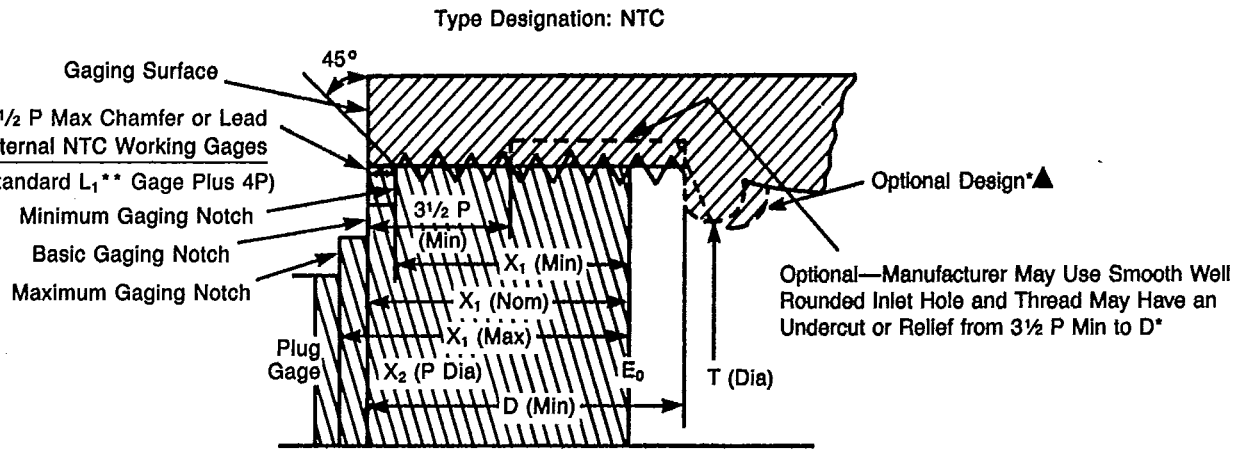

* Options are approved as A.E.I.
** L_1 Handtight Engagement of N.P.T. Standard (ANSI/ASME B1.20.1).●

Figure 4-1

BASIC DIMENSIONS OF INTERNAL TAPERED THREADS FOR CONDUIT FITTINGS FOR USE WITH THREADED RIGID METAL CONDUIT, THREADED INTERMEDIATE METAL CONDUIT, OR OTHER ELECTRICAL FITTING HAVING TAPERED OR STRAIGHT EXTERNAL THREADS (CUT THREADS—FOR ORDINARY LOCATION APPLICATIONS ONLY)▲

Trade Size of Conduit, Inches	Threads Per Inch n	Pitch of Thread P	Pitch Diameter E_o	Handtight Engagement: Length X_1 (Nominal) Inch	Thread	X_2 (Dia)	Handtight Engagement: Penetration Depth of Special N.P.T. Working Plug Gage† Number of Threads Minimum	Maximum	Minimum Depth D	Throat Diameter T Minimum	Maximum
½	14	0.07143	0.7584	0.606	8.48	0.7962	7½	9½	0.712	0.560	0.622
¾	14	0.07143	0.9677	0.626	8.75	1.0066	7¾	9¾	0.731	0.742	0.824
1	11½	0.08696	1.2136	0.748	8.60	1.2602	7¾	9¾	0.878	0.944	1.049
1¼	11½	0.08696	1.5571	0.768	8.83	1.6050	8	10	0.898	1.242	1.380
1½	11½	0.08696	1.7961	0.768	8.83	1.8439	8	10	0.898	1.449	1.610
2	11½	0.08696	2.2690	0.783	9.01	2.3179	8	10	0.914	1.860	2.067
2½	8	0.125	2.7195	1.183	9.46	2.7934	8½	10½	1.307	2.202	2.469
3	8	0.125	3.3406	1.266	10.13	3.4197	9¼	11¼	1.391	2.761	3.068
3½	8	0.125	3.8375	1.321	10.57	3.9200	9½	11½	1.446	3.193	3.548
4	8	0.125	4.3344	1.344	10.75	4.4183	9¾	11¾	1.469	3.623	4.026
5	8	0.125	5.3907	1.438	11.50	5.4805	10½	12½	1.562	4.542	5.047
6	8	0.125	6.4461	1.458	11.66	6.5372	10¾	12¾	1.583	5.458	6.065

† Does not apply to short threaded conduit fittings, such as insulating bushings, or to conduit entrances without integral bushings in a cast box wall.
NEMA Standard 9-20-1984.

1. All dimensions apply to finished products. Unless otherwise indicated, all dimensions are in inches.
2. For suggested thread form see Fig. 4-10.
3. These threads are applicable to those threads to be used with conduit, other conduit fittings, or apparatus. Those products which are manufactured and furnished as a complete fitting and/or do not require thread interchangeability with conduit or other conduit fittings or locknuts, need not comply.
4. In lieu of chamfer a countersink or recess may be used. The chamfer illustrated is at a 45° angle. This detail is not a requirement and is given for information only.
5. It should be recognized that, with the gaging shown, a pressure-tight seal may not always be obtained with a mating standard NPT external thread since it is possible that the external thread may bottom out on the shoulder of the throat or on the imperfect thread of the external threads.
6. Deduct a maximum of one thread length if gaging method involves counting the number of threads that the gage turns out of the fitting.
7. Gaging dimensions (length and number of threads, pitch diameter or depth of recess) is based on a chamfer length of lP beyond the length of the thread. If the chamfer length differs from this, these dimensions should be adjusted proportionately.

Authorized Engineering Information 1-11-1983.

▲ Revised.
● Added.

Copyright National Electrical Manufacturers Association
Provided by IHS under license with NEMA
No reproduction or networking permitted without license from IHS
Not for Resale

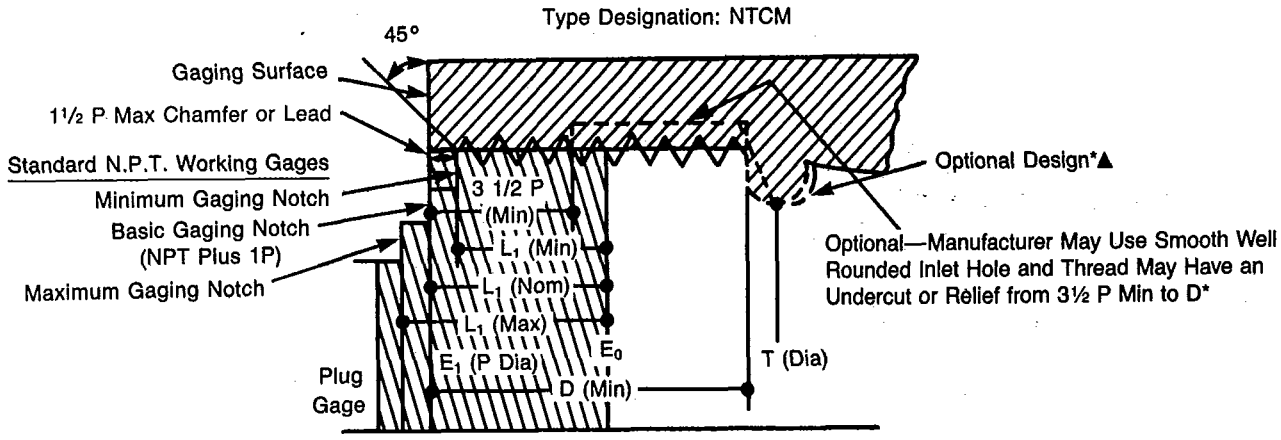

* Options are approved as Authorized Engineering Information.

Figure 4-2

BASIC DIMENSIONS OF INTERNAL TAPERED THREADS FOR CONDUIT FITTINGS FOR USE WITH THREADED RIGID METAL CONDUIT, THREADED INTERMEDIATE METAL CONDUIT, OR ELECTRICAL FITTING HAVING TAPERED EXTERNAL THREADS IN APPLICATIONS† WHERE MAXIMUM THREAD FLANK ENGAGEMENT IS DESIRED (CUT THREADS—FOR ORDINARY LOCATION APPLICATIONS ONLY)▲

Trade Size of Conduit, Inches	Threads Per Inch n	Pitch of Thread P	Pitch Diameter E_o	Handtight Engagement: Length X_1 (Nominal) Inch	Thread	X_2 (Dia)	Handtight Engagement: Penetration Depth of Special N.P.T. Working Plug Gage, Number of Threads Minimum	Maximum	Minimum Depth D	Throat Diameter T Minimum	Maximum
⅜	18	0.05556	0.61201	0.296	5.32	0.6305	4¼	6¼	0.546	0.444	0.493
½	14	0.07143	0.7584	0.391	5.48	0.7829	4½	6½	0.712	0.560	0.622
¾	14	0.07143	0.9677	0.410	5.75	0.9933	4¾	6¾	0.731	0.742	0.824
1	11½	0.08696	1.2136	0.487	5.60	1.2440	4¾	6¾	0.878	1.944	1.049
1¼	11½	0.08696	1.5571	0.507	5.83	1.5888	5	7	0.898	1.242	1.380
1½	11½	0.08696	1.7961	0.507	5.83	1.8277	5	7	0.898	1.449	1.610
2	11½	0.08696	2.2690	0.523	6.01	2.3017	5	7	0.914	1.860	2.067
2½	8	0.125	2.7195	0.807	6.46	2.7700	5½	7½	1.307	2.222	2.469
3	8	0.125	3.3406	0.891	7.13	3.3963	6¼	8¼	1.391	2.761	3.068
3½	8	0.125	3.8375	0.946	7.57	3.8966	6¾	8¾	1.446	3.193	4.548
4	8	0.125	4.3344	0.969	7.75	4.3949	6¾	8¾	1.469	3.623	4.026
5	8	0.125	5.3907	1.062	8.50	5.4571	7½	9½	1.562	4.542	5.047
6	8	0.125	6.4461	1.083	8.66	6.5138	7¾	9¾	1.583	5.458	6.065

†For use in pressure tight applications which require maximum thread flank engagement without bottoming out on stop or on imperfect threads.
NEMA Standard 9-20-1984.

1. All dimensions are after plating. Unless otherwise indicated all dimensions are in inches.▲
2. For suggested thread form see Figure 4-10.
3. These threads are applicable to those threads to be used with conduit, other conduit fittings or apparatus. Those products which are manufactured and furnished as a complete fitting and/or do not require thread interchangeability with conduit or other conduit fittings or locknuts need not comply.
4. In lieu of chamfer a countersink or recess may be used. The chamfer illustrated is at a 45° angle. This detail is not a requirement and is given for information only.
5. Deduct a maximum of one thread length if gaging method involves counting the number of threads that the gage turns out of the fitting.
6. Gaging dimensions (length and number of threads, pitch diameter or depth of recess) is based on a chamfer length of lP beyond the length of the thread. If the chamfer length differs from this, these dimensions should be adjusted proportionately.

Authorized Engineering Information 9-20-1984.

▲ Revised.

Copyright National Electrical Manufacturers Association
Provided by IHS under license with NEMA
No reproduction or networking permitted without license from IHS
Not for Resale

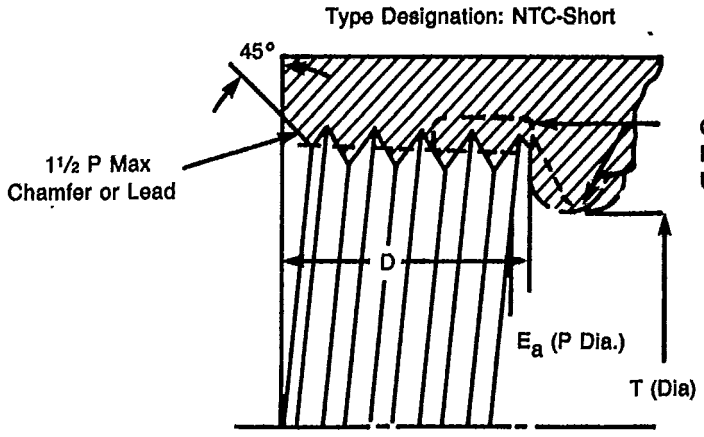

* Option is approved as Authorized Engineering Information.

Figure 4-3

BASIC DIMENSIONS OF INTERNAL TAPERED THREADS FOR CONDUIT FITTINGS HAVING SHORT THREADS FOR USE WITH THREADED RIGID METAL CONDUIT, THREADED INTERMEDIATE METAL CONDUIT, OR OTHER ELECTRICAL FITTINGS HAVING TAPERED OR STRAIGHT EXTERNAL THREADS (CUT THREADS—FOR ORDINARY LOCATION APPLICATIONS ONLY)▲

Trade Size of Conduit, Inches	Threads Per Inch n	Pitch of Thread P	Pitch Diameter E_s		Throat Diameter T		Minimum Depth D†
			Minimum	Maximum	Minimum	Maximum	
½	14	0.07143	0.781	0.788	0.560	0.622	0.275
¾	14	0.07143	0.992	0.999	0.742	0.824	0.275
1	11½	0.08695	1.244	1.252	0.944	1.049	0.406
1¼	11½	0.08695	1.588	1.596	1.242	1.380	0.406
1½	11½	0.08695	1.827	1.835	1.449	1.610	0.406
2	11½	0.08695	2.301	2.309	1.860	2.067	0.469
2½	8	0.125	2.769	2.781	2.222	2.469	0.510
3	8	0.125	3.396	3.408	2.761	3.068	0.515
3½	8	0.125	3.896	3.908	3.193	3.548	0.515
4	8	0.125	4.394	4.406	3.623	4.026	0.535
5	8	0.125	5.456	5.468	4.542	5.047	0.680
6	8	0.125	6.513	6.525	5.458	6.065	0.680

†Minimum depth that a NPSM plug gage with minimum pitch diameter must enter.

NEMA Standard 9-20-1984.

1. All dimensions are after plating. Unless otherwise indicated, all dimensions are in inches.
2. For suggested thread form see Figure 4-10.
3. These threads are applicable to those threads to be used with conduit, other conduit fittings or apparatus. Those products which are manufactured and furnished as a complete fitting and/or do not require thread interchangeability with conduit or other conduit fittings of locknuts need not comply.
4. In lieu of chamfer a countersink or recess may be used. The chamfer illustrated is at a 45° angle. This detail is not a requirement and is given for information only.

Authorized Engineering Information 1-11-1983.

▲ Revised.

Copyright National Electrical Manufacturers Association
Provided by IHS under license with NEMA
No reproduction or networking permitted without license from IHS
Not for Resale

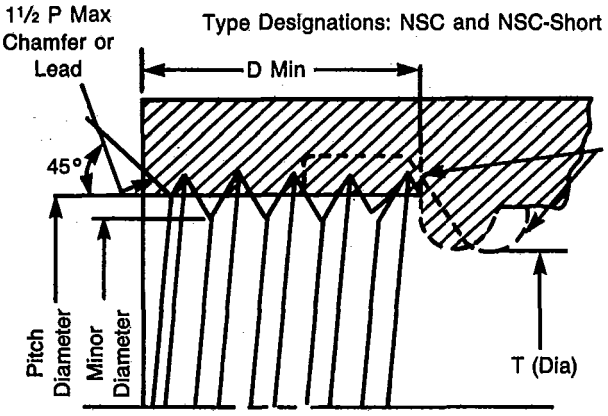

Optional—Manufacturer May Use Smooth Well Rounded Inlet Hole and Thread May Have an Undercut*

* Option is approved as Authorized Engineering Information.

Figure 4-4

BASIC DIMENSIONS OF INTERNAL STRAIGHT PIPE THREADS FOR CONDUIT FITTINGS HAVING SHORT THREADS ON BUSHINGS OR HUBS FOR USE WITH THREADED RIGID METAL CONDUIT, THREADED INTERMEDIATE METAL CONDUIT, OR OTHER ELECTRICAL FITTINGS HAVING TAPERED OR STRAIGHT EXTERNAL THREADS (CUT THREADS—FOR ORDINARY LOCATION APPLICATIONS ONLY)▲

Trade Size of Conduit, Inches	Threads Per Inch n	Pitch of Thread P	Minor Diameter (See Note 4)		Pitch Diameter		Throat Diameter T		Minimum Depth D†	
			Minimum	Maximum	Minimum	Maximum	Minimum	Maximum	Bushing NSC Short‡	Fitting NSC
⅜	18	0.05556	0.605	0.614	0.629	0.635	0.444	0.493	0.1945	0.4078
½	14	0.07143	0.750	0.762	0.781	0.788	0.560	0.622	0.2500	0.5337
¾	14	0.07143	0.961	0.973	0.992	0.999	0.742	0.824	0.2500	0.5457
1	11½	0.08696	1.206	1.216	1.244	1.252	0.944	1.049	0.3478	0.6828
1¼	11½	0.08696	1.551	1.560	1.588	1.596	1.242	1.380	0.3478	0.7068
1½	11½	0.08696	1.790	1.799	1.827	1.835	1.449	1.610	0.3478	0.7235
2	11½	0.08696	2.264	2.273	2.301	2.309	1.860	2.067	0.3478	0.7565
2½	8	0.1250	2.715	2.734	2.769	2.781	2.222	2.469	0.5000	1.1375
3	8	0.1250	3.341	3.360	3.396	3.408	2.761	3.068	0.5000	1.2000
3½	8	0.1250	3.842	3.855	3.896	3.908	3.193	3.548	0.5000	1.2500
4	8	0.1250	4.340	4.353	4.394	4.406	3.623	4.026	0.5000	1.3000
5	8	0.1250	5.402	5.415	5.456	5.468	4.542	5.047	0.5000	1.4063
6	8	0.1250	6.459	6.471	6.513	6.525	5.458	6.065	0.5000	1.5125

†Minimum depth that a NPSM plug gage with minimum pitch diameter must enter.
‡Minimum length for short threaded bushings or hubs.

NEMA Standard 9-20-1984.

1. All dimensions are after plating. Unless otherwise indicated all dimensions are in inches.▲
2. These threads are applicable to those threads to be used with conduit, other conduit fittings or apparatus. Those products which are manufactured and furnished as a complete fitting and/or do not require thread interchangeability with conduit or other conduit fittings or locknuts need not comply.
3. In lieu of chamfer a countersink or recess may be used. The chamfer illustrated is at a 45° angle. This detail is not a requirement and is given for information only.
4. See Table 7.7, Page 106, of National Bureau of Standards *Handbook 28*, Part II.

Authorized Engineering Information 9-20-1984.

▲ Revised.

Copyright National Electrical Manufacturers Association
Provided by IHS under license with NEMA
No reproduction or networking permitted without license from IHS
Not for Resale

Type Designation: Modified Buttress

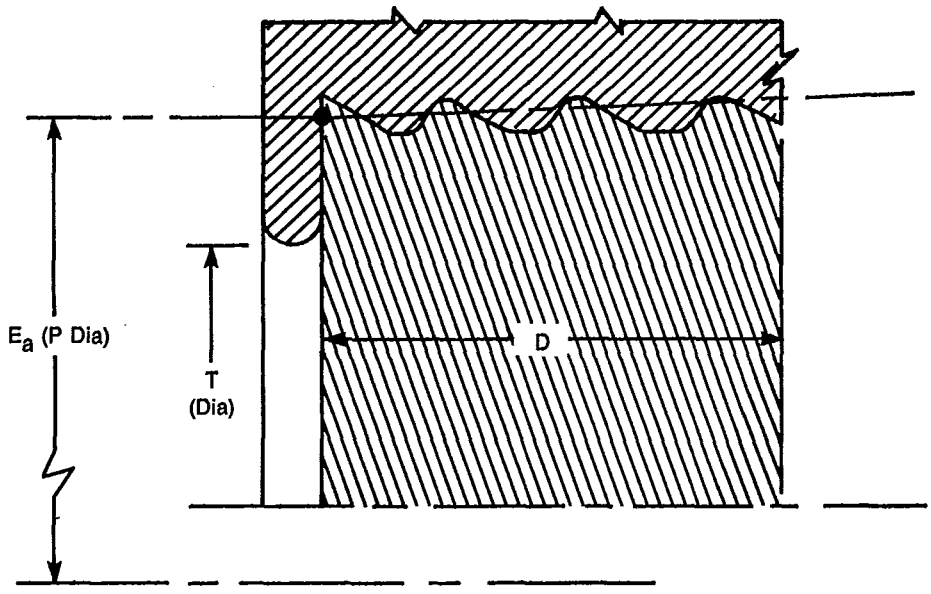

Figure 4-5

BASIC DIMENSIONS OF ONE TYPE OF BUTTRESS THREADS FOR THERMOPLASTIC INSULATING BUSHINGS FOR USE WITH THREADED RIGID METAL CONDUIT, THREADED INTERMEDIATE METAL CONDUIT, OR ELECTRICAL FITTINGS HAVING TAPERED OR STRAIGHT EXTERNAL THREADS

Trade Size of Conduit, Inches	Threads Per Inch n	Pitch of Thread P	Pitch Diameter E_a		Throat Diameter T		Minimum Depth Dt
			Minimum	Maximum	Minimum	Maximum	
½	14	0.07143	0.781	0.788	0.560	0.622	0.275
¾	14	0.07143	0.992	0.999	0.742	0.824	0.275
1	11½	0.08695	1.244	1.252	0.944	1.049	0.406
1¼	11½	0.08695	1.588	1.596	1.242	1.380	0.406
1½	11½	0.08695	1.827	1.835	1.449	1.610	0.406
2	11½	0.08695	2.301	2.309	1.860	2.067	0.469
2½	8	0.125	2.769	2.781	2.222	2.469	0.510
3	8	0.125	3.396	3.408	2.761	3.068	0.515
3½	8	0.125	3.896	3.908	3.193	3.548	0.515
4	8	0.125	4.394	4.406	3.623	4.026	0.535
5	8	0.125	5.456	5.468	4.542	5.047	0.680
6	8	0.125	6.513	6.525	5.458	6.065	0.680

†Minimum depth that a NPSM plug gage with minimum pitch diameter must enter.

NEMA Standard 1-11-1983.

1. All dimensions are after plating. Unless otherwise indicated, all dimensions are in inches.▲
2. These threads are applicable to those threads to be used with conduit, other conduit fittings or apparatus. Those products which are manufactured and furnished as a complete fitting and/or do not require thread interchangeability with conduit or other conduit fittings or locknuts need not comply.
3. Thread taper shall be ¾ inch per foot on the diameter. Crest of internal thread may be truncated to a 60 percent thread height as compared with sharp V buttress thread.

Authorized Engineering Information 9-20-1984.

▲ Revised.

Copyright National Electrical Manufacturers Association
Provided by IHS under license with NEMA
No reproduction or networking permitted without license from IHS

Not for Resale

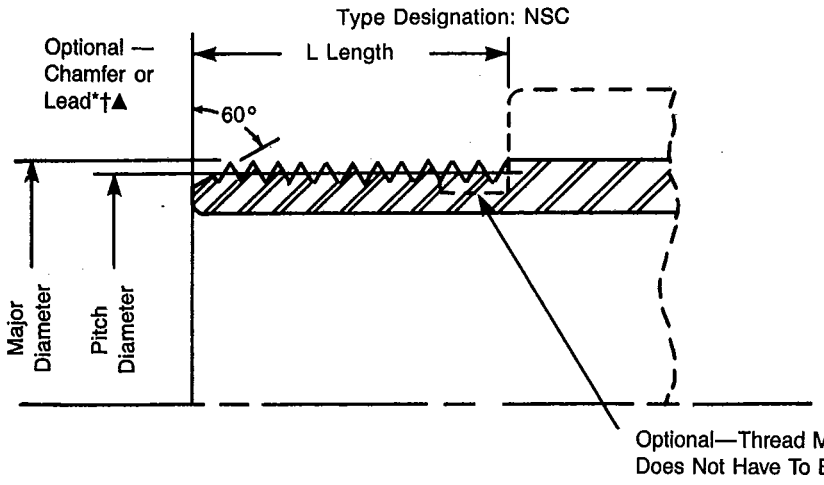

*Options are approved as Authorized Engineering Information.

†The chamfer illustrated is at a 60° angle. This detail is not a requirement and is given for information only.

‡An undercut should allow a locknut to be properly tightened with a minimum cabinet thickness.

Authorized Engineering Information 9-20-1984.

Figure 4-6

BASIC DIMENSIONS OF EXTERNAL STRAIGHT PIPE THREADS FOR CONDUIT FITTINGS FOR USE WITH THREADED RIGID METAL CONDUIT COUPLINGS, THREADED INTERMEDIATE METAL CONDUIT COUPLINGS, OR OTHER ELECTRICAL FITTINGS HAVING TAPERED OR STRAIGHT INTERNAL THREADS (CUT THREADS—FOR ORDINARY LOCATION APPLICATIONS ONLY)▲

Trade Size of Conduit, Inches	Threads Per Inch n	Pitch of Thread P	Major Diameter		Pitch Diameter		Minimum Length L**
			Minimum	Maximum	Minimum	Maximum	
⅜	18	0.05556	0.662	0.652	0.620	0.625	0.299
½	14	0.07143	0.812	0.823	0.770	0.776	0.323
¾	14	0.07143	1.023	1.034	0.981	0.987	0.338
1	11½	0.08696	1.278	1.293	1.228	1.236	0.391
1¼	11½	0.08696	1.624	1.638	1.573	1.581	0.391
1½	11½	0.08696	1.863	1.877	1.812	1.820	0.391
2	11½	0.08696	2.337	2.351	2.286	2.294	0.408
2½	8	0.125	2.822	2.841	2.748	2.760	0.654
3	8	0.125	3.449	3.467	3.375	3.386	0.654
3½	8	0.125	3.950	3.968	3.875	3.886	0.717
4	8	0.125	4.447	4.466	4.373	4.384	0.717
5	8	0.125	5.509	5.528	5.435	5.446	0.779
6	8	0.125	6.567	6.585	6.492	6.503	0.841

NEMA Standard 9-20-1984.

** These values are in accordance with requirements of UL 514A or UL 514B.▲

1. All dimensions are after plating. Unless otherwise indicated, all dimensions are in inches.▲
2. For suggested thread form see Fig. 4-10.
3. These threads are applicable to those threads to be used with conduit, other conduit fittings or apparatus. Those products which are manufactured and furnished as a complete fitting and/or do not require thread interchangeability with conduit or other conduit fittings or locknuts need not comply.

Authorized Engineering Information 9-20-1984.

▲ Revised.

Copyright National Electrical Manufacturers Association
Provided by IHS under license with NEMA
No reproduction or networking permitted without license from IHS
Not for Resale

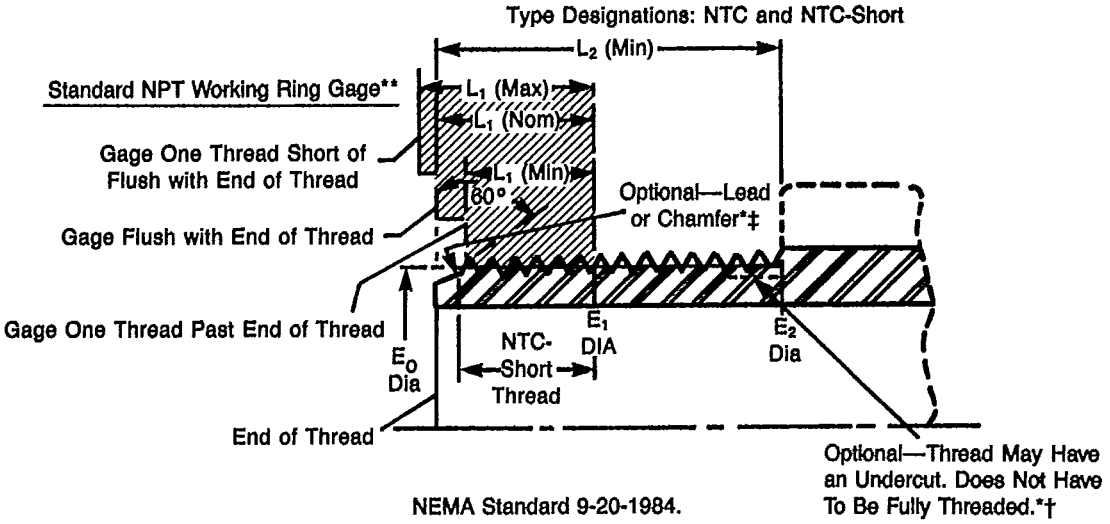

NEMA Standard 9-20-1984.

*Options are approved as Authorized Engineering Information.
**Standard NPT thin ring gages have a length equal to dimensional L_1 (nominal).
†An undercut should allow a locknut to be properly tightened with a minimum cabinet thickness.
‡The chamfer illustrated is at a 60° angle. This detail is not a requirement and is given for information only.

Authorized Engineering Information 9-20-1984.

Figure 4-7

BASIC DIMENSIONS OF EXTERNAL TAPERED THREADS FOR CONDUIT FITTINGS FOR USE WITH THREADED METAL CONDUIT COUPLINGS, THREADED INTERMEDIATE CONDUIT COUPLINGS, OR OTHER ELECTRICAL FITTINGS HAVING TAPERED OR STRAIGHT INTERNAL THREADS (CUT THREADS—FOR ORDINARY LOCATION APPLICATIONS ONLY)▲

				Handtight Engagement					NTC		
				Length L_1 (Nominal)			Number of Turns Gaged with Standard N.P.T. Working Ring Gage, Number of Threads				
Trade Size of Conduit, Inches	Threads Per Inch n	Pitch of Thread P	Pitch Diameter E_o	Inch	Number of Threads	E_1 Dia Pitch	Minimum	Maximum	Minimum Length L_2	E_2 Dia	NTC Short Minimum Thread Length‡
½	14	0.07143	0.7584	0.320	4.48	0.7784	3½	5½	0.5337	0.7918	0.323
¾	14	0.07143	0.9677	0.339	4.75	0.9888	3¾	5¾	0.5457	1.0018	0.338
1	11½	0.08696	1.2136	0.400	4.60	1.2386	3¾	5¾	0.6828	1.2563	0.391
1¼	11½	0.08696	1.5571	0.420	4.83	1.5834	4	6	0.7068	1.6013	0.391
1½	11½	0.08696	1.7961	0.420	4.83	1.8223	4	6	0.7235	1.8413	0.408
2	11½	0.08696	2.2690	0.436	5.01	2.2963	4	6	0.7565	2.3163	0.654
2½	8	0.125	2.7195	0.682	5.46	2.7622	4½	6½	1.1375	2.7906	0.654
3	8	0.125	3.3406	0.766	6.13	3.3885	5¼	7¼	1.2000	3.4156	0.717
3½	8	0.125	3.8375	0.821	6.57	3.8885	5¾	7¾	1.2500	3.9156	0.717
4	8	0.125	4.3344	0.844	6.75	4.3871	5¾	7¾	1.3000	4.4156	0.750
5	8	0.125	5.3907	0.937	7.50	5.4493	6½	8½	1.4063	5.4786	0.779
6	8	0.125	6.4461	0.958	7.66	6.5060	6¾	8¾	1.5125	6.5406	0.841

‡ Minimum thread length which conforms to UL 514B, Table 10.1, shall be taken from E_1 pitch diameter and the tapered length shall run smaller in diameter from that point.▲

NEMA Standard 9-20-1984.

1. All dimensions are after plating. Unless otherwise indicated, all dimensions are in inches.▲
2. For suggested thread form see Figure 4-10.
3. These threads are applicable to those threads to be used with conduit, other conduit fittings or apparatus. Those products which are manufactured and furnished as a complete fitting and/or do not require thread interchangeability with conduit or other conduit fittings or locknuts need not comply.

Authorized Engineering Information 9-20-1984.

▲ Revised.

Copyright National Electrical Manufacturers Association
Provided by IHS under license with NEMA
No reproduction or networking permitted without license from IHS
Not for Resale

Type Designation: Fitting Locknut

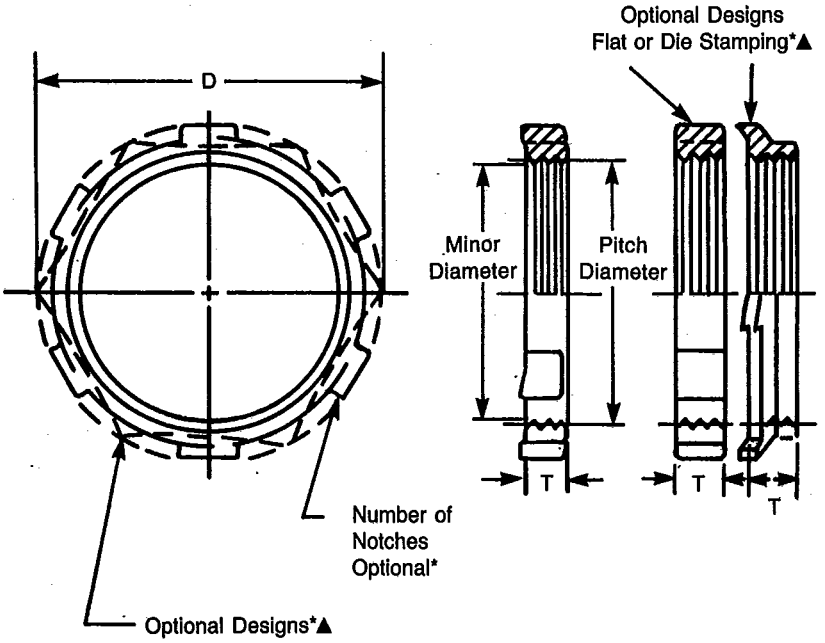

*Options are approved as Authorized Engineering Information.

Figure 4-8

BASIC DIMENSIONS OF INTERNAL STRAIGHT PIPE THREADS FOR ELECTRICAL FITTING LOCKNUTS FOR USE WITH ELECTRICAL FITTINGS HAVING TYPE NTC SHORT TAPERED EXTERNAL THREADS OR TYPE NSC STRAIGHT EXTERNAL THREADS

Trade Size of Conduit, Inches	Threads Per Inch	Pitch of Thread	T Thickness, Minimum	Pitch Diameter		Maximum O.D. D	Minor Diameter	
				Minimum	Maximum		Minimum	Maximum
⅜	18	0.05556	0.090	0.633	0.640	0.970	0.612	0.622
½	14	0.07143	0.090	0.781	0.797	1.140	0.759	0.769
¾	14	0.07143	0.110	0.992	1.007	1.420	0.969	0.979
1	11½	0.08696	0.130	1.251	1.262	1.770	1.213	1.223
1¼	11½	0.08696	0.130	1.596	1.607	2.281	1.558	1.568
1½	11½	0.08696	0.130	1.835	1.846	2.598	1.800	1.810
2	11½	0.08696	0.130	2.309	2.320	3.175	2.274	2.284
2½	8	0.12500	0.175	2.783	2.799	3.562	2.750	2.762
3	8	0.12500	0.175	3.408	3.425	4.250	3.375	3.387
3½	8	0.12500	0.175	3.908	3.925	4.803	3.875	3.887
4	8	0.12500	0.175	4.406	4.425	5.402	4.375	4.387
5	8	0.12500	0.375	5.468	5.485	6.674	5.434	5.446
6	8	0.12500	0.375	6.525	6.542	7.934	6.491	6.503

NEMA Standard 9-20-1984.

1. All dimensions are after plating. Unless otherwise indicated, all dimensions are in inches and apply to cut threads only.▲
2. These threads are applicable to those threads to be used with conduit, other conduit fittings or apparatus. Those products which are manufactured and furnished as a complete fitting and/or do not require thread interchangeability with conduit or other conduit fittings or locknuts need not comply.

Authorized Engineering Information 9-20-1984.

▲ Revised.

Copyright National Electrical Manufacturers Association
Provided by IHS under license with NEMA
No reproduction or networking permitted without license from IHS
Not for Resale

Type Designation: Conduit Locknut

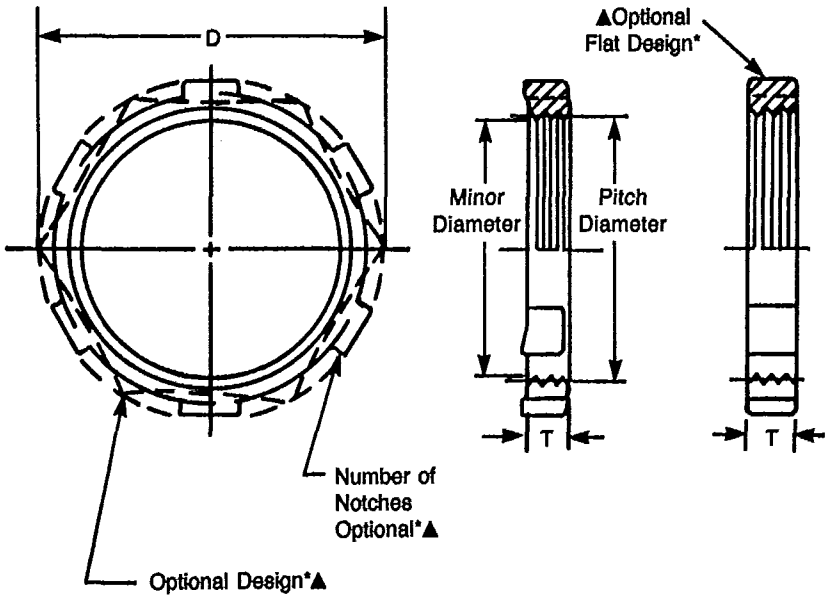

*Options are approved as Authorized Engineering Information.

Figure 4-9

BASIC DIMENSIONS OF INTERNAL STRAIGHT PIPE THREADS FOR LOCKNUTS FOR USE WITH THREADED RIGID METAL CONDUIT AND THREADED INTERMEDIATE METAL CONDUIT

Trade Size of Conduit, Inches	Threads Per Inch	Pitch of Thread	Suggested Minimum Pitch Diameter	Maximum O.D D	T Thickness, Minimum●
⅜	18	0.05556	0.643	0.970	0.125
½	14	0.07143	0.799	1.140	0.125
¾	14	0.07143	1.009	1.420	0.140
1	11½	0.08696	1.264	1.770	0.170
1¼	11½	0.08696	1.609	2.281	0.170
1½	11½	0.08696	1.849	2.598	0.170
2	11½	0.08696	2.323	3.175	0.187
2½	8	0.12500	2.801	3.562	0.375
3	8	0.12500	3.427	4.250	0.375
3½	8	0.12500	3.927	4.803	0.438
4	8	0.12500	4.426	5.402	0.438
5	8	0.12500	5.488	6.674	0.500
6	8	0.12500	6.545	7.934	0.562

NEMA Standard 9-20-1984.

All dimensions are after plating and apply to cut threads only.▲

Authorized Engineering Information 9-20-1984.

▲ Revised.
● Added.

Copyright National Electrical Manufacturers Association
Provided by IHS under license with NEMA
No reproduction or networking permitted without license from IHS

Not for Resale

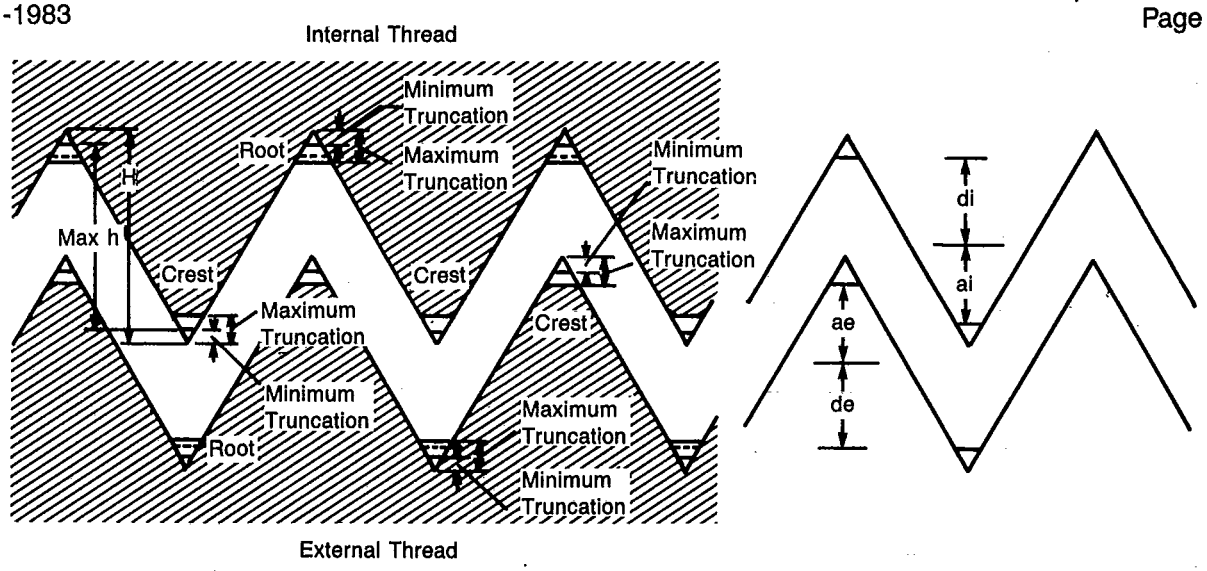

Figure 4-10
SUGGESTED THREAD FORM

1. Dimensions on gages, such as plain taper plug and ring gages, which depend on maximum and minimum truncations, shall be determined by applying the thread height to the basic pitch diameter.●
2. Thread taper shall be ¾ inch per foot on the diameter.● NEMA Standard 9-20-1984.
3. These thread forms were developed primarily for cut tapered threads. When used for straight threads caution should be applied so as not to deviate from the major and minor diameter indicated on the specific suggested thread standard.●

INTERNAL THREADS*

Threads per inch, n	Height of Sharp V Thread, H	Height of Thread, h			Truncation, f				Equivalent Width of Flat, F	
					Root, Max = 0.108P Min = 0.033P	Crest, Max = 0.217P Min = 0.033P	Addendum ai, Max = 0.462H Min = 0.25H	Dedendum di, Max = 0.462H Min = 0.375H	Root, Max = 0.125P Min = 0.038P	Crest, Max = 0.25P Min = 0.038P
		Max	Min							
18	0.04811	0.0444	0.0300	18P Max	0.0060	0.0121	0.0222	0.0222	0.0069	0.0139
				18P Min	0.0018	0.0018	0.0120	0.0180	0.0021	0.0021
14	0.06186	0.0572	0.0387	14P Max	0.0077	0.0155	0.0286	0.0286	0.0089	0.0179
				14P Min	0.0024	0.0024	0.0155	0.0232	0.0027	0.0027
11½	0.07531	0.0696	0.0470	11½P Max	0.0094	0.0189	0.0348	0.0348	0.0109	0.0218
				11½P Min	0.0029	0.0029	0.0188	0.0282	0.0033	0.0033
8	0.10825	0.10000	0.0677	8P Max	0.0135	0.0271	0.0500	0.0500	0.0156	0.0313
				8P Min	0.0041	0.0041	0.0271	0.0400	0.0048	0.0048

EXTERNAL THREADS*

Threads per inch, n	Height of Sharp V Thread, H	Height of Thread, h			Truncation, f				Equivalent Width of Flat, F	
					Root, Max = 0.152P Min = 0.033P	Crest, Max = 0.217P Min = 0.033P	Addendum ae, Max = 0.462H Min = 0.25H	Dedendum de, Max = 0.462H Min = 0.325H	Root, Max = 0.175P Min = 0.038P	Crest, Max = 0.25P Min = 0.038P
		Max	Min							
18	0.04811	0.0444	0.0276	18P Max	0.0084	0.0121	0.0222	0.0222	0.0097	0.0139
				18P Min	0.0018	0.0018	0.0120	0.0156	0.0021	0.0021
14	0.06186	0.0572	0.0356	14P Max	0.0109	0.0155	0.0286	0.0286	0.0125	0.0179
				14P Min	0.0024	0.0024	0.0155	0.0201	0.0027	0.0027
11½	0.07531	0.0696	0.0433	11½P Max	0.0132	0.0189	0.0348	0.0348	0.0152	0.0218
				11½P Min	0.0029	0.0029	0.0188	0.0245	0.0033	0.0033
8	0.10825	0.1000	0.0623	8P Max	0.0190	0.0271	0.0500	0.0500	0.0219	0.0313
				8P Min	0.0041	0.0041	0.0271	0.0352	0.0048	0.0048

* The basic dimensions of the American Standard taper pipe thread are given in inches to four and five decimal places. While this implies a greater degree of precision than is ordinarily attained these dimensions are so expressed for the purpose of eliminating errors in computations. The limits specified in this table are intended to serve as a guide for establishing limits of the thread elements of taps, dies and thread chasers. These limits may apply on product.

Authorized Engineering Information 9-20-1984.

Copyright National Electrical Manufacturers Association
Provided by IHS under license with NEMA
No reproduction or networking permitted without license from IHS
Not for Resale

4.2 KNOCKOUT DIMENSIONS

Compatibility of knockout dimensions shall be in accordance with Table 4-1.

NEMA Standard 9-20-1984.

Table 4-1
COMPATIBILITY OF KNOCKOUT DIMENSIONS WITH LOCKNUTS, BUSHINGS, AND METAL CONDUIT (IMC OR RIGID) TO ASSURE COORDINATION[a)b)]

						Metallic Bushing With or Without Insulated Throat (See Fig. 4-11A)		Nonmetallic Bushing With Locknut on Inside of Enclosure (See Fig. 4-11B)	
Trade Size of Conduit, Nom.	Major Diameter of External Thread		Knockout Diameter[c)f)]			Diameter at Flange, Min.	Overlap over Nominal Knockout, Min.[f)]	Covering Diameter of Locknut, Min.	Overlap over Nominal Knockout, Min.[f)]
	Min.[e)]	Max.[d)]	Min.	Nom.	Max.				
Col. 1	Col. 2 Dim. P	Col. 3	Col. 4	Col. 5 Dim. K	Col. 6	Col. 7 Dim. A	Col. 8 Dim. X	Col. 9 Dim. B	Col. 10 Dim. X
½	0.815	0.855	0.859	0.875	0.906	1.00	0.033	0.937	0.001
¾	1.029	1.066	1.094	1.109	1.141	1.23	0.021	1.189	0.000
1	1.290	1.331	1.359	1.375	1.406	1.54	0.040	1.485	0.013
1¼	1.638	1.676	1.719	1.734	1.766	1.92	0.045	1.859	0.015
1½	1.878	1.916	1.958	1.984	2.016	2.18	0.045	2.109	0.010
2	2.352	2.399	2.433	2.469	2.500	2.68	0.047	2.635	0.025
2½	2.843	2.904	2.938	2.969	3.000	3.20	0.053	3.156	0.030
3	3.469	3.535	3.583	3.594	3.625	3.83	0.056	3.812	0.046
3½	3.970	4.040	4.063	4.125	4.156	4.40	0.060	4.343	0.032
4	4.466	4.545	4.563	4.641	4.672	4.94	0.062	4.890	0.037
5	5.530	5.619	5.625	5.719	5.750	6.05	0.071	6.062	0.077
6	6.587	6.691	6.700	6.813	6.844	7.20	0.081	7.110	0.035

a) Dimensional changes in Cols. 2 (Dim. P), 5 (Dim. K), 7 (Dim. B), or 9 (Dim. B) may cause an incompatible assembly.
b) These dimensions are for knockout diameters for single or concentric types only and exclude any projection of breakout ears or tabs.
c) This dimension is the nominal major diameter of the thread at E_1 (see Figure 4-7) or the nominal diameter of the intermediate metal conduit (Ref:UL 6, UL 514B, UL 1242), whichever is less.▲
d) The maximum diameter of rigid conduit (Ref: ANSI C80.1).▲
e) Dimensions for trade sizes of ½ through 1¼ are from UL 514B. Minimum dimension for larger sizes is necessary to clear the maximum diameter of the external thread (i.e., Col. 4 is greater than Col. 3).▲
f) The stated values are calculated: the minimum overlap (Dim. X) equals the minimum diameter (at flange or outer diameter of locknut) (Dim. B), minus the minimum major diameter (Dim P), divided by 2, minus the conduit clearance (Dim C), where Dim. C equals the nominal knockout diameter (Dim. P). The relationship is given by:

$$X = \frac{B-P}{2} - (K-P)$$

(Refer to Figure 4-11C)

▲ Revised.

Copyright National Electrical Manufacturers Association
Provided by IHS under license with NEMA
No reproduction or networking permitted without license from IHS
Not for Resale

4.3 DIMENSIONS OF FLAT SURFACES SURROUNDING KNOCKOUTS

Figure 4-11 illustrates dimensions of flat surfaces surrounding knockouts.

Authorized Engineering Information 1-11-1983.

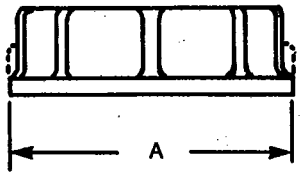

Metallic Bushing
Fig. 4-11A

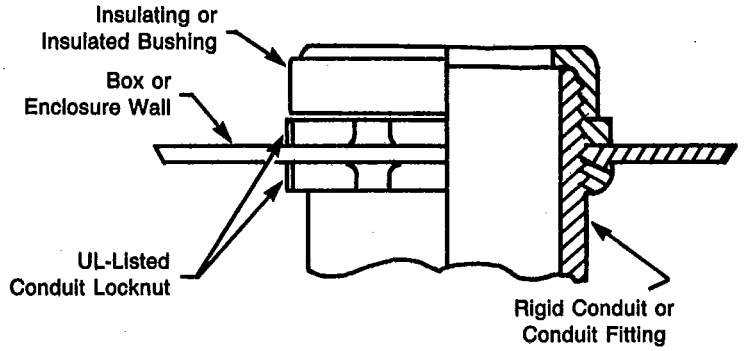

Nonmetallic Bushing with Locknut
Inside of Enclosure
Fig. 4-11B

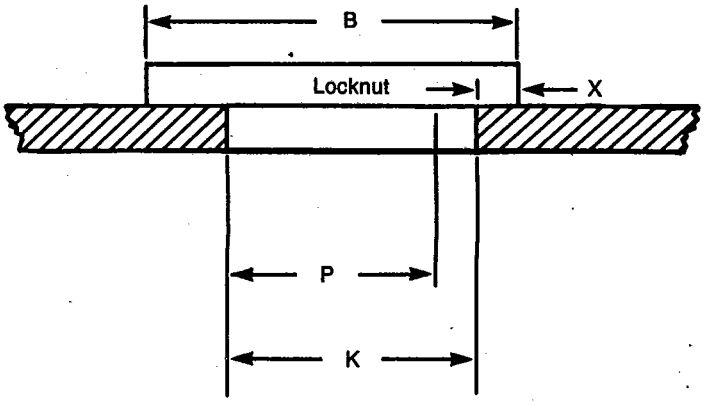

Minimum Overlap Over
Nominal Knockout
Fig. 4-11C

Figure 4-11
DIMENSIONS OF FLAT SURFACES SURROUNDING KNOCKOUTS
(ILLUSTRATIONS ARE NOT DESIGN DETAILS)

Copyright National Electrical Manufacturers Association
Provided by IHS under license with NEMA
No reproduction or networking permitted without license from IHS
Not for Resale

Section 5
TYPE DESIGNATIONS FOR BOXES, JUNCTION BOXES, AND ENCLOSURES OVER 100 CUBIC INCHES

See NEMA Standards Publication No. 250, *Enclosures for Electrical Equipment (1000 Volts Maximum)*, for Type Designations.

Authorized Engineering Information 1-11-1983.

Section 6
DESIGN TESTS

6.1 GENERAL

The term box used in this Section refers to junction boxes, pull boxes, and enclosures.

The following design tests shall be made when required by Sections 2 and 3 and shall be used to demonstrate conformance with these standards. In addition, those boxes having Type Designations referenced in Section 5 shall be subjected to the applicable design tests specified in NEMA Standards Publication No. 250, *Enclosures for Electrical Equipment (1000 Volts Maximum).*

These design tests do not necessarily duplicate environmental conditions and are not contemplated in normal production. To assure realistic testing, the fitting or box shall be mounted as it would be in service.

Unless otherwise specified, one sample of each fitting, box or enclosure shall be subjected to the required tests. Where more than one sample is required, all samples shall pass the test.

NEMA Standard 1-11-1983.

6.2 ROD-ENTRY TEST

This test shall be made by attempting to insert the end portion of a ⅛-inch diameter straight rigid rod into the equipment cavity of the box or fitting (after the fitting has clamped the conduit or cable assembly in place). The fitting or box conforms to the standard if the rod cannot enter the fitting or box.

NEMA Standard 1-11-1983.

6.3 RAIN TEST

6.3.1 Method

The complete fitting or box shall be assembled to its raceway in the intended manner.

A continuous water spray, using as many nozzles as are required, shall be applied against the entire top and all exposed sides of the fitting or box for 1 hour at an approximate rate of 18 inches per hour and an operating pressure of 5 psi. The rate shall be determined by measuring the rise of water in a straight-sided pan which has been placed horizontally and completely within the area covered by the falling water. A rain test which is performed in accordance with UL 514A or UL 514B is considered to be equivalent to this test.

6.3.2 Evaluation

The fitting or box is considered raintight if no water has entered it.

NEMA Standard 1-11-1983.

6.4 RUST-RESISTANCE TEST▲

6.4.1 Evaluation

Ferrous fittings or boxes and enclosures, and fittings with ferrous components, should be subjected to salt spray (fog) and are considered rust-resistant if there is no red rust at the completion of the following test.

6.4.2 Test Apparatus

1. The test apparatus should consist of a fog chamber, a salt-solution reservoir, a supply of conditioned

▲ Revised.

Copyright National Electrical Manufacturers Association
Provided by IHS under license with NEMA
No reproduction or networking permitted without license from IHS

Not for Resale

compressed air, atomizing nozzles, support for the fitting or box, provision for heating the chamber, and means of control.

2. The test apparatus should not permit drops of solution which accumulate on the ceiling or cover of the chamber to fall on the fitting or box being tested.

3. The test apparatus should not permit drops of solution which fall from the fitting or box to be returned to the solution reservoir for respraying.

4. The test apparatus should be constructed of materials which will not affect the corrosiveness of the fog.

6.4.3 Salt Solution

The salt solution should be prepared by dissolving 5 parts ±1 part by weight of salt in 95 parts of either distilled water or water containing not more than 200 parts per million of total solids. The salt should be sodium chloride which is substantially free of nickel and copper and which contains, when dry, not more than 0.1 percent of sodium iodide and not more than 0.3 percent of total impurities.

6.4.4 Air Supply

The compressed air supply to the nozzle(s) for atomizing the salt solution should be free of oil and dirt and maintained at between 10 and 25 psi.

6.4.5 Condition in the Salt-spray Chamber

The temperature in the salt-spray chamber should be maintained at 35°C, +1.1°C −1.7°C. The nozzle(s) should be directed or baffled so that none of the spray can impinge directly on the fitting or box being tested.

6.4.6 Continuity of Test

The test should be run continuously for 24 hours, i.e., the chamber should be closed and the spray operated continuously except for the short daily interruption necessary to inspect, to rearrange, or to remove the test specimens, to check and replenish the solution in the reservoir, and to make necessary recordings.

6.4.7 Cleaning and Inspection of Test Specimens

At the end of the test, the specimens should be removed from the chamber and washed in clean running water, which is not warmer than 38°C, to remove salt deposits from their surface, and then dried immediately. Corrosion products should be removed by light brushing, if required, to observe corrosion of the underlying stratum.

Authorized Engineering Information 9-20-1984.

▲ Revised.

6.5 CORROSION-RESISTANCE TEST (CORROSION-RESISTANT)▲

6.5.1 Method

The corrosion-resistance test should be the same as the rust-resistance test described in 6.4, except that the exposure is 200 hours.

6.5.2 Evaluation

A fitting or box is considered to be corrosion-resistant if it does not show pitting, cracking, or other deterioration more severe than that resulting from a similar test on passivated AISI Type 304 stainless steel after 200 hours of exposure.

Authorized Engineering Information 9-20-1984.

6.6 OIL TEST (OILTIGHT)

6.6.1 Method

A complete fitting or box shall be assembled to its cable or raceway in the intended manner.

The box or fitting shall be subjected to a stream of test liquid through a nozzle which has a ⅜-inch-diameter opening and which delivers at least 2 gallons per minute. The stream shall be directed upon the box or fitting from all angles from a distance of 12 to 18 inches for 30 minutes.

6.6.2 Evaluation

The box or fitting is considered to be oiltight and dusttight if no test liquid has entered.

NEMA Standard 1-11-1983.

6.7 CONCRETE TEST

6.7.1 Method

The box or fittings shall be assembled in the intended manner to short lengths of a conduit or tubing of the proper size and, when possible, the raceway shall be pushed against the end of the centering stop of the fitting before the fitting is tightened. The tightening torque applied to the fitting shall be that given in Table 6-1 for threadless fittings, except that a fitting which can be tightened by means of a screwdriver or a bolt-head screw shall be tightened as described in 3.3 par. 6a. The ends of the raceway shall be sealed. The assembly shall be placed in the bottom of a box having a depth of 2 feet and that box shall be filled with concrete mixed in accordance with 6.7.2. Twenty-four hours after the concrete has been poured, it shall be broken loose from the box or fitting, and the interior shall be examined.

6.7.2 Concrete Sand Mixture

Ordinary grey cement shall be used in the preparation of concrete. The sand shall be of the type known to the

Copyright National Electrical Manufacturers Association
Provided by IHS under license with NEMA
No reproduction or networking permitted without license from IHS
Not for Resale

construction industry as *mason* sand. The cement-sand ratio shall be 1:2 by volume. There shall be a 1/16-inch-deep film of water on the surface of the mixture after it has stood for 1 minute in the mixing vat.▲

6.7.3 Evaluation

The fitting or box is considered to be concrete tight if no concrete has entered through the fitting or box.

NEMA Standard 9-20-1984.

6.8 FLAME TEST

6.8.1 Method

1. The flame test shall be conducted in a three-sided enclosure that is 12 inches wide, 14 inches deep, and 24 inches high. The top and front of the enclosure shall be open. The room or hood in which the enclosure is located for the test shall be adequately ventilated; drafts shall be prevented from affecting the test flame. A 4-inch-square specimen of the molded composition, in sheet form, having a thickness equal to the minimum thickness used for the body of the enclosure shall be secured with its vertical axis in the center of the test enclosure and with both axes parallel to the back of the test enclosure. See Figure 6-1.

2. A Tirrill gas burner to which a gas pilot light is attached shall supply the test flame. The barrel of the burner shall extend 4 inches above the air inlets and its inside diameter shall be 3/8 inch. While the barrel is verticle, the overall height of the flame shall be adjusted to 5 inches. The blue inner cone shall be 1½ inches high. Without disturbing the adjustments for the height of the flame, the valves supplying gas to the burner and pilot flames shall be closed.

3. A wedge to which the base of the burner can be secured shall be provided for tilting the barrel 20 degrees from the vertical, while the longitudinal axis of the barrel remains in a vertical plane. The burner shall be secured to the wedge and the assembly placed in an adjustable jig that is attached to the floor of the test enclosure. The jig shall be adjusted laterally (see Figure 6-1) to place the longitudinal axis of the barrel in the same vertical plane as the vertical axis of the specimen. The plane shall be parallel to the sides of the test enclosure.

4. The jig shall also be adjusted toward the rear or front of the enclosure (see Figure 6-1) so as to position point "A" (the intersection of the longitudinal axis of the barrel with the plane of the tip of the barrel) 1½ inches from point "B," at which the extended longitudinal axis of the barrel meets the front surface of the specimen. Point "B" is the point at which the tip of the inner blue cone will touch the specimen. The specimen shall be adjusted vertically to place point "B" at the center of the specimen.

5. The valve supplying gas to the pilot shall be opened and the pilot flame lit. The valve supplying gas to the burner shall be opened to automatically apply the flame to the specimen. This valve shall be held open for 15 seconds and then closed for 15 seconds. This procedure shall be repeated four times for a total of five applications of flame to the specimen.

Table 6-1
TIGHTENING TORQUE, BENDING LOAD, AND PULLOUT FORCE FOR THREADED AND THREADLESS FITTINGS

Trade Size of Fitting, Inches	Test Tightening Torque, Pound-Inches	Bending Load, Pounds		Pullout Force, Pounds: EMT, Rigid Conduit & Intermediate Metal Conduit
		EMT	Rigid Conduit & Intermediate Metal Conduit	
3/8	200	15	30	200
1/2	300	20	60	300
3/4	500	35	80	450
1	700	50	120	600
1¼	1000	75	160	700
1½	1200	85	160	800
2	1600	110	160	1000
2½	1600	110	160	1000
3	1600	110	160	1000
3½	1600	110	160	1000
4	1600	110	160	1000
5	1600	110	160	1000
6	1600	110	160	1000

▲ Revised.

Copyright National Electrical Manufacturers Association
Provided by IHS under license with NEMA
No reproduction or networking permitted without license from IHS
Not for Resale

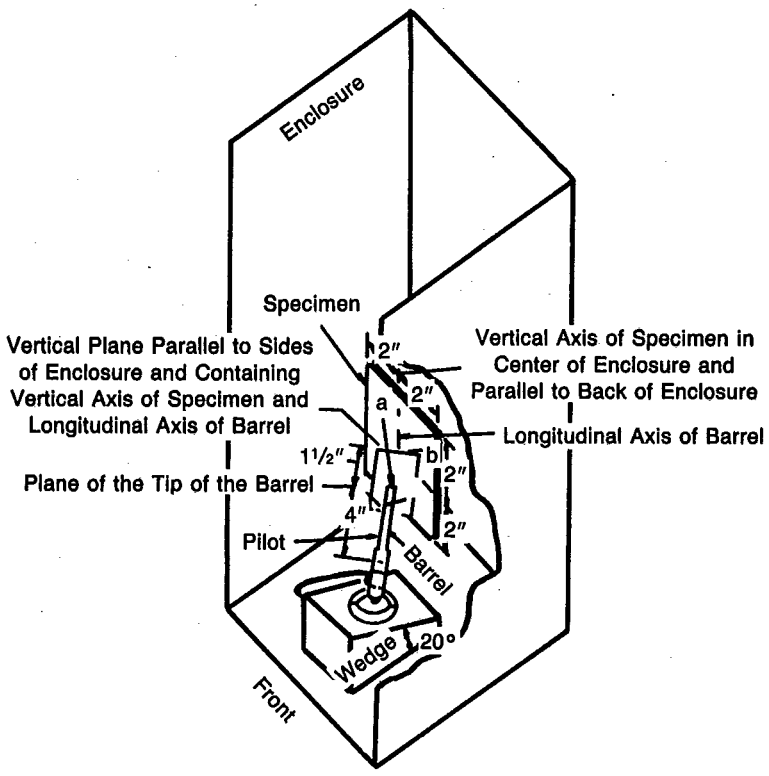

Figure 6-1
DIMENSIONS OF TEST APPARATUS AND SPECIMEN FOR FLAME TEST

6.8.2 Evaluation

The specimen shall not support combustion for more than 1 minute after the fifth 15-second application of the flame.

NEMA Standard 1-11-1983.

6.9 ELECTRICAL CONTINUITY TEST

Unless otherwise specified, fittings shall have a maximum voltage drop of 10 millivolts† when a 30-ampere direct current is passed through the fitting.

The voltage drop shall be measured across the fitting between two points, one on the outside of the enclosure 1/16 inch from the edge of the fitting, and the other on the conduit 1/16 inch from the fitting. For a coupling, the voltage drop shall be measured between two points: one on each section of the conduit or tubing and 1/16 inch from the fitting.

A telescoping fitting which has been moved through to its maximum position more than 100 times after the fitting has been subjected to either the rust-resistant or corrosion-resistant test, outlined in 6.4 or 6.5 (depending on the rust- or corrosion-resistant designation of the fitting), shall have a maximum voltage drop of 15 millivolts across the fitting.

NEMA Standard 1-11-1983.

An expansion joint intended for use with an external bonding jumper need not comply with the requirements of 6.9.

Authorized Engineering Information 9-20-1984.

6.10 ELASTOMERIC MATERIALS DETERIORATION TEST

1. Internal rubber and other elastomeric components shall show no apparent deterioration, and shall not show a change in hardness of more than five numbers (0.005 inch) after exposure to oxygen at a pressure of 300 ± 10 psi and a temperature of 70 ± 1°C for 96 hours.

The hardness of the unaged material shall be determined as the average of five readings with a gage, such as the Rex Hardness Gage of the Shore Durometer. The component shall then be exposed to oxygen for 96 hours in accordance with the method described in ANSI/UL 44. The component shall be allowed to rest at room

†50 millivolts for liquid-tight flexible metallic conduit fittings, flexible metal conduit fittings, armored cable connectors, and metal clad (Type MC) cable connectors (armored and interlocked armored).

▲ Revised.

Copyright National Electrical Manufacturers Association
Provided by IHS under license with NEMA
No reproduction or networking permitted without license from IHS
Not for Resale

temperature for not less than 4 hours after being removed from the oxygen bomb. The hardness shall then be determined again as the average of five readings. The difference between the original hardness reading and the reading taken after exposure to oxygen is the change in hardness.▲

2. A rubber or rubber-like material used in a liquid-tight conduit fitting shall show no apparent deterioration after exposure to oxygen at a pressure of 70 ±10 psig and a temperature of 70±1°C for 96 hours.

NEMA Standard 9-20-1984.

6.11 TESTS FOR ASSIGNING TEMPERATURE RATINGS TO INSULATING MATERIAL USED FOR BUSHINGS

1. A bushing or fitting shall be placed in a circulating air oven at the temperature specified in Table 6-3 for a period of 168 hours.

Six samples shall be tested except that, if a line of fittings of a particular design is being investigated, three samples of each trade size shall be tested.

The bushing or fitting does not meet the requirements of this test if the throat becomes so distorted as to reduce the inside diameter of the throat to a dimension less than 90 percent of the value specified as a minimum in Table 2-6.

2. A bushing or fitting shall be installed in the intended manner (mounted on tubing or conduit).

The tubing or conduit shall be mounted horizontally in a circulating air oven at the conditioning temperature specified in Table 6-3. A loop of 12-AWG bare solid copper conductor shall be brought through the open end of each section of tubing or conduit. A 10-pound weight shall be suspended from the conductor loop. The test shall be continued for a period of 72 hours.▲

Table 6-3
CONDITIONING TEMPERATURES

Temperature Rating of Device, Degrees C	Conditioning Temperature, Degrees C*
90	112
105	128
150	173

*This temperature equals the rated temperature of the fitting or part plus 15°C plus 2 percent of the rated temperature on the absolute scale.

Six samples shall be tested except that, if a line of fittings of a particular design is being investigated, three samples of each trade size shall be tested.

The fitting or bushing does not meet the requirements of this test if the insulating material cracks or melts so as to expose metal or form an incomplete insulating throat.

The conditioned samples shall be allowed to return to room temperature. Each sample made of other than insulating material, but having a throat made of insulating material, shall be dropped on a hardwood surface from a height of 1 foot. The sample does not meet the requirements of this test if the insulating throat is dislodged by the impact.

NEMA Standard 9-20-1984.

6.12 ENVIRONMENTAL CONDITIONING▲

Environmental conditioning consists of tests and procedures intended to simulate aging of installed electrical products to evaluate performance after long-term exposure.

Authorized Engineering Information 9-20-1984.

▲ Revised.

Copyright National Electrical Manufacturers Association
Provided by IHS under license with NEMA
No reproduction or networking permitted without license from IHS
Not for Resale

Section 7
METRIC CONVERSION▲

Dimensional units in this Standards Publication are based on the inch-pound-second system of measurement. This system of measurement is commonly accepted and used by the electrical construction industry. Applications requiring metric units of measurement should be in accordance with the modernized metric system known as the International System of Units (SI). For metric conversion practices see ANSI/IEEE Std 268. However, no SI metric units should be assigned to conduit sizes and trade sizes that do not reflect actual measurements.

Authorized Engineering Information 9-20-1984.

▲ Revised.

Copyright National Electrical Manufacturers Association
Provided by IHS under license with NEMA
No reproduction or networking permitted without license from IHS
Not for Resale

September 1984

NEMA STANDARDIZATION

The purpose of NEMA Standards, their classification and status are set forth in certain clauses of the NEMA Bylaws, which are quoted below:

Purpose of Standards

National Electrical Manufacturers Association Standards are adopted in the public interest and are designed to eliminate misunderstandings between the manufacturer and the purchaser and to assist the purchaser in selecting and obtaining the proper product for its particular need. Existence of a National Electrical Manufacturers Association Standard does not in any respect preclude any member or nonmember from manufacturing or selling products not conforming to the standard.

(Bylaw—Art. V, Sec. 1)

Definition of a Standard

A standard of the National Electrical Manufacturers Association defines a product, process or procedure with reference to one or more of the following: nomenclature, composition, construction, dimensions, tolerances, safety, operating characteristics, performance, rating, testing, and the service for which they are designed.

(Bylaw—Art. V, Sec. 2, Subsection A)

Dimensions

Where dimensions are given for interchangeability purposes, alternate dimensions satisfying the other provisions of the standards publication may be capable of otherwise equivalent performance.

(NEMA Policy Memorandum 84-2, dated June 7, 1984)

Classes of Standards

National Electrical Manufacturers Association Standards are of two classes:

1. NEMA Standard, which relates to a product commercially standardized and subject to repetitive manufacture, which standard has been approved by at least 90 percent of the members of the Subdivision eligible to vote thereon;
2. Suggested Standard for Future Design, which may not have been regularly applied to a commercial product, but which suggests a sound engineering approach to future development, which standard has been approved by at least two-thirds of the members of the Subdivision eligible to vote thereon.

(Bylaw—Art. V, Sec. 2, Subsection B)

Authorized Engineering Information

Authorized Engineering Information consists of explanatory data and other engineering information of an informative character not falling within the classification of NEMA Standard or Suggested Standard for Future Design.

(Bylaw—Art. V, Sec. 6, 1st Sentence)

Official Standards Proposal

An Official Standards Proposal is an official draft of a proposed standard which is formally recommended to an outside organization(s) for consideration, comment and/or approval.

(Bylaw—Art. V, Sec. 4, Subsection A)

Identification of Status

Standards in NEMA Standards Publications are identified in the foreword or following each standard as "NEMA Standard" or "Suggested Standard for Future Design." These indicate the status of the standard. These words are followed by a date which indicates when the standard was adopted in its present form by the Association.

The material identified as "Authorized Engineering Information" and "Official Standards Proposal" is designated similarly.

Copyright National Electrical Manufacturers Association
Provided by IHS under license with NEMA
No reproduction or networking permitted without license from IHS
Not for Resale

CONDUIT FITTINGS SECTION
OF THE
NATIONAL ELECTRICAL MANUFACTURERS ASSOCIATION
MEMBER COMPANIES

Adalet-Plm/Div. Scott & Fetzer Co.
Cleveland, OH 44135

Appleton Electric Company
Chicago, IL 60657

Arlington Industries, Inc.
Miami, FL 33166

Atlas Technologies, Inc.
Atlas Electrical Fittings Division
Scranton, PA 18509

Bridgeport Fittings, Inc.
Bridgeport, CT 06601

Challenger Electrical Materials, Inc.
Parkersburg, WV 26101

Crouse-Hinds Company
Electrical Construction Materials Division
Cooper Industries, Inc.
Syracuse, NY 13221

Efcor, Inc.
East Farmingdale, NY 11735

Electroline Manufacturing Company
Cleveland, OH 44129

O-Z Gedney Company, A Unit of
General Signal Corporation
Teryville, CT 06786

Gries Dynacast Company
New Rochelle, NY 10802

The Halex Company
Division of Scott & Fetzer Company
Cleveland, OH 44146

ITT Weaver
St. Louis, MO 63114

Kellems Division
Harvey Hubbell, Incorporated
Stonington, CT 06378

Killark Electric Manufacturing Co.
St. Louis, MO 63115

Midland-Ross Corporation
Pittsburgh, PA 15230

Minerallac Electric Company
Addison, IL 50101

The M and W Electric Mfg. Company
East Palestine, OH 44413

Myers Electric Products, Inc.
Montebello, CA 90640

Neer Manufacturing Company, Inc.
Lexington, OH 44904

Pass & Seymour, Inc.
Syracuse, NY 13221

Producto Electric Corporation
Orangeburg, NY 10962

Raco, Inc., Sub. of
Harvey Hubbell, Inc.
South Bend, IN 46634

Red Dot Division
L. E. Mason Company
Boston, MA 02136

Regal Manufacturing Company
Division of Creftcon Industries
Industry, CA 91749

Robroy Industries, Inc.
Verona, PA 15147

Silvine, Inc.
Abington, PA 19001

Square D Company
Bell Electrical Products
Emmaus, PA 18049

Thepitt Manufacturing Company
Carnegie, PA 15106

Thomas and Betts Corporation
Raritan, NJ 08869

▲ Revised.

Copyright National Electrical Manufacturers Association
Provided by IHS under license with NEMA
No reproduction or networking permitted without license from IHS
Not for Resale