To: Holders of NEMA EW 8-1994
From: NEMA Communications Department
Date: July 1, 2004
Subject: Rescission of NEMA EW 8-1994

The NEMA Codes and Standard Committee has rescinded:

NEMA Standards Publication EW 8-1994
Recommendations for Components of Robotic and Automatic Welding Installations

Copyright National Electrical Manufacturers Association
Provided by IHS under license with NEMA
No reproduction or networking permitted without license from IHS
Not for Resale

NEMA EW*8 94 6470247 0506600 86T

ANSI/AWS D16.2-94
ANSI/NEMA EW 8
An American National Standard

Standard for Components of Robotic and Automatic Welding Installations

National Electrical Manufacturers Association

American Welding Society

Copyright National Electrical Manufacturers Association
Provided by IHS under license with NEMA
No reproduction or networking permitted without license from IHS
Not for Resale

NEMA EW*8 94 ■ 6470247 0506601 7T6 ■

Key Words — Robot components, performance requirements, wire feeders, wire dereelers, welding torches, welding interfaces, connector arrangement, connector pin functions

ANSI/AWS D16.2-94
ANSI/NEMA EW 8
An American National Standard

Approved by
American National Standards Institute
May 23, 1994

Standard for Components of Robotic and Automatic Welding Installations

Prepared by
AWS Committee on Robotic and Automatic Welding

Under the Direction of
The Technical Activities Committee

Approved by
AWS Board of Directors
NEMA Codes and Standards Committee

Abstract

ANSI/AWS/NEMA *Standard for Components of Robotic and Automatic Welding Installations*, provides performance recommendations for evaluating components of a typical robotic or automatic welding installation.

Emphasis is placed on the role of the welding interface. A pin arrangement and specific function for each location in a standardized 37-pin connector are proposed.

National Electrical Manufacturers Association
2101 L Street, N.W., Washington, D.C. 20037

American Welding Society
550 N.W. LeJeune Road, Miami, Florida 33126

Copyright National Electrical Manufacturers Association
Provided by IHS under license with NEMA
No reproduction or networking permitted without license from IHS

Not for Resale

Statement on Use of AWS Standards

All standards (codes, specifications, recommended practices, methods, classifications, and guides) of the American Welding Society are voluntary consensus standards that have been developed in accordance with the rules of the American National Standards Institute. When AWS standards are either incorporated in, or made part of, documents that are included in federal or state laws and regulations, or the regulations of other governmental bodies, their provisions carry the full legal authority of the statute. In such cases, any changes in those AWS standards must be approved by the governmental body having statutory jurisdiction before they can become a part of those laws and regulations. In all cases, these standards carry the full legal authority of the contract or other document that invokes the AWS standards. Where this contractual relationship exists, changes in or deviations from requirements of an AWS standard must be by agreement between the contracting parties.

International Standard Book Number: 0-87171-446-9

American Welding Society, 550 N.W. LeJeune Road, Miami, Florida 33126

© 1994 Jointly by the American Welding Society and the
National Electrical Manufacturers Association. All rights reserved
Printed in the United States of America

Note: The primary purpose of AWS is to serve and benefit its members. To this end, AWS provides a forum for the exchange, consideration, and discussion of ideas and proposals that are relevant to the welding industry and the consensus of which forms the basis for these standards. By providing such a forum, AWS does not assume any duties to which a user of these standards may be required to adhere. By publishing this standard, the American Welding Society does not insure anyone using the information it contains against any liability arising from that use. Publication of a standard by the American Welding Society does not carry with it any right to make, use, or sell any patented items. Users of the information in this standard should make an independent substantiating investigation of the validity of that information for their particular use and the patent status of any item referred to herein.

With regard to technical inquiries made concerning AWS standards, oral opinions on AWS standards may be rendered. However, such opinions represent only the personal opinions of the particular individuals giving them. These individuals do not speak on behalf of AWS, nor do these oral opinions constitute official or unofficial opinions or interpretations of AWS. In addition, oral opinions are informal and should not be used as a substitute for an official interpretation.

This standard is subject to revision at any time by the AWS Robotic and Automatic Welding Committee. It must be reviewed every five years and if not revised, it must be either reapproved or withdrawn. Comments (recommendations, additions, or deletions) and any pertinent data that may be of use in improving this standard are requested and should be addressed to AWS Headquarters. Such comments will receive careful consideration by the AWS Robotic and Automatic Welding Committee and the author of the comments will be informed of the Committee's response to the comments. Guests are invited to attend all meetings of the AWS Robotic and Automatic Welding Committee to express their comments verbally. Procedures for appeal of an adverse decision concerning all such comments are provided in the Rules of Operation of the Technical Activities Committee. A copy of these Rules can be obtained from the American Welding Society, 550 N.W. LeJeune Road, Miami, Florida 33126.

Copyright National Electrical Manufacturers Association
Provided by IHS under license with NEMA
No reproduction or networking permitted without license from IHS
Not for Resale

Personnel

AWS Committee on Robotic and Automatic Welding

V. L. Mangold, Jr., Chairman	KOHOL, Incorporated
J. S. Noruk, 1st Vice Chairman	A. O. Smith Automotive Products
W. S. Howes, 2nd Vice Chairman	NEMA
M. E. Kennebeck, Secretary	American Welding Society
C. T. Anderson	Motoman
D. E. Conklin	Edison Welding Institute
R. A. Eldridge	The ESAB Group
*R. C. Fernicola**	The ESAB Group
*J. F. Hinrichs**	A. O. Smith Automotive Products
W. E. Hoffman	The ESAB Group Incorporated
F. A. Lamantia	Panasonic Factory Automation
G. D. Malone	Battelle Memorial Institute
V. L. Mangold	Kohol, Incorporated
J. S. Noruk	A. O. Smith Automotive Products
H. F. Prah	Prah Engineering Company
*D. J. Rybicki**	Martin Marietta Manned Space Systems
J. W. Schlosser	Hughes Tool Company
*G. C. Shubert**	Inventive Solutions
*V. W. Soranno**	General Motors Corporation
D. A. Stanzel	Miller Electric Manufacturing Company
G. VandeKemp	Hobart Brothers Company
T. V. Via	Via Technologies
M. M. Weir	Panasonic Factory Automation

*Advisor

Copyright National Electrical Manufacturers Association
Provided by IHS under license with NEMA
No reproduction or networking permitted without license from IHS
Not for Resale

Foreword

(This Foreword is not a part of ANSI/NEMA/AWS D16.2-94, *Standard for Components of Robotic and Automatic Welding Installations*, but is included for information only.)

The AWS Committee on Robotic and Automatic Welding was organized in 1985 to provide a centralized source for the exchange of technical information between manufacturers, installers, and operators of robotic and automated equipment. In 1988, the Committee was expanded to include representation of the Arc Welding Section of the National Electrical Manufacturers Association (NEMA). The relationship was formalized in September 1989 when the NEMA Codes and Standards Committee approved formation of a joint AWS/NEMA Committee to prepare a series of documents on various phases of the installation, maintenance, and operations of robots for welding.

ANSI/AWS/NEMA D16.2-94 sets guidelines for evaluating the performance of individual components that make up a typical robotic installation. Emphasis is placed on the standardization of the welding interfaces.

NEMA standards are approved by the ANSI Canvass Method. Since AWS is an ANSI Accredited Standards Developer this document has been approved through the AWS system.

Comments and suggestions for the improvement of this standard are welcome. They should be sent to the Managing Director, Technical Services Division, American Welding Society, 550 N.W. LeJeune Road, Miami, Florida 33126.

Official interpretations of any of the technical requirements of this standard may be obtained by sending a request, in writing, to the Managing Director, Technical Services Division, American Welding Society. A formal reply will be issued after it has been reviewed by the appropriate personnel following established procedures.

Copyright National Electrical Manufacturers Association
Provided by IHS under license with NEMA
No reproduction or networking permitted without license from IHS
Not for Resale

Table of Contents

Page No.

Personnel iii
Foreword iv
List of Tables vi
List of Figures vi

1. Scope 1
2. Definitions 1
3. Arc Welding Power Sources 1
   3.1 Continuous Duty 1
   3.2 Remote Control 1
4. Arc Welding Torches and Accessories 1
   4.1 Torch Design Requirements 1
   4.2 Torch Holder Requirements 2
   4.3 Torch Accessories 3
5. Dereeling System 3
   5.1 Equipment 3
   5.2 Characteristics 3
6. Welding Interfaces 3
   6.1 General Requirements 3
   6.2 Input/Output Signal Requirements 4
7. Shielding Gas Delivery Systems 4
   7.1 Regulators and Flow Meters 4
   7.2 Fitted Hose Assemblies 5
8. Welding Electrode Feeding Equipment 5
   8.1 Service Conditions 5
   8.2 Rating and Performance 5
   8.3 Construction 5
   8.4 Installation and Operation 6
9. Welding Circuit 6
   9.1 Components 6
   9.2 Design 6
   9.3 Integrity 6
   9.4 Conductor Size 6
   9.5 Support Equipment Isolation 6
   9.6 Methods of Weld Circuit Completions (Workleads) 6
10. Communication Control Wiring 6
11. System Grounding 7
   11.1 Grounding Mechanics 7
   11.2 Grounding Identification 7

Annex A — Glossary 9

Copyright National Electrical Manufacturers Association
Provided by IHS under license with NEMA
No reproduction or networking permitted without license from IHS
Not for Resale

List of Tables

Table		Page No.
1	Connector Pin Assignments	4
2	Minimum Hose Assembly Breaking Strength	5

List of Figures

Figure		Page No.
1	Typical Robotic Arc Welding Arrangement	2
2	Pin Layout for a Standard 37-Pin Connector	3
3	Typical Robot Weld Circuit	7
4	Protective Earth (Ground)	7

Copyright National Electrical Manufacturers Association
Provided by IHS under license with NEMA
No reproduction or networking permitted without license from IHS
Not for Resale

Standard for Components of Robotic and Automatic Welding Installations

1. Scope

This document applies to the recommended design, integration, installation, and use of industrial welding robotic and automatic systems. This document applies only to the gas metal arc welding (GMAW) and flux cored arc welding (FCAW) processes. Subsequent revisions may address additional welding processes.

A robotic arc welding system consists of a manipulator, power source, arc welding torch and accessories, electrode feed system, dereeling system, shielding gas delivery system, welding circuit, shielding and communication control, and grounding system. There may be other accessories that are outside the scope of this document. A typical system is illustrated in Figure 1.

2. Definitions

Welding terms used in this document shall be interpreted in accordance with ANSI/AWS A3.0, *Standard Welding Terms and Definitions*,[1] NEMA EW-1, *Electric Arc Welding Power Sources*, and NEMA EW-3, *Semiautomatic Wire Feed Systems for Arc Welding Electrode Feeding Equipment*[2] except as supplemented by Annex A of this document.

3. Arc Welding Power Sources

This section outlines the basic construction and performance requirements for arc welding power sources in robotic and automatic arc welding installations. Arc welding power sources used in robotic and automatic welding installations shall be constructed and tested in accordance with NEMA EW-1 and International Electrotechnical Commission (IEC) 974-1, *Requirements for Arc Welding Equipment, Part 1: Welding Power Sources.*[3]

3.1 Continuous Duty. Arc welding power sources for robotic and automatic welding installations shall be rated for continuous duty. See Annex A for definition of continuous duty.

3.2 Remote Control. Arc welding power sources shall have remote control capabilities for interfacing requirements. Refer to section 6, Welding Interfaces.

4. Arc Welding Torches and Accessories

This section outlines the basic design and requirements for GMAW and FCAW torches used with robotic and automatic welding equipment.

4.1 Torch Design Requirements

4.1.1 Style. The welding torch size and its style or design should allow access to the weldment. The torch

1. Standard may be obtained from the American Welding Society, 550 N.W. LeJeune Road, Miami, Florida 33126.
2. Standard may be obtained from the NEMA Publication Distribution Center, c/o National Electrical Manufacturers Association, 2102 L St., Suite 300, Washington, D.C. 20037.
3. All International Electrotechnical Commission (IEC) documents are available from the American National Standards Institute, 11 West 42 Street, 13th Floor, New York, New York 10036.

Copyright National Electrical Manufacturers Association
Provided by IHS under license with NEMA
No reproduction or networking permitted without license from IHS
Not for Resale

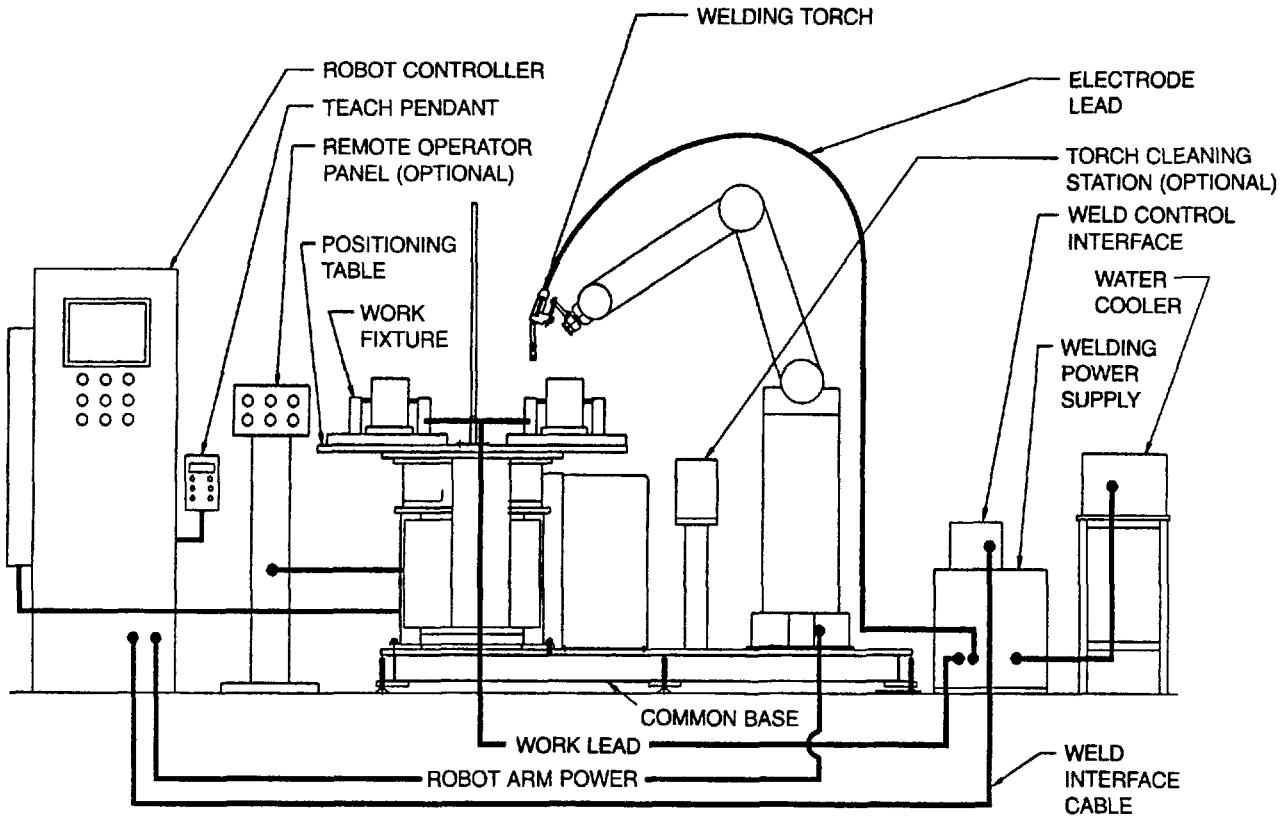

Figure 1—Typical Robotic Arc Welding Arrangement

may be either curved or straight and should provide proper access and position relative to the weld joint.

4.1.2 Weight. The weight of the welding torch and mounting components shall not exceed the design limit as specified by the manufacturer for the welding manipulator.

4.1.3 Insulation. The exposed surfaces of the welding torch shall be electrically isolated from the welding circuit. Such surfaces include the gas cup, torch body, and any other exposed surface not intended to carry welding current.

4.1.4 Mounting. Provisions for mounting the torch shall be such that the tool center point (TCP) does not deviate from the system repeatability requirements.

4.1.5 Utilities. Utilities consist of shielding gas, coolant, current, and other commodities required for the process. All utility connections should be designed to aid proper installation (for example color coding, labeling, or variation of fitting size).

Cables and hoses shall be of adequate length and flexibility so as not to restrict the movement of the manipulator or the supply of the utilities.

4.1.6 Current Rating. All torches shall meet NEMA Standard EW-3, *Semiautomatic Wire Feed Systems for Arc Welding Electrode Feeding Equipment.* Torch specifications are typically based on 100% CO_2 gas. For gases other than 100% CO_2, the current rating shall be rated according to manufacturer's specifications to meet continuous duty requirements.

4.1.7 Repeatability. Torches shall be designed so maintenance, including part replacement, minimizes the change of the electrode position with respect to the manipulator tool center point (TCP).

4.2 Torch Holder Requirements

4.2.1 Mounting to Manipulator. The torch holder shall have the proper mounting pattern or adapters for secure mounting of the torch holder to the manipulator.

4.2.2 Torch Attachment to Holder

4.2.2.1 The torch holder shall provide electrical isolation between the torch and the manipulator end effector.

4.2.2.2 The torch holder shall provide for alignment of the torch to the tool center point (TCP).

Copyright National Electrical Manufacturers Association
Provided by IHS under license with NEMA
No reproduction or networking permitted without license from IHS
Not for Resale

4.2.2.3 The torch holder shall be mechanically rigid to withstand collision.

4.2.2.4 The torch holder shall be able to accept the torch specified for the welding application.

4.2.3 Collision Sensing Device

4.2.3.1 When collision from any direction occurs, the torch holder shall provide an electrical signal to the system controller.

4.2.3.2 The collision sensing device shall provide a means of repositioning the electrode tip to the TCP.

4.3 Torch Accessories. Torch accessories are devices that may be beneficial in robotic or automatic welding cells. Typical devices may include cleaning stations, water coolers,[4] alignment tools, and wire cutters.

4.3.1 Cleaning Stations

4.3.1.1 A cleaning station is an accessory that removes spatter from the torch. Torches should be cleaned periodically to prevent excessive accumulation of spatter that affects process performance.

4.3.1.2 Cleaning stations, when employed, shall not adversely affect the performance of the torch, wire, or system repeatability.

4.3.2 Water Cooler

4.3.2.1 A water cooler is an accessory sized to maintain the welding torch at or below its maximum operating temperature as specified by the torch manufacturer.

4.3.2.2 When coolant flow is inadequate, a sensing device shall provide an electrical signal to the system controller.

4.3.3 Alignment Tools. Alignment tools are devices used to establish the TCP. These devices may be contact or noncontact type.

4.3.4 Welding Wire Cutters. Welding wire cutters are devices used to establish uniform wire extension and profile.

5. Dereeling System

5.1 Equipment. This section outlines the basic requirements for conveying welding wire from the wire package (i.e., spools, payoff packs) of any size to the entrance of the wire feeder mechanism.

5.2 Characteristics

5.2.1 The pulling force on the welding wire shall not exceed 10 pounds at the entrance to the wire feeder.

5.2.2 A wire control system shall limit filler metal leaving the package to that required to prevent entanglement when the wire feeder is stopped. Entanglement shall not occur regardless of the weight of the filler metal package or the wire feed speed.

5.2.3 The dereeler shall be designed and installed to provide for easy and safe loading of the wire package.

5.2.4 All dereeler components in direct contact with the welding wire shall be isolated from the welding ground with a minimum resistance of 1 megaohm at 500 Vdc.

6. Welding Interfaces

This section outlines the basic requirements for the interface between the robotic/automatic controller and the welding equipment.

6.1 General Requirements. The interface shall be provided by the standard connector, MS3102A-28-215. The pin layout is shown in Figure 2 and the connector pin assignments are shown in Table 1 and in parentheses in 6.2 below. The interface shall provide electrical isolation between the controller and the welding equipment as

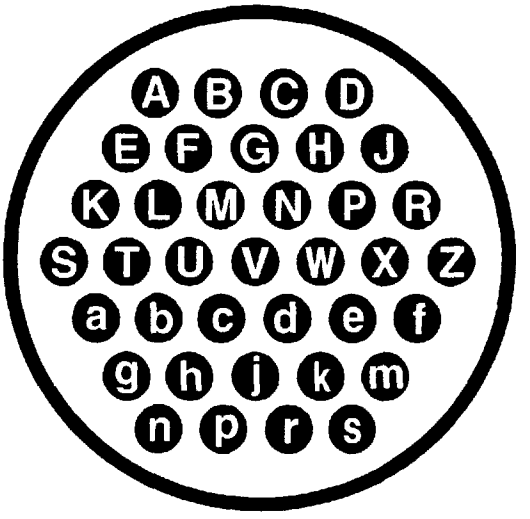

Figure 2—Pin Layout for a Standard 37-Pin Connector (Ref. MS3102A-28-215)

4. *Water cooler* is a common industrial term. The coolers consist of a reservoir and may contain a radiator. Coolants other than water may also be used.

Copyright National Electrical Manufacturers Association
Provided by IHS under license with NEMA
No reproduction or networking permitted without license from IHS
Not for Resale

Table 1
Connector Pin Assignments

Pin Location	Pin Function
A	WFS Analog Output (0–10v)
B	WFS Analog Output (Common)
C	Weld Voltage Analog Output (0–10v)
D	Weld Voltage Analog Output (Common)
E	Current Analog Feedback (0–10v)
F	Current Analog Feedback (Common)
G	Voltage Analog Feedback (0–10v)
H	Voltage Analog Feedback (Common)
J	Spare
K	Spare
L	Spare
M	Output Enable (Dry Contact)
N	Output Enable (Dry Contact)
P	Output Common
R	Arc On
S	Arc Voltage On
T	Wire Feed Forward - Possible Jog
U	Wire Feed Reverse - Possible Jog
V	Spare
W	Spare
X	Gas On
Z	Check Electrode Touch
a	Spare
b	Spare
c	Input Common
d	Arc (Sensing) Established
e	Electrode Touched
f	Arc Failure
g	Welding Equipment Ready (Panel On)
h	Spare
j	Spare
k	24v DC Power Source (+)
m	Power Source Common
n	E-Stop (+)Terminal
p	E-Stop Common
t	Spare
s	Spare

well as the necessary circuitry for converting the controller's input/output signals to a form usable by the welding equipment.

6.2 Input/Output Signal Requirements[5]

6.2.1 Analog Signals

6.2.1.1 Analog output(s) shall provide for a 0 to +10 volt dc control signal (Vdc). There shall be four pins reserved for analog outputs for use as follows:

(C, D) Weld voltage reference
(A, B) Wire feed speed reference

5. For the purposes of this document, the robot or automatic controllers are considered as the source of output signals and the receiver of input signals.

6.2.1.2 Analog inputs shall provide for a 0 to +10 volts feedback-signal (Vdc). There shall be four pins reserved for analog inputs for use as follows:

(G, H) Weld voltage feedback
(E, F) Weld current feedback

6.2.2 Discrete Outputs

6.2.2.1 Discrete outputs shall provide 24 volt signals (Vdc).

6.2.2.2 There shall be nine pins reserved for discrete outputs for use as follows:

(M, N) Output enable (Dry Contact)
(P) Output common
(R) Arc on
(S) Arc voltage on
(T) Wire feed forward — possible jog
(U) Wire feed reverse — possible jog
(X) Gas on
(Z) Electrode touch check

6.2.3 Discrete Inputs

6.2.3.1 Discrete inputs shall be 24 volts (Vdc)

6.2.3.2 There shall be five pins reserved for discrete inputs as follows:

(c) Input common
(d) Arc established
(e) Electrode touched
(f) Arc failure
(g) Welding equipment status

6.2.4 Other. There shall be fifteen pins reserved for other miscellaneous input/output functions as follows:

(1 pin) Electrical Shield
(k,) 24 Vdc power source (+)
(m) Power source common
(n) Emergency stop terminal
(p) Emergency stop common
(s) Electrical Shield
(j, k, l) Spares
(v, w) Spares
(a, b) Spares
(h, j) Spares
(t) Spare

7. Shielding Gas Delivery Systems

Gas delivery systems should consist of, but are not limited to, regulators, flow meters, fitted hose, hose connectors, gas mixers, and solenoid valves.

7.1 Regulators and Flowmeters

7.1.1 Regulators or flowmeters shall be capable of supplying the specified shielding gas in a continuously

Copyright National Electrical Manufacturers Association
Provided by IHS under license with NEMA
No reproduction or networking permitted without license from IHS
Not for Resale

adjustable range of 10 cubic feet per hour (CFH) (5 L/min.) to the maximum required for the application for each welding torch.

7.1.2 Gas flow shall be indicated by a flowmeter, with a minimum accuracy of ±10% of full scale reading.

7.1.3 Gas flow devices shall be capable of supplying the required gas flow on a continuous duty basis.

7.1.4 Outlet pressure of the gas flow devices shall not exceed 100 psi (690 kPa).

7.1.5 Outlet connections shall conform to the requirements of Compressed Gas Association (CGA)[6] Class 032, as specified in pamphlet E-1, *Standard Connections for Regulator Outlets, Torches and Fitted Hose for Welding and Cutting Equipment.*

7.2 Fitted Hose Assemblies

7.2.1 Hose Types, Grades, and Sizes. The types, grades and sizes of nonconductive rubber hose shall be in accordance with current RMA-CGA IP7, *Specification for Rubber Welding Hose.*[7] Grade R has a non oil-resistant cover, and it is not recommended for use in areas where oil or grease may be encountered. All rubber hoses should be protected from ultraviolet radiation from the welding arc.

7.2.2 Pressure Capabilities. Fitted hose assemblies shall be designed for a minimum operating pressure of 100 psi (690 kPa).

7.2.3 Physical Strength. The minimum pull strength for axial and right-angle pulling shall be in accordance with pamphlet E1 of the Compressed Gas Association (see Table 2). Leakage, breakage, puncture, and hose separation constitute failure.

7.2.4 All hose connections to and from the valve shall conform to the requirements of CGA Class 032.

8. Welding Electrode Feeding Equipment

This section details requirements for equipment to feed continuous welding electrodes.

8.1 Service Conditions

8.1.1 Should the user anticipate service conditions classified as unusual in accordance with NEMA EW-3, *Semiautomatic Wire Feed Systems for Arc Welding*, the user should contact the equipment manufacturer for further recommendations.

8.1.2 Welding electrode feeding equipment shall be installed and operated in accordance with the National Electrical Code, federal, state, and local codes as applicable, the manufacturers' specifications, and applicable safety specifications, including ANSI Z49.1, *Safety in Welding and Cutting.*

8.2 Rating and Performance

8.2.1 Duty Cycle. Welding electrode feeding equipment for robotic and automatic welding shall be capable of operating at continuous duty. The continuous duty cycle rating shall be determined by conducting performance rating tests as described in 8.3.2.

8.2.2 Rating and Performance Tests. Rating and performance tests shall be conducted as described in the applicable section of NEMA Standard EW-3, *Semiautomatic Wire Feed Systems for Arc Welding Electrode Feeding Equipment.*

8.2.2.1 Welding electrode feeding equipment shall be capable of withstanding continuous cycling of 4 seconds on and 2 seconds off for a minimum of 10 consecutive minutes.

8.2.2.2 The temperature of the internal components and external surfaces shall not exceed those specified in the applicable section of NEMA EW-3.

8.3 Construction

8.3.1 General Considerations. Welding electrode feeding equipment may be housed within the welding power source, may be a single unit, or may be of modular construction to allow the controls to be mounted separately from the wire drive motor assembly. The equipment may have provisions for mounting a coil or spool of welding electrode or may pull the electrode from a separate source such as a dereeler or bulk package.

Table 2
Minimum Hose Assembly Breaking Strength

Nominal I.D.		Axial Pull		Angle Pull	
in.	(mm)	lb	(kg)	lb	(kg)
3/16	(5)	100	(45)	50	(23)
1/4	(6.3)	300	(136)	150	(68)
5/16	(8)	350	(136)	200	(90)
3/8	(10)	350	(158)	200	(90)

Reference: CGA Pamphlet E1, Standard Connections for Regulator Outlets, Torches and Fitted Hose for Welding and Cutting Equipment.

6. Standards can be obtained from the Compressed Gas Association, 1725 Jeff Davis Highway, Suite 1004, Arlington, Virginia 22202-4102.
7. Standard can be obtained from the Rubber Manufacturers Association, 1400 K Street, N.W., Washington, D.C. 20005.

Copyright National Electrical Manufacturers Association
Provided by IHS under license with NEMA
No reproduction or networking permitted without license from IHS
Not for Resale

8.3.2 Mechanical Construction

8.3.2.1 The design, construction, and performance of the wire feeder frame, case, cabinet, or enclosure shall conform to the requirements of the applicable section of NEMA EW-3.

8.3.2.2 Motors for feeding of welding electrode wires shall be designed with sufficient power to provide the force necessary to pull the welding electrode from the coil, spool, package or from dereeling equipment, and to deliver the electrode to the welding torch at the rated speed (see section 5).

8.3.2.3 Wire drive roll assemblies shall be designed to drive the welding electrode in a smooth and uniform manner at the rated speed. The number and design of drive rolls shall be suitable for the size and type of electrode. Auxiliary motors, wire straighteners, and drive roll assemblies may be required for certain applications.

8.3.2.4 The conduits for guiding and transmitting welding electrode shall be designed specifically for the following:

(1) Electrode size and type

(2) To provide low wear and drag between the electrode wire and conduit

(3) To provide electrical insulation between the electrode and personnel or equipment

8.3.3 Electrical Construction. Electrical components, insulation, wiring, cables, and connections shall be designed to the requirements of the electrical construction section of NEMA EW-3.

8.3.4 Remote Control. Welding electrode feeding equipment shall have remote control capability and shall be suitable for interfacing to the robot control, automatic welding control, or power source.

8.3.5 Input Voltage Rating. When the welding electrode feeding equipment is not contained within the enclosure of the welding power source, the input voltage to the equipment shall not exceed 120 Vac nominal.

8.4 Installation and Operation

8.4.1 Recommended Mounting of Equipment. Because of the wide variety of configurations and applications for robotic and automatic welding installations, it is not possible to define rigid rules for the use of welding electrode feeding equipment. However, the following points are provided to guide the user.

8.4.1.1 The electrode drive roll assembly should be located as close as practical to the welding torch. Auxiliary drive assemblies or push-pull feeding systems may be required for applications that involve large wire packages, small diameter wires, long cable runs, or difficult to feed wires.

8.4.1.2 The welding electrode path from the dereeling equipment, spools, or coils to the wire feeder and from the feeder to the welding torch should be as short as practical. Conduits used to guide the electrode should be mounted and supported so that there are no sharp bends.

8.4.1.3 Wire guide conduits and other components and assemblies that are connected to, or may come in contact with, the welding power circuit shall be electrically insulated to avoid injury to personnel or equipment.

9. Welding Circuit

This section outlines the function of the typical components used in the welding circuit.

9.1 Components. Typical components of the welding circuit consist of the electrode leads, workleads, the output terminals of the power source, and the power source itself, Figure 3.

9.2 Design. The welding circuit should be designed to reduce the effect of thermal, electric, and magnetic interference.

9.3 Integrity. The weld circuit shall meet the requirements of local, state, and federal codes. Electrical connections in the weld circuit shall be made with clean bright metal surfaces.

9.4 Conductor Size. Welding leads should be maintained as short as practical. The conductor size shall be in accordance with the local, state, and federal codes and the power source manufacturer's recommendations.

9.5 Support Equipment Isolation

9.5.1 All components utilized in the arc welding system that are not physically part of the weld circuit path should be electrically isolated from the circuit.

9.5.2 Welding positioners, tables, and other peripheral devices should not be an intentional part of the welding circuit.

9.6 Methods of Weld Circuit Completions (Workleads)

9.6.1 The worklead should be fastened, using compatible metals, as close as practical to the point of arc initiation.

9.6.2 No connection shall cause interruption to the continuity of the worklead path.

10. Communication Control Wiring

10.1 All communication and control lines shall be designed in accordance with local, state, and federal codes where applicable.

Copyright National Electrical Manufacturers Association
Provided by IHS under license with NEMA
No reproduction or networking permitted without license from IHS
Not for Resale

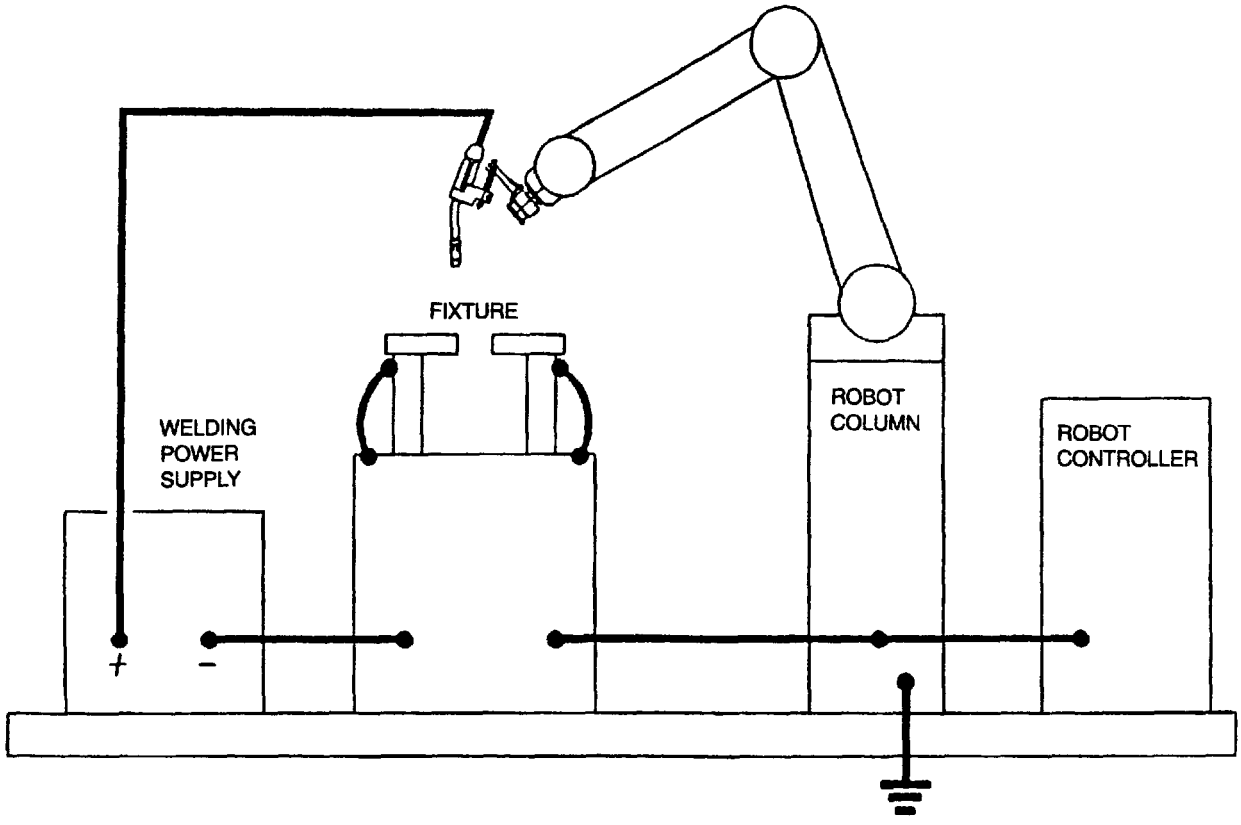

Figure 3—Typical Robot Weld Circuit

10.2 Low voltage discrete and analog signal lines should be segregated from ac discrete signal lines to prevent interference.

11. System Grounding

System grounding shall be required to avoid the danger of electric shock from an electrical fault in any of the system components.

11.1 Grounding Mechanics. All exposed non-current carrying conductive parts, which might become energized under normal use and handling, shall have a metal-to-metal contact and shall be bonded to a common ground.

11.1.1 The system ground connection shall be utilized for grounding purposes only.

11.1.2 The system ground connector shall be sized in accordance with applicable federal, state, and local codes.

11.1.3 The system ground connection shall be located as noted in Figure 3.

11.1.4 The system ground shall be attached only by mechanical means. Solder alone shall not be used as a means for ground connections.

11.2 Ground Identification. When the grounding means is an insulated lead, it shall have a green colored surface with or without one or more yellow stripes. In all other cases, the grounding means shall be identified by green coloring, by a legible marking with the green coloring, or by a legible marking with the symbols as shown in Figure 4, or alternatively with the letter(s) G, GR, GRD, GND, or GROUND.

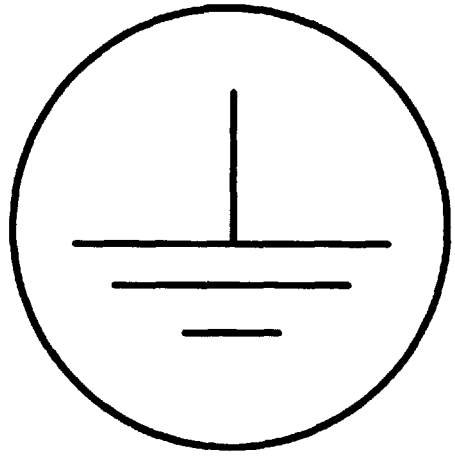

Figure 4—Protective Earth (Ground) (Source: IEC 417;5019)

Copyright National Electrical Manufacturers Association
Provided by IHS under license with NEMA
No reproduction or networking permitted without license from IHS
Not for Resale

Annex A
Glossary

(This Annex is not a part of ANSI/NEMA/AWS D16.2-94, *Standard for Components of Robotic and Automatic Welding Installations*, but is offered for information only.)

analog input. A 0–10 Volt dc reference signal from the welding equipment to the robot controller.

analog output. A 0–10 volt command reference signal from the robot controller to the weld equipment.

arc established. A discrete input signal that indicates a welding arc is present.

arc on. A discrete output signal that initiates the welding process.

auxiliary power supply. Either alternating or direct current provided by the arc-welding power source that supplies power to the welding site.

continuous duty. A power source rated for continuous duty shall be capable of operating 100 percent of the time without interruption and without exceeding the maximum temperature criteria of the insulation and components within the power source. In all cases, the required load shall not exceed the weld power source rating for continuous duty.

discrete input. An on-off signal from the weld equipment to the robot to indicate the status of the function being monitored.

discrete output. An on-off command from the robot to the weld equipment used to control peripheral components.

electrical shielding. A means of redirecting wandering and random electrical noise and interference to provide integrity to lines of communications.

electrode lead. The welding lead between one of the welding power terminals of the arc welding power source and the welding electrode.

electrode touch check. Discrete output signal to initiate continuity of weld wire to work.

electrode touch. Discrete input signal which indicates continuity between the welding wire and the work.

E-stop. Overriding output signal from the robot to the welding equipment that terminates all output on command.

gas on. Discrete output signal used to turn on the gas solenoid, activate auxiliary equipment, or both.

load current. The amperage flowing in the welding circuit when a load is applied to the welding terminals.

load voltage. The voltage between the welding terminals of the arc welding power supply when a load current is flowing in the welding circuit.

output enable. Discrete output signal for enabling all automatically controlled discrete output signals.

power source output on (voltage on). Discrete output signal that enables, or maintains, the power output (power voltage) source.

rated load voltage. The load voltage at rated output.

rated output. The rated output of an arc welding power supply shall consist of a designated limit of output, or capacity, expressed as a rated load voltage, rated load current, and rated load duty cycle when the power supply is operated at rated input voltage(s) and rated frequency(ies) or at rated speed.

weld equipment status. Discrete input signal to monitor readiness of the welding equipment.

welding circuit. Consists of all attachments connected to the welding terminals of the arc welding power supply.

Copyright National Electrical Manufacturers Association
Provided by IHS under license with NEMA
No reproduction or networking permitted without license from IHS
Not for Resale

NEMA EW*8 94 ■ 6470247 0506615 290 ■

welding leads. Conduct the welding power and, when provided, high frequency energy from the welding terminals to the welding arc.

welding terminals. Those terminals of an arc welding power supply which furnish welding power and, when provided, high-frequency energy for the welding arc.

welding torch. An apparatus that directs the placement of filler metal supplied as a continuous electrode and provides the means for supplying welding current and shielding gas as necessary.

wire feed forward (robot controlled). Discrete output signal from the robot to initiate forward wire feed at a rate specified by the analog signal for the wire feed speed.

weld voltage reference. A 0–10 volt output signal that controls the output voltage of the weld power supply.

wire feed reverse (robot controlled). Discrete output signal from the robot to initiate reverse wire feed at a rate specified by the analog signal for the wire feed speed.

wire feed speed reference line. A 0–10 volt output signal that controls the electrode wire feed rate.

work lead. The welding lead between one of the welding terminals of the arc welding power supply and the work.

Copyright National Electrical Manufacturers Association
Provided by IHS under license with NEMA
No reproduction or networking permitted without license from IHS
Not for Resale