STANDARDS PUBLICATION/NO. EW 3-1983

nema

Semiautomatic Wire Feed Systems for Arc Welding

NEMA

NATIONAL ELECTRICAL MANUFACTURERS ASSOCIATION ■ 2101 L STREET, N.W., WASHINGTON, D.C. 20037

Copyright National Electrical Manufacturers Association
Provided by IHS under license with NEMA
No reproduction or networking permitted without license from IHS
Not for Resale

TABLE OF CONTENTS

		Page
	FOREWORD	i
	SCOPE	i
Section 1	DEFINITIONS	1
Section 2	SERVICE CONDITIONS	
	General	4
	Usual Service Conditions	4
	Unusual Service Conditions	4
Section 3	MECHANICAL CONSTRUCTION REQUIREMENTS	
	Frames and Enclosures—General Strength Considerations	5
	Enclosure of Live Parts	5
	Openings in Enclosures	5
	Enclosure Construction	6
	Rotating Parts	6
	Filler Wire Supply	6
	Corrosion Protection	6
	Service Line Hoses	6
	Gun Assembly	6
	Water Cooling	7
	Drop Testing	7
Section 4	ELECTRICAL CONSTRUCTION REQUIREMENTS	
	Service Line Cords, Cables, and Connections	8
	Wire Feed Unit and Control	8
	Gun Assembly and Gun Cable Assembly	9
	High-Potential Test and Insulation Resistance	9
Section 5	RATING AND PERFORMANCE	
	Rating of Wire Feed System	11
	Performance	11
	Temperature Testing	11
	Other Performance Data	12
Section 6	MARKINGS	
	Wire Feeder Nameplate	13
	Gun Assembly and Gun Cable Assembly Nameplate	13

© 1983 by the National Electrical Manufacturers Association

Copyright National Electrical Manufacturers Association
Provided by IHS under license with NEMA
No reproduction or networking permitted without license from IHS
Not for Resale

NEMA Standards Publication EW 3-1983 (R1989, R1995)

Semiautomatic Wire Feed Systems for Arc Welding

Published by:

National Electrical Manufacturers Association
1300 North 17th Street
Rosslyn, VA 22209

© Copyright 1999 by the National Electrical Manufacturers Association. All rights including translation into other languages, reserved under the Universal Copyright Convention, the Berne Convention for the Protection of Literary and Artistic Works, and the International and Pan American Copyright Conventions.

Copyright National Electrical Manufacturers Association
Provided by IHS under license with NEMA
No reproduction or networking permitted without license from IHS

Not for Resale

Foreword

This standards publication was developed by the NEMA Arc Welding Section and it includes requirements for construction, ratings, and performance applying to certain wire feed systems used in semiautomatic arc welding processes. They are based upon sound engineering principles, research, and records of tests and field experience. Also involved is an appreciation of the problems of manufacture, installation, and use derived from consultation with and information obtained from manufacturers and users, and others having specialized experience.

Two 90-day public reviews for comments were solicited through the American Welding Society (AWS) *Welding Journal* and the NEMA Arc Welding Section canvass list, to ensure that the views of interested parties in the public and private sector have been given full consideration. Their comments and suggestions, prior to final NEMA approval, provided vital user and general interest input, and resulted in a number of substantive changes being made in this publication.

These standards will be reviewed periodically by the Arc Welding Section of NEMA for any changes which may be necessary to keep them up to date. As future major revisions to this publication are proposed, it is intended to offer the same or similar individuals a further opportunity to participate in the development of this publication. Proposed or recommended revisions should be submitted to:

Manager, Engineering Department
National Electrical Manufacturers Association
2101 L Street, N.W.
Washington, D.C. 20037

Scope

This standards publication applies to wire feed systems used in semiautomatic arc welding processes such as gas-metal arc welding, flux-cored arc welding with gas, flux-cored arc welding without gas, submerged arc welding, and gas-tungsten arc welding with the addition of filler wire.

This publication does not apply to automatic arc welding systems or to gas-tungsten arc welding apparatus without the addition of filler wire.

Copyright National Electrical Manufacturers Association
Provided by IHS under license with NEMA
No reproduction or networking permitted without license from IHS
Not for Resale

Section 1
DEFINITIONS

AUTOMATIC ARC WELDING

Welding with equipment which performs the entire welding operation without constant observation and adjustment of the controls by an operator. The equipment may or may not load and unload the work.

NEMA Standard 11-6-1975.

CONTACT TUBE

A device which transfers welding current to a continuous electrode.

NEMA Standard 1-11-1983.

DRIVE ROLLS

Rolls which contact the filler wire and transfer the mechanical power from the motor/gear portion of the wire-feed unit to the filler wire to feed the wire from the filler wire supply to the arc.

NEMA Standard 11-6-1975.

DUTY CYCLE

The ratio (expressed as a percent) of arc time to total time. For the purpose of these standards, the time period of one complete cycle shall be 10 minutes.

NEMA Standard 11-6-1975.

ELECTRODE

A component of the welding circuit in the form of continuous filler wire through which the welding current is conducted. It is melted by the arc and deposited in the weld seam.

NEMA Standard 11-6-1975.

FILLER METAL

The metal to be added in making a weld.

NEMA Standard 11-6-1975.

FILLER WIRE

Filler metal in wire form.

NEMA Standard 1-11-1983.

FILLER WIRE CONDUIT

A flexible tubular member which insulates and/or guides the filler wire.

NEMA Standard 11-6-1975.

FILLER WIRE SUPPLY

The filler wire which is stored for continuous pay-out to the wire feed unit. The wire feed unit may have integral provisions for the filler wire supply, or the filler wire supply may be remote from the wire feed unit with continuous pay-out achieved by means of filler wire conduit, pulleys, rollers, etc.

NEMA Standard 11-6-1975.

FLUX CORED ARC WELDING (FCAW)

An arc welding process wherein coalescence is produced by heating with an arc between a continuous filler metal (consumable) electrode and the work. Shielding is obtained from a flux contained within the tubular electrode. Additional shielding may or may not be obtained from an externally supplied gas or gas mixture.

NEMA Standard 1-11-1983.

GAS METAL ARC WELDING (GMAW)

An arc welding process which produces coalescence of metals by heating them with an arc between a continuous filler metal (consumable) electrode and the work. Shielding is obtained entirely from an externally supplied gas or gas mixture. Some methods of this process are called MIG or CO_2 welding (nonpreferred terms).

NEMA Standard 1-11-1983.

GUN ASSEMBLY

A hand-held manipulated device which guides the filler wire into the arc. It may include provisions for the transfer of welding current to the electrode, shielding, fume removal, filler wire supply, and control means for the welding process.

NEMA Standard 11-6-1975.

GUN CABLE ASSEMBLY

The flexible supply lines necessary for the operation of the gun assembly. It includes a cable which carries welding current and may also include a filler wire conduit means for conveying shielding medium, cooling medium, means for fume removal, control wires, and line for nonelectric drives.

NEMA Standard 1-11-1983.

GUN SWITCH

The part of the gun assembly that is used to start, stop, and/or control the wire feed system.

NEMA System 11-6-1975.

Copyright National Electrical Manufacturers Association
Provided by IHS under license with NEMA
No reproduction or networking permitted without license from IHS
Not for Resale

INPUT CONTROL CURRENT

The input current required to operate the wire feed system. NEMA Standard 1-11-1983.

INPUT CONTROL FREQUENCY

The nominal frequency or frequencies of the input control voltage. NEMA Standard 1-11-1983.

INPUT CONTROL POWER

The input power required to operate the wire feed system. NEMA Standard 1-11-1983.

INPUT CONTROL VOLTAGE

The input voltage required from an external source to operate the wire feed system. NEMA Standard 1-11-1983.

LIVE PARTS

Any parts which can be expected to be electrically energized during normal operation. NEMA Standard 11-6-1975.

MANUFACTURER

The company whose name is shown on the nameplate. NEMA Standard 11-6-1975.

MAXIMUM LOAD

The maximum mechanical load at the various rated wire feed speeds over the operating ranges of the equipment at which the wire feed unit and wire feed control can operate at the rated duty cycle without causing the rated temperature rise of any component to be exceeded. NEMA Standard 11-6-1975.

NOZZLE

A device which directs shielding medium to or removes fumes from the welding arc. NEMA Standard 1-11-1983.

RATED CURRENT

The current at which a device can operate at the rated duty cycle without exceeding its rated temperature. NEMA Standard 11-6-1975.

RATED SPEED RANGE

The wire feed speed range in inches per minute or millimeters per second, or both, listed by the manufacturer for each rated size of filler wire. NEMA Standard 11-6-1975.

SEMIAUTOMATIC ARC WELDING

Arc welding with equipment which controls only the feeding of the filler wire. The manipulation of the welding gun assembly is manually controlled. NEMA Standard 11-6-1975.

SERVICE LINES

The lines between the source of power equipment or other equipment, or both, and the wire feed control or unit. These lines may consist of:

1. A welding cable to supply the welding power to the system.
2. Flexible cord(s) to supply input control power and to interconnect control circuits, such as that for the welding contactor, as required.
3. Hoses to supply shielding medium, cooling or fume removal.
4. Hoses, lines, or conduits required for non-electric power or control.

NEMA Standard 1-11-1983.

SHIELDING MEDIUM

Gas, flux, or other material which is used to shield the arc and molten weld metal from the atmosphere. NEMA Standard 1-11-1983.

SUBMERGED ARC WELDING (SAW)

An arc welding process which produces coalescence of metal by heating them with an arc or arcs between a bare metal electrode or electrodes and the work. The arc and molten metal are shielded by a blanket of granular, fusible material on the work. NEMA Standard 1-11-1983.

WELDING CURRENT

The current which is in the welding circuit during the making of a weld. NEMA Standard 11-6-1975.

WELDING POWER CIRCUIT

Any part of the system which is electrically energized by the welding power of the welding power source. NEMA Standard 11-6-1975.

WELDING POWER SOURCE

A source of welding current and voltage for arc welding. NEMA Standard 11-6-1975.

Copyright National Electrical Manufacturers Association
Provided by IHS under license with NEMA
No reproduction or networking permitted without license from IHS
Not for Resale

WIRE FEED CONTROL

The electrical apparatus or mechanical apparatus, or both, that control(s) the wire feed unit, the sequence of operations and the services as required.

NEMA Standard 11-6-1975.

WIRE FEED SYSTEMS

A system which applies a continuous filler wire to an arc or weld zone. The system usually includes the following elements: a gun assembly, gun cable assembly, wire feed unit, wire feed control, filler wire supply, and service line.

NEMA Standard 11-6-1975.

WIRE FEED UNIT

The apparatus that converts control power to mechanical power and transfers it to the filler wire. It usually includes a motor, speed reducing means, drive rolls, and filler wire guides. It may also include the wire feed control and filler wire supply.

NEMA Standard 11-6-1975.

Copyright National Electrical Manufacturers Association
Provided by IHS under license with NEMA
No reproduction or networking permitted without license from IHS
Not for Resale

Section 2
SERVICE CONDITIONS

2.1 GENERAL

Service conditions, other than those specified as usual, may have a detrimental effect on the welding apparatus. Such an effect depends upon the degree of departure from usual operating conditions and the severity of the environment to which the apparatus is exposed. Of principal concern are unusual service conditions which might cause abnormal deterioration of the insulation system, electrical breakdown or mechanical wear, resulting in premature failure.

Although past experience of the user may often be the best guide, the manufacturer of the welding equipment should be consulted for further information regarding any unusual service conditions which may increase the mechanical or thermal stresses on the equipment and, as a result, increase the chances for failure and possible hazard.

Authorized Engineering Information 11-6-1975.

2.2 USUAL SERVICE CONDITIONS

Equipment conforming to these standards shall be capable of operating in accordance with its rating under the following conditions:

1. Where the ambient temperature is in the range of 0 °C to 40 °C.
2. Where the altitude is between sea level and 3300 feet (1000 meters).
3. When exposed to gases and dust produced by the welding arc.
4. When the input control voltage varies within ± 10 percent of input control voltage rating of the equipment.
5. When the input control voltage or frequency varies within ± 10 percent of the input control voltage or frequency rating of the equipment.

NEMA Standard 1-11-1983.

UNUSUAL SERVICE CONDITIONS

The manufacturer should be consulted if any unusual service conditions exist. Among such conditions are exposure to:

1. Combustible or conducting dusts.
2. Chemical fumes or flammable gases.
3. Rain, steam, or oil vapor.
4. Vermin infestation or atmosphere conducive to the growth of fungus.
5. Very dirty, corrosive, explosive, or abrasive environments.
6. High radiant or conducted heat.
7. Abnormal shock or vibration.
8. Nuclear radiation.
9. Severe weather conditions.
10. Seacoast and ship board conditions.
11. Continuous average relative humidity above 90 percent or below 10 percent.
12. Altitudes in excess of 3300 feet (1000 meters).

Authorized Engineering Information 1-11-1983.

Copyright National Electrical Manufacturers Association
Provided by IHS under license with NEMA
No reproduction or networking permitted without license from IHS
Not for Resale

Section 3
MECHANICAL CONSTRUCTION REQUIREMENTS

3.1 FRAMES AND ENCLOSURES—GENERAL STRENGTH CONSIDERATIONS

The frames and enclosures of a wire feed system and its elements shall be so formed and assembled that they will have the strength and rigidity necessary to withstand the normal service to which they are likely to be subjected without increasing the fire, shock, or other hazard of the system.

NEMA Standard 1-11-1983.

3.2 ENCLOSURE OF LIVE PARTS

Electrical parts shall be so enclosed or located as to provide suitable protection against accidental contact with uninsulated live parts.

NEMA Standard 11-6-1975.

3.3 OPENINGS IN ENCLOSURES

The suitability of an opening in the enclosure shall be determined in accordance with 3.3.1 and 3.3.2.

Any part of the outer enclosure that is intended to be opened or removed, without the use of tools, by the user of the equipment (to permit the attachment of accessories, to allow access to means for making operating adjustments, or for other reasons) shall be opened or removed prior to examination. The components of the welding power circuit on parts of the system that are not normally held by hand shall not be considered during this examination.

The components of the welding power circuit on the gun assembly or other parts that are normally held by hand shall be enclosed so as to comply with 3.3.1, except that these enclosures may be removable without the use of a tool. The contact tube area of the gun assembly shall not be considered during this examination.

3.3.1 Gun Assembly

An opening in the handle or housing of a gun assembly which is supported by hand during normal use shall meet the requirements of this standard if the probe illustrated in Figure 3-1, with a diameter (D) of 3/8 inch (9.53 mm), cannot be made to touch any uninsulated live parts or enamel-insulated wire when it is inserted point first into the opening to a maximum distance of 1 inch.

3.3.2 Openings in Apparatus Other Than the Gun Assembly

Openings in apparatus other than the gun assembly shall be judged as follows:

1. An opening which will admit a ¾-inch (19.05 mm) diameter rod shall meet the requirements of this standard if there are no uninsulated live parts or enamel-insulated wires (a) less than × inches (millimeters) from the perimeter of the opening or (b) within the volume generated by projecting the perimeter × inches (millimeters) normal to its plane. × equals five times the diameter of the largest diameter rod which can be inserted through the opening but not less than 4 inches (101.6 mm). (See Figure 3-2.)
2. An opening which will not admit a ¾-inch (19.05 mm) diameter rod shall meet the requirements of this standard if:
   a. The probe illustrated in Figure 3-1, with a diameter (D) of ½ inch (12.70 mm) cannot be made to touch enamel-insulated wire when inserted through the opening, and
   b. The probe illustrated in Figure 3-3 cannot be made to touch any uninsulated live parts when inserted through the opening.

NEMA Standard 1-11-1983.

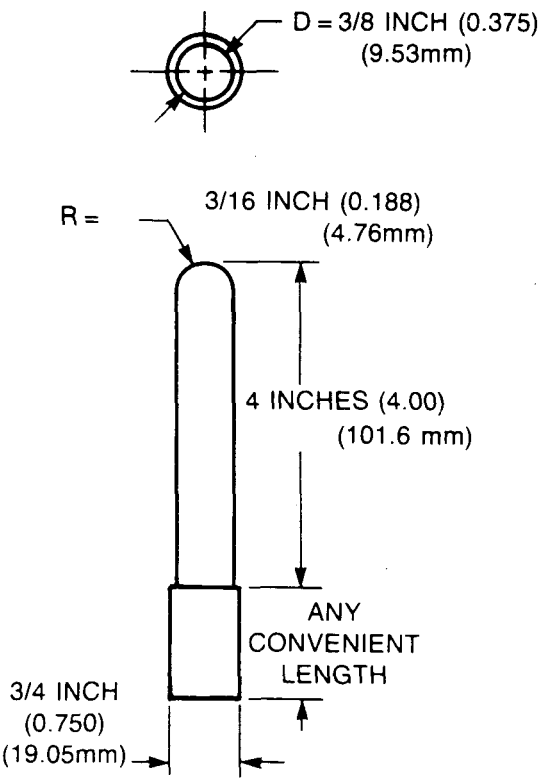

FIGURE 3-1

Copyright National Electrical Manufacturers Association
Provided by IHS under license with NEMA
No reproduction or networking permitted without license from IHS
Not for Resale

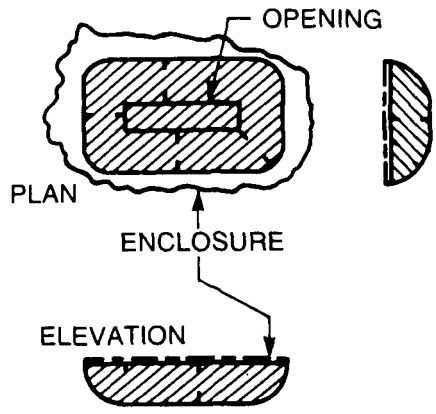

FIGURE 3-2

3.4 ENCLOSURE CONSTRUCTION

Enclosures shall be constructed of either sheet metal or an insulating material.

If the enclosure is constructed from sheet metal, the thickness shall not be less than that given in Table 3-1.

If the enclosure is constructed of insulating material, the material shall meet the requirements for Class 94V-0 of the Underwriters Laboratories Inc., *Tests for Flammability of Plastic Materials for Parts in Devices and Appliances,* UL 94. The enclosure shall have a mechanical strength at least equivalent to a sheet metal enclosure which is constructed in accordance with Table 3-1.

NEMA Standard 11-6-1975.

3.5 ROTATING PARTS

Rotating parts, such as motors, pulleys, belts, gears, drive rolls, etc., shall be so designed, enclosed, or guarded as to prevent accidental injury to personnel.

NEMA Standard 11-6-1975.

3.6 FILLER WIRE SUPPLY

The mounting of the filler wire supply, if integral with the wire feed unit, shall be so constructed as to have the strength and rigidity necessary to withstand the abuse to which it is likely to be subjected when fully loaded. Retaining means for the filler wire supply shall be so designed that the rotation and stops normally encountered will not in any way cause the filler wire supply to come loose. The supply or its mounting shall be insulated from the frame or enclosure of the wire feed unit.

NEMA Standard 11-6-1975.

3.7 CORROSION PROTECTION

Iron and steel parts, except bearings and other parts where protection is impractical, shall be suitably protected against corrosion if the deterioration of such unprotected parts would be likely to result in a hazardous condition.

NEMA Standard 11-6-1975.

3.8 SERVICE LINE HOSES

If supplied as a part of the wire feed system, service line hoses and hose connections shall meet the requirements for any of the types listed in the "Specification for Rubber Welding Hose," 1970 (Compressed Gas Association and Rubber Manufacturers Association) and the "Standard Hose Connection Specifications," 1957 (Compressed Gas Association).[1]

NEMA Standard 11-6-1975.

3.9 GUN ASSEMBLY

The materials used in the gun assembly shall be such that they will not be decomposed by the heat and radiation of the arc, thus resulting in dangerous levels of known toxic substances.

NEMA Standard 11-6-1975.

[1] Compressed Gas Association, 500 Fifth Avenue, New York, NY, 10036; Rubber Manufacturers Association, 1901 Pennsylvania Avenue, N.W., Washington, DC 20006.

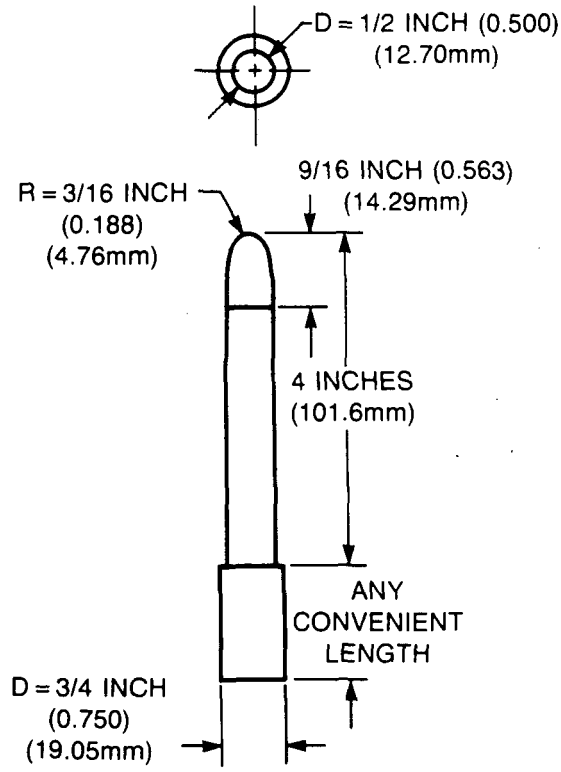

FIGURE 3-3

Copyright National Electrical Manufacturers Association
Provided by IHS under license with NEMA
No reproduction or networking permitted without license from IHS
Not for Resale

Table 3-1
Thickness of Sheet Metal for Enclosures

Maximum Area of Any Surface, Square Inches (Square mm)	Maximum Dimension, Inches (mm)	Minimum Thickness of Sheet Metal, Inches (mm)					
		Steel				Copper, Brass, Aluminum and Perforated and Expanded Steel	
		Without Supporting Frame		With Supporting Frame or Equivalent Reinforcing		Without Supporting Frame	With Supporting Frame or Equivalent Reinforcing
		Zinc Coated	Uncoated	Zinc Coated	Uncoated		
6* ($38.7 \times 10^2 mm^2$)	3 (76)	0.023 (0.58)	0.020 (0.51)	0.023 (0.58)	0.020 (0.51)	0.023 (0.58)	0.023 (0.58)
36 ($232 \times 10^2 mm^2$)	8 (203)	0.029 (0.74)	0.026 (0.66)	0.023 (0.58)	0.020 (0.51)	0.036 (0.91)	0.029 (0.74)
90 ($581 \times 10^2 mm^2$)	12 (305)	0.034 (0.86)	0.032 (0.81)	0.023 (0.58)	0.020 (0.51)	0.045 (1.14)	0.029 (0.74)
135 ($871 \times 10^2 mm^2$)	18 (457)	0.045 (1.14)	0.042 (1.07)	0.034 (0.86)	0.032 (0.81)	0.058 (1.47)	0.045 (1.14)
360 ($2322 \times 10^2 mm^2$)	24 (610)	0.056 (1.42)	0.053 (1.35)	0.045 (1.14)	0.042 (1.07)	0.075 (1.90)	0.058 (1.47)
1200 ($7741 \times 10^2 mm^2$)	48 (1219)	0.070 (1.78)	0.067 (1.70)	0.056 (1.43)	0.053 (1.35)	0.095 (2.41)	0.075 (1.90)

* Volume of enclosure shall be not more than 12 cubic inches ($19.6 \times 10^{-5} m^3$).

3.10 WATER COOLING

Any device or system which uses water for cooling shall be capable of operating at an inlet water pressure ranging from 30 psi (207 kPa) to 75 psi (517 kPa) and a water inlet temperature up to 49 °C. For rating purposes, the water inlet pressure shall be 30 psi (207 kPa) at a water inlet temperature of 49 °C.

NEMA Standard 11-6-1975.

3.11 DROP TESTING

3.11.1 Eyes or lugs which are provided for the purpose of lifting an assembled wire feed unit or system shall be capable of withstanding a free-fall jerk test. This test shall be conducted with the maximum weight of filler wire and shielding medium recommended if such storage means are provided as a part of the assembled unit or system. To conduct this test, the unit or system shall be suspended aloft from a rigid member by a chain or cable attached to the lifting eye or lug. The unit or system shall be positioned above and away from any surface that it might strike during the testing process.

The chain or cable suspension assembly shall be arranged so that a free fall of at least 6 inches (152.4 mm) takes place before the unit is caught in suspension, bringing the full force to bear on the lifting eye or lug. Three such falls shall be made.

3.11.2 An assembled wire feed unit or system, complete with the full storage means described in 3.11.1, shall be capable of withstanding a drop test. This test shall consist of three drops onto a hard and rigid surface from a height of not less than 6 inches (152.4 mm). These drops shall be so arranged that each drop will strike the unit or system on a bottom edge different from that of any other drop.

3.11.3 After the foregoing tests, the assembled wire feed unit or system shall still meet the requirements of this publication (other than in 3.11.1 and 3.11.2) in all respects even though there may be some deformation of the structural or case parts.

NEMA Standard 1-11-1983.

Copyright National Electrical Manufacturers Association
Provided by IHS under license with NEMA
No reproduction or networking permitted without license from IHS
Not for Resale

Section 4
ELECTRICAL CONSTRUCTION REQUIREMENTS

4.1 SERVICE LINE CORDS, CABLES, AND CONNECTIONS

4.1.1 Welding current cables shall be of the flexible type, specifically designed and constructed to withstand the rigors of welding service, and of a size adequate to carry the rated current.

4.1.2 Flexible cords shall be Type S, SO, SJ, or SJO and shall have a current-carrying capacity not less than the current rating of the circuit at its rated duty cycle.

4.1.3 Strain relief shall be provided for flexible cords and shall be capable of withstanding a 35-pound (156 N) tensile force for a period of 1 minute without transmitting mechanical strain to terminals, splices, or interior wiring.

4.1.4 Means shall be provided to prevent flexible cords from being pushed into the enclosure through the cord-entry hole if such displacement is likely to (1) subject the cord to mechanical damage or (2) expose the cord to a temperature higher than that for which it is suitable or (3) reduce spacings (such as to a metal strain relief clamp) below the values given elsewhere in this publication.

NEMA Standard 11-6-1975.

4.2 WIRE FEED UNIT AND CONTROL

4.2.1 Input Control Voltage Rating

Where the wire feed unit and control are not within the enclosure of the welding power source, the input control voltage rating of the wire feed system shall not exceed 115 volts rms.

4.2.2 Selection of Electrical Components

Electrical components shall be selected so that their rated temperature will not be exceeded when the wire feed system is operating at rated load under usual service conditions and so that their electrical ratings are suitable for the application.

4.2.3 Internal Wiring

The internal wiring shall consist of wires which are suitable for the particular application with respect to the temperature, current, voltage, exposure to oil or grease, and other conditions of service to which they are likely to be subjected.

NOTE—Wiring material of one or more of the types listed in Table 4-1 may be used for internal wiring if all requirements in 4.2.3 are met. (This note is approved as Authorized Engineering Information.)

The wiring shall be so arranged or protected that no damage to the conductor insulation will occur from contact with any rough, sharp, or moving part.

All joints and connections shall be mechanically secure and shall provide adequate and reliable electrical contact without mechanical strain.

An uninsulated conductor, if used within an enclosure, shall be so supported that the spacings given elsewhere in this publication will be maintained.

4.2.4 Mounting of Current-Carrying Parts

Insulating washers, bushings, sheets, etc., for the mounting or insulation of current-carrying parts shall be of moisture-resistant material which will not be damaged by the temperature to which they will be subjected during operation at rated load under usual service conditions.

4.2.5 Spacings

Spacings through air or over surfaces between an uninsulated live part and metallic enclosure or frame shall be not less than ⅛ inch (3.2 mm).

Table 4-1

	Thickness of Insulation for Wires Rated at 300 Volts					
	Nominal		Minimum		Plus Impregnated Braid Cover	Without Braid Cover
Type of Insulation	Inches	mm	Inches	mm		
Thermoplastic	1/32	0.79	0.028	0.71	...	...
Rubber, neoprene	1/64	0.40	0.013	0.33	×	...
or silicon rubber*	1/32	0.79	0.028	0.71	...	×

* Silicon-rubber-insulated wires without a braid cover must be routed away from live parts of opposite polarity and protected from mechanical damage during the installation of field wiring and during operation unless the insulation itself provides adequate protection against mechanical damage.

Copyright National Electrical Manufacturers Association
Provided by IHS under license with NEMA
No reproduction or networking permitted without license from IHS
Not for Resale

Spacings through air or over surfaces between live uninsulated wiring terminals with a difference in potential shall be not less than ⅛ inch (3.2 mm).

The foregoing spacings do not apply to wiring devices, connectors, switches, lamp holders, printed circuit boards, motors or other components for which spacings are given in the standards covering such components.

4.2.6 Grounding

All exposed non-current-carrying metal parts which are likely to become energized by input control power (other than that from the welding power circuit) under abnormal conditions shall have metal-to-metal contact or be otherwise electrically bonded together and shall be provided with a means for grounding. The grounding means shall be secured to the frame or enclosure by a screw or fastening that is not likely to be removed during any servicing operation other than the removal of the service line. Solder alone shall not be used for securing the grounding means.

4.2.7 Overload Protection

Fuses, circuit breakers and similar devices shall be provided to limit electrical control power during protracted periods of overload or other electrical faults occurring in the internal wiring or electrical components of the unit that would cause fire or other hazardous conditions.

NEMA Standard 1-11-1983.

4.3 GUN ASSEMBLY AND GUN CABLE ASSEMBLY

4.3.1 Except where the wire feed system is powered only from the welding power circuit, the voltage of any gun switch circuit shall be supplied from an isolated voltage source and shall not exceed 35 volts rms or 50 volts direct current. When the wire feed system is powered only from the welding arc, the voltage of any gun switch circuit shall not exceed the open-circuit-voltage rating of the welding power source.

4.3.2 Since the grounding of exposed metal parts on the gun assembly may constitute a hazard, such parts shall not be grounded.

4.3.3 Spacings through air or over surfaces between uninsulated live metal parts and exposed dead metal parts shall be not less than 1/16 inch (1.6 mm).

Spacings through air or over surfaces between live uninsulated metal parts with a difference in potential shall be not less than 1/16 inch (1.6 mm).

The foregoing spacings do not apply to wiring devices, connectors, switches, lamp holders, printed circuit boards, motors, or other components for which spacings are given in the standards covering such components.

4.3.4 The insulation of current-carrying parts shall be of moisture-resistant material which will not be damaged by the temperature to which the parts will be subjected when they are operating at rated load under usual service conditions.

4.3.5 Supply Lines

4.3.5.1 The cable which carries welding current to the gun assembly, whether water cooled or convection cooled or incorporated into a unified assembly, shall be selected so that the surface temperature of the cable or unified assembly will not exceed the temperatures given in Table 5-1. The test shall be made in accordance with 5.3.1.2.

4.3.5.2 Flexible control cords or control conductors shall be suitable for the particular application with respect to the temperature, current, voltage, exposure to oil and grease, and other conditions of service to which they are likely to be subjected. The connection at each end of the control cords or control conductors shall prevent any mechanical stress from being transmitted to the terminals, splices, or interior wiring of the gun assembly or wire feed unit.

Means shall be provided to prevent flexible control cords or control conductors from being pushed into the enclosure through the cord-entry hole if such displacement is likely to (a) subject the cord or conductor to mechanical damage or (b) expose the cord or conductor to a temperature higher than that for which it is suitable or (c) reduce spacings (such as to a metal strain relief clamp) below the values given elsewhere in this publication.

NEMA Standard 11-6-1975.

4.4 HIGH-POTENTIAL TEST AND INSULATION RESISTANCE

4.4.1 High-Potential Test

Each electrical circuit of the wire feed system shall be capable of withstanding for 1 minute, without breakdown, the application of a 60-hertz essentially sinusoidal test voltage of 1000 volts plus twice the rated voltage of the circuit. Alternatively, for production-line testing, a test voltage which is 20 percent greater than that used for the 1-minute test may be applied for 1 second.

The test voltage shall be applied successively between each input circuit and the enclosure and between each output circuit and the enclosure, with circuits not under test connected to the e closure.

Copyright National Electrical Manufacturers Association
Provided by IHS under license with NEMA
No reproduction or networking permitted without license from IHS
Not for Resale

Circuit interrupters such as relays, switches, etc., shall be bridged during the test so that the entire circuitry is tested. The welding power circuit, including all metal parts such as drive rolls, filler wire guides, filler wire supply means, etc., contacting the welding power circuit, shall be considered as a separate input circuit.

The high-potential test shall be made as a part of the manufacturer's tests on new and completely assembled machines.

Devices such as meters, rectifiers, capacitors, lamp holders, switches, fractional-horsepower motors, rheostats, electronic equipment, ground detectors, etc., which do not fall within the scope of this publication but for which there are standards for high-potential tests, and which require lower test voltages than called for in this publication, shall be grounded, short-circuited or disconnected before the high-potential tests are made.

4.4.2 Insulation Resistance

The insulation resistance of the gun assembly and other parts which are normally held by hand shall be not less than 1.0 megohm when a dc test voltage of 500 volts is applied between live parts and the external surfaces which are normally touched during the welding process.

Prior to being tested, a sample unit shall be kept in an enclosure for 48 hours at room temperature and a relative humidity of 90 to 95 percent. Immediately upon its removal from the enclosure, the unit shall be wrapped in metal foil. The foil shall be in intimate contact with the handle and with all exposed metal parts which are normally accessible. A dc test voltage of 500 volts shall be applied between the foil and the live parts of the welding power and control circuits.

NEMA Standard 11-6-1975.

Copyright National Electrical Manufacturers Association
Provided by IHS under license with NEMA
No reproduction or networking permitted without license from IHS
Not for Resale

Section 5
RATING AND PERFORMANCE

5.1 RATING OF WIRE FEED SYSTEM

The rating of a wire feed system and its elements shall include the minimum information listed below. The rating of a wire feed system element shall include the information listed below where applicable.

1. Rated current.
2. Maximum and minimum filler wire sizes.
3. Types of filler wire.
4. Rated speed range for each size of filler wire.
5. Duty cycle.
6. Input control voltage, current, and frequency.
7. Shielding gas(es).

NEMA Standard 1-11-1983.

5.2 PERFORMANCE

5.2.1 Feeding

The wire feed system shall be capable of feeding through the gun and gun cable assemblies in a smooth and uniform manner each size and type of filler wire over its rated speed range, as recommended by the manufacturer, under the following conditions:

5.2.1.1 The filler wire conduit, when used, shall be positioned so as to have a 12-inch (0.3-meter) radius, loop beginning at the wire feeder. If the conduit is long enough to form one complete loop, any remaining length shall be straight.

5.2.1.2 If the filler wire supply has an overrun limiting device, the device shall be adjusted so that not more than 40 degrees of spool rotation will take place when the wire feed unit is stopped, with the maximum amount of filler wire stored on the spool.

5.2.1.3 Usual service conditions, see 2.2.

5.2.1.4 All components are in place, adjusted, and in the condition in which they are normally supplied for welding.

5.2.2 Loading

Under the conditions outlined in 5.2.1 and with the filler wire size and rated speed that produces the most severe loading conditions within the rating of the wire feed unit, the loading on the unit shall be not greater than 75 percent of maximum load.

NEMA Standard 1-11-1983.

5.3 TEMPERATURE TESTING

5.3.1 Wire Feed System

5.3.1.1 The wire feed system shall be capable of operating indefinitely under maximum load at a repetitive duty cycle of 6 minutes on and 4 minutes off without causing any component to exceed its rated temperature. For water-cooled apparatus, see 3.10.

Under these conditions, the temperature on any external surface that may be contacted by the user (other than that part of the gun assembly from the handle to the end of the contact tube or nozzle) shall not exceed the values given in Table 5-1 at an ambient temperature of 25 °C. If the test is conducted at an ambient temperature other than 25 °C, the results shall be corrected to 25 °C.

5.3.1.2 Additionally, the wire feed system shall meet the requirements of 5.3.1.1 when it is cycled for 4 seconds on and 2 seconds off during the 6-minute on time of the duty cycle specified in 5.3.1.1.

5.3.2 Gun and Gun Cable Assemblies

The testing of the gun and gun cable assemblies for the temperatures specified in 5.3.1 shall be conducted as follows:

5.3.2.1 A weld bead shall be deposited on a horizontal work surface which may be water cooled.

5.3.2.2 The rate of travel shall be selected so that a continuous following weld pool is maintained.

Table 5-1
MAXIMUM TEMPERATURES ON EXTERNAL SURFACES

Location and/or Type of Surface	Composition of Surface: Metallic	Composition of Surface: Non-metallic
1. Handle or knob grasped for lifting, carrying or holding.....	50 °C	60 °C
2. Handle, knob or surface of the enclosure that is intended to be contacted during normal use but does not require continuous holding	60 °C	85 °C
3. Surface subjected to casual contact.....	70 °C	95 °C

Copyright National Electrical Manufacturers Association
Provided by IHS under license with NEMA
No reproduction or networking permitted without license from IHS
Not for Resale

5.3.2.3 The filler wire entering the weld pool shall be perpendicular to the horizontal surface and the gun assembly handle shall be 90 degrees from the direction of travel.

5.3.2.4 Welding parameters shall be those shown in:

Figure 5-1, Part 1—for flux cored arc welding without gas.

Figure 5-1, Part 2—for flux cored arc welding with CO^2 gas.

Figure 5-2, Part 1—for gas metal arc welding with CO^2 gas and solid electrode.

Figure 5-3—for gas-tungsten arc welding with filler wire.

The welding voltage shown on the curves in Figures 5-1 and 5-2 is measured from the gun assembly to the work. Welding process parameters have a tolerance of plus or minus five percent.

5.3.2.5 For validating the rated current of the gun and gun cable assembly for submerged arc welding, the electrode shall be copper-coated AWS EL-12 and welding polarity shall be electrode positive.

5.3.2.6 In each case, the test shall be run with that filler wire size within the rated range of the gun and gun cable assembly that produces the highest temperature. NEMA Standard 1-11-1983.

5.4 OTHER PERFORMANCE DATA

5.4.1 When performance data is given for other gases (see 5.4.3 and Figure 5-2, Part 2), or other duty cycles, or both, in addition to the specified 60 percent duty cycle, the tests performed shall comply with the procedures and limits as given in this publication in all other respects.

5.4.2 When performance data is given for the maximum regulation of filler wire speed with respect to load, to input control voltage, and to warm up, it shall be calculated as follows:

5.4.3.1 MAXIMUM REGULATION OF FILLER WIRE FEED SPEED WITH RESPECT TO LOAD

The maximum variation in wire feed speed at any preset speed within the rated speed range shall be determined by:

$$\left[\frac{S_1 - S_2}{S_2}\right] \times 100 = {}^{R}(\text{Load})$$

where—

^{R}(Load) = speed regulation due to load change (in percent).

S_1 = Wire feed speed at ½ maximum load.

S_2 = Wire feed speed at maximum load.

The wire feed unit and feed control shall be operated for at least ½ hour at ½ their maximum load before making this test.

5.4.3.2 MAXIMUM REGULATION OF FILLER WIRE FEED SPEED WITH RESPECT TO INPUT CONTROL VOLTAGE (ICV)

The maximum variation in wire feed speed throughout all loads and speeds within the rated speed range when the input control voltage is varied within plus and minus 10 percent of the rated input control voltage shall be determined by:

$$\left[\frac{S_1 - S_2}{S_2}\right] \times 100 = {}^{R}(\text{ICV})$$

where—

^{R}(ICV) = Speed regulation due to ICV change (in percent).

S_1 = Wire feed speed at ± 10 percent of rated ICV.

S_2 = Wire feed speed at rated ICV.

The wire feed unit and wire feed control shall be operated for at least ½ hour at ½ their maximum load before making this test.

5.4.3.3 MAXIMUM REGULATION OF FILLER WIRE FEED SPEED WITH RESPECT TO WARM-UP

The maximum variation in wire feed speed at maximum load throughout the rated speed range due to the rise in the temperature of components from the ambient temperature to the operating temperature shall be determined by:

$$\left[\frac{S_1 - S_2}{S_2}\right] \times 100 = {}^{R}(\text{T. Rise})$$

where—

^{R}(T. Rise) = Speed regulation due to temperature rise (in percent).

S_1 = Wire feed speed at ambient temperature.

S_2 = Wire feed speed at operating temperature.

The ambient temperature shall be stated and maintained within a tolerance of ± 5 °C (9 °F).

NEMA Standard 11-6-1975.

5.4.3 Other Ratings

When gun and cable assembly are to be rated for argon enriched gases, the welding parameters shall be those shown in Figure 5-2, Part 2, Gas Metal Arc Welding with Argon Gas and Solid Electrode.

Copyright National Electrical Manufacturers Association
Provided by IHS under license with NEMA
No reproduction or networking permitted without license from IHS
Not for Resale

Section 6
MARKINGS

6.1 WIRE FEEDER NAMEPLATE

The wire feed unit or the major element of the system shall be plainly marked in a location where the markings will be readily visible, with the following minimum information:

1. Manufacturer's name and model number.
2. Input control voltage.
3. Input control frequency.
4. Input control current in amperes at maximum load.
5. The words "NEMA EW 3".

6.2 GUN ASSEMBLY AND GUN CABLE ASSEMBLY NAMEPLATE

The gun assembly and gun cable assembly shall have a single nameplate located where it will be readily visible and plainly marked with the following minimum information: (See 1.5 and 5.3.)

1. Welding current rating in amperes at 60 percent duty cycle.
2. The words "60 percent Duty Cycle-CO_2" for guns designed for use with gas or the words "60 Percent Duty Cycle" for guns designed for use without gas. (Duty Cycle may be abbreviated as "D/C".)
3. The words "NEMA EW 3".

NEMA Standard 1-11-1983.

Copyright National Electrical Manufacturers Association
Provided by IHS under license with NEMA
No reproduction or networking permitted without license from IHS
Not for Resale

FIG. 5-1 PART 1
FLUX CORED ARC WELDING WITHOUT GAS

FOR VALIDATING THE RATED CURRENT OF THE GUN AND CABLE ASSEMBLY, THE WORST CASE CONDITION TAKEN FROM THE CURVES BELOW SHALL BE USED.

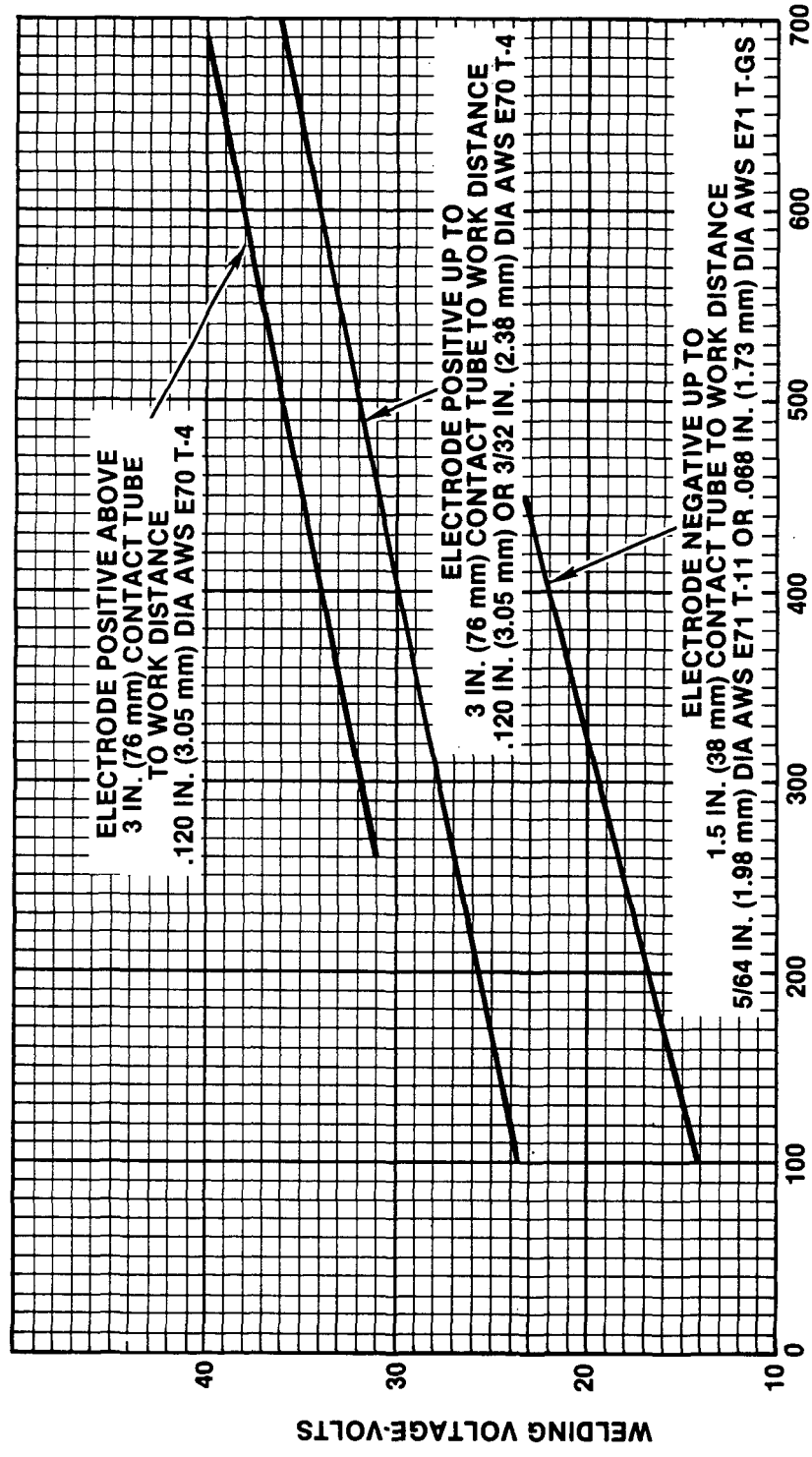

Copyright National Electrical Manufacturers Association
Provided by IHS under license with NEMA
No reproduction or networking permitted without license from IHS
Not for Resale

FIG. 5-1 PART 2

FLUX CORED ARC WELDING WITH CO_2 GAS

FOR VALIDATING THE RATED CURRENT OF THE GUN AND CABLE ASSEMBLY, THE WORST CASE CONDITION TAKEN FROM THE CURVES BELOW SHALL BE USED.

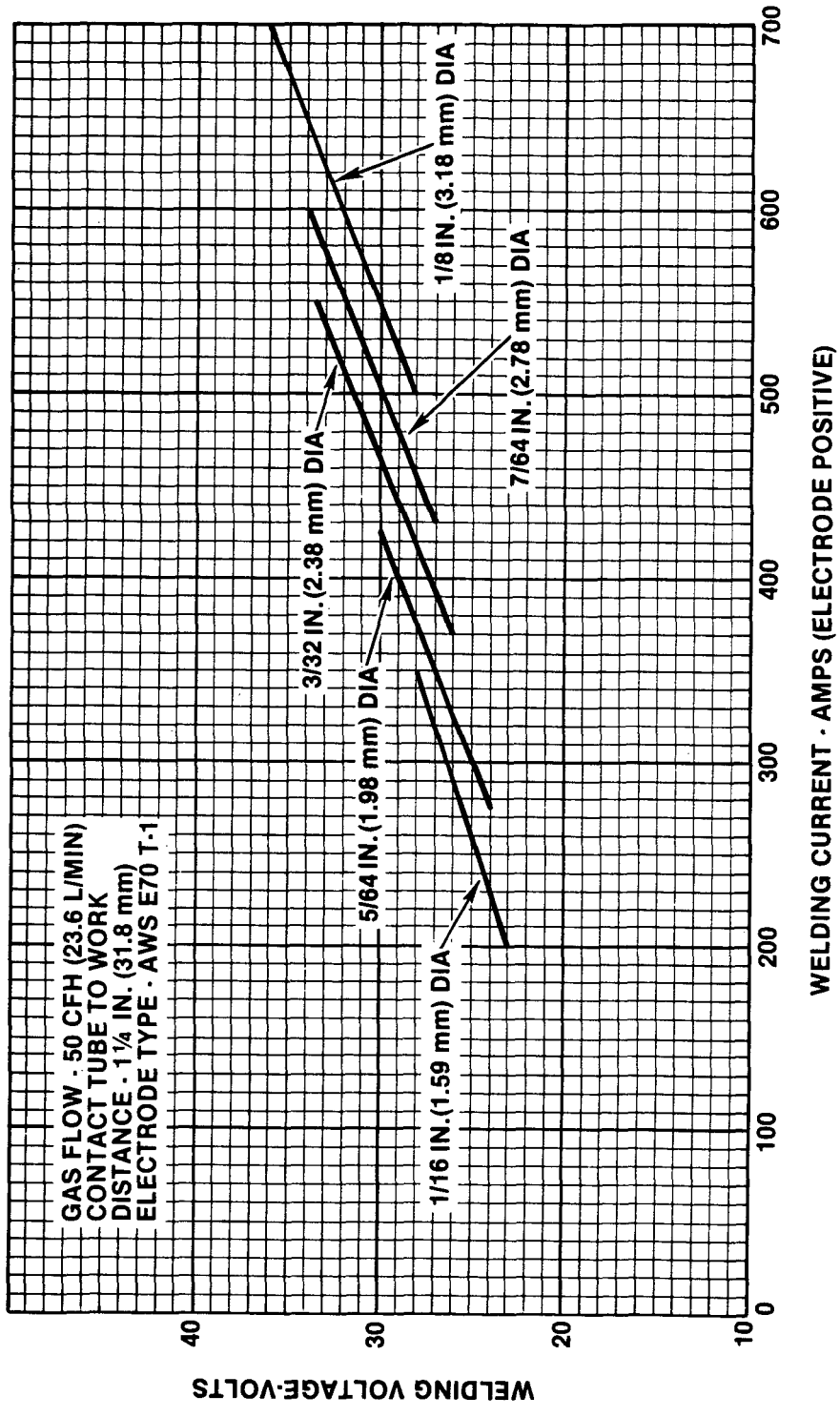

Copyright National Electrical Manufacturers Association
Provided by IHS under license with NEMA
No reproduction or networking permitted without license from IHS
Not for Resale

FIG. 5-2 PART 1

GAS METAL ARC WELDING WITH CO_2 GAS AND SOLID ELECTRODE

FOR VALIDATING THE RATED CURRENT OF THE GUN AND CABLE ASSEMBLY, THE WORST CASE CONDITION TAKEN FROM THE CURVES BELOW SHALL BE USED.

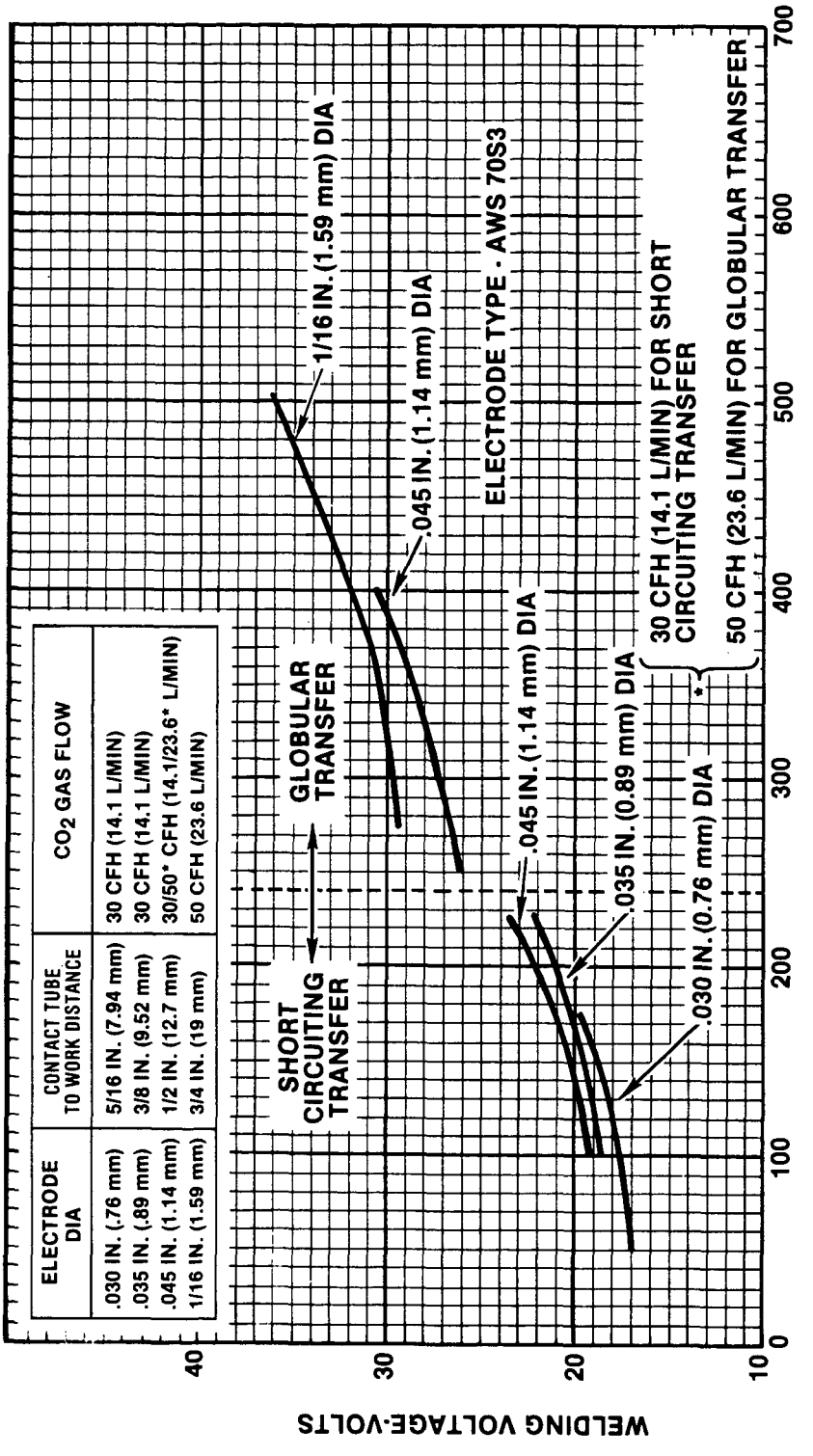

Copyright National Electrical Manufacturers Association
Provided by IHS under license with NEMA
No reproduction or networking permitted without license from IHS
Not for Resale

FIG. 5-2 PART 2

GAS METAL ARC WELDING WITH ARGON GAS AND SOLID ELECTRODE

FOR VALIDATING THE RATED CURRENT OF THE GUN AND CABLE ASSEMBLY, THE WORST CASE CONDITION TAKEN FROM THE CURVES BELOW SHALL BE USED.

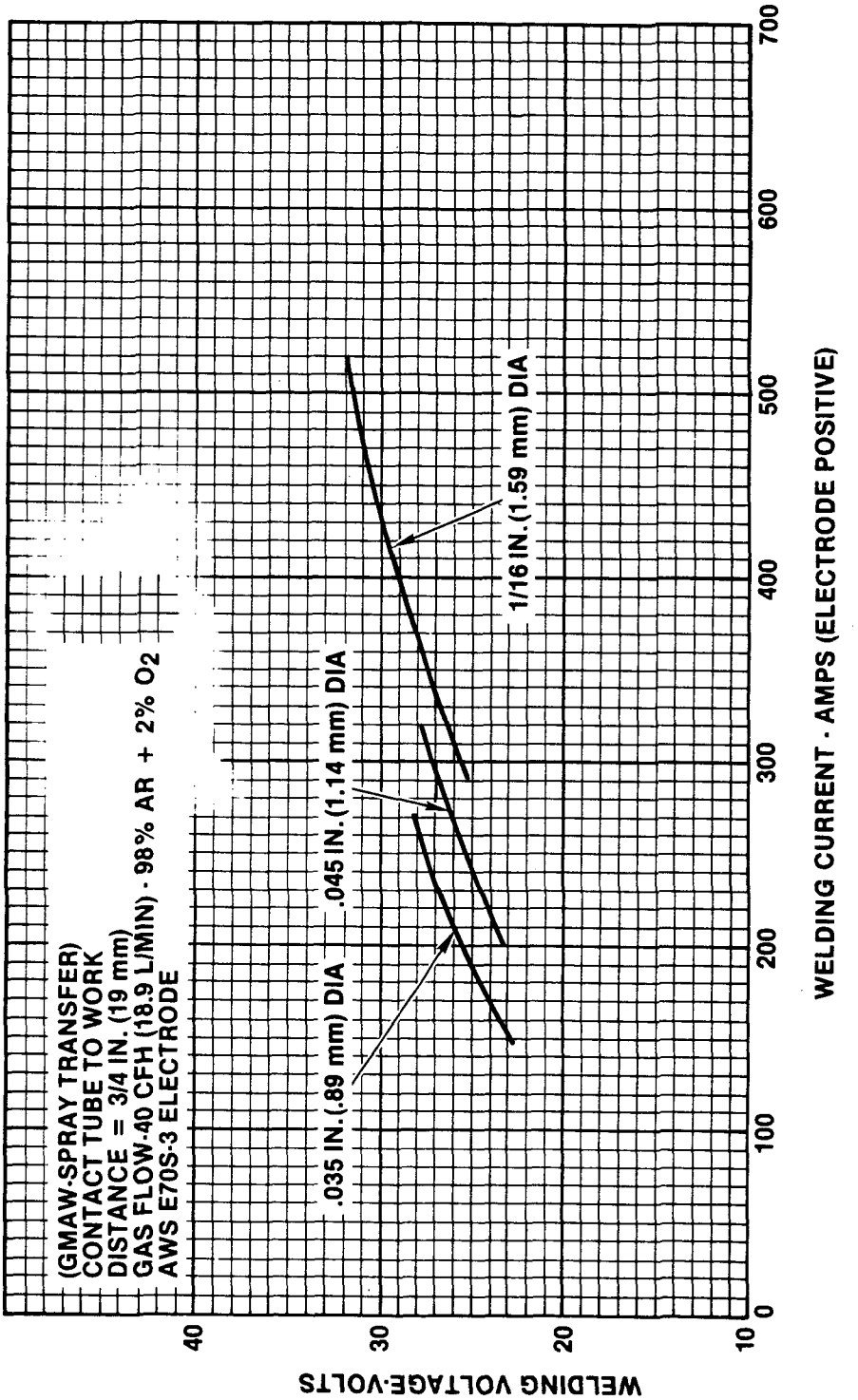

Copyright National Electrical Manufacturers Association
Provided by IHS under license with NEMA
No reproduction or networking permitted without license from IHS
Not for Resale

FIG. 5-3

GAS TUNGSTEN ARC WELDING WITH FILLER WIRE

FOR VALIDATING THE RATED CURRENT OF THE GUN AND CABLE ASSEMBLY, THE FOLLOWING PARAMETERS SHALL BE USED.

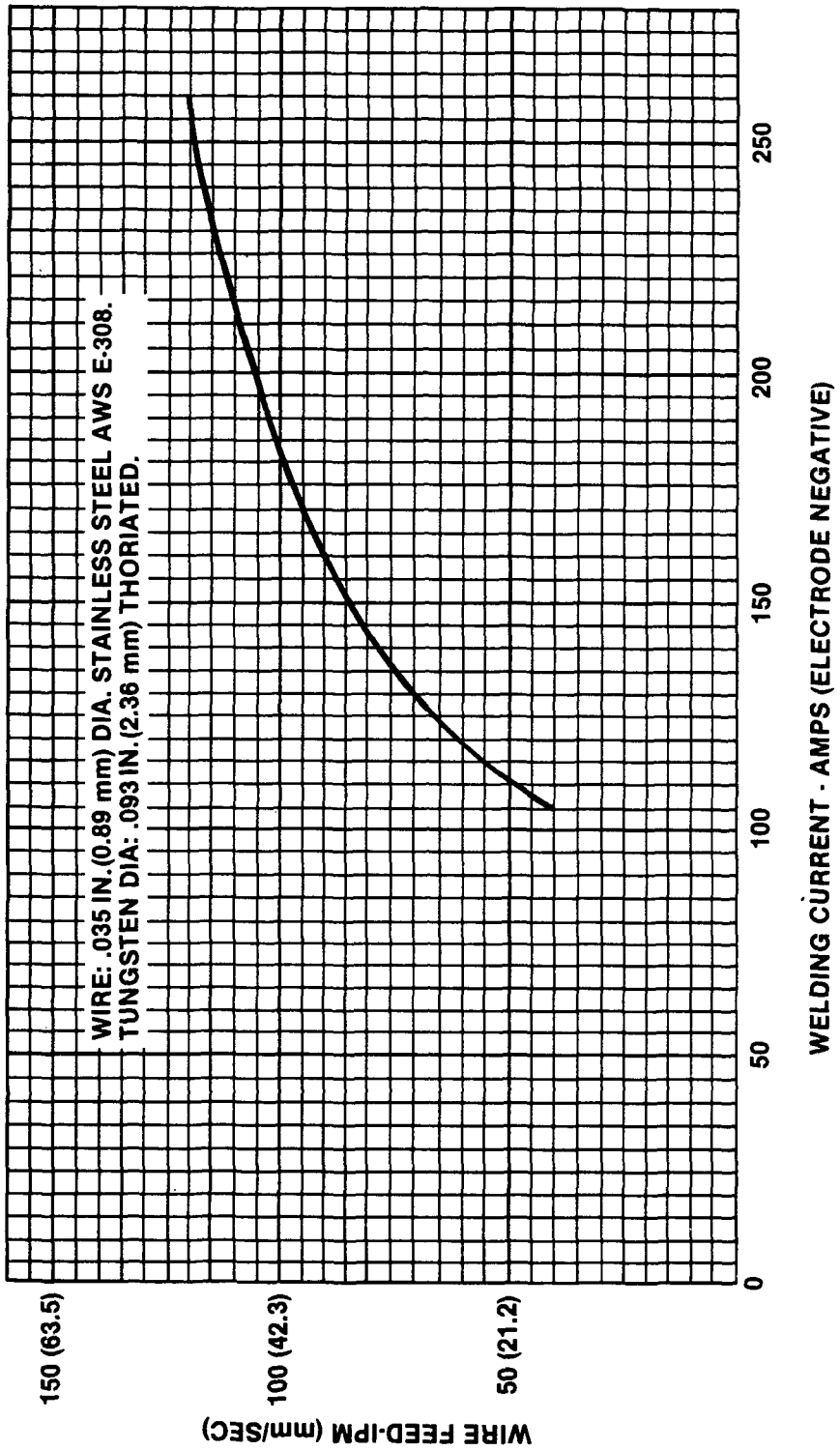

Copyright National Electrical Manufacturers Association
Provided by IHS under license with NEMA
No reproduction or networking permitted without license from IHS
Not for Resale

NEMA STANDARDIZATION

The purpose of NEMA Standards, their classification and status are set forth in certain clauses of the NEMA Bylaws, which are quoted below:

Purpose of Standards

National Electrical Manufacturers Association Standards are adopted in the public interest and are designed to eliminate misunderstandings between the manufacturer and the purchaser and to assist the purchaser in selecting and obtaining the proper product for its particular need. Existence of a National Electrical Manufacturers Association Standard does not in any respect preclude any member or nonmember from manufacturing or selling products not conforming to the standard.

(Bylaw—Art. V, Sec. 1)

Definition of a Standard

A standard of the National Electrical Manufacturers Association defines a product, process or procedure with reference to one or more of the following: nomenclature, composition, construction, dimensions, tolerances, safety, operating characteristics, performance, quality, rating, testing and the service for which designed.

(Bylaw—Art. V, Sec. 2, Subsection A)

Classes of Standards

National Electrical Manufacturers Association Standards are of two classes:

1. NEMA Standard, which relates to a product commercially standardized and subject to repetitive manufacture, which standard has been approved by at least 90 percent of the members of the Subdivision eligible to vote thereon;

2. Suggested Standard for Future Design, which may not have been regularly applied to a commercial product, but which suggests a sound engineering approach to future development, which standard has been approved by at least two-thirds of the members of the Subdivision eligible to vote thereon.

(Bylaw—Art. V, Sec. 2, Subsection B)

Authorized Engineering Information

Authorized Engineering Information consists of explanatory data and other engineering information of an informative character not falling within the classification of NEMA Standard or Suggested Standard for Future Design.

(Bylaw—Art. V, Sec. 6, 1st Sentence)

Official Standards Proposal

An Official Standards Proposal is an official draft of a proposed standard which is formally recommended to an outside organization(s) for consideration, comment and/or approval.

(Bylaw—Art. V, Sec. 4, Subsection A)

Identification of Status

Standards in NEMA Standards Publications are identified in the foreword or following each standard as "NEMA Standard" or "Suggested Standard for Future Design." These indicate the status of the standard. These words are followed by a date which indicates when the standard was adopted in its present form by the Association.

The material identified as "Authorized Engineering Information" and "Official Standards Proposal" is designated similarly.

Copyright National Electrical Manufacturers Association
Provided by IHS under license with NEMA
No reproduction or networking permitted without license from IHS
Not for Resale

ARC WELDING SECTION

OF THE

NATIONAL ELECTRICAL MANUFACTURERS ASSOCIATION

MEMBER COMPANIES

Airco Welding Products Div.
Airco, Inc.
Murray Hill, NJ 07974

Century Mfg. Co.
Minneapolis, MN 55431

Emerson Electric Co.
Hazelwood, MO 63042

Hobart Brothers Co.
Troy, OH 45373

Lincoln Electric Co., The
Cleveland, OH 44117

Miller Electric Mfg. Co.
Appleton, WI 54912

Pow Con Corporation
Tempe, AZ 85281

Union Carbide Corp.
Linde Division
Danbury, CT 06817

Westinghouse Electric Corp.
Sykesville, MD 21784

Copyright National Electrical Manufacturers Association
Provided by IHS under license with NEMA
No reproduction or networking permitted without license from IHS
Not for Resale

STD.NEMA EW 3-ENGL 1983 ■ 6470247 0527791 582 ■

STANDARDS PUBLICATION/NO. EW 3

nema

Semiautomatic Wire Feed Systems for Arc Welding

NEMA

NATIONAL ELECTRICAL MANUFACTURERS ASSOCIATION ■ 2101 L STREET, N.W., WASHINGTON, D.C. 20037

Copyright National Electrical Manufacturers Association
Provided by IHS under license with NEMA
No reproduction or networking permitted without license from IHS
Not for Resale

STD.NEMA EW 3-ENGL 1983 ■ 6470247 0527792 419 ■

NEMA EW 3-1983 (R1989)

EW 3

SEMIAUTOMATIC WIRE FEED SYSTEMS FOR ARC WELDING

Revision No. 1—November 1991

Published by:

National Electrical Manufacturers Association
2101 L Street, N.W., Suite 300
Washington, D.C. 20037

© 1988 by National Electrical Manufacturers Association

Copyright National Electrical Manufacturers Association
Provided by IHS under license with NEMA
No reproduction or networking permitted without license from IHS
Not for Resale

TABLE OF CONTENTS

FOREWORD i
SCOPE ii
PURPOSE ii

Section 1 REFERENCED STANDARDS AND DEFINITIONS
Referenced Standards 1
Definitions 2

Section 2 SERVICE CONDITIONS
General 4
Usual Service Conditions 4
Unusual Service Conditions 4

Section 3 MECHANICAL CONSTRUCTION REQUIREMENTS
Frames and Enclosures – General Strength Conditions 5
Enclosure of Live Parts 5
Openings in Enclosures 5
Enclosure Construction 5
Rotating Parts 6
Filler Wire Supply 6
Corrosion Protection 6
Service Line Hoses 7
Gun Assembly 7
Water Cooling 7
Drop Testing 7

Section 4 ELECTRICAL CONSTRUCTION REQUIREMENTS
Service Line Cords, Cables, and Connections 9
Wire Feed Unit and Control 9
Gun Assembly and Gun Cable Assembly 10
High-Potential Test and Insulation Resistance 10

Section 5 RATING AND PERFORMANCE
Rating of Wire Feed System 12
Performance 12
Temperature Testing 12
Other Performance Data 13

Section 6 MARKINGS
Wire Feeder Nameplate 14
Gun Assembly and Gun Cable Assembly Nameplate 14

LIST OF TABLES
3-1 Thickness of Sheet Metal for Enclosures 7
5-1 Maximum Temperatures of External Surfaces 12

LIST OF FIGURES
3-1 Probe 5
3-2 Enclosure Opening 6
3-3 Probe 6
5-1 Part 1 – Flux Cored Arc Welding without Gas 15
5-1 Part 2 – Flux Cored Arc Welding with CO_2 Gas 16

Copyright National Electrical Manufacturers Association
Provided by IHS under license with NEMA
No reproduction or networking permitted without license from IHS
Not for Resale

5-2 Part 1—Gas Metal Arc Welding with CO_2 Gas and Solid Electrode 17
5-2 Part 2—Gas Metal Arc Welding with Argon Gas and Solid Electrode 18
5-3 Gas Tungsten Arc Welding with Filler Wire 19

Copyright National Electrical Manufacturers Association
Provided by IHS under license with NEMA
No reproduction or networking permitted without license from IHS
Not for Resale

Foreword

This Standards Publication was developed by the NEMA Arc Welding Section and it includes requirements for construction, ratings, and performance applying to certain wire feed systems used in semiautomatic arc welding processes. These requirements are based upon sound engineering principles, research, and records of tests and field experience. Also involved is an appreciation of the problems of manufacture, installation, and use derived from consultation with and information obtained from manufacturers, users, and others having specialized experience.

Two 90-day public reviews for comments were solicited through the American Welding Society's *Welding Journal* and the NEMA Arc Welding Section canvass list in order to ensure that the views of interested parties in the public and private sector were given full consideration. Their comments and suggestions, prior to final NEMA approval, provided vital user and general interest input, and resulted in a number of substantive changes being made in this publication.

These standards will be reviewed periodically by the Arc Welding Section of NEMA for any changes which may be necessary to keep them up to date. As future major revisions to this publication are proposed, it is intended to offer the same or similar individuals a further opportunity to participate in the development of this publication. Proposed or recommended revisions should be submitted to:

Vice President, Engineering
National Electrical Manufacturers Association
2101 L Street, N.W.
Washington, D.C. 20037

Copyright National Electrical Manufacturers Association
Provided by IHS under license with NEMA
No reproduction or networking permitted without license from IHS
Not for Resale

Scope

This Standards Publication applies to wire feed systems used in semiautomatic arc welding processes such as gas-metal arc welding, flux-cored arc welding with gas, flux-cored arc welding without gas, submerged arc welding, and gas-tungsten arc welding with the addition of filler wire.

The wire feed unit may be a stand-alone unit which may be connected to a separate arc welding power source or one where the arc welding power source and the wire feed unit are housed in a single enclosure. This publication does not apply to automatic arc welding systems or to gas-tungsten arc welding apparatus without the addition of filler wire.

Purpose

This NEMA Standards Publication is adopted in the public interest to provide a standard for performance and construction and in doing so to assist buyers in selecting and obtaining the proper product for their particular need.

Recommended safe practices and installation intended to prevent personal injury and property damage arising out of the use of this equipment are covered more completely in other related safety publications such as the manufacturers' instructions; ANSI/NFPA 70, *National Electrical Code*; ANSI/AWS Z49.1, *Safety in Welding and Cutting*; and AWS C5.6, *Recommended Safe Practices for Gas-Metal Arc Welding*.

Copyright National Electrical Manufacturers Association
Provided by IHS under license with NEMA
No reproduction or networking permitted without license from IHS
Not for Resale

Section 1
REFERENCED STANDARDS AND DEFINITIONS

1.1 REFERENCED STANDARDS

American National Standards Institure
1430 Broadway
New York, NY 10018

Z49.1-1988	*Safety in Welding and Cutting*
C57.12.90-1987	*American National Standard for Distribution Power, and Regulating Transformers Test Code for Liquid Immersed*
C63.2-1987	*Standard for Instrumentation - Electromagnetic Noise and Field Strength, 10KHz to 40GHz - Specific*
C63.4-1981	*Methods of Measurement of Radio Noise Emissions from Low-Voltage Electrical and Electromagnetic Equipment in the 10KHz to 1GHz Range.*

American Welding Society
550 N.W. LeJeune Road, P.O. Box 351040
Miami, FL 33135

C5.6-1979	*Recommended Practices for Gas-Metal Arc Welding*

Compressed Gas Association
Crystal Gateway 1, Suite 501
1235 Jefferson Davis Highway
Arlington, VA 22202

E-1-1980	*Standard Connections for Regulator Outlets, Torches and Fitted Hose for Welding and Cutting Equipment*
E-2-1983	*Hose Link Check Valve Standards for Welding and Cutting*

Institute of Electrical and Electronics Engineers
345 E. 47th St.
New York, NY 10017

112-1984	*Standard Test Procedure for Polyphase Induction Motors and Generators*
113-1985	*Guide on Test Procedures for DC Machines*
117-1974 (R1985)	*Standard Test Procedure for Evaluation of Systems of Insulating Materials for Random-Wound AC Electric Machinery*
304-1977	*Test Procedure Evaluation and Classification of Insulation System for DC Machines*

National Electrical Manufacturers Association
2101 L Street, N.W., Suite 300
Washington, D.C. 20037

WD 1-1983	*General Requirements for Wiring Devices*
EW 1-1988	*Electric Arc Welding Power Sources*

Copyright National Electrical Manufacturers Association
Provided by IHS under license with NEMA
No reproduction or networking permitted without license from IHS
Not for Resale

National Fire Protection Association
Batterymarch Park
Quincy, MA 02269

ANSI/NFPA 70-1990 *National Electric Code*

Rubber Manufacturers Association
1400 K Street, N.W.
Washington, D.C. 20005

IP2-1987 *Hose Handbook*

IP7-1990 *Specifications for Rubber Welding Hose*

Underwriters Laboratories, Inc.
333 Pfingsten Road
Northbrook, IL 60062

ANSI/UL 94-1990 *Test for Flammability of Plastic Materials for Parts in Devices and Appliances*

ANSI/UL 551-1986 *TransformersType Arc Welding Machines*

1.2 DEFINITIONS

AUTOMATIC ARC WELDING
Welding with equipment which performs the entire welding operation without constant observation and adjustment of the controls by an operator. The equipment may or may not load and unload the work.
NEMA Standard 11-6-1975.

CONTACT TUBE
A device which transfers welding current to a continuous electrode.
NEMA Standard 11-6-1983.

DRIVE ROLLS
Rolls which contact the filler wire and transfer the mechanical power from the motor/gear portion of the wire-feed unit to the filler wire to feed the wire from the filler wire supply to the arc.
NEMA Standard 11-6-1975.

DUTY CYCLE
The ratio (expressed as a percent) of arc time to total time. For the purpose of these standards, the time period of one complete cycle shall be 10 minutes.
NEMA Standard 11-6-1975.

ELECTRODE
A component of the welding circuit in the form of continuous filler wire through which the welding current is conducted. It is melted by the arc and deposited in the weld seam.
NEMA Standard 11-6-1975.

FILLER METAL
The metal to be added in making a weld.
NEMA Standard 11-6-1975.

FILLER WIRE
Filler metal in wire form.
NEMA Standard 11-1-1983.

FILLER WIRE CONDUIT
A flexible, tubular member which insulates or guides the filler wire, or both.
NEMA Standard 11-6-1975.

FILLER WIRE SUPPLY
The filler wire which is stored for continuous pay-out to the wire feed unit. The wire feed unit may have integral provisions for the filler wire supply, or the filler wire supply may be remote from the wire feed unit with continuous pay-out achieved by means of filler wire conduit, pulleys, rollers, etc.
NEMA Standard 11-6-1975.

FLUX CORED ARC WELDING (FCAW)
An arc welding process wherein coalescence is produced by heating with an arc between a continuous filler metal (consumable) electrode and the work. Shielding is obtained from a flux contained within the tubular electrode. Additional shielding may or may not be obtained from an externally supplied gas or gas mixture.
NEMA Standard 1-11-1983.

GAS METAL ARC WELDING (GMAW)
An arc welding process which produces coalescence of metals by heating them with an arc between a continuous filler metal (consumable) electrode and the work. Shielding is obtained entirely from an externally supplied gas or gas mixture.
NEMA Standard 1-11-1983.

GAS TUNGSTEN ARC WELDING (GTAW).
An arc welding process that produces coalescence of metals by heating them with an arc between a tungsten electrode (non-consumable) and the workpieces. Shielding is obtained from a gas. Pressure shall be permitted to be used, and filler metal shall be permitted to be used.
NEMA Standard 11-17-1989.

GUN ASSEMBLY
A hand held manipulated device which guides the filler wire into the arc. It may include provisions for the transfer of welding current to the electrode, shielding, fume removal, filler wire supply, and control means for the welding process.
NEMA Standard 11-6-1975.

Copyright National Electrical Manufacturers Association
Provided by IHS under license with NEMA
No reproduction or networking permitted without license from IHS
Not for Resale

GUN CABLE ASSEMBLY
The flexible supply lines necessary for the operation of the gun assembly. It includes a cable which carries welding current and may also include a filler wire conduit, means for conveying shielding medium, cooling medium, means for fume removal, control wires, and line for nonelectric drives.
NEMA Standard 1-11-1983.

GUN SWITCH
The part of the gun assembly that is used to start, stop, or otherwise control the wire feed system.
NEMA Standard 11-6-1975.

INPUT CONTROL CURRENT
The input amperage required to operate the wire feed system.
NEMA Standard 11-17-1989.

INPUT CONTROL FREQUENCY
The nominal frequency or frequencies of the input control voltage.
NEMA Standard 1-11-1983.

INPUT CONTROL POWER
The input electrical power required to operate the wire feed system.
NEMA Standard 11-17-1989.

INPUT CONTROL VOLTAGE
The input voltage required from an external source to operate the wire feed system.
NEMA Standard 1-11-1983.

LIVE PARTS
Any parts which can be expected to be electrically energized during normal operation.
NEMA Standard 11-6-1975.

MANUFACTURER
The company whose name is shown on the nameplate.
NEMA Standard 11-6-1975.

MAXIMUM LOAD
The maximum mechanical load at the various rated wire feed speeds over the operating ranges of the equipment at which the wire feed unit and wire feed control can operate at the rated duty cycle without causing the rated temperature rise of any component to be exceeded.
NEMA Standard 11-6-1975.

NOZZLE
A device which directs shielding medium to or removes fumes from the welding arc.
NEMA Standard 1-11-1983.

RATED CURRENT
The amperage at which a device can operate at the rated duty cycle without exceeding its rated temperature.
NEMA Standard 11-17-1989.

RATED SPEED RANGE
The wire feed speed range in inches per minute or millimeters per second, or both, listed by the manufacturer for each rated size of filler wire.
NEMA Standard 11-6-1975.

SEMIAUTOMATIC ARC WELDING
Arc welding with equipment which controls only the feeding of the filler wire. The manipulation of the welding gun assembly is manually controlled.
NEMA Standard 11-6-1975.

SERVICE LINES
The lines between the source of power equipment or other equipment, or both, and the wire feed control or unit. These lines may consist of:
1. A welding cable to supply the welding power to the system.
2. Flexible cord(s) to supply input control power and to interconnect control circuits, such as that for the welding contractor, as required.
3. Hoses to supply shielding medium, cooling or fume removal.
4. Hoses, lines, or conduits required for nonelectric power or control.
NEMA Standard 1-11-1983.

SHIELDING MEDIUM
Gas, flux, or other material which is used to shield the arc and molten weld metals from the atmosphere.
NEMA Standard 1-11-1983.

SUBMERGED ARC WELDING (SAW)
An arc welding process which produces coalescence of metals by heating them with an arc or arcs between a bare metal electrode or electrodes and the work. The arc and molten metal are shielded by a blanket of granular, fusible material on the work.
NEMA Standard 1-11-1983.

WELDING CURRENT
The amperage flowing in the welding circuit during the making of a weld.
NEMA Standard 11-17-1989.

WELDING POWER CIRCUIT
Any part of the system which is electrically energized by the welding power of the welding power source.
NEMA Standard 11-6-1975.

WELDING POWER SOURCE
A source of welding current and voltage for arc welding.
NEMA Standard 11-6-1975.

WIRE FEED CONTROL
The electrical apparatus or mechanical apparatus, or both, that control(s) the wire feed unit, the sequence of operations, and the services as required.
NEMA Standard 11-6-1975.

WIRE FEED SYSTEM
A system which applies a continuous filler wire to an arc or weld zone. The system usually includes the following elements: a gun assembly, gun cable assembly, wire feed unit, wire feed control, filler wire supply, and service line.
NEMA Standard 11-6-1975.

WIRE FEED UNIT
The apparatus that converts control power to mechanical power and transfers it to the filler wire. It usually includes a motor, speed reducing means, drive rolls, and filler wire guides. It may also include the wire feed control and filler wire supply.
NEMA Standard 11-6-1975.

Copyright National Electrical Manufacturers Association
Provided by IHS under license with NEMA
No reproduction or networking permitted without license from IHS
Not for Resale

Section 2
SERVICE CONDITIONS

2.1 GENERAL

Service conditions, other than those specified as usual, may have a detrimental effect on the welding apparatus. Such an effect depends upon the degree of departure from usual operating conditions and the severity of the environment to which the apparatus is exposed. Of principal concern are unusual service conditions which might cause abnormal deterioration of the insulation system, electrical breakdown or mechanical wear, resulting in premature failure.

Although past experience of the user may often be the best guide, the manufacturer of the welding equipment should be consulted for further information regarding any unusual service conditions which may increase the mechanical or thermal stresses on the equipment and, as a result, increase the chances for failure and possible hazard.

Authorized Engineering Information 11-6-1975.

2.2 USUAL SERVICE CONDITIONS

Equipment conforming to these standards shall be capable of operating in accordance with its rating under the following conditions:

1. Where the ambient temperature is in the rage of 0°C to 40°C.
2. Where the altitude is between sea level and 3300 feet (1000 meters).
3. When exposed to gases and dust produced by the welding arc.
4. When the input control voltage varies within ± 10 percent of input control voltage rating of the equipment.
5. When the input control frequency varies within ±10 percent of the input control voltage frequency rating of the equipment.

NEMA Standard 1-11-1983.

2.3 UNUSUAL SERVICE CONDITIONS

The manufacturer should be consulted if any unusual service conditions exist. Among such conditions are exposure to:

1. Combustible or conducting dusts.
2. Chemical fumes or flammable gases.
3. Rain, steam, or oil vapor.
4. Vermin infestation or atmosphere conducive to the growth of fungus.
5. Very dirty, corrosive, explosive, or abrasive environments.
6. High radiant or conducted heat.
7. Abnormal shock or vibration.
8. Nuclear radiation.
9. Severe weather conditions.
10. Seacoast and ship board conditions.
11. Continuous average relative humidity above 90 percent or below 10 percent.
12. Altitudes in excess of 3300 feet (1000 meters).

Authorized Engineering Information 1-11-1983.

Copyright National Electrical Manufacturers Association
Provided by IHS under license with NEMA
No reproduction or networking permitted without license from IHS
Not for Resale

Section 3
MECHANICAL CONSTRUCTION REQUIREMENTS

3.1 FRAMES AND ENCLOSURES – GENERAL STRENGTH CONSIDERATIONS

The frames and enclosures of a wire feed system and its elements shall be so formed and assembled that they will have the strength and rigidity necessary to withstand the normal service to which they are likely to be subjected without increasing the fire, shock, or other hazard of the system.

NEMA Standard 1-11-1983.

3.2 ENCLOSURE OF LIVE PARTS

Electrical parts, except those parts connected to the welding circuit, shall be so enclosed or located as to provide protection against accidental contact with uninsulated live parts.

NEMA Standard 11-17-1989.

3.3 OPENINGS IN ENCLOSURES

The suitability of an opening in the enclosure shall be determined in accordance with 3.3.1 and 3.3.2.

Any part of the outer enclosure that is intended to be opened or removed, without the use of tools, by the user of the equipment (to permit the attachment of accessories, to allow access to means for making operating adjustments, or for other reasons) shall be opened or removed prior to examination. The components of the welding power circuit on parts of the system that are not normally held by hand shall not be considered during this examination.

The components of the welding power circuit on the gun assembly or other parts that are normally held by hand shall be enclosed so as to comply with 3.3.1, except that these enclosures may be removable without the use of a tool. The contact tube area of the gun assembly shall not be considered during this examination.

NEMA Standard 11-17-1989.

3.3.1 Gun Assembly

An opening in the handle or housing of a gun assembly which is supported by hand during normal use shall meet the requirements of this standard if the probe illustrated in Figure 3-1, with a diameter D of 3⁄8 inch (9.53 mm), cannot be made to touch any uninsulated live part or film-coated wire when it is inserted point first into the opening to a maximum distance of 1 inch.

NEMA Standard 11-17-1989.

3.3.2 Openings in Apparatus Other Than the Gun Assembly

Openings in apparatus other than the gun assembly shall be judged as follows:

1. An opening that will permit entrance of a 0.750 inch (19 millimeter) diameter rod shall be suitable if there is no film-coated wire, uninsulated live part(s), hazardous moving part(s) or any combination thereof: (1) less than x inches (x millimeters) from the perimeter of the opening, or (2) within the volume generated by projecting the perimeter x inches (x millimeters) normal to its plane when x equals five times the diameter of the largest diameter rod [but not less than 4 inches (101.6 millimeters)] that can be inserted through the opening. (See Figure 3-2.)
2. An opening which will not admit a 3⁄4 inch (19.05 mm) diameter rod shall meet the requirements of this standard if:
   a. The probe illustrated in Figure 3-1, with a diameter D of 1⁄2 inch (12.70 mm) cannot be made to touch film-coated wire when inserted through the opening, and
   b. The probe illustrated in Figure 3-3 cannot be made to touch any uninsulated live parts when inserted through the opening.

NEMA Standard 11-17-1989.

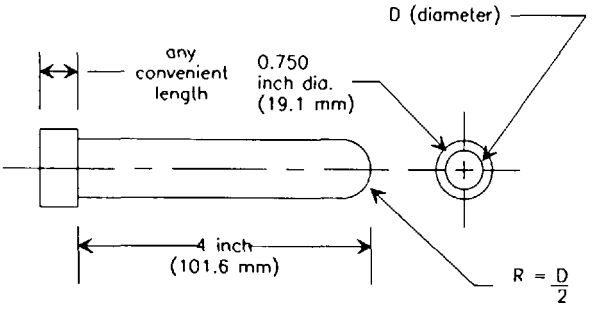

Figure 3-1
PROBE

3.4 ENCLOSURE CONSTRUCTION

Enclosures shall be constructed of either sheet metal or an insulating material.

If the enclosure is constructed from sheet metal, the thickness shall not be less than that given in Table 3-1.

If the enclosure is constructed of insulating material, the material shall meet the requirements for Class 94V-0 of the Underwriters Laboratories' UL 94, *Tests for Flammability of Plastic Materials for Parts in Devices and*

Copyright National Electrical Manufacturers Association
Provided by IHS under license with NEMA
No reproduction or networking permitted without license from IHS
Not for Resale

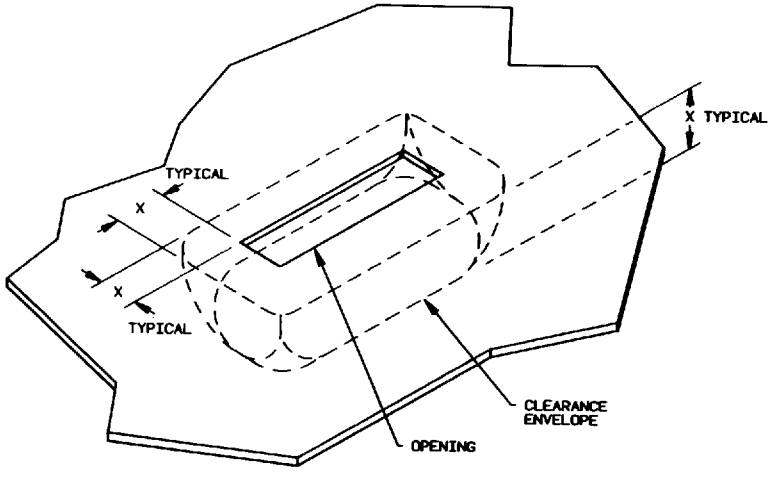

Figure 3-2
ENCLOSURE OPENING

Appliances. The enclosure shall have a mechanical strength at least equivalent to a sheet metal enclosure which is constructed in accordance with Table 3-1.

3.5 ROTATING PARTS

Rotating parts, such as motors, pulleys, belts, gears, drive rolls, etc., shall be so designed, enclosed, or guarded as to prevent accidental injury to personnel.

NEMA Standard 11-6-1975.

3.6 FILLER WIRE SUPPLY

The mounting of the filler wire supply, if integral with the wire feed unit, shall be so constructed as to have the strength and rigidity necessary to withstand the abuse to which it is likely to be subjected when fully loaded. Retaining means for the filler wire supply shall be so designed that the rotation and stops normally encountered will not in any way cause the filler wire supply to come loose. The supply or its mounting shall be insulated from the frame or enclosure of the wire feed unit.

NEMA Standard 11-6-1975.

3.7 CORROSION PROTECTION

Iron and steel parts, except bearings and other parts where protection is impractical, shall be suitably protected against corrosion if the deterioration of such unprotected parts would be likely to result in a hazardous condition.

NEMA Standard 11-6-1975.

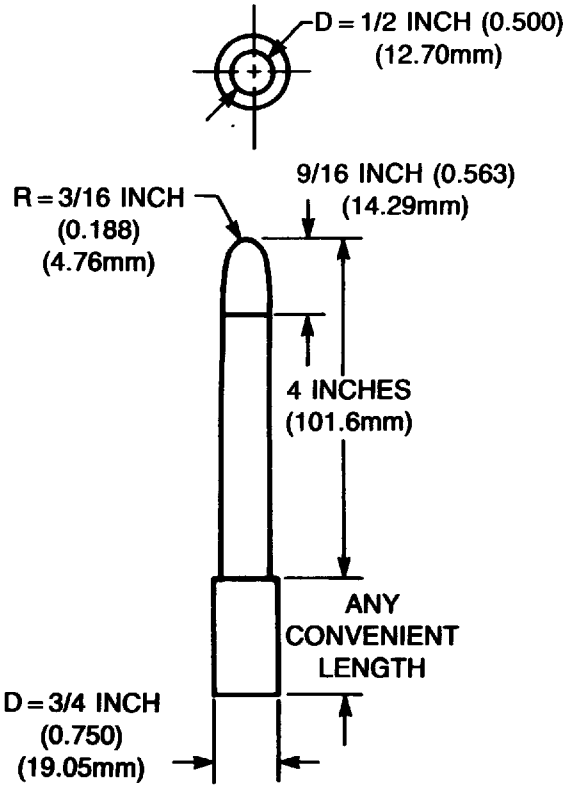

Figure 3-3
PROBE

Copyright National Electrical Manufacturers Association
Provided by IHS under license with NEMA
No reproduction or networking permitted without license from IHS
Not for Resale

Table 3-1
Thickness of Sheet Metal for Enclosures, Inches (mm)

Maximum Area of Any Surface	Maximum Dimension	Steel				Copper, Brass, Aluminum & Perforated & Expanded Steel	
		Without Supporting Frame		With Supporting Frame or Equivalent Reinforcing		Without Supporting Frame	With Supporting Frame or Equivalent Reinforcing
Sq. inches (Sq. mm)	Inches(mm)	Zinc Coated	Uncoated	Zinc Coated	Uncoated		
6* (38.7×10^2mm^2)	3 (76)	0.023 (0.58)	0.020 (0.51)	0.023 (0.58)	0.020 (0.51)	0.023 (0.58)	0.023 (0.58)
36 (232×10^2mm^2)	8 (203)	0.029 (0.74)	0.026 (0.66)	0.023 (0.58)	0.020 (0.51)	0.036 (0.91)	0.029 (0.74)
90 (581×10^2mm^2)	12 (305)	0.034 (0.86)	0.032 (0.81)	0.023 (0.58)	0.020 (0.51)	0.045 (1.14)	0.029 (0.74)
135 (871×10^2mm^2)	18 (457)	0.045 (1.14)	0.042 (1.07)	0.034 (0.86)	0.032 (0.81)	0.058 (1.47)	0.045 (1.14)
360 (2322×10^2mm^2)	24 (610)	0.056 (1.42)	0.053 (1.35)	0.045 (1.14)	0.042 (1.07)	0.075 (1.90)	0.058 (1.47)
1200 (7741×10^2mm^2)	48 (1219)	0.070 (1.78)	0.067 (1.70)	0.056 (1.43)	0.053 (1.35)	0.095 (2.41)	0.075 (1.90)

*Volume of enclosure shall be not more than 12 cubic inches (19.6×10^{-5}m^3).

3.8 SERVICE LINE HOSES

If supplied as part of the welding wire feed system and external to the enclosure, service line hoses and hose connection shall comply with the Rubber Manufacturers Association's referenced standards.

NEMA Standard 11-15-1991.

3.9 GUN ASSEMBLY

The materials used in the gun assembly shall be such that they will not be decomposed by the heat and radiation of the arc, thus resulting in dangerous levels of known toxic substances.

NEMA Standard 11-6-1975.

3.10 WATER COOLING

Any device or system which uses water for cooling shall be capable of operating at an inlet water pressure ranging from 30 psi (207kPa) to 75 psi (517kPa) and a water inlet temperature up to 49°C. For rating purposes, the water inlet pressure shall be 30 psi (207kPa) at a water inlet temperature of 49°C.

NEMA Standard 11-6-1975.

3.11 DROP TESTING

3.11.1 Handles, eyes or lugs, which are provided for the purpose of lifting an assembled wire feed unit or system, shall be capable of withstanding a free-fall jerk test. This test shall be conducted with the maximum weight of filler wire and shielding medium recommended if such storage means are provided as a part of the assembled unit or system. To conduct this test, the unit or system shall be suspended aloft from a rigid member by a chain or cable attached to the lifting device. The unit or system shall be positioned above and away from any surface that it might strike during the test process.

The chain or cable suspension assembly shall be arranged so that a free fall of at least 6 inches (152.4 mm) takes place before the unit is caught in suspension, bringing the full force to bear on the lifting device. Three such falls shall be made.

3.11.2 An assembled wire feed unit or system, complete with the full storage means described in 3.11.1, shall be capable of withstanding a drop test. This test shall consist of three drops onto a hard and rigid surface from a height of not less than 6 inches (152.4 mm). These drops shall be so arranged that each drop will strike the unit or system on a bottom edge different from that of any other drop.

3.11.3 After the foregoing tests, the assembled wire feed unit or system shall meet the requirements of this publication (other than 3.11.1 and 3.11.2) in all respects, even though there may be some deformation of the structural or case parts.

NEMA Standard 11.17-1989.

Copyright National Electrical Manufacturers Association
Provided by IHS under license with NEMA
No reproduction or networking permitted without license from IHS
Not for Resale

Section 4
ELECTRICAL CONSTRUCTION REQUIREMENTS

4.1 SERVICE LINE CORDS, CABLES, AND CONNECTIONS EXTERNAL TO THE ENCLOSURE

4.1.1 Welding current cables shall be of the flexible type, specifically designed and constructed to withstand the rigors of welding service, and of a size adequate to carry the rated current.

NEMA Standard 11-6-1975.

4.1.2 Flexible cords shall be Type S, SO, SJ, or SJO and shall have a current carrying capacity not less than the current rating of the circuit at its rated duty cycle.

NEMA Standard 11-17-1989.

4.1.3 Strain relief shall be provided for flexible cords and shall be capable of withstanding a 35 pound (156 N) tensile force for a period of 1 minute without transmitting mechanical strain to terminals, splices, or interior wiring.

NEMA Standard 11-17-1989.

4.1.4 Means shall be provided to prevent flexible cords from being pushed into the enclosure through the cord-entry hole if such displacement is likely to (1) subject the cord to mechanical damage, (2) expose the cord to a temperature higher than that for which it is suitable, or (3) reduce spacings (such as to a metal strain relief clamp) below the values given elsewhere in this publication.

NEMA Standard 11-6-1975.

4.2 WIRE FEED UNIT AND CONTROL

4.2.1 Input Control Voltage Rating

Where the wire feed unit and control are not within the enclosure of the welding power source, the input control voltage rating of the wire feed system shall not exceed 115 volts rms.

NEMA Standard 11-17-1989.

4.2.2 Selection of Electrical Components

Electrical components shall be selected so that their rated temperature will not be exceeded when the wire feed system is operating at rated load under usual service conditions and so that their electrical ratings are suitable for the application.

NEMA Standard 11-17-1989.

4.2.3 Internal Wiring

The internal wiring shall consist of wires which are recognized for the particular application with respect to the temperature, current, voltage, exposure to oil or grease, and other conditions of service to which they are likely to be subjected.

The wiring shall be so arranged or protected that no damage to the conductor insulation will occur from contact with any rough, sharp, or moving part.

All joints and connections shall be mechanically secure and shall provide adequate and reliable electrical contact without mechanical strain.

An uninsulated conductor, if used within an enclosure, shall be so supported that the spacings given elsewhere in this publication will be maintained.

NEMA Standard 11-17-1989.

4.2.4 Mounting of Current Carrying Parts

Insulating washers, bushings, sheets, etc., for the mounting or insulation of current carrying parts shall be of moisture-resistant material which will not be damaged by the temperature to which they will be subjected during operation at rated load under usual service conditions.

NEMA Standard 11-17-1989.

4.2.5 Spacings

Spacings through air or over surfaces between an uninsulated live part and metallic enclosure or frame shall be not less than 1/8 inch (3.2 mm).

Spacings through air or over surfaces between live uninsulated wiring terminals with a difference in potential shall be not less than 1/8 inch (3.2 mm).

The foregoing spacings shall not apply to wiring devices, connectors, switches, lamp holders, printed circuit boards, motors or other components for which spacings are given in the standards covering such components.

NEMA Standard 11-17-1989.

4.2.6 Grounding

All exposed non-current carrying metal parts which are likely to become energized by input control power (other than that from the welding power circuit) under abnormal conditions shall have metal-to-metal contact or be otherwise electrically bonded together and shall be provided with a means for grounding. The grounding means shall be secured to the frame or enclosure by a screw or fastening that is not likely to be removed during any servicing operation other than the removal of the service line. Solder alone shall not be used for securing the grounding means.

NEMA Standard 11-17-1989.

Previous page is blank.

Copyright National Electrical Manufacturers Association
Provided by IHS under license with NEMA
No reproduction or networking permitted without license from IHS
Not for Resale

4.2.7 Overload Protection

Fuses, circuit breakers and similar devices shall be provided to limit electrical control power during protracted periods in the internal wiring or electrical components of the unit that would cause fire or other hazardous conditions.

NEMA Standard 1-11-1983.

4.3 GUN ASSEMBLY AND GUN CABLE ASSEMBLY

4.3.1 Except where the wire feed system is powered only from the welding power circuit, the voltage of any gun switch circuit shall be supplied from an isolated voltage source and shall not exceed 35 volts rms or 50 volts direct current. When the wire feed system is powered only from the welding arc, the voltage of any gun switch circuit shall not exceed the open circuit voltage rating of the welding power source.

4.3.2 Since the grounding of exposed metal parts on the gun assembly may constitute a hazard, such parts shall not be grounded.

4.3.3 Spacings through air or over surfaces between uninsulated live metal parts and exposed dead metal parts shall be not less than 1/16 inch (1.6 mm).

Spacings through air or over surfaces between live uninsulated metal parts with a difference in potential shall be not less than 1/16 inch (1.6 mm).

The foregoing spacings shall not apply to wiring devices, connectors, switches, lamp holders, printed circuit boards, motors, or other components for which spacings are given in the standards covering such components.

4.3.4 The insulation of current carrying parts shall be of moisture-resistant material which will not be damaged by the temperature to which the parts will be subjected when they are operating at rated load under usual service conditions.

NEMA Standard 11-17-1989.

4.3.5 Supply Lines

4.3.5.1 The cable which carries welding current to the gun assembly, whether water cooled or convection cooled or incorporated into a unified assembly, shall be selected so that the surface temperature of the cable or unified assembly will not exceed the temperatures given in Table 5-1. The test shall be made in accordance with 5.3.1.2.

NEMA Standard 11-17-1989.

4.3.5.2 Flexible control cords or control conductors shall be suitable for the particular application with respect to the temperature, current, voltage, exposure to oil and grease, and other conditions of service to which they are likely to be subjected. The connection at each end of the control cords or control conductors shall prevent any mechanical stress from being transmitted to the terminals, splices, or interior wiring of the gun assembly or wire feed unit.

Means shall be provided to prevent flexible control cords or control conductors from being pushed into the enclosure through the cord-entry hole if such displacement is likely to (a) subject the cord or conductor to mechanical damage or (b) expose the cord or conductor to a temperature higher than that for which it is suitable or (c) reduce spacings (such as to a metal strain relief clamp) below the values given elsewhere in this publication.

NEMA Standard 11-6-1975.

4.4 HIGH-POTENTIAL TEST AND INSULATION RESISTANCE

4.4.1 High-Potential Test

Each electrical circuit of wire feed system shall be capable of withstanding for 1 minute, without breakdown, the application of a 60-hertz essentially sinusoidal test voltage of 1000 volts plus twice the rated voltage of the circuit. Alternatively, for production-line testing, a test voltage which is 20 percent greater than that used for a 1 minute test shall be applied for 1 second.

The test voltage shall be applied successively between each input circuit and the enclosure and between each output circuit and the enclosure, with circuits not under test connected to the enclosure.

Circuit interrupters such as relays, switches, etc., shall be bridged during the test so that the entire circuitry is tested. The welding power circuit, including all metal parts such as drive rolls, filler wire guides, filler wire supply means, etc., contacting the welding power circuit, shall be considered as a separate input circuit.

The high-potential test shall be made as a part of the manufacturer's tests on new and completely assembled machines.

Devices such as meters, rectifiers, capacitors, lamp holders, switches, fractional-horsepower motors, rheostats, electronic equipment, ground detectors, etc., which do not fall within the scope of this publication but for which there are standards for high-potential tests and which require lower test voltages than called for in this publication, shall be grounded, short-circuited or disconnected before the high-potential tests are made.

NEMA Standard 11-17-1989.

4.4.2 Insulation Resistance

The insulation resistance of the gun assembly and other parts which are normally held by hand shall be not less than 1.0 megohm when a dc test voltage of 500 volts

Copyright National Electrical Manufacturers Association
Provided by IHS under license with NEMA
No reproduction or networking permitted without license from IHS
Not for Resale

is applied between live parts and the external surfaces which are normally touched during the welding process.

Prior to being tested, a sample unit shall be kept in an enclosure for 48 hours at room temperature and at a relative humidity of 90 to 95 percent. Immediately upon its removal from the enclosure, the unit shall be wrapped in metal foil. The foil shall be in intimate contact with the handle and with all exposed metal parts which are normally accessible. A dc test voltage of 500 volts shall be applied between the foil and the live parts of the welding power and control circuits.

NEMA Standard 11-6-1975.

Copyright National Electrical Manufacturers Association
Provided by IHS under license with NEMA
No reproduction or networking permitted without license from IHS
Not for Resale

Section 5
RATING AND PERFORMANCE

5.1 RATING OF WIRE FEED SYSTEM

The rating of a wire feed system and its elements shall include the minimum information listed below. The rating of a wire feed system element shall include the information listed below where applicable.

1. Rated current.
2. Maximum and minimum filler wire-size.
3. Types of filler wire.
4. Rated speed range for each size of filler wire.
5. Duty cycle.
6. Input control voltage, current, and frequency.
7. Shielding gas(es).

NEMA Standard 1-11-1983.

5.2 PERFORMANCE

5.2.1 Feeding

The wire feed system shall be capable of feeding through the gun and gun cable assemblies in a smooth and uniform manner each size and type of filler wire over its rated speed range as recommended by the manufacturer under the following conditions:

1. The filler wire conduit, when used, shall be positioned so as to have a 12 inch (0.3 meter) radius loop beginning at the wire feeder. If the conduit is long enough to form one complete loop, any remaining length shall be straight.
2. If the filler wire supply has an overrun limiting device, the device shall be adjusted so that not more than 40 degrees of spool rotation will take place when the wire feed unit is stopped, with the maximum amount of filler wire stored on the spool.
3. Usual service conditions, see 2.2.
4. All components are in place, adjusted, and in the condition in which they are normally supplied for welding.

NEMA Standard 11-17-1989.

5.2.2 Loading

Under the conditions outlined in 5.2.1 and with the filler wire size and rated speed that produces the most severe loading conditions within the rating of the wire feed unit, the loading on the unit shall be not greater than 75 percent of maximum load.

NEMA Standard 1-11-1983.

5.3 TEMPERAURE RISING

5.3.1 Wire Feed System

5.3.1.1 When a wire feed system is a separate unit, it shall be capable of operating indefinitely under maximum load at a repetitive duty cycle of 6 minutes on and 4 minutes off without causing any component to exceed its rated temperature. An arc welding power source with integral wire feed unit shall be capable of operating indefinitely at its rated current and duty cycle without causing any component to exceed its rated temperature. However, for water-cooled aparatus, see 3.10.

NEMA Standard 11-15-1991.

Under these conditions, the temperature on any external surface that may be contacted by the user (other than those parts of the gun assembly from the handle to the end of the contact tube or nozzle) shall not exceed the values given in Table 5-1 at an ambient temperature of 25°C. If the test is conducted at an ambient temperature other than 25°C, the results shall be corrected to 25°C.

NEMA Standard 11-17-1989.

Table 5-1
MAXIMUM TEMPERATURES ON EXTERNAL SURFACES

Location and/or Type of Surface	Composition of Surface	
	Metallic	Non-metallic
1. Handle or knob grasped for lifting, carrying, or holding:	50°C	60°C
2. Handle, knob, or surface of the enclosure that is intended to be contacted during normal use but does not require continuous holding:	60°C	85°C
3. Surface subjected to casual contact:	70°C	95°C

5.3.1.2 Additionally, the wire feed system shall meet the requirements of 5.3.1.1 when it is cycled for 4 seconds on and 2 seconds off during the 6 minute on time of the duty cycle specified in 5.3.1.1.

5.3.2 Gun and Gun Cable Assemblies

The testing of the gun and gun cable assemblies for the temperatures specified in 5.3.1 shall be conducted as follows:

1. A weld bead shall be deposited on a horizontal work surface which may be water cooled.
2. The rate of travel shall be selected so that a continuous following weld pool is maintained.
3. The filler wire entering the weld pool shall be perpendicular to the horizontal surface and the gun assembly handle shall be 90 degrees from the direction of travel.

Copyright National Electrical Manufacturers Association
Provided by IHS under license with NEMA
No reproduction or networking permitted without license from IHS
Not for Resale

4. Welding parameters shall be those shown in:
   Figure 5-1, Part 1—for flux cored arc welding without gas.
   Figure 5-1, Part 2—for flux cored arc welding with CO_2 gas.
   Figure 5-2, Part 1—for gas metal arc welding with CO_2 gas and solid electrode.
   Figure 5-3— for gas-tungsten arc welding with filler wire.
   The welding voltage shown on the curves in Figures 5-1 and 5-2 is measured from the gun assembly to the work. Welding process parameters have a tolerance of plus or minus five percent.
5. For validating the rated current of the gun and gun cable assembly for submerged arc welding, the electrode shall be copper-coated (see AWS A5.17) and welding polarity shall be electrode positive.
6. In each case, the test shall be run with that filler wire size within the rated range of the gun and gun cable assembly that produces the highest temperature.

NEMA Standard 1-11-1983.

5.4 OTHER PERFORMANCE DATA

5.4.1 When performance data is given for other gases (see 5.4.3 and Figure 5-2, Part 2), or other duty cycles, or both, in addition to the specified 60 percent duty cycle, the tests performed shall comply with the procedures and limits as given in this publication in all other respects.

NEMA Standard 11-17-1989.

5.4.2 When performance data is given for the maximum regulation of filler wire speed with respect to load, to input control voltage, and to warm up, it shall be calculated as follows:

1. Maximum Regulation of Filler Wire Feed Speed With Respect to Load

The maximum variation in wire feed speed at any present speed within the rated speed range shall be determined by:

$$\left(\frac{S_1 - S_2}{S_2}\right) \times 100 = {}^{R}(\text{Load})$$

where—

^{R}(Load) = Speed regulation due to load change (in percent).
S_1 = Wire feed speed at 1/2 maximum load.
S_2 = Wire feed speed at maximum load.

The wire feed unit and wire feed control shall be operated for at least 1/2 hour at 1/2 their maximum load before making this test.

2. Maximum Regulation of Filler Wire Feed Speed with Respect to Input Control Voltage (ICV)

The maximum variation in wire feed speed throughout all loads and speeds within the rated speed range when the input control voltage is varied within plus or minus 10 percent of the rated input control voltage shall be determined by:

$$\left(\frac{S_1 - S_2}{S_2}\right) \times 100 = {}^{R}(\text{ICV})$$

where —

^{R}(ICV) = Speed regulation due to ICV change (in percent)
S_1 = Wire feed speed at ± 10 percent of rated ICV.
S_2 = Wire feed speed at rated ICV.

The wire feed unit and wire feed control shall be operated for at least 1/2 hour at 1/2 their maximum load before making this test.

NEMA Standard 11-17-1989.

3. Maximum Regulation of Filler Wire Feed Speed with Respect to Warm-Up

The maximum variation in wire feed speed at maximum load throughout the rated speed range due to the rise in the temperature of components from the ambient temperature to the operating temperature shall be determined by:

$$\left(\frac{S_1 - S_2}{S_2}\right) \times 100 = {}^{R}(\text{T.Rise})$$

where —

^{R}(T. Rise) = Speed regulation due to temperature rise (in percent)
S_1 = Wire feed speed at ambient temperature.
S_2 = Wire feed speed at operating temperature.

The ambient temperature shall be stated and maintained within a tolerance of ±5°C (9°F).

NEMA Standard 11-6-1975.

5.4.3 Other Ratings

When gun and cable assembly are to be rated for argon enriched gases, the welding parameters shall be those shown in Figure 5-2, Part 2, Gas Metal Arc Welding with Argon Gas and Solid Electrode.

NEMA Standard 11-17-1989.

Copyright National Electrical Manufacturers Association
Provided by IHS under license with NEMA
No reproduction or networking permitted without license from IHS
Not for Resale

Section 6
MARKINGS

6.1 WIRE FEED NAMEPLATE

The wire feed unit, or the major element of the system when not part of an arc welding power source with integral wire feed unit, shall be plainly marked in a location where the markings will be readily visible, with the following minimum information:

1. Manufacturer's name and model number.
2. Input control voltage.
3. Input control frequency.
4. Input control current in amperes at maximum load.
5. The words "NEMA EW 3."

NEMA Standard 11-15-1991.

6.2 GUN ASSEMBLY OR GUN CABLE ASSEMBLY MARKING

Any gun assembly or gun cable assembly designed for use with feed systems, which can be used with arc welding power sources of different output ratings shall have a single marking located where it will be readily visible and plainly marked with the following minimum information: (See 5.3)

1. Welding current rating in amperes at 60 percent duty cycle.
2. The words "60 Percent Duty Cycle-CO_2" for guns designed for use with gas or the words "60 Percent Duty Cycle" for guns designed for use without gas. If abbreviated, Duty Cycle shall be shown as "D/C."
3. The words "NEMA EW 3."

NEMA Standard 11-15-1991.

Copyright National Electrical Manufacturers Association
Provided by IHS under license with NEMA
No reproduction or networking permitted without license from IHS
Not for Resale

FIG. 5-1 PART 1
FLUX CORED ARC WELDING WITHOUT GAS

FOR VALIDATING THE RATED CURRENT OF THE GUN AND CABLE ASSEMBLY, THE WORST CASE CONDITION TAKEN FROM THE CURVES BELOW SHALL BE USED.

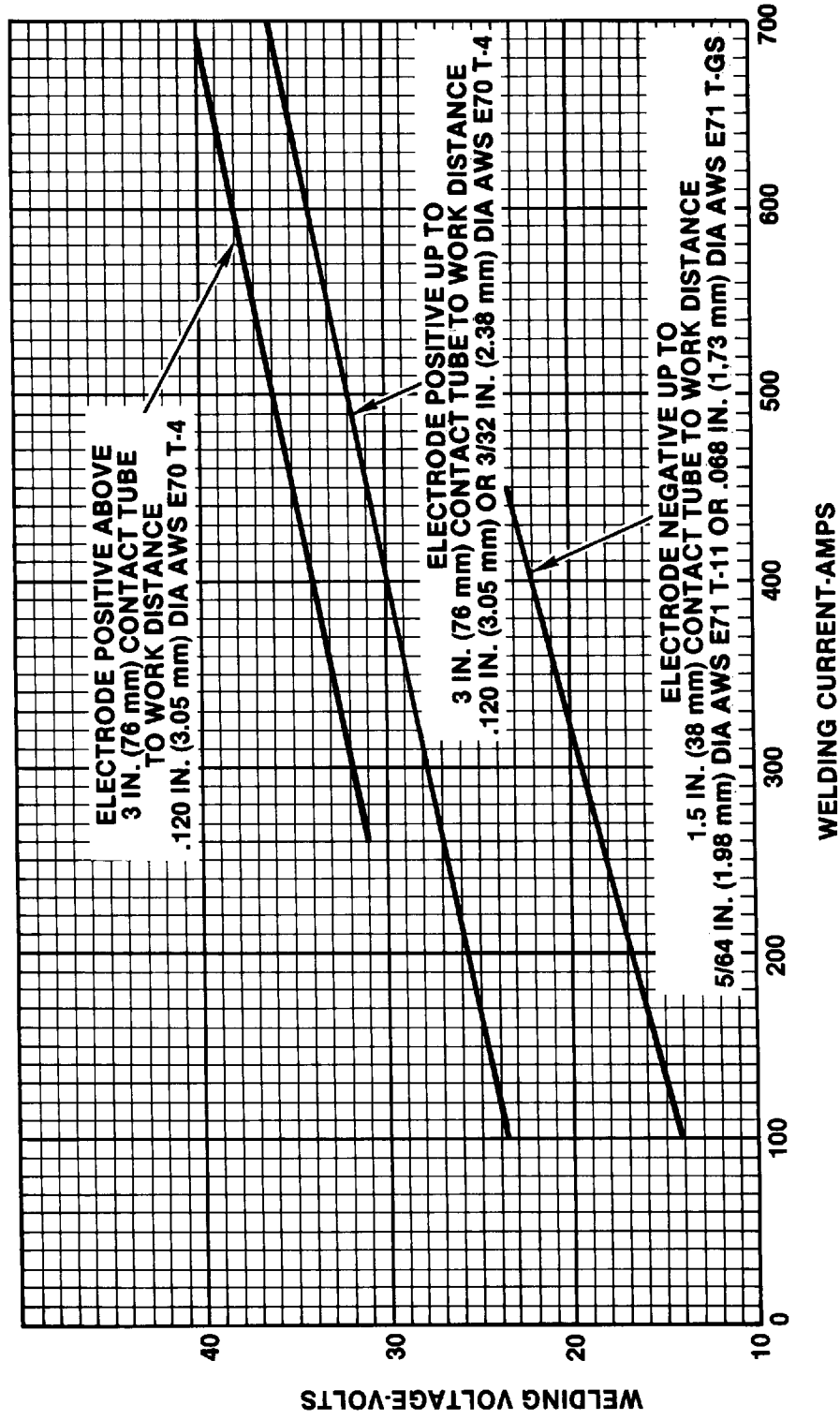

Copyright National Electrical Manufacturers Association
Provided by IHS under license with NEMA
No reproduction or networking permitted without license from IHS
Not for Resale

FIG. 5-1 PART 2

FLUX CORED ARC WELDING WITH CO_2 GAS

FOR VALIDATING THE RATED CURRENT OF THE GUN AND CABLE ASSEMBLY, THE WORST CASE CONDITION TAKEN FROM THE CURVES BELOW SHALL BE USED.

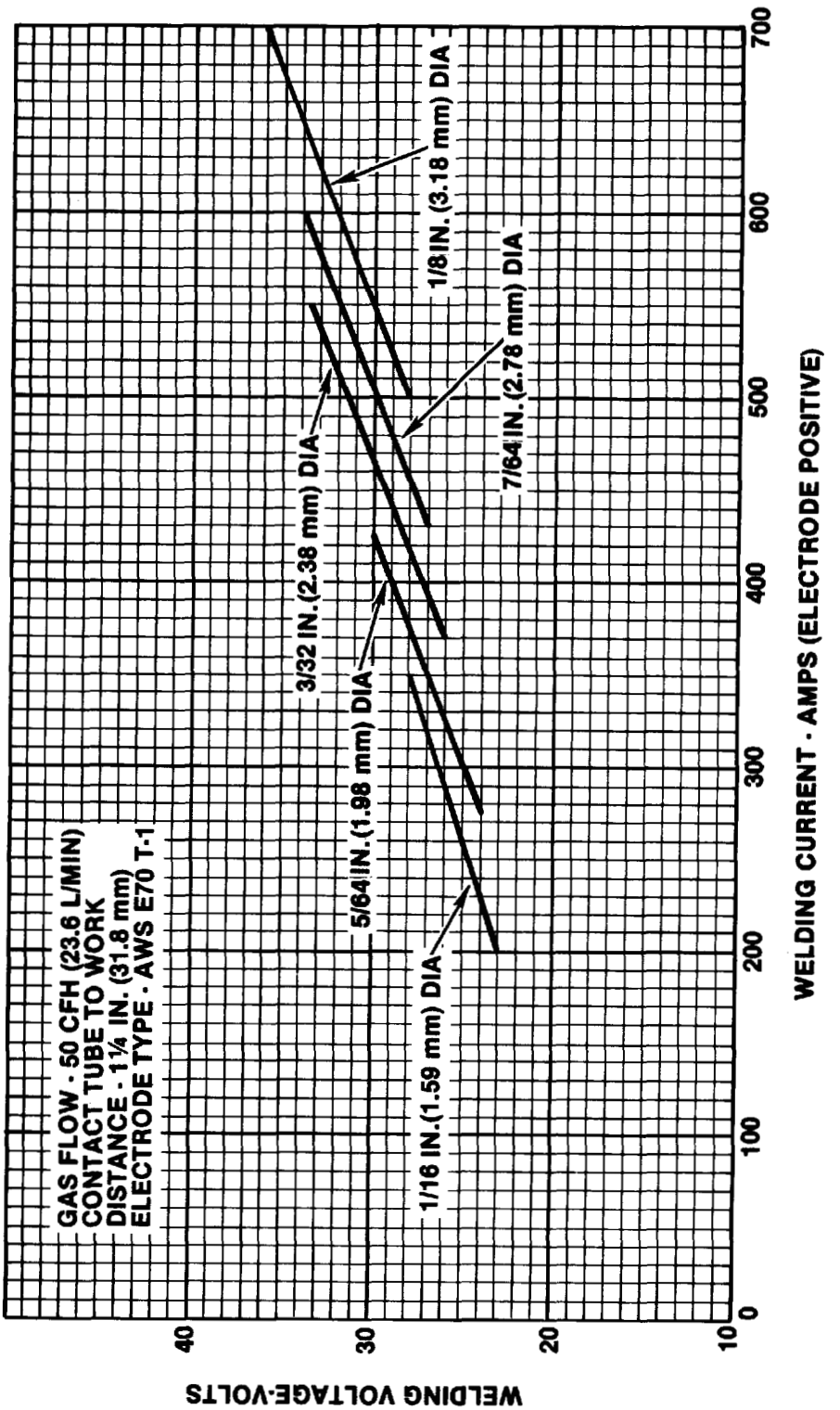

Copyright National Electrical Manufacturers Association
Provided by IHS under license with NEMA
No reproduction or networking permitted without license from IHS
Not for Resale

FIG. 5-2 PART 1

GAS METAL ARC WELDING WITH CO_2 GAS AND SOLID ELECTRODE

FOR VALIDATING THE RATED CURRENT OF THE GUN AND CABLE ASSEMBLY, THE WORST CASE CONDITION TAKEN FROM THE CURVES BELOW SHALL BE USED.

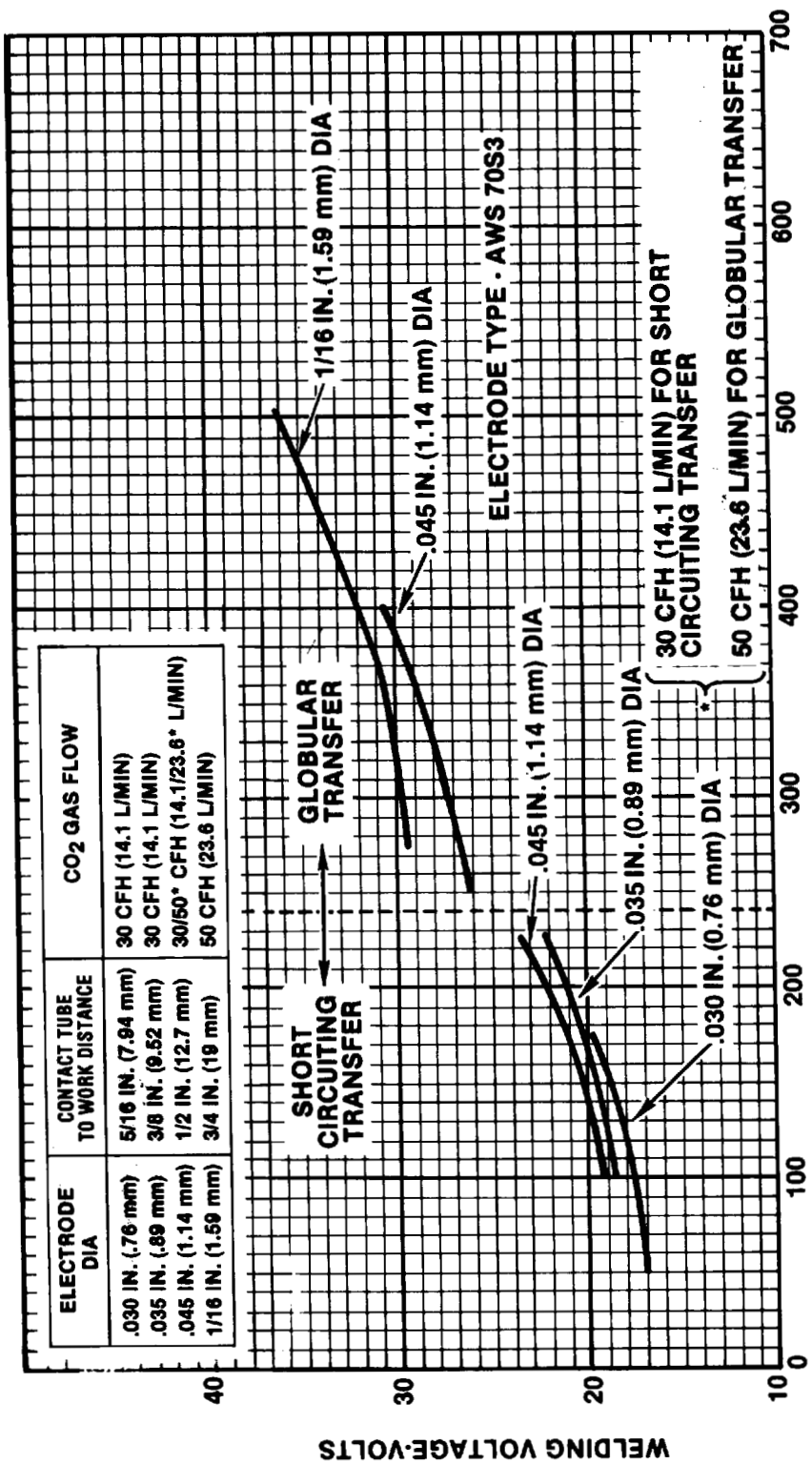

Copyright National Electrical Manufacturers Association
Provided by IHS under license with NEMA
No reproduction or networking permitted without license from IHS
Not for Resale

FIG. 5-2 PART 2

GAS METAL ARC WELDING WITH ARGON GAS AND SOLID ELECTRODE

FOR VALIDATING THE RATED CURRENT OF THE GUN AND CABLE ASSEMBLY, THE WORST CASE CONDITION TAKEN FROM THE CURVES BELOW SHALL BE USED.

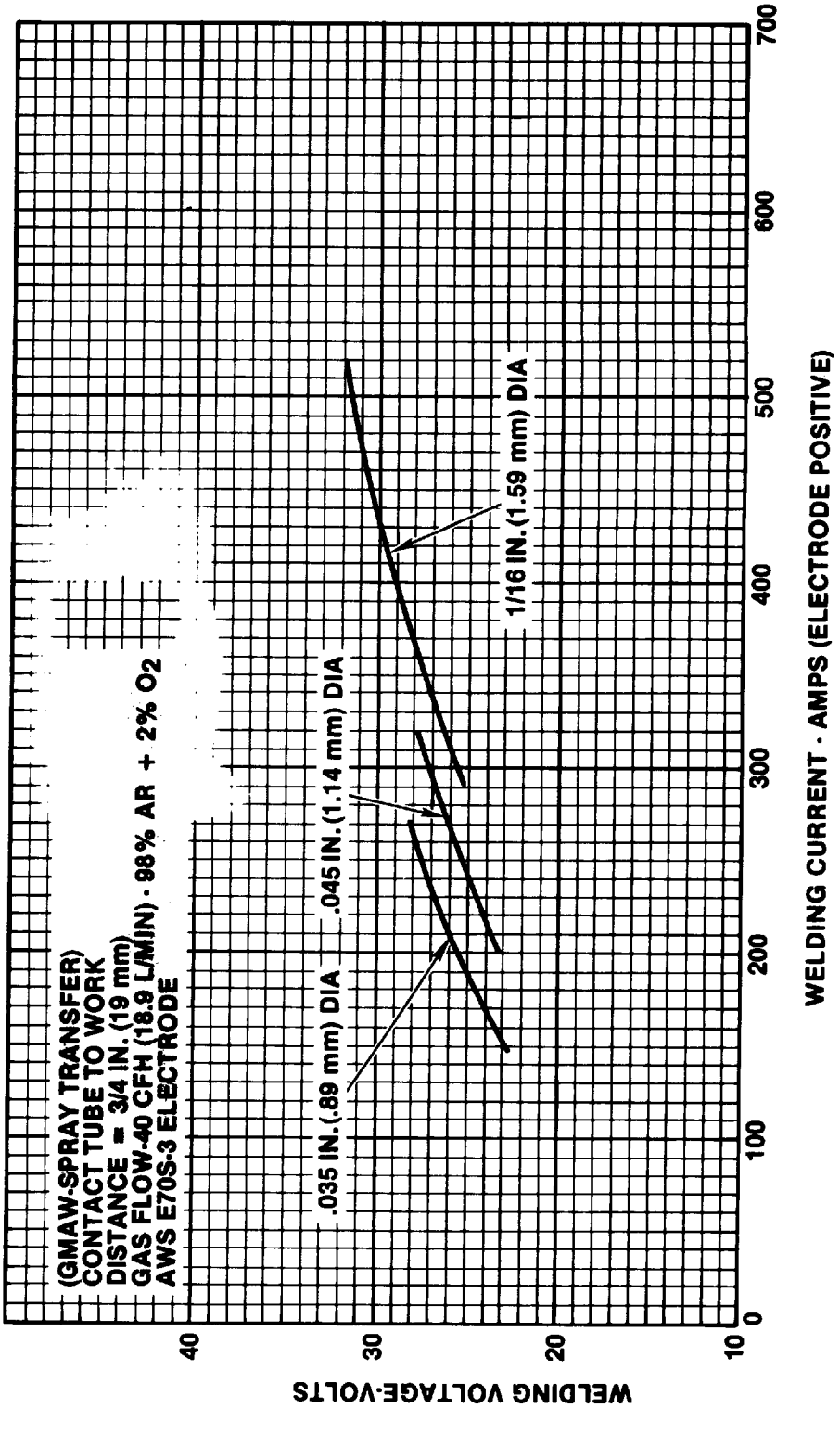

Copyright National Electrical Manufacturers Association
Provided by IHS under license with NEMA
No reproduction or networking permitted without license from IHS
Not for Resale

FIG. 5-3

GAS TUNGSTEN ARC WELDING WITH FILLER WIRE

FOR VALIDATING THE RATED CURRENT OF THE GUN AND CABLE ASSEMBLY, THE FOLLOWING PARAMETERS SHALL BE USED.

WIRE: .035 IN. (0.89 mm) DIA. STAINLESS STEEL AWS E-308.
TUNGSTEN DIA: .093 IN. (2.36 mm) THORIATED.

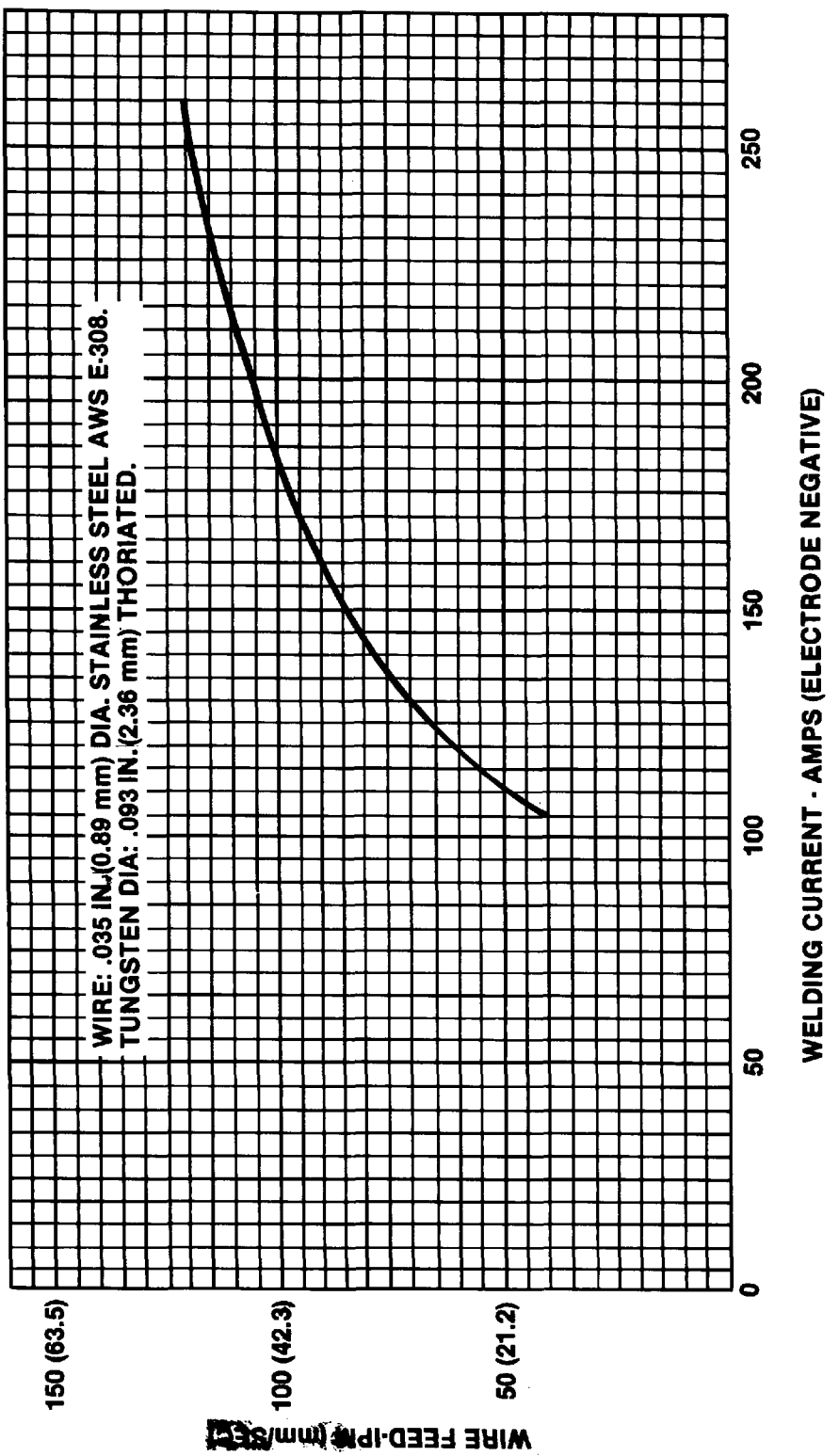

Copyright National Electrical Manufacturers Association
Provided by IHS under license with NEMA
No reproduction or networking permitted without license from IHS
Not for Resale

NEMA STANDARDIZATION

The purpose of NEMA Standards, their classification and status, are set forth in certain clauses of the NEMA *Standardization Policies and Procedures* manual and are referenced below.

Purpose of Standards

National Electrical Manufacturers Association standards are adopted in the public interest and are designed to eliminate misunderstandings between the manufacturer and the purchaser and to assist purchasers in selecting and obtaining the proper product for their particular needs. Existence of a National Electrical Manufacturers Association standard does not in any respect preclude any member or nonmember from manufacturing or selling products not conforming to the standard. *(Standardization Policies and Procedures, p. 1)*

Definition of a Standard

A standard of the National Electrical Manufacturers Association defines a product, process, or procedure with reference to one or more of the following: nomenclature, composition, construction, dimensions, tolerances, safety, operating characteristics, performance, rating, testing, and the service for which they are designed.
(Standardization Policies and Procedures, p. 2)

Dimensions

Where dimensions are given for interchangeability purposes, alternate dimensions satisfying the other provisions of the Standards Publication may be capable of otherwise equivalent performance.
(Standardization Policies and Procedures, p.8)

Categories of Standards

National Electrical Manufacturers Association Standards are of two classes:

1. NEMA Standard, which relates to a product, process, or procedure commercially standardized and subject to repetitive manufacture, which standard has been approved by at least 90 percent of the members of the Subdivision eligible to vote thereon;
2. Suggested Standard for Future Design, which may not have been regularly applied to a commercial product, but which suggests a sound engineering approach to future development, which standard has been approved by at least two-thirds of the members of the Subdivision eligible to vote thereon.

(Standardization Policies and Procedures, pp. 7 & 16)

Authorized Engineering Information

Authorized Engineering Information consists of explanatory data and other engineering information of an informative character not falling within the classification of NEMA Standard or Suggested Standard for Future Design, which standard has been approved by at least two-thirds of the members of the Subdivision eligible to vote on the standard.
(Standardization Policies and Procedures, pp. 7 & 16)

Official Standards Proposal

An Official Standards Proposal is an official draft of a proposed standard which is formally recommended to an outside organization(s) for consideration, comment, and/or approval, and which has been approved by at least 90 percent of the members of the Subdivision eligible to vote thereon.
(Standardization Policies and Procedures, pp. 7 & 16)

Identification of Status

Standards in NEMA Standards Publications are identified in the foreword or following each standard as "NEMA Standard" or "Suggested Standard for Future Design." These indicate the status of the standard. These words are followed by a date which indicates when the standard was adopted in its present form by the Association.

The material identified as "Authorized Engineering Information" and "Official Standards Proposal" is designated similarly.

Copyright National Electrical Manufacturers Association
Provided by IHS under license with NEMA
No reproduction or networking permitted without license from IHS
Not for Resale

ARC WELDING SECTION
OF THE
NATIONAL ELECTRICAL MANUFACTURERS ASSOCIATION

MEMBER COMPANIES

Alloy Rods Corporation
The ESAB Group
Hanover, PA 17331

Century Manufacturing Company
Minneapolis, MN 55431

C K Systematics, Inc.
Auburn, WA 98002

Harris Calorific Division
The Lincoln Electric Company
Gainesville, GA 30501

Hobart Brothers Company
Troy, OH 45373

Hypertherm, Incorporated
Hanover, NH 03755

Inco Alloys International, Inc.
Newton, NC 28658

The Lincoln Electric Company
Cleveland, OH 44117

L-TEC Welding & Cutting Systems
The ESAB Group
Florence, SC 29501

Miller Electric Mfg. Company
Appleton, WI 54912

National Standard Company
Niles, MI 49120

Pow Con, Inc.
San Diego, CA 92126

Sandvik Steel Company
Welding and Wire Division
Scranton, PA 18501

Teledyne McKay
York, PA 17405

Thernadyne Industries, Inc.
St. Louis, MO 63105

Copyright National Electrical Manufacturers Association
Provided by IHS under license with NEMA
No reproduction or networking permitted without license from IHS
Not for Resale