March 26, 1992

To: All Known Holders of EW 1

Subject: Revision No. 1 to NEMA Standards Publication for Electric Arc Welding Power Sources, NEMA Pub. No. **EW 1-1988**

Dear Sirs:

Revision No. 1, consisting of printed pages dated **NOVEMBER 1991**, is enclosed for insertion into your copy of the subject publication. Also enclosed is a title page to indicate that your book now contains Revision 1. Often the technical changes required in a standard cause material to shift. Therefore, to keep your document complete, you should remove and insert *all* pages as indicated.

Please **remove** the following pages from your copy and **replace** them as indicated:

Remove Page:	*Replace with Page:*
Title Page EW 1-1988	Title Page EW 1-1988 (Rev. 1)
Table of Contents	Table of Contents
iii	iii
Page 1-1988/2-1988	Page 1-1988/2-1991
Page 3-1988/4-1988	Page 3-1988/4-1988
Page 5-1988/6-1988	Page 5-1988/6-1991
Page 9-1988/10-1988	Page 9-1991/10-1988
Page 15-1988/16-1988	Page 15-1991/16-1988

Sincerely,

Christopher E. Smith
Publications Assistant Editor

Encl.: Revision No. 1 to **EW 1-1988**

Copyright National Electrical Manufacturers Association
Provided by IHS under license with NEMA
No reproduction or networking permitted without license from IHS
Not for Resale

EW 1

ELECTRIC ARC WELDING POWER SOURCES

Revision No. 1—November 1991

Published by:

National Electrical Manufacturers Association
2101 L Street, N.W.
Washington, DC 20037

© 1988 by National Electrical Manufacturers Association

Copyright National Electrical Manufacturers Association
Provided by IHS under license with NEMA
No reproduction or networking permitted without license from IHS
Not for Resale

NOTICE AND DISCLAIMER

The information in this publication was considered technically sound by the consensus of persons engaged in the development and approval of the document at the time it was developed. Consensus does not necessarily mean that there is unanimous agreement among every person participating in the development of this document.

The National Electrical Manufacturers Association (NEMA) standards and guideline publications, of which the document contained herein is one, are developed through a voluntary consensus standards development process. This process brings together volunteers and/or seeks out the views of persons who have an interest in the topic covered by this publication. While NEMA administers the process and establishes rules to promote fairness in the development of consensus, it does not write the document and it does not independently test, evaluate, or verify the accuracy or completeness of any information or the soundness of any judgments contained in its standards and guideline publications.

NEMA disclaims liability for any personal injury, property, or other damages of any nature whatsoever, whether special, indirect, consequential, or compensatory, directly or indirectly resulting from the publication, use of, application, or reliance on this document. NEMA disclaims and makes no guaranty or warranty, expressed or implied, as to the accuracy or completeness of any information published herein, and disclaims and makes no warranty that the information in this document will fulfill any of your particular purposes or needs. NEMA does not undertake to guarantee the performance of any individual manufacturer or seller's products or services by virtue of this standard or guide.

In publishing and making this document available, NEMA is not undertaking to render professional or other services for or on behalf of any person or entity, nor is NEMA undertaking to perform any duty owed by any person or entity to someone else. Anyone using this document should rely on his or her own independent judgment or, as appropriate, seek the advice of a competent professional in determining the exercise of reasonable care in any given circumstances. Information and other standards on the topic covered by this publication may be available from other sources, which the user may wish to consult for additional views or information not covered by this publication.

NEMA has no power, nor does it undertake to police or enforce compliance with the contents of this document. NEMA does not certify, test, or inspect products, designs, or installations for safety or health purposes. Any certification or other statement of compliance with any health or safety–related information in this document shall not be attributable to NEMA and is solely the responsibility of the certifier or maker of the statement.

Copyright National Electrical Manufacturers Association
Provided by IHS under license with NEMA
No reproduction or networking permitted without license from IHS
Not for Resale

TABLE OF CONTENTS

		Page
	FOREWORD	i
	PURPOSE	ii
	SCOPE	iii
Section 1	REFERENCED STANDARDS	
	Referenced Standards	1
	Definitions	2
Section 2	GENERAL	
	Suitability of Operation	6
	Arc Welding Power Source with Integral Wire Feed Unit	6
	Service Conditions	6
	Usual Service Conditions	6
	Unusual Service Conditions	6
	Installation and Operation	6
Section 3	CONSTRUCTION REQUIREMENTS—MECHANICAL CONSIDERATIONS	
	Frame and Enclosure	7
	Enclosure Construction	7
	Openings in Enclosures	8
	Corrosion Protection	8
	Service Line Hoses	8
	Water Cooling	9
	Brushes	9
	Jerk and Drop Tests	9
	Stacking of Arc Welding Power Sources	9
Section 4	CONSTRUCTION REQUIREMENTS—ELECTRICAL CONSIDERATIONS	
	Power Supply Connection-General	13
	Power Supply By Flexible Cord	13
	Power Supply By Permanent Wiring System	14
	Grounding	14
	Corrosion Protection	14
	Output Provisions	15
	Internal Wiring Requirements	16
	Spacings	16
	Classification of Insulation Systems	16
	Requirements For Specific Components	16
	Output Regulating Taps	17
	Auxiliary Power Supply	17
	Short Circuit of Welding Circuit	17
Section 5	RATINGS AND PERFORMANCE	
	Input Ratings of Arc Welding Power Sources Operating From Electrical Power Supplies	19
	Power Factor Correction	19
	Open Circuit Voltage	19

Copyright National Electrical Manufacturers Association
Provided by IHS under license with NEMA
No reproduction or networking permitted without license from IHS
Not for Resale

Output Ratings of Constant Current NEMA Class I
Arc Welding Power Sources 19
Output Ratings of Constant Current NEMA Class II
Arc Welding Power Sources 21
Output Ratings of Constant Current NEMA Class III
Arc Welding Power Sources 21
Output Ratings of Constant Voltage NEMA Class I
Arc Welding Power Sources 23
No Load Operation 23
Temperature Rise 23
Nameplate Marking 24

Section 6 TEMPERATURE TESTS

Testing Procedures for Arc Welding Power Sources 26
Thermometer Method of Temperature Determination 26
Resistance Method of Temperature Determination 26
Applied Thermocouple Method of Temperature Determination 26
Determination of Ambient Temperature 27
Cooling Air Temperature During Tests 27
Omission of Temperature Test on Duplicate Apparatus 27
Correction of Temperature to Time of Shutdown 27
Stopping Generator-Type Power Sources for Temperature Tests 27

Section 7 HIGH-POTENTIAL TESTS

High-Potential Tests 28
Test Voltage 28
Duration of Application of Test Voltage 28
Points of Application of Test Voltage 28
Temperature at Which High Potential Tests Are To Be Made 28
High Potential Test Procedure for Components and Accessories 28
Production Line High Potential Testing 28

Section 8 EFFICIENCY AND POWER FACTOR

Method of Determining Efficiency and Power Factor 30

Section 9 POWER SOURCES TO BE USED WITH GAS TUNGSTEN ARC WELDING (GTAW)

General 31
Definitions 31
Volt Ampere Relationship for GTAW 31
Categories of GTAW Power Sources 31
Nameplate Marking 32

Section 10 ARC WELDING POWER SOURCES WITH HIGH FREQUENCY ARC STARTING AND/OR STABILIZING

General 33
Definitions 33
HF Classification 33
Radio Frequency Radiation 33
General Principles for Installation of High Frequency Stabilized
Arc Welding Installations 34
Certifications of HFSAW Installations 35

Copyright National Electrical Manufacturers Association
Provided by IHS under license with NEMA
No reproduction or networking permitted without license from IHS
Not for Resale

Scope

This Standards Publication defines minimum mechanical and electrical construction and performance requirements applying to the following arc welding power sources:

1. Single phase transformer or transformer-rectifier;
2. Polyphase transformer or transformer-rectifier;
3. DC generator;
4. AC generator or ac generator with rectifier;
5. Associated electrical attachments; and
6. Power source with integral wire feed unit.

Copyright National Electrical Manufacturers Association
Provided by IHS under license with NEMA
No reproduction or networking permitted without license from IHS
Not for Resale

ELECTRIC ARC WELDING POWER SOURCES

Section 1
REFERENCED STANDARDS AND DEFINITIONS

1.1 REFERENCED STANDARDS

American National Standards Institute
1430 Broadway
New York, NY 10018

Z49.1-1988	*Safety in Welding and Cutting*
C57.12.90-1987	*American National Standard Distribution Power, and Regulating Transformers, Test Code for Liquid Immersed*
C63.2-1987	*Standard for Instrumentation—Electromagnetic Noise and Field Strength, 10 KHz to 40 GHz—Specific*
C63.4-1981	*Methods of Measurement of Radio Noise Emmissions from Low-Voltage Electrical and Electronic Equipment in the 10 kHz to 1GHz Range*

American Welding Society
550 N.W. Le Jeune Road, P.O. Box 351040
Miami, FL 33135

C5.6-1979	*Recommended Safe Practices for Gas-Metal Arc Welding*

Compressed Gas Association
Crystal Gateway 1, Suite 501
1235 Jefferson Davis Highway
Arlington, VA 22202

E-1-1980	*Standard Connections For Regulator Outlets, Torches and Fitted Hose For Welding and Cutting Equipment*
E-2-1983	*Hose Link Check Valve Standards For Welding and Cutting*

Institute of Electrical and Electronics Engineers
345 E. 47th St.
New York, NY 10017

112-1984	*Standard Test Procedure for Polyphase Induction Motors and Generators*
113-1985	*Guide on Test Procedures for DC Machines*
117-1974 (R1985)	*Standard Test Procedure For Evaluation of Systems of Insulating Materials for Random-wound AC Electric Machinery*
304-1977	*Test Procedure Evaluation and Classification of Insulation System for DC Machines*

National Electrical Manufacturers Association
2101 L Street, N.W.
Washington, D.C. 20037

WD 1-1983	*General Requirements for Wiring Devices*
EW 3-1983 (R1989)	*Semiautomatic Wire Feed Systems for Arc Welding*

Copyright National Electrical Manufacturers Association
Provided by IHS under license with NEMA
No reproduction or networking permitted without license from IHS
Not for Resale

National Fire Protection Association
Batterymarch Park
Quincy, MA 02269

ANSI/NFPA 70-1987 *National Electrical Code*

Rubber Manufacturers Association
1400 K Street N.W., Suite 900
Washington D.C. 20005

IP2-1987 *Hose Handbook*

IP7-1990 *Specifications for Rubber Welding Hose*

Underwriters Laboratories Inc.
333 Pfingsten Road
Northbrook, IL 60062

ANSI/UL94-1990 *Test For Flammability of Plastic Materials for Parts in Devices and Appliances*

ANSI/UL 551-1986 *Transformer-Type Arc Welding Machines*

1.2 DEFINITIONS

AC GENERATOR ARC WELDING POWER SOURCE

An ac generator arc welding power source is an ac generator with the associated control and indicating devices required to produce alternating current suitable for arc welding.

NEMA Standard 1-11-1983.

AC/DC GENERATOR-RECTIFIER ARC WELDING POWER SOURCE

An ac/dc generator-rectifier arc welding power source is a combination of an alternating current generator and static rectifiers with the associated control and indicating devices required to produce either alternating or direct current suitable for arc welding.

NEMA Standard 1-11-1983.

AC TRANSFORMER ARC WELDING POWER SOURCE

An ac transformer arc welding power source utilizes a transformer having isolated primary and secondary windings with the associated control and indicating devices required to produce an alternating current suitable for arc welding.

NEMA Standard 1-11-1983.

AC/DC TRANSFORMER-RECTIFIER ARC WELDING POWER SOURCE

An ac/dc transformer-rectifier arc welding power source is a combination of a transformer, having isolated primary and secondary windings, and static rectifiers with the associated control and indicating devices required to produce either alternating or direct current suitable for arc welding.

NEMA Standard 1-11-1983.

ARC WELDING POWER SOURCE WITH INTEGRAL WIRE FEED UNIT

An arc welding power source and wire feed unit constructed such that both are housed in a single enclosure.

NEMA Standard 11-15-1991.

ASSOCIATED ELECTRICAL ATTACHMENTS

Associated electrical attachments are those electrical controls, cables, accessories, and such, attached to the arc welding power source to facilitate control, function, or operation and that are external to the power source enclosure.

NEMA Standard 1-11-1983.

AUXILIARY POWER SUPPLY

An auxiliary power supply is a separate source of power available to the operator, which is provided by the arc welding power source for purposes other than supplying power to the welding arc.

NEMA Standard 1-11-1983.

CONSTANT CURRENT ARC WELDING POWER SOURCE

A constant current arc welding power source is a power source that has means for adjusting the load current and that has a static volt ampere curve that tends to produce a relatively constant load current. The load voltage, at a given load current, is responsive to the rate at which a consumable electrode is fed into the arc, except that, when a nonconsumable electrode is used, the load voltage is responsive to the electrode to work distance.

NEMA Standard 1-11-1983.

CONSTANT CURRENT/CONSTANT VOLTAGE ARC WELDING POWER SOURCE

A constant current/constant voltage arc welding power source is a power source that has the selectable charac-

Copyright National Electrical Manufacturers Association
Provided by IHS under license with NEMA
No reproduction or networking permitted without license from IHS
Not for Resale

teristics of a constant current arc welding power source or constant voltage arc welding power source.

NEMA Standard 1-11-1983.

CONSTANT VOLTAGE ARC WELDING POWER SOURCE

A constant voltage arc welding power source is a power source which has means for adjusting the load voltage and has a static volt ampere curve that produces a relatively constant load voltage. The load current, at a given load voltage, is responsive to the rate at which a consumable electrode is fed into the arc.

NEMA Standard 1-11-1983.

DC GENERATOR ARC WELDING POWER SOURCE

A dc generator arc welding power source is a dc generator with the associated control and indicating devices required to produce direct current suitable for arc welding.

NEMA Standard 1-11-1983.

DC GENERATOR-RECTIFIER ARC WELDING POWER SOURCE

A dc generator-rectifier arc welding power source is a combination of an ac generator and static rectifiers with the associated control and indicating devices required to produce direct current suitable for arc welding.

NEMA Standard 1-11-1983.

DC TRANSFORMER-RECTIFIER ARC WELDING POWER SOURCE

A dc transformer-rectifier arc welding power source is a combination of a transformer, having isolated primary and secondary windings, and static rectifiers with the associated control and indicating devices required to produce direct current suitable for arc welding.

NEMA Standard 1-11-1983.

DUTY CYCLE

Duty cycle, expressed in percent, is the ratio of arc time to total time.

For the purpose of these standards, the time period of one complete test cycle shall be 10 minutes. (For example, in the case of a 60 percent duty cycle, load shall be applied continuously for 6 minutes and shall be off for 4 minutes.)

NEMA Standard 1-24-1962.

EFFICIENCY

The efficiency of an arc welding power source is the ratio of the power output at the welding terminals to the total power input. Unless otherwise specified, the efficiency shall be given when the power source is operated at rated output.

NEMA Standard 1-11-1983.

ENCLOSURE

An arc welding power source enclosure is the surrounding case or housing constructed to provide a degree of protection to personnel against incidental contact with energized and moving parts and to provide a degree of protection to the power source against damage that will adversely affect its operation.

NEMA Standard 1-11-1983.

ELECTRODE LEAD

An electrode lead is the welding lead between one of the welding terminals of the arc welding power source and the welding electrode.

NEMA Standard 1-11-1983.

ENGINE GENERATOR ARC WELDING POWER SOURCE

An engine generator arc welding power source is a power source that consists of an engine mechanically connected to, and mounted with, one or more arc welding generators.

NEMA Standard 1-11-1983.

FRAME

The frame of an arc welding power source is a supporting structure provided to increase the strength and rigidity of the enclosure, and to provide means for mounting the various parts of the power source, or both.

NEMA Standard 1-11-1983.

HAND-HELD ASSEMBLY

An assembly or device that is designed to be supported and manipulated by hand during use.

NEMA Standard 1-11-1983.

HIGH FREQUENCY STABILIZED ARC WELDING POWER SOURCE

A high frequency stabilized arc welding power source is a constant current arc welding power source that includes a high-frequency arc stabilizer as an integral part of the power source and the suitable controls required to produce welding current. It is primarily intended for gas tungsten-arc welding.

NEMA Standard 1-11-1983.

INPUT CURRENT

Input current is the amperage drawn from the electrical power supply to operate an arc welding power source.

NEMA Standard 1-11-1983.

INPUT RATING

For an arc welding power source operating from an electrical power supply, the input rating consists of the rated input voltage(s), number of phases, rated frequency(s), and the input current when the power source is delivering rated output.

NEMA Standard 1-11-1983.

JACK

A female contact device designed to mate with a jack plug to establish an electrical connection.

NEMA Standard 1-11-1983.

Copyright National Electrical Manufacturers Association
Provided by IHS under license with NEMA
No reproduction or networking permitted without license from IHS
Not for Resale

JACK PLUG

A male device, usually associated with welding lead(s), that is inserted into a jack to establish an electrical connection of the welding circuit.

NEMA Standard 1-11-1983.

LIVE PART

A live part is a part at a potential different from ground, which could render an electrical shock.

NEMA Standard 11-17-1988.

LOAD CURRENT

The load current is the amperage flowing in the welding circuit when a load is applied to the welding terminals.

NEMA Standard 1-11-1983.

LOAD VOLTAGE

Load voltage is the voltage between the welding terminals of the arc welding power source when load current is flowing in the welding circuit.

NEMA Standard 1-11-1983.

MOTOR GENERATOR ARC WELDING POWER SOURCE

A motor generator arc welding power source is a power source that consists of an electric motor mechanically connected to and mounted with one or more arc welding generators.

NEMA Standard 1-11-1983.

MULTIPLE OPERATOR ARC WELDING POWER SOURCE

A multiple operator arc welding power source is a power source that supplies two or more welding arcs through suitable output control devices without objectionable arc interaction.

NEMA Standard 1-11-1983.

MULTIPLE OPERATOR WELDING OUTLET

A multiple operator welding outlet is a control station containing an adjustable output control device for adjusting load current supplied from a multiple operator arc welding power source.

NEMA Standard 1-11-1983.

NEMA CLASS I ARC WELDING POWER SOURCE

A NEMA Class I arc welding power source is characterized by its ability to deliver rated output at duty cycles of 60, 80, or 100 percent. If a power source is manufactured in accordance with the applicable standards for Class I power sources in this publication, it shall be marked "NEMA Class I (60)", "NEMA Class I (80)", or "NEMA Class I (100)".

A NEMA Class I arc welding power source is a completely assembled arc welding power source that is comprised of the characteristics listed below:

1. A constant current power source, a constant voltage power source, or a constant current/constant voltage power source, and;
2. A single operator power source, and;
3. One of the following:
   a. DC generator arc welding power source;
   b. AC generator arc welding power source;
   c. DC generator-rectifier arc welding power source;
   d. AC/DC generator-rectifier arc welding power source;
   e. AC transformer arc welding power source;
   f. DC transformer arc welding power source;
   g. AC/DC transformer-rectifier arc welding power source.

NEMA Standard 1-11-1983.

NEMA CLASS II ARC WELDING POWER SOURCE

A NEMA Class II arc welding power source is characterized by its ability to deliver rated output at duty cycles of 30, 40, or 50 percent. If a power source is manufactured in accordance with the applicable standards for Class II power sources in this publication, it shall be marked "NEMA Class II (30)", "NEMA Class II (40)", or "NEMA Class II (50)".

A NEMA Class II arc welding power source is a completely assembled arc welding power source which is comprised of the characteristics listed below:

1. A constant current power source, a constant voltage power source, or a constant current/constant voltage power source, and;
2. A single operator power source, and;
3. One of the following:
   a. DC generator arc welding power source;
   b. AC generator arc welding power source;
   c. DC generator-rectifier arc welding power source;
   d. AC/DC generator-rectifier arc welding power source;
   e. AC transformer arc welding power source;
   f. DC transformer arc welding power source;
   g. AC/DC transformer-rectifier arc welding power source.

NEMA Standard 1-11-1983.

NEMA CLASS III ARC WELDING POWER SOURCE

A NEMA Class III arc welding power source is characterized by its ability to deliver rated output at a duty cycle of 20 percent. If a power source is manufactured in accordance with the applicable standards for Class III power sources in this publication, it shall be marked "NEMA Class III (20)".

A NEMA Class III arc welding power source is a completely assembled arc welding power source that is comprised of the characteristics listed below:

1. A constant current power source; and
2. A single operator power source; and

Copyright National Electrical Manufacturers Association
Provided by IHS under license with NEMA
No reproduction or networking permitted without license from IHS
Not for Resale

3. One of the following:
   a. AC transformer arc welding power source;
   b. DC transformer-rectifier arc welding power source;
   c. AC/DC transformer-rectifier arc welding power source.

NEMA Standard 1-11-1983.

OPEN CIRCUIT VOLTAGE

Open circuit voltage is the voltage, excluding high frequency stabilization voltage, between the welding terminals of the arc welding power source when no load current is flowing in the welding circuit.

NEMA Standard 1-11-1983.

PERCENT RIPPLE VOLTAGE

Percent ripple voltage is the ratio, expressed as a percentage, of the effective (root mean square) value of the ripple voltage to the average value of a pulsating unidirectional voltage. The root-mean-square value of the ripple voltage may be measured with a root-mean-square indicating meter in series with a capacitor having sufficiently low impedance so as not to affect appreciably the indication of the voltmeter. Rectifier type instruments should not be used.

Authorized Engineering Information 5-14-1970.

RATED FREQUENCY

Rated frequency (expressed in hertz) is the supply voltage frequency at which an arc welding power source is designed to operate.

NEMA Standard 1-11-1983.

RATED INPUT VOLTAGE

The rated input voltage is the supply voltage(s) at which an arc welding power source is designed to operate.

NEMA Standard 1-11-1983.

RATED LOAD CURRENT

The rated load current is the load current at rated output.

NEMA Standard 1-11-1983.

RATED LOAD SPEED

The rated load speed of an arc welding power source is the rotational speed at which an arc welding generator is designed to operate when delivering rated output.

NEMA Standard 1-11-1983.

RATED LOAD VOLTAGE

Rated load voltage is the load voltage at rated output.

NEMA Standard 1-11-1983.

RATED OUTPUT

The rated output of an arc welding power source shall consist of a designated limit of output or capacity expressed as rated load voltage, rated load current, and rated duty cycle when the power source is operated at rated input voltage(s) and rated frequency(s), or at rated load speed.

NEMA Standard 1-11-1983.

SERVICE LINE HOSES

Service line hoses are the hoses external to the enclosure to or from an arc welding power source, including connectors, supplying shielding medium, cooling medium, and providing means for fume removal, and/or nonelectrical power or control.

NEMA Standard 11-15-1991.

SINGLE OPERATOR ARC WELDING POWER SOURCE

A single operator arc welding power source is a power source which is designed to deliver load current to only one welding arc.

NEMA Standard 1-11-1983.

SLOPE OF THE STATIC VOLT AMPERE CURVE

The slope of the static volt ampere curve is the ratio of load voltage change to the change in load current expressed in volts per 100 amperes.

NEMA Standard 7-14-1971.

STATIC VOLT AMPERE CHARACTERISTICS

The static volt ampere characteristics is the curve or family of curves which gives the steady state load voltage of an arc welding power source as ordinate, plotted against the steady state load current as abscissa.

NEMA Standard 1-11-1983.

WELDING CIRCUIT

The welding circuit consists of all attachments connected to the welding terminals of the arc welding power source.

NEMA Standard 1-11-1983.

WELDING LEADS

Welding leads conduct the welding power and, when provided, high frequency energy from the welding terminals to the welding arc.

NEMA Standard 1-11-1983.

WELDING TERMINALS

Welding terminals are those terminals of an arc welding power source which furnish welding power and, when provided, high frequency energy for the welding arc.

NEMA Standard 1-11-1983.

WORK LEAD

A work lead is the welding lead between one of the welding terminals of the arc welding power source and the work.

NEMA Standard 1-11-1983.

Copyright National Electrical Manufacturers Association
Provided by IHS under license with NEMA
No reproduction or networking permitted without license from IHS
Not for Resale

Section 2
GENERAL

2.1 SUITABILITY OF OPERATION

The characteristics of an arc welding power source conforming to these standards shall be such that a qualified operator, or appropriate mechanically controlled equipment, can, by following the manufacturer's recommended installation and operating procedures, weld satisfactorily within the specified operating range of the power source and with the welding processes for which it is intended to be used.

NEMA Standard 1-11-1983.

2.2 ARC WELDING POWER SOURCE WITH INTEGRAL WIRE FEED UNIT

A wire feed unit included with the power source shall comply with NEMA EW 3. The provisions of EW 3 shall be in addition to and not in place of the provision of EW 1.

NEMA Standard 11-15-1991.

2.3 SERVICE CONDITIONS

Service conditions, other than those specified as usual, may have some detrimental effect on the arc welding power source. Such effect depends upon the degree of departure from usual operating conditions and the severity of the environment to which the power source is exposed. Of principal concern are unusual service conditions which may cause abnormal deterioration of the insulation system, electrical breakdown, or mechanical wear, resulting in premature failure. The manufacturer of the power source should be consulted for further information regarding any unusual service conditions.

Authorized Engineering Information 1-11-1983.

2.4 USUAL SERVICE CONDITIONS

An arc welding power source constructed in accordance with these standards shall be capable of operation, when the following conditions prevail:

1. Where the ambient temperature is in the range of 0°C to 40°C;
2. Where the altitude is between sea level and 3300 feet (1000 meters);
3. When exposed to gases and dust only to the extent of those normally produced by the welding arc;
4. When the input line voltage varies within the range of ±10 percent of input line voltage rating of the arc welding power source; and
5. Where the base of a power source is within 15 degrees of horizontal.

NEMA Standard 1-11-1983.

2.5 UNUSUAL SERVICE CONDITIONS

Examples of unusual service conditions are exposure to:

1. Combustible or conducting dusts;
2. Chemical fumes or flammable gases;
3. Rain, steam, or oil vapor;
4. Vermin infestation or atmosphere conducive to the growth of fungus;
5. Very dirty, corrosive, explosive, or abrasive environment;
6. High radiant or conducted heat;
7. Abnormal shock or vibration;
8. Nuclear radiation;
9. Severe weather conditions;
10. Seacoast and shipboard conditions;
11. Continuous average relative humidity above 90 percent or below 10 percent; or
12. Altitudes in excess of 3300 feet (1000 meters).

Authorized Engineering Information 1-11-1983.

2.6 INSTALLATION AND OPERATION

Arc welding power sources shall be installed and operated in accordance with the *National Electrical Code,* state and local codes as applicable, the manufacturers instructions, and applicable safety specifications.

NEMA Standard 11-17-1988.

Copyright National Electrical Manufacturers Association
Provided by IHS under license with NEMA
No reproduction or networking permitted without license from IHS
Not for Resale

tion No. IP-7, *Specification for Rubber Welding Hose,* or IP-2, *Hose Handbook,* and Compressed Gas Association Inc. Publication No. E1, *Standard Connections for Regulators, Outlets, Torches, and Fitted Hose for Welding and Cutting Equipment,* or E-2, *Hose Line Check Value Standards for Welding and Cutting.*

NEMA Standard 11-17-1988.

3.6 WATER COOLING

Any device or system using water for cooling, other than an integrated recirculating system, shall be capable of operating at an inlet water pressure ranging from 30 psi (207 kPa) to 75 psi (517 kPa) and a water inlet temperature up to 49°C. For rating purposes, the water inlet pressure shall be 30 psi (207 kPa) at a water inlet temperature of 49°C.

3.7 BRUSHES

Brushes used as part of the arc welding power source shall be in accordance with ANSI/NEMA Standards Publication No. CB 1, *Brushes for Electrical Machines.*

NEMA Standard 11-15-1991.

3.8 JERK AND DROP TESTS

3.8.1 Jerk Test

If an eye or lug is provided for the purpose of lifting an assembled arc welding power source, such device shall be capable of withstanding a free fall jerk test. This test shall be made with the power source equipped with all associated attachments (excluding trailers, carts, and wheel running gears) that are likely to be installed and, in the case of engine driven power sources, completely serviced and ready for operation.

The unit shall be suspended from a rigid member by a chain or cable attached to the lifting eye or lug, and it shall be positioned for a direct free fall. The chain or cable suspension assembly shall be arranged to provide for a free fall of at least 6 inches (152 mm) before the unit is caught in suspension bringing the full force of the fall to bear on the lifting eye or lug. Three such falls shall be made.

3.8.2 Drop Test

An assembled arc welding power source equipped with all associated attachments (excluding trailers, carts, and wheel running gear) that are likely to be installed and, in the case of engine driven power sources completely serviced and ready for operation, shall be capable of withstanding a drop test. This test shall consist of three drops onto a hard and rigid surface from a height of not less than 6 inches (152 mm). These drops shall be so arranged that each drop shall strike on a bottom edge different from that of any other drop.

3.8.3 Test Conformance

After the above tests, the power source shall still conform to the provisions of this standard, other than the foregoing 3.8.1 and 3.8.2, in all respects even though there may be some deformation of the structural parts of enclosure.

NEMA Standard 1-11-1983.

3.9 STACKING OF ARC WELDING POWER SOURCES

If the manufacturer represents a power source for stacking, its enclosure, with all panels securely in place, shall be manufactured so that it will have the strength and rigidity to support the manufacturer's specified number and types of additional arc welding power sources. The locating means for stacking the arc welding power sources shall be such that the lower units cannot be lifted by the lifting yoke or eye of the top arc welding power source, unless the manufacturer represents that all of the power sources can be lifted as a unit.

NEMA Standard 1-11-1983.

Copyright National Electrical Manufacturers Association
Provided by IHS under license with NEMA
No reproduction or networking permitted without license from IHS
Not for Resale

Table 3-1
MINIMUM THICKNESS OF SHEET METAL FOR ENCLOSURES— CARBON STEEL OR STAINLESS STEEL

Without Supporting Frame(a)				With Supporting Frame or Equivalent Reinforcing (b)				Minimum Thickness			
Maximum Width(c), Inches (mm)		Maximum Length(d) of Supported Edge, Inches (mm)		Maximum Width(c), Inches (mm)		Maximum Length, Inches (mm)		Uncoated, Inches (mm)		Zinc Coated Inches (mm)	
4.0	(102)	Not limited		6.25	(159)	Not limited					
4.75	(121)	5.75	(146)	6.75	(171)	8.25	(210)	0.020	(0.51)	0.023	(0.58)
6.0	(152)	Not limited		9.5	(241)	Not limited					
7.0	(179)	8.75	(222)	10.0	(254)	12.5	(318)	0.026	(0.66)	0.029	(0.74)
8.0	(203)	Not limited		2.0	(305)	Not limited					
9.0	(229)	11.5	(292)	13.0	(330)	16.0	(406)	0.032	(0.81)	0.034	(0.86)
12.5	(318)	Not limited		19.5	(495)	Not limited					
14.0	(356)	18.0	(457)	21.0	(533)	25.0	(635)	0.042	(1.07)	0.045	(1.14)
18.0	(457)	Not limited		27.0	(686)	Not limited					
20.0	(508)	25.0	(635)	29.0	(737)	36.0	(914)	0.053	(1.35)	0.056	(1.42)
22.0	(559)	Not limited		33.0	(838)	Not limited					
25.0	(635)	31.0	(787)	35.0	(889)	43.0	(1092)	0.060	(1.52)	0.063	(1.60)
25.0	(635)	Not limited		39.0	(991)	Not limited					
29.0	(737)	36.0	(914)	41.0	(1041)	51.0	(1295)	0.067	(1.70)	0.070	(1.78)
33.0	(838)	Not limited		51.0	(1295)	Not limited					
38.0	(965)	47.0	(1194)	54.0	(1372)	66.0	(1676)	0.080	(2.03)	0.084	(2.13)
42.0	(1067)	Not limited		64.0	(1626)	Not limited					
47.0	(1194)	59.0	(1499)	68.0	(1727)	84.0	(2134)	0.093	(2.36)	0.097	(2.46)
52.0	(1321)	Not limited		80.0	(2032)	Not limited					
60.0	(1524)	74.0	(1880)	84.0	(2134)	103.0	(2616)	0.108	(2.74)	0.111	(2.82)
63.0	(1606)	Not limited		97.0	(2464)	Not limited					
73.0	(1854)	90.0	(2286)	103.0	(2616)	127.0	(3226)	0.123	(3.12)	0.126	(3.20)

(a) See 3.2.6

(b) See 3.2.5

(c) The width is the smaller dimension of a rectangular piece of sheet metal that is part of an enclosure. Adjacent surfaces of an enclosure may have supports in common and be made of a single sheet.

(d) Not limited applies only if the edge of the surface is flanged at least 0.500 inch (12.7 mm) or fastened to adjacent surfaces not normally removed in use.

Table 3-1 data are reprinted by permission of Underwriters Laboratories from ANSI/UL 551, *Transformer-Type Arc Welding Machines*.

Copyright National Electrical Manufacturers Association
Provided by IHS under license with NEMA
No reproduction or networking permitted without license from IHS
Not for Resale

Table 4-5
SPACINGS IN ARC WELDING POWER SOURCES[a]

r.m.s. Voltage Between Parts Involved (d, e)	At Wiring Terminals (b)				At Other Than Wiring Terminals							
					To other than Enclosure Walls				To walls of a metal enclosure (f, g)			
	Through Air		Over Surface		Through Air (c)		Over Surface		Through Air		Over Surface	
	In.	(mm)	In.	(mm)	In.	(mm)	In.	(mm)	In.	(mm)	In.	(mm)
0 – 50	½	(12.7)	½	(12.7)	⅛	(3.18)	⅛	(3.18)	½	(12.7)	½	(12.7)
51 – 150	½	(12.7)	½	(12.7)	⅛	(3.18)	¼	(6.35)	½	(12.7)	½	(12.7)
151 – 300	½	(12.7)	½	(12.7)	¼	(6.35)	⅜	(9.53)	½	(12.7)	½	(12.7)
301 – 600	1	(25.4)	1	(25.4)	⅜	(9.53)	½	(12.7)	½	(12.7)	½	(12.7)

[a] Values do not apply to a turn of wire on a coil or to spacings between (1) two conductors of a coil, (2) a coil and its core, and (3) a coil and any other part of opposite polarity including the crossover lead. The spacings given in Table 4-5 do not apply to wiring devices (snap switches, lampholders, etc.), motors, printed circuit boards and devices, or other accessories for which there are standards established for such components.

[b] Wiring terminals are considered to be terminals to which supply connections are made in the field.

[c] The spacing between screw type terminals of opposite polarity shall be not less than 0.250 inch (6.35 mm) if the terminals are in the same plane.

[d] When the repetitive peak voltage on which the device is used is more than 1.5 times the rms volts, the peak voltage shall be divided by 2 to obtain an equivalent rms rating in volts.

[e] For grounded power systems, such as three phase four wire systems, the clearance and creepage distances to ground shall be governed by voltage to ground.

[f] A metal piece attached to the enclosure is considered to be a part of the enclosure if deformation of the enclosure is likely to reduce clearance and creepage distances between the metal piece and uninsulated live parts or film coated wire.

[g] For subassembly enclosures where clearance and creepage distances are rigidly maintained and when mounted inside another enclosure, the distances for "to other than enclosure walls" shall be permitted instead of "to walls of metal enclosure" but in no case shall they be less than 0.100 inch (2.54 mm).

4.6 OUTPUT PROVISIONS

4.6.1 Welding Leads

Welding leads supplied with the power source shall be of a size sufficient to limit the temperature to 85°C or to the temperature rating of the cable insulation, whichever is less, when operated at the rated load current and duty cycle of the power source.

When welding leads are supplied as integral parts of the power source, the attachment of such leads shall be so constructed to withstand an external pull, exerted for 1 minute from any direction, as specified in Table 4-3, without reducing electrical spacings below those specified in Table 4-5, or causing damage to any internal parts of the power source. However, the pull applied to the welding leads need not be more than that specified for the flexible cord used for the power supply connection.

At locations where a welding lead passes through an opening in a barrier, or enclosure, the opening shall be smoothly rounded or shall be provided with a secured and smoothly rounded bushing.

For a power source with integral wire feed unit, the provisions of EW 3 shall apply for the gun cable assembly.

4.6.2 Welding Terminals

Terminals of the power source provided for the connection of welding leads shall be constructed to withstand an external pull, exerted for 1 minute from any direction, as specified in Table 4-3, without reducing the electrical spacings below those specified in Table 4-5 or without permanently deforming the terminals or adjacent parts. However, the pull applied to the welding terminals need not be more than that specified for the flexible cord used for the power supply connection. In the case of a jack plug, the plug can pull free of its jack with the application of a lesser pull.

Threaded connections used for the connection of welding leads shall withstand a torque as given by the following equation without reducing internal spacings below those given in Table 4-5 or without permanently deforming the terminals or adjacent parts:

$$T = 100 \times D^2 \text{ (customary units)}$$

$$T = 0.0175 \times D^2 \text{ (SI units)}$$

Where:
T = Torque in lb.-ft. (n.m).
D = Thread major diameter in inches (mm).

Copyright National Electrical Manufacturers Association
Provided by IHS under license with NEMA
No reproduction or networking permitted without license from IHS
Not for Resale

The welding terminals shall not exceed 60°C temperature rise when the power source is operated at rated-load current and duty cycle. When temperature testing, the welding leads connected to the welding terminals shall be in accordance with 4.6.1. Threaded connections used to hold the welding leads shall be tightened to a minimum torque as given in the following equation:

$$T = 60 \times D^2 \text{ (customary units)}$$

$$T = 0.0175 \times D^2 \text{ (SI units)}$$

NEMA Standard 1-11-1983.

4.7 INTERNAL WIRING REQUIREMENTS

4.7.1 Insulated Conductors

When internal wiring consists of insulated conductors, they shall be selected for the particular application with respect to the temperature, current, voltage, exposure to oil or grease, and other conditions of service to which they are likely to be subjected.

The wiring shall be so arranged or protected that no damage to the conductor insulation will occur from contact with any rough, sharp, or moving part.

All joints and connections shall be mechanically secured and shall provide electrical contact without mechanical strain on the conductor.

NEMA Standard 1-11-1983.

4.7.2 Uninsulated Conductors

When uninsulated conductors are used within an enclosure, they shall be so supported that the spacings given in Table 4-5 shall be maintained.

NEMA Standard 1-11-1983.

4.7.3 Insulating of Live Parts

Insulating washers, bushings, sheets, and such for the mounting of or insulation of live parts shall not be functionally damaged by the temperature to which they will be subjected during operation at rated load under usual service conditions.

NEMA Standard 1-11-1983.

4.8 SPACINGS

The minimum spacing between any uninsulated live part and another live, grounded, or isolated conductive part shall not be less than those shown in Table 4-5.

NEMA Standard 1-11-1983.

4.9 CLASSIFICATION OF INSULATION SYSTEMS

An insulation system is an assembly of insulating materials in association with the conductors and the supporting structural parts of an arc welding power source. Insulation systems are divided into classes according to the thermal endurance of the system for temperature rating purposes.

Insulation systems shall be classified as Class 105, Class 130, Class 155, Class 180, Class 200, or Class 220. Each insulation system is one that by experience or accepted test can be shown to have suitable thermal endurance when operating at the limiting temperature specified in temperature rise Tables 5-7 and 5-8.

The term "experience," as used in this paragraph, means successful operation for a long time under actual operating conditions of power sources designed with a temperature rise at or near the temperature rating limit.

The term "accepted test," as used in this paragraph, means a test on a system or model system that simulates the electrical, thermal, and mechanical stresses occurring in service.

Where appropriate to the construction, tests shall be made in accordance with the following applicable IEEE Test Procedures:

1. *Standard Test Procedure For Evaluation of Systems of Insulating Materials for Random-wound AC Electric Machinery,* IEEE Publication No. 117.
2. *Test Procedure Evaluation and Classification of Insulation System for DC Machines,* IEEE Publication No. 304.

For other constructions for which tests have not been standardized, similar procedures shall be permitted to be used if it is shown that they properly discriminate between service proven systems known to be different.

When evaluated by an accepted test, a new or modified insulation system shall be compared to an insulation system on which there has been substantial service experience.

If a comparison is made on a system of the same class, the new system shall have equal or longer thermal endurance under the same test conditions; if the comparison is made with a system of a lower temperature class, it shall have equal or longer thermal endurance at an appropriately higher temperature. When comparing systems of different classes, an appropriately higher temperature shall be considered to be 25°C per class higher than the temperature for the base insulation system class.

NEMA Standard 1-11-1983.

4.10 REQUIREMENTS FOR SPECIFIC COMPONENTS

4.10.1 Transformers

A power source transformer supplying welding current shall have the secondary winding(s) electrically isolated from the primary winding(s) when the power source is designed to be operated from power supply lines.

NEMA Standard 1-11-1983.

Copyright National Electrical Manufacturers Association
Provided by IHS under license with NEMA
No reproduction or networking permitted without license from IHS
Not for Resale

Reproduced By GLOBAL
ENGINEERING DOCUMENTS
With The Permission Of NEMA
Under Royalty Agreement

NEMA STANDARDS PUBLICATION NO. EW 1

nema

Electric Arc Welding Power Sources

NEMA

NATIONAL ELECTRICAL MANUFACTURERS ASSOCIATION ■ 2101 L STREET, N.W., WASHINGTON, D.C. 20037

Copyright National Electrical Manufacturers Association
Provided by IHS under license with NEMA
No reproduction or networking permitted without license from IHS
Not for Resale

NEMA Standards Publication No. EW 1-1988 (R1994, R1999)

Electric Arc Welding Power Sources

Published by:

National Electrical Manufacturers Association
1300 North 17th Street, Suite 1847
Rosslyn, Virginia 22209

© Copyright 1999 by the National Electrical Manufacturers Association. All rights including translation into other languages, reserved under the Universal Copyright Convention, the Berne Convention for the Protection of Literary and Artistic Works, and the International and Pan American Copyright Conventions.

Copyright National Electrical Manufacturers Association
Provided by IHS under license with NEMA
No reproduction or networking permitted without license from IHS
Not for Resale

ADOPTION NOTICE

ADOPTION NOTICE 1
26 October 1989
NEMA EW 1-1988
1988
SUPERSEDING
NEMA EW 1-1983 (R1988)
1983

NEMA EW 1 was adopted 26 October 1989 and is approved for use by the Department of Defense (DoD). Copies of this document are stocked by the DoD Single Stock Point, Naval Publications and Forms Center, 5801 Tabor Ave., Philadelphia, PA 19120-5099, for issue to DoD activities only. All others must obtain documents from:

National Electrical Manufacturers Association (NEMA)
2101 L Street, N.W.
Washington, DC 20037-1580

Title of Document: Electric Arc-Welding Power Sources

Date of Specific Issue Adopted: 1988

Releasing Non-Government Standard Body: National Electrical Manufacturers Association

Custodians:
Army - AL
Navy - SH
Air Force - 99

Review Activities:
Air Force - 84
DLA - GS

Military Coordinating Activity:
DLA - IP

(Project 3431-0203)

DISTRIBUTION STATEMENT A. Approved for public release; distribution is unlimited. FSC 3431

Copyright National Electrical Manufacturers Association
Provided by IHS under license with NEMA
No reproduction or networking permitted without license from IHS
Not for Resale

TABLE OF CONTENTS

		Page
	FOREWORD	i
	PURPOSE	ii
	SCOPE	iii
Section 1	REFERENCED STANDARDS	
	Referenced Standards	1
	Definitions	2
Section 2	GENERAL	
	Suitability of Operation	6
	Service Conditions	6
	Usual Service Conditions	6
	Unusual Service Conditions	6
	Installation and Operation	6
Section 3	CONSTRUCTION REQUIREMENTS – MECHANICAL CONSIDERATIONS	
	Frame and Enclosure	7
	Enclosure Construction	7
	Openings in Enclosures	8
	Corrosion Protection	8
	Service Line Hoses	8
	Water Cooling	9
	Brushes	9
	Jerk and Drop Tests	9
	Stacking of Arc Welding Power Sources	9
Section 4	CONSTRUCTION REQUIREMENTS – ELECTRICAL CONSIDERATIONS	
	Power Supply Connection-General	13
	Power Supply By Flexible Cord	13
	Power Supply By Permanent Wiring System	14
	Grounding	14
	Corrosion Protection	14
	Output Provisions	15
	Internal Wiring Requirements	16
	Spacings	16
	Classification of Insulation Systems	16
	Requirements For Specific Components	16
	Output Regulating Taps	17
	Auxiliary Power Supply	17
	Short Circuit of Welding Circuit	17
Section 5	RATINGS AND PERFORMANCE	
	Input Ratings of Arc Welding Power Sources Operating From Electrical Power Supplies	19
	Power Factor Correction	19
	Open Circuit Voltage	19
	Output Ratings of Constant Current NEMA Class I Arc Welding Power Sources	19
	Output Ratings of Constant Current NEMA Class II Arc Welding Power Sources	21
	Output Ratings of Constant Current NEMA Class III Arc Welding Power Sources	21

Copyright National Electrical Manufacturers Association
Provided by IHS under license with NEMA
No reproduction or networking permitted without license from IHS
Not for Resale

Output Ratings of Constant Voltage NEMA Class I Arc Welding Power Sources . . . 23
No Load Operation . . . 23
Temperature Rise . . . 23
Nameplate Marking . . . 24

Section 6 TEMPERATURE TESTS
Testing Procedures for Arc Welding Power Sources . . . 26
Thermometer Method of Temperature Determination . . . 26
Resistance Method of Temperature Determination . . . 26
Applied Thermocouple Method of Temperature Determination . . . 26
Determination of Ambient Temperature . . . 27
Cooling Air Temperature During Tests . . . 27
Omission of Temperature Test on Duplicate Apparatus . . . 27
Correction of Temperature to Time of Shutdown . . . 27
Stopping Generator-Type Power Sources for Temperature Tests . . . 27

Section 7 HIGH-POTENTIAL TESTS
High-Potential Tests . . . 28
Test Voltage . . . 28
Duration of Application of Test Voltage . . . 28
Points of Application of Test Voltage . . . 28
Temperature at Which High Potential Tests Are To Be Made . . . 28
High Potential Test Procedure for Components and Accessories . . . 28
Production Line High Potential Testing . . . 28

Section 8 EFFICIENCY AND POWER FACTOR
Method of Determining Efficiency and Power Factor . . . 30

Section 9 POWER SOURCES TO BE USED WITH GAS TUNGSTEN ARC WELDING (GTAW)
General . . . 31
Definitions . . . 31
Volt Ampere Relationship for GTAW . . . 31
Categories of GTAW Power Sources . . . 31
Nameplate Marking . . . 32

Section 10 ARC WELDING POWER SOURCES WITH HIGH FREQUENCY ARC STARTING AND/OR STABILIZING
General . . . 33
Definitions . . . 33
HF Classification . . . 33
Radio Frequency Radiation . . . 33
General Principles for Installation of High Frequency Stabilized Arc Welding Installations . . . 34
Certifications of HFSAW Installations . . . 35

Copyright National Electrical Manufacturers Association
Provided by IHS under license with NEMA
No reproduction or networking permitted without license from IHS
Not for Resale

LIST OF TABLES

Table 3-1	Minimum Thickness of Sheet Metal for Enclosures – Carbon Steel or Stainless Steel	10
Table 3-2	Minimum Thickness of Sheet Metal for Enclosures – Aluminum, Copper, or Brass	11
Table 3-3	Minimum Thickness of Cast Metal for Enclosures	12
Table 4-1	Conductor Size of Cords	13
Table 4-2	Size of Insulated Copper Conductors	13
Table 4-3	External Pulling Forces	14
Table 4-4	Diameter or Knockout of Hole for Conduit and Width of Surrounding Flat Surface	14
Table 4-5	Spacings in Arc Welding Power Sources	15
Table 5-1	Constant Current, AC or DC NEMA Class I Arc Welding Power Sources	20
Table 5-2	Constant Current, AC/DC NEMA Class I Arc Welding Power Sources	20
Table 5-3	Constant Current, AC or DC NEMA Class II Arc Welding Power Sources	21
Table 5-4	Constant Current, AC/DC NEMA Class II Arc Welding Power Sources	22
Table 5-5	Constant Current, NEMA CLASS III Arc Welding Power Sources	22
Table 5-6	Constant Voltage, AC or DC NEMA Class I Arc Welding Power Sources	23
Table 5-7	Maximum Temperature Rise for DC Generator, AC Generator-rectifier and AC Generator Arc Welding Power Sources	24
Table 5-8	Maximum Temperature Rise for AC Transformer, DC Transformer – Rectifier and AC or DC Transformer-Rectifier Arc Welding Power Sources	25

LIST OF FIGURES

Figure 3-1	Probe	8
Figure 3-2	Enclosure Opening	8
Figure 10-1	Test Setup	37

Copyright National Electrical Manufacturers Association
Provided by IHS under license with NEMA
No reproduction or networking permitted without license from IHS
Not for Resale

Foreword

The standards in this publication represent the technical judgement of the Arc Welding Section with respect to the performance and construction of electric arc welding power sources. These standards are based upon sound engineering principles, research, records of tests, and field experience. The standards cover both installation and manufacturing criteria obtained from manufacturers and users.

To obtain input, copies of the proposed standard were sent to a number of individuals and organizations in the public and private sectors having an interest in or responsibility for the purchase, testing, application, use, or inspection of this product category. Comments and suggestions received during the draft stage resulted in a number of substantive changes being made in this publication.

As future major revisions to this publication are proposed, appropriate individuals and organizations will be canvassed.

Publication No. EW 1-1988 revises and reaffirms the content of NEMA Standards Publication for Electric Arc Welding Power Sources Publication No. EW 1-1983. The unchanged NEMA Standards and Authorized Engineering Information appear in this publication with the original EW 1-1983 date. Those that have been revised are followed by their appropriate classification and the date.

The values stated in U.S. customary (inch) units are to be regarded as the standard. Calculated SI (millimeter) equivalents of the U.S. customary (inch) units have been included. The SI units of measurement are those adopted by the General Conference on Weights and Measures (CGPM) as the International System of Units (Systeme Internationale D'Unites) and are sometimes referred to as the "modern metric system."

Proposed or recommended revisions to this Standards Publication should be submitted to:

Manager, Engineering Department
National Electrical Manufacturers Association
2101 L Street, N.W.
Washington, DC 20037

Copyright National Electrical Manufacturers Association
Provided by IHS under license with NEMA
No reproduction or networking permitted without license from IHS
Not for Resale

Purpose

This NEMA Standards Publication is adopted in the public interest and is designed to eliminate misunderstandings between the manufacturer and purchasers and to assist purchasers in selecting and obtaining the proper product for their particular need.

Recommended safe practices intended to prevent personal injury and property damage arising out of the installation and use of this equipment are covered more completely in other related safety publications such as the Manufacturer's Instructions; ANSI/NFPA 70, the *National Electrical Code*; ANSI/AWS Z49.1, *Safety in Welding and Cutting*; AWS Publication C5.6-79, *Recommended Safe Practices for Gas-Metal Arc Welding.* (See 1.1, Referenced Standards.)

Copyright National Electrical Manufacturers Association
Provided by IHS under license with NEMA
No reproduction or networking permitted without license from IHS
Not for Resale

Scope

This Standards Publication defines minimum mechanical and electrical construction and performance requirements applying to the following arc welding power sources:

1. Single phase transformer or transformer-rectifier;
2. Polyphase transformer or transformer-rectifier;
3. DC generator;
4. AC generator or ac generator with rectifier; and
5. Associated electrical attachments.

--`,,`-`-`,,`,,`,`,,`---

Copyright National Electrical Manufacturers Association
Provided by IHS under license with NEMA
No reproduction or networking permitted without license from IHS
Not for Resale

ELECTRIC ARC WELDING POWER SOURCES

Section 1
REFERENCED STANDARDS AND DEFINITIONS

1.1 REFERENCED STANDARDS

American National Standards Institute
1430 Broadway
New York, NY 10018

Z49.1-1988	*Safety in Welding and Cutting*
C57.12.90-1987	*American National Standard Distribution Power, and Regulating Transformers, Test Code for Liquid Immersed*
C63.2-1987	*Standard for Instrumentation – Electromagnetic Noise and Field Strength, 10 KHz to 40 GHz – Specific*
C63.4-1981	*Methods of Measurement of Radio Noise Emmissions from Low-Voltage Electrical and Electronic Equipment in the 10 kHz to 1GHz Range*

American Welding Society
550 N.W. Le Jeune Road, P.O. Box 351040
Miami, FL 33135

C5.6-1979	*Recommended Safe Practices for Gas-Metal Arc Welding*

Compressed Gas Association
Crystal Gateway 1, Suite 501
1235 Jefferson Davis Highway
Arlington, VA 22202

E-1-1980	*Standard Connections For Regulator Outlets, Torches and Fitted Hose For Welding and Cutting Equipment*
E-2-1983	*Hose Link Check Valve Standards For Welding and Cutting*

Institute of Electrical and Electronics Engineers
345 E. 47th St.
New York, NY 10017

112-1984	*Standard Test Procedure for Polyphase Induction Motors and Generators*
113-1985	*Guide on Test Procedures for DC Machines*
117-1974 (R1985)	*Standard Test Procedure For Evaluation of Systems of Insulating Materials for Random-wound AC Electric Machinery*
304-1977	*Test Procedure Evaluation and Classification of Insulation System for DC Machines*

National Electrical Manufacturers Association
2101 L Street, N.W.
Washington, D.C. 20037

ANSI/NEMA CB1-1984	*Brushes For Electrical Machines*
WD1-1983	*General Requirements for Wiring Devices*

Copyright National Electrical Manufacturers Association
Provided by IHS under license with NEMA
No reproduction or networking permitted without license from IHS
Not for Resale

National Fire Protection Association
Batterymarch Park
Quincy, MA 02269

ANSI/NFPA 70-1987 — *National Electrical Code*

Rubber Manufacturers Association
1400 K Street N.W.
Washington D.C. 20005

IP2-1979 — *Hose Handbook*

IP7-1982 — *Specifications for Rubber Welding Hose*

Underwriters Laboratories Inc.
333 Pfingsten Road
Northbrook, IL 60062

ANSI/UL94-1985 — *Test For Flammability of Plastic Materials for Parts in Devices and Appliances*

ANSI/UL 551-1986 — *Transformer-Type Arc Welding Machines*

1.2 DEFINITIONS

AC GENERATOR ARC WELDING POWER SOURCE

An ac generator arc welding power source is an ac generator with the associated control and indicating devices required to produce alternating current suitable for arc welding.

NEMA Standard 1-11-1983.

AC/DC GENERATOR-RECTIFIER ARC WELDING POWER SOURCE

An ac/dc generator-rectifier arc welding power source is a combination of an alternating current generator and static rectifiers with the associated control and indicating devices required to produce either alternating or direct current suitable for arc welding.

NEMA Standard 1-11-1983.

AC TRANSFORMER ARC WELDING POWER SOURCE

An ac transformer arc welding power source utilizes a transformer having isolated primary and secondary windings with the associated control and indicating devices required to produce an alternating current suitable for arc welding.

NEMA Standard 1-11-1983.

AC/DC TRANSFORMER-RECTIFIER ARC WELDING POWER SOURCE

An ac/dc transformer-rectifier arc welding power source is a combination of a transformer, having isolated primary and secondary windings, and static rectifiers with the associated control and indicating devices required to produce either alternating or direct current suitable for arc welding.

NEMA Standard 1-11-1983.

ASSOCIATED ELECTRICAL ATTACHMENTS

Associated electrical attachments are those electrical controls, cables, accessories, and such, attached to the arc welding power source to facilitate control, function, or operation and that are external to the power source enclosure.

NEMA Standard 1-11-1983.

AUXILIARY POWER SUPPLY

An auxiliary power supply is a separate source of power available to the operator, which is provided by the arc welding power source for purposes other than supplying power to the welding arc.

NEMA Standard 1-11-1983.

CONSTANT CURRENT ARC WELDING POWER SOURCE

A constant current arc welding power source is a power source that has means for adjusting the load current and that has a static volt ampere curve that tends to produce a relatively constant load current. The load voltage, at a given load current, is responsive to the rate at which a consumable electrode is fed into the arc, except that, when a nonconsumable electrode is used, the load voltage is responsive to the electrode to work distance.

NEMA Standard 1-11-1983.

CONSTANT CURRENT/CONSTANT VOLTAGE ARC WELDING POWER SOURCE

A constant current/constant voltage arc welding power source is a power source that has the selectable characteristics of a constant current arc welding power source or constant voltage arc welding power source.

NEMA Standard 1-11-1983.

Copyright National Electrical Manufacturers Association
Provided by IHS under license with NEMA
No reproduction or networking permitted without license from IHS
Not for Resale

CONSTANT VOLTAGE ARC WELDING POWER SOURCE

A constant voltage arc welding power source is a power source which has means for adjusting the load voltage and has a static volt ampere curve that produces a relatively constant load voltage. The load current, at a given load voltage, is responsive to the rate at which a consumable electrode is fed into the arc.

NEMA Standard 1-11-1983.

DC GENERATOR ARC WELDING POWER SOURCE

A dc generator arc welding power source is a dc generator with the associated control and indicating devices required to produce direct current suitable for arc welding.

NEMA Standard 1-11-1983.

DC GENERATOR-RECTIFIER ARC WELDING POWER SOURCE

A dc generator-rectifier arc welding power source is a combination of an ac generator and static rectifiers with the associated control and indicating devices required to produce direct current suitable for arc welding.

NEMA Standard 1-11-1983.

DC TRANSFORMER-RECTIFIER ARC WELDING POWER SOURCE

A dc transformer-rectifier arc welding power source is a combination of a transformer, having isolated primary and secondary windings, and static rectifiers with the associated control and indicating devices required to produce direct current suitable for arc welding.

NEMA Standard 1-11-1983.

DUTY CYCLE

Duty cycle, expressed in percent, is the ratio of arc time to total time.

For the purpose of these standards, the time period of one complete test cycle shall be 10 minutes. (For example, in the case of a 60 percent duty cycle, load shall be applied continuously for 6 minutes and shall be off for 4 minutes.)

NEMA Standard 1-24-1962.

EFFICIENCY

The efficiency of an arc welding power source is the ratio of the power output at the welding terminals to the total power input. Unless otherwise specified, the efficiency shall be given when the power source is operated at rated output.

NEMA Standard 1-11-1983.

ENCLOSURE

An arc welding power source enclosure is the surrounding case or housing constructed to provide a degree of protection to personnel against incidental contact with energized and moving parts and to provide a degree of protection to the power source against damage that will adversely affect its operation.

NEMA Standard 1-11-1983.

ELECTRODE LEAD

An electrode lead is the welding lead between one of the welding terminals of the arc welding power source and the welding electrode.

NEMA Standard 1-11-1983.

ENGINE GENERATOR ARC WELDING POWER SOURCE

An engine generator arc welding power source is a power source that consists of an engine mechanically connected to, and mounted with, one or more arc welding generators.

NEMA Standard 1-11-1983.

FRAME

The frame of an arc welding power source is a supporting structure provided to increase the strength and rigidity of the enclosure, and to provide means for mounting the various parts of the power source, or both.

NEMA Standard 1-11-1983.

HAND-HELD ASSEMBLY

An assembly or device that is designed to be supported and manipulated by hand during use.

NEMA Standard 1-11-1983.

HIGH FREQUENCY STABILIZED ARC WELDING POWER SOURCE

A high frequency stabilized arc welding power source is a constant current arc welding power source that includes a high-frequency arc stabilizer as an integral part of the power source and the suitable controls required to produce welding current. It is primarily intended for gas tungsten-arc welding.

NEMA Standard 1-11-1983.

INPUT CURRENT

Input current is the amperage drawn from the electrical power supply to operate an arc welding power source.

NEMA Standard 1-11-1983.

INPUT RATING

For an arc welding power source operating from an electrical power supply, the input rating consists of the rated input voltage(s), number of phases, rated frequency(s), and the input current when the power source is delivering rated output.

NEMA Standard 1-11-1983.

JACK

A female contact device designed to mate with a jack plug to establish an electrical connection.

NEMA Standard 1-11-1983.

JACK PLUG

A male device, usually associated with welding lead(s), that is inserted into a jack to establish an electrical connection of the welding circuit.

NEMA Standard 1-11-1983.

Copyright National Electrical Manufacturers Association
Provided by IHS under license with NEMA
No reproduction or networking permitted without license from IHS
Not for Resale

LIVE PART

A live part is a part at a potential different from ground, which could render an electrical shock.

NEMA Standard 11-17-1988.

LOAD CURRENT

The load current is the amperage flowing in the welding circuit when a load is applied to the welding terminals.

NEMA Standard 1-11-1983.

LOAD VOLTAGE

Load voltage is the voltage between the welding terminals of the arc welding power source when load current is flowing in the welding circuit.

NEMA Standard 1-11-1983.

MOTOR GENERATOR ARC WELDING POWER SOURCE

A motor generator arc welding power source is a power source that consists of an electric motor mechanically connected to and mounted with one or more arc welding generators.

NEMA Standard 1-11-1983.

MULTIPLE OPERATOR ARC WELDING POWER SOURCE

A multiple operator arc welding power source is a power source that supplies two or more welding arcs through suitable output control devices without objectionable arc interaction.

NEMA Standard 1-11-1983.

MULTIPLE OPERATOR WELDING OUTLET

A multiple operator welding outlet is a control station containing an adjustable output control device for adjusting load current supplied from a multiple operator arc welding power source.

NEMA Standard 1-11-1983.

NEMA CLASS I ARC WELDING POWER SOURCE

A NEMA Class I arc welding power source is characterized by its ability to deliver rated output at duty cycles of 60, 80, or 100 percent. If a power source is manufactured in accordance with the applicable standards for Class I power sources in this publication, it shall be marked "NEMA Class I (60)", "NEMA Class I (80)", or "NEMA Class I (100)".

A NEMA Class I arc welding power source is a completely assembled arc welding power source that is comprised of the characteristics listed below:

1. A constant current power source, a constant voltage power source, or a constant current/constant voltage power source, and;
2. A single operator power source, and;
3. One of the following:
   a. DC generator arc welding power source;
   b. AC generator arc welding power source;
   c. DC generator-rectifier arc welding power source;
   d. AC/DC generator-rectifier arc welding power source;
   e. AC transformer arc welding power source;
   f. DC transformer arc welding power source;
   g. AC/DC transformer-rectifier arc welding power source.

NEMA Standard 1-11-1983.

NEMA CLASS II ARC WELDING POWER SOURCE

A NEMA Class II arc welding power source is characterized by its ability to deliver rated output at duty cycles of 30, 40, or 50 percent. If a power source is manufactured in accordance with the applicable standards for Class II power sources in this publication, it shall be marked "NEMA Class II (30)", "NEMA Class II (40)", or "NEMA Class II (50)".

A NEMA Class II arc welding power source is a completely assembled arc welding power source which is comprised of the characteristics listed below:

1. A constant current power source, a constant voltage power source, or a constant current/constant voltage power source, and;
2. A single operator power source, and;
3. One of the following:
   a. DC generator arc welding power source;
   b. AC generator arc welding power source;
   c. DC generator-rectifier arc welding power source;
   d. AC/DC generator-rectifier arc welding power source;
   e. AC transformer arc welding power source;
   f. DC transformer arc welding power source;
   g. AC/DC transformer-rectifier arc welding power source.

NEMA Standard 1-11-1983.

NEMA CLASS III ARC WELDING POWER SOURCE

A NEMA Class III arc welding power source is characterized by its ability to deliver rated output at a duty cycle of 20 percent. If a power source is manufactured in accordance with the applicable standards for Class III power sources in this publication, it shall be marked "NEMA Class III (20)".

A NEMA Class III arc welding power source is a completely assembled arc welding power source that is comprised of the characteristics listed below:

1. A constant current power source; and
2. A single operator power source; and
3. One of the following:
   a. AC transformer arc welding power source;
   b. DC transformer-rectifier arc welding power source;
   c. AC/DC transformer-rectifier arc welding power source.

NEMA Standard 1-11-1983.

Copyright National Electrical Manufacturers Association
Provided by IHS under license with NEMA
No reproduction or networking permitted without license from IHS
Not for Resale

OPEN CIRCUIT VOLTAGE

Open circuit voltage is the voltage, excluding high frequency stabilization voltage, between the welding terminals of the arc welding power source when no load current is flowing in the welding circuit.

NEMA Standard 1-11-1983.

PERCENT RIPPLE VOLTAGE

Percent ripple voltage is the ratio, expressed as a percentage, of the effective (root mean square) value of the ripple voltage to the average value of a pulsating unidirectional voltage. The root-mean-square value of the ripple voltage may be measured with a root-mean-square indicating meter in series with a capacitor having sufficiently low impedance so as not to affect appreciably the indication of the voltmeter. Rectifier type instruments should not be used.

Authorized Engineering Information 5-14-1970.

RATED FREQUENCY

Rated frequency (expressed in hertz) is the supply voltage frequency at which an arc welding power source is designed to operate.

NEMA Standard 1-11-1983.

RATED INPUT VOLTAGE

The rated input voltage is the supply voltage(s) at which an arc welding power source is designed to operate.

NEMA Standard 1-11-1983.

RATED LOAD CURRENT

The rated load current is the load current at rated output.

NEMA Standard 1-11-1983.

RATED LOAD SPEED

The rated load speed of an arc welding power source is the rotational speed at which an arc welding generator is designed to operate when delivering rated output.

NEMA Standard 1-11-1983.

RATED LOAD VOLTAGE

Rated load voltage is the load voltage at rated output.

NEMA Standard 1-11-1983.

RATED OUTPUT

The rated output of an arc welding power source shall consist of a designated limit of output or capacity expressed as rated load voltage, rated load current, and rated duty cycle when the power source is operated at rated input voltage(s) and rated frequency(s), or at rated load speed.

NEMA Standard 1-11-1983.

SERVICE LINE HOSES

Service line hoses are the hoses to or from an arc welding power source, including connectors, supplying shielding medium, cooling medium, and providing means for fume removal, and/or nonelectrical power or control.

NEMA Standard 1-11-1983.

SINGLE OPERATOR ARC WELDING POWER SOURCE

A single operator arc welding power source is a power source which is designed to deliver load current to only one welding arc.

NEMA Standard 1-11-1983.

SLOPE OF THE STATIC VOLT AMPERE CURVE

The slope of the static volt ampere curve is the ratio of load voltage change to the change in load current expressed in volts per 100 amperes.

NEMA Standard 7-14-1971.

STATIC VOLT AMPERE CHARACTERISTICS

The static volt ampere characteristics is the curve or family of curves which gives the steady state load voltage of an arc welding power source as ordinate, plotted against the steady state load current as abscissa.

NEMA Standard 1-11-1983.

WELDING CIRCUIT

The welding circuit consists of all attachments connected to the welding terminals of the arc welding power source.

NEMA Standard 1-11-1983.

WELDING LEADS

Welding leads conduct the welding power and, when provided, high frequency energy from the welding terminals to the welding arc.

NEMA Standard 1-11-1983.

WELDING TERMINALS

Welding terminals are those terminals of an arc welding power source which furnish welding power and, when provided, high frequency energy for the welding arc.

NEMA Standard 1-11-1983.

WORK LEAD

A work lead is the welding lead between one of the welding terminals of the arc welding power source and the work.

NEMA Standard 1-11-1983.

Copyright National Electrical Manufacturers Association
Provided by IHS under license with NEMA
No reproduction or networking permitted without license from IHS
Not for Resale

Section 2
GENERAL

2.1 SUITABILITY OF OPERATION

The characteristics of an arc welding power source conforming to these standards shall be such that a qualified operator, or appropriate mechanically controlled equipment, can, by following the manufacturer's recommended installation and operating procedures, weld satisfactorily within the specified operating range of the power source and with the welding processes for which it is intended to be used.

NEMA Standard 1-11-1983.

2.2 SERVICE CONDITIONS

Service conditions, other than those specified as usual, may have some detrimental effect on the arc welding power source. Such effect depends upon the degree of departure from usual operating conditions and the severity of the environment to which the power source is exposed. Of principal concern are unusual service conditions which may cause abnormal deterioration of the insulation system, electrical breakdown, or mechanical wear, resulting in premature failure. The manufacturer of the power source should be consulted for further information regarding any unusual service conditions.

Authorized Engineering Information 1-11-1983.

2.3 USUAL SERVICE CONDITIONS

An arc welding power source constructed in accordance with these standards shall be capable of operation, when the following conditions prevail:

1. Where the ambient temperature is in the range of 0°C to 40°C;
2. Where the altitude is between sea level and 3300 feet (1000 meters);
3. When exposed to gases and dust only to the extent of those normally produced by the welding arc;
4. When the input line voltage varies within the range of ±10 percent of input line voltage rating of the arc welding power source; and
5. Where the base of a power source is within 15 degrees of horizontal.

NEMA Standard 1-11-1983.

2.4 UNUSUAL SERVICE CONDITIONS

Examples of unusual service conditions are exposure to:

1. Combustible or conducting dusts;
2. Chemical fumes or flammable gases;
3. Rain, steam, or oil vapor;
4. Vermin infestation or atmosphere conducive to the growth of fungus;
5. Very dirty, corrosive, explosive, or abrasive environment;
6. High radiant or conducted heat;
7. Abnormal shock or vibration;
8. Nuclear radiation;
9. Severe weather conditions;
10. Seacoast and shipboard conditions;
11. Continuous average relative humidity above 90 percent or below 10 percent; or
12. Altitudes in excess of 3300 feet (1000 meters).

Authorized Engineering Information 1-11-1983.

2.5 INSTALLATION AND OPERATION

Arc welding power sources shall be installed and operated in accordance with the *National Electrical Code,* state and local codes as applicable, the manufacturers instructions, and applicable safety specifications.

NEMA Standard 11-17-1988.

Copyright National Electrical Manufacturers Association
Provided by IHS under license with NEMA
No reproduction or networking permitted without license from IHS
Not for Resale

Section 3
CONSTRUCTION REQUIREMENTS – MECHANICAL CONSIDERATIONS

3.1 FRAME AND ENCLOSURE

An arc welding power source shall be so formed and assembled that it will have the strength and rigidity necessary to withstand the normal service to which it is likely to be subjected without increasing its shock, fire, or other hazard. An arc welding power source shall be provided with a case or cabinet that shall enclose all current carrying parts and hazardous moving parts (such as motors, pulleys, belts, fans, gears, and such) except that the following need not be enclosed:

1. A flexible supply cord or cable and welding leads; and
2. Ungrounded output terminals for the connection of welding leads, jack plugs, jacks, or similar parts connected to the output circuit and limited in open circuit voltage in accordance with 5.3 if they are suitably protected against unintentional contact.

NEMA Standard 1-11-1983.

Protection will usually be afforded if: (a) jacks and uninsulated current carrying parts of the power source, including the specified output terminal lugs in the case of threaded type connections, are recessed behind the vertical plane of the access opening; (b) an uninsulated current carrying part of the power source is recessed for a distance not less than one half of the minimum dimension of the opening behind which the current carrying part is located; or (c) a hinged cover, or a protective guard or cover, which is removable only by the use of tools, with smooth edged slots or openings for the cable is provided over the terminals.

Authorized Engineering Information 1-11-1983.

3.2 ENCLOSURE CONSTRUCTION

3.2.1 An enclosure shall be constructed of either sheet metal, cast metal, or a nonmetallic material. If the enclosure is constructed from sheet metal, the thickness shall not be less than that given in Tables 3-1 or 3-2 (see also 3.2.2). These tables are based on a uniform deflection of the enclosure surface for any given load concentrated at the center of the surface regardless of metal thickness. The thickness of a cast metal enclosure shall be not less than that given in Table 3-3. If the enclosure is constructed of nonmetallic material, the material shall conform to Class 94V-0 of ANSI/UL 94, *Test for Flammability of Plastic Materials for Parts in Devices and Appliances.* The enclosure shall have a mechanical strength at least equivalent to a sheet metal enclosure constructed in accordance with Table 3-1 or 3-2.

3.2.2 The thickness of sheet metal in an area where provision is made for connection of a wiring system in the field shall not be less than 0.053 inch (1.35 mm) if uncoated steel, 0.056 inch (1.42 mm) if galvanized steel and not less than 0.075 inch (1.91 mm) for aluminum, copper, and brass.

3.2.3 Construction of the power source enclosure shall be such that there are no sharp projections or edges on the exposed exterior surfaces of the enclosure that are likely to cause accidental injury to personnel.

NEMA Standard 1-11-1983.

3.2.4 Among the factors to consider in determining the suitability of an enclosure are its: (1) physical strength, (2) resistance to impact, (3) moisture absorptive properties, (4) combustibility, (5) resistance to corrosion, (6) resistance to distortion at temperatures to which the enclosure may be subjected under conditions of normal or abnormal use, and (7) resistance to ignition from electrical sources. For a nonmetallic enclosure, all of these factors are considered with respect to thermal aging.

3.2.5 With reference to Tables 3-1 and 3-2, a supporting frame is a structure of angle or channel or a folded rigid section of sheet metal that is rigidly attached to and has essentially the same outside dimensions as the enclosure surface and has sufficient torsional rigidity to resist the bending moments that may be applied to the surface of the enclosure when it is deflected. Construction that is considered to have equivalent reinforcing may be accomplished by designs that will produce a structure that is as rigid as one built with a frame of angles or channels.

3.2.6 Construction considered to be without supporting frame includes: (a) single sheet with single formed flanges (formed edges), (b) a single sheet that is corrugated or ribbed, (c) an enclosure surface loosely attached to a frame (for example, with spring clips), or (d) an enclosure formed or fabricated from sheet metal.

3.2.7 The minimum thickness of an enclosure without supporting frame may be less than shown in Tables 3-1, 3-2, and 3-3 if the enclosure is so reinforced that if subjected to bending and torsion forces, its strength and rigidity are shown to be not less than the corresponding properties of an enclosure of the same maximum length and width having the required thickness of metal.

Authorized Engineering Information 1-11-1983.

Copyright National Electrical Manufacturers Association
Provided by IHS under license with NEMA
No reproduction or networking permitted without license from IHS
Not for Resale

3.3 OPENINGS IN ENCLOSURES

The suitability of an opening in the enclosure of an arc welding power source shall be determined in accordance with 3.3.1 or 3.3.2, except that for engine or motor driven power sources, the suitability of the openings shall be determined in accordance with 3.3.3. Any part of the outer enclosure that is intended to be opened or removed without the use of tools by the user of the equipment (to permit the attachment of accessories, to allow access to means for making operating adjustments, or for other reasons) shall be opened or removed prior to examination.

3.3.1 Openings in Other Than Hand-Held Arc Welding Power Source Assemblies

1. An opening that will not permit entrance of 0.750 inch (19 mm) diameter rod shall be suitable if a 0.500 inch (12.7 mm) diameter (D) probe, illustrated in Figure 3-1, cannot be made to touch film-coated wire, uninsulated live part(s), hazardous moving part(s) or any combination thereof, when it is inserted with a one pound force (4.45 N) through the opening.

NEMA Standard 1-11-1983.

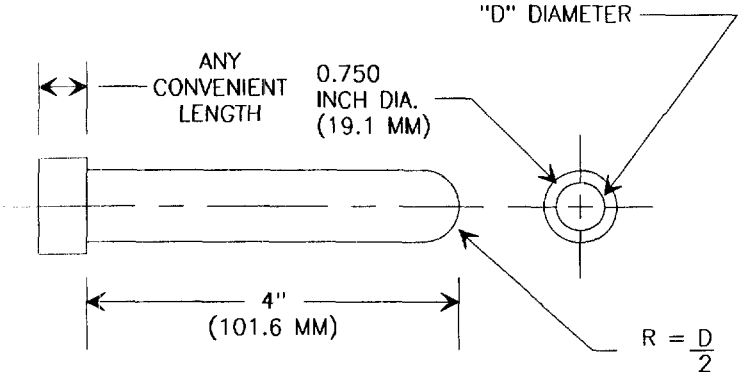

Figure 3-1
PROBE

2. An opening that will permit entrance of a 0.750 inch (19 mm) diameter rod shall be suitable if there is no film-coated wire, uninsulated live part(s), hazardous moving part(s) or any combination thereof; (1) less than X inches (X mm) from the perimeter of the opening, and; (2) within the volume generated by projecting the perimeter X inches (X mm) normal to its plane when X equals five times the diameter of the largest diameter rod (but not less than 4 inches (101.6 mm) that can be inserted through the opening. See Figure 3-2.

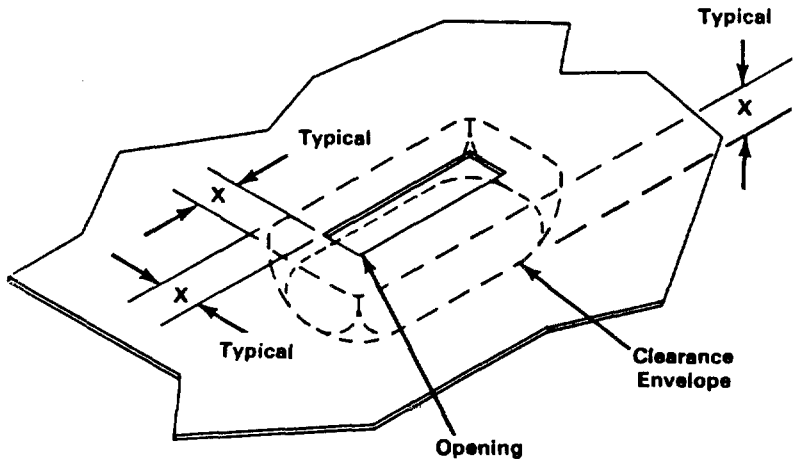

Figure 3-2
ENCLOSURE OPENING

3.3.2 Openings in Hand Held Arc Welding Power Source Assemblies

An opening in a hand-held assembly shall be suitable if a 0.375 inch (9.5 mm) diameter (D) probe, illustrated in Figure 3-1, when inserted into the opening to a maximum of 1 inch (25.4 mm) cannot be made to touch any film-coated wire, uninsulated live part(s), hazardous moving part(s), or any combination thereof.

3.3.3 Openings in Engine or Motor Driven Power Sources

Openings in the enclosures for engine or motor driven power sources shall provide protection in accordance with 3.3.1 and 3.3.2. Where in service access to the equipment is required and enclosure protection cannot reasonably be assured, a label calling attention to any potential hazard shall be prominently displayed on the equipment.

NEMA Standard 1-11-1983.

3.4 CORROSION PROTECTION

All metallic parts shall be painted, plated, or otherwise protected against corrosion if the deterioration of such unprotected parts would be likely to result in a hazardous condition.

NEMA Standard 1-11-1983.

3.5 SERVICE LINE HOSES

If supplied as part of the arc welding power source, service line hoses and hose connections shall comply with Rubber Manufacturers Association Inc. Publica-

Copyright National Electrical Manufacturers Association
Provided by IHS under license with NEMA
No reproduction or networking permitted without license from IHS
Not for Resale

tion No. IP-7, *Specification for Rubber Welding Hose,* or IP-2, *Hose Handbook,* and Compressed Gas Association Inc. Publication No. E1, *Standard Connections for Regulators, Outlets, Torches, and Fitted Hose for Welding and Cutting Equipment,* or E-2, *Hose Line Check Value Standards for Welding and Cutting.*

NEMA Standard 11-17-1988.

3.6 WATER COOLING

Any device or system using water for cooling, other than an integrated recirculating system, shall be capable of operating at an inlet water pressure ranging from 30 psi (207 kPa) to 75 psi (517 kPa) and a water inlet temperature up to 49°C. For rating purposes, the water inlet pressure shall be 30 psi (207 kPa) at a water inlet temperature of 49°C.

3.7 BRUSHES

Brushes shall be in accordance with ANSI/NEMA Standards Publication No. CB 1, *Brushes for Electrical Machines.*

NEMA Standard 11-17-1988.

3.8 JERK AND DROP TESTS

3.8.1 Jerk Test

If an eye or lug is provided for the purpose of lifting an assembled arc welding power source, such device shall be capable of withstanding a free fall jerk test. This test shall be made with the power source equipped with all associated attachments (excluding trailers, carts, and wheel running gears) that are likely to be installed and, in the case of engine driven power sources, completely serviced and ready for operation.

The unit shall be suspended from a rigid member by a chain or cable attached to the lifting eye or lug, and it shall be positioned for a direct free fall. The chain or cable suspension assembly shall be arranged to provide for a free fall of at least 6 inches (152 mm) before the unit is caught in suspension bringing the full force of the fall to bear on the lifting eye or lug. Three such falls shall be made.

3.8.2 Drop Test

An assembled arc welding power source equipped with all associated attachments (excluding trailers, carts, and wheel running gear) that are likely to be installed and, in the case of engine driven power sources completely serviced and ready for operation, shall be capable of withstanding a drop test. This test shall consist of three drops onto a hard and rigid surface from a height of not less than 6 inches (152 mm). These drops shall be so arranged that each drop shall strike on a bottom edge different from that of any other drop.

3.8.3 Test Conformance

After the above tests, the power source shall still conform to the provisions of this standard, other than the foregoing 3.8.1 and 3.8.2, in all respects even though there may be some deformation of the structural parts of enclosure.

NEMA Standard 1-11-1983.

3.9 STACKING OF ARC WELDING POWER SOURCES

If the manufacturer represents a power source for stacking, its enclosure, with all panels securely in place, shall be manufactured so that it will have the strength and rigidity to support the manufacturer's specified number and types of additional arc welding power sources. The locating means for stacking the arc welding power sources shall be such that the lower units cannot be lifted by the lifting yoke or eye of the top arc welding power source, unless the manufacturer represents that all of the power sources can be lifted as a unit.

NEMA Standard 1-11-1983.

Copyright National Electrical Manufacturers Association
Provided by IHS under license with NEMA
No reproduction or networking permitted without license from IHS
Not for Resale

Table 3-1
MINIMUM THICKNESS OF SHEET METAL FOR ENCLOSURES – CARBON STEEL OR STAINLESS STEEL

Without Supporting Frame(a)				With Supporting Frame or Equivalent Reinforcing (b)				Minimum Thickness			
Maximum Width(c), Inches (mm)		Maximum Length(d) of Supported Edge, Inches (mm)		Maximum Width(c), Inches (mm)		Maximum Length, Inches (mm)		Uncoated, Inches (mm)		Zinc Coated Inches (mm)	
4.0	(102)	Not limited		6.25	(159)	Not limited					
4.75	(121)	5.75	(146)	6.75	(171)	8.25	(210)	0.020	(0.51)	0.023	(0.58)
6.0	(152)	Not limited		9.5	(241)	Not limited					
7.0	(179)	8.75	(222)	10.0	(254)	12.5	(318)	0.026	(0.66)	0.029	(0.74)
8.0	(203)	Not limited		2.0	(305)	Not limited					
9.0	(229)	11.5	(292)	13.0	(330)	16.0	(406)	0.032	(0.81)	0.034	(0.86)
12.5	(318)	Not limited		19.5	(495)	Not limited					
14.0	(356)	18.0	(457)	21.0	(533)	25.0	(635)	0.042	(1.07)	0.045	(1.14)
18.0	(457)	Not limited		27.0	(686)	Not limited					
20.0	(508)	25.0	(635)	29.0	(737)	36.0	(914)	0.053	(1.35)	0.056	(1.42)
22.0	(559)	Not limited		33.0	(838)	Not limited					
25.0	(635)	31.0	(787)	35.0	(889)	43.0	(1092)	0.060	(1.52)	0.063	(1.60)
25.0	(635)	Not limited		39.0	(991)	Not limited					
29.0	(737)	36.0	(914)	41.0	(1041)	51.0	(1295)	0.067	(1.70)	0.070	(1.78)
33.0	(838)	Not limited		51.0	(1295)	Not limited					
38.0	(965)	47.0	(1194)	54.0	(1372)	66.0	(1676)	0.080	(2.03)	0.084	(2.13)
42.0	(1067)	Not limited		64.0	(1626)	Not limited					
47.0	(1194)	59.0	(1499)	68.0	(1727)	84.0	(2134)	0.093	(2.36)	0.097	(2.46)
52.0	(1321)	Not limited		80.0	(2032)	Not limited					
60.0	(1524)	74.0	(1880)	84.0	(2134)	103.0	(2616)	0.108	(2.74)	0.111	(2.82)
63.0	(1606)	Not limited		97.0	(2464)	Not limited					
73.0	(1854)	90.0	(2286)	103.0	(2616)	127.0	(3226)	0.123	(3.12)	0.126	(3.20)

(a) See 3.2.6

(b) See 3.2.5

(c) The width is the smaller dimension of a rectangular piece of sheet metal that is part of an enclosure. Adjacent surfaces of an enclosure may have supports in common and be made of a single sheet.

(d) Not limited applies only if the edge of the surface is flanged at least 0.500 inch (12.7 mm) or fastened to adjacent surfaces not normally removed in use.

Table 3-1 data are reprinted by permission of Underwriters Laboratories from ANSI/UL 551, **Transformer-Type Arc Welding Machines.**

Copyright National Electrical Manufacturers Association
Provided by IHS under license with NEMA
No reproduction or networking permitted without license from IHS
Not for Resale

Table 3-2
MINIMUM THICKNESS OF SHEET METAL FOR ENCLOSURES – ALUMINUM, COPPER, OR BRASS

Without Supporting Frame(a)				With Supporting Frame or Equivalent Reinforcing (b)				Minimum Thickness	
Maximum Width(c), Inches (mm)		Maximum Length(d) of Supported Edge, Inches (mm)		Maximum Width(c), Inches (mm)		Maximum Length, Inches (mm)		Uncoated, Inches (mm)	
3.0	(76)	Not limited		7.0	(179)	Not limited			
3.5	(90)	4.0	(102)	8.5	(216)	9.5	(241)	0.023	(0.58)
4.0	(102)	Not limited		10.0	(254)	Not limited			
5.0	(127)	6.0	(152)	10.5	(267)	13.5	(343)	0.029	(0.74)
6.0	(152)	Not limited		14.0	(356)	Not limited			
6.5	(165)	8.0	(203)	15.0	(381)	18.0	(457)	0.036	(0.91)
8.0	(203)	Not limited		19.0	(483)	Not limited			
9.5	(241)	11.5	(292)	21.0	(533)	25.0	(635)	0.045	(1.14)
12.0	(305)	Not limited		28.0	(711)	Not limited			
14.0	(356)	16.0	(406)	30.0	(762)	37.0	(940)	0.058	(1.47)
18.0	(457)	Not limited		42.0	(1067)	Not limited			
20.0	(508)	25.0	(635)	45.0	(1143)	55.0	(1397)	0.075	(1.90)
25.0	(635)	Not limited		60.0	(1524)	Not limited			
29.0	(737)	36.0	(914)	64.0	(1626)	78.0	(1981)	0.095	(2.41)
37.0	(939)	Not limited		87.0	(2210)	Not limited			
42.0	(1067)	53.0	(1346)	93.0	(2362)	114.0	(2896)	0.122	(3.10)
52.0	(1321)	Not limited		123.0	(3124)	Not limited			
60.0	(1524)	74.0	(1880)	130.0	(3302)	160.0	(40634)	0.153	(3.89)

(a) See par. 3.2.6

(b) See par. 3.2.5

(c) The width is the smaller dimension of a rectangular piece of sheet metal that is part of an enclosure. Adjacent surfaces of an enclosure may have supports in common and be made of a single sheet.

(d) Not limited applies only if the edge of the surface is flanged at least 0.500 inch (12.7 mm) or fastened to adjacent surfaces not normally removed in use.

Table 3-2 data are reprinted by permission of Underwriters Laboratories from ANSI/UL 551.

Copyright National Electrical Manufacturers Association
Provided by IHS under license with NEMA
No reproduction or networking permitted without license from IHS
Not for Resale

Table 3-3
MINIMUM THICKNESS OF CAST METAL FOR ENCLOSURES

Dimensions or Location or Area Involved	Minimum Thickness			
	Cast Metal Other Than Die-Cast		Die-Cast Metal	
	Inches	(mm)	Inches	(mm)
Area of 24 square inches (154.8 = square cm) or less and having no dimension greater than 6 inches (152 mm)	0.125	(3.18)	0.062[a]	(1.59)
Area greater than 24 inches squared (154.8 cm squared) or having any dimension greater than 6 inches (152 mm)	0.125	(3.18)	0.094	(2.38)
At a threaded conduit hole	0.250	(6.15)	0.250	(6.35)
At an unthreaded conduit hole	0.125	(3.18)	0.125	(3.18)

[a]The area limitation for metal 0.062 inch (1.59 mm) thick can be obtained by the provision of suitable reinforcing ribs subdividing a larger area.

Table 3-3 data are reprinted by permission of Underwriters Laboratories from ANSI/UL-551.

Copyright National Electrical Manufacturers Association
Provided by IHS under license with NEMA
No reproduction or networking permitted without license from IHS
Not for Resale

Section 4
CONSTRUCTION REQUIREMENTS – ELECTRICAL CONSIDERATIONS

4.1 POWER SUPPLY CONNECTION – GENERAL

Where power supply conductors pass through an opening in a barrier or enclosure, the edges of the opening shall be smoothly rounded or shall be provided with a secured and smooth rounded bushing.

The ampacity used for conductor selection shall be calculated from the following equation:

$$I_r = \sqrt{I_a^2 d + I_b^2 (1-d)}$$

Where:

I_r = Ampacity requirements in amperes.

I_a = Nameplate input current at rated voltage and at rated output.

I_b = Input current at rated input voltage and at no load

$$d = \frac{\text{Rated Duty Cycle (Percent)}}{100}$$

When a flexible cord is used for power supply connection, it shall be sized in accordance with Table 4-1. Where wiring terminals or terminal leads are provided, they shall be suitable for the connection of power supply conductors which are sized in accordance with Table 4-2.

NEMA Standard 11-17-1988.

Table 4-1
CONDUCTOR SIZE OF CORDS

Required Ampacity (I_r) [a]		Conductor Size, AWG
Two Conductor	Three Conductor	
10	7	18
13	10	16
18	15	14
25	20	12
30	25	10
40	35	8
55	45	6
70	60	4
95	80	2

[a] The ampacities are applicable to current carrying conductors in accordance with Table 400-5 of the **1987 National Electrical Code.** The ampacities listed above are based upon a 30°C ambient temperature. A conductor used for equipment grounding is not considered to be a current carrying conductor.

Table 4-2
SIZE OF INSULATED COPPER CONDUCTORS
(Not More Than Three Conductors in Raceway or Cable)

Required Ampacity (I_r)[a]	Conductor Size, AWG	Required Ampacity (I_r)[a]	Conductor Size, AWG
15	14	150	0
20	12	175	00
30	10	200	000
50	8	230	0000
65	6	255	250 kcmil
85	4	285	300 kcmil
100	3	310	350 kcmil
115	2	335	400 kcmil
130	1	380	500 kcmil

[a] The ampacities in Table 4-2 are based upon 75°C temperature rating of conductors with ampacities in accordance with Table 310-16 of the **1987 National Electrical Code.** Ampacities listed above are based upon a 30°C ambient temperature. A conductor used for equipment grounding is not considered to be a current carrying conductor.

4.2 POWER SUPPLY BY FLEXIBLE CORD

When a flexible cord is used as a part of the power source for power supply connection, it shall be a type S, SO, ST, or STO except that a NEMA Class III power source may, alternatively, be provided with a Type SJ, SJO, SJT, SJTO, or SPT-3 flexible cord. Such flexible cords shall not be less than 5 feet (1.52 meters) in length as measured from the strain relief provided at the enclosure of the power source to the attachment plug terminal provided for connection to the power supply receptacle.

A NEMA Class III power source that has wheels, casters, or other obvious means of mobility shall be equipped with a flexible cord. An attachment plug shall be provided on the flexible cord and it shall be selected to conform to NEMA Standards Publication No. WD 1, *General-Purpose Wiring Devices,* for the input voltage and current rating of the power source. The attachment plug terminating the flexible cord shall be of the grounding type. When a NEMA Class III power source is provided with a switch or circuit breaker that complies with the requirements of 4.10.3, the rating of the attachment plug shall not be less than 75 percent of the input current rating of the power source.

Copyright National Electrical Manufacturers Association
Provided by IHS under license with NEMA
No reproduction or networking permitted without license from IHS
Not for Resale

Flexible cords shall be provided with strain relief so that an external pulling force, as specified in Table 4-3, exerted for one minute on the flexible cord from any direction will not be transmitted to the terminals, splices, or internal wiring of the power source.

Means shall be provided to prevent the flexible cord from being pushed into the enclosures through the cord entry hole if such displacement is likely to: (1) subject the cord to mechanical damage, (2) expose the cord to a temperature higher than that for which it is intended, or (3) reduce spacings (such as to a metal strain relief clamp) below those specified in Table 4-5.

NEMA Standard 1-11-1983.

Table 4-3
EXTERNAL PULLING FORCE

Wire Size	Pulling Force	
AWG	Lbs.	N
16–18	35	155.9
12–14	50	222.4
10–Larger	100	444.8

4.3 POWER SUPPLY BY PERMANENT WIRING SYSTEM

If a power source is not provided with a flexible cord for power supply connection, it shall be provided with input wiring terminals or input terminal leads which shall be enclosed and accessible only by means of tools. A hole, knockout, or fitting shall be provided to facilitate connection to a permanent wiring system. The diameter and the size of the flat surface surrounding a hole or knockout shall conform to Table 4-4.

NEMA Standard 1-11-1983.

4.4 GROUNDING

All exposed noncurrent carrying conductive parts, which might become energized under the rigors of normal use and handling shall have metal-to-metal contact or shall be otherwise electrically bonded together and connected to a common grounding means.

The grounding means shall be:

1. A part of the power source;
2. Used only for grounding purposes;
3. Unlikely to be disassembled during operation or servicing;
4. Of adequate size for the grounding conductor as specified in accordance with Table 250-95 and article 250-51(2) of the *1987 National Electrical Code;* and
5. Located in the vicinity of the supply connections.

The grounding means shall be a metal stud, binding post, pressure connector, binding screw, uninsulated or insulated leads, internally threaded boss, or equivalent means. Solder alone shall not be relied upon as a means for grounding connections.

When the grounding means is an insulated lead, it shall have a green colored surface with or without one or more yellow stripes. In all other cases, the grounding means shall be identified by green coloring or by a legible marking with the symbols  or , alternatively, with the letter(s) G, GR, GRD, GND or GROUND.

NEMA Standard 1-11-1983.

4.5 CORROSION PROTECTION

When materials subject to corrosion, such as iron, steel, or aluminum, etc., are used as part of the wiring terminal or grounding means, such parts shall be plated or otherwise protected to maintain the integrity of the electrical connection.

NEMA Standard 1-11-1983.

Table 4-4
DIAMETER OF KNOCKOUT OR HOLE FOR CONDUIT AND WIDTH OF SURROUNDING FLAT SURFACE

Size of Supply Conductor, AWG		Trade Size Conduit Nom.	Knockout Clearance Hole					
			Minimum		Nominal		Maximum	
Single Phase	Three Phase		Inches	(mm)	Inches	(mm)	Inches	(mm)
14–10	14–10	½	0.859	(21.82)	0.875	(22.22)	0.906	(23.01)
8	8	¾	1.094	(27.79)	1.109	(28.17)	1.141	(28.98)
6–4	6–4	1	1.359	(34.52)	1.375	(34.92)	1.406	(35.17)
3–1	3–2	1¼	1.719	(43.66)	1.734	(44.04)	1.766	(44.86)
1/0–2/0	1–1/0	1½	1.958	(49.73)	1.984	(50.39)	2.016	(51.21)
3/0–4/0	2/0–3/0	2	2.433	(61.80)	2.469	(62.71)	2.500	(63.50)
250–300 kcmil	4/0–200 kcmil	2½	2.938	(74.62)	2.969	(75.41)	3.000	(76.20)

Copyright National Electrical Manufacturers Association
Provided by IHS under license with NEMA
No reproduction or networking permitted without license from IHS
Not for Resale

Table 4-5
SPACINGS IN ARC WELDING POWER SOURCES[a]

r.m.s. Voltage Between Parts Involved (d, e)	At Wiring Terminals (b,c)				At Other Than Wiring Terminals							
					To other than Enclosure Walls				To walls of a metal enclosure (f, g)			
	Through Air		Over Surface		Through Air		Over Surface		Through Air		Over Surface	
	In.	(mm)	In.	(mm)	In.	(mm)	In.	(mm)	In.	(mm)	In.	(mm)
0 – 50	½	(12.7)	½	(12.7)	⅛	(3.18)	⅛	(3.18)	½	(12.7)	½	(12.7)
51 – 150	½	(12.7)	½	(12.7)	⅛	(3.18)	¼	(6.35)	½	(12.7)	½	(12.7)
151 – 300	½	(12.7)	½	(12.7)	¼	(6.35)	⅜	(9.53)	½	(12.7)	½	(12.7)
301 – 600	1	(25.4)	1	(25.4)	⅜	(9.53)	½	(12.7)	½	(12.7)	½	(12.7)

[a] Values do not apply to a turn of wire on a coil or to spacings between (1) two conductors of a coil, (2) a coil and its core, and (3) a coil and any other part of opposite polarity including the crossover lead. The spacings given in Table 4-5 do not apply to wiring devices (snap switches, lampholders, etc.), motors, printed circuit boards, potted circuits and devices, or other accessories for which there are standards established for such components.

[b] Wiring terminals are considered to be terminals to which supply connections are made in the field.

[c] The spacing between screw type terminals of opposite polarity shall be not less than 0.250 inch (6.35 mm) if the terminals are in the same plane.

[d] When the repetitive peak voltage on which the device is used is more than 1.5 times the rms volts, the peak voltage shall be divided by 2 to obtain an equivalent rms rating in volts.

[e] For grounded power systems, such as three phase four wire systems, the clearance and creepage distances to ground shall be governed by voltage to ground.

[f] A metal piece attached to the enclosure is considered to be a part of the enclosure if deformation of the enclosure is likely to reduce clearance and creepage distances between the metal piece and uninsulated live parts or film coated wire.

[g] For subassembly enclosures where clearance and creepage distances are rigidly maintained and when mounted inside another enclosure, the distances for "to other than enclosure walls" shall be permitted instead of "to walls of metal enclosure" but in no case shall they be less than 0.100 inch (2.54 mm).

4.6 OUTPUT PROVISIONS

4.6.1 Welding Leads

Welding leads supplied with the power source shall be of a size sufficient to limit the temperature to 85°C or to the temperature rating of the cable insulation, whichever is less, when operated at the rated load current and duty cycle of the power source.

When welding leads are supplied as integral parts of the power source, the attachment of such leads shall be so constructed to withstand an external pull, exerted for 1 minute from any direction, as specified in Table 4-3, without reducing electrical spacings below those specified in Table 4-5, or causing damage to any internal parts of the power source. However, the pull applied to the welding leads need not be more than that specified for the flexible cord used for the power supply connection.

At locations where a welding lead passes through an opening in a barrier, or enclosure, the opening shall be smoothly rounded or shall be provided with a secured and smoothly rounded bushing.

NEMA Standard 1-11-1983.

4.6.2 Welding Terminals

Terminals of the power source provided for the connection of welding leads shall be constructed to withstand an external pull, exerted for 1 minute from any direction, as specified in Table 4-3, without reducing the electrical spacings below those specified in Table 4-5 or without permanently deforming the terminals or adjacent parts. However, the pull applied to the welding terminals need not be more than that specified for the flexible cord used for the power supply connection. In the case of a jack plug, the plug can pull free of its jack with the application of a lesser pull.

Threaded connections used for the connection of welding leads shall withstand a torque as given by the following equation without reducing internal spacings below those given in Table 4-5 or without permanently deforming the terminals or adjacent parts:

$$T = 100 \times D^2 \text{ (customary units)}$$

$$T = 0.0175 \times D^2 \text{ (SI units)}$$

Where:
T = Torque in lb.-ft. (n.m).
D = Thread major diameter in inches (mm).

Copyright National Electrical Manufacturers Association
Provided by IHS under license with NEMA
No reproduction or networking permitted without license from IHS
Not for Resale

The welding terminals shall not exceed 60°C temperature rise when the power source is operated at rated-load current and duty cycle. When temperature testing, the welding leads connected to the welding terminals shall be in accordance with 4.6.1. Threaded connections used to hold the welding leads shall be tightened to a minimum torque as given in the following equation:

$$T = 60 \times D^2 \text{ (customary units)}$$

$$T = 0.0175 \times D^2 \text{ (SI units)}$$

NEMA Standard 1-11-1983.

4.7 INTERNAL WIRING REQUIREMENTS

4.7.1 Insulated Conductors

When internal wiring consists of insulated conductors, they shall be selected for the particular application with respect to the temperature, current, voltage, exposure to oil or grease, and other conditions of service to which they are likely to be subjected.

The wiring shall be so arranged or protected that no damage to the conductor insulation will occur from contact with any rough, sharp, or moving part.

All joints and connections shall be mechanically secured and shall provide electrical contact without mechanical strain on the conductor.

NEMA Standard 1-11-1983.

4.7.2 Uninsulated Conductors

When uninsulated conductors are used within an enclosure, they shall be so supported that the spacings given in Table 4-5 shall be maintained.

NEMA Standard 1-11-1983.

4.7.3 Insulating of Live Parts

Insulating washers, bushings, sheets, and such for the mounting of or insulation of live parts shall not be functionally damaged by the temperature to which they will be subjected during operation at rated load under usual service conditions.

NEMA Standard 1-11-1983.

4.8 SPACINGS

The minimum spacing between any uninsulated live part and another live, grounded, or isolated conductive part shall not be less than those shown in Table 4-5.

NEMA Standard 1-11-1983.

4.9 CLASSIFICATION OF INSULATION SYSTEMS

An insulation system is an assembly of insulating materials in association with the conductors and the supporting structural parts of an arc welding power source. Insulation systems are divided into classes according to the thermal endurance of the system for temperature rating purposes.

Insulation systems shall be classified as Class 105, Class 130, Class 155, Class 180, Class 200, or Class 220. Each insulation system is one that by experience or accepted test can be shown to have suitable thermal endurance when operating at the limiting temperature specified in temperature rise Tables 5-7 and 5-8.

The term "experience," as used in this paragraph, means successful operation for a long time under actual operating conditions of power sources designed with a temperature rise at or near the temperature rating limit.

The term "accepted test," as used in this paragraph, means a test on a system or model system that simulates the electrical, thermal, and mechanical stresses occurring in service.

Where appropriate to the construction, tests shall be made in accordance with the following applicable IEEE Test Procedures:

1. *Standard Test Procedure For Evaluation of Systems of Insulating Materials for Random-wound AC Electric Machinery,* IEEE Publication No. 117.
2. *Test Procedure Evaluation and Classification of Insulation System for DC Machines,* IEEE Publication No. 304.

For other constructions for which tests have not been standardized, similar procedures shall be permitted to be used if it is shown that they properly discriminate between service proven systems known to be different.

When evaluated by an accepted test, a new or modified insulation system shall be compared to an insulation system on which there has been substantial service experience.

If a comparison is made on a system of the same class, the new system shall have equal or longer thermal endurance under the same test conditions; if the comparison is made with a system of a lower temperature class, it shall have equal or longer thermal endurance at an appropriately higher temperature. When comparing systems of different classes, an appropriately higher temperature shall be considered to be 25°C per class higher than the temperature for the base insulation system class.

NEMA Standard 1-11-1983.

4.10 REQUIREMENTS FOR SPECIFIC COMPONENTS

4.10.1 Transformers

A power source transformer supplying welding current shall have the secondary winding(s) electrically isolated from the primary winding(s) when the power source is designed to be operated from power supply lines.

NEMA Standard 1-11-1983.

Copyright National Electrical Manufacturers Association
Provided by IHS under license with NEMA
No reproduction or networking permitted without license from IHS
Not for Resale

4.10.2 Capacitors

A capacitor, provided as part of a power source and connected across the power supply lines or a winding of the transformer providing welding current, shall be: (a) housed within the power source enclosure, or (b) housed in an enclosure or container that meets all of the applicable provisions of this standard. If a capacitor contains an insulating liquid, its container shall not leak under usual service conditions. If the liquid is flammable, the quantity shall be limited to 1 quart and the capacitor shall be protected against rupture of its container.

A capacitor shall be provided with automatic discharging means capable of reducing the potential across the capacitor to 50 volts within the time necessary to gain access to any current carrying part not in the output circuit of the machine after disconnecting the machine. If the potential across the capacitor exists at the blade of a disconnected attachment plug, the time of access is considered to be 2 seconds.

NEMA Standard 1-11-1983.

4.10.3 Switches and Control Devices

A switch, contactor, controller, or circuit breaker used to energize the power source shall perform satisfactorily for 6000 cycles of operation at a rate of 6 cycles per minute with the device making and breaking the input current(s) at rated input voltages of the power source when operated at rated load current. If such a device is known by prior testing or documentation to be suitable for the application, it need not be retested. Opening of the primary supply interrupting device employed in an arc welding power source shall disconnect all ungrounded supply conductors. Means shall be provided to indicate if this interrupting device has been turned on or off.

Exception: Control transformers having isolated windings that provide operating voltage for the primary supply interrupting device are not covered by this paragraph.

NEMA Standard 1-11-1983.

4.10.4 Operating Controls

A suitable means shall be provided for adjusting the output of an arc welding power source over the welding range specified by the manufacturer. Provision shall be made for indicating the approximate output setting(s) of the power source expressed as load voltage, load current, or by an arbitrary reference scale.

NEMA Standard 1-11-1983.

4.10.5 Marking of Connections and Operating Controls

All welding terminal connections, tap connections, and operating controls shall be plainly and permanently marked to designate their purpose and correct usage.

NEMA Standard 1-11-1983.

4.11 OUTPUT REGULATING TAPS

When load voltage or load current regulating tap switches are provided, they shall have established contact positions. Switches, brushes, or sliding type contacts shall not, if left between two contact positions, short circuit any winding turns unless tests show that such short circuiting will not cause temperature rises exceeding those specified in 5.9.

When load voltage or load current regulating taps involve the use of jack plugs and jacks, or equivalent means, external to the enclosure, the voltages at these locations shall not exceed those for welding terminals given in 5.3. Any flexible conductor used shall be suitable for welding service. Whatever means provided shall conform to the requirements of 3.1 regarding recessing or protection.

NEMA Standard 1-11-1983.

4.12 AUXILIARY POWER SUPPLY

4.12.1 Receptacles

A supply receptacle intended for providing power to 115 or 230 volt auxiliary equipment such as wire feeders, drills, grinders, and such, shall be of the grounding type, and the grounding contact of the receptacle shall be electrically connected to the enclosure of the power source. The current and voltage rating of the auxiliary power supply shall be marked at the receptacle location.

NEMA Standard 1-11-1983.

4.12.2 Protection

When supplied, a fuse(s) or circuit breaker(s) that protects the auxiliary power supply circuit shall be capable of interrupting the auxiliary power supply circuit. The current rating of a fuse shall be marked at the fuseholder location.

NEMA Standard 1-11-1983.

4.12.3 Auxiliary Power Supply Circuit

An auxiliary power supply circuit shall be electrically isolated from the input power supply.

NEMA Standard 1-11-1983.

4.13 SHORT CIRCUIT OF WELDING CIRCUIT

An arc welding power source shall not become a fire or shock hazard as a result of a short circuit of the welding circuit.

NEMA Standard 1-11-1983.

Copyright National Electrical Manufacturers Association
Provided by IHS under license with NEMA
No reproduction or networking permitted without license from IHS
Not for Resale

Protection of the power source against short circuit current may be accomplished by means of the branch circuit protection, provided at the time of installation, in accordance with Article 630 of the *1987 National Electrical Code,* official local codes and the manufacturer's recommendations.

Authorized Engineering Information 1-11-1983.

Copyright National Electrical Manufacturers Association
Provided by IHS under license with NEMA
No reproduction or networking permitted without license from IHS
Not for Resale

Section 5
RATING AND PERFORMANCE

5.1 INPUT RATING OF ARC WELDING POWER SOURCES OPERATING FROM ELECTRICAL POWER SUPPLIES

The preferred input voltages and frequencies shall be one or more of the following:

60 Hertz: 200, 230, 460 and 575 volts.

50 Hertz: 220, 380, and 415 volts.

The input current(s) of an arc welding power source operating from an electrical power supply shall be determined at the rated output when rated input voltage(s) and rated frequency(s) are applied.

For power sources with regulating taps, the input current(s) shall be determined under the conditions which result in the maximum input current when the output is the rated load current at the rated load voltage of the power source.

The actual input current(s) determined shall not vary from the input current(s) shown on the name plate by more than 10 percent for NEMA Class I and NEMA Class II power sources and 25 percent for NEMA Class III power sources.

NEMA Standard 1-11-1983.

5.2 POWER FACTOR CORRECTION

When power factor correction is provided, the corrected value shall be measured at rated load, rated input voltage(s) and frequency(s). The corrected value shall not be less than 75 percent unless the corrected value is specified on the nameplate.

NEMA Standard 11-17-1988.

5.3 OPEN CIRCUIT VOLTAGE

The open circuit voltage, excluding high frequency stabilization voltage, of an arc welding power source, using a voltmeter within the range of 100 ohms/volt and 1,000 ohms/volt, shall not exceed the following when rated input voltage is applied or when a generator type arc welding power source is operated at maximum rated no load speed:

5.3.1 Manual and Semiautomatic Arc Welding Power Sources

1. AC arc welding power source	80 volts rms*
2. DC arc welding power source with more than 10 percent ripple voltage (see 1.2)	80 volts rms
3. DC arc welding power source with 10 percent or less ripple voltage	100 volts average

*Because of the high ripple content, the average value reading may be in error, therefore, the rms value is used.

5.3.2 Automatic Arc Welding Power Sources

1. AC arc welding power source	100 volts rms
2. DC arc welding power source with more than 10 percent ripple voltage	100 volts rms*
3. DC arc welding power source with 10 percent or less ripple voltage	100 volts average

NEMA Standard 11-17-1988.

5.4 OUTPUT RATINGS OF CONSTANT CURRENT NEMA CLASS I ARC WELDING POWER SOURCES

5.4.1 General

Constant current (see 1.2) NEMA Class I arc welding power sources having a duty cycle rating of 60, 80, or 100 percent shall have an output rating in load amperes and load volts in accordance with Column 1 of Tables 5-1 or 5-2. They shall be capable of providing the load amperes at the load volts for the minimum and maximum output settings associated with the rated load amperes and rated load volts given in Column 1 of Tables 5-1 and 5-2, see 5.4.2 and 5.4.3, when:

1. The welding terminals are connected to a resistance load having a power factor of 0.99 or higher.
2. A generator type power source is operated at rated load speed.
3. Rated input voltage at rated frequency is applied to the power source.
4. The temperature rise specified in 5.9 is not exceeded.

For an arc welding power source having dc output, the load amperes and load volts shall be expressed as average values. For an arc welding power source having an ac output, the load amperes and load volts shall be expressed as rms values.

NEMA Standard 1-11-1983.

5.4.2 AC or DC Arc Welding Power Sources

When the power source is operating at the maximum output setting shown in Column 3 of Table 5-1, the duty cycle shall not be less than one half the rated duty cycle of the power source.

NEMA Standard 1-11-1983.

Copyright National Electrical Manufacturers Association
Provided by IHS under license with NEMA
No reproduction or networking permitted without license from IHS
Not for Resale

Table 5-1
CONSTANT CURRENT, AC OR DC NEMA CLASS I ARC WELDING POWER SOURCES

Column 1		Column 2		Column 3	
Rated Output[a]		Minimum Output Setting[b]		Maximum Output Setting [c]	
Load Amperes at	Load Volts[d]	Load Amperes at	Load Volts[d]	Load Amperes at	Load Volts[d]
200	28	40	22	250	30
250	30	50	22	312	32
300	32	60	22	375	35
400	36	80	23	50	40
500	40	100	24	625	44
600	44	120	25	750	44
800	44	160	26	1000	44
1000	44	200	28	1250	44
1200	44	240	30	1500	44
1500	44	300	32	1875	44

Table 5-2
CONSTANT CURRENT, AC/DC NEMA CLASS I ARC WELDING POWER SOURCES

Column 1		Column 2		Column 3			
Rated Output(a)		Minimum Output Setting(b)		Maximum Output Setting(c)			
AC/DC		AC/DC		AC		DC	
Load Amperes at	Load Volts[d]	Load Amperes at	Load Volts[d]	Load Amperes at	Load Volts[d]	Load Amperes at	Load Volts[d]
200	28	40	22	250	30	200	28
250	30	50	22	312	32	250	30
300	32	60	22	375	35	300	32
400	36	80	23	500	40	400	36
500	40	100	24	625	44	500	40
600	44	120	25	750	44	600	44
800	44	160	26	1000	44	800	44
1000	44	200	28	1250	44	1000	44
1200	44	240	30	1500	44	1200	44
1500	44	300	32	1875	44	1500	44

[a] These tables list the preferred values of load ampere ratings. Other rated-load currents shall be permitted to be used as follows: For less than 250 amperes, the load current may be in steps of 25 amperes; for more than 250 amperes, the load current may be in steps of 50 amperes. In such cases, the values for the minimum output current shall be 20 percent of rated load current amperes and for maximum output shall be 125 percent of rated load amperes except that for power sources covered by Table 5-2, the DC maximum output current shall be 100 percent of rated load amperes. The load volts in each case shall be determined by the equation in note (d).

[b] Load amperes or load volts, or both, shall be permitted to be less than, but they shall not be more than, the values listed in the table.

[c] Load amperes or load volts, or both, shall be permitted to be more than, but they shall not be less than, the values listed in the table.

[d] These load voltages are based upon the equation $E = 20 + 0.04I$, where E is the load voltage and I is the load amperes. For load current larger than 600 amperes, the load voltage is 44 volts.

Copyright National Electrical Manufacturers Association
Provided by IHS under license with NEMA
No reproduction or networking permitted without license from IHS
Not for Resale

Table 5-3
CONSTANT CURRENT, AC OR DC NEMA CLASS II ARC WELDING POWER SOURCES

Column 1		Column 2		Column 3	
Rated Output[a]		Minimum Output Setting[b]		Maximum Output Setting [c]	
Load Amperes at	Load Volts[d]	Load Amperes at	Load Volts[d]	Load Amperes at	Load Volts[d]
150	26	30	21	165	27
175	27	35	21	193	28
200	28	40	22	220	29
225	29	45	22	248	30
250	30	50	22	275	31
300	32	60	22	330	33
350	34	70	23	385	36

5.4.3 AC/DC Arc Welding Power Sources

When the power source is operating at the maximum output setting shown in column 3 of Table 5-2, the duty cycle for the dc output shall be the rated duty cycle of the power source and the duty cycle for the ac output shall not be less than one half the rated duty cycle of the power source.

NEMA Standard 1-11-1983.

5.5 OUTPUT RATINGS OF CONSTANT CURRENT NEMA CLASS II ARC WELDING POWER SOURCES

5.5.1 General

Constant current (See 1.2) NEMA Class II arc welding power sources having a duty cycle rating of 30, 40, or 50 percent shall have an output rating in load amperes and load volts in accordance with Column 1 of Tables 5-3 or 5-4. They shall be capable of providing the load amperes at the load volts for the minimum and maximum output settings associated with the rated load amperes and load volts given in Column 1 of Tables 5-3 or 5-4. See notes B and C of Table 5-4 when:

1. The welding terminals are connected to a resistance load having a power factor of 0.99 or higher;
2. A generator type power source is operated at rated load speed;
3. Rated input voltage at rated frequency is applied to the power source; and
4. The temperature rise specified in 5.9 is not exceeded.

For an arc welding power source having a dc output, the load amperes and load volts shall be expressed as average values. For an arc welding power source having an ac output, the load amperes and load volts shall be expressed as rms values.

5.5.2 AC or DC Arc Welding Power Sources

When the power source is operating at the maximum output setting shown in Column 3 of Table 5-3, the duty cycle shall be not less than one half the rated duty cycle of the power source.

5.5.3 AC/DC Arc Welding Power Sources

When the power source is operating at the maximum output setting shown in Column 3 of Table 5-4, the duty cycle for the dc output shall be the rated duty cycle of the power source and the duty cycle for the ac output shall be not less than one half the rated duty cycle of the power source.

NEMA Standard 1-11-1983.

5.6 OUTPUT RATINGS OF CONSTANT CURRENT NEMA CLASS III ARC WELDING POWER SOURCES

Constant current (see 1.2) NEMA Class III arc welding power sources having a duty cycle rating of 20 percent shall have an output rating in load amperes and load volts in accordance with Column 1 of Table 5-5. They shall be capable of providing the amperes at the minimum and maximum output settings associated with the rated load amperes and rated load volts given in Column 1 of Table 5-5 when:

1. The welding terminals are connected to a resistance load having a power factor of 0.99 or higher;
2. A generator type power source is operated at rated load speed;
3. Rated input voltage at rated frequency is applied to the power source; and
4. The temperature rise in 5.9 is not exceeded.

For an arc welding power source having a dc output, the load amperes and load volts shall be expressed as average values. For an arc welding power source having

Copyright National Electrical Manufacturers Association
Provided by IHS under license with NEMA
No reproduction or networking permitted without license from IHS
Not for Resale

Table 5-4
CONSTANT CURRENT, AC/DC NEMA CLASS II ARC WELDING POWER SOURCES

Column 1		Column 2		Column 3			
Rated Output(a)		Minimum Output Setting(b)		Maximum Output Setting(c)			
AC/DC		AC/DC		AC		DC	
Load Amperes at	Load Volts[d]	Load Amperes at	Load Volts[d]	Load Amperes at	Load Volts[d]	Load Amperes at	Load Volts[d]
150	26	30	21	165	27	150	26
175	27	35	21	193	28	175	27
200	28	40	22	220	29	200	28
225	29	45	22	248	30	225	29
250	30	50	22	275	31	250	30
300	32	60	22	330	33	300	32
350	34	70	23	385	36	350	34

[a]These tables list the preferred values of load ampere ratings. Other rated load currents shall be permitted to be used as follows: For less than 150 amperes, the load current may be in steps of 25 amperes; for more than 350 amperes, the load current may be in steps of 50 amperes. In such cases, the values for the minimum output current shall be 20% of rated load amperes and for Maximum output shall be 110% of rated load amperes except that for power sources covered by Table 5-4, the dc maximum output current shall be 100% of rated load amperes. The load volts in each case shall be determined by the equation in the above asterisk note.

[b]Load amperes or load volts, or both, shall be permitted to be less than but they shall not be more than the values listed in the table.

[c]Load amperes or load volts, or both, shall be permitted to be more than but they shall not be less than the values listed in the table.

[d]These load voltages are based upon the equation $E = 20 + 0.04I$, where E is the load voltage and I is the load amperes.

Table 5-5
CONSTANT CURRENT, NEMA CLASS III ARC WELDING POWER SOURCES

Column 1		Column 2		Column 3
Rated Output[c]		Minimum Output Setting[d]		Maximum Output Setting[c]
Load Amperes at	Load Volts	Load Amperes at	Load Volts	
180 through 230[a]	25	Multiply rated load amperes by 1/6[b]	20	Same as rated output given in Column 1
235 through 295[a]	30	Multiply rated load amperes by 1/6[b]	22	Same as rated output given in Column 1

[a] Expressed in multiples of 5.

[b] If the number is not a multiple of 5, raise the number to the next multiple of 5.

[c] The measured load amperes at rated load volts shall be not less than 95 percent of the rated load amperes shown on the nameplate.

[d] Load amperes, load volts or both, shall be permitted to be less than, but they shall not be more than, the values listed in the table.

Copyright National Electrical Manufacturers Association
Provided by IHS under license with NEMA
No reproduction or networking permitted without license from IHS
Not for Resale

an ac output, the load amperes and load volts shall be expressed as rms values.

For arc welding power sources having an ac output only or a dc output only, the values given in Table 5-5 apply. For arc welding power sources having an ac/dc output, the values given in Table 5-5 apply for the ac output; the dc output shall be not less than 80 percent of the ac output set forth in Column 1 of Table 5-5, while the values in Column 2 of Table 5-5 apply directly to the dc output.

NEMA Standard 1-11-1983.

5.7 OUTPUT RATINGS OF CONSTANT VOLTAGE, NEMA CLASS I ARC WELDING POWER SOURCES

Constant voltage (see 1.2) NEMA Class I (see 1.2) arc welding power sources having a duty cycle rating of 60, 80, or 100 percent shall have an output rating in load amperes and load volts in accordance with Table 5-6 when:

1. The welding terminals are connected to a resistance load having a power factor of 0.99 or higher;
2. A generator type power source is operated at rated load speed;
3. Rated-input voltage at rated frequency is applied to the power source;
4. The temperature rise in 5.9 is not exceeded.

For an arc welding power source having a dc output, the load amperes and load volts shall be expressed as average values. For an arc welding power source having an ac output, the load amperes and load volts shall be expressed as rms values.

NEMA Standard 1-11-1983.

5.8 NO LOAD OPERATION

Arc welding power sources shall be capable of operating continuously at no load at any output setting without exceeding the temperature rises specified in 5.9.

NEMA Standard 1-11-1983.

5.9 TEMPERATURE RISE

When an arc welding power source, is operated at rated load speed or with rated input voltage at rated frequency applied, is connected to a resistance load (0.99 power factor or higher), and is operated:

Table 5-6
CONSTANT VOLTAGE, AC OR DC NEMA CLASS I ARC WELDING POWER SOURCES

Column 1		Column 2	
Rated Output [a][b]		Minimum Output Setting [c][d]	
Load Amperes at	Load Volts[e]	Load Amperes at	Load Volts[f]
200	28	50	14
250	30	62	15
300	32	75	15
400	36	100	16
500	40	125	17
600	44	180	19
800	44	240	22
1000	44	300	24
1200	44	360	24
1500	44	450	24

[a] Maximum amperes, maximum load volts, or both, shall be permitted to be more than the values listed in the table.

[b] This table lists the preferred values of load ampere ratings. Other rated load currents shall be permitted to be used as follows: for less than 500 amperes, the load current shall be permitted to be in steps of 25 amperes; for more than 500 amperes, the load current shall be permitted to be in steps of 50 amperes. For load volts see note (e). For minimum load current and voltage see note (d).

[c] Load amperes, load volts, or both, shall be permitted to be less than, but they shall not be more than, the values listed in the table.

[d] For the load currents described in note (b), the minimum output current shall be 25 percent of the rated load current for power sources rated 550 amperes and less and 30 percent of rated load current for power sources rated more than 550 amperes. For minimum load volts, see note (f).

[e] Load voltages are based upon the equation $E = 20 + 0.04I$ where E is the load voltage and I is the load current, but in no case shall exceed 44 volts.

(f) Load voltages are based upon the equation $E = 20 + 0.04I$ where E is the load voltage and I is the load current, but in no case shall exceed 24 volts.

Copyright National Electrical Manufacturers Association
Provided by IHS under license with NEMA
No reproduction or networking permitted without license from IHS
Not for Resale

a. At rated load current(s) and load voltage(s) (See 6.1) at rated duty cycle and;
b. At the maximum output setting(s) at the specified duty cycle until constant temperatures are attained, the temperature rise of the various parts shall not exceed the values given in Tables 5-7 and 5-8. Auxiliary power supplies intended to be used while welding shall be loaded to their rating.

In the case of power sources with output regulating taps in either the input circuit, the output circuit, or both, the temperature shall be measured with tap selections that will produce the highest temperatures at rated output or below.

NEMA Standard 1-11-1983.

5.10 NAMEPLATE MARKING

The following minimum information, where applicable, shall be given on the nameplate(s) of an arc welding power source.

1. Manufacturer's type designation and/or identification number;
2. "NEMA EW 1";
3. Maximum open circuit voltage (see 5.3);
   When a power source has an open circuit voltage in accordance with 5.3.2, a cautionary statement shall be provided indicating that the power source is not intended for manual or semiautomatic arc welding.
4. Rated load volts;
5. Rated load amperes;
6. Duty cycle at rated load;
7. Maximum rated speed of generator in rpm at no load;
8. Rated frequency(s) of power supply;
9. Number of phases of power supply;
10. Rated input voltage(s) of power supply;

Table 5-7
MAXIMUM TEMPERATURE RISE FOR DC GENERATOR, AC GENERATOR-RECTIFIER AND AC GENERATOR ARC WELDING POWER SOURCES

	Temperature Rise							
	DC Prime Mover Motors, DC Generators and Exciters				AC Generators, AC Generator-Rectifiers and Prime Mover Motors			
	Class of Insulation Systems				Class of Insulation Systems			
	105	130	155	180	105	130	155	180
1. Armature windings, multilayer field windings, and all windings other than those covered in item 2[a]								
By thermometer method[b]	50°C	70°C	90°C	110°C	–	–	–	–
By resistance method	60°C	85°C	110°C	135°C	60°C	85°C	110°C	135°C
2. Single layer windings consisting of exposed uninsulated or film-coated conductors[a]								
By thermometer method[b]	60°C	85°C	105°C	130°C	–	–	–	–
By resistance method	65°C	90°C	115°C	140°C	–	–	–	–
3. Cores and mechanical parts in contact or adjacent to insulation – by thermometer method[b]	50°C	70°C	90°C	110°C	50°C	70°C	90°C	110°C
4. Commutators – by thermometer method[b]	65°C	85°C	85°C	85°C	–	–	–	–
5. All parts other than those whose temperatures affect the temperature of the insulating material shall be permitted to attain such temperatures as will not injure the power source of its component parts in any respect.								
6. Squirrel cage rotors shall not attain such temperatures as will cause mechanical injury to the power source.								
7. For the temperatures of welding leads and welding terminals, see 4.6.								

[a] Where two methods of temperature measurement are listed, a temperature rise within the values listed in Table 5-7, measured by either method, demonstrates conformity with this standard.

[b] A thermocouple shall be permitted to be substituted for a thermometer where applicable. For test procedures, see Section 6. For the description of classes of insulation systems, see 4.9.

Copyright National Electrical Manufacturers Association
Provided by IHS under license with NEMA
No reproduction or networking permitted without license from IHS
Not for Resale

11. RMS value(s) of the input current(s) amperes at rated load output (see 5.1);
12. Prime mover speed in rpm at no load if different from 5.10.7; and,
13. Power factor value as required in 5.2.

NEMA Standard 11-17-1988.

Table 5-8
MAXIMUM TEMPERATURE RISE FOR AC TRANSFORMER, DC TRANSFORMER-RECTIFIER AND AC OR DC TRANSFORMER-RECTIFIER ARC WELDING POWER SOURCES

Method of Temperature Determination[a]	Temperature Rise					
	Class of Insulation System					
	105	130	155	180	200	220
Resistance	70°C	90°C	115°C	135°C	155°C	170°C
Applied Thermocouple	80°C	100°C	125°C	150°C	170°C	190°C

Metallic parts in contact with any kind of insulation shall not attain a temperature in excess of that allowed for the adjacent insulation.

For the temperatures of welding leads and welding terminals, see 4.6.

All parts other than those whose temperatures affect the temperature of the insulating material shall be permitted to attain such temperatures as will not injure the power source, or its component parts, in any respect.

[a] A temperature rise within the values listed in Table 5-8, measured by either method, demonstrates conformity with this standard. For coils, transformer windings, and reactors, the resistance method of temperature determination is preferred.

For the description of classes of insulation systems, see 4.9.

For test procedures, see Section 6.

Copyright National Electrical Manufacturers Association
Provided by IHS under license with NEMA
No reproduction or networking permitted without license from IHS
Not for Resale

Section 6
TEMPERATURE TESTS

6.1 TESTING PROCEDURES FOR ARC WELDING POWER SOURCES

When power sources are tested for temperature rise in accordance with 5.9, the load current and load voltage shall be simultaneously maintained except that in the case of NEMA Class III power sources, the load voltage need not be maintained. The load voltage shall be measured at the welding terminals of the arc welding power source.

For arc welding sources having a duty cycle rating less than 100 percent, the test shall be conducted by starting and stopping the welding circuit in the manner in which the power source is designed to be used. All temperatures shall be measured at the end of the load time of the last cycle after constant temperatures are attained.

NEMA Standard 11-17-1988.

6.2 THERMOMETER METHOD OF TEMPERATURE DETERMINATION

6.2.1 Definition

The thermometer method consists of determining temperature by mercury or spirit thermometers or other suitable temperature measuring instruments* that shall be applied to the hottest parts accessible to ordinary mercury thermometers without alteration of the structure.

NEMA Standard 1-11-1983.

*When the thermometer method of temperature determination is called for, it is intended that the temperature measuring instrument used shall indicate substantially the same temperature as would be obtained by a liquid in glass thermometer in the same location.

6.2.2 Measurement

When temperature measurements of motor generator and engine generator arc welding power sources are made by the thermometer method, the tests shall be made, except as indicated in 6.1, 6.8, and 6.9, in accordance with the latest revision of the following applicable test codes:

1. *Test Procedure for Polyphase Induction Motors and Generators,* IEEE Publication No. 112.
2. *Guide on Test Procedures for DC Machines,* IEEE Publication No. 113.

NEMA Standard 11-17-1988.

6.3 RESISTANCE METHOD OF TEMPERATURE DETERMINATION

6.3.1 Definition

The resistance method consists of determining temperature by comparison of the resistance of a winding at the temperature to be determined with the resistance at a known temperature.

NEMA Standard 1-11-1983.

6.3.2 Measurement

When temperature measurements of arc welding power sources are made by the resistance method, the tests shall be made, except as indicated in 6.1, 6.8, and 6.9, in accordance with the following applicable test codes:

1. *Test Procedure for Polyphase Induction Motors and Generators,* IEEE Publication No. 112.
2. *Distribution Power, and Regulating Transformers, Test Code for Liquid Immersed,* ANSI/IEEE Publication No. C57.12.90.

6.3.3 Determination of Average Measured Temperature by the Resistance Method

The average measured temperature of either a copper or aluminum winding shall be determined by the following equation:

$$t_h = \frac{R_h}{R_c}(K + t_c) - K$$

Where:
t_h = temperature of winding in degrees celsius when R_h was measured
t_c = temperature of winding in degrees celsius when R_c was measured
R_h = hot resistance, ohms
R_c = cold resistance, ohms
K = for copper = 234.5
for aluminum = 225

NEMA Standard 1-11-1983.

6.4 APPLIED THERMOCOUPLE METHOD OF TEMPERATURE DETERMINATION

6.4.1 Definition

The applied thermocouple method consists of determining temperature by thermocouples or other suitable temperature measuring instruments of comparable size applied to the hottest parts accessible to thermocouples in locations that are normally inaccessible to liquid in glass thermometers.

NEMA Standard 1-11-1983.

Depending upon the thickness of the insulation separating them from current carrying conductors, thermocouples may give readings comparable to those obtained by the resistance method or may give the considerably lower readings characteristic of the ther-

Copyright National Electrical Manufacturers Association
Provided by IHS under license with NEMA
No reproduction or networking permitted without license from IHS
Not for Resale

mometer method. Accordingly, in the measurement of winding temperatures by the use of thermocouples, the method will be defined as the "applied thermocouple method" only if the thermocouples are applied directly to the conductors or are separated from the metallic circuit only by the integrally applied insulation of the conductor itself.

Authorized Engineering Information 1-11-1983.

6.4.2 Measurement

When temperature measurements of arc welding power sources are made by the applied thermocouple method, the tests shall be made, except as indicated in 6.1, 6.8, and 6.9, in accordance with ANSI/IEEE Publication No. C57.12.90.

NEMA Standard 1-11-1983.

6.5 DETERMINATION OF AMBIENT TEMPERATURE

When temperature measurements are made, the ambient temperature shall be determined by at least three thermocouples, or thermometers, spaced uniformly around the arc welding power source under test. They shall be located at approximately one half the height of the power source and at a distance of 3 to 6 feet (1 to 2 meters) from the power source and shall be protected from drafts and abnormal heating.

NEMA Standard 1-11-1983.

6.6 COOLING AIR TEMPERATURE DURING TESTS

Temperature tests shall be made at any cooling air temperature, preferably not below 10°C. It shall be assumed that the temperature rise is the same for all cooling air temperatures between the limits of 10°C and 40°C.

NEMA Standard 1-11-1983.

6.7 OMISSION OF TEMPERATURE TEST ON DUPLICATE APPARATUS

A temperature test shall not be required when a record of test made on a duplicate unit in accordance with these standards can be furnished.

NEMA Standard 2-3-1936.

6.8 CORRECTION OF TEMPERATURE TO TIME OF SHUTDOWN

Whenever a sufficient time has elapsed between the instant of shutdown and the time of final temperature measurement to permit the temperature to fall, suitable corrections shall be applied so as to obtain as nearly as practicable the temperature at the instant of shutdown. One acceptable method to determine approximate temperature at the instant of shutdown is by plotting a curve, with temperature readings as ordinate and time as abscissa, and extrapolating back to the instant of shutdown.

In cases where successive measurements show increasing temperatures after shutdown, the highest value shall be taken.

NEMA Standard 1-11-83.

6.9 STOPPING GENERATOR-TYPE POWER SOURCES FOR TEMPERATURE TESTS

Precautions shall be taken to shorten the stopping period of generator-type arc welding power sources and to maintain the temperature during the stopping period. It is recommended that means be used to limit the stopping and measuring period to a value not exceeding that specified for the given rating as follows: (This sentence has been approved as Authorized Engineering Information.)

Up to and including 50 kilowatts—3 minutes

Above 50 kilowatts and including 200 kilowatts—5 minutes

NEMA Standard 11-17-1988.

Copyright National Electrical Manufacturers Association
Provided by IHS under license with NEMA
No reproduction or networking permitted without license from IHS
Not for Resale

Section 7
HIGH POTENTIAL TESTS

7.1 HIGH POTENTIAL TESTS

At the time of manufacture, each new and completely assembled arc welding power source shall be capable of passing the high potential test described in this Section.

NEMA Standard 1-11-1983.

7.2 TEST VOLTAGE

The ac rms test voltage for all arc welding power sources shall be 1000 volts plus twice the rated voltage of the circuit under test except for the alternative voltages specified for production line testing in 7.7. The frequency of all test voltages shall be 50 to 60 hertz, and the wave shape shall be essentially sinusoidal.

Repeated application of the high potential test voltage is not recommended. (This sentence is approved as Authorized Engineering Information.) If it becomes necessary to subject the arc welding power source to a subsequent high potential test, the test voltage shall be 85 percent of the appropriate test voltage applicable to the circuit under test.

NEMA Standard 1-11-1983.

7.3 DURATION OF APPLICATION OF TEST VOLTAGE

The test voltage for arc welding power sources shall be applied continuously for a period of 1 minute except for the alternative time periods specified for production line testing.

NEMA Standard 1-11-1983.

7.4 POINTS OF APPLICATION OF TEST VOLTAGE

Except for the production line testing specified in 7.7.2, the test voltage shall be successively applied between the input circuit of the arc welding power source and the metal frame and case; between the output circuit and the metal frame and case; and between other circuits such as control or auxiliary circuits and the metallic frame and case. All windings and circuits not under test and the core and other noncurrent carrying parts shall be connected to the metallic frame and case. Any electrical circuit that is isolated from the high potential test voltage by a switch, relay, or contactor shall be tested separately, or the switch, relay, or contactor shall be closed.

Alternatively, all circuits shall be tested by successively applying the test voltage directly between any two circuits and between any circuit and the metallic frame and case.

For purposes of high potential testing, an electric circuit consists of all windings and other live parts that are conductively connected to each power input terminal, to each output terminal of the welding power source, or to each terminal of any auxiliary or control receptacle or terminal. See 7.6.

NEMA Standard 1-11-1983.

7.5 TEMPERATURE AT WHICH HIGH POTENTIAL TESTS ARE TO BE MADE

High potential tests shall be made at room temperature or at any higher temperature attained during testing up to rated load operating temperature of the arc welding power source.

NEMA Standard 1-11-1983.

7.6 HIGH POTENTIAL TEST PROCEDURE FOR COMPONENTS AND ACCESSORIES

Except for the production line testing specified in 7.7.2, devices that do not fall within the scope of this publication but for which there are standards for high potential tests, such as meters, rectifiers, capacitors, lamp holders, switches, fractional horsepower motors, electronic equipment, ground detectors, etc., and that require lower test voltages than those called for in this publication, shall be grounded, short circuited or disconnected before the high potential tests are made on the arc welding power source.

NEMA Standard 1-11-1983.

7.7 PRODUCTION LINE HIGH POTENTIAL TESTING

One of the two tests specified in 7.7.1 and 7.7.2 shall be used in production line testing as an alternative to the 1 minute high potential test specified in 7.2, 7.3, and 7.4.

7.7.1 Arc welding power sources for which the test voltage is 2,500 volts or less shall be tested in accordance with 7.2 through 7.6 except that the test voltage shall be 1.2 times the one minute test voltage and the test time reduced to one second.

7.7.2 For this alternative test all of the following tests shall be made:

1. Prior to final assembly in the power source, components such as transformers, reactors (including saturable), magnetic amplifiers, motors, rectifier assemblies, and any other devices that are intended to be electrically connected to the input power supply manufactured inhouse shall be tested in accordance with 7.2 and 7.3. Application of the test voltage to such a device shall be be-

Copyright National Electrical Manufacturers Association
Provided by IHS under license with NEMA
No reproduction or networking permitted without license from IHS
Not for Resale

tween its input connected parts and its metal frame or mounting bracket parts.

2. Internally connected circuits that are not accessible during usual operation need not be tested; however, if such circuits derive their power from transformers connected to the input power supply, these transformers shall be tested in accordance with 7.7.2.1.

3. The completely assembled power source shall be tested at 1000 volts for 1 minute or 1200 volts for 1 second in accordance with 7.2 through 7.5.

NEMA Standard 1-11-1983.

During the test, circuitry employing solid state components or other electronic circuits may be electrically bypassed or disconnected to minimize the likelihood of damage to these components.

Authorized Engineering Information 1-11-1983.

Copyright National Electrical Manufacturers Association
Provided by IHS under license with NEMA
No reproduction or networking permitted without license from IHS
Not for Resale

Section 8
EFFICIENCY AND POWER FACTOR

8.1 METHOD OF DETERMINING EFFICIENCY AND POWER FACTOR

8.1.1 Conditions for Test

1. *Input*

The efficiency and input power factor of an arc welding power source shall be determined at rated input voltage, at rated frequency, and at measured input current.

2. *Output*

Efficiency and input power factor shall be determined at rated output when the power source is connected to a resistance load having a power factor of 0.99 or higher.

3. *Temperature*

The efficiency and input power factor shall be measured just prior to the conclusion of the temperature test.

4. *Miscellaneous Losses*

The power consumed by resistors, reactors, stabilizers, ventilating blowers, field and control rheostats, and other components, including separately excited fields and control windings, performing an essential function in the operation of the arc welding power source and included as an integral part of the power source shall be included in the determination of the efficiency and input power factor.

NEMA Standard 1-11-1983.

8.1.2 Efficiency

The efficiency of an arc welding power source shall be determined from simultaneous measurements of input power and output power.

NEMA Standard 1-11-1983.

8.1.3 Input Power Factor

The input power factor of an arc welding power source shall be determined from simultaneous measurements of input current, rated input voltage, and watts. Alternatively, a power factor meter shall be used.

NEMA Standard 1-11-1983.

Copyright National Electrical Manufacturers Association
Provided by IHS under license with NEMA
No reproduction or networking permitted without license from IHS
Not for Resale

Section 9
POWER SOURCES TO BE USED WITH GAS TUNGSTEN ARC WELDING

9.1 GENERAL

Special consideration shall be given when an arc welding power source is rated for use with the gas tungsten, arc welding process.

The provisions of this section shall be in addition to and not in place of the provisions of Sections 1 through 8 and Section 10, except as noted herein.

NEMA Standard 9-15-1983.

9.2 DEFINITIONS

9.2.1 Gas Tungsten Arc Welding (GTAW)

An arc welding process that produces coalescence of metals by heating them with an arc between a tungsten (nonconsumable) electrode and the work. Shielding is obtained from a gas or gas mixture. Pressure may or may not be used and filler metal may or may not be used.

Authorized Engineering Information 9-15-1983.

9.2.2 Shielding Gas

Shielding gas is a protective gas used to prevent atmospheric contamination of the weld.

NEMA Standard 9-15-1983.

9.3 VOLT AMPERE RELATIONSHIP FOR GTAW

For the purposes of this section, the relationship between output voltage (E) and output current (I) shall be given by the equation:

$$E(GTAW) = 13 + 0.12I$$

NEMA Standard 9-15-1983.

The shielding gas used in GTAW is normally a pure inert gas. Argon is the predominant gas used. A characteristic of argon shielding gas is that argon produces arc voltages considerably lower than those shown in the tables of Section 5.

Authorized Engineering Information 9-15-1983.

9.4 CATEGORIES OF GTAW POWER SOURCES

9.4.1 GTAW power sources shall be categorized by one of the following:

a. DC
b. AC
c. AC/DC

NEMA Standard 9-15-1983.

In some cases, power sources conforming to these standards may be equipped to produce pulsed current output. When providing pulsed current output, the power source rating may be affected and the manufacturers recommendations should be consulted.

Authorized Engineering Information 9-15-1983.

9.4.2 DC Power Sources

The rating and performance for a GTAW dc power source shall be determined in accordance with Section 5. *EXCEPTION:* Control transformers having isolated windings that provide operating voltage for the primary supply interrupting device are not covered by this paragraph.

When the minimum load current, welding current ranges, and dial calibration currents are given for GTAW, the load current/load voltage relationship shall be in accordance with the equation given in 9.3.

NEMA Standard 11-17-1988.

9.4.3 AC Power Sources

The rating and performance for a GTAW ac power source shall be determined in accordance with EW1, Part 5 except as follows:

a. The maximum and rated output values that are specifically for GTAW values shall be determined in accordance with the equation given in 9.3.
b. The welding terminals are connected to a resistance load having power factor of 0.99 or higher. Additionally, the load shall have a partial rectifying characteristic such that when the electrode terminal is negative with respect to the work terminal, the half cycle voltage shall be 16 volts plus or minus 0.5 volts less than the voltage when the electrode terminal is positive.

NEMA Standard 9-15-1983.

One method of establishing the load characteristics is to pass dc current (of 10 percent or less ripple) through the load in both directions and at the amperage level at which the test is to be made. The dc voltage across the load is to be measured in both directions and is to have a difference of 16 ± 0.5 volts.

Authorized Engineering Information 9-15-1983.

When the minimum load current, welding current ranges, and dial calibration currents are given for GTAW, the load current/load voltage relationship shall be in accordance with the equation given in 9.3.

NEMA Standard 9-15-1983.

Difference in emission characteristics between the electrode and the work may cause a voltage unbalance to occur across the arc. The voltage required to cause electron flow from the electrode to the work is less than the voltage required to cause electron flow from the work to the electrode. Unless means are incorporated to prevent it, this unbalance of voltage will cause current unbalance called a dc component. The dc component

Copyright National Electrical Manufacturers Association
Provided by IHS under license with NEMA
No reproduction or networking permitted without license from IHS
Not for Resale

current may have an adverse effect on the operation and ratings of an ac arc welding power source.

AC GTAW should be carried out only on power sources specifically designed or recommended by the manufacturer for this purpose.

Authorized Engineering Information 9-15-1983.

9.4.4 AC/DC Power Sources

AC/DC GTAW power sources shall conform to 9.4.2 when furnishing dc to a load and 9.4.3 when furnishing ac to a load.

NEMA Standard 9-15-1983.

9.5 NAMEPLATE MARKING

Power sources specified for use on ac GTAW shall require nameplate markings of reduced duty cycle and output current rating in addition to those given in 5.10, unless the power source has the same output ratings as for dc GTAW. The appropriate additional nameplate markings shall be:

1. "GTAW (rated load amperes)"; or,
2. "GTAW (duty cycle at rated load)."

NEMA Standard 9-15-1983.

Copyright National Electrical Manufacturers Association
Provided by IHS under license with NEMA
No reproduction or networking permitted without license from IHS
Not for Resale

Section 10
ARC WELDING POWER SOURCES WITH HIGH FREQUENCY ARC STARTING AND/OR STABILIZING

10.1 GENERAL

The maximum open circuit voltage (OCV) given in 5.3 may not be sufficient for certain welding processes. A higher voltage may be required to maintain a stable arc, which is especially true for the ac GTAW welding processes.

Many processes use open circuit voltages sufficient to spark from the electrode to the work without making an intimate contact. In processes like the GTAW process, it may take several thousand volts to cause an electrical spark to jump this gap between the electrode and the work creating an initial path of ionization that the arc current can follow. In the submerged arc welding process, granules of flux often get between the electrode and the work piece making starting of the arc difficult at normal open circuit voltage.

Thus arc stabilizing and starting may require open circuit voltages greater than the maximum values of 5.3. In order to provide these higher voltages, it is common practice to superimpose a high open circuit voltage on the output of welding power sources by using high frequency techniques. The high frequency voltage is considered to be safer than the same voltage at line frequency or dc.

Authorized Engineering Information 9-15-1983.

10.2 DEFINITIONS

10.2.1 Conduction

Conduction is the transmission of HF energy via an electrical conductor or conducting medium. Examples would be wires, pipes, conduits, telephone lines, building beams, guy wires, reinforcement rods, conducting liquids, and such.

NEMA Standard 9-15-1983.

10.2.2 High Frequency (HF)

HF is radio frequency energy, either continuous or pulsed, used to start or stabilize a welding arc.

NEMA Standard 9-15-1983.

10.2.3 High Frequency Stabilized Arc Welding (HFSAW)

HFSAW is any of the arc welding processes utilizing HF.

NEMA Standard 9-15-1983.

10.2.4 Interference

Interference is the unwanted and problematic reception of HF energy.

NEMA Standard 9-15-1983.

10.2.5 Radiation

Radiation is the transmission of HF energy through space.

NEMA Standard 9-15-1983.

10.2.6 Welding Zone

The welding zone is the space within 50 feet (15 m) in all directions from the midpoint between the power source, and welding arc.

NEMA Standard 9-15-1983.

10.3 HF CLASSIFICATION

10.3.1 HF as an Integral Part (HFPS)

When the HF is supplied as an integral part of the power source, the manufacturer shall furnish operation and installation instructions as necessary to minimize radiation and thus minimize possible radio frequency interference.

NEMA Standard 9-15-1983.

10.3.2 HF Supplied as a Separate Unit (HFAU)

When HF units are supplied for attachment to power sources in general, the manufacturer of the HF unit shall supply operation and installation instructions as necessary to minimize radiation and thus minimize possible radio frequency interference, plus precautionary information regarding possible malfunctioning or overheating of the power source.

NEMA Standard 9-15-1983.

HF attachments are to be used only on those power sources specified by the power source manufacturer.

Authorized Engineering Information 9-15-1983.

10.3.3 Enclosure (HFPS or HFAU)

The enclosure of the HFPS or HFAU shall be metallic or metalized plastic of such nature as to provide a shield that can be grounded.

NEMA Standard 9-15-1983.

10.4 RADIO FREQUENCY RADIATION

10.4.1 General

Installations using HF either as an integral part of the power source or as an attachment unit will produce some high frequency radiation. Such radiation, if the signal strength is sufficient at the receiving device, can cause an inconvenience or disruption in communications or can cause malfunction in sensitive electronic controls and systems. To minimize these problems,

Copyright National Electrical Manufacturers Association
Provided by IHS under license with NEMA
No reproduction or networking permitted without license from IHS
Not for Resale

radiation should be held to a minimum. This is best accomplished by following the manufacturer's operation and installation procedures.

Authorized Engineering Information 11-17-1988.

10.4.2 Direct Radiation from the Power Source or HF Attachment Unit (HFAU)

Direct radiation is that radiation emanating directly from the power source or attachment unit. Radiation from power line and welding circuit attachments is not considered to be direct radiation from the power source or attachment unit.

Authorized Engineering Information 11-17-1988.

10.4.3 Direct Radiation From the Welding Circuit

Any attachment to the output terminals of the high frequency source is capable of acting as an antenna and transmitting radiation. Attachments include leads, torches, worktables, and such, either necessary or unnecessary. Since direct radiation from the welding circuit is the major source of radiation, it is important to keep attachments to a minimum.

Authorized Engineering Information 11-17-1988.

10.4.4 Conduction and Radiation from the Power Line

Most power lines are capable of conducting high frequency energy which may cause interference directly or by radiation from these power lines. Most conducted power line radiation comes from direct radiation picked up by the power lines and reradiated. Normally such interference is small when compared to that caused by radiation from the welding leads.

Authorized Engineering Information 11-17-1988.

10.4.5 Reradiation

Radiation from the welding circuit can be picked up by ungrounded metal objects or unshielded wiring in the immediate vicinity, conducted some distance, and reradiated. This can be a troublesome source of interference.

Authorized Engineering Information 11-17-1988.

10.5 GENERAL PRINCIPLES FOR INSTALLATION OF HIGH FREQUENCY STABILIZED ARC WELDING INSTALLATIONS

10.5.1 Primary Power Supply

The HFAU or HFPS should be connected to the primary power supply in accordance with the manufacturer's instructions.

Unless the HFAU or HFPS is supplied with a flexible cord for connection to the primary power supply, the primary power supply conductors located within the welding zone should be completely enclosed in solid metallic conduit or in "equivalent shielding." Shielding should be electrically continuous throughout its length. The shielding is to be connected to the enclosure of the HFAU or HFPS so that good electrical contact is provided between the shielding and the enclosure.

When an HFAU or HFPS is furnished with an attached flexible power cord for connection to the primary power supply, additional shielding of this cord is not normally required. The primary power supply conductors should be shielded in accordance with the above paragraph up to the point of connection of the flexible power cord. The grounding conductor of the flexible cord should be used to provide a good electrical connection between the primary power supply conductor shielding and the HFPS welding enclosure. In case of an HFAU, it may be necessary to shield the existing flexible power cord connected to the power source or to replace it with primary supply conductors completely enclosed in solid metallic conduit or equivalent shielding. Consult manufacturer's instructions for both power source and HFAU installation.

Authorized Engineering Information 9-15-1983.

10.5.2 Access Doors and Covers

When the HFAU or HFPS is in operation, all access doors and covers should be closed and properly fastened. Except for those changes and adjustments covered in the manufacturer's instructions, units should not be altered in any way.

Authorized Engineering Information 9-15-1983.

10.5.3 Shielding of Miscellaneous Wiring in the Welding Zone

The connection of the ground to the shielding of the miscellaneous wiring in the welding zone should be at the closest proximity to the midpoint between the welding terminals and the arc. Conduit sections should be electrically bonded together.

Ungrounded metallic conductors in the welding zone can act as antennae that will pick up, conduct, and reradiate the HF energy transmitted by the welding circuit. Therefore, no unshielded miscellaneous conductors should be located within the welding zone. This means that all lighting, power, telephone, communication, and other conductors within the welding zone should be enclosed in welding grounded rigid metallic conduit, copper braid, or some other material having an equivalent shielding efficiency. Ordinary flexible helically wrapped metallic conduit is generally not suitable.

Authorized Engineering Information 11-17-1988.

Copyright National Electrical Manufacturers Association
Provided by IHS under license with NEMA
No reproduction or networking permitted without license from IHS
Not for Resale

10.5.4 Miscellaneous Conducting Materials in the Welding Zone

Miscellaneous conducting materials should not be located in the welding zone. Such materials that cannot be excluded should be grounded.

Authorized Engineering Information 1-11-1983.

10.5.5 Welding Circuit

The welding leads should be kept as short as possible and should not exceed 25 feet (7.6 m) in length. These leads should be positioned close together and should be kept as close to the ground or floor as possible. The use of unnecessary attachments, such as spare or auxiliary torches, electrode holders and such. in the welding circuit should not be allowed.

The magnitude of the HF energy transmitted as well as the frequency spectrum of such transmission may be altered substantially by changing the lengths or position of the welding leads.

Authorized Engineering Information 11-17-1988.

10.5.6 Grounding of the Welding Circuit

The most important ground connection is usually the one that is attached to the work terminal of an HFPS or the work connection of an HFAU. Therefore, unless otherwise specified by the manufacturer, the user should provide this ground connection according to ANSI Z49.1 as follows:

a. An impedance of not more than two ohms at the fundamental frequency and through the tenth harmonic of the fundamental frequency should be connected between the work terminal or connection and the enclosure of the HFAU or HFPS.
b. Further, the enclosure should be connected to a driven ground rod or to a metal water pipe either of which should enter the earth within 10 feet (3 m) of the power supply case.
c. All electrical connections should be made with clean bright metal surfaces.

Authorized Engineering Information 1-11-1983.

10.5.7 Metal Buildings

Locating an HFSAW installation within an electrically bonded and grounded metal building can be an effective means of reducing HF radiation. It is recommended that, wherever possible, HFSAW installations be made in such places.

Authorized Engineering Information 9-15-1983.

10.6 CERTIFICATION OF HFSAW INSTALLATIONS

10.6.1 Introduction

The *Code of Federal Regulations,* Title 47 "Telecommunications," Part 18 requires all high frequency stabilized arc welding installations to have certification. Certification can be based on manufacturer's prototype tests when equipment is installed in accordance with the manufacturer's instructions, or by actual on-site measurements.

Authorized Engineering Information 9-15-1983.

10.6.2 On-site Certification

On-site testing for certification is the measurement of HF radiation as installed and operated on the user's premises. Users with a large number of machines may choose this method as the easiest and most expedient because there are no specific installation requirements other than those concerned with safe practices in the work place and any that might be necessary to obtain satisfactory measurements.

Procedures for certification based on-site measurements are given in FCC rules and regulations.

Authorized Engineering Information 9-15-1983.

10.6.3 Prototype Certification

As an alternative to on-site certification, prototype certification may be chosen. This means that certification of an installation is based on the manufacturer's prototype tests. To certify an installation by the prototype procedure, the manufacturer conducts tests described in 10.6.4. Based on these test results, the manufacturer provides instructions for the HFSAW installation and operation. When the HFSAW installation is as specified by the manufacturer and the equipment is being operated in accordance with the manufacturer's instructions, the user so stipulates by signing a certification form provided by the manufacturer. The term "user" means a person having overall responsibility for the installation and operation of the equipment. For example, this person may be a company officer, superintendent, or general foreman.

Authorized Engineering Information 9-15-1983.

10.6.4 Test Procedure for Prototype Certification

10.6.4.1 Measurement of Field Strength

Measurement to determine the field strength of HF radiation that is generated by a HFSAW installation shall be made in accordance with the *Code of Federal Regulations,* Title 47, Part 18* and American National Standard Institute (ANSI), *Methods of Measurement of Radio Emission from Low-Voltage Electrical and Electronic Equipment in the range of 10KHz to 1GHz,* ANSI Publication No. C63.4 utilizing the test setup described in 10.6.4.4.

NEMA Standard 9-15-1983.

*Office of Information and Regulatory Affairs, Management and Budget, Old Executive Office Building, Washington, D.C. 20503, 202-395-3000. Attention Deck Officer for Federal Communications Commission.

Copyright National Electrical Manufacturers Association
Provided by IHS under license with NEMA
No reproduction or networking permitted without license from IHS
Not for Resale

10.6.4.2 Measuring Instrument

Broad band emissions from the HFSAW installation shall be measured by an instrument having performance characteristics that are similar to those given in the American National Standard, *Standard or Instrumentation – Electromagnetic Noise and Field-Strength, 10KHz to 406Hz – Specification,* ANSI Publications No. C63.2.

Quasi-peak values of field strength shall be measured and used to determine the conformity with Part 18 of the Federal Communications Commission's Rules and Regulations.

A suitable loop antenna shall be used. The height of this antenna shall not exceed 12 feet (3.7 m) above the immediate terrain as measured to the center of the antenna.

NEMA Standard 9-15-1983.

Instruments that do not have the characteristics described in this Section may be used provided that a suitable correlation factor is used to adjust the field strength readings to values that would be obtained with an instrument having the specified characteristics. The derivation of this correlation factor may be explained in detail.

Authorized Engineering Information 9-15-1983.

10.6.4.3 Measuring Procedures

Measurement shall be made with the HFAU or HFPS "ON" while welding or while not welding, whichever condition yields the higher radiation. The "welding condition" means that the welding leads shall terminate in an actual arc or a load with a low HF impedance. The "not welding condition" means that the welding leads shall terminate in an open circuit. The presence of current other than that produced by the high frequency arc stabilizer is not required.

To determine the radiation attenuation with respect to distance, additional measurements shall be made at a minimum of 200 feet (60.1 m) increments in a straight radial line out to 1,000 feet (305 m) or to the measurement limits of the instrument, whichever comes first. These are made over the same frequency range and using the loop antenna procedure and midpoint as above. The fundamental and significant harmonic peaks shall be recorded. A control that affects the intensity of the high frequency shall be set for maximum intensity. Spark gaps and other internal adjustments shall be set in accordance with the manufacturer's instructions.

NEMA Standard 9-15-1983.

10.6.4.4 Manufacturer's Test Installation

1. Location
   Tests shall be made in a level open field which shall be as free as possible of wire fences and other metallic objects.
2. Ground Plane
   Measurements shall be made with the HFSW installation operated on a continuous metal ground plane. This ground plane shall be of at least 0.025 inch (0.64 mm) thick copper or of at least 0.040 inch (1.02 mm) thick aluminum. The ground plane shall be at least 36 inches (91.4 mm) in width. If the equipment to be tested exceeds 36 in. (91.4 mm) in width, then a ground plane of at least equal width shall be used. The ground plane shall be of at least sufficient length to extend from the outer edge of the work table to the rear of the power source.
   Minimum grounding for the ground plane shall be a copper clad steel rod at least 0.5 inch (12.7 mm) diameter located at the center of the ground plane width and at the rear of the power source. The rod shall be driven at least 8 feet (2.4 m) into the earth. The ground plane shall be bonded to this rod in accordance with good radio frequency bonding practice.
3. Work table
   The work table shall be of steel and shall have the following approximate dimensions:
   Length – 30 inches (762 mm)
   Width – 30 inches (762 mm)
   Height – 30 inches (762 mm)
   A clamp shall be provided to hold the electrode holder or torch in position on the work. All four legs of the work table shall be suitably bonded to the ground plane. If a low HF impedance load is used, it shall be placed as close as practical to the point that would normally be the welding arc.
4. The HF equipment shall be positioned over the ground plane but separated from it by approximately 0.75 inch (19.0 mm) of electrical insulating material. The work terminal and the enclosure(s) shall be bonded to the ground plane (see 10.5).
5. Power shall be furnished to the equipment as specified in the manufacturer's instructions. When power cords are furnished, they shall be used. Safety grounds as found in normal power service shall also be attached.
   Multiphase power sources shall be tested with power to all three phases or, alternately, with the power being supplied to the high frequency arc stabilizer only, provided that a low HF impedance load is used in accordance with 10.6.2.3.
6. The test setup is shown in Figure 10-1. The arc or load shall be located 25 feet (7.6 m) from the welding terminals of the HFPS or HFAU and shall be centered on the work table. Welding leads shall have an ampacity conforming to the rating of the

Copyright National Electrical Manufacturers Association
Provided by IHS under license with NEMA
No reproduction or networking permitted without license from IHS
Not for Resale

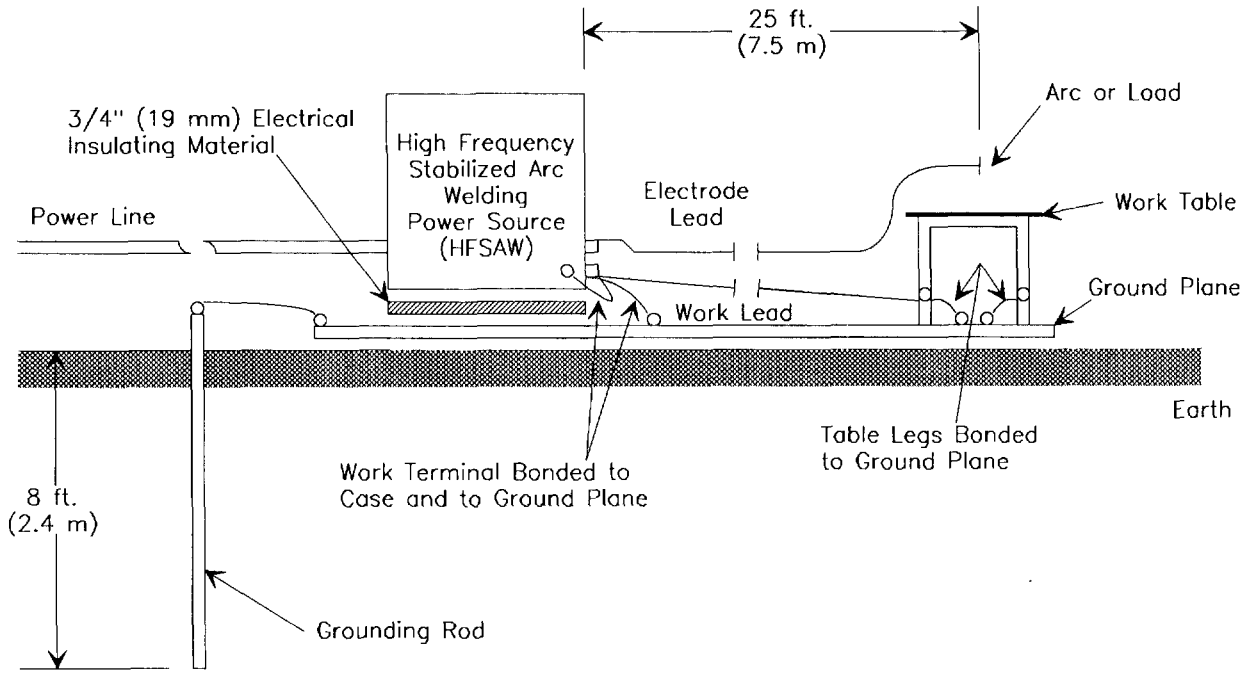

Figure 10-1
TEST SETUP

power source. They shall be as short as possible, positioned close together and lying on the ground plane.

NEMA Standard 9-15-1983.

10.6.5 Data Requirements and Limits

The data taken at 100 feet (30.5 m) shall be plotted or examined by any convenient or graphical method to determine the presence or absence of lobes. If the plot is basically circular—that is, not more than 6 db variation, then the radial measurement out to 1,000 feet (305 m) can be made in any convenient direction. If the 1,000 feet (305 m) radial series is taken where the variation is greater than 6 db from circular, the radial measurements must be made in the direction of the maximum lobe or the data corrected to correspond to a maximum lobe.

The 1,000 feet (305 m) radial data shall be examined and an extrapolation made either graphically or mathematically to determine the radiation level that would exist at one mile. The limit of radiation shall be a maximum of 10 microvolts per meter at 1 mile.

NEMA Standard 9-15-1983.

A convenient way to make this determination is to use linear by three cycle log paper. Plot the measured db on the linear axis and the distance on the log axis starting at cycle 2 as 100 feet (30.5 m).

Authorized Engineering Information 9-15-1983.

10.6.6 Interference

In the case of interference from an HF installation, it is the user's responsibility to confirm compliance with the *Code of Federal Regulations,* Title 47, Part 18 or to take such action as necessary to reduce or eliminate such interference to a point satisfactory to the parties involved.

Authorized Engineering Information 9-15-1983.

Copyright National Electrical Manufacturers Association
Provided by IHS under license with NEMA
No reproduction or networking permitted without license from IHS
Not for Resale

NEMA STANDARDIZATION

The purpose of NEMA Standards, their classification and status, are set forth in certain clauses of the NEMA *Standardization Policies and Procedures* manual and are referenced below.

Purpose of Standards

National Electrical Manufacturers Association standards are adopted in the public interest and are designed to eliminate misunderstandings between the manufacturer and the purchaser and to assist purchasers in selecting and obtaining the proper product for their particular needs. Existence of a National Electrical Manufacturers Association standard does not in any respect preclude any member or nonmember from manufacturing or selling products not conforming to the standard. *(Standardization Policies and Procedures, p. 1)*

Definition of a Standard

A standard of the National Electrical Manufacturers Association defines a product, process, or procedure with reference to one or more of the following: nomenclature, composition, construction, dimensions, tolerances, safety, operating characteristics, performance, rating, testing, and the service for which they are designed.

(Standardization Policies and Procedures, p. 2)

Dimensions

Where dimensions are given for interchangeability purposes, alternate dimensions satisfying the other provisions of the Standards Publication may be capable of otherwise equivalent performance.

(Standardization Policies and Procedures, p.8)

Categories of Standards

National Electrical Manufacturers Association Standards are of two classes:

1. NEMA Standard, which relates to a product, process, or procedure commercially standardized and subject to repetitive manufacture, which standard has been approved by at least 90 percent of the members of the Subdivision eligible to vote thereon;
2. Suggested Standard for Future Design, which may not have been regularly applied to a commercial product, but which suggests a sound engineering approach to future development, which standard has been approved by at least two-thirds of the members of the Subdivision eligible to vote thereon.

(Standardization Policies and Procedures, pp. 7 & 16)

Authorized Engineering Information

Authorized Engineering Information consists of explanatory data and other engineering information of an informative character not falling within the classification of NEMA Standard or Suggested Standard for Future Design, which standard has been approved by at least two-thirds of the members of the Subdivision eligible to vote on the standard.

(Standardization Policies and Procedures, pp. 7 & 16)

Official Standards Proposal

An Official Standards Proposal is an official draft of a proposed standard which is formally recommended to an outside organization(s) for consideration, comment, and/or approval, and which has been approved by at least 90 percent of the members of the Subdivision eligible to vote thereon.

(Standardization Policies and Procedures, pp. 7 & 16)

Identification of Status

Standards in NEMA Standards Publications are identified in the foreword or following each standard as "NEMA Standard" or "Suggested Standard for Future Design." These indicate the status of the standard. These words are followed by a date which indicates when the standard was adopted in its present form by the Association.

The material identified as "Authorized Engineering Information" and "Official Standards Proposal" is designated similarly.

Copyright National Electrical Manufacturers Association
Provided by IHS under license with NEMA
No reproduction or networking permitted without license from IHS
Not for Resale

ARC WELDING SECTION
OF THE
NATIONAL ELECTRICAL MANUFACTURERS ASSOCIATION

MEMBER COMPANIES

Alloy Rods Corporation
Hanover, PA 17331

Century Manufacturing Company
Minneapolis, MN 55431

C K Systematics, Inc.
Auburn, WA 98002

ESAB Welding Products, Inc.
Chicago, IL 60632

Hobart Brothers Company
Troy, OH 45373

Hypertherm, Incorporated
Hanover, NH 03755

The Lincoln Electric Company
Cleveland, OH 44117

L-TEC Welding & Cutting Systems
Florence, SC 29501

Miller Electric Mfg. Company
Appleton, WI 54912

National Standard Company
Niles, MI 49120

Pow Con Inc.
San Diego, CA 92126

Sandvik Steel Company
Welding and Wire Division
Scranton, PA 18501

Stoody Deloro Stellite, Inc.
St. Louis, MO 63105

Teledyne McKay
York, PA 17405-1509

Thermadyne Industries, Inc.
St. Louis, MO 63105

Copyright National Electrical Manufacturers Association
Provided by IHS under license with NEMA
No reproduction or networking permitted without license from IHS
Not for Resale