EI 25-84 6470247 0000843 7
F-69-05

STANDARDS PUBLICATION/NO. EI 25-1984

nema

Cartridge Type Solid-State Pulse Recorders for Electricity Meters

NEMA

NATIONAL ELECTRICAL MANUFACTURERS ASSOCIATION ■ 2101 L STREET, N.W., WASHINGTON, D.C. 20037

Copyright National Electrical Manufacturers Association
Provided by IHS under license with NEMA
No reproduction or networking permitted without license from IHS
Not for Resale

© 1984 by the National Electrical Manufacturers Association

Copyright National Electrical Manufacturers Association
Provided by IHS under license with NEMA
No reproduction or networking permitted without license from IHS
Not for Resale

TABLE OF CONTENTS

Page

FOREWORD iii
SCOPE iii

Section 1 REFERENCED STANDARDS 1

Section 2 DEFINITIONS
Time Base—Secondary 2

Section 3 GENERAL REQUIREMENTS
Mounting 3
Basic Electrical Ratings 3
Recorder Nameplate 3
Pulse Initiator Output Constant (Ke) 3

Section 4 CARTRIDGES FOR SOLID-STATE PULSE RECORDERS
Cartridge Dimensions 4
Cartridge Connector Designations 4
Cartridge Recording Capacity 4
Cartridge Performance Verification 4
Cartridge Marking 4

Section 5 RECORDER
Data Channel Verification 5
Battery Carry-Over 5
Input Circuits 5
Terminal Designations 5
Demand Intervals 5
Clock Time 5

Section 6 RECORDER ENCLOSURES
Typical Maximum Dimensions for Recorder Enclosures 6
Equipment Grounding 6
Enclosure Finish Requirements 6
Rain Test Requirements for Outdoor Applications 6

Section 7 PERFORMANCE REQUIREMENTS
Insulation 7
Transient Suppression Tests 7
Recorder Performance Testing 7

FIGURES
6-1 Recorder Enclosure Dimensions 6
6-2 Recorder Enclosure For An Internally Mounted Watthour Meter 7
6-3 Recorder Enclosure For An Externally Mounted Watthour Meter 8

APPENDICES
A Design and Construction Requirements 10
B-1 Type SS1 & SS6 Recorder Cartridge Dimensions 11
B-2 Type SS2 Recorder Cartridge Dimensions 12
B-3 Type SS3 Recorder Cartridge Dimensions 13

(continued)

Copyright National Electrical Manufacturers Association
Provided by IHS under license with NEMA
No reproduction or networking permitted without license from IHS
Not for Resale

TABLE OF CONTENTS *(continued)* **Page**

B-4 Type SS4 Recorder Cartridge Dimensions 14
B-5 Type SS5 Recorder Cartridge Dimensions 15
C-1 Type SS1 & SS6 Recorder Cartridge Connector Pin Designations 16
C-2 Type SS2 Recorder Cartridge Connector Pin Designations ... 16
C-3 Type SS3 Recorder Cartridge Connector Pin Designations ... 17
C-4 Type SS4 Recorder Cartridge Connector Pin Designations ... 17
D-1 Type SS1 Recorder Terminal Designations 18
D-2 Type SS2 Recorder Terminal Designations 18
D-3 Type SS3 Recorder Terminal Designations 18
D-4 Type SS4 Recorder Terminal Designations 18
D-5 Type SS5 Recorder Terminal Designations 19
D-6 Type SS6 Recorder Terminal Designations 19

Copyright National Electrical Manufacturers Association
Provided by IHS under license with NEMA
No reproduction or networking permitted without license from IHS

Not for Resale

Foreword

These standards are made available for the manufacturer and for the purchaser in order to assist them in selecting and obtaining a suitable product. The use of these standards is at the option of the individual manufacturer and purchaser. It is anticipated that those who use them will derive benefits of functional interchangeability.

To assure a meaningful publication, copies were sent during the draft stage to a number of typical individuals and organizations in the public and private sectors having an interest in or responsibility for the purchase, testing, application, use, or inspection of this product category. The resulting comments and suggestions provided a vital user and general interest input to final NEMA approval and resulted in a number of substantive changes in this publication.

As future major revisions to this publication are proposed, the same or similar individuals or organizations will be offered a further opportunity to participate in the development of this publication.

Proposed or recommended revisions should be submitted to:

Manager, Engineering Department
National Electrical Manufacturers Association
2101 L Street, N.W.
Washington, D.C. 20037

Scope

This Standards Publication provides recommended minimum requirements for solid-state pulse recorders with removable data cartridges for electricity meters. This standard covers the voltage and frequency ratings, enclosure requirements, and other general specifications for Cartridge Type Solid-State Pulse Recorders. Specifications contained herein are intended to assure recorder reliability to the extent that such a quality can be demonstrated by laboratory testing.

Copyright National Electrical Manufacturers Association
Provided by IHS under license with NEMA
No reproduction or networking permitted without license from IHS
Not for Resale

CARTRIDGE TYPE SOLID-STATE PULSE RECORDERS FOR ELECTRICITY METERS

Section 1
REFERENCED STANDARDS

American National Standards Institute
1430 Broadway
New York, New York 10018

C12.1-1982 *Code for Electricity Metering*

Institute of Electrical and Electronics Engineers
345 East 47th Street
New York, New York 10017

ANSI-IEEE C37.90-1978(R1983) *Relays*

Underwriters Laboratories Inc.
1285 Walt Whitman Road
Melville, Long Island, New York 11745

Research Bulletin No. 23 *Rain Tests of Electrical Equipment—Methods and Apparatus,* (Issued September, 1941).

American Society for Testing and Materials
1916 Race Street
Philadelphia, PA 19103

ANSI/ASTM B117-78 (1979) Methods of Salt-Spray (Fog) Testing

Copyright National Electrical Manufacturers Association
Provided by IHS under license with NEMA
No reproduction or networking permitted without license from IHS
Not for Resale

Section 2
DEFINITIONS

Only definitions not included in the American National Standard *Code for Electricity Metering,* C12.1-1982, are contained in this section. For other applicable definitions see ANSI C12.1-1982 (referenced in Section 1).

2.1 TIME BASE—SECONDARY

A timing system established from an alternate source when the line source is not available.

NEMA Standard 7-12-1983.

Copyright National Electrical Manufacturers Association
Provided by IHS under license with NEMA
No reproduction or networking permitted without license from IHS

Not for Resale

Section 3
GENERAL REQUIREMENTS

Only requirements not included in American National Standard *Code for Electricity Metering,* C12.1-1982, are contained in this section. Requirements which are part of C12.1-1982 are included in Appendix A.

3.1 MOUNTING

Mounting provision shall be made for installing these devices at metering installations to ensure specified positioning and adequate space for wiring and cartridge handling.

3.2 BASIC ELECTRICAL RATINGS

Ratings shall include 120, 240, and 277 volts; 60 Hertz; 2 Wire.

3.3 RECORDER NAMEPLATE

3.3.1 Required Information

Recorder nameplates shall contain the following information:

1. Manufacturer's name or trademark.
2. Manufacturer's serial number.
3. Manufacturer's type designation.
4. Voltage rating.
5. Frequency (Hertz).
6. Number of channels, unless included in manufacturer's application data.
7. Interval, unless included in manufacturer's application data.
8. Type of input, unless included in manufacturer's application data.
9. Battery carryover, unless included in manufacturer's application data.

3.3.2 Permissible Unit Symbols and Abbreviations

For the purposes of this Standards Publication, the following shall be permissible unit symbols and abbreviations:

V = volts
W = wire
Hz = hertz
int, INT, or T = interval
Ke = pulse-initiator output constant

3.4 PULSE-INITIATOR OUTPUT CONSTANT (Ke)

Space shall be provided for marking the pulse-initiator output constant value of each data channel.

NEMA Standard 7-12-1983.

Copyright National Electrical Manufacturers Association
Provided by IHS under license with NEMA
No reproduction or networking permitted without license from IHS
Not for Resale

Section 4
CARTRIDGES FOR SOLID-STATE PULSE RECORDERS

For the purpose of this Standards Publication, recorders shall be designated according to their basic dimensions, as well as the mechanical and electrical interface of the cartridge used.

4.1 CARTRIDGE DIMENSIONS

Although standard cartridge dimensions have not yet been established due to the emerging state of this technology, typical cartridge dimensions are illustrated in Appendix B. Please note that although all known variations have been included, these illustrations have been provided for illustrative purposes only, and should not be construed to be all-inclusive of all possible configurations.

Authorized Engineering Information 7-12-1983.

4.2 CARTRIDGE CONNECTOR DESIGNATIONS

Although standard cartridge connector designations have not yet been established due to the emerging state of this technology, typical cartridge connector designations are illustrated in Appendix C. Please note that although all known variations have been included, these designations have been provided for illustrative purposes only, and should not be construed to be all-inclusive of all possible configurations.

Authorized Engineering Information 7-12-1983.

4.3 CARTRIDGE RECORDING CAPACITY

Minimum recording capacity shall be 34 days unless otherwise specified by the manufacturer.

NEMA Standard 7-12-1983.

4.4 CARTRIDGE PERFORMANCE VERIFICATION

The ability of all cartridge memory locations to receive, retain, and output data shall be verifiable.

NEMA Standard 7-12-1983.

4.5 CARTRIDGE MARKING

Solid state pulse recorder cartridges shall be marked with the following information:

1. Manufacturer's name or trademark.
2. Manufacturer's serial number.
3. Manufacturer's type or style number designations.

NEMA Standard 7-12-1983.

Copyright National Electrical Manufacturers Association
Provided by IHS under license with NEMA
No reproduction or networking permitted without license from IHS

Not for Resale

Section 5
RECORDER

5.1 DATA CHANNEL VERIFICATION

A method shall be provided for verifying the operation of each data channel of the recorder.

NEMA Standard 7-12-1983.

5.2 BATTERY CARRY-OVER

Battery carry-over shall enable the recorder to maintain time accuracy during a period of power outage under operating conditions as specified by the user. The accuracy of the secondary time base shall be within ± 0.02 percent.

NEMA Standard 7-12-1983.

5.3 INPUT CIRCUITS

Input circuits shall accommodate 3-wire Form C contacts.

NEMA Standard 7-12-1983.

5.4 TERMINAL DESIGNATIONS

Although standard terminal designations have not yet been established due to the emerging state of this technology, typical terminal designations are illustrated in Appendix D. Please note that although all known terminal designations for cartridge type solid-state pulse recorders have been included, these designations have been provided for illustrative purposes only, and should not be construed to be all-inclusive of all possible configurations.

Authorized Engineering Information 7-12-1983.

5.5 DEMAND INTERVALS

Typical demand intervals shall be 5, 15, 30, and 60 minutes.

NEMA Standard 7-12-1983.

5.6 CLOCK TIME

Clock time shall be on a 24-hour basis, with hours numbered from 0 to 23 hours.

NEMA Standard 7-12-1983.

Copyright National Electrical Manufacturers Association
Provided by IHS under license with NEMA
No reproduction or networking permitted without license from IHS
Not for Resale

Section 6
RECORDER ENCLOSURES

6.1 TYPICAL MAXIMUM DIMENSIONS FOR RECORDER ENCLOSURES

Recorder enclosure dimensions for typical installations shall be in conformance with the figures references as follows:

Recorder Enclosures	Figure
Recorder only	6-1
Recorder, internally mounted meter	6-2
Recorder, externally mounted meter	6-3

6.2 EQUIPMENT GROUNDING

A method shall be provided for the attachment of an equipment grounding conductor to noncurrent carrying metallic parts of the recorder enclosure.

6.3 ENCLOSURE FINISH REQUIREMENTS

The recorder enclosure shall have a general purpose finish suitable for indoor or outdoor applications specified in 6.3.1.

6.3.1 Test for General-Purpose Finish

A recorder enclosure with a general-purpose finish shall withstand the following environmental tests. For the purposes of these tests, a sample shall consist of a complete recorder in its enclosure. A new sample shall be used for each test.

6.3.1.1 Weather Simulation Test

The test sample shall be mounted in the normal operating position in a weather simulation device (equivalent to the BWM-C weatherometer manufactured by the Atlas Electric Devices Co. of Chicago, Illinois). A recorder that has provision for attachment to an electricity meter shall be tested with the meter and recorder combination installed in a standard meter socket with the conduit holes sealed against moisture.

The test sample shall then be exposed for a series of 18-minute cycles for 14 days to the following weather conditions:

1. Direct ultraviolet radiation throughout approximately 93 percent of the weatherometer cycle.
2. Fresh-water spray applied to the front and top of the test sample throughout approximately 7 percent of the weatherometer cycle.

After this test, the covers, terminal covers, and so forth shall be readily removable. There shall be no progressive corrosion or electrolytic action which will adversely affect the functioning of any part of the apparatus. Also, there shall be no evidence of deleterious discoloration or fading of finishes or materials.

6.3.1.2 Salt-Spray Test

The test sample shall be mounted in its normal operating position in a salt-spray chamber and subjected to a 25-hour salt-spray test in accordance with American National Standard *Methods of Salt-Spray (Fog) Testing*, ANSI/ASTM B117-78 (1979) (Z118.1-1974).

After the test, the cover and detachable components shall be readily removable, and there shall be no progressive corrosion or electrolytic action that

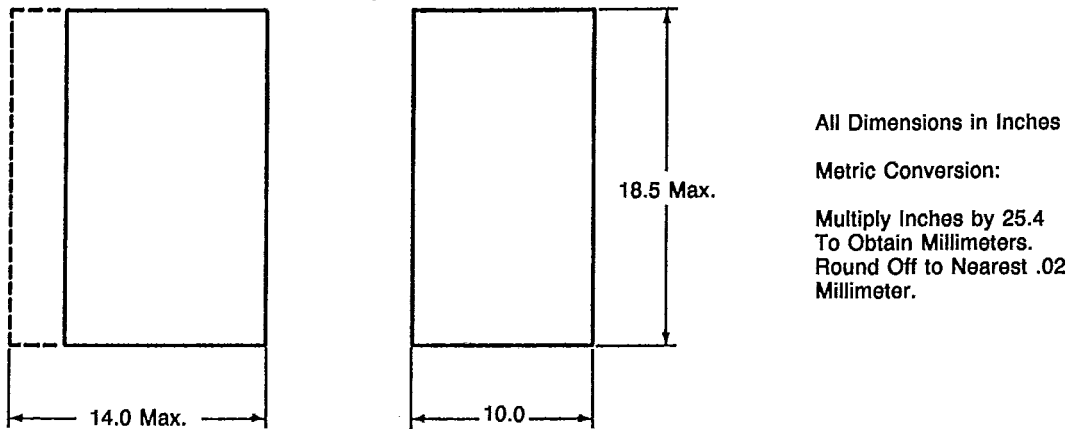

Figure 6-1
RECORDER ENCLOSURE DIMENSIONS

Copyright National Electrical Manufacturers Association
Provided by IHS under license with NEMA
No reproduction or networking permitted without license from IHS
Not for Resale

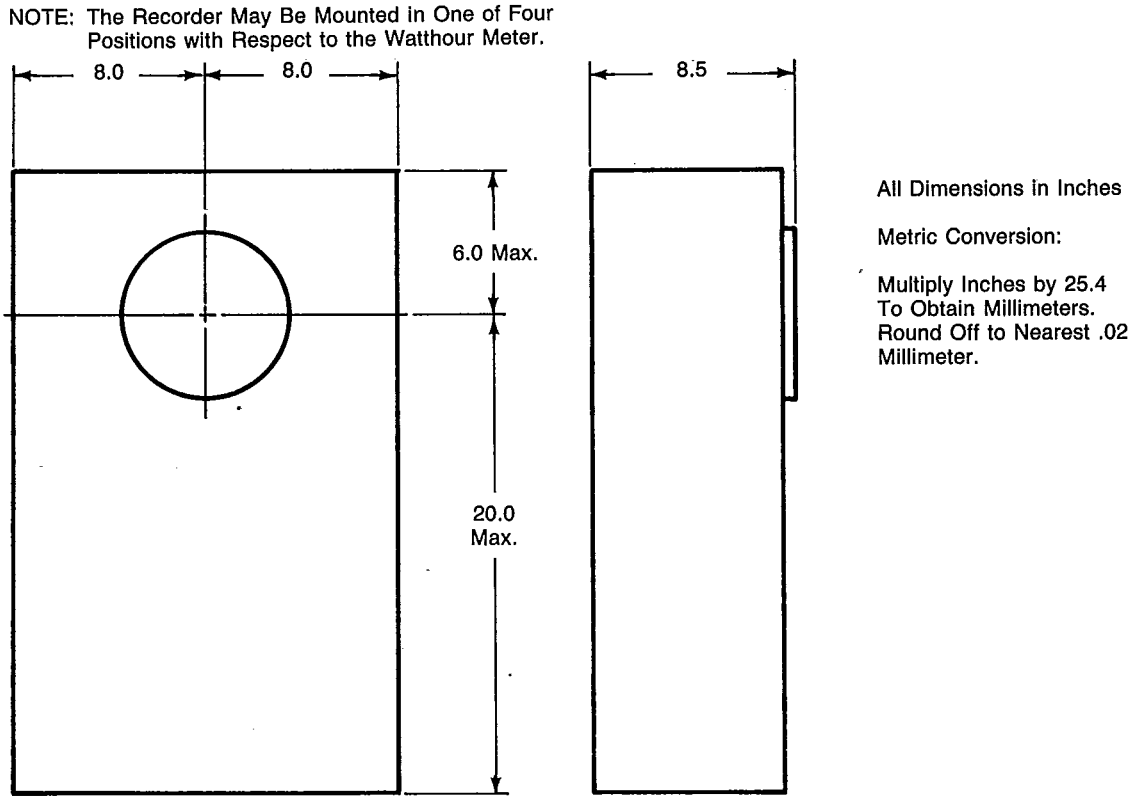

Figure 6-2
RECORDER ENCLOSURE FOR AN INTERNALLY MOUNTED WATTHOUR METER

will adversely affect the functioning of any part of the apparatus.

NEMA Standard 7-11-1984.

6.4 RAIN TEST REQUIRMENTS FOR OUTDOOR APPLICATIONS

The recorder enclosure mounted in its normal operating position with a recorder installed shall pass the test described in Research Bulletin No. 23, *Rain Tests of Electrical Equipment—Methods and Apparatus* (see Section 1).

NEMA Standard 7-12-1983.

The recorder enclosure shall be considered to have met the requirements of the rain test if either evaluation 1 or 2 below is met:

1. There is no significant accumulation of water within the recorder enclosure at a level higher than the lowest live part, except that water shall be permitted to enter above live parts if the equipment is so constructed that no water is visible on the live parts, insulating material, or mechanism parts and no water has entered any space above the live parts within the enclosure in which wiring may be present under any proper installation conditions.
2. No water has entered the recorder enclosure.

NEMA Standard 7-11-1984.

Copyright National Electrical Manufacturers Association
Provided by IHS under license with NEMA
No reproduction or networking permitted without license from IHS
Not for Resale

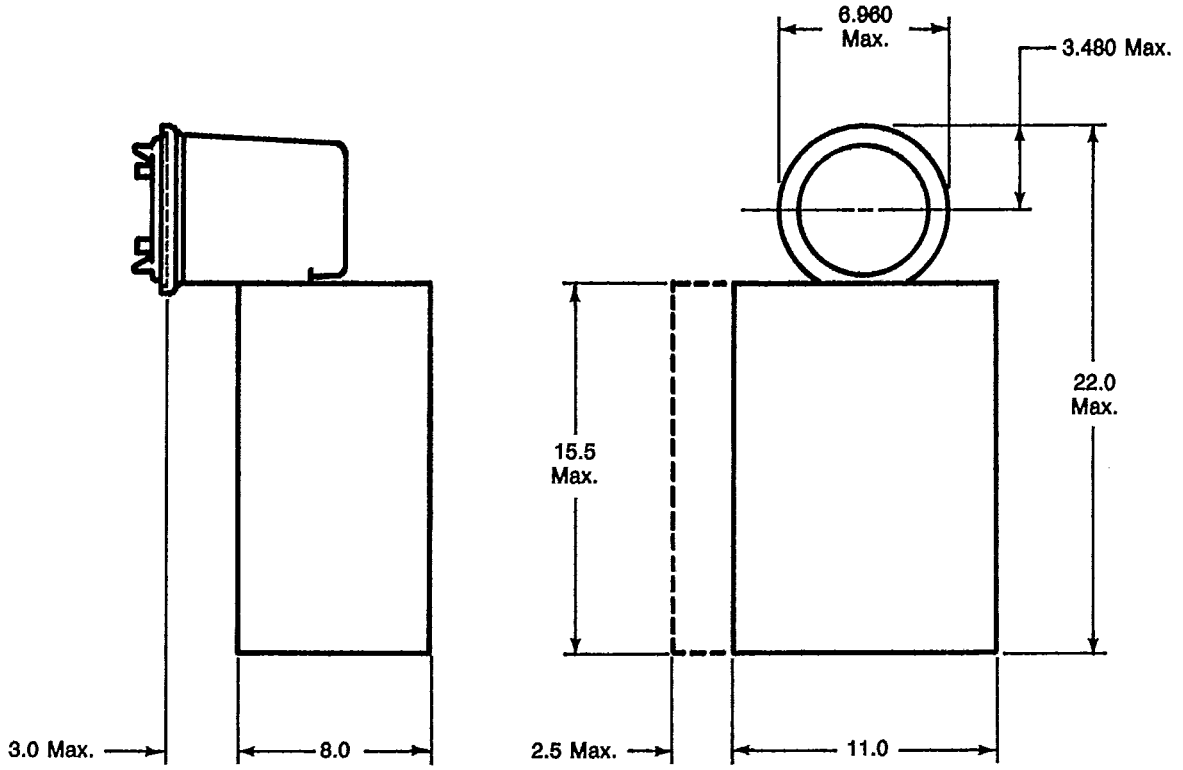

NOTES: The recorder may be mounted in one of four positions with respect to the watthour meter.

The recorder case may be attached to the meter cover.

All dimensions in inches

Metric conversion:

Multiply inches by 25.4 to obtain millimeters. Round off to nearest .02 millimeter.

Figure 6-3
RECORDER ENCLOSURE WITH AN EXTERNALLY MOUNTED WATTHOUR METER

Copyright National Electrical Manufacturers Association
Provided by IHS under license with NEMA
No reproduction or networking permitted without license from IHS
Not for Resale

Section 7
PERFORMANCE REQUIREMENTS

7.1 INSULATION

The insulation between the supply-voltage terminals and the metallic frame or case shall be capable of withstanding the application of a sinusoidal voltage of 1.5 kV rms, 60 Hertz, for one minute with transients suppression devices removed.

Low-voltage electronic circuits and the pulse-input (KYZ) terminals shall not be subjected to the insulation test.

7.2 TRANSIENTS SUPPRESSION TESTS

The supply-voltage terminals and the pulse-input (KYZ) terminals shall withstand the surge withstand capacity (SWC) test of ANSI-IEEE C37.90-1978 (R1983) (see Section 1).

7.3 RECORDER PERFORMANCE TESTING

7.3.1 Initial Conditions

Tests shall be conducted with the cartridge installed and the recorder completely assembled in its enclosure and mounted as it would be in normal operation.

Each test shall cover a period of not less than 10 demand intervals. Pulses shall be supplied to all demand data channels simultaneously at a pulse rate such as to produce a count which is 90 percent of the pulse capacity per interval of the recorder under test.

The pulse count for the reference performance for tests 7.3.3 and 7.3.4 is the pulse count recorded under rated conditions of voltage and frequency and at an ambient temperature of 23°C ± 5°C.

7.3.2 Test No. 1: Recording Performance

The recording performance test shall be made at rated voltage and frequency and at an ambient temperature of 23°C ± 5°C.

The permissible deviation of the number of pulses recorded from the number of pulses applied shall be ± 3 pulses.

7.3.3 Test No. 2: Effects of Variations of Voltage

The test shall be made at rated frequency and at an ambient temperature of 23°C ± 5°C. The pulse count shall not deviate from the reference performance by an amount exceeding that specified in Table 7-1.

Table 7-1
EFFECT OF VARIATION OF VOLTAGE FOR PULSE RECORDERS

Conditions	Percent of Rated Voltage	Permissible Deviation From Reference Pulse Count
Reference Performance	100% ± 1%	...
Condition (1)	85% ± 1%	± 3 pulses
Condition (2)	110% ± 1%	± 3 pulses

7.3.4 Test No. 3: Effect of Variation of Ambient Temperature

The test shall be made at rated voltage and frequency.

The accuracy of the pulse count shall not differ from the reference performance by an amount exceeding that specified in Table 7-2.

The pulse recorder shall be placed in a space having a temperature of 23°C ± 5°C. It shall be allowed to stand for not less than 3 hours with nameplate voltage applied to the supply terminals and the specified pulse rate applied to all channels. After the 3-hour period at this temperature, the test shall be started. This operation shall be repeated at the various values of temperature as shown in Table 7-2.

Table 7-2
EFFECT OF AMBIENT TEMPERATURE, PULSE RECORDER

Conditions	Ambient Temperature	Permissible Deviation From Reference Pulse Count
Reference Performance	23°C ± 5°C	...
Condition (1)	+50°C ± 5°C	± 3 pulses
Condition (2)	−20°C ± 5°C	± 3 pulses

7.3.4.1 TIME-BASE SECONDARY

The test shall be conducted with the recorder in the battery carry-over mode. The accuracy of the secondary time base shall be within 0.02 percent at ambient temperatures of −20°C ± 5°C and +50°C ±5°C.

Copyright National Electrical Manufacturers Association
Provided by IHS under license with NEMA
No reproduction or networking permitted without license from IHS
Not for Resale

APPENDICES

(All appendices in this publication are Authorized Engineering Information 7-11-1984.)

Appendix A
DESIGN AND CONSTRUCTION REQUIREMENTS

The following design and construction requirements from 5.3.4 of the American National Standard Code for *Electricity Metering*, C12.1-1982, are included for ease of reference. They apply specifically to the subject covered by this publication.

5.4.3.1 Type and Designation and Identification. Each pulse recorder shall be designated by type and given a serial number by the manufacturer. The serial number and type designation shall be legibly marked on the frame or chassis of each pulse recorder.

5.3.4.2 Sealing. Pulse recorders shall be provided with facilities for sealing to prevent unauthorized entry.

5.3.4.4 Terminals. The terminals of the pulse recorder shall be so arranged that the possibility of short circuits is minimized when the cover is removed or replaced, connections are made, or tape is replaced.

5.3.4.5 Construction and Workmanship. Pulse recorders shall be substantially constructed of good material in a workmanlike manner, with the objective of attaining stability of performance and sustained accuracy over long periods of time and over wide ranges of operating conditions with a minimum of maintenance.

Copyright National Electrical Manufacturers Association
Provided by IHS under license with NEMA
No reproduction or networking permitted without license from IHS

Not for Resale

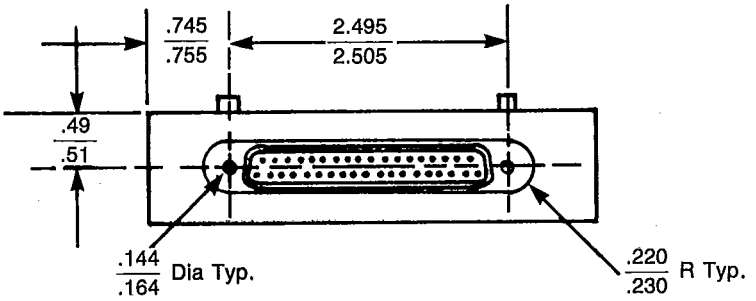

Connector is .120 Dia.

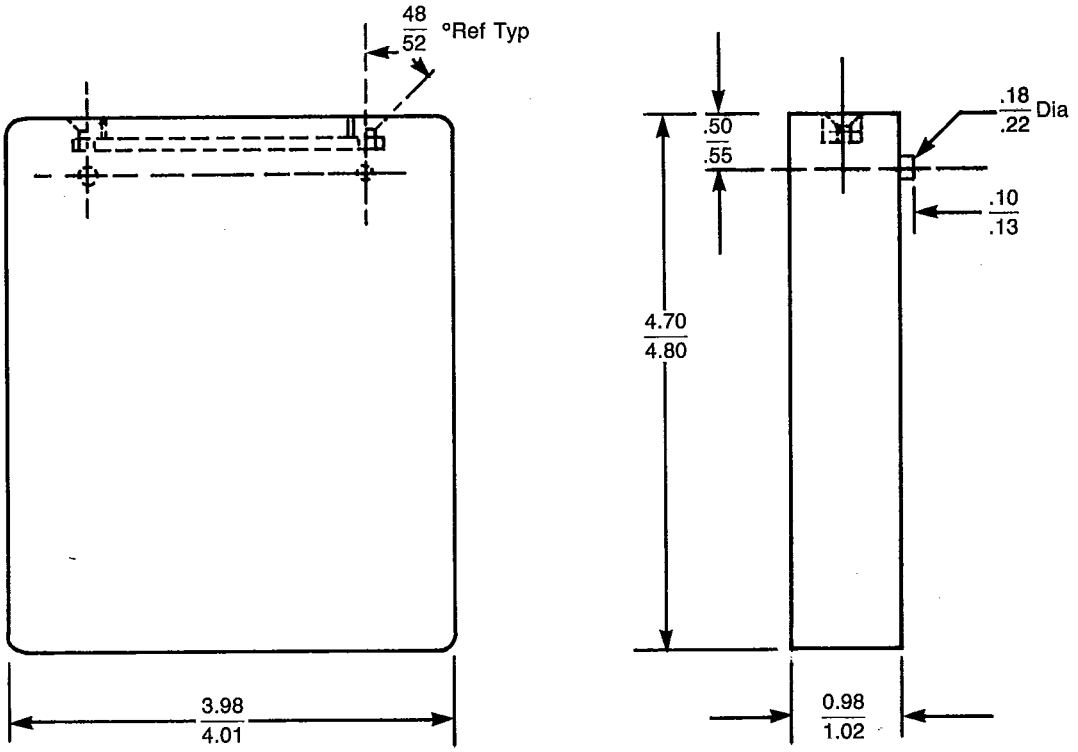

All dimensions in inches

Metric conversion:

Multiply inches by 25.4 to obtain millimeters. Round off to nearest .02 millimeter.

Appendix B-1
TYPE SS1 AND SS6 RECORDER CARTRIDGE DIMENSIONS

Copyright National Electrical Manufacturers Association
Provided by IHS under license with NEMA
No reproduction or networking permitted without license from IHS
Not for Resale

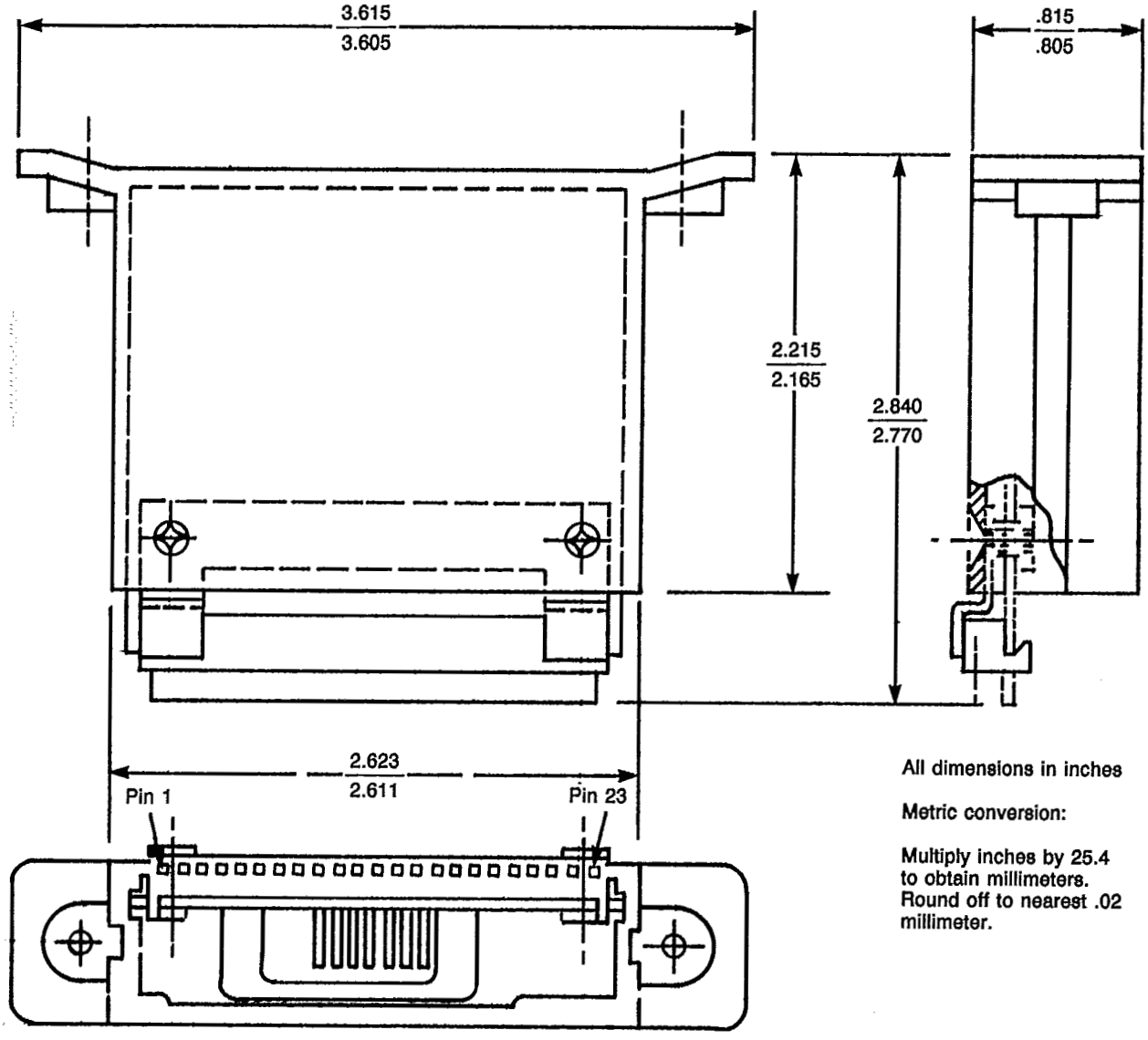

Appendix B-2
TYPE SS2 RECORDER CARTRIDGE DIMENSIONS

Copyright National Electrical Manufacturers Association
Provided by IHS under license with NEMA
No reproduction or networking permitted without license from IHS
Not for Resale

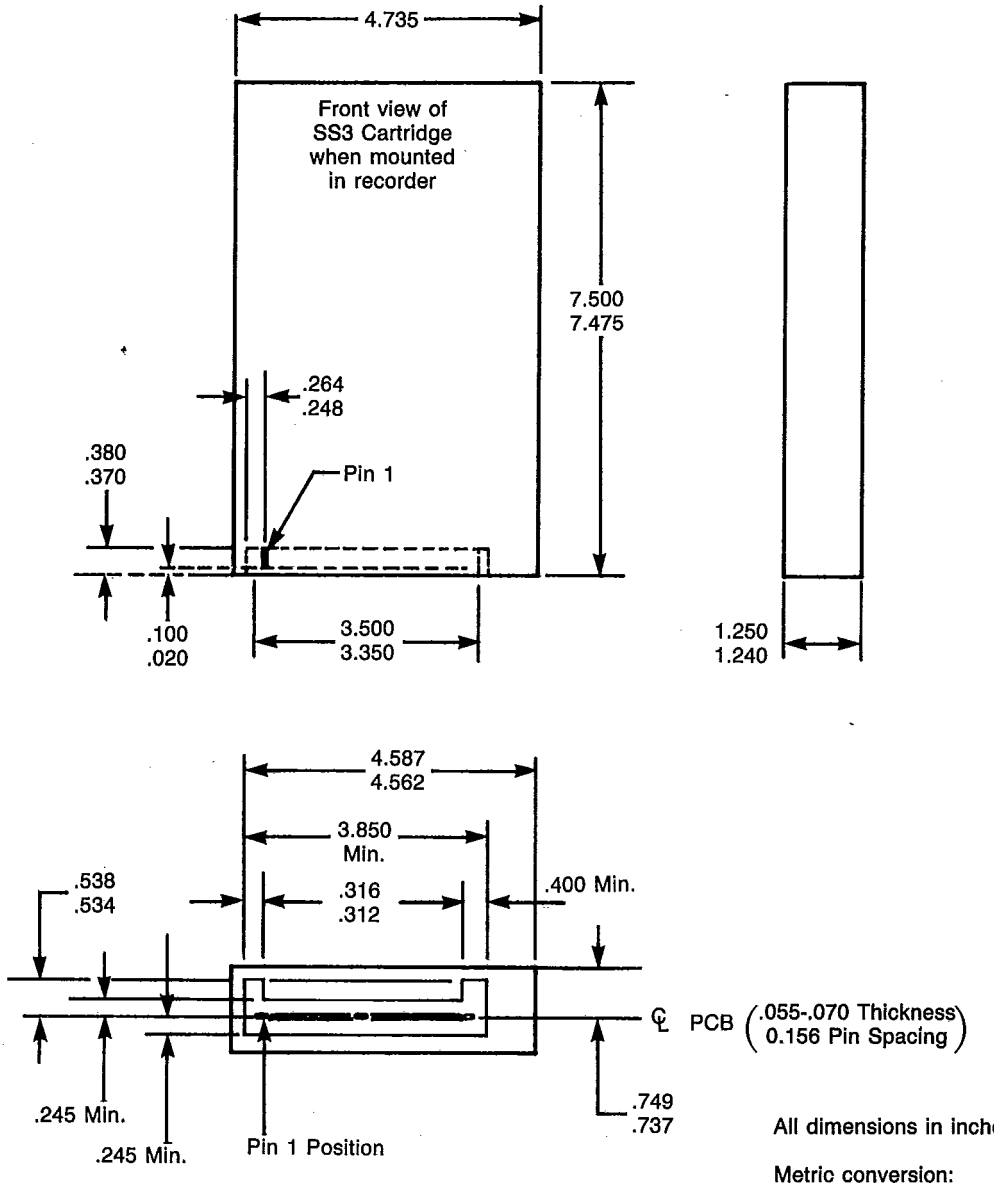

All dimensions in inches

Metric conversion:

Multiply inches by 25.4
to obtain millimeters.
Round off to nearest .02
millimeter.

Appendix B-3
TYPE SS3 RECORDER CARTRIDGE DIMENSIONS

Copyright National Electrical Manufacturers Association
Provided by IHS under license with NEMA
No reproduction or networking permitted without license from IHS
Not for Resale

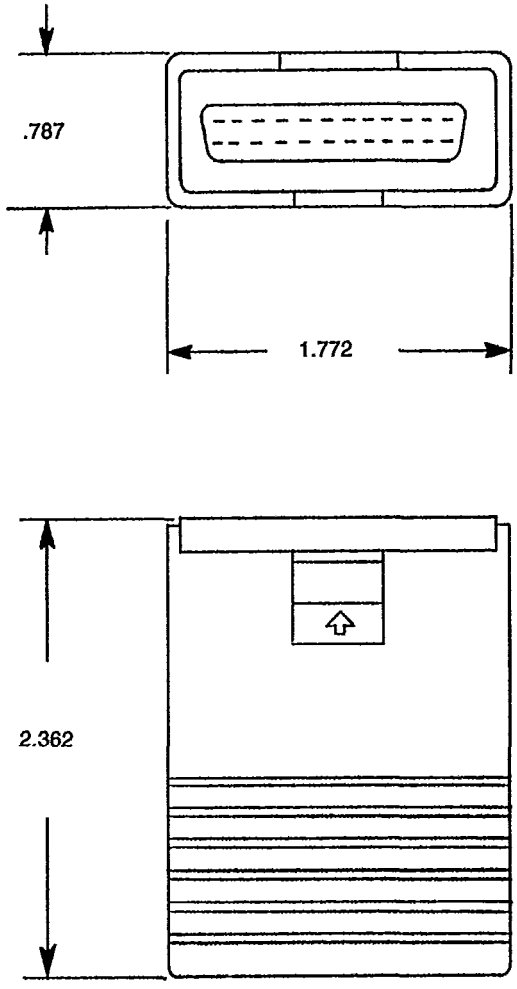

Metric Conversion:

Multiply inches by 25.4
to obtain millimeters.
Round off to nearest .02
millimeter.

All dimensions in inches.

Appendix B-4
TYPE SS4 RECORDER CARTRIDGE DIMENSIONS

Copyright National Electrical Manufacturers Association
Provided by IHS under license with NEMA
No reproduction or networking permitted without license from IHS

Not for Resale

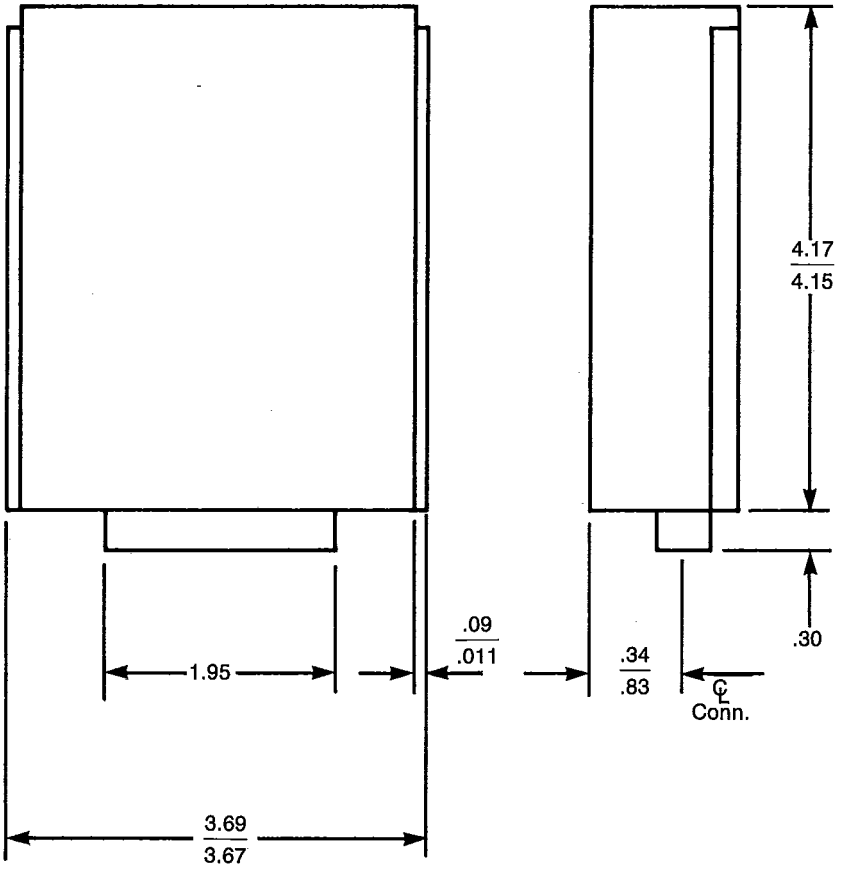

All dimensions in inches

Metric conversion:

Multiply inches by 25.4
to obtain millimeters.
Round off to nearest .02
millimeter.

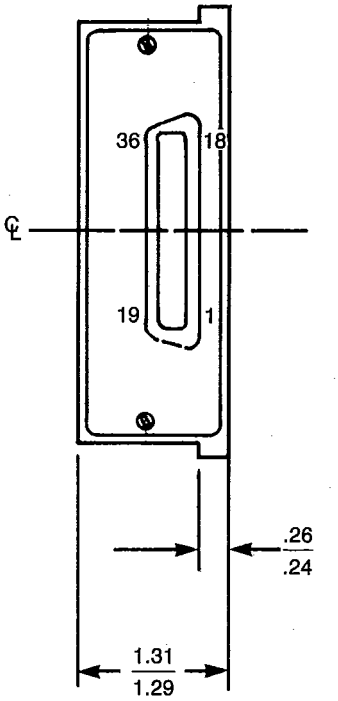

Appendix B-5
TYPE SS5 RECORDER CARTRIDGE DIMENSIONS

Copyright National Electrical Manufacturers Association
Provided by IHS under license with NEMA
No reproduction or networking permitted without license from IHS
Not for Resale

Appendix C-1
TYPE SS1 & SS6 RECORDER CARTRIDGE CONNECTOR PEN DESIGNATIONS

PIN NO.	SIGNAL	PIN NO.	SIGNAL
1	A01	19	+5V
2	A10	20	A00
3	A02	21	CE2
4	OE (low)	22	CE0
5	A03	23	CE3
6	A11	24	CE1
7	A04	25	CE6
8	A09	26	CE4
9	A05	27	CE5
10	A08	28	CE7
11	A06	29	D07
12	A07	30	D06
13	A12	31	D05
14	D02	32	D04
15	D01	33	D03
16	D00	34	OE(32K)
17	VPP	35	GND
18	GND	36	GND
		37	+5V

Pins and connector spacing as per Mil-C-24308/37 pin.

Definition of Symbols

AXX–Memory address lines
DXX–Memory data lines
CEX–Enable each 2048 address
OE–Output enable/erase
VPP–Programming pulse
GND–Ground

Appendix C-2
TYPE SS2 RECORDER CARTRIDGE CONNECTOR PIN DESIGNATIONS

PIN NO.	SIGNAL	PIN NO.	SIGNAL
1	FUNCEN	13	X1
2	REP/ANN	14	Y1
3	^{R}GEN	15	Y2
4	GEN	16	X2
5	XFER	17	$ROMADR_C$
6	$ROMADR_G$	18	$ROMADR_B$
7	$ROMADR_F$	19	$ROMADR_A$
8	GND	20	$ROMADR_D$
9	DET+	21	$ROMADR_E$
10	DET−	22	$ROMADR_H$
11	GND	23	+5 SW
12	+12 SW		

Definition of Symbols

R_{GEN}	Set Generate Current
FUNCEN	Function Enable
$ROMADR_{A-H}$	Redundancy ROM Addresses
X1, X2, Y1, Y2	Coil Drive Currents
XFER	Transfer
GND	System Ground
GEN	Generate Domain Inversion
REP/ANN	Replicate/Annihilate
DET+	Live Detector
DET−	Dummy Detector

Copyright National Electrical Manufacturers Association
Provided by IHS under license with NEMA
No reproduction or networking permitted without license from IHS
Not for Resale

Appendix C-3
TYPE SS3 CARTRIDGE CONNECTOR PIN DESIGNATIONS

PIN NO.	SIGNAL NAME	PIN NO.	SIGNAL NAME
1	GND	23	D3
2	GND	24	DMA OUT
3	+5V	25	D4
4	+5V	26	INT
5	INP1	27	D5
6	INP1	28	TPB
7	INP2	29	D6
8	INP2	30	WAIT
9	INP3*	31	D7
10	INP3*	32	^{V}BAT+
11	OUT1	33	Q
12	OUT1	34	N/C
13	OUT2	35	SC0
14	OUT2	36	N/C
15	OUT3*	37	SC1
16	OUT3*	38	N/C
17	D0	39	N/C
18	N/C	40	N/C
19	D1	41	N/C
20	RESET	42	N/C
21	D2	43	N/C
22	DMA IN	44	N/C

* Reserved for Future Expansion

Definition of Symbols

GRD	Ground
INPX	Buffered Meter Input Lines (Active Low)
OUTX	Channel Status Indicator Output Lines
DX	Data Bus Lines
N/C	No Connection
RESET	Microprocessor Reset Line (Active Low)
DMA IN, DMA OUT	Direct Memory Access Enable Lines (Active Low)
SC0, SC1	Microprocessor State Code Indicator Lines
^{V}BAT+	Battery Voltage Line
TPB	Valid Data on Data Bus Timing Pulse Line
INT	Power Failure Input Line (Active Low)
WAIT	Pause Microprocessor Operation (Active Low)
Q	Microprocessor Ready Indicator Line

Appendix C-4
TYPE SS4 CARTRIDGE CONNECTOR PIN DESIGNATIONS

PIN NO.	SIGNAL NAME	PIN NO.	SIGNAL NAME
1	$\overline{5V}$	19	GND
2	$\overline{CLR}$	20	VB
3	$\overline{RRB}$	21	Blk
4	$\overline{AA13}$	22	BA8
5	AA13	23	WH
6	B SIZE	24	VBAT
7	BA11	25	$\overline{BA6}$
8	$\overline{6/16}$	26	$\overline{MWRB}$
9	$\overline{MRD}$	27	TPAB
10	BA0	28	DB4
11	BA10	29	DB5
12	BA7	30	DB6
13	BA1	31	DB7
14	BA2	32	DB0
15	BA3	33	DB1
16	BA4	34	DB2
17	BA5	35	DB3
18	GND	36	5V

Definition of Symbols

$\overline{MWB}$	Memory Write (Active Low)
$\overline{CLR}$	System Clear
$\overline{RRB}$	Memory Module Address Range Accessed (Active Low) 32K Block
$\overline{AD13}$	Address 13 Line (Active Low)
$\overline{6/16}$	Indicates size type
B SIZE	Indicates type of Memory Module insert
$\overline{MRD}$	Memory Read (Active Low)
BA0–BA11	Buffered Address Lines
V Test	Battery Test Voltage Line
VB	3 Volt Battery Backup Power Line
BLK	Indicator Set Line
WH	Indicator Reset Line
VDD	5 Volt Power Line
GND	0 Volt Power Line
DB0–DB7	Data Lines
TPAB	Timing Pulse

Copyright National Electrical Manufacturers Association
Provided by IHS under license with NEMA
No reproduction or networking permitted without license from IHS
Not for Resale

1	2	3	4	5	6	7	8	9	10	11	12	13	14
X	X	X	X	X	YA	ZA	YB	ZB	YC	ZC	YD	ZD	K

X = Space for Additional Terminal

Appendix D-1
TYPE SS1 RECORDER TERMINAL DESIGNATIONS

1	2	3	4	5	6	7	8	9	10	11	12	13	14
OV	E1	K	YA	ZA	YB	ZB	YC	ZC	YD	ZD	T1	T0	K

Appendix D-2
TYPE SS2 RECORDER TERMINAL DESIGNATIONS

1	2	3	4	5	6	7	8	9	10	11	12	13	14
V	V	K	Y_A	Z_A	Y_B	Z_B	X	X	X	X	X	X	X

X = Space for Additional Terminal

Appendix D-3
TYPE SS3 RECORDER TERMINAL DESIGNATIONS

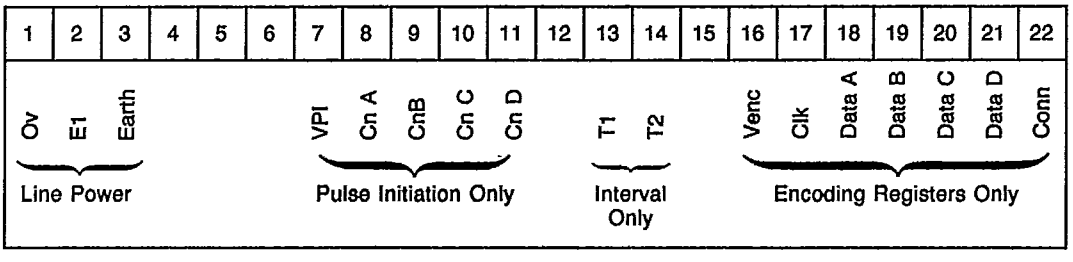

Appendix D-4
TYPE SS4 RECORDER TERMINAL DESIGNATIONS

Copyright National Electrical Manufacturers Association
Provided by IHS under license with NEMA
No reproduction or networking permitted without license from IHS
Not for Resale

1	2	3	4	5	6	7	8	9	10	11	12	13	14
GND	AC	AC	AC	AC	K	Y_1	Z_1	Y_2	$\overline{Z_2}$	$\overline{Y_3}$	$\overline{Z_3}$	$\overline{Y_4}$	$\overline{Z_4}$

GND GROUND

Appendix D-5
TYPE SS5 RECORDER TERMINAL DESIGNATIONS

Top Connector

1	2	3	4	5	6	7	8	9	10	11
D OUT	C OUT	B OUT	A OUT	COMMON	SYNC IN	SYNC OUT	X	N	LN	GND

Bottom Connector

1	2	3	4	5	6	7	8	9	10	11
X	K	DZ	DY	CZ	CY	BZ	BY	AZ	AY	K

X = Space for Additional Terminals

Appendix D-6
TYPE SS6 RECORDER TERMINAL DESIGNATIONS

Copyright National Electrical Manufacturers Association
Provided by IHS under license with NEMA
No reproduction or networking permitted without license from IHS
Not for Resale

NEMA STANDARDIZATION

The purpose of NEMA Standards, their classification and status are set forth in certain clauses of the NEMA Bylaws, which are quoted below:

Purpose of Standards

National Electrical Manufacturers Association Standards are adopted in the public interest and are designed to eliminate misunderstandings between the manufacturer and the purchaser and to assist the purchaser in selecting and obtaining the proper product for its particular need. Existence of a National Electrical Manufacturers Association Standard does not in any respect preclude any member or nonmember from manufacturing or selling products not conforming to the standard.

(Bylaw—Art. V, Sec. 1)

Definition of a Standard

A standard of the National Electrical Manufacturers Association defines a product, process or procedure with reference to one or more of the following: nomenclature, composition, construction, dimensions, tolerances, safety, operating characteristics, performance, rating, testing, and the service for which they are designed.

(Bylaw—Art. V, Sec. 2, Subsection A)

Dimensions

Where dimensions are given for interchangeability purposes, alternate dimensions satisfying the other provisions of the standards publication may be capable of otherwise equivalent performance.

(NEMA Policy Memorandum 84-2, dated June 7, 1984)

Classes of Standards

National Electrical Manufacturers Association Standards are of two classes:

1. NEMA Standard, which relates to a product commercially standardized and subject to repetitive manufacture, which standard has been approved by at least 90 percent of the members of the Subdivision eligible to vote thereon;
2. Suggested Standard for Future Design, which may not have been regularly applied to a commercial product, but which suggests a sound engineering approach to future development, which standard has been approved by at least two-thirds of the members of the Subdivision eligible to vote thereon.

(Bylaw—Art. V, Sec. 2, Subsection B)

Authorized Engineering Information

Authorized Engineering Information consists of explanatory data and other engineering information of an informative character not falling within the classification of NEMA Standard or Suggested Standard for Future Design.

(Bylaw—Art. V, Sec. 6, 1st Sentence)

Official Standards Proposal

An Official Standards Proposal is an official draft of a proposed standard which is formally recommended to an outside organization(s) for consideration, comment and/or approval.

(Bylaw—Art. V, Sec. 4, Subsection A)

Identification of Status

Standards in NEMA Standards Publications are identified in the foreword or following each standard as "NEMA Standard" or "Suggested Standard for Future Design." These indicate the status of the standard. These words are followed by a date which indicates when the standard was adopted in its present form by the Association.

The material identified as "Authorized Engineering Information" and "Official Standards Proposal" is designated similarly.

Copyright National Electrical Manufacturers Association
Provided by IHS under license with NEMA
No reproduction or networking permitted without license from IHS
Not for Resale

ELECTRICITY METERING GROUP

OF THE

ELECTRICAL MEASURING EQUIPMENT SECTION

MEMBER COMPANIES

Duncan Electric Co., Inc.
Lafayette, IN 47903

EIL Instruments, Inc.
Sparks, MD 21152

Electronic Modules Corp.
Sparks, MD 21152

General Electric Co.
Somersworth, NH 03878

Novatech Corp.
Broomfield, CO 80020

Rockwell International
Richardson, TX 75081

Sangamo Energy Management Div.
Sangamo Weston Schumberger
Atlanta, GA 30362

Scientific Columbus, Inc.
Columbus, OH 43228

Trans Data, Inc.
Minneapolis, MN 55344

Westinghouse Electric Corp.
Raleigh, NC 27611

Copyright National Electrical Manufacturers Association
Provided by IHS under license with NEMA
No reproduction or networking permitted without license from IHS
Not for Resale