NEMA EI*21.2 91 ■ 6470247 0500724 1 ■

STANDARDS PUBLICATION NO. EI 21.2

nema

Instrument Transformers for Revenue Metering (125 kV BIL through 350 kV BIL)

NEMA

NATIONAL ELECTRICAL MANUFACTURERS ASSOCIATION ■ 2101 L STREET, N.W., WASHINGTON, D.C. 20037

Copyright National Electrical Manufacturers Association
Provided by IHS under license with NEMA
No reproduction or networking permitted without license from IHS

Not for Resale

NEMA EI*21.2 91 ■ 6470247 0500725 3 ■

NEMA EI 21.2-1991

EI 21.2

INSTRUMENT TRANSFORMERS FOR REVENUE METERING (125 kV BIL THROUGH 350 kV BIL)

Published by

National Electric Manufacturers Association
2101 L Street, N.W., Suite 300
Washington, D.C. 20037

© 1992 by National Electrical Manufacturers Association

Copyright National Electrical Manufacturers Association
Provided by IHS under license with NEMA
No reproduction or networking permitted without license from IHS
Not for Resale

TABLE OF CONTENTS

		Page
	FOREWORD	i
	SCOPE	ii
Section 1	CURRENT TRANSFORMERS	1
	General Requirements	1
	Definitions	1
	Standard Ratings	1
	Nameplate	2
	Polarity Marking of Terminals	2
	Primary Current Identification	2
	Test Card	2
	Terminals	4
	Space for User Identification Number	4
	Mechanical Construction	4
	Small-Size Outdoor Current Transformers 125 kV BIL through 200 kV BIL	4
	Large-Size Outdoor Current Transformers 150 kV BIL through 350 kV BIL	4
Section 2	VOLTAGE TRANSFORMERS	9
	General Requirements	9
	Definitions	9
	Standard Ratings	9
	Nameplate	9
	Polarity Marking of Terminals	11
	Primary Voltage Identification	11
	Test Card	11
	Terminals	11
	Space for User Identification Number	12
	Small-Size Outdoor Voltage Transformers 125 kV BIL through 200 kV BIL	12
	Large-Size Outdoor Voltage Transformers 150 kV BIL through 350 kV BIL	12
APPENDIX A	Circle Method for Determination of Voltage Transformer Accuracy	17
FIGURES		
Figure 1-1	0.3 Accuracy Class Limits for Current Transformers	3
Figure 1-2	Small-Size Outdoor Current Transformers 125 kV BIL through 200 kV BIL	5
Figure 1-3	Large-Size Outdoor Current Transformers 150 kV BIL through 350 kV BIL	6

Copyright National Electrical Manufacturers Association
Provided by IHS under license with NEMA
No reproduction or networking permitted without license from IHS
Not for Resale

TABLE OF CONTENTS (Continued)

Figure 1-4	Primary Terminal Dimensions for Large Size Outdoor Current Transformers, 150 kV BIL through 350 kV BIL	7
Figure 2-1	0.3 Accuracy Class Limits for Voltage Transformers	10
Figure 2-2	Small-Size Outdoor Voltage Transformers 150 kV BIL through 200 kV BIL, One Bushing Type 10	13
Figure 2-3	Small-Size Outdoor Voltage Transformers 125 kV BIL through 200 kV BIL, Two Bushing Type	14
Figure 2-4	Large-Size Outdoor Voltage Transformers, 150 kV BIL through 350 kV BIL, One Bushing Type	15
Figure 2-5	Large-Size Outdoor Voltage Transformers, 150 kV BIL through 350 kV BIL, Two Bushing Type	16
Figure A-1	Circle Method for Determination of Voltage Transformer Accuracy	17
Figure A-2	Sample of Graph Paper Specifically Scaled for Voltage Transformer	18

TABLES

Table 1-1	Standard Metering Burdens for Current Transformers with 5 Ampere Secondaries	2
Table 1-2	Standard Accuracy Class for Current Transformers	2
Table 2-1	Standard Burdens for Voltage Transformers	11
Table 2-2	Standard Accuracy Class for Voltage Transformers	11

Copyright National Electrical Manufacturers Association
Provided by IHS under license with NEMA
No reproduction or networking permitted without license from IHS
Not for Resale

Foreword

These standards are made available for the manufacturer and for the purchaser in order to assist them in selecting and obtaining a suitable product. The use of these standards is at the option of the individual manufacturer and purchaser. It is anticipated that those who utilize them will derive benefits of functional interchangeability.

To assure a meaningful publication, copies were sent during the draft stage to a number of typical individuals and organizations in the public and private sectors having an interest in or responsibility for the purchase, testing, application, use, or inspection of this product category. The resulting comments and suggestions provided a vital user and general interest input prior to final NEMA approval and resulted in a number of substantive changes being made in this publication.

As future major revisions to this publication are proposed, the same or similar individuals or organizations will be offered a further opportunity to participate in the development of this publication.

Proposed or recommended revisions should be submitted to:

Vice President, Engineering
National Electrical Manufacturers Association
2101 L Street, N.W., Suite 300
Washington, D.C. 20037

Copyright National Electrical Manufacturers Association
Provided by IHS under license with NEMA
No reproduction or networking permitted without license from IHS
Not for Resale

Scope

These standards cover general requirements, ratings, accuracy classifications, burdens and pertinent dimensions applicable to instrument current and voltage transformers for revenue metering rated 125 kV BIL through 350 kV BIL.

The values stated in U.S. customary units shall be regarded as the standard. For purposes of this Standards Publication, metric values of length (in millimeters) shall be determined by multiplying the U.S. customary units (in inches) by 25.4 and rounding off to the nearest .02 millimeter.

Copyright National Electrical Manufacturers Association
Provided by IHS under license with NEMA
No reproduction or networking permitted without license from IHS
Not for Resale

INSTRUMENT TRANSFORMERS FOR REVENUE METERING (125 kV BIL THROUGH 350 kV BIL)

Section 1
CURRENT TRANSFORMERS

1.1 GENERAL REQUIREMENTS

Current transformers shall meet the applicable provisions of the American National Standard for Instrument Transformers, ANSI/IEEE C57.13-1978 (R1987)*, in addition to the provisions contained in this NEMA Standards Publication.

NEMA Standard 8-28-1991

1.2 DEFINITIONS

All definitions, except as specifically covered in this standard, shall be in accordance with ANSI/IEEE C57.13-1978 (R1987).

1.2.1 Accuracy Classes for Metering (Current Transformers)

Accuracy classes for metering are the limits of a transformer correction factor, in terms of percent error, that have been established to cover specific performance ranges for line power-factor conditions between 1.0 and 0.6 lag.

1.2.2 Basic Lightning Impulse Insulation Levels (BIL)

Basic lightning impulse insulation levels is a specific insulation level expressed in kilovolts of the crest value of a standard lightning impulse (1.2 × 50 microsecond wave).

1.2.3 Burden

The burden of a current transformer is that property of the circuit connected to its secondary winding which determines the active and reactive power at the secondary terminals. The burden is expressed either as the total ohms impedance with the effective resistive and reactive components, or as the total voltamperes and power factor at the specified value of current and frequency.

1.2.4 Continuous-Thermal-Current Rating Factor (Current Rating Factor) (RF)

The continuous-thermal-current rating factor is the factor by which the rated primary current can be multiplied to obtain the maximum primary current that can be carried continuously without exceeding the limiting temperature rise from 30°C ambient air temperature.

1.2.5 Current Transformer

A current transformer is an instrument transformer intended to have its primary winding connected in series with the conductor carrying the current to be measured or controlled.

NEMA Standard 8-28-1991

1.2.6 Outdoor Current Transformer

An outdoor current transformer is a current transformer which is constructed for installation outdoors where it is exposed to the weather.

For explanation of usual and unusual service conditions, see ANSI/IEEE C57.13-1978 (R1987).

1.2.7 Primary Winding

The primary winding of a current transformer is the winding intended to be on the energy input side.

1.2.8 Secondary Winding

The secondary winding of a current transformer is the winding intended to be connected to the measuring or control devices.

NEMA Standard 8-28-1991

1.3 STANDARD RATINGS

1. The frequency rating shall be 60 hertz.
2. The standard accuracy class for current transformers and the corresponding limits of transformer correction factor shall be as shown in Table 1-1. The relationship between the limits of ratio correction factors and phase angles for the limiting values of transformer correction factors is shown in Figure 1-1.
3. The standard metering burdens shall be as shown in Table 1-2.
4. The standard continuous-thermal-current rating factor for a current transformer shall be 1.0, 1.33, 1.5, 2.0, 3.0 or 4.0.

NEMA Standard 8-28-1991

*May be obtained from the Institute of Electrical and Electronics Engineers Inc., 445 Hoes Lane, Piscataway, N.J, 08855-1331

Copyright National Electrical Manufacturers Association
Provided by IHS under license with NEMA
No reproduction or networking permitted without license from IHS
Not for Resale

Table 1-1
Standard Accuracy Class for Current Transformers

Accuracy Class	Limits of Transformer 100% Rated Current*		Correction Factor 10% Rated Current		Limits of Power Factor (Lagging) of Metered Power Load
	Minimum	Maximum	Minimum	Maximum	
0.3	0.997	1.003	0.994	1.006	0.6 - 1.0

*These limits also apply at the maximum continuous current (continuous-current rating factor multiplied by the rated primary current).

Authorized Engineering Information 8-28-1991

Table 1-2
Standard Metering Burdens for Current Transformers With 5 Ampere Secondaries*

Standard Burden Designation**	Resistance Ohms	Inductance, Millihenrys	Impedance, Ohms	Volt-Amperes (at 5 amps)	Power Factor
B-0.1	0.09	0.116	0.1	2.5	0.9
B-0.2	0.18	0.232	0.2	5.0	0.9
B-0.5	0.45	0.580	0.5	12.5	0.9
B-0.9	0.81	1.04	0.9	22.5	0.9
B-1.8	1.62	2.08	1.8	45	0.9

* If a current transformer is rated at other than 5 amperes, ohmic burdens for specification and rating may be derived by multiplying the resistance and inductance of the table by $[5/(\text{ampere rating})]^2$, the VA at rated current and the power factor remaining the same.

** These standard burden designations have no significance at frequencies other than 60 Hz.

Authorized Engineering Information 8-28-1991

1.4 NAMEPLATE

Current transformers shall be provided with nameplates which will include, as a minimum, the following information:

1. Manufacturer's name or trademark;
2. Manufacturer's type;
3. Manufacturer's serial number (SER), numerals only;
4. Rated primary and secondary amperes;
5. Nominal system voltage (NSV);
6. Basic lightning impulse insulation level (BIL___kV);
7. Rated frequency (Hz);
8. Current rating factor (RF); and,
9. Accuracy ratings (standard burdens at which the transformer meets 0.3 accuracy class).

NEMA Standard 8-28-1991

1.5 POLARITY MARKING OF TERMINALS

The relative instantaneous polarity of the primary and secondary terminals or leads shall be clearly indicated by permanent markings that cannot be obliterated easily. When the polarity is indicated by letters, the letter H shall be used to indicate the primary terminals and the letter X shall be used to indicate the secondary terminals. H1 and X1 shall be of the same polarity.

When two primary windings are provided, the primary terminals shall be designated H1, H2, H3 and H4. H1 and H3 shall be of the same polarity.

When a tap is provided on the secondary winding, the terminals shall be designated X1, X2 and X3. X1 and X3 shall designate the full winding. When X1 is not in use, X2 shall be the same polarity as H1.

NEMA Standard 8-28-1991

1.6 PRIMARY CURRENT IDENTIFICATION

The rated primary current shall be prominently identified, so that the identification cannot be obliterated easily.

NEMA Standard 8-28-1991

1.7 TEST CARD

Current transformers shall be provided with a certificate of test, approximately 3 × 5 inches in dimension, which shall include the following minimum information:

1. Manufacturer's name or trademark;
2. Manufacturer's name type;
3. Manufacturer's serial number;
4. Space for user identification number;
5. Rated primary and secondary amperes;
6. Factory accuracy test readings at 100 percent and 10 percent of rated primary current at the maximum standard burden for 0.3 accuracy class;

Copyright National Electrical Manufacturers Association
Provided by IHS under license with NEMA
No reproduction or networking permitted without license from IHS

Not for Resale

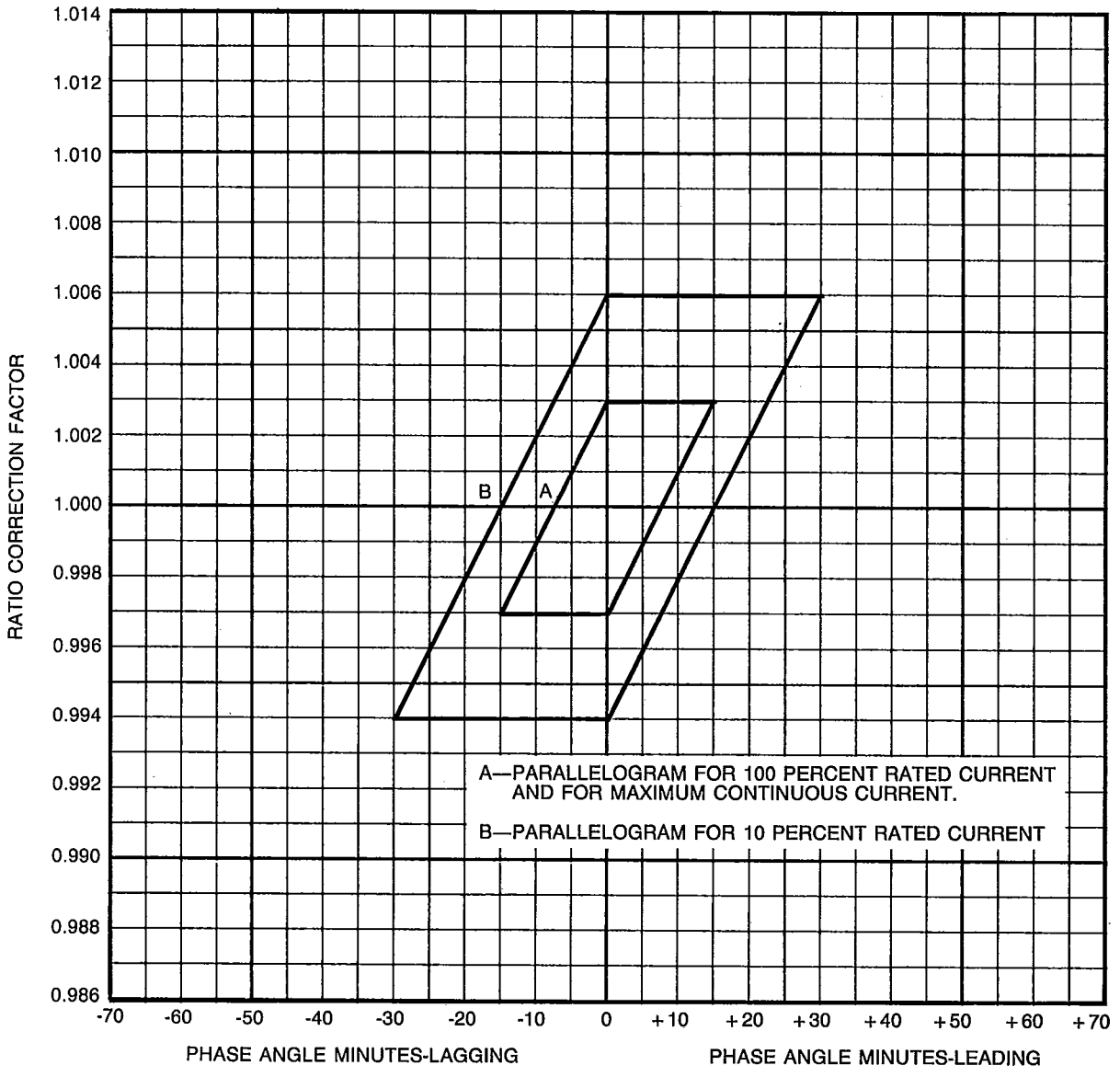

Figure 1-1
0.3 Accuracy Class Limits For Current Transformers

Copyright National Electrical Manufacturers Association
Provided by IHS under license with NEMA
No reproduction or networking permitted without license from IHS
Not for Resale

7. Date of factory accuracy test; and,
8. Initials of factory accuracy tester (unless tested automatically).

NEMA Standard 8-28-1991

1.8 TERMINALS

1.8.1 Primary Terminals

Primary terminals of wound and bar-type current transformers shall be electrically and mechanically suitable for use with either copper or aluminum.

1.8.2 Secondary Terminals

Secondary terminals shall be electrically and mechanically suitable for use with copper stranded or solid conductors from No. 14 to No. 8 AWG.

NEMA Standard 8-28-1991

1.9 SPACE FOR USER IDENTIFICATION NUMBER

A space 2 to 2-3/4 inches long shall be provided for holding a 1/2-inch wide badge or for marking the user identification number.

NEMA Standard 8-28-1991

1.10 MECHANICAL CONSTRUCTION

Current transformers covered by this standard shall be of the wound or bar type construction.

NEMA Standard 8-28-1991

1.11 SMALL SIZE OUTDOOR CURRENT TRANSFORMERS 125 kV BIL THROUGH 200 kV BIL

1.11.1 Electrical Characteristics and Dimensions

Minimum electrical characteristics, dimensions, and maximum envelope, including the base, body, secondary terminal covers and secondary conduit boxes, shall be as shown in Figure 1-2.

NEMA Standard 8-28-1991

1.11.2 Current Ratings (Small Size Outdoor Current Transformer)

The current ratings (in amperes) shall be:

Single Ratio	Double Ratio With Taps In Secondary Winding
10:5	25/ 50:5
15:5	50/100:5
25:5	75/150:5
40:5	100/200:5
50:5	200/400:5
75:5	300/600:5
100:5	400/800:5
150:5	...
200:5	...
300:5	...
400:5	...
600:5	...
800:5	...

1.12 LARGE-SIZE OUTDOOR CURRENT TRANSFORMERS 150 kV BIL THROUGH 350 kV BIL

1.12.1 Electrical Characteristics and Dimensions

Minimum electrical characteristics, dimensions, and maximum envelope, including the base, body, secondary terminal covers and secondary conduit boxes, shall be as shown in Figures 1-3 and 1-4.

NEMA Standard 8-28-1991

1.12.2 Current Ratings (Large Size Outdoor Current Transformer)

The current ratings (in amperes) shall be as follows:

Double Ratio Transformers	
With Series Parallel Primary Winding	With Taps In Secondary Winding
25 × 50:5	25/ 50:5
50 × 100:5	50/ 100:5
75 × 150:5	100/ 200:5
100 × 200:5	200/ 400:5
200 × 400:5	400/ 800:5
300 × 600:5	1000/2000:5
400 × 800:5	1500/3000:5
600 × 1200:5	

NEMA Standard 8-28-1991

Copyright National Electrical Manufacturers Association
Provided by IHS under license with NEMA
No reproduction or networking permitted without license from IHS

Not for Resale

MINIMUM ELECTRICAL CHARACTERISTICS

CURRENT RATING, AMPERES	CURRENT RATING FACTOR	ACCURACY CLASS AND BURDEN		
		B0.1	B0.2	B0.5
10:5 thru 400:5	1.5	0.3	0.3	0.3
600:5	1.33	0.3	0.3	0.3
800:5	1.0	0.3	0.3	0.3
25/50:5 thru 200/400:5	1.5*	0.3	0.3	0.3*
300/600:5	1.33*	0.3	0.3	0.3*
400/800:5	1.0*	0.3	0.3	0.3*

*On tapped secondaries applies to higher ratio only

DIMENSIONS

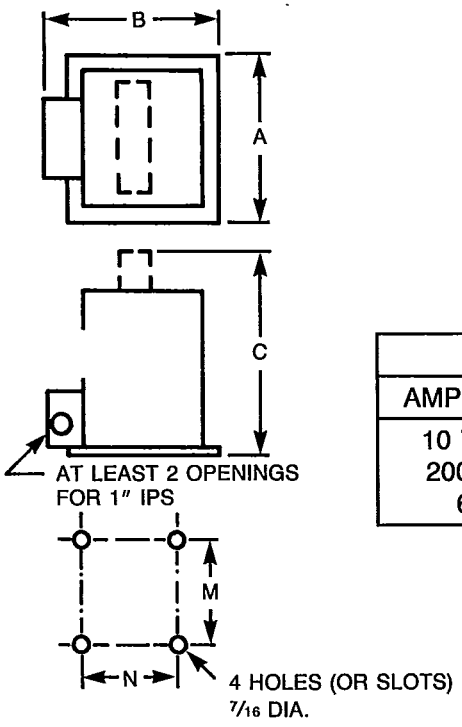

PRIMARY TERMINAL DIMENSIONS		
AMPERE RATING	MIN. WIDTH	MIN. THICKNESS
10 Through 150	1 1/2	3/16
200,300, & 400	2	1/4
600 & 800	2	3/8

BIL kV	NSV kV	MAX. OVERALL DIMENSIONS			MOUNTING DIMENSIONS	
		A	B	C	M	N
125	25	12	17	18	10	8 5/8
150	25	12	17	18	10	8 5/8
150	34.5	12	17	21	10	8 5/8
200	34.5	12	17	21	10	8 5/8

ALL DIMENSIONS IN INCHES—TOLERANCES ON DIAMETERS OF HOLES, SLOT AND KEYHOLES ARE PLUS OR MINUS 1/32 INCH
—UNLESS OTHERWISE INDICATED OTHER TOLERANCES ARE PLUS OR MINUS 1/16 INCH

Figure 1-2
Small-Size Outdoor Current Transformers
125 kV BIL Through 200 kV BIL

Copyright National Electrical Manufacturers Association
Provided by IHS under license with NEMA
No reproduction or networking permitted without license from IHS
Not for Resale

MINIMUM ELECTRICAL CHARACTERISTICS

PRIMARY RATING AMPERES	CURRENT RATING FACTOR	ACCURACY CLASS AND BURDEN				
		B0.1	B0.2	B0.5	B0.9	B1.8
25/50 thru 1500/3000	1.0/1.0	0.3	0.3	0.3*	0.3	*0.3
25 x 50 thru 600 x 1200	1.0 x 1.0	0.3	0.3	0.3	0.3	0.3

*Higher Ratio Only

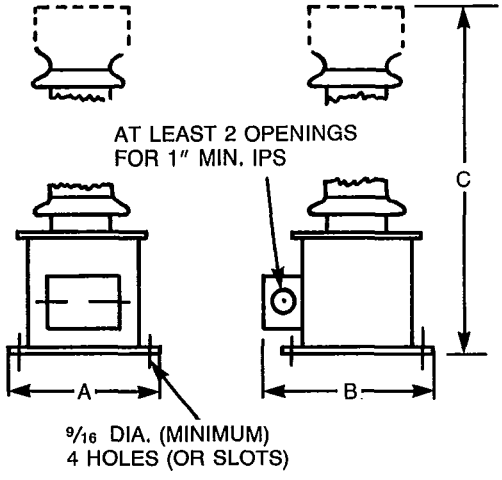

BIL	NSV	MAX. OVERALL DIMENSIONS		
kV	kV	A	B	C
150	25	24	26	48
200	34.5	24	26	51
250	46	26	38	60
350	69	26	38	66

ALL DIMENSIONS IN INCHES—TOLERANCES ON DIAMETERS OF HOLES AND SLOTS
ARE PLUS OR MINUS 1/32 INCH
—UNLESS OTHERWISE INDICATED OTHER TOLERANCES
ARE PLUS OR MINUS 1/16 INCH

Figure 1-3
Large-Size Outdoor Current Transformers 150 kV BIL Through 350 kV BIL

Copyright National Electrical Manufacturers Association
Provided by IHS under license with NEMA
No reproduction or networking permitted without license from IHS
Not for Resale

PRIMARY TERMINALS

PRI AMPS	DETAIL	NO. OF BARS	MIN T
25 x 50 TO 200 x 400 25/50 TO 200/400	B	1	3/16
25 x 50 TO 400 x 800 25/50 TO 400/800	A	1	3/16
600 x 1200 600/1200	A	1 or 2	1/4
1000/2000	A	2	1/4
1500/3000	C	3	1/4

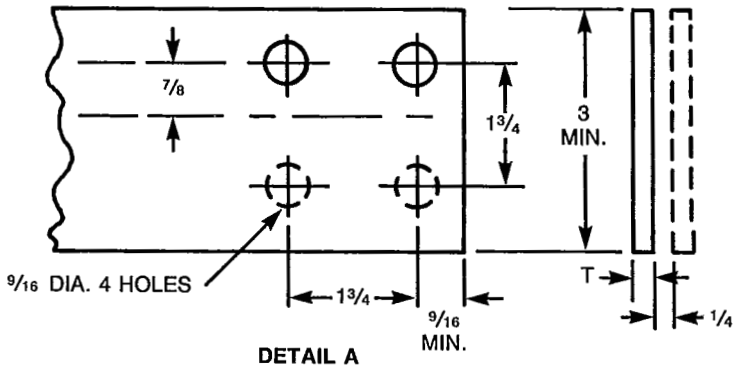

DETAIL A

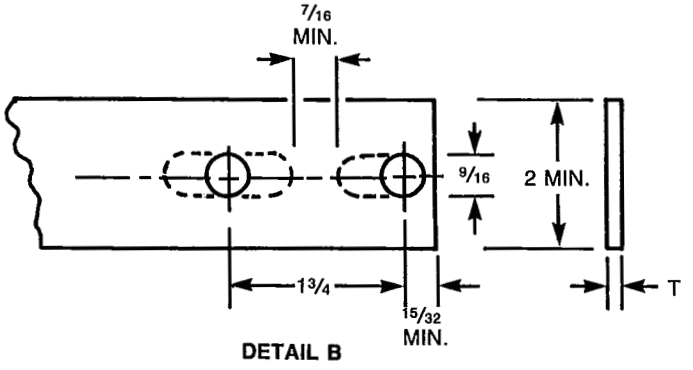

DETAIL B

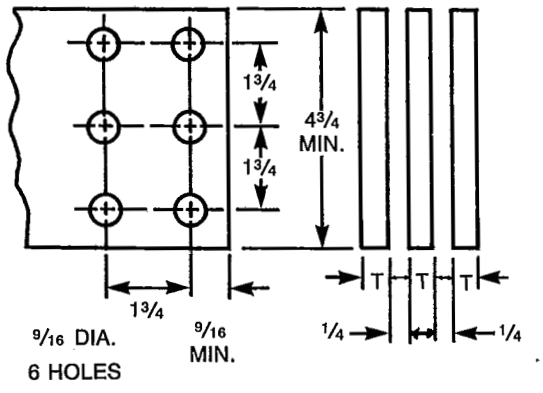

DETAIL C

ALL DIMENSIONS IN INCHES—TOLERANCES ON DIAMETERS OF HOLES AND SLOTS ARE PLUS OR MINUS 1/32 INCH
—UNLESS OTHERWISE INDICATED OTHER TOLERANCES ARE PLUS OR MINUS 1/16 INCH

Figure 1-4
Primary Terminal Dimensions for Large Size Outdoor Current Transformers 150 kV BIL through 350 kV BIL

Copyright National Electrical Manufacturers Association
Provided by IHS under license with NEMA
No reproduction or networking permitted without license from IHS
Not for Resale

Copyright National Electrical Manufacturers Association
Provided by IHS under license with NEMA
No reproduction or networking permitted without license from IHS

Not for Resale

Section 2
VOLTAGE TRANSFORMERS

2.1 GENERAL REQUIREMENTS

Voltage transformers shall meet the provisions of the American National Standard for Instrument Transformers, ANSI/IEEE C57.13-1978 (R1987), in addition to the provisions contained in this NEMA Standards Publication.

NEMA Standard 8-28-1991

2.2 DEFINITIONS

All definitions, except as specifically covered in this standard, shall be in accordance with ANSI/IEEE C57.13-1978 (R1987).

2.2.1 Accuracy Classes for Metering (Voltage Transformers)

Accuracy classes for metering are the limits of a transformer correction factor, in terms of percent error, that have been established to cover specific performance ranges for line power-factor conditions between 1.0 and 0.6 lag.

2.2.2 Basic Lightning Impulse Insulation Levels (BIL)

Basic lightning impulse insulation levels is a specific insulation level expressed in kilovolts of the crest value of a standard lightning impulse (1.2 × 50 microsecond wave).

2.2.3 Burden

The burden of a voltage transformer is that property of the circuit connected to its secondary winding which determines the active and reactive power at its secondary terminals. The burden is expressed in total ohms impedance, with the effective resistive and reactive components, or as the total volt-amperes and power factor at the specified value of voltage and frequency.

2.2.4 Voltage Transformers

A voltage transformer is an instrument transformer which has its primary winding connected in shunt with a measured or controlled power supply circuit.

2.2.5 Outdoor Voltage Transformer

An outdoor voltage transformer is a voltage transformer which is constructed for installation outdoors where it is exposed to the weather.

For explanation of usual and unusual service conditions, see ANSI/IEEE C57.13-1978 (R1987).

2.2.6 Primary Winding

The primary winding of a voltage transformer is the winding intended to be on the energy input side.

2.2.7 Secondary Winding

The secondary winding of a voltage transformer is the winding intended to be connected to the measuring or control devices.

2.2.8 Thermal Burden Rating

The thermal burden rating of a voltage transformer is the volt-amperes output that the transformer will supply continuously at rated secondary voltage without causing the specified temperature limitations to be exceeded. (See ANSI/IEEE C57.13-1978 (R1987), Section 7.4).

NEMA Standard 8-28-1991

2.3 STANDARD RATINGS

1. Voltage transformers shall have a frequency rating of 60 Hz.
2. The standard accuracy class for voltage transformers and the corresponding limits of transformer correction factor shall be as shown in Table 2-1. The relationship between the limits of ratio correction factor and phase angles for the limiting values of transformer correction factors is shown in Fig. 2-1.
3. Standard burdens for accuracy rating purposes shall be based on 120 volts and 69.3 volts and shall have constant resistance and induction over the entire voltage range for which they are used. The standard burdens shall be as shown in Table 2-2.

NEMA Standard 8-28-1991

2.4 NAMEPLATE

Voltage transformers shall be provided with nameplates which shall include, as a minimum, the following information:

1. Manufacturer's name or trade mark;
2. Manufacturer's type;
3. Manufacturer's serial number (SER) (numerals only);
4. Rated primary voltage (PRI);
5. Ratio or ratios;
6. Basic lightning impulse insulation level (BIL___kV);
7. Rated frequency (Hz);
8. Thermal burden rating or ratings at ambient temperature or temperatures (___VA at___°C AMB); and,
9. Accuracy Rating (Standard Burdens at which the Transformer meets 0.3 Accuracy Class).

NEMA Standard 8-28-1991

Copyright National Electrical Manufacturers Association
Provided by IHS under license with NEMA
No reproduction or networking permitted without license from IHS
Not for Resale

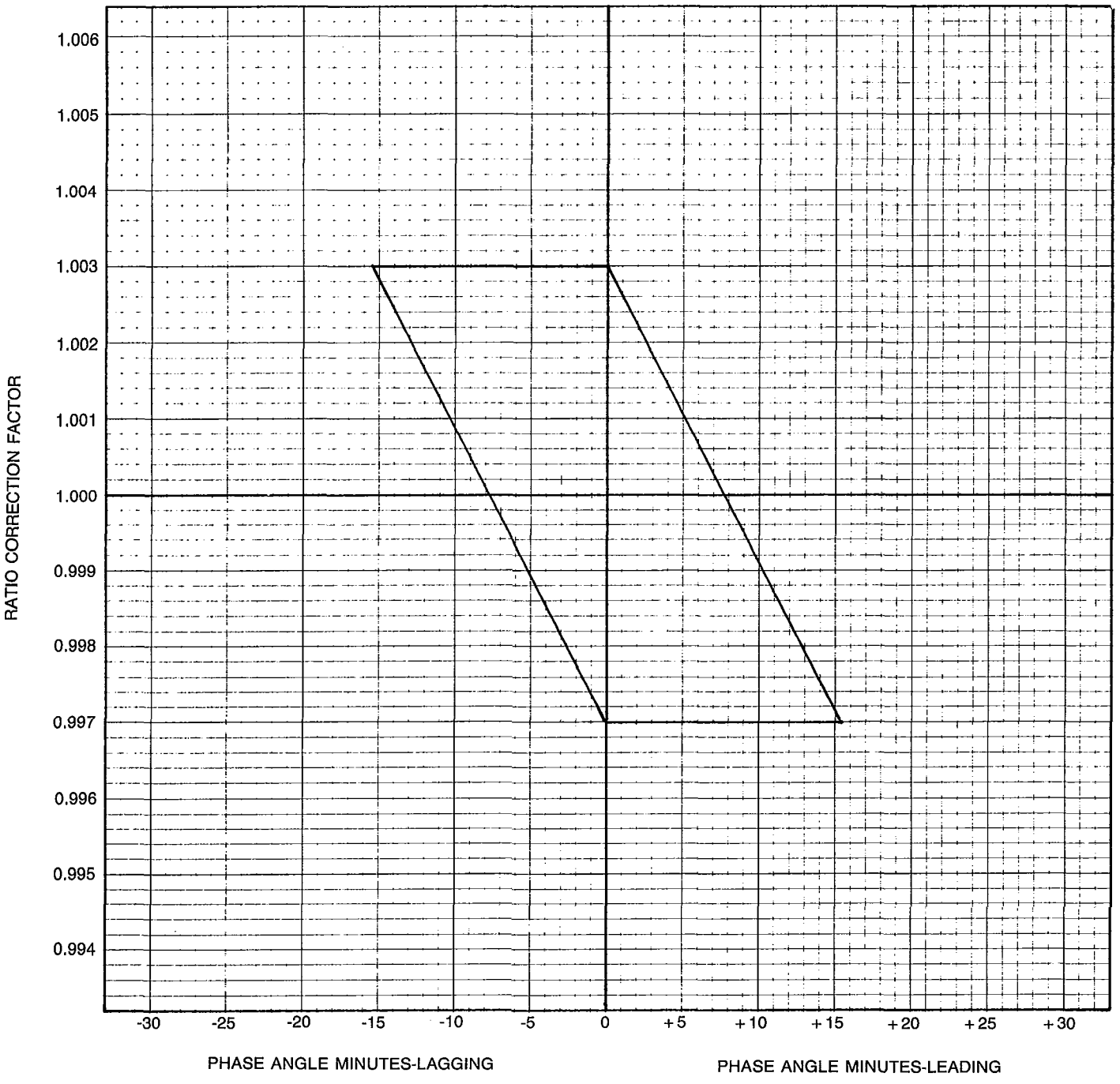

Figure 2-1
0.3 Accuracy Class Limits For Voltage Transformers

Copyright National Electrical Manufacturers Association
Provided by IHS under license with NEMA
No reproduction or networking permitted without license from IHS
Not for Resale

Table 2-1
Standard Accuracy Class For Voltage Transformers

Accuracy Class	Limits of Transformer Correction Factor	Limits of Power Factor (Lagging) of Metered Power Load
0.3	0.997 - 1.003	0.6-1.0

Table 2-2
Standard Burdens for Voltage Transformers

Standard Burdens			Characteristics on 120 Volt Basis			Characteristics on 69.3 Volt Basis		
Designation*	Volt Amperes	Power Factor	Resistance Ohms	Inductance Henrys	Impedance Ohms	Resistance Ohms	Inductance Henrys	Impedance Ohms
W	12.5	0.10	115.2	3.04	1152	38.4	1.01	384
X	25	0.70	403.2	1.09	576	134.4	0.364	192
M	35	0.20	82.3	0.07	411	27.4	0.356	137
Y	75	0.85	163.2	0.268	192	54.4	0.0894	64
Z	200	0.85	61.2	0.101	72	20.4	0.0335	24
ZZ	400	0.85	30.6	0.0503	36	10.4	0.0168	12

* These burden designations have no significance except at 60Hz.

Authorized Engineering Information 8-28-1991

2.5 POLARITY MARKING OF TERMINALS

The relative instantaneous polarity of the primary and secondary terminals shall be clearly indicated by permanent markings that cannot be obliterated easily.

When the polarity is indicated by letters, the letter H shall be used to indicate the primary terminals and the letter X (also Y if two secondary windings are provided) shall be used to designate the secondary terminals. H1 and X1 (also Y1 if provided) shall be of the same polarity.

When a tap is provided on the secondary winding, the terminals shall be designated X1, X2, X3 or Y1, Y2, Y3, the lowest and highest numbers indicating the full windings. When X1 (or Y1) is not in use, X2 (or Y2) shall have the same polarity as H1.

NEMA Standard 8-28-1991

2.6 PRIMARY VOLTAGE IDENTIFICATION

The rated primary voltage shall be prominently identified in such a manner that it cannot be obliterated easily.

NEMA Standard 8-28-1991

2.7 TEST CARD

Voltage transformers shall be provided with a certificate of test, approximately 3 × 5 inches in dimension, which shall include the following minimum information:

1. Manufacturer's name and trademark;
2. Manufacturer's type;
3. Manufacturer's serial number;
4. Space for user identification number;
5. Rated primary and secondary volts, rated primary volts and ratio to one, or rated secondary volts and ratio to one;
6. Factory accuracy test readings at 100 percent rated primary voltage with zero burden and the maximum standard burden for 0.3 accuracy class;
7. Date of factory accuracy test; and,
8. Initials of factory accuracy tester (unless tested automatically).

NEMA Standard 8-28-1991

2.8 TERMINALS

2.8.1 Primary Terminals

Primary terminals shall be electrically and mechanically suitable for use with either copper or aluminum. When clamp-type adapters are provided, they shall be suitable for stranded or solid conductors from No. 6 AWG to 250 MCM.

NEMA Standard 8-28-1991

Copyright National Electrical Manufacturers Association
Provided by IHS under license with NEMA
No reproduction or networking permitted without license from IHS
Not for Resale

2.8.2 Secondary Terminals

Secondary terminals shall be electrically and mechanically suitable for use with copper stranded or solid conductors from No. 14 to No. 8 AWG.

NEMA Standard 8-28-1991

2.9 SPACE FOR USER IDENTIFICATION NUMBER

A space 2 to 2-3/4 inches long shall be provided for holding a 1/2-inch wide badge or for marking the user identification number.

NEMA Standard 8-28-1991

2.10 SMALL-SIZE OUTDOOR VOLTAGE TRANSFORMERS, 125 kV BIL THROUGH 200 kV BIL

2.10.1 Electrical Characteristics and Dimensions-One Bushing*

Minimum electrical characteristics, dimensions, and maximum envelope, including the base, body, secondary terminal covers and secondary conduit boxes, shall be as shown in Figure 2-2.

2.10.2 Electrical Characteristics and Dimensions-Two Bushings*

Minimum electrical characteristics, dimensions, and maximum envelope, including the base, body, secondary terminal covers and secondary conduit boxes, shall be as shown in Figure 2-3.

NEMA Standard 8-28-1991

2.11 LARGE SIZE OUTDOOR VOLTAGE TRANSFORMERS, 150 kV BIL THROUGH 350 kV BIL

2.11.1 Electrical Characteristics and Dimensions-One Bushing*

Minimum electrical characteristics, dimensions, and maximum envelope, including the base, body, ground clamp (when provided), secondary terminal covers and secondary conduit boxes, shall be as shown in Figure 2-4.

2.11.2 Electrical Characteristics and Dimensions-Two Bushings*

Minimum electrical characteristics, dimensions, and maximum envelope, including the base, body, ground clamp (when provided), secondary terminal covers and secondary conduit boxes, shall be as shown in Figure 2-5.

NEMA Standard 8-28-1991

* "One bushing" and "two bushings" refer to the number of fully-insulated primary terminals.

Copyright National Electrical Manufacturers Association
Provided by IHS under license with NEMA
No reproduction or networking permitted without license from IHS

Not for Resale

MINIMUM ELECTRICAL CHARACTERISTICS

BIL kV	RATED PRIMARY VOLTAGE FOR RATED VOLTAGE LINE-TO-LINE (VOLTS)	MARKED RATIO	MAX. OVERALL DIMENSIONS			MOUNTING DIMENSIONS	
			A	B	C	M	N
125	12,000 for 20,800 GRD Y	100:1	16	17	20	10	8 5/8
150	12,000 for 20,800 GRD Y	100:1	16	17	20	10	8 5/8
125	14,400 for 25,000 GRD Y	120:1	16	17	20	10	8 5/8
150	14,400 for 25,000 GRD Y	120:1	16	17	20	10	8 5/8
150	20,125 for 34,500 GRD Y	175:1	16	18	21	—	—
200	20,125 for 34,500 GRD Y	175:1	16	18	21	—	—

THERMAL BURDEN RATING AT 30°C	ACCURACY CLASS AND BURDEN			
	W	X	M	Y
500 VA	0.3	0.3	0.3	0.3

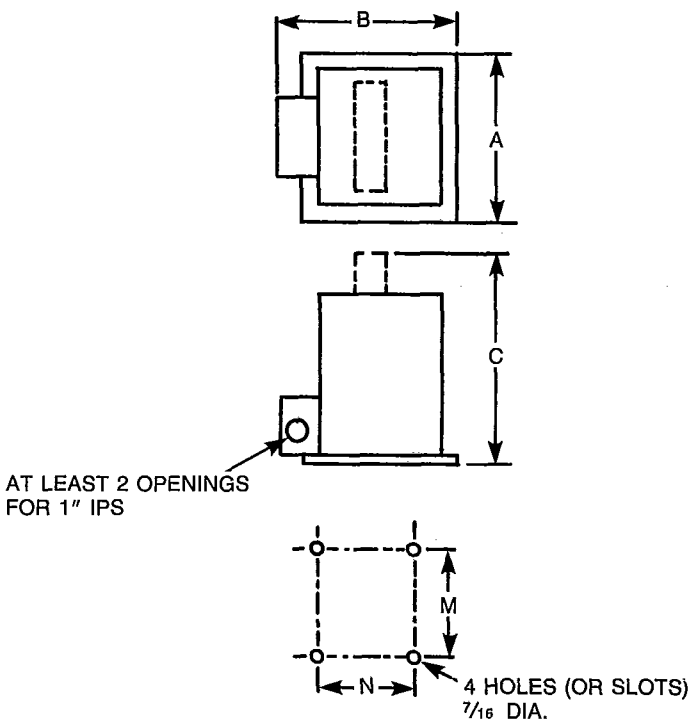

ALL DIMENSIONS IN INCHES—TOLERANCES ON DIAMETERS OF HOLES AND SLOTS ARE PLUS OR MINUS 1/32 INCH
—UNLESS OTHERWISE INDICATED OTHER TOLERANCES ARE PLUS OR MINUS 1/16 INCH

Figure 2-2
Small-Size Outdoor Voltage Transformers
150 kV BIL through 200 kV BIL
One Bushing Type 10

Copyright National Electrical Manufacturers Association
Provided by IHS under license with NEMA
No reproduction or networking permitted without license from IHS
Not for Resale

MINIMUM ELECTRICAL CHARACTERISTICS

BIL kV	RATED PRIMARY VOLTAGE FOR RATED VOLTAGE LINE-TO-LINE (VOLTS)	MARKED RATIO	MAX. OVERALL DIMENSIONS			MOUNTING DIMENSIONS	
			A	B	C	M	N
125	24,000 for 24,000 Y	200:1	16	17	20	10	8 5/8
150	24,000 for 24,800 Y	200:1	16	17	20	10	8 5/8
150	34,500 for 34,500 Y	300:1	16	18	21	—	—
200	34,500 for 34,500 Y	300:1	18	20	21	—	—

THERMAL BURDEN RATING AT 30°C	ACCURACY CLASS AND BURDEN			
	W	X	M	Y
500 VA	0.3	0.3	0.3	0.3

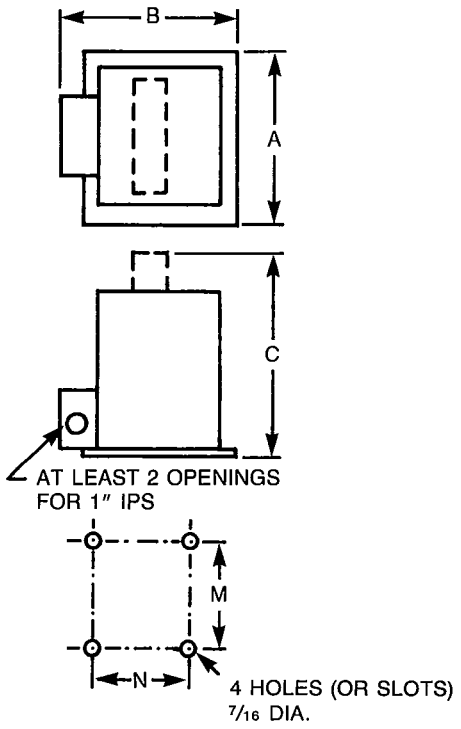

ALL DIMENSIONS IN INCHES—TOLERANCES ON DIAMETERS OF HOLES AND SLOTS ARE PLUS OR MINUS 1/32 INCH
—UNLESS OTHERWISE INDICATED OTHER TOLERANCES ARE PLUS OR MINUS 1/16 INCH

Mounting dimensions have not been established for 34.5 kV nominal system voltage

Figure 2-3
Small-Size Outdoor Voltage Transformers
125 kV BIL through 200 kV BIL
Two Bushing Type

Copyright National Electrical Manufacturers Association
Provided by IHS under license with NEMA
No reproduction or networking permitted without license from IHS
Not for Resale

MINIMUM ELECTRICAL CHARACTERISTICS

BIL kV	RATED PRIMARY VOLTAGE FOR RATED VOLTAGE LINE-TO-LINE (VOLTS)	MARKED RATIO	MAXIMUM OVERALL DIMENSIONS		
			A	B	C
150	14,400 FOR 25,000 GRD Y	120/200 & 120/200:1	19	20	46
200	20,125 FOR 34,000 GRD Y	175/300 & 175/300:1	21	23	54
250	27,600 FOR 46,000 GRD Y	240/400 & 240/400:1	21	24	60
350	40,250 FOR 69,000 GRD Y	350/600 & 350/600:1	26	34	74

THERMAL BURDEN RATING AT 30°C	ACCURACY CLASS AND BURDEN				
	W	X	M	Y	Z
1500 VA	0.3	0.3	0.3	0.3	0.3

DIMENSIONS

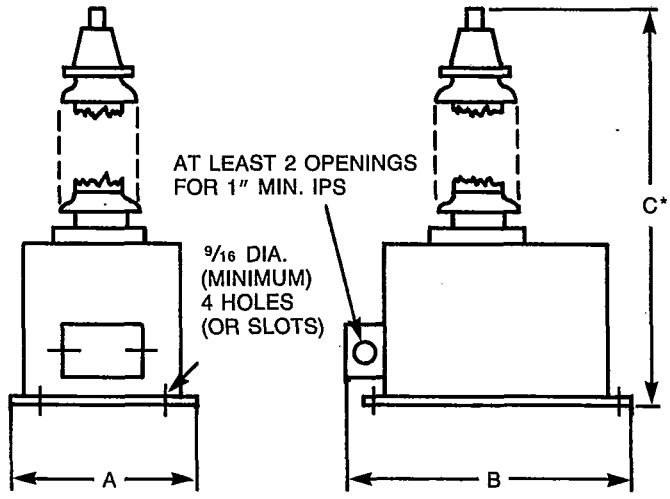

*DOES NOT INCLUDE PRIMARY TERMINAL ADAPTER

ALL DIMENSIONS IN INCHES—TOLERANCES ON DIAMETERS OF HOLES
ARE PLUS OR MINUS 1/32 INCH
—UNLESS OTHERWISE INDICATED OTHER TOLERANCES
ARE PLUS OR MINUS 1/16 INCH

Figure 2-4
Large-Size Outdoor Voltage Transformers
150 kV BIL through 350 kV BIL
One Bushing Type

Copyright National Electrical Manufacturers Association
Provided by IHS under license with NEMA
No reproduction or networking permitted without license from IHS
Not for Resale

MINIMUM ELECTRICAL CHARACTERISTICS

BIL kV	RATED PRIMARY VOLTAGE FOR RATED VOLTAGE LINE-TO-LINE (VOLTS)	MARKED RATIO	MAXIMUM OVERALL DIMENSIONS		
			A	B	C
150	24,000 FOR 24,000 Y	200:1	42	28	50
200	34,500 FOR 34,500 Y	300:1	46	32	54
250	46,000 FOR 46,000 Y	400:1	58	34	58
350	69,000 FOR 69,000 Y	600:1	69	38	70

THERMAL BURDEN RATING AT 30°C	ACCURACY CLASS AND BURDEN				
	W	X	M	Y	Z
1500 VA	0.3	0.3	0.3	0.3	0.3

DIMENSIONS

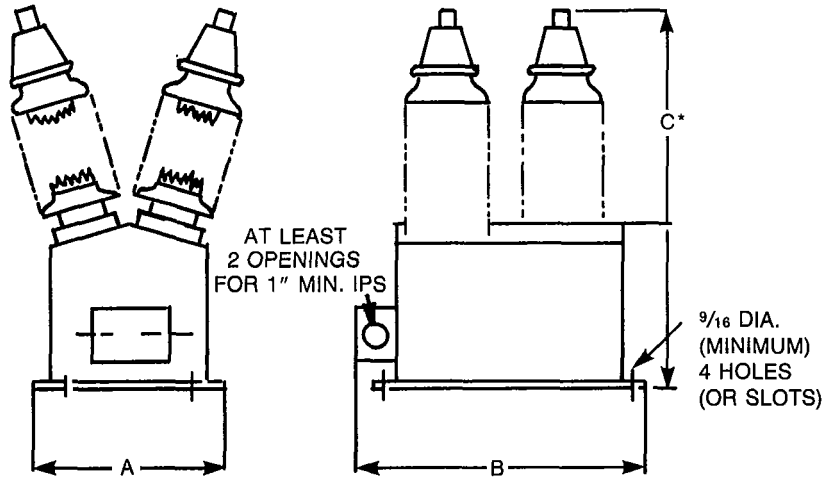

*DOES NOT INCLUDE PRIMARY TERMINAL ADAPTER

ALL DIMENSIONS IN INCHES—TOLERANCES ON DIAMETERS OF HOLES
ARE PLUS OR MINUS 1/32 INCH
—UNLESS OTHERWISE INDICATED OTHER TOLERANCES
ARE PLUS OR MINUS 1/16 INCH

Figure 2-5
Large-Size Outdoor Voltage Transformers
150 kV BIL through 350 kV BIL
Two Bushing Type

Copyright National Electrical Manufacturers Association
Provided by IHS under license with NEMA
No reproduction or networking permitted without license from IHS
Not for Resale

Appendix A
CIRCLE METHOD FOR DETERMINATION OF VOLTAGE TRANSFORMER ACCURACY (AUTHORIZED ENGINEERING INFORMATION)

The accuracy of a voltage transformer is directly affected by the burden connected to the secondary of the transformer. This burden is usually expressed in terms of volt-amperes and percent power factor.

The circle method provides an easy means for determining the accuracy of a voltage transformer at any desired burden by using only the phase angle and ratio correction factor (RCF) at 0 VA burden and one other known burden. Normally the manufacturer furnishes this information with the transformer.

Graph paper scaled such that a given distance represents 0.0010 units on the RCF axis and 3.438 minutes on the phase angle axis is necessary. A sample appears on the following page.

Example:

The following data are test results at 120 secondary volts for a 2,400:120 volt voltage transformer. At 0 VA burden: RCF, 0.9979; phase angle + 2.0 min. At 50 VA, 85% PF burden; RCF, 1.0040; phase angle, + 1.0 min. Performance at other volt ampere and power factor burdens can now be plotted by making radii proportional to volt-amperes and angles equal to power factor angles.

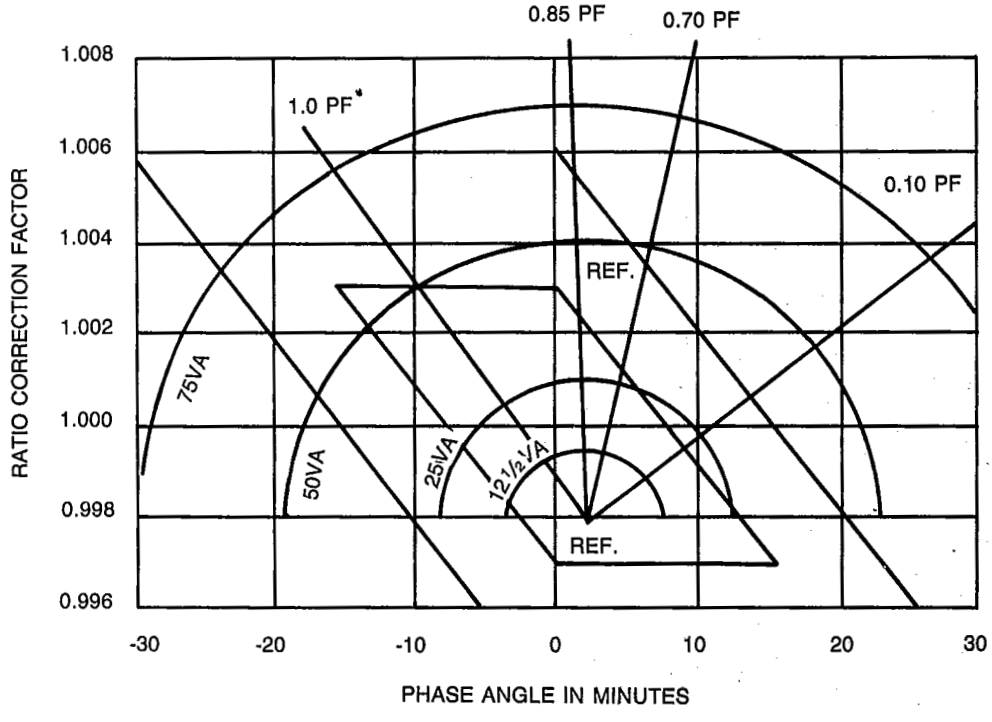

NOTE: Reference points representing two sets of given performance data are plotted on the grid. Points on the line connecting the two given burdens represent performance at various burdens with the same power factor.

Figure A-1
Circle Method for Determination of Voltage Transformer Accuracy

Copyright National Electrical Manufacturers Association
Provided by IHS under license with NEMA
No reproduction or networking permitted without license from IHS
Not for Resale

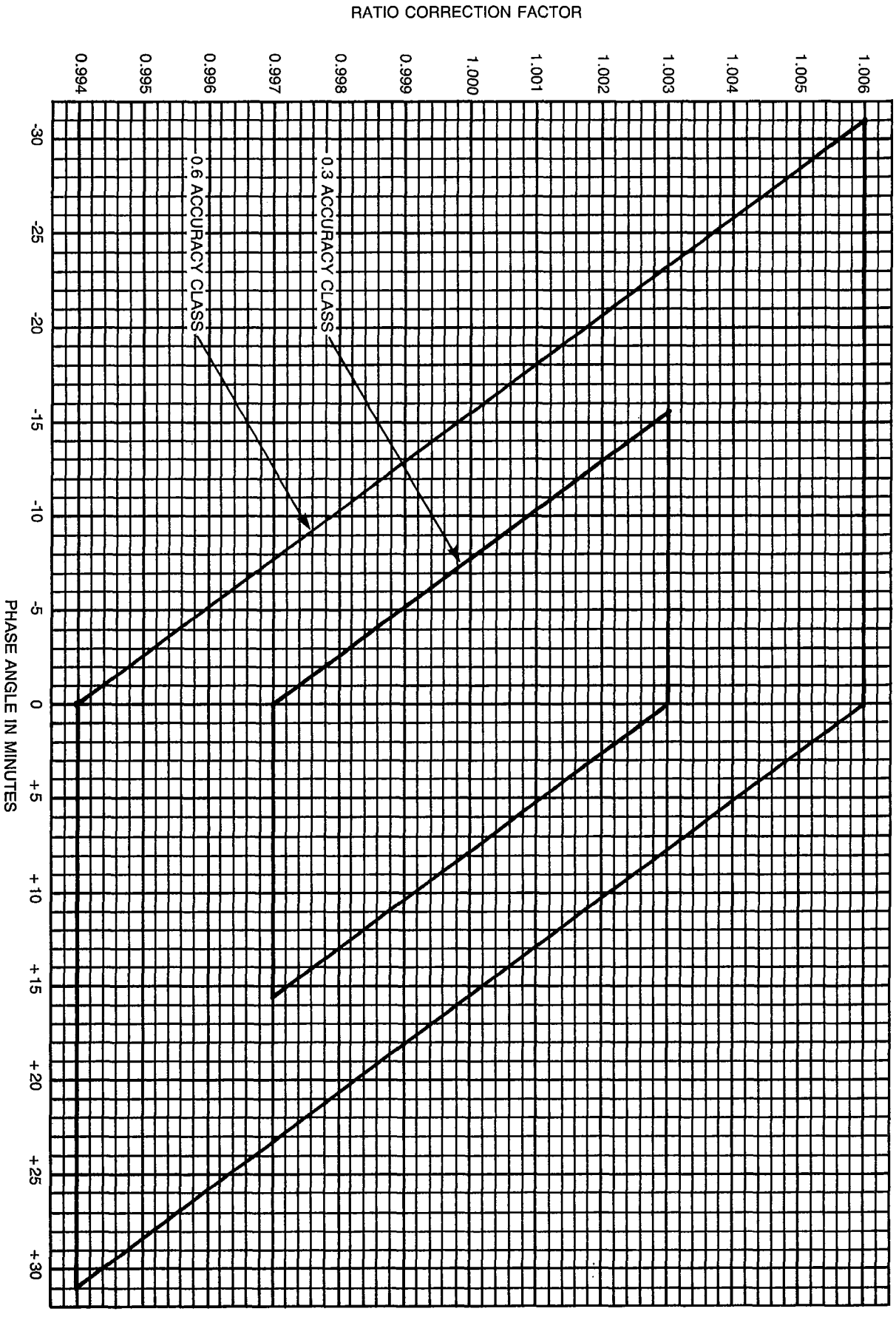

Figure A-2
SAMPLE OF GRAPH PAPER SPECIFICALLY SCALED FOR VOLTAGE TRANSFORMER CIRCLE DIAGRAM

Copyright National Electrical Manufacturers Association
Provided by IHS under license with NEMA
No reproduction or networking permitted without license from IHS
Not for Resale

NEMA STANDARDIZATION

The purpose of NEMA Standards, their classification and status are set forth in certain clauses of the NEMA *Standardization Policies and Procedures* manual and are referenced below:

Purpose of Standards

National Electrical Manufacturers Association Standards are adopted in the public interest and are designed to eliminate misunderstandings between the manufacturer and the purchaser and to assist the purchaser in selecting and obtaining the proper product for their particular needs. Existence of a National Electrical Manufacturers Association Standard does not in any respect preclude any member or nonmember from manufacturing or selling products not conforming to the standard.

(Standardization Policies and Procedures, p. 1)

Definition of a Standard

A standard of the National Electrical Manufacturers Association defines a product, process or procedure with reference to one or more of the following: nomenclature, composition, construction, dimensions, tolerances, safety, operating characteristics, performance, rating, testing, and the service for which they are designed.

(Standardization Policies and Procedures, p. 2)

Dimensions

Where dimensions are given for interchangeability purposes, alternate dimensions satisfying the other provisions of the Standards Publication may be capable of otherwise equivalent performance.

(Standardization Policies and Procedures, p. 8)

Categories of Standards

National Electrical Manufacturers Association Standards are of three classes:

1. NEMA Standard, which relates to a product, process or procedure commercially standardized and subject to repetitive manufacture, which standard has been approved by at least 90 percent of the members of the Subdivision eligible to vote thereon;
2. Suggested Standard for Future Design, which may not have been regularly applied to a commercial product, but which suggests a sound engineering approach to future development, which standard has been approved by at least two-thirds of the members of the Subdivision eligible to vote thereon.
3. Adoptive Standard, which is adopted in whole or in part from the standards of another organization, either domestic, regional, or international.

(Standardization Policies and Procedures, pp 7 & 16)

Authorized Engineering Information

Authorized Engineering Information consists of explanatory data and other engineering information of an informative character not falling within the classification of NEMA Standard or Suggested Standard for Future Design, which standard has been approved by at least two-thirds of the members of the Subdivision eligible to vote on the standard.

(Standardization Policies and Procedures, pp. 7 & 16)

Official Standards Proposal

An Official Standards Proposal is an official draft of a proposed standard which is formally recommended to an outside organization(s) for consideration, comment and/or approval, and which has been approved by at least 90 percent of the members of the Subdivision eligible to vote thereon. *(Standardization Policies and Procedures, pp 7 & 16)*

Identification of Status

Standards in NEMA Standards Publications are identified in the foreword or following each standard as "NEMA Standard" or "Suggested Standard for Future Design." These indicate the status of the standard. These words are followed by a date which indicates when the standard was adopted in its present form by the Association.

The material identified as "Authorized Engineering Information" and "Official Standards Proposal" is designated similarly.

July 17, 1990

Copyright National Electrical Manufacturers Association
Provided by IHS under license with NEMA
No reproduction or networking permitted without license from IHS
Not for Resale

ELECTRICAL MEASURING EQUIPMENT SECTION
OF THE
NATIONAL ELECTRICAL MANUFACTURERS ASSOCIATION
MEMBER COMPANIES

ABB Power T & D Company, Inc.
Raleigh, NC 27604

Anchor Electric Company
Manchester, NH 03105-0959

Astra Corporation
New Bedford, MA 02745

Circle A W Products
Portland, OR 97223

Cooper Distribution Equipment Division
Charlottesville, VA 22906

Cooper Industries, Inc.
Houston, TX 77002

The Durham Company
Lebanon, MO 65536

GE
Somersworth, NH 03878

Jemtec Electronics Company
Columbus, OH 43228

Landis & Gyr Metering, Inc.
Lafayette, IN 47903-7180

Meter Devices Company, Inc.
Canton, OH 44706

Metricom, Inc.
Los Gatos, CA 95030-2375

Milbank Manufacturing Company
Kansas City, MO 64141-0028

Schlumberger
Norcross, GA 30092

Siemens Energy & Automation, Inc.
Tucker, GA 30084

Square D Company
Palatine, IL 60067

Specialty Equipment Division
Monroe, NC 28110

Superior Technology, Inc.
Canton, OH 44707

Unicorn Electrical Products Division
Anaheim, CA 92816-6470

Copyright National Electrical Manufacturers Association
Provided by IHS under license with NEMA
No reproduction or networking permitted without license from IHS
Not for Resale