EI 21.1-83 6470247 0000766 4

F-61-21

STANDARDS PUBLICATION/NO. EI 21.1–1983

nema

Instrument Transformers for Revenue Metering 110 kV BIL and Less

NEMA

NATIONAL ELECTRICAL MANUFACTURERS ASSOCIATION ■ 2101 L STREET, N.W., WASHINGTON, D.C. 20037

Copyright National Electrical Manufacturers Association
Provided by IHS under license with NEMA
No reproduction or networking permitted without license from IHS
Not for Resale

©1984 by National Electrical Manufacturers Association

Copyright National Electrical Manufacturers Association
Provided by IHS under license with NEMA
No reproduction or networking permitted without license from IHS Not for Resale

TABLE OF CONTENTS

		Page
	FOREWORD	iii
	SCOPE	iii
Section 1	CURRENT TRANSFORMERS	
	General Requirements	1
	Definitions	1
	Standard Ratings	2
	Nameplate	2
	Polarity Marking of Terminals	2
	Secondary Lead Markings for Current Transformers Intended for Direct Burial	2
	Test Card	4
	Terminals	4
	Space for User Identification Number	4
	Mechanical Construction	4
	Indoor and Outdoor Current Transformers 10 kV BIL	4
	Indoor Current Transformers, 60 kV BIL through 110 kV BIL	4
	Outdoor Current Transformers, 60 kV BIL through 110kV BIL	4
Section 2	VOLTAGE TRANSFORMERS	
	General Requirements	15
	Definitions	15
	Primary Voltage Ratings and Basic Impulse Insulation Levels	15
	Standard Ratings	15
	Nameplate	16
	Rated Burden for 0.3 Accuracy Class	16
	Thermal Burden Rating	18
	Test Card	18
	Polarity Marking of Terminals	18
	Terminal Identification	18
	Primary Voltage Identification	18
	Terminals	18
	Space for User Identification Number	18
	Dimensions	18
Appendix A	Circle Method for Determination of Voltage Transformer Accuracy	21
Figure 1-1	0.3 Accuracy Class Limits for Current Transformers	3
Figure 1-2	Small-Size Window-Type Current Transformers, 10kV BIL	5
Figure 1-3	Intermediate-Size Window-Type Current Transformers, 10 kV BIL	6
Figure 1-4	Large-Size Window-Type Current Transformers, 10 kV BIL	7

(continued)

Copyright National Electrical Manufacturers Association
Provided by IHS under license with NEMA
No reproduction or networking permitted without license from IHS
Not for Resale

TABLE OF CONTENTS *(continued)* **Page**

Figure 1-5	Large-Size Window-Type Current Transformers, 10kV BIL	8
Figure 1-6	Small-Size Wound or Bar-Type Current Transformers, 10 kV BIL	9
Figure 1-7	Intermediate-Size Wound or Bar-Type Current Transformers, 10 kV BIL	10
Figure 1-8	Large-Size Bar-Type Current Transformers, 10 kV BIL	11
Figure 1-9	Window-Type Current Transformers 10 kV BIL for Application in Secondary Compartment of Pad-Mounted Distribution Transformers	12
Figure 1-10	Indoor Current Transformers, 60 kV BIL Through 110 kV BIL	13
Figure 1-11	Outdoor Current Transformers, 60 kV BIL Through 110 kV BIL	14
Figure 2-1	0.3 Accuracy Class Limits for Voltage Transformers	17
Figure 2-2	Dimensions of Voltage Transformers, Indoor-10 kV BIL Through 110 kV BIL, Outdoor-10 kV BIL and 30 kV BIL	19
Figure 2-3	Dimensions of Outdoor Voltage Transformers, 60 kV BIL Through 110 kV BIL	20
Figure A-1	Circle Method for Determination of Voltage Transformer Accuracy	21
Figure A-2	Sample of Graph Paper Specifically Scaled for Voltage Transformer Circle Diagram	22
Table 1-1	Standard Burdens for Current Transformers with 5 Ampere Secondaries	2
Table 1-2	Standard Accuracy Class for Current Transformers	2
Table 2-1	Standard Burdens for Voltage Transformers	16
Table 2-2	Standard Accuracy Class for Voltage Transformers	16
Table 2-3	Primary Voltage Ratings and Basic Lightning Impulse Insulation Levels	16
Table 2-4	Minimum Burden Capability	18

Copyright National Electrical Manufacturers Association
Provided by IHS under license with NEMA
No reproduction or networking permitted without license from IHS
Not for Resale

Foreword

These standards are made available for the manufacturer and for the purchaser in order to assist them in selecting and obtaining a suitable product. The use of these standards is at the option of the individual manufacturer and purchaser. It is anticipated that those who use them will derive benefits of functional interchangeability.

To assure a meaningful publication, copies were sent during the draft stage to a number of typical individuals and organizations in the public and private sectors having an interest in or responsibility for the purchase, testing, application, use or inspection of this product category. The resulting comments and suggestions provided a vital user and general interest input to final NEMA approval and resulted in a number of substantive changes in this publication.

As future major revisions to this publication are proposed, the same or similar individuals or organizations will be offered a further opportunity to participate in the development of this publication.

Proposed or recommended revisions should be submitted to:

Manager, Engineering Department
National Electrical Manufacturers Association
2101 L Street, N.W.
Washington, D.C. 20037

Scope

These standards cover the general requirements, ratings, accuracy classifications, burdens, and pertinent dimensions applicable to instrument current and voltage transformers for revenue metering, 110 kV BIL and less.

The values stated in U.S. customary units shall be regarded as the standard. For purposes of this standards publication, metric values of length (in millimeters) shall be determined by multiplying the U.S. customary units (inches) by 25.4 and rounding off to the nearest .02 millimeter.

Copyright National Electrical Manufacturers Association
Provided by IHS under license with NEMA
No reproduction or networking permitted without license from IHS
Not for Resale

INSTRUMENT TRANSFORMERS FOR REVENUE METERING 110 kV BIL AND LESS

Section 1
CURRENT TRANSFORMERS

1.1 GENERAL REQUIREMENTS

Current transformers shall meet the applicable provisions of the *American National Standard for Instrument Transformers,* ANSI/IEEE C57.13-1978[1], in addition to the provisions contained in this Standards Publication.

NEMA Standard 9-15-1983.

1.2 DEFINITIONS

All definitions, except as specifically covered in this standard, shall be in accordance with ANSI/IEEE C57.13-1978, *American National Standard For Instrument Transformers.*

1.2.1 Accuracy Classes for Metering (Current Transformers)

Limits of a transformer correction factor, in terms of percent error, that have been established to cover specific performance ranges for line power-factor conditions between 1.0 and 0.6 lag.

1.2.2 Basic Lightning Impulse Insulation Levels (BIL)

A basic lightning impulse insulation level is a specific insulation level expressed in kilovolts of the crest value of a standard lightning impulse (1.2 × 50 microsecond wave).

1.2.3 Burden

The burden of a current transformer is that property of the circuit connected to its secondary winding that determines the active and reactive power at the secondary terminals. The burden is expressed either as the total ohms impedance with the effective resistive and reactive components, or as the total volt-amperes and power factor, at the specified value of current and frequency.

1.2.4 Continuous-Thermal-Current Rating Factor (Current Rating Factor) (RF)

The continuous-thermal-current rating factor is the factor by which the rated primary current can be multiplied to obtain the maximum primary current that can be carried continuously without exceeding the limiting temperature rise from a 30°C average ambient air temperature.

1.2.5 Current Transformer

A current transformer is an instrument transformer intended to have its primary winding connected in series with the conductor carrying the current to be measured or controlled. (In window type current transformers, the primary winding is provided by the line conductor and is not an integral part of the transformer.)

1.2.6 Indoor Current Transformer

An indoor current transformer is a current transformer which is constructed for installation indoors where it is protected from the weather.

NEMA Standard 9-15-1983.

For explanation of usual and unusual service conditions, see *American National Standard for Instrument Transformers*, ANSI/IEEE C57.13-1978[1].

Authorized Engineering Information 9-15-1983.

1.2.7 Outdoor Current Transformer

An outdoor current transformer is a current transformer which is constructed for installation outdoors where it is exposed to the weather.

NEMA Standard 9-15-1983.

For explanation of usual and unusual service conditions, see ANSI/IEEE C57.13-1978[1].

Authorized Engineering Information 9-15-1983.

1.2.8 Primary Winding

The primary winding of a current transformer is the winding intended to be on the energy input side.

1.2.9 Secondary Winding

The secondary winding of a current transformer is the winding intended to be connected to the measuring or control devices.

NEMA Standard 9-15-1983.

[1] Available from the American National Standards Institute, 1430 Broadway, New York, NY 10018.

Copyright National Electrical Manufacturers Association
Provided by IHS under license with NEMA
No reproduction or networking permitted without license from IHS
Not for Resale

1.3 STANDARD RATING

1. The frequency rating shall be 60 hertz.
2. The standard accuracy class for current transformers and the corresponding limits of transformer correction factor shall be as shown in Table 1-2.

The relationship between the limits of ratio correction factors and phase angles for the limiting values of transformer correction factors is shown in Figure 1-1.

3. The standard metering burdens shall be as shown in Table 1-1.
4. The standard continuous-thermal-current rating factor for a current transformer shall be 1.0, 1.33, 1.5, 2.0, 3.0 or 4.0.

NEMA Standard 9-15-1983.

1.4 NAMEPLATE

Current transformers shall be provided with nameplates which will include, as a minimum, the following information:

1. Manufacturer's name or trademark.
2. Manufacturer's type.
3. Manufacturer's serial number (SER), numerals only.
4. Rated primary and secondary amperes.
5. Nominal system voltage (NSV).
6. Basic lightning impulse insulation level (BIL__kV).
7. Rated frequency (Hz).
8. Current rating factor (RF).
9. Accuracy ratings (standard burdens at which the transformer meets 0.3 accuracy class).

NEMA Standard 9-15-1983.

1.5 POLARITY MARKING OF TERMINALS

The relative instantaneous polarity of the primary and secondary terminals shall be clearly indicated by permanent markings that cannot be obliterated easily.

When the polarity is indicated by letters, the letter H shall be used to indicate the primary terminals and the letter X shall be used to indicate the secondary terminals. H1 and X1 shall be of the same polarity.

NEMA Standard 9-15-1983.

1.6 SECONDARY LEAD MARKINGS FOR CURRENT TRANSFORMERS INTENDED FOR DIRECT BURIAL

When single ratio current transformers, intended for direct burial, have integral leads over 24 inches long, then:

1. The full length of the polarity lead shall be identified.
2. The secondary leads shall identify the rated primary current of the transformer.
3. The identification interval shall not exceed 12 inches.

NEMA Standard 9-15-1983.

Table 1-1
STANDARD BURDENS FOR CURRENT TRANSFORMERS WITH 5 AMPERE SECONDARIES

Standard Burden Designation†	Resistance Ohms	Inductance, Millihenrys	Impedance, Ohms	Volt-Amperes (at 5 amps)	Power Factor
B–0.1	0.09	0.116	0.1	2.5	0.9
B–0.2	0.18	0.232	0.2	5.0	0.9
B–0.5	0.45	0.580	0.5	12.5	0.9
B–0.9	0.81	1.04	0.9	22.5	0.9
B–1.8	1.62	2.08	1.8	45	0.9

†These standard burden designations have no significance at frequencies other than 60 Hz.

NEMA Standard 9-15-1983.

Table 1-2
STANDARD ACCURACY CLASS FOR CURRENT TRANSFORMERS

Accuracy Class	Limits of Transformer Correction Factor				Limits of Power Factor (Lagging) of Metered Power Load
	100% Rated Current*		10% Rated Current		
	Minimum	Maximum	Minimum	Maximum	
0.3	0.997	1.003	0.994	1.006	0.6 – 1.0

*These limits also apply at the maximum continuous current (continuous-current rating factor multiplied by the rated primary current).

NEMA Standard 9-15-1983.

Copyright National Electrical Manufacturers Association
Provided by IHS under license with NEMA
No reproduction or networking permitted without license from IHS
Not for Resale

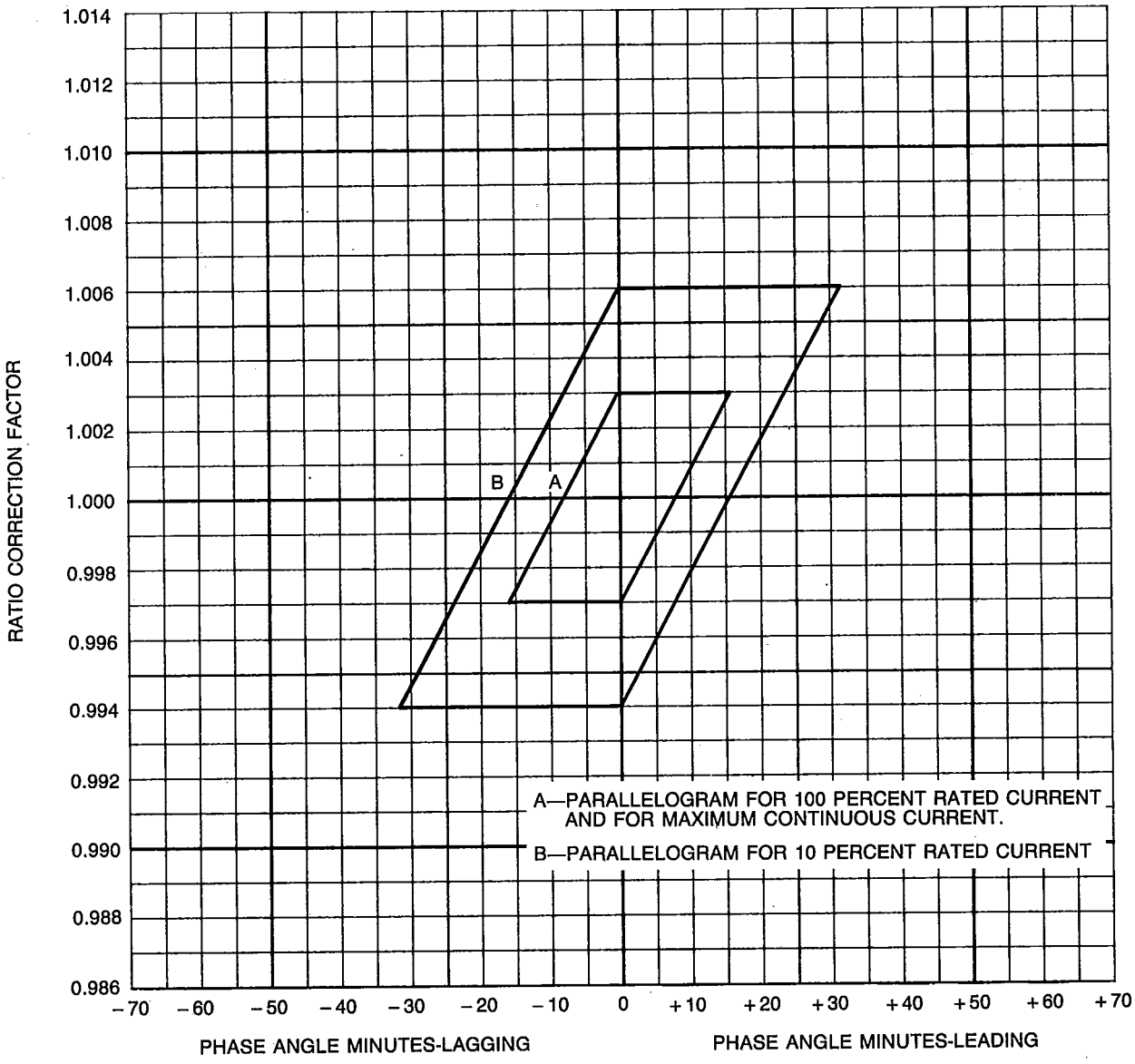

Figure 1-1
0.3 ACCURACY CLASS LIMITS FOR CURRENT TRANSFORMERS

Copyright National Electrical Manufacturers Association
Provided by IHS under license with NEMA
No reproduction or networking permitted without license from IHS
Not for Resale

1.7 TEST CARD

Current transformers shall be provided with a certificate of test, approximately 3 × 5 inches in dimension, which shall include, as a minimum, the following information:

1. Manufacturer's name or trademark.
2. Manufacturer's type.
3. Manufacturer's serial number.
4. Space for user identification number.
5. Rated primary and secondary amperes.
6. Factory accuracy test readings at 100 percent and 10 percent of rated primary current at the maximum standard burden for 0.3 accuracy class.
7. Date of factory accuracy test.
8. Initials of factory accuracy tester (unless tested automatically).

NEMA Standard 9-15-1983.

1.8 TERMINALS

1.8.1 Primary Terminals

Primary terminals of wound- and bar-type current transformers shall be electrically and mechanically suitable for use with either copper or aluminum conductors.

1.8.2 Secondary Terminals

Secondary terminals shall be electrically and mechanically suitable for use with copper stranded or solid conductors from No. 14 to No. 8 AWG.

1.8.3 Voltage Terminals

Voltage terminals, when required, shall be electrically and mechanically suitable for use with copper stranded or solid conductors from No. 14 to No. 8 AWG.

NEMA Standard 9-15-1983.

1.9 SPACE FOR USER IDENTIFICATION NUMBER

A space 2 to 2¾ inches long shall be provided for holding a ½ inch wide badge or for marking the user identification number.

NEMA Standard 9-15-1983.

1.10 MECHANICAL CONSTRUCTION

Current transformers shall be classified as to their physical construction, as follows:

1. Wound (wound-primary) type.
2. Bar-type.
3. Window-type.

NEMA Standard 9-15-1983.

1.11 INDOOR AND OUTDOOR CURRENT TRANSFORMERS, 10 kV BIL

1.11.1 Electrical Characteristics and Dimensions

The minimum electrical characteristics, the dimensions, and the maximum envelope, including the base, body, and secondary terminal covers, shall be as shown in Figures 1-2 through 1-9.

NEMA Standard 9-15-1983.

1.12 INDOOR CURRENT TRANSFORMERS, 60 kV BIL THROUGH 110 kV BIL

1.12.1 Basic Lightning Impulse Insulation Levels

The basic lightning impulse insulation levels (BIL) for these classes shall be 60, 75, 95, and 110 kV.

1.12.2 Electrical Characteristics and Dimensions

The minimum electrical characteristics, the dimensions, and the maximum envelope, including the base, body, and secondary terminal covers, shall be as shown in Figure 1-10.

1.12.3 Current Ratings

The current ratings, in amperes, shall be:

10:5	50:5	200:5	800:5
15:5	75:5	300:5	1200:5
25:5	100:5	400:5	1500:5
40:5	150:5	600:5	2000:5

NEMA Standard 9-15-1983.

1.13 OUTDOOR CURRENT TRANSFORMERS, 60 kV BIL THROUGH 110 kV BIL

1.13.1 Basic Lightning Impulse Insulation Levels

The basic lightning impulse insulation levels (BIL) for these classes shall be 60, 75, and 110 kV.

1.13.2 Electrical Characteristics and Dimensions

The minimum electrical characteristics, the dimensions, and the maximum envelope, including the base, body, secondary terminal covers, and secondary conduit boxes, shall be as shown in Figure 1-11.

1.13.3 Current Ratings

The current ratings, in amperes, shall be:

10:5	50:5	150:5	400:5
15:5	75:5	200:5	500:5
25:5	100:5	300:5	800:5
40:5			

NEMA Standard 9-15-1983.

Copyright National Electrical Manufacturers Association
Provided by IHS under license with NEMA
No reproduction or networking permitted without license from IHS
Not for Resale

MINIMUM ELECTRICAL CHARACTERISTICS

CURRENT RATING, AMPERES	CURRENT RATING FACTOR	ACCURACY CLASS AND BURDENS		MINIMUM WINDOW DIAMETER "A", INCHES
		B-0.1	B-0.2	
200:5	2.0	0.3	0.3	1 3/16
400:5	2.0	0.3	0.3	1 1/2

DIMENSIONS:

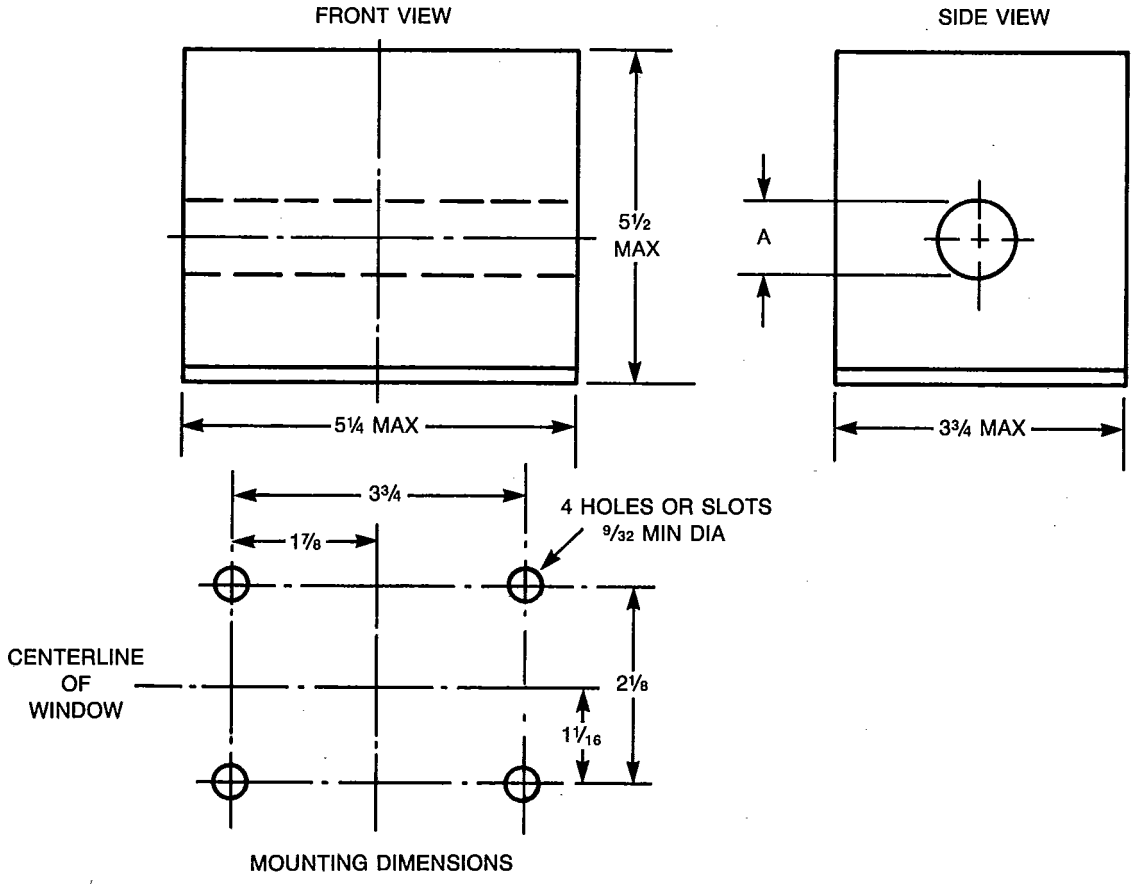

ALL DIMENSIONS IN INCHES.
UNLESS OTHERWISE INDICATED, THE TOLERANCE IS PLUS OR MINUS 1/16 INCH.

Figure 1-2
SMALL-SIZE WINDOW-TYPE CURRENT TRANSFORMERS, 10 kV BIL

Copyright National Electrical Manufacturers Association
Provided by IHS under license with NEMA
No reproduction or networking permitted without license from IHS
Not for Resale

MINIMUM ELECTRICAL CHARACTERISTICS

CURRENT RATING, AMPERES	CURRENT RATING FACTOR	ACCURACY CLASS AND BURDENS			CABLE DIAMETER OVER INSULATION, INCHES (SEE NOTE)	
		B-0.1	B-0.2	B-0.5	ONE CABLE	TWO CABLES (EACH)
200:5	2.0	0.3	0.3	...	1¾	1⅛
400:5	2.0	0.3	0.3	0.3	1¾	1¼
500:5	2.0	0.3	0.3	0.3	1¾	1¼
600:5	2.0	0.3	0.3	0.3	1¾	1¼
800:5	2.0	0.3	0.3	0.3	1¾	1¼

DIMENSIONS:

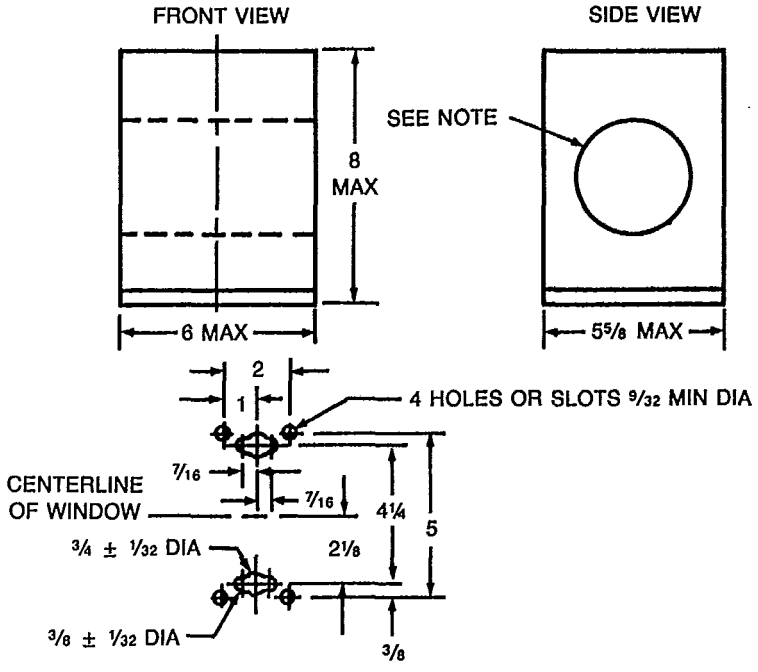

MOUNTING DIMENSIONS

ALL DIMENSIONS IN INCHES.
UNLESS OTHERWISE INDICATED, THE TOLERANCE IS PLUS OR MINUS 1/16 INCH.

NOTE: WINDOW MAY BE OF ANY SHAPE BUT SHALL BE OF SUITABLE DIMENSIONS TO ACCEPT ONE-CABLE AND TWO-CABLE INSTALLATIONS AS SHOWN IN THE TABLE.

Figure 1-3
INTERMEDIATE-SIZE WINDOW-TYPE CURRENT TRANSFORMERS, 10 kV BIL

Copyright National Electrical Manufacturers Association
Provided by IHS under license with NEMA
No reproduction or networking permitted without license from IHS
Not for Resale

MINIMUM ELECTRICAL CHARACTERISTICS

CURRENT RATING, AMPERES	CURRENT RATING FACTOR	ACCURACY CLASS AND BURDENS		
		B-0.1	B-0.2	B-0.5
800:5	2.0	0.3	0.3	0.3
1000:5	1.5	0.3	0.3	0.3
1200:5	1.5	0.3	0.3	0.3
1500:5	1.5	0.3	0.3	0.3
2000:5	1.5	0.3	0.3	0.3
3000:5	1.33	0.3	0.3	0.3
4000:5	1.33	0.3	0.3	0.3
6000:5	1.0	0.3	0.3	0.3

DIMENSIONS:

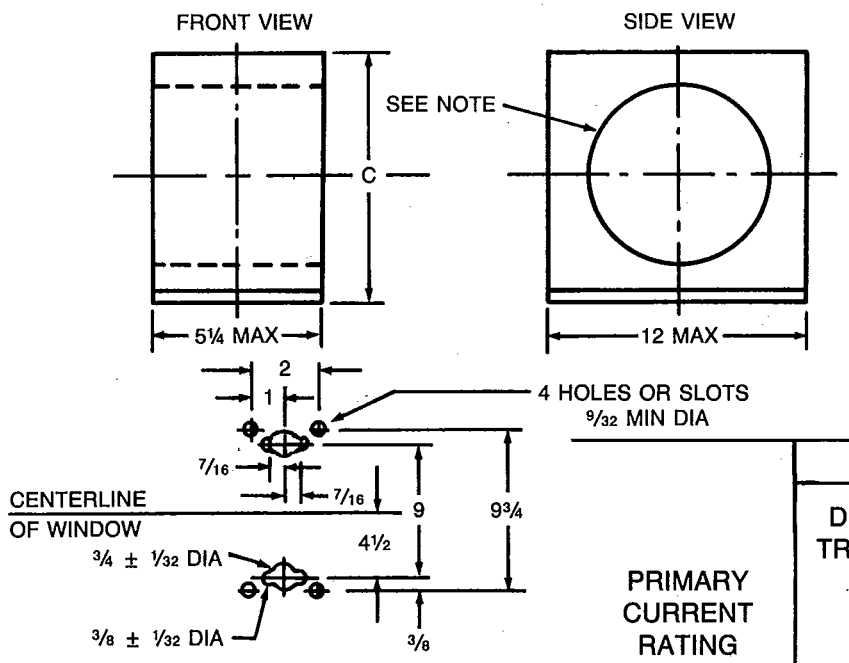

MOUNTING DIMENSIONS FOR SIZE I
(SIZE II IS NOT USUALLY BASE MOUNTED)

PRIMARY CURRENT RATING	DIMENSIONS-INCHES	
	DIMENSION C TRANSFORMER MAXIMUM HEIGHT, INCHES	SQUARE BUS MINIMUM DIAGONAL
SIZE I-UP TO 4000	12	5⅜
SIZE II 2000 TO 6000	13½	8⅛

ALL DIMENSIONS IN INCHES.
UNLESS OTHERWISE INDICATED, THE TOLERANCE IS PLUS OR MINUS 1/16 INCH.

NOTE: WINDOW MAY BE OF ANY SHAPE BUT SHALL ACCEPT A BUS STRUCTURE AS SHOWN IN THE TABLE.

Figure 1-4
LARGE-SIZE WINDOW-TYPE CURRENT TRANSFORMERS, 10 kV BIL

Copyright National Electrical Manufacturers Association
Provided by IHS under license with NEMA
No reproduction or networking permitted without license from IHS
Not for Resale

MINIMUM ELECTRICAL CHARACTERISTICS

CURRENT RATING, AMPERES	CURRENT RATING FACTOR	ACCURACY CLASS AND BURDENS		
		B-0.1	B-0.2	B-0.5
800:5	2.0	0.3	0.3	0.3
1000:5	1.5	0.3	0.3	0.3
1200:5	1.5	0.3	0.3	0.3
1500:5	1.5	0.3	0.3	0.3
2000:5	1.5	0.3	0.3	0.3
3000:5 (SIZE I)	1.33	0.3	0.3	0.3
3000:5 (SIZE II)	1.5	0.3	0.3	0.3
4000:5	1.5	0.3	0.3	0.3
6000:5	1.0	0.3	0.3	0.3

DIMENSIONS:

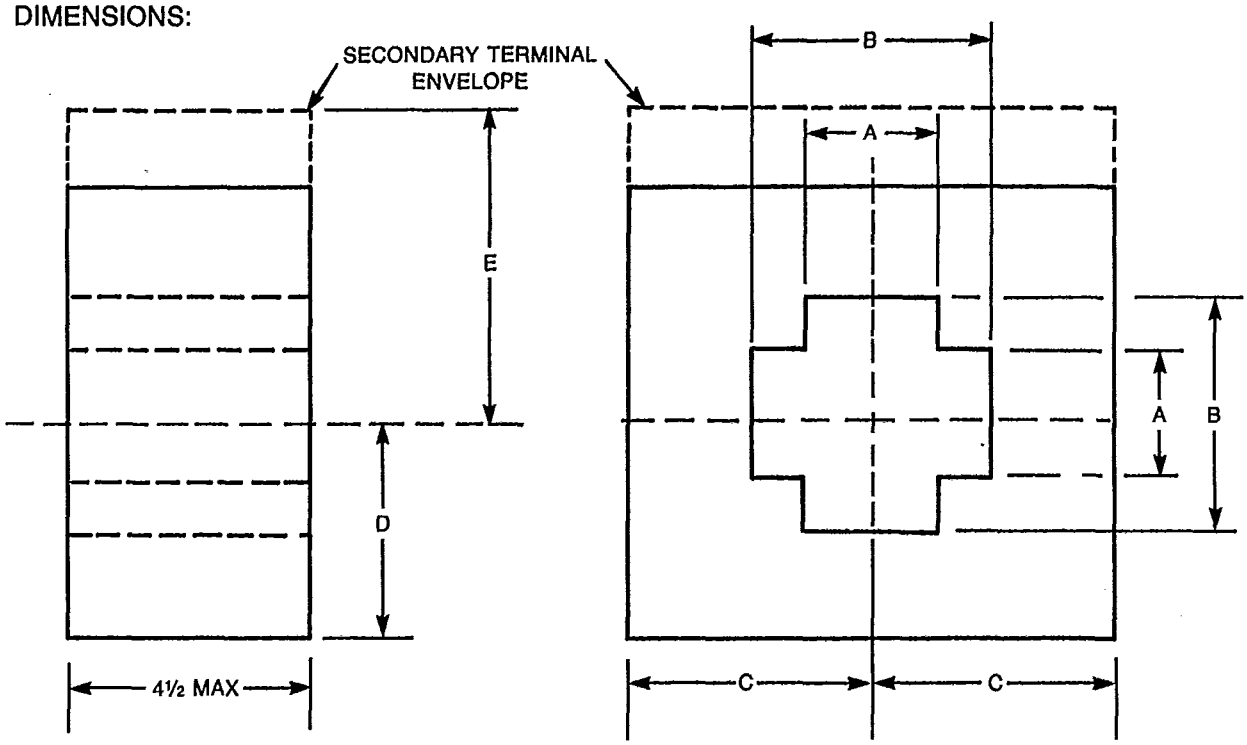

PRIMARY CURRENT RATING	DIMENSION A		DIMENSION B		DIMENSION C	DIMENSION D	DIMENSION E
	MINIMUM	MAXIMUM	MINIMUM	MAXIMUM	MAXIMUM	MAXIMUM	MAXIMUM
SIZE I-UP TO 3000 AMPERES	2 5/16	2½	4 5/16	4½	4¼	4½	6¼
SIZE II-2000 TO 6000 AMPERES	3 5/16	3½	5 5/16	5½	5¾	5¾	7¼

ALL DIMENSIONS IN INCHES.
UNLESS OTHERWISE INDICATED, THE TOLERANCE IS PLUS OR MINUS 1/16 INCH.

Figure 1-5
LARGE-SIZE WINDOW-TYPE CURRENT TRANSFORMERS, 10 kV BIL

Copyright National Electrical Manufacturers Association
Provided by IHS under license with NEMA
No reproduction or networking permitted without license from IHS
Not for Resale

MINIMUM ELECTRICAL CHARACTERISTICS

CURRENT RATING, AMPERES	CURRENT RATING FACTOR	ACCURACY CLASS AND BURDENS		DIMENSION A, INCHES	
		B-0.1	B-0.2	MINIMUM	MAXIMUM
200:5	2.0	0.3	0.3	1¼	2
400:5	2.0	0.3	0.3	1½	2½
600:5	2.0	0.3	0.3	2	3
800:5	1.5	0.3	0.3	2¼	3

DIMENSIONS:

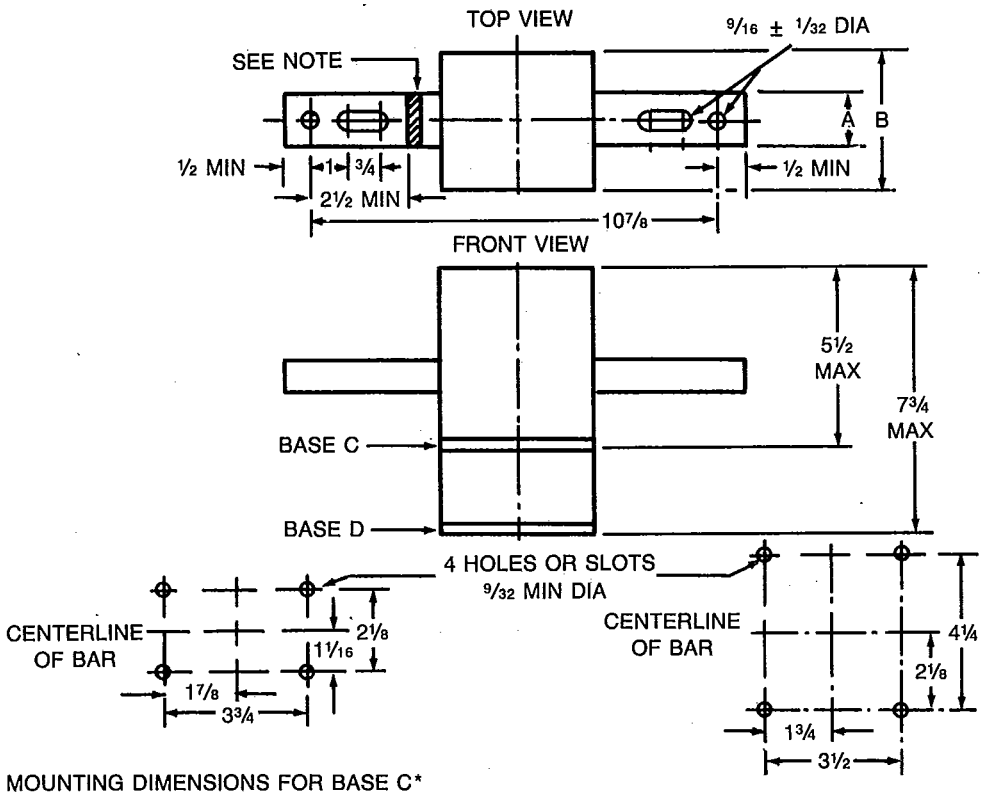

BASE*	DIMENSION B MAXIMUM, INCHES
C	3¾
D	5⅝

MOUNTING DIMENSIONS FOR BASE C*

MOUNTING DIMENSIONS FOR BASE D*

*THE TRANSFORMERS SHALL BE PROVIDED WITH EITHER BASE C OR D.

ALL DIMENSIONS IN INCHES.
UNLESS OTHERWISE INDICATED, THE TOLERANCE IS PLUS OR MINUS 1/16 INCH.

NOTE: VOLTAGE TERMINAL, ON PRIMARY BAR ON POLARITY SIDE ONLY, MAY BE LOCATED ANYWHERE IN THE SHADED AREA SHOWN, PREFERABLY TOWARD THE SECONDARY TERMINALS.

Figure 1-6
SMALL-SIZE WOUND OR BAR-TYPE CURRENT TRANSFORMERS, 10 kV BIL

Copyright National Electrical Manufacturers Association
Provided by IHS under license with NEMA
No reproduction or networking permitted without license from IHS
Not for Resale

MINIMUM ELECTRICAL CHARACTERISTICS

CURRENT RATING, AMPERES	CURRENT RATING FACTOR	ACCURACY CLASS AND BURDENS			DIMENSION A, INCHES	
		B-0.1	B-0.2	B-0.5	MINIMUM	MAXIMUM
200:5	2.0	0.3	0.3	...	1½	2
400:5	2.0	0.3	0.3	0.3	1½	2½
500:5	2.0	0.3	0.3	0.3	2	3
600:5	2.0	0.3	0.3	0.3	2	3
800:5	2.0	0.3	0.3	0.3	2¼	3

DIMENSIONS:

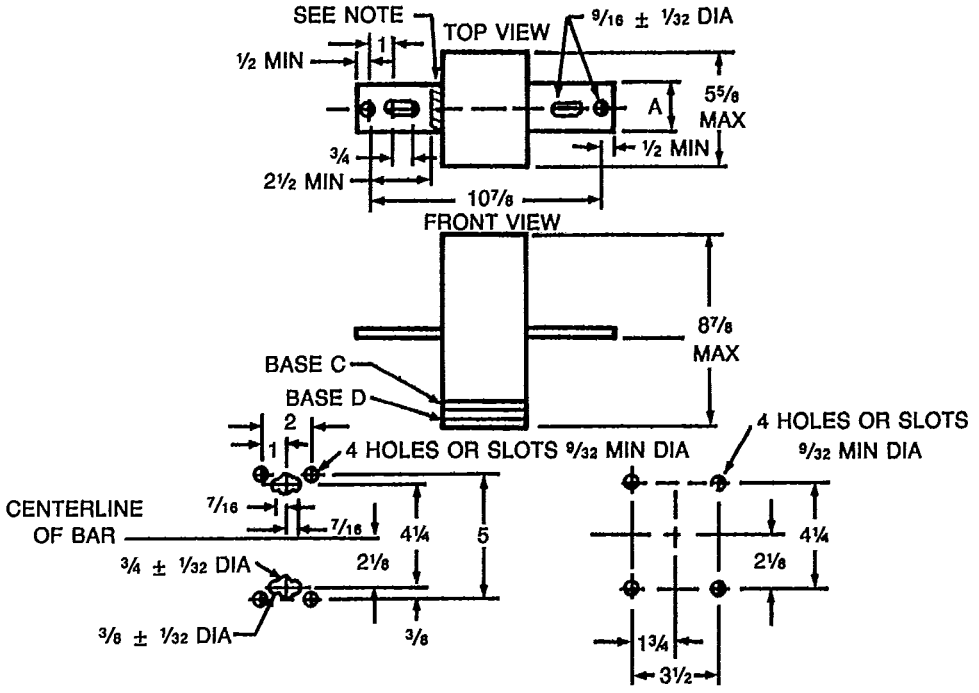

*THE TRANSFORMERS SHALL BE PROVIDED WITH EITHER BASE C OR D.

ALL DIMENSIONS IN INCHES.
UNLESS OTHERWISE INDICATED, THE TOLERANCE IS PLUS OR MINUS 1/16 INCH.

NOTE: VOLTAGE TERMINAL, ON PRIMARY BAR ON POLARITY SIDE ONLY, MAY BE LOCATED ANYWHERE IN THE SHADED AREA SHOWN, PREFERABLY TOWARD THE SECONDARY TERMINALS.

Figure 1-7
INTERMEDIATE-SIZE WOUND OR BAR-TYPE CURRENT TRANSFORMERS, 10 kV BIL

Copyright National Electrical Manufacturers Association
Provided by IHS under license with NEMA
No reproduction or networking permitted without license from IHS
Not for Resale

MINIMUM ELECTRICAL CHARACTERISTICS

CURRENT RATING, AMPERES	CURRENT RATING FACTOR	ACCURACY CLASS AND BURDENS B-0.1	B-0.2	B-0.5
800:5	2.0	0.3	0.3	0.3
1000:5	1.5	0.3	0.3	0.3
1200:5	1.5	0.3	0.3	0.3
1500:5	1.5	0.3	0.3	0.3
2000:5	1.5	0.3	0.3	0.3
3000:5	1.33	0.3	0.3	0.3
4000:5	1.0	0.3	0.3	0.3

DIMENSIONS:

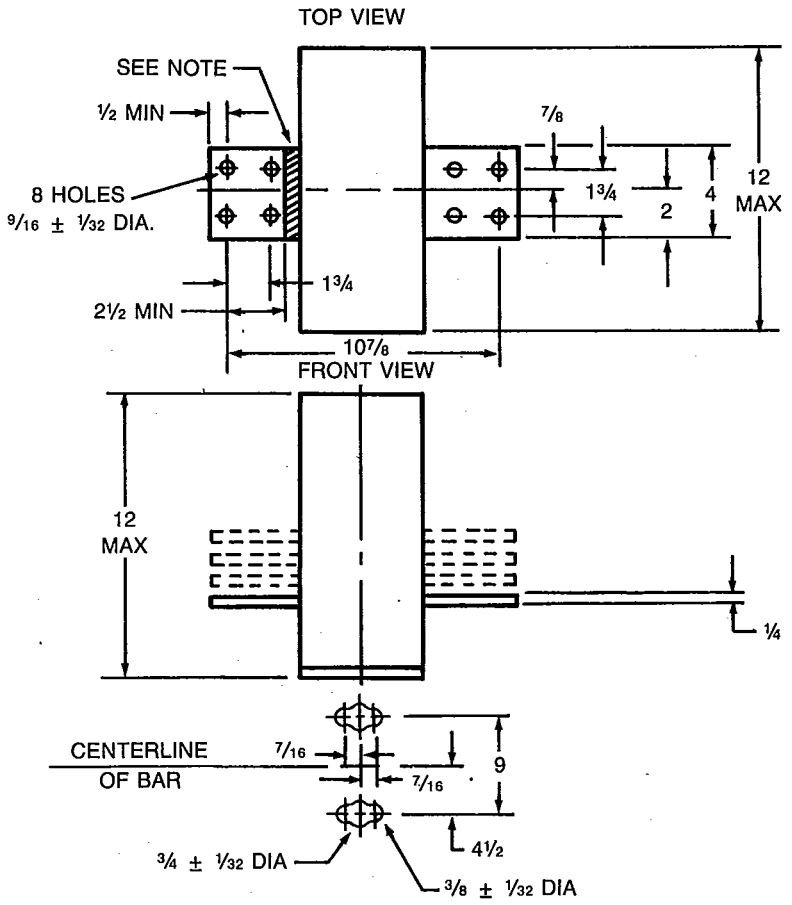

MOUNTING DIMENSIONS

ALL DIMENSIONS IN INCHES. UNLESS OTHERWISE INDICATED, THE TOLERANCE SHALL BE PLUS OR MINUS 1/16 INCH. ON MULTI-BAR ASSEMBLIES BARS SHALL BE ¼ INCH THICK AND THERE SHALL BE A ¼ INCH SPACING BETWEEN BARS.

NOTE: VOLTAGE TERMINALS, ON PRIMARY BAR ON POLARITY SIDE ONLY, SHALL BE PERMITTED TO BE LOCATED ANYWHERE IN THE SHADED AREA SHOWN, PREFERABLY TOWARD THE SECONDARY TERMINALS.

Figure 1-8
LARGE-SIZE BAR-TYPE CURRENT TRANSFORMERS, 10 kV BIL

Copyright National Electrical Manufacturers Association
Provided by IHS under license with NEMA
No reproduction or networking permitted without license from IHS
Not for Resale

MINIMUM ELECTRICAL CHARACTERISTICS

CURRENT RATING, AMPERES	CURRENT RATING FACTOR	ACCURACY CLASS AND BURDENS			MINIMUM WINDOW DIMENSION (SEE NOTE)	
		B-0.1	B-0.2	B-0.5	A	B
400:5	2.0	0.3	0.3	...	3½	½
500:5	2.0	0.3	0.3	...	3½	½
600:5	2.0	0.3	0.3	...	3½	½
800:5	2.0	0.3	0.3	0.3	3½	½
1000:5	2.0	0.3	0.3	0.3	4	¾
1200:5	1.5	0.3	0.3	0.3	4	¾
1500:5	1.5	0.3	0.3	0.3	4	¾
2000:5	1.5	0.3	0.3	0.3	4	¾
3000:5	1.0	0.3	0.3	0.3	4	¾

DIMENSIONS:

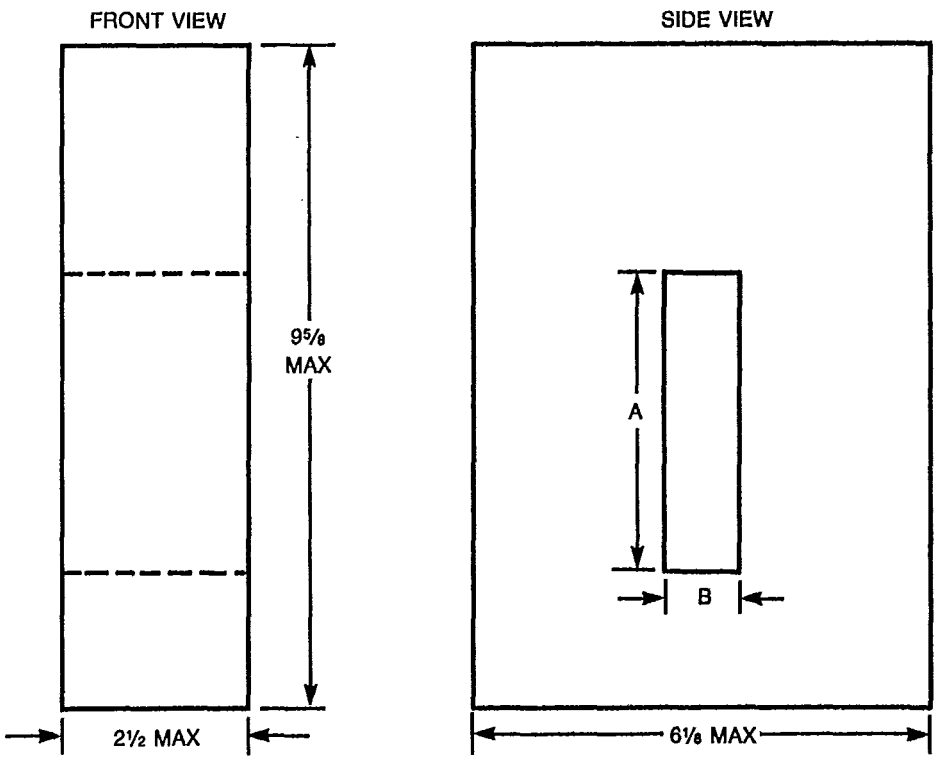

ALL DIMENSIONS IN INCHES.

NOTE: WINDOW MAY BE OF ANY SHAPE BUT SHALL BE OF SUITABLE DIMENSIONS TO ACCEPT RECTANGULAR BUS WITH DIMENSIONS "A" AND "B".

Figure 1-9
WINDOW-TYPE CURRENT TRANSFORMERS, 10 kV BIL FOR APPLICATION IN SECONDARY COMPARTMENT OF PAD-MOUNTED DISTRIBUTION TRANSFORMERS

Copyright National Electrical Manufacturers Association
Provided by IHS under license with NEMA
No reproduction or networking permitted without license from IHS
Not for Resale

MINIMUM ELECTRICAL CHARACTERISTICS

CURRENT RATING, AMPERES	CURRENT RATING FACTOR	ACCURACY CLASS AND BURDENS		
		B-0.1	B-0.2	B-0.5
10:5 THROUGH 400:5	1.5	0.3	0.3	0.3
600:5	1.33	0.3	0.3	0.3
800:5 THROUGH 2000:5	1.0	0.3	0.3	0.3

DIMENSIONS:

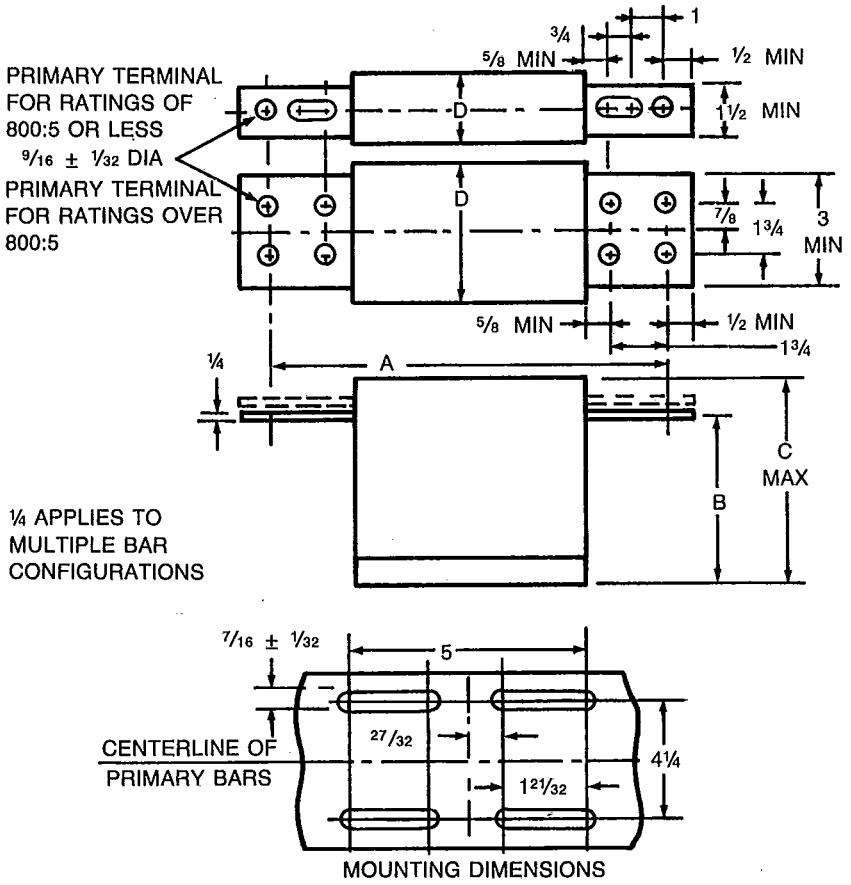

MOUNTING DIMENSIONS

BIL kV	DIMENSION A		TOLERANCE ± ⅛ DIMENSION B		DIMENSION C MAXIMUM		DIMENSION D MAXIMUM	
	10-800 AMPERES	1200-2000 AMPERES	10-800 AMPERES	1200-2000 AMPERES	10-800 AMPERES	1200-2000 AMPERES	10-800 AMPERES	1200-2000 AMPERES
60	14	14	5¾	5¾	8	13	6¼	11
75	15	15	8	5¾	10½	13	7	11
95 & 110	22	26	9	5¾	11¼	13	7	11

ALL DIMENSIONS IN INCHES. UNLESS OTHERWISE INDICATED, THE TOLERANCE IS PLUS OR MINUS 1/16 INCH. ON MULTI-BAR ASSEMBLIES BARS SHALL BE ¼ INCH THICK AND THERE SHALL BE A ¼ INCH SPACING BETWEEN BARS.

Figure 1-10
INDOOR CURRENT TRANSFORMERS, 60 kV BIL THROUGH 110 kV BIL

Copyright National Electrical Manufacturers Association
Provided by IHS under license with NEMA
No reproduction or networking permitted without license from IHS
Not for Resale

MINIMUM ELECTRICAL CHARACTERISTICS

CURRENT RATING, AMPERES	CURRENT RATING FACTOR	ACCURACY CLASS AND BURDENS		
		B-0.1	B-0.2	B-0.5
10:5 THROUGH 400:5	1.5	0.3	0.3	0.3
600:5	1.33	0.3	0.3	0.3
800:5	1.0	0.3	0.3	0.3

DIMENSIONS:

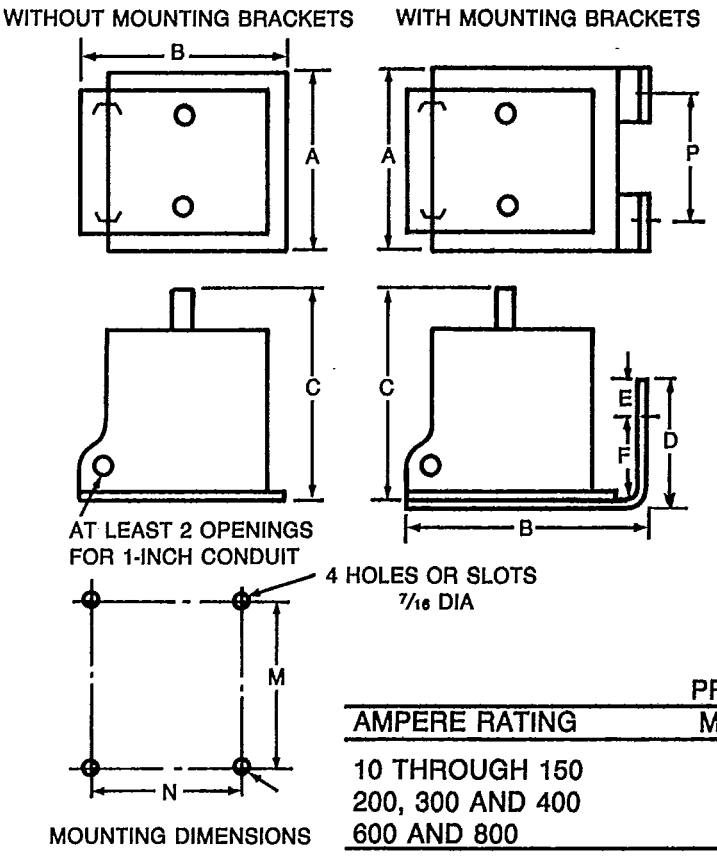

MOUNTING BRACKET DIMENSIONS

60 kV BIL 75 kV BIL 110 kV BIL (SIZE B)	110 kV BIL (SIZE A)
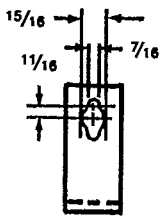	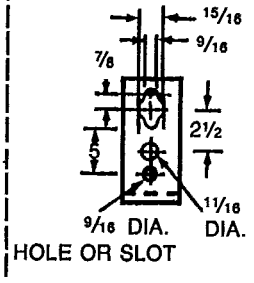

PRIMARY TERMINALS

AMPERE RATING	MINIMUM WIDTH	MINIMUM THICKNESS
10 THROUGH 150	1 1/2	3/16
200, 300 AND 400	2	1/4
600 AND 800	2	3/8

BIL kV	WITHOUT MOUNTING BRACKETS MAXIMUM OVERALL DIMENSIONS			MOUNTING DIMENSIONS		WITH MOUNTING BRACKETS MAXIMUM OVERALL DIMENSIONS				MOUNTING DIMENSIONS		
	A	B	C	M	N	A	B	C	D	E	F	P
60	9 1/2	11 1/2	12 1/2	8 1/2	6 1/4	9 1/2	13 1/2	13 1/4	6 1/2	1 7/8	3 3/4	7 5/8
75	9 1/2	11 1/2	12 1/2	8 1/2	6 1/4	9 1/2	13 1/4	13 1/4	6 1/2	1 7/8	3 3/4	7 5/8
110 (SIZE A)	11	13 1/2	16	10	8 5/8	11	17 3/4	18 1/2	12 1/2	1 7/8	7 7/8	8 7/8
110 (SIZE B)	11	13 1/2	16	8 1/2	6 1/4	11	17 3/4	18 1/2	12 1/2	1 7/8	3 3/4	7 5/8

ALL DIMENSIONS IN INCHES. TOLERANCE ON DIAMETERS OF HOLES, SLOTS AND KEYHOLES IS PLUS OR MINUS 1/32 INCH. UNLESS OTHERWISE INDICATED, OTHER TOLERANCES ARE PLUS OR MINUS 1/16 INCH.

Figure 1-11
OUTDOOR CURRENT TRANSFORMERS, 60 kV BIL THROUGH 110 kV BIL

Copyright National Electrical Manufacturers Association
Provided by IHS under license with NEMA
No reproduction or networking permitted without license from IHS
Not for Resale

Section 2
VOLTAGE TRANSFORMERS

2.1 GENERAL REQUIREMENTS

Voltage transformers shall meet the applicable provisions of the *American National Standard for Instrument Transformers,* ANSI/IEEE C57.13-1978[1], in addition to the provisions contained in this Standards Publication.

NEMA Standard 9-15-1983.

2.2 DEFINITIONS

All definitions, except as specifically covered in this standard, shall be in accordance with ANSI/IEEE C57.13-1978[1], *American National Standard for Instrument Transformers.*

2.2.1 Accuracy Classes for Metering (Voltage Transformers)

Accuracy classes for metering are the limits of a transformer correction factor, in terms of percent error, that have been established to cover specific performance ranges for line power-factor conditions between 1.0 and 0.6 lag.

2.2.2 Basic Lightning Impulse Insulation Levels (BIL)

A basic lightning impulse insulation level is a specific insulation level, expressed in kilovolts, of the crest value of a standard lightning impulse (nominal 1.2 × 50 microsecond wave).

2.2.3 Burden

The burden of a voltage transformer is that property of the circuit connected to its secondary winding that determines the active and reactive power at its secondary terminals. The burden is expressed in total ohms impedance with the effective resistive and reactive components, or as the total volt-amperes and power factor at the specified value of voltage and frequency.

2.2.4 Indoor Voltage Transformer

An indoor voltage transformer is a voltage transformer which is constructed for installation indoors where it is protected from the weather.

NEMA Standard 9-15-1983.

For explanation of usual and unusual service conditions, see *American National Standard for Instrument Transformers,* ANSI/IEEE C57.13-1978[1].

Authorized Engineering Information 9-15-1983.

2.2.5 Outdoor Voltage Transformer

An outdoor voltage transformer is a voltage transformer which is constructed for installation outdoors where it is exposed to the weather.

NEMA Standard 9-15-1983.

For explanation of usual and unusual service conditions, see *American National Standard for Instrument Transformers*, ANSI/IEEE C57.13-1978[1].

Authorized Engineering Information 9-15-1983.

2.2.6 Primary Winding

The primary winding of a voltage transformer is the winding intended to be on the energy input side.

2.2.7 Secondary Winding

The secondary winding of a voltage transformer is the winding intended to be connected to the measuring or control devices.

2.2.8 Thermal Burden Rating

The thermal burden rating of a voltage transformer is the volt-amperes output that the transformer will supply continuously at rated secondary voltage without causing the specified temperature limitations to be exceeded. (See *American National Standard for Instrument Transformers,* ANSI/IEEE C57.13-1978, Section 7.4[1].)

2.2.9 Voltage Transformers

A voltage transformer is an instrument transformer intended to have its primary winding connected in shunt with a power supply circuit, the voltage of which is to be measured or controlled.

NEMA Standard 9-15-1983.

2.3 PRIMARY VOLTAGE RATINGS AND BIL'S

The primary voltage ratings and the corresponding basic lightning impulse insulation levels shall be as shown in Table 2-3.

NEMA Standard 9-15-1983.

2.4 STANDARD RATINGS

1. The frequency rating shall be 60 hertz.
2. The standard accuracy class for voltage transformers and the corresponding limits of transformer

[1] American National Standards Institute, 1430 Broadway, New York, NY, 10018.

Copyright National Electrical Manufacturers Association
Provided by IHS under license with NEMA
No reproduction or networking permitted without license from IHS
Not for Resale

Table 2-1
STANDARD BURDENS FOR VOLTAGE TRANSFORMERS

Standard Burdens			Characteristics on 120-Volt Basis		
Designation*	Volt-Amps.	Power Factor	Resistance Ohms	Inductance Henrys	Impedance Ohms
W	12.5	0.10	115.2	3.04	1152
X	25	0.70	403.2	1.09	576
M	35	0.20	82.3	1.07	411
Y	75	0.85	163.2	0.268	192
Z	200	0.85	61.2	0.101	72

* These burden designations have no significance except at 60 Hz.

NEMA Standard 9-15-1983.

Table 2-2
STANDARD ACCURACY CLASS FOR VOLTAGE TRANSFORMERS

Accuracy Class	Limits of Transformer Correction Factor	Limits of Power Factor (Lagging) of Metered Power Load
0.3	1.003–0.997	0.6–1.0

NEMA Standard 9-15-1983.

correction factor shall be as shown in Table 2-2. The relationship between the limits of ratio correction factor and phase angles for the limiting values of transformer correction factors is shown in Figure 2-1.

3. Standard burdens for accuracy rating purposes shall be based on 120 volts. The standard burdens are shown in Table 2-1.

NEMA Standard 9-15-1983.

2.5 NAMEPLATE

Voltage transformers shall be provided with nameplates which shall include, as a minimum, the following information:

1. Manufacturer's name or trademark.
2. Manufacturer's type.
3. Manufacturer's serial number (SER), numerals only.
4. Rated primary voltage (PRI).
5. Ratio.
6. Basic lightning impulse insulation level (BIL__kV).
7. Rated frequency (Hz).
8. Thermal burden rating or ratings at ambient temperature or temperatures (__VA at__°C AMB).
9. Accuracy ratings (standard burdens at which the transformer meets 0.3 accuracy class).

NEMA Standard 9-15-1983.

2.6 RATED BURDEN FOR 0.3 ACCURACY CLASS

The burden capability for each BIL shall be not less than that shown in Table 2-4.

NEMA Standard 9-15-1983.

Table 2-3
PRIMARY VOLTAGE RATINGS AND BASIC LIGHTNING IMPULSE INSULATION LEVELS

BIL kV	Marked Ratio	Primary Voltage Rating, Volts
10	2:1	240
10	2.4:1	288
10	2.5:1	300
10	4:1	480
10	5:1	600
30	4:1	480
30	5:1	600
60	20:1	2400
60	35:1	4200
60	40:1	4800
75	35:1	4200
75	40:1	4800
75	60:1*	7200
95	60:1*	7200
95	70:1*	8400
95	100:1	12000
95	120:1	14400
110	60:1*	7200
110	70:1*	8400
110	100:1	12000
110	120:1	14400

*These ratings may be insulated neutral type, grounded neutral terminal type, or may have two fully insulated primary terminals.

Copyright National Electrical Manufacturers Association
Provided by IHS under license with NEMA
No reproduction or networking permitted without license from IHS
Not for Resale

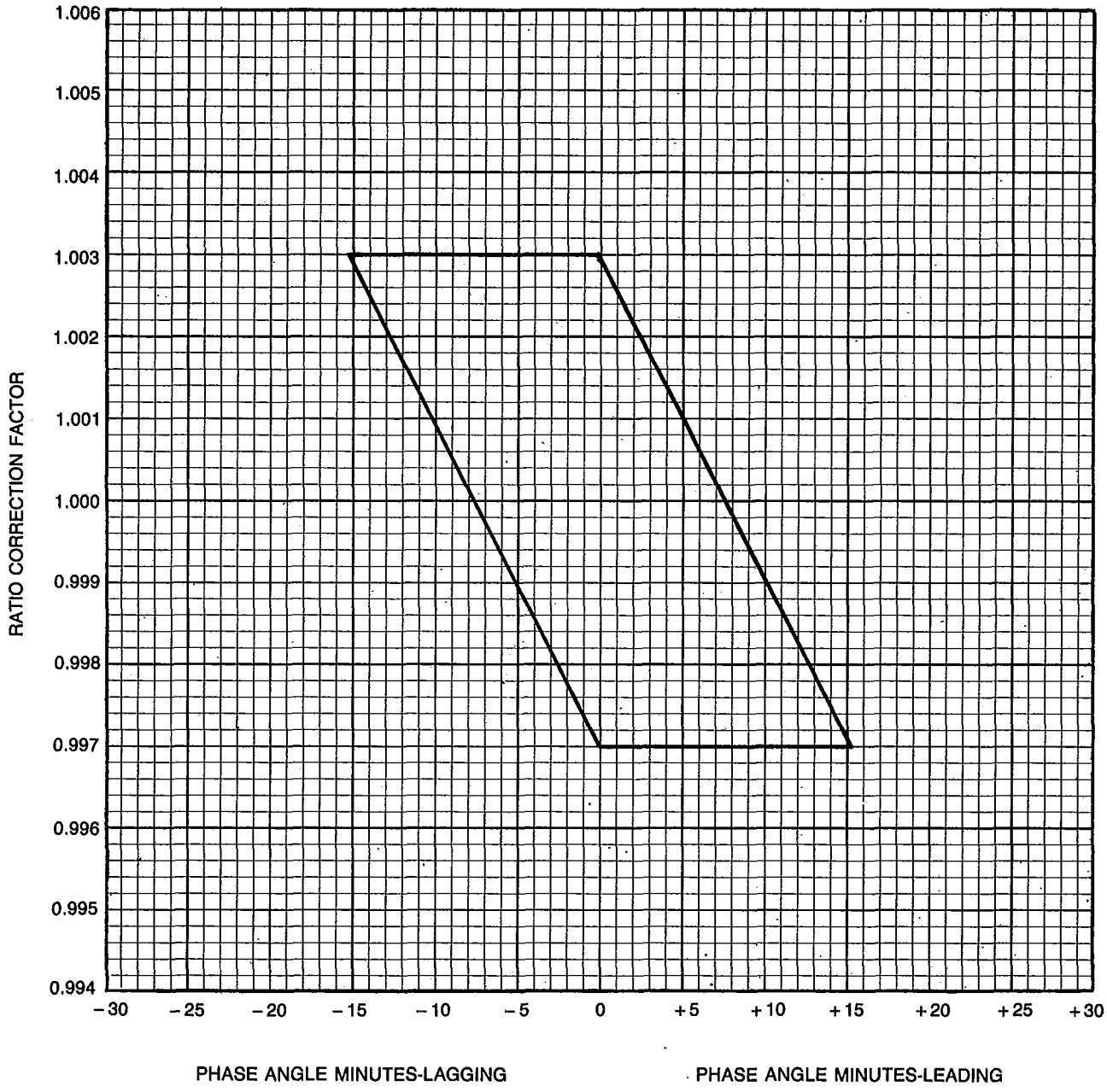

Figure 2-1
0.3 ACCURACY CLASS LIMITS FOR VOLTAGE TRANSFORMERS

Copyright National Electrical Manufacturers Association
Provided by IHS under license with NEMA
No reproduction or networking permitted without license from IHS
Not for Resale

Table 2-4
MINIMUM BURDEN CAPABILITY

Basic Lightning Impulse Insulation Level, kV	Primary Voltage Rating, Volts	Accuracy Classes and Burdens			
		W	X	M	Y
10 and 30	240–600	0.3	0.3	...	...
60 (indoor)	2400–4800	0.3	0.3	0.3	...
75 (indoor)	4200–7200	0.3	0.3	0.3	0.3
95 (indoor)	7200–14400	0.3	0.3	0.3	0.3
110 (indoor)	7200–14400	0.3	0.3	0.3	0.3
60 (outdoor)	2400–4800	0.3	0.3	0.3	0.3
75 (outdoor)	4200–7200	0.3	0.3	0.3	0.3
110 (outdoor)	7200–14400	0.3	0.3	0.3	0.3

2.7 THERMAL BURDEN RATING

The minimum thermal burden rating at rated voltage and frequency shall be 75 volt-amperes at a 55°C ambient temperature for transformers rated 240 through 600 volts and 200 volt-amperes at a 55°C ambient temperature for transformers rated 2400 through 14400 volts.

NEMA Standard 9-15-1983.

2.8 TEST CARD

Voltage transformers shall be provided with a certificate of test, approximately 3 × 5 inches in dimension, which shall include, as a minimum, the following information:

1. Manufacturer's name or trademark.
2. Manufacturer's type.
3. Manufacturer's serial number.
4. Space for user identification number.
5. Rated primary and secondary volts, rated primary volts and ratio to one, or rated secondary volts and ratio to one.
6. Factory accuracy test readings at 100 percent rated primary voltage with zero burden and the maximum standard burden for 0.3 accuracy class.
7. Date of factory accuracy test.
8. Initials of factory accuracy tester (unless tested automatically).

NEMA Standard 9-15-1983.

2.9 POLARITY MARKING OF TERMINALS

The relative instantaneous polarity of the primary and secondary terminals shall be clearly indicated by permanent markings that cannot be obliterated easily.

When the polarity is indicated by letters, the letter H shall be used to indicate the primary terminals and the letter X shall be used to indicate the secondary terminals. H1 and X1 shall be of the same polarity.

NEMA Standard 9-15-1983.

2.10 TERMINAL IDENTIFICATION

The primary and secondary terminals shall be prominently identified in such a manner that the identification cannot be obliterated easily.

NEMA Standard 9-15-1983.

2.11 PRIMARY VOLTAGE IDENTIFICATION

The rated primary voltage shall be prominently identified in such a manner that it cannot be obliterated easily.

NEMA Standard 9-15-1983.

2.12 TERMINALS

2.12.1 Primary Terminals

Primary terminals shall be electrically and mechanically suitable for use with either copper or aluminum stranded or solid conductors from No. 10 to No. 6 AWG.

2.12.2 Secondary Terminals

Secondary terminals shall be electrically and mechanically suitable for use with copper stranded or solid conductors from No. 14 to No. 8 AWG.

NEMA Standard 9-15-1983.

2.13 SPACE FOR USER IDENTIFICATION NUMBER

A space 2 to 2 ¾ inches long shall be provided for holding a ½ inch wide badge or for marking the user identification number.

NEMA Standard 9-15-1983.

2.14 DIMENSIONS

The dimensions of indoor or outdoor voltage transformers rated 10 and 30 kV BIL and of indoor voltage transformers rated 60 kV through 110 kV BIL shall be as shown in Figure 2-2.

The dimensions and maximum envelope of outdoor voltage transformers rated 60 kV through 110 kV BIL, including base, body, and secondary conduit boxes, shall be as shown in Figure 2-3.

NEMA Standard 9-15-1983.

Copyright National Electrical Manufacturers Association
Provided by IHS under license with NEMA
No reproduction or networking permitted without license from IHS
Not for Resale

MINIMUM ELECTRICAL CHARACTERISTICS

BIL KV	UNFUSED MAXIMUM OVERALL DIMENSIONS A	B	C	FUSED MAXIMUM OVERALL DIMENSIONS A	B	C	FUSED OR UNFUSED MOUNTING DIMENSIONS M	N_1	N_2
10	6¼	8¾	6¾	6¼	9¼	8	5	4	
30	6½	9¼	7¼	6½	9½	8	5	5	1 11/16
60	7¼	11½	8½	8	11¾	9½	5½	10	7¾
75	10¼	14	11	10¾	15¾	11¾*	8	12¼	10¼
95 AND 110	10¼	14	11	10¾	15¾	11¾*	8	12¼	10¼

*12¾ FOR SINGLE FUSE DESIGN.

DIMENSIONS

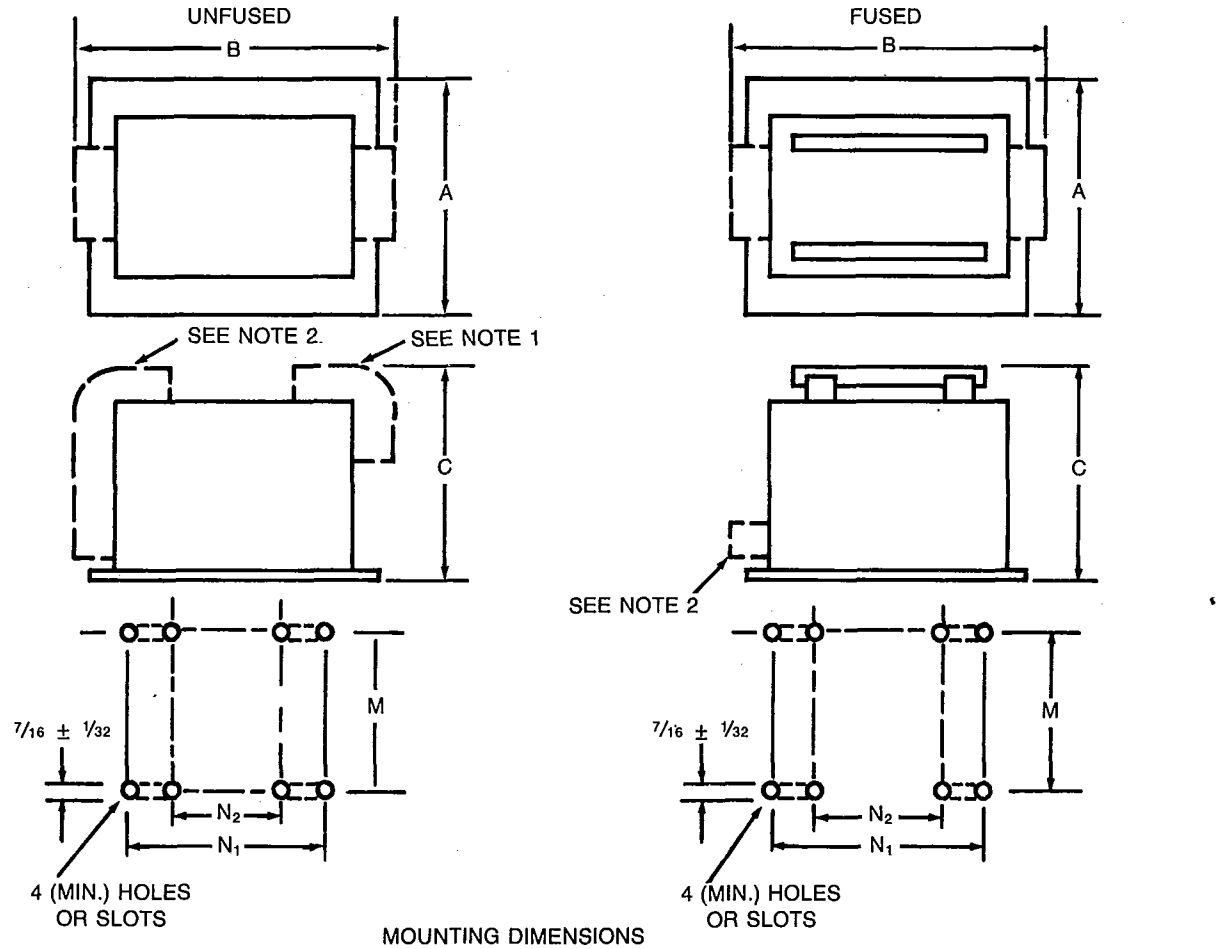

MOUNTING DIMENSIONS

ALL DIMENSIONS IN INCHES. UNLESS OTHERWISE INDICATED, THE TOLERANCE IS PLUS OR MINUS 1/16 INCH.

NOTE 1: PRIMARY TERMINALS, AND PRIMARY TERMINALS COVERS IF PROVIDED.

NOTE 2: SECONDARY TERMINALS, AND SECONDARY TERMINALS COVERS IF PROVIDED.

Figure 2-2
DIMENSIONS OF VOLTAGE TRANSFORMERS
INDOOR-10 kV BIL THROUGH 110 kV BIL
OUTDOOR-10 kV BIL AND 30 kV BIL

Copyright National Electrical Manufacturers Association
Provided by IHS under license with NEMA
No reproduction or networking permitted without license from IHS
Not for Resale

MINIMUM ELECTRICAL CHARACTERISTICS

BIL kV	WITHOUT MOUNTING BRACKETS MAXIMUM OVERALL DIMENSIONS			MOUNTING DIMENSIONS		WITH MOUNTING BRACKETS MAXIMUM OVERALL DIMENSIONS				MOUNTING DIMENSIONS		
	A	B	C	M	N	A	B	C	D	E	F	P
60	11½	13	13	8½	6¼	11½	15	13½	6½	1⅞	3¾	7⅝
75	14½	15½	18½	10	8⅝	14½	17½	21	12½	1⅞	7⅞	8⅞
110 (SIZE A)	14½	15½	18½	10	8⅝	14½	19¾	21	12½	1⅞	7⅞	8⅞
110 (SIZE B)	14½	15½	18½	8½	6¼	14½	19¾	21	12½	1⅞	3¾	7⅝

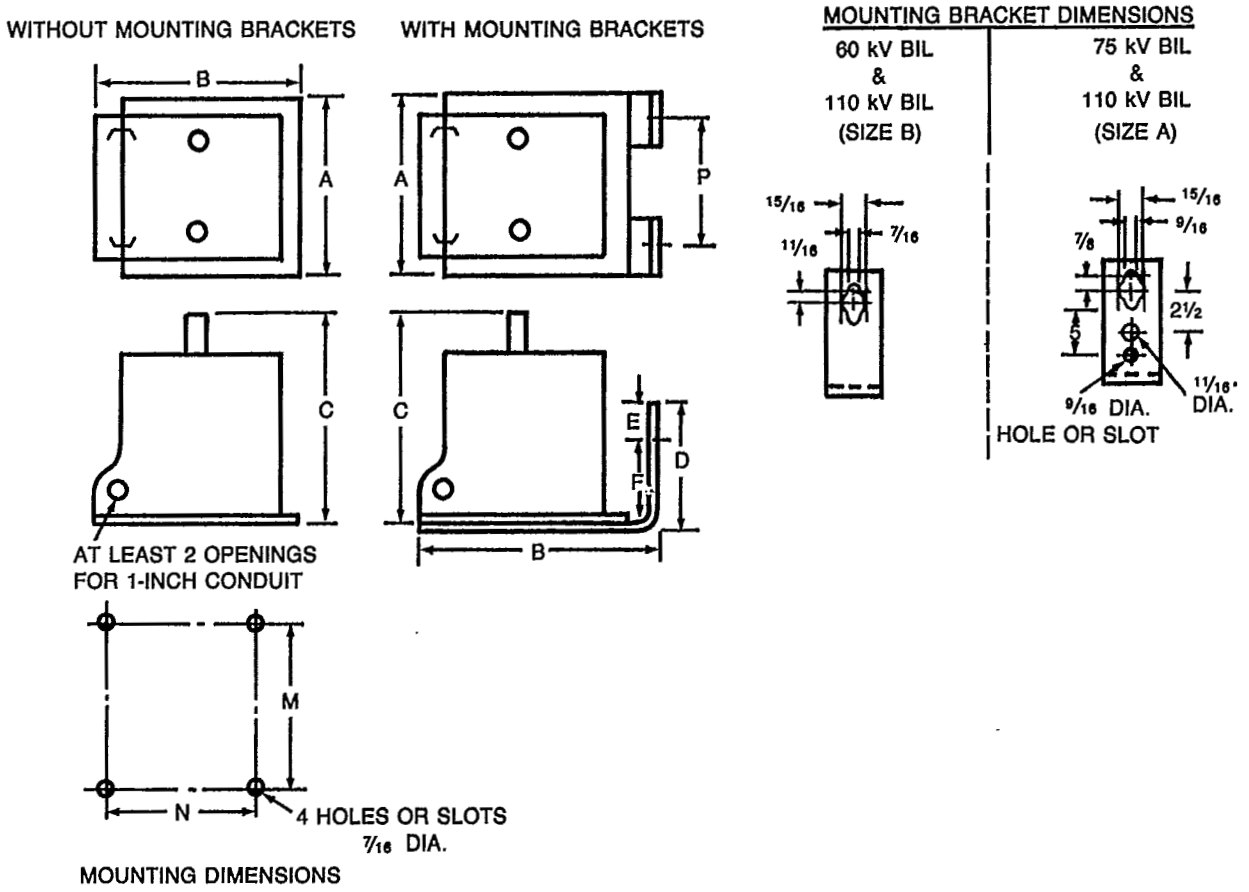

ALL DIMENSIONS IN INCHES. TOLERANCE ON DIAMETERS OF HOLES, SLOTS AND KEYHOLES IS PLUS OR MINUS 1/32 INCH. UNLESS OTHERWISE INDICATED, OTHER TOLERANCES ARE PLUS OR MINUS 1/16 INCH.

Figure 2-3
DIMENSIONS OF OUTDOOR VOLTAGE TRANSFORMERS,
60 kV BIL THROUGH 110 kV BIL

Copyright National Electrical Manufacturers Association
Provided by IHS under license with NEMA
No reproduction or networking permitted without license from IHS
Not for Resale

Appendix A
CIRCLE METHOD FOR DETERMINATION OF VOLTAGE TRANSFORMER ACCURACY

(Authorized Engineering Information 9-15-1983)

The accuracy of a voltage transformer is directly affected by the burden connected to the secondary of the transformer. This burden is usually expressed in terms of volt-amperes and percent power factor.

The circle method provides an easy means of determining the accuracy of a voltage transformer at any desired burden by using only the phase angle and ratio correction factor (RCF) at 0 volt-ampere burden and one other known burden. Normally the manufacturer furnishes this information with the transformer.

Graph paper which is scaled so that a given distance represents 0.001 units on the RCF axis and 3.438 minutes on the phase angle axis is necessary. A sample appears on the following page.

EXAMPLE

The following data are test results at 120 secondary volts for a 2400:120-volt voltage transformer. At 0 volt-ampere burden, RCF = 0.9979 and phase angle = +2.0 minutes. At 50 volt-amperes, 85 percent power factor burden, RCF = 1.0040 and phase angle = +1.0 minute. Performance at other volt-ampere and power factor burdens can now be plotted by making radii proportional to volt-amperes, and angles equal to power factor angles.

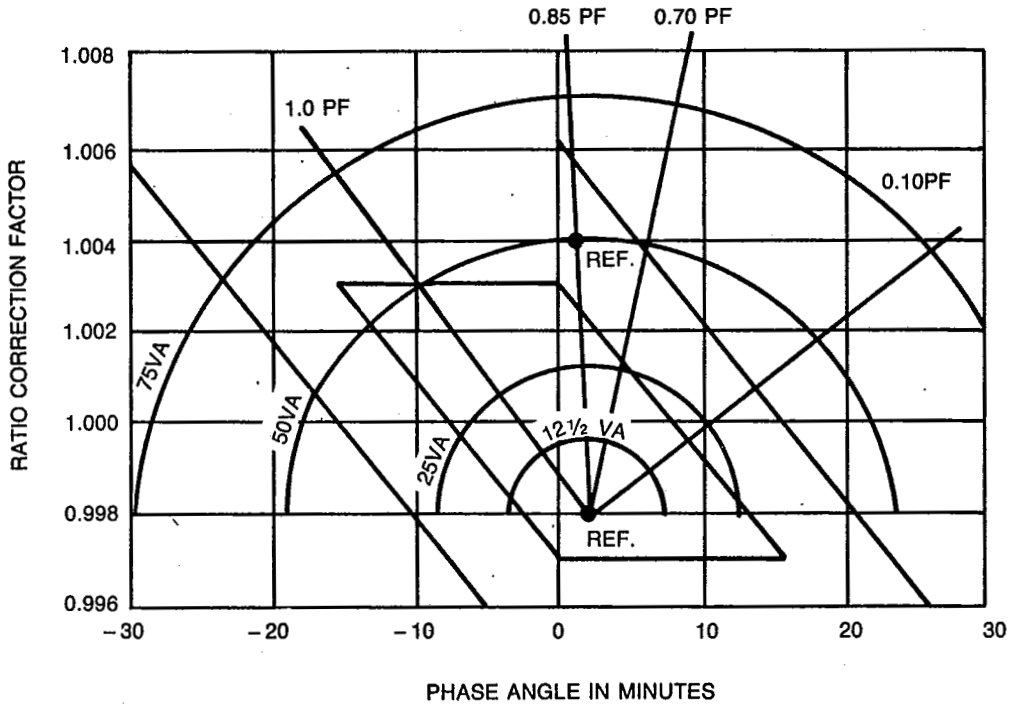

NOTE—REFERENCE POINTS REPRESENTING TWO SETS OF GIVEN PERFORMANCE DATA ARE PLOTTED ON THE GRID. POINTS ON THE LINE CONNECTING THE TWO GIVEN BURDENS REPRESENT PERFORMANCE AT VARIOUS BURDENS WITH THE SAME POWER FACTOR.

Figure A-1
CIRCLE METHOD
FOR DETERMINATION OF VOLTAGE TRANSFORMER ACCURACY

Copyright National Electrical Manufacturers Association
Provided by IHS under license with NEMA
No reproduction or networking permitted without license from IHS
Not for Resale

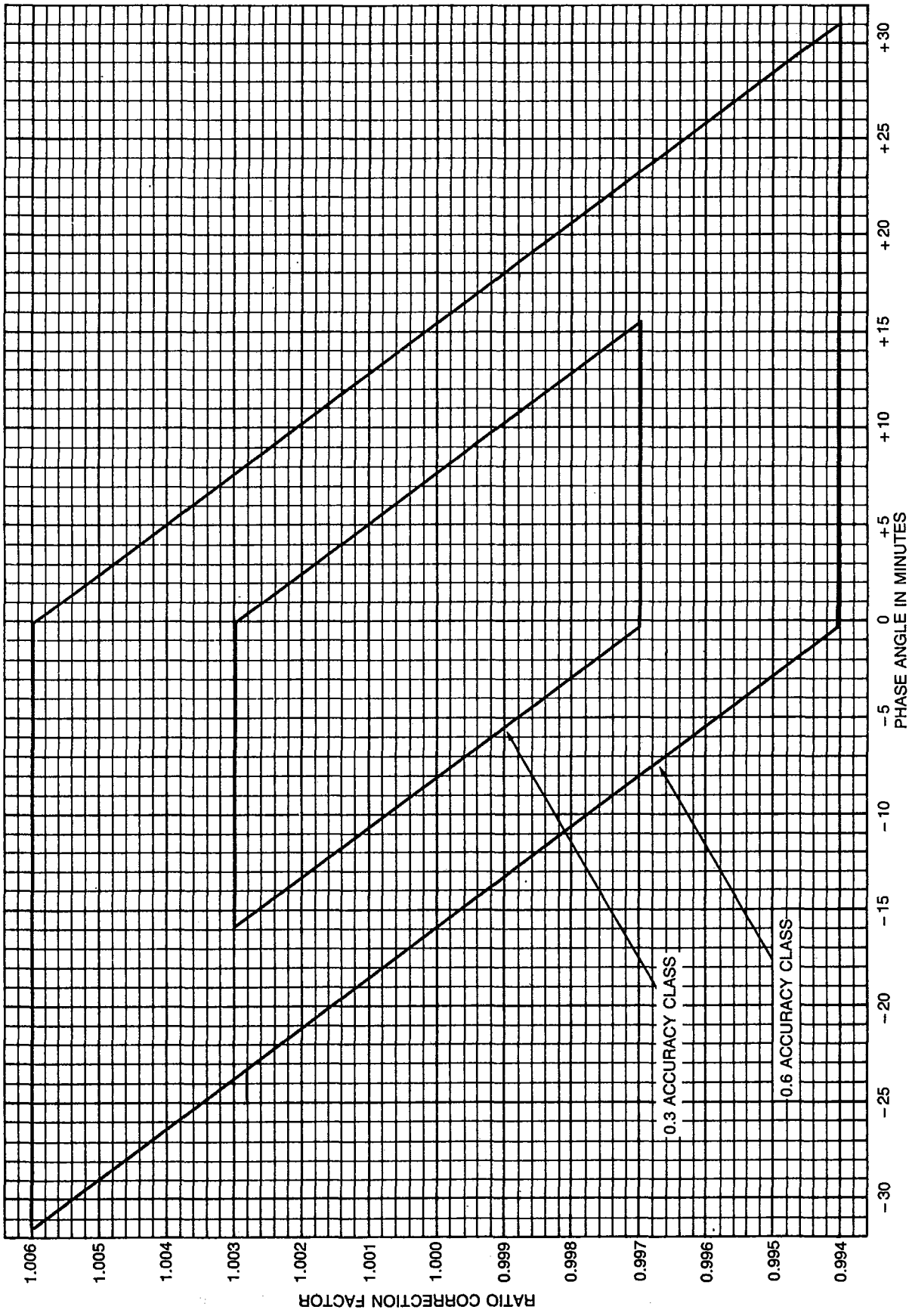

SAMPLE OF GRAPH PAPER SPECIFICALLY SCALED FOR VOLTAGE TRANSFORMER CIRCLE DIAGRAM

Figure A-2

Copyright National Electrical Manufacturers Association
Provided by IHS under license with NEMA
No reproduction or networking permitted without license from IHS
Not for Resale

NEMA STANDARDIZATION

The purpose of NEMA Standards, their classification and status are set forth in certain clauses of the NEMA Bylaws, which are quoted below:

Purpose of Standards

National Electrical Manufacturers Association Standards are adopted in the public interest and are designed to eliminate misunderstandings between the manufacturer and the purchaser and to assist the purchaser in selecting and obtaining the proper product for its particular need. Existence of a National Electrical Manufacturers Association Standard does not in any respect preclude any member or nonmember from manufacturing or selling products not conforming to the standard.

(Bylaw—Art. V, Sec. 1)

Definition of a Standard

A standard of the National Electrical Manufacturers Association defines a product, process or procedure with reference to one or more of the following: nomenclature, composition, construction, dimensions, tolerances, safety, operating characteristics, performance, rating, testing, and the service for which they are designed.

(Bylaw—Art. V, Sec. 2, Subsection A)

Dimensions

Where dimensions are given for interchangeability purposes, alternate dimensions satisfying the other provisions of the standards publication may be capable of otherwise equivalent performance.

(NEMA Policy Memorandum 84-2, dated June 7, 1984)

Classes of Standards

National Electrical Manufacturers Association Standards are of two classes:

1. NEMA Standard, which relates to a product commercially standardized and subject to repetitive manufacture, which standard has been approved by at least 90 percent of the members of the Subdivision eligible to vote thereon;
2. Suggested Standard for Future Design, which may not have been regularly applied to a commercial product, but which suggests a sound engineering approach to future development, which standard has been approved by at least two-thirds of the members of the Subdivision eligible to vote thereon.

(Bylaw—Art. V, Sec. 2, Subsection B)

Authorized Engineering Information

Authorized Engineering Information consists of explanatory data and other engineering information of an informative character not falling within the classification of NEMA Standard or Suggested Standard for Future Design.

(Bylaw—Art. V, Sec. 6, 1st Sentence)

Official Standards Proposal

An Official Standards Proposal is an official draft of a proposed standard which is formally recommended to an outside organization(s) for consideration, comment and/or approval.

(Bylaw—Art. V, Sec. 4, Subsection A)

Identification of Status

Standards in NEMA Standards Publications are identified in the foreword or following each standard as "NEMA Standard" or "Suggested Standard for Future Design." These indicate the status of the standard. These words are followed by a date which indicates when the standard was adopted in its present form by the Association.

The material identified as "Authorized Engineering Information" and "Official Standards Proposal" is designated similarly.

Copyright National Electrical Manufacturers Association
Provided by IHS under license with NEMA
No reproduction or networking permitted without license from IHS
Not for Resale

INSTRUMENT TRANSFORMER GROUP

OF THE

ELECTRICAL MEASURING EQUIPMENT SECTION

OF THE

NATIONAL ELECTRICAL MANUFACTURERS ASSOCIATION

MEMBER COMPANIES

Abbott Power Corporation
Abbot Magnetics Division
Buena Park, CA 90621

Astra Corporation
Quincy, MA 02169

Bicron Electronics Co.
Canaan, CT 06018

Duncan Electric Co., Inc.
Lafayette, IN 47903

General Electric Co.
Somerworth, NH 03878

Sangamo Energy Management
Div. of Sangamo Weston Schumberger
Atlanta, GA 30362

Siemens-Allis, Inc.
Raleigh, NC 27626

Square D Company
Palatine, IL 60067

Westinghouse Electric Corp.
Raleigh, NC 27611

Copyright National Electrical Manufacturers Association
Provided by IHS under license with NEMA
No reproduction or networking permitted without license from IHS
Not for Resale