NEMA EI*21.1 93 ■ 6470247 0503882 T95 ■

NEMA STANDARDS PUBLICATION NO. EI 21.1

nema

Instrument Transformers for Revenue Metering (110 kV BIL and Less)

NEMA

NATIONAL ELECTRICAL MANUFACTURERS ASSOCIATION ■ 2101 L STREET, N.W., WASHINGTON, D.C. 20037

Copyright National Electrical Manufacturers Association
Provided by IHS under license with NEMA
No reproduction or networking permitted without license from IHS
Not for Resale

NEMA STANDARDS PUBLICATION NO. EI 21.1-1993

INSTRUMENT TRANSFORMERS FOR REVENUE METERING (110 kV BIL AND LESS)

Reaffirmed with Revisions—January 26, 1993

Published by
National Electrical Manufacturers Association
2101 L Street, N.W. Suite 300
Washington, D.C. 20037-1526

Copyright ©1983 National Electrical Manufacturers Association

Copyright National Electrical Manufacturers Association
Provided by IHS under license with NEMA
No reproduction or networking permitted without license from IHS
Not for Resale

TABLE OF CONTENTS

		Page
	Foreword	i
	Scope	i
Section 1	REFERENCED STANDARDS	1
Section 2	CURRENT TRANSFORMERS	
	Definitions	3
	Standard Ratings	3
	Nameplate	3
	Polarity Marking of Terminals	3
	Secondary Lead Markings	4
	Test Card	4
	Terminals	6
	Space for User Identification Number	6
	Mechanical Constitution	6
	Indoor and Outdoor Current Transformers 110 kV BIL	6
	Indoor Current Transformers, 60 kV BIL through 110 kV BIL	6
	Outdoor Current Transformers, 60 kV BIL through 110 kV BIL	6
Section 3	VOLTAGE TRANSFORMERS	
	Definitions	17
	Primary Voltage Ratings and Basic Impulse Insulation Levels	17
	Standard Ratings	17
	Nameplate	17
	Rated Burden for 0.3 Accuracy Class	17
	Thermal Burden Rating	17
	Test Card	18
	Polarity Marking of Terminals	18
	Terminal Identification	18
	Primary Voltage Identification	18
	Terminals	18
	Space for User Identification Number	18
	Dimensions	18
Appendix A	CIRCLE METHOD FOR DETERMINATION OF VOLTAGE TRANSFORMER ACCURACY	23

Copyright National Electrical Manufacturers Association
Provided by IHS under license with NEMA
No reproduction or networking permitted without license from IHS
Not for Resale

Section 1
REFERENCES

In this Standards Publication, reference is made to the following publication.

Copies are available from:

AMERICAN NATIONAL STANDARDS INSTITUTE
11 West 42nd Street
New York, NY 10036

ANSI/IEEE 57.13-1978(R1987) *American National Standard for Instrument Transformers*

Copyright National Electrical Manufacturers Association
Provided by IHS under license with NEMA
No reproduction or networking permitted without license from IHS

Not for Resale

Copyright National Electrical Manufacturers Association
Provided by IHS under license with NEMA
No reproduction or networking permitted without license from IHS

Not for Resale

Section 2
CURRENT TRANSFORMERS

2.1 Definitions

2.1.1 Accuracy Classes for Metering (Current Transformers)

Limits of a transformer correction factor, in terms of percent error, that have been established to cover specific performance ranges for line power-factor conditions between 1.0 and .06 lag.

2.1.2 Basic Lighting Impulse Insulation Levels (BIL)

A basic lighting impulse insulation level is a specific insulation level expressed in kilovolts of the crest value of a standard lighting impulse (1.2 × 50 microsecond wave).

2.1.3 Burden

The burden of a current transformer is that property of the circuit connected to its secondary winding which determines the active and reactive power at the secondary winding which determines the active and reactive power at the secondary terminals. The burden is expressed either as the total ohms impedance with the effective resistive and reactive components, or as the total volt-amperes and power factor, at the specified value of current and frequency.

2.1.4 Continuous-Thermal-Current Rating Factor (Current Rating Factor) (RF)

The continuous-thermal-current rating factor is the factor by which the rated primary current can be multiplied to obtain the maximum primary current that can be carried continuously without exceeding the limiting temperature rise from a 30°C average ambient air temperature.

2.1.5 Current Transformer

A current transformer is an instrument transformer intended to have its primary winding connected in series with the conductor carrying the current to be measured or controlled. (In window type current transformers, the primary winding is provided by the line conductor and is not an integral part of the transformer.)

2.1.6 Indoor Current Transformer

An indoor current transformer is a current transformer which is constructed for installation indoors where it is protected from the weather.

For an explanation of usual and unusual service conditions, see ANSI/IEEE C57.13.

2.1.7 Outdoor Current Transformer

An outdoor current transformer is a current transformer which is constructed for installation outdoors where it is exposed to the weather.

For explanation of usual and unusual service conditions, see ANSI/IEEE C57.13.

2.1.8 Primary Winding

The primary winding of a current transformer is the winding intended to be on the energy input side.

2.1.9 Secondary Winding

The secondary winding of a current transformer is the winding intended to be connected to the measuring or control devices.

2.2 STANDARD RATING

a. The frequency rating shall be 60 Hertz.
b. The standard accuracy class for current transformers and the corresponding limits of transformer correction factor shall be as shown in Table 2-1.
   The relationship between the limits of ratio correction factors and phase angles for the limiting values of transformer correction factors is shown in Figure 2-1.
c. The standard metering burdens shall be as shown in Table 2-2.
d. The standard continuous-thermal-current rating factor for a current transformer shall be 1.0, 1.33, 1.5, 2.0, 3.0, or 4.0.

2.3 NAMEPLATE

Current transformers shall be provided with nameplates which will include, as a minimum, the following information:

a. Manufacturer's name or trademark.
b. Manufacturer's type.
c. Manufacturer's serial number (SER) numerals only.
d. Rated primary and secondary amperes.
e. Nominal system voltage (NSV).
f. Basic lighting impulse insulation level (BIL ____ kV).
g. Rated frequency (Hz).
h. Current rating factor (RF).
i. Accuracy ratings (standard burdens at which the transformers meets 0.3 accuracy class).

2.4 POLARITY MARKING OF TERMINALS

The relative instantaneous polarity of the primary and secondary terminals shall be clearly indicated by permanent markings that cannot be obliterated easily.

When the polarity is indicated by letters, the letter H shall be used to indicate the primary terminals and the letter X shall be used to indicate the secondary terminals. H1 and X1 shall be of the same polarity.

Copyright National Electrical Manufacturers Association
Provided by IHS under license with NEMA
No reproduction or networking permitted without license from IHS
Not for Resale

2.5 SECONDARY LEAD MARKINGS FOR CURRENT TRANSFORMERS INTENDED FOR DIRECT BURIAL

When single ratio current transformers, intended for direct burial, have integral leads over 24 inches long, then:

a. The full length of the polarity lead shall be identified.
b. The secondary leads shall identify the rated primary current of the transformer.
c. The identification interval shall not exceed 12 inches.

2.6 TEST CARD

Current transformers shall be provided with a certificate of test, approximately 3 × 5 inches in dimension, which shall include, as a minimum, the following information:

a. Manufacturer's name or trademark.
b. Manufacturer's type.
c. Manufacturer's serial number.
d. Space for User Identification Number.
e. Rated primary and secondary amperes.
f. Factor accuracy test readings at 100 percent and 10 percent of rated primary current at the maximum standard burden for 0.3 accuracy class.

Table 2-1
STANDARD ACCURACY CLASS FOR CURRENT TRANSFORMERS

	Limits of Transformer Correction Factor				
	100% Rated Current*		10% Rated Current		Limits of Power Factor (Lagging) of Metered Power Load
Accuracy Class	Minimum	Maximum	Minimum	Maximum	
0.3	0.997	1.003	0.994	1.006	0.6–1.0

*These limits also apply at the maximum continuous current (continuous-current rating factor multiplied by the rated primary current).

Table 2-2
STANDARD BURDEN FOR CURRENT TRANSFORMERS WITH 5 AMPERE SECONDARIES

Standard Burden Designation*	Resistance Ohms	Inductance, Millihenrys	Impedance, Ohms	Volt-Amperes (at 5 amps)	Power Factor
B-0.1	0.09	0.116	0.1	2.5	0.9
B-0.2	0.18	0.232	0.2	5.0	0.9
B-0.5	0.45	0.580	0.5	12.5	0.9
B-0.9	0.81	1.04	0.9	22.5	0.9
B-1.8	1.62	2.08	1.8	45	0.9

*These standard burden designations have no significance at frequencies other than 60 Hz.

Copyright National Electrical Manufacturers Association
Provided by IHS under license with NEMA
No reproduction or networking permitted without license from IHS
Not for Resale

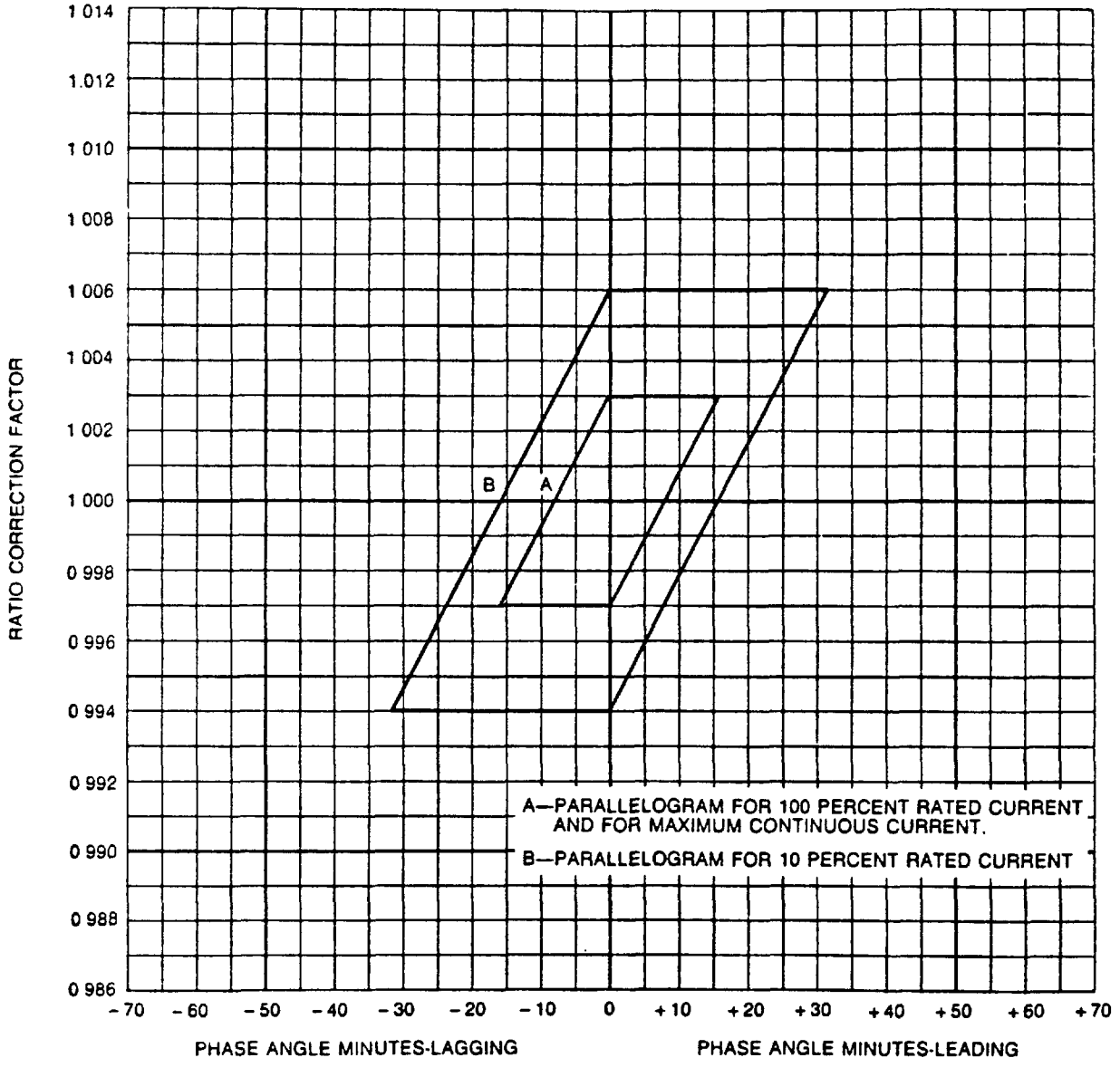

Figure 2-1
0.3 ACCURACY CLASS LIMITS FOR CURRENT TRANSFORMERS

Copyright National Electrical Manufacturers Association
Provided by IHS under license with NEMA
No reproduction or networking permitted without license from IHS

Not for Resale

g. Date of factory accuracy test.
h. Initials of factory accuracy tester. (Unless tested automatically).

2.6 TERMINALS

2.6.1 Primary Terminals

Primary terminals of wound- and bar-type current transformers shall be electrically and mechanically suitable for use with either copper or aluminum conductors.

2.6.2 Secondary Terminals

Secondary terminals shall be electrically and mechanically suitable for use with copper stranded or solid conductors from No. 14 to No. 8 AWG.

2.6.3 Voltage Terminals

Voltage terminals, when required, shall be electrically and mechanically suitable for use with copper stranded or solid conductors from No. 14 to No. 8 AWG.

2.7 SPACE FOR USER IDENTIFICATION NUMBER

A space 2 to 2-3/4 inches long shall be provided for holding a 1/2 inch wide badge or for marking the user identification number.

2.8 MECHANICAL CONSTRUCTION

Current transformers shall be classified as to their physical construction, as follows:

a. Wound (wound-primary) type.
b. Bar-type
c. Window-type

2.9 INDOOR AND OUTDOOR CURRENT TRANSFORMER, 10 kV BIL

2.9.1 Electrical Characteristics and Dimensions

The minimum electrical characteristics, the dimensions, and the maximum envelope, including the base, body, and secondary terminal covers shall be as shown in Figures 2-2 through 2-10.

2.10 INDOOR CURRENT TRANSFORMERS, 60 kV BIL THROUGH 110 kV BIL

2.10.1 Basic Lighting Impulse Insulation Levels

The basic lighting impulse insulation levels (BIL) for these classes shall be 60, 75, 95, and 110 kV.

2.10.2 Electrical Characteristics and Dimensions

The minimum electrical characteristics, the dimensions, and the maximum envelope, including the base, body, and secondary terminal covers shall be as shown in Figure 2-10.

2.10.3 Current Ratings (Indoor Current Transformers, 60 kV BIL–110 kV BIL)

The current ratings, in amperes, shall be:

10:5	50:5	200:5	800:5
15:5	75:5	300:5	1200:5
25:5	100:5	400:5	1500:5
40:5	150:5	600:5	2000:5

2.11 OUTDOOR CURRENT TRANSFORMERS, 60 kV BIL THROUGH 110 kV BIL

2.11.1 Basic Lighting Impulse Insulation Levels

The basic lighting impulse insulation levels (BIL) for these classes shall be 60, 75, 95, and 110 kV.

2.11.2 Electrical Characteristics and Dimensions

The minimum electrical characteristics, the dimensions, and the maximum envelope, including the base, body, secondary terminal covers and secondary conduit boxes, shall be as shown in Figure 2-11.

2.11.3 Current Ratings (Outdoor Current Transformers, 60 kV BIL–110 kV BIL)

The current ratings, in amperes, shall be:

10:5	50:5	150:5	400:5
15:5	75:5	200:5	500:5
25:5	100:5	300:5	800:5
40:5			1200:5

Copyright National Electrical Manufacturers Association
Provided by IHS under license with NEMA
No reproduction or networking permitted without license from IHS
Not for Resale

MINIMUM ELECTRICAL CHARACTERISTICS

CURRENT RATING, AMPERES	CURRENT RATING FACTOR	ACCURACY CLASS AND BURDENS		MINIMUM WINDOW DIAMETER "A", INCHES
		B-0.1	B-0.2	
200:5	2.0	0.3	0.3	1 3/16
400:5	2.0	0.3	0.3	1 1/2

DIMENSIONS:

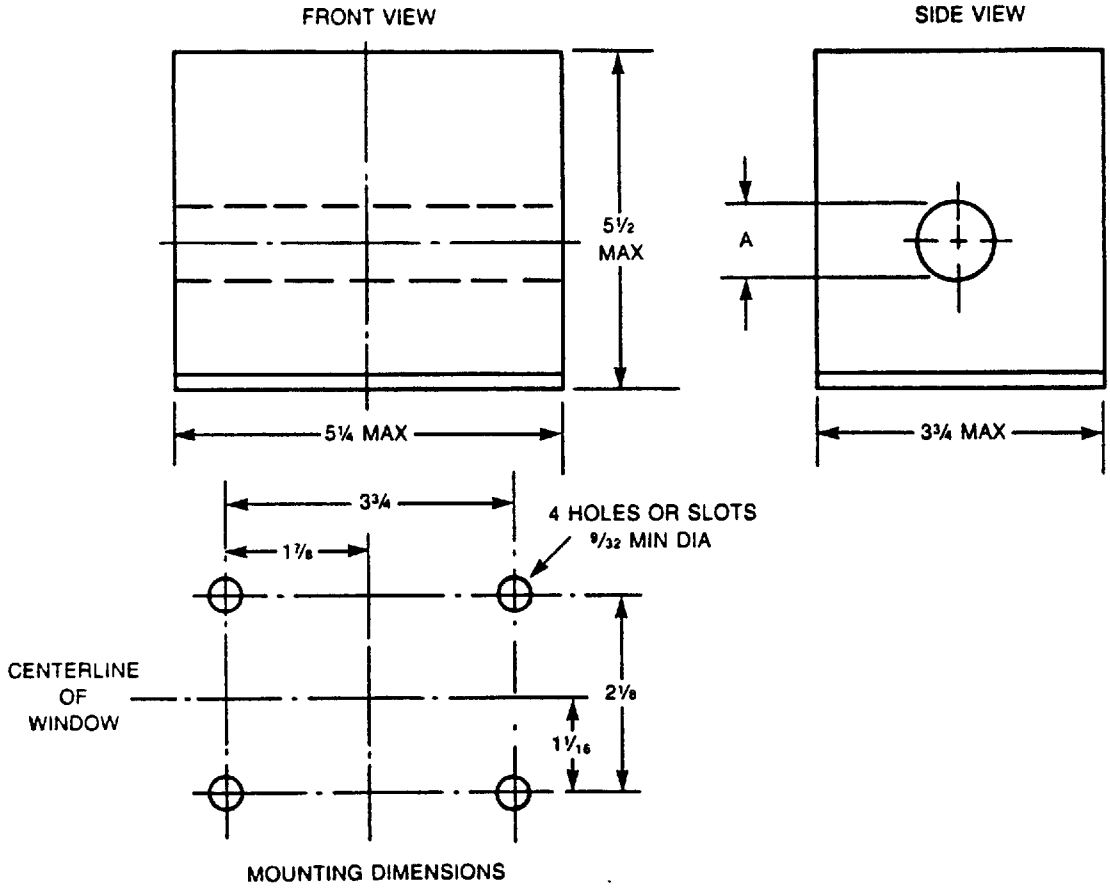

ALL DIMENSIONS IN INCHES
UNLESS OTHERWISE INDICATED, THE TOLERANCE IS PLUS OR MINUS 1/16 INCH.

Figure 2-2
SMALL-SIZE WINDOW-TYPE CURRENT TRANSFORMERS, 10 kV BIL

Copyright National Electrical Manufacturers Association
Provided by IHS under license with NEMA
No reproduction or networking permitted without license from IHS
Not for Resale

MINIMUM ELECTRICAL CHARACTERISTICS

CURRENT RATING, AMPERES	CURRENT RATING FACTOR	ACCURACY CLASS AND BURDENS			CABLE DIAMETER OVER INSULATION, INCHES (SEE NOTE)	
		B-0.1	B-0.2	B-0.5	ONE CABLE	TWO CABLES (EACH)
200:5	2.0	0.3	0.3	...	1¾	1⅛
400:5	2.0	0.3	0.3	0.3	1¾	1¼
500:5	2.0	0.3	0.3	0.3	1¾	1¼
600:5	2.0	0.3	0.3	0.3	1¾	1¼
800:5	2.0	0.3	0.3	0.3	1¾	1¼

DIMENSIONS:

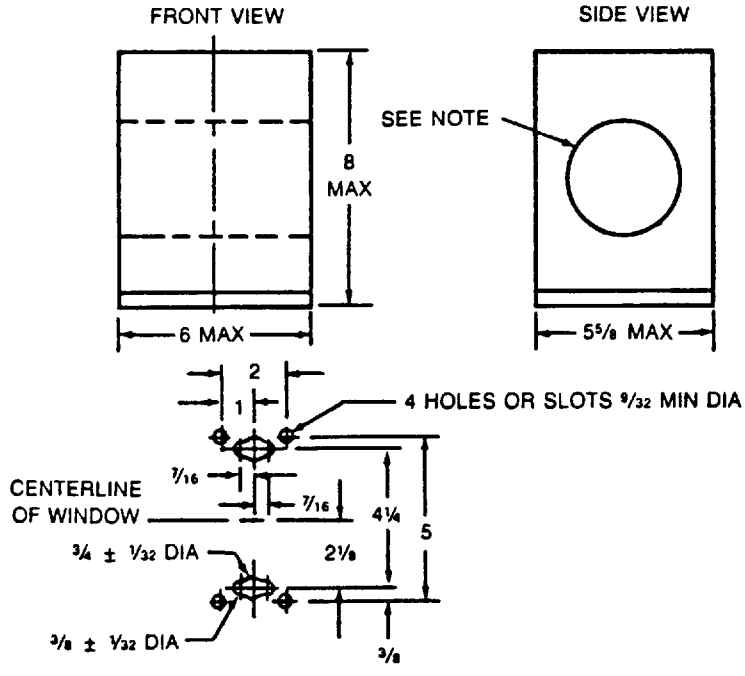

MOUNTING DIMENSIONS

ALL DIMENSIONS IN INCHES.
UNLESS OTHERWISE INDICATED, THE TOLERANCE IS PLUS OR MINUS 1/16 INCH.

NOTE: WINDOW MAY BE OF ANY SHAPE BUT SHALL BE OF SUITABLE DIMENSIONS TO ACCEPT ONE-CABLE AND TWO-CABLE INSTALLATIONS AS SHOWN IN THE TABLE

Figure 2-3
INTERMEDIATE-SIZE WINDOW-TYPE CURRENT TRANSFORMERS, 10 kV BIL

Copyright National Electrical Manufacturers Association
Provided by IHS under license with NEMA
No reproduction or networking permitted without license from IHS
Not for Resale

MINIMUM ELECTRICAL CHARACTERISTICS

CURRENT RATING, AMPERES	CURRENT RATING FACTOR	ACCURACY CLASS AND BURDENS		
		B-0.1	B-0.2	B-0.5
800:5	2.0	0.3	0.3	0.3
1000:5	1.5	0.3	0.3	0.3
1200:5	1.5	0.3	0.3	0.3
1500:5	1.5	0.3	0.3	0.3
2000:5	1.5	0.3	0.3	0.3
3000:5	1.33	0.3	0.3	0.3
4000:5	1.33	0.3	0.3	0.3
6000:5	1.0	0.3	0.3	0.3

DIMENSIONS:

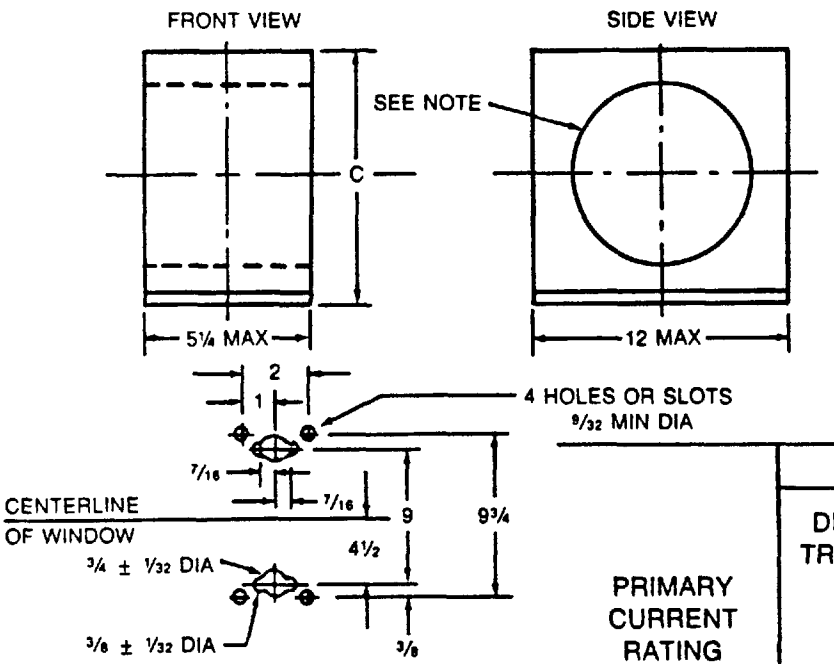

MOUNTING DIMENSIONS FOR SIZE I
(SIZE II IS NOT USUALLY BASE MOUNTED)

PRIMARY CURRENT RATING	DIMENSIONS-INCHES	
	DIMENSION C TRANSFORMER MAXIMUM HEIGHT, INCHES	SQUARE BUS MINIMUM DIAGONAL
SIZE I-UP TO 4000	12	5⅜
SIZE II 2000 TO 6000	13½	8⅛

ALL DIMENSIONS IN INCHES.
UNLESS OTHERWISE INDICATED, THE TOLERANCE IS PLUS OR MINUS 1/16 INCH.

NOTE: WINDOW MAY BE OF ANY SHAPE BUT SHALL ACCEPT A BUS STRUCTURE AS SHOWN IN THE TABLE.

Figure 2-4
LARGE-SIZE WINDOW-TYPE CURRENT TRANSFORMERS, 10 kV BIL

Copyright National Electrical Manufacturers Association
Provided by IHS under license with NEMA
No reproduction or networking permitted without license from IHS
Not for Resale

MINIMUM ELECTRICAL CHARACTERISTICS

CURRENT RATING, AMPERES	CURRENT RATING FACTOR	ACCURACY CLASS AND BURDENS		
		B-0.1	B-0.2	B-0.5
800:5	2.0	0.3	0.3	0.3
1000:5	1.5	0.3	0.3	0.3
1200:5	1.5	0.3	0.3	0.3
1500:5	1.5	0.3	0.3	0.3
2000:5	1.5	0.3	0.3	0.3
3000:5 (SIZE I)	1.33	0.3	0.3	0.3
3000:5 (SIZE II)	1.33	0.3	0.3	0.3
4000:5	1.5	0.3	0.3	0.3
6000:5	1.0	0.3	0.3	0.3

DIMENSIONS:

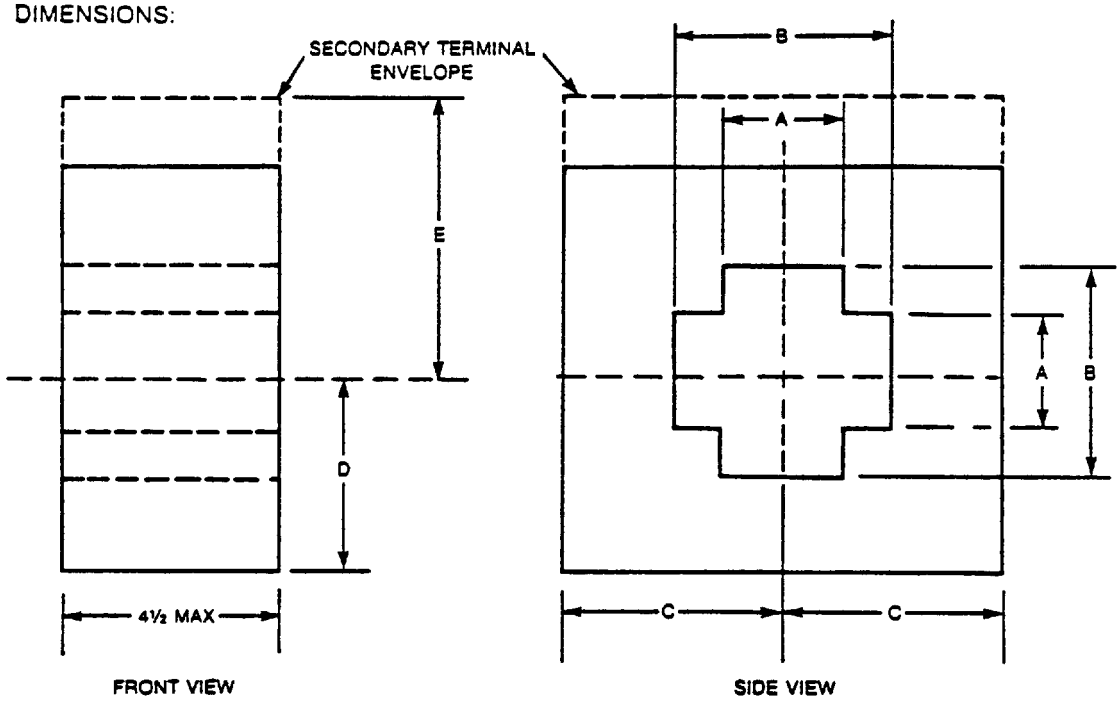

PRIMARY CURRENT RATING	DIMENSION A		DIMENSION B		DIMENSION C	DIMENSION D	DIMENSION E
	MINIMUM	MAXIMUM	MINIMUM	MAXIMUM	MAXIMUM	MAXIMUM	MAXIMUM
SIZE I-UP TO 3000 AMPERES	2 9/16	2½	4 5/16	4½	4¼	4½	6¼
SIZE II-2000 TO 6000 AMPERES	3 9/16	3½	5 5/16	5½	5¾	5¾	7¼

ALL DIMENSIONS IN INCHES.
UNLESS OTHERWISE INDICATED, THE TOLERANCE IS PLUS OR MINUS 1/16 INCH.

Figure 2-5
LARGE-SIZE WINDOW-TYPE CURRENT TRANSFORMERS, 10 kV BIL

Copyright National Electrical Manufacturers Association
Provided by IHS under license with NEMA
No reproduction or networking permitted without license from IHS
Not for Resale

MINIMUM ELECTRICAL CHARACTERISTICS

CURRENT RATING, AMPERES	CURRENT RATING FACTOR	ACCURACY CLASS AND BURDENS		DIMENSION A, INCHES	
		B-0.1	B-0.2	MINIMUM	MAXIMUM
200:5	2.0	0.3	0.3	1¼	2
400:5	2.0	0.3	0.3	1½	2½
600:5	2.0	0.3	0.3	2	3
800:5	1.5	0.3	0.3	2¼	3

DIMENSIONS:

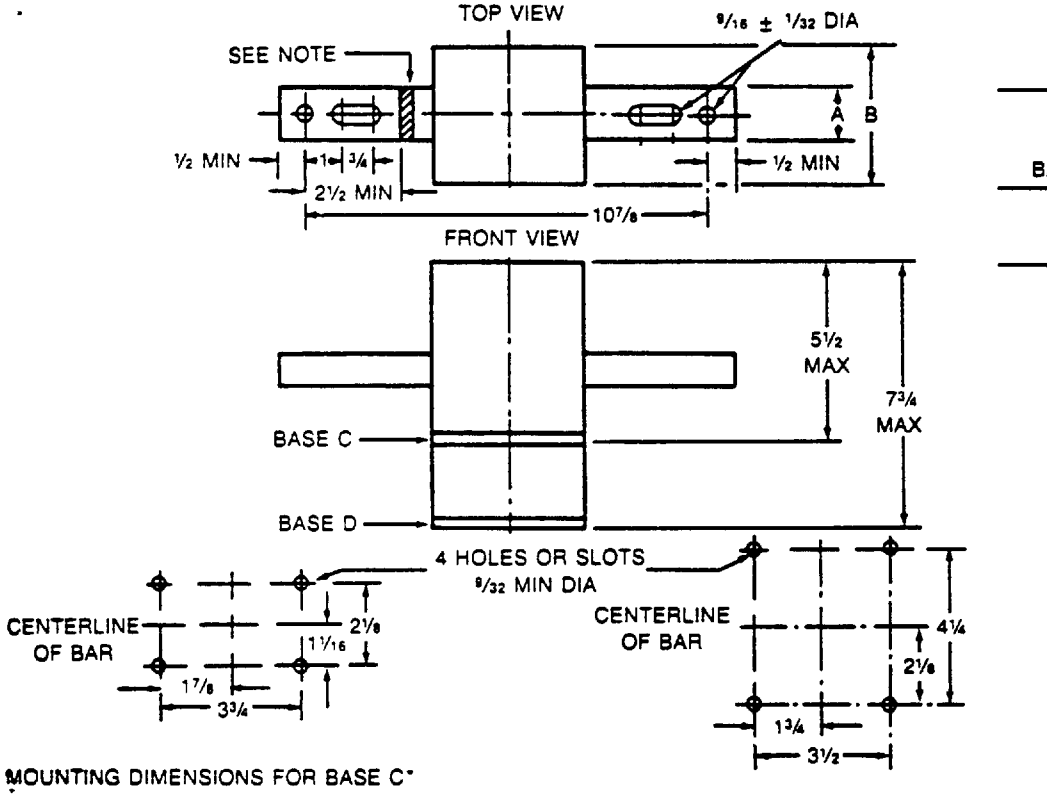

BASE*	DIMENSION B MAXIMUM, INCHES
C	3¾
D	5⅝

MOUNTING DIMENSIONS FOR BASE C*

MOUNTING DIMENSIONS FOR BASE D*

*THE TRANSFORMERS SHALL BE PROVIDED WITH EITHER BASE C OR D.

ALL DIMENSIONS IN INCHES.
UNLESS OTHERWISE INDICATED, THE TOLERANCE IS PLUS OR MINUS 1/16 INCH.

NOTE: VOLTAGE TERMINAL, ON PRIMARY BAR ON POLARITY SIDE ONLY, MAY BE LOCATED ANYWHERE IN THE SHADED AREA SHOWN, PREFERABLY TOWARD THE SECONDARY TERMINALS.

Figure 2-6
SMALL-SIZE WOUND OR BAR-TYPE CURRENT TRANSFORMERS, 10 kV BIL

Copyright National Electrical Manufacturers Association
Provided by IHS under license with NEMA
No reproduction or networking permitted without license from IHS
Not for Resale

MINIMUM ELECTRICAL CHARACTERISTICS

CURRENT RATING, AMPERES	CURRENT RATING FACTOR	ACCURACY CLASS AND BURDENS			DIMENSION A, INCHES	
		B-0.1	B-0.2	B-0.5	MINIMUM	MAXIMUM
200:5	2.0	0.3	0.3	...	1½	2
400:5	2.0	0.3	0.3	0.3	1½	2½
500:5	2.0	0.3	0.3	0.3	2	3
600:5	2.0	0.3	0.3	0.3	2	3
800:5	2.0	0.3	0.3	0.3	2¼	3

DIMENSIONS:

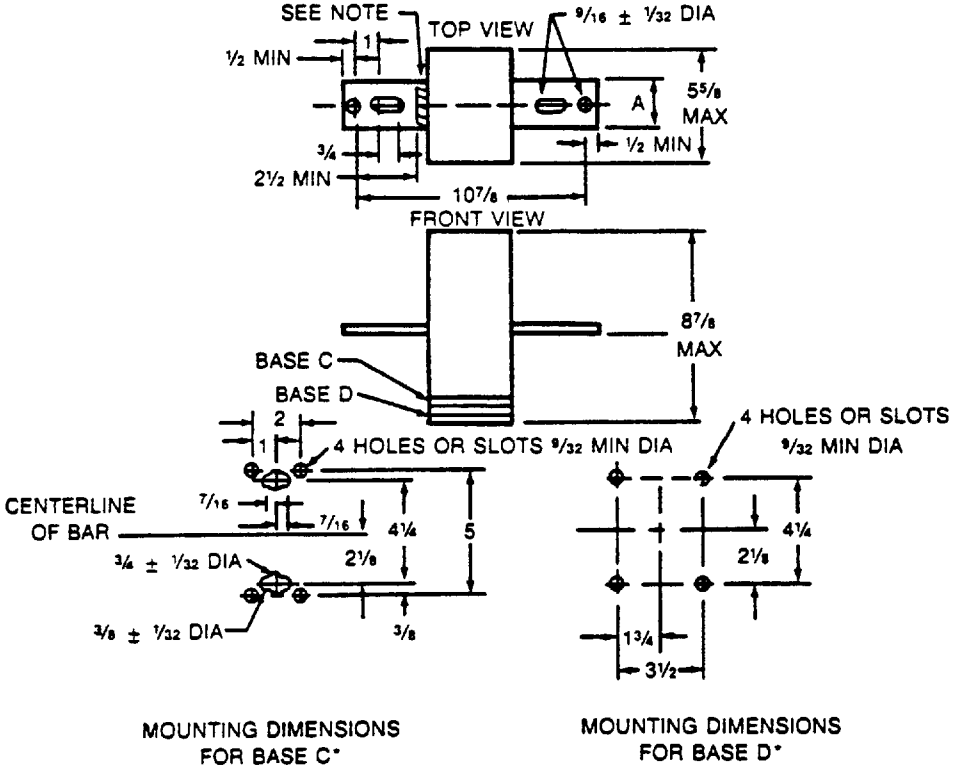

MOUNTING DIMENSIONS FOR BASE C*

MOUNTING DIMENSIONS FOR BASE D*

*THE TRANSFORMERS SHALL BE PROVIDED WITH EITHER BASE C OR D.

ALL DIMENSIONS IN INCHES.
UNLESS OTHERWISE INDICATED, THE TOLERANCE IS PLUS OR MINUS 1/16 INCH.

NOTE: VOLTAGE TERMINAL, ON PRIMARY BAR ON POLARITY SIDE ONLY, MAY BE LOCATED ANYWHERE IN THE SHADED AREA SHOWN, PREFERABLY TOWARD THE SECONDARY TERMINALS.

Figure 2-7
INTERMEDIATE-SIZE WOUND OR BAR-TYPE CURRENT TRANSFORMERS, 10 kV BIL

Copyright National Electrical Manufacturers Association
Provided by IHS under license with NEMA
No reproduction or networking permitted without license from IHS
Not for Resale

MINIMUM ELECTRICAL CHARACTERISTICS

CURRENT RATING, AMPERES	CURRENT RATING FACTOR	ACCURACY CLASS AND BURDENS B-0.1	B-0.2	B-0.5
800:5	2.0	0.3	0.3	0.3
1000:5	1.5	0.3	0.3	0.3
1200:5	1.5	0.3	0.3	0.3
1500:5	1.5	0.3	0.3	0.3
2000:5	1.5	0.3	0.3	0.3
3000:5	1.33	0.3	0.3	0.3
4000:5	1.0	0.3	0.3	0.3

DIMENSIONS:

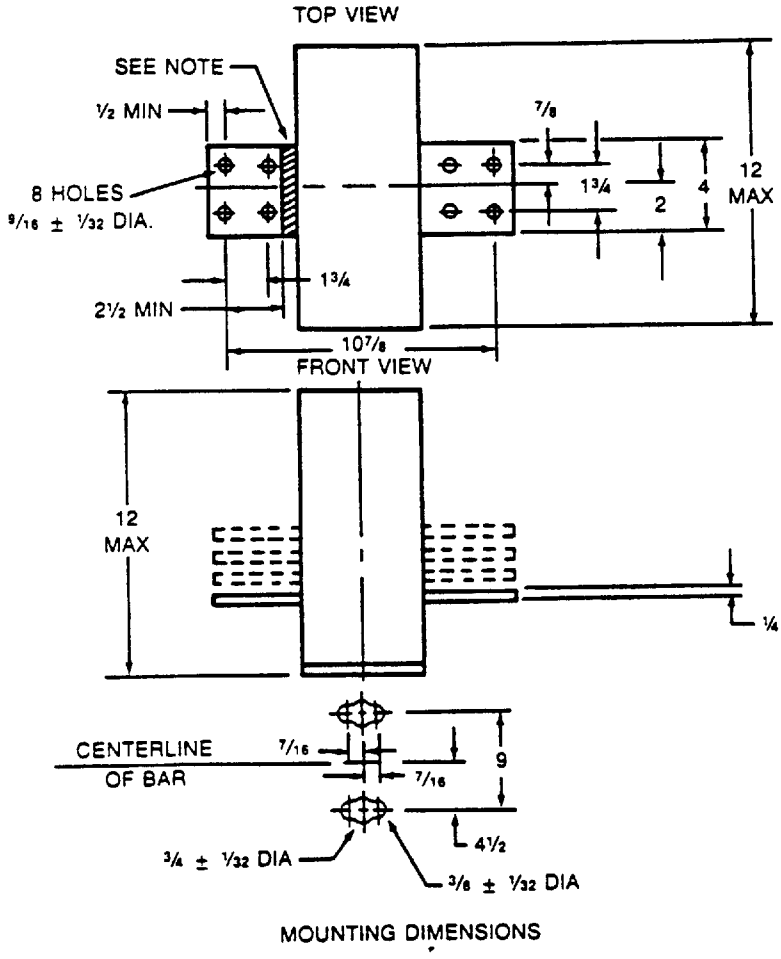

MOUNTING DIMENSIONS

ALL DIMENSIONS IN INCHES. UNLESS OTHERWISE INDICATED, THE TOLERANCE SHALL BE PLUS OR MINUS 1/16 INCH. ON MULTI-BAR ASSEMBLIES BARS SHALL BE ¼ INCH THICK AND THERE SHALL BE A ¼ INCH SPACING BETWEEN BARS.

NOTE: VOLTAGE TERMINALS, ON PRIMARY BAR ON POLARITY SIDE ONLY, SHALL BE PERMITTED TO BE LOCATED ANYWHERE IN THE SHADED AREA SHOWN, PREFERABLY TOWARD THE SECONDARY TERMINALS.

Figure 2-8
LARGE-SIZE BAR-TYPE CURRENT TRANSFORMERS, 10 kV BIL

Copyright National Electrical Manufacturers Association
Provided by IHS under license with NEMA
No reproduction or networking permitted without license from IHS
Not for Resale

MINIMUM ELECTRICAL CHARACTERISTICS

CURRENT RATING, AMPERES	CURRENT RATING FACTOR	ACCURACY CLASS AND BURDENS			MINIMUM WINDOW DIMENSION (SEE NOTE)	
		B-0.1	B-0.2	B-0.5	A	B
400:5	2.0	0.3	0.3	...	3½	½
500:5	2.0	0.3	0.3	...	3½	½
600:5	2.0	0.3	0.3	...	3½	½
800:5	2.0	0.3	0.3	0.3	3½	½
1000:5	2.0	0.3	0.3	0.3	4	¾
1200:5	1.5	0.3	0.3	0.3	4	¾
1500:5	1.5	0.3	0.3	0.3	4	¾
2000:5	1.5	0.3	0.3	0.3	4	¾
3000:5	1.0	0.3	0.3	0.3	4	¾

DIMENSIONS:

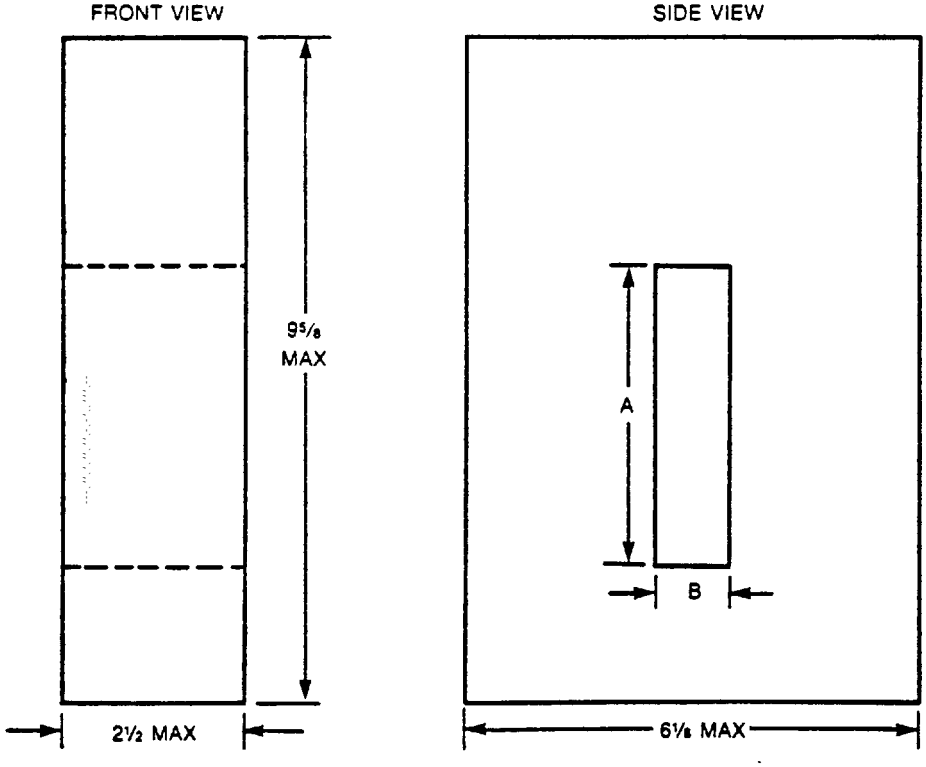

ALL DIMENSIONS IN INCHES.

NOTE: WINDOW MAY BE OF ANY SHAPE BUT SHALL BE OF SUITABLE DIMENSIONS TO ACCEPT RECTANGULAR BUS WITH DIMENSIONS "A" AND "B".

Figure 2-9
WINDOW TYPE CURRENT TRANSFORMERS, 10 kV BIL FOR APPLICATION IN SECONDARY COMPARTMENT OF PAD-MOUNTED DISTRIBUTION TRANSFORMERS

Copyright National Electrical Manufacturers Association
Provided by IHS under license with NEMA
No reproduction or networking permitted without license from IHS
Not for Resale

MINIMUM ELECTRICAL CHARACTERISTICS

CURRENT RATING, AMPERES	CURRENT RATING FACTOR	ACCURACY CLASS AND BURDENS		
		B-0.1	B-0.2	B-0.5
10:5 THROUGH 400:5	1.5	0.3	0.3	0.3
600:5	1.33	0.3	0.3	0.3
800:5 THROUGH 2000:5	1.0	0.3	0.3	0.3

DIMENSIONS:

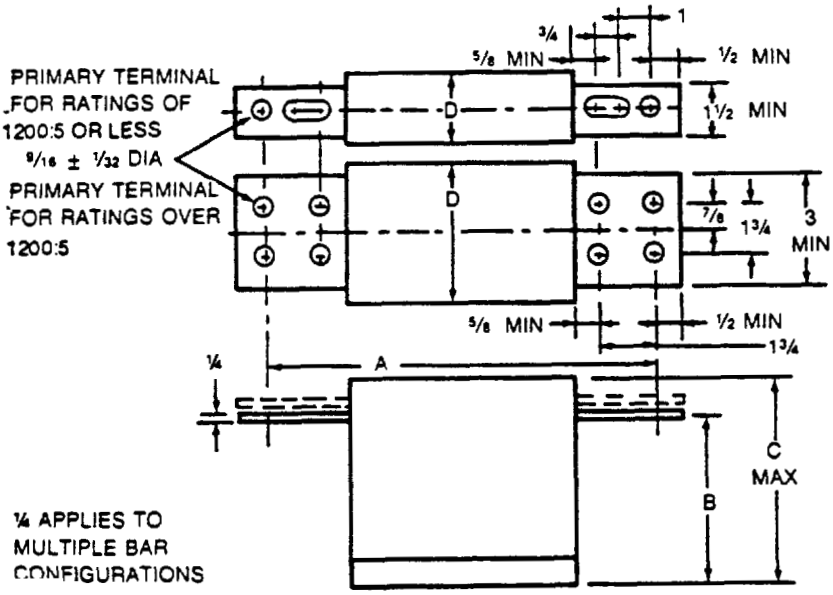

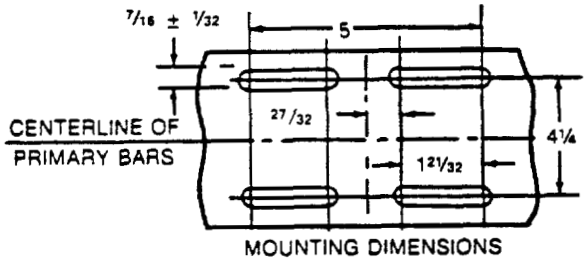

MOUNTING DIMENSIONS

BIL kV	DIMENSION A		TOLERANCE ± 1/8 DIMENSION B		DIMENSION C MAXIMUM		DIMENSION D MAXIMUM	
	10-800 AMPERES	1200-2000 AMPERES	10-800 AMPERES	1200-2000 AMPERES	10-800 AMPERES	1200-2000 AMPERES	10-800 AMPERES	1200-2000 AMPERES
60	14	14	5¾	5¾	8	13	6¼	11
75	15	15	8	5¾	10½	13	7	11
95 & 110	22	26	9	5¾	11¼	13	7	11

ALL DIMENSIONS IN INCHES. UNLESS OTHERWISE INDICATED, THE TOLERANCE IS PLUS OR MINUS 1/16 INCH. ON MULTI-BAR ASSEMBLIES BARS SHALL BE ¼ INCH THICK AND THERE SHALL BE A ¼ INCH SPACING BETWEEN BARS.

Figure 2-10
INDOOR CURRENT TRANSFORMERS, 60 kV BIL THROUGH 110 kV BIL

Copyright National Electrical Manufacturers Association
Provided by IHS under license with NEMA
No reproduction or networking permitted without license from IHS
Not for Resale

MINIMUM ELECTRICAL CHARACTERISTICS

CURRENT RATING, AMPERES	CURRENT RATING FACTOR	ACCURACY CLASS AND BURDENS		
		B-0.1	B-0.2	B-0.5
10:5 THROUGH 400:5	1.5	0.3	0.3	0.3
600:5	1.33	0.3	0.3	0.3
800:5	1.0	0.3	0.3	0.3
1200:5	1.0	0.3	0.3	0.3

DIMENSIONS:

WITHOUT MOUNTING BRACKETS

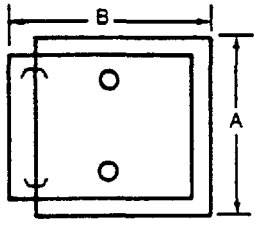

AT LEAST 2 OPENINGS FOR 1-INCH CONDUIT

WITH MOUNTING BRACKETS

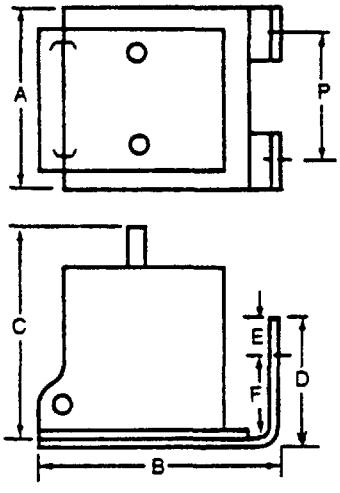

4 HOLES OR SLOTS 7/16 DIA

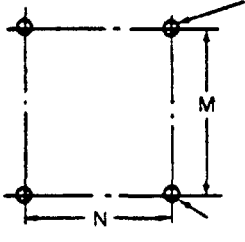

MOUNTING DIMENSIONS

MOUNTING BRACKET DIMENSIONS

60 kV BIL
75 kV BIL
110 kV BIL
(SIZE B)

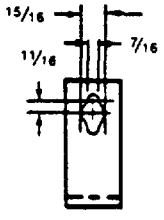

110 kV BIL
(SIZE A)

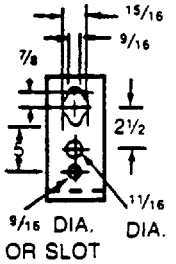

PRIMARY TERMINALS

AMPERE RATING	MINIMUM WIDTH	MINIMUM THICKNESS
10 THROUGH 150	1 1/2	3/16
200, 300 AND 400	2	1/4
600 THROUGH 1200	2	3/8

BIL kV	WITHOUT MOUNTING BRACKETS MAXIMUM OVERALL DIMENSIONS			MOUNTING DIMENSIONS		WITH MOUNTING BRACKETS MAXIMUM OVERALL DIMENSIONS				MOUNTING DIMENSIONS		
	A	B	C	M	N	A	B	C	D	E	F	P
60	9 1/2	11 1/2	12 1/2	8 1/2	6 1/4	9 1/2	13 1/2	13 1/4	6 1/2	1 7/8	3 3/4	7 5/8
75	9 1/2	11 1/2	12 1/2	8 1/2	6 1/4	9 1/2	13 1/4	13 1/4	6 1/2	1 7/8	3 3/4	7 5/8
110 (SIZE A)	11	13 1/2	16	10	8 5/8	11	17 3/4	18 1/2	12 1/2	1 7/8	7 7/8	8 7/8
110 (SIZE B)	11	13 1/2	16	8 1/2	6 1/4	11	17 3/4	18 1/2	12 1/2	1 7/8	3 3/4	7 5/8

ALL DIMENSIONS IN INCHES. TOLERANCE ON DIAMETERS OF HOLES, SLOTS AND KEYHOLES IS PLUS OR MINUS 1/32 INCH. UNLESS OTHERWISE INDICATED, OTHER TOLERANCES ARE PLUS OR MINUS 1/16 INCH.

Figure 2-11
OUTDOOR CURRENT TRANSFORMERS, 60 kV BIL THROUGH 110 kV BIL

Copyright National Electrical Manufacturers Association
Provided by IHS under license with NEMA
No reproduction or networking permitted without license from IHS
Not for Resale

Section 3
VOLTAGE TRANSFORMERS

3.1 Definitions

3.1.1 Accuracy Classes for Metering (Voltage Transformers)

Accuracy classes for metering are the limits of a transformer correction factor, in terms of percent error, that have been established to cover specific performance ranges for line power-factor conditions between 1.0 and 0.6 lag.

3.1.2 Basic Lighting Impulse Insulation Levels (BIL)

Basic lighting impulse insulation level is a specific insulation level, expressed in kilovolts of the crest value of a standard lighting impulse (nominal 1.2 × 50 microsecond wave).

3.1.3 Burden

The burden of a voltage transformer is that property of the circuit connected to this secondary winding that determines the active and reactive power at its secondary terminals. The burden is expressed in total ohms impedance, with the effective resistive and reactive components, or as the total volt-amperes and power factor at the specified value of voltage and frequency.

3.1.4 Indoor Voltage Transformers

An indoor voltage transformer is a voltage transformer which is constructed for installation indoors where it is protected from the weather.

See ANSI/IEEE C57.13 for an explanation of usual and unusual service conditions.

3.1.5 Outdoor Voltage Transformer

An outdoor voltage transformer is a voltage transformer which is constructed for installation outdoors where it is exposed to the water.

See ANSI/IEEE C57.13 for an explanation of usual and unusual service conditions.

3.1.6 Primary Winding

The primary of a voltage transformer is the winding intended to be on the energy input side.

3.1.7 Secondary Winding

The secondary winding of a voltage transformer is the winding intended to be connected to the measuring or control devices.

3.1.8 Thermal Burden Rating

The thermal burden rating of a voltage transformer is the volt-amperes output that the transformer will supply continuously at rated secondary voltage without causing the specified temperature limitations to be exceeded.

3.1.9 Voltage Transformers

A voltage transformer is an instrument transformer intended to have its primary winding connected in shunt with a power supply circuit, the voltage of which is to be measured or controlled.

3.2 Primary Voltage Rating and Bil's

The primary voltage ratings and corresponding basic lighting impulse insulation levels shall be as shown in Table 3-1.

3.3 STANDARD RATINGS

a. The frequency rating shall be 60 hertz.
b. The standard accuracy class for voltage transformers and the corresponding limits of transformer correction factor shall be as shown in Table 3-2. The relationship between the limits of ratio correction factor and phase angles for limiting values of transformer correction factors shown in Fig. 3-1.
c. Standard burdens for accuracy rating purposes shall be based on 120 volts. The standard burdens are shown in Table 3-3.

3.3 NAMEPLATE

Voltage transformers shall be provided with nameplates which shall include, as a minimum, the following information:

a. Manufacturer's name or trademark
b. Manufacturer's type
c. Manufacturer's serial number (SER) numerals only
e. Rated primary voltage (PRI)
f. Ratio
g. Basic Lighting impulse insulation level (BIL_____kV)
h. Rated frequency (Hz)
i. Thermal burden rating or ratings at ambient temperature or temperatures (_____ VA at _____ °C AMB)
j. Accuracy ratings (standard burdens at which the transformer meets 0.3 accuracy class)

3.4 RATED BURDEN FOR 0.3 ACCURACY CLASS

The burden capability of each BIL shall be not less than that shown in Table 3-4.

3.5 THERMAL BURDEN RATINGS

The minimum thermal burden rating at rated voltage and frequency shall be 75 volt-amperes at a 55°C ambient temperature for transformers rated 240 through 600 volts and 200 voltamperes at a 55°C ambient temperature for transformers rated 2400 through 14400 volts.

Copyright National Electrical Manufacturers Association
Provided by IHS under license with NEMA
No reproduction or networking permitted without license from IHS
Not for Resale

3.6 TEST CARD

Voltage transformers shall be provided with a certificate of test, approximately 3 × 5 inches in dimension, which shall include, as a minimum, the following information:

a. Manufacturer's name or trademark
b. Manufacturer's type
c. Manufacturer's serial number
d. Space for user identification number
e. Rated primary and secondary volts; rating primary volts and ratio to one, or rated secondary volts and ratio to one.
f. Factory accuracy test readings at 100 percent rated primary voltage with zero burden and the maximum standard burden for 0.3 accuracy test
g. Date of factory accuracy test
h. Initials of factory accuracy tester (unless tested automatically).

3.7 POLARITY MARKING OF TERMINALS

The relative instantaneous polarity of the primary and secondary terminals shall be clearly indicated by permanent markings that cannot be obliterated easily.

When the polarity is indicated by letters, the letter H shall be used to indicate the primary terminals and the letter X shall be used to indicate the secondary terminals. H1 and X1 shall be the same polarity.

3.8 TERMINAL IDENTIFICATION

The primary and secondary terminals shall be prominently identified in such a manner that the identification cannot be obliterated easily.

3.9 PRIMARY VOLTAGE IDENTIFICATION

The rated primary voltage shall be prominently identified in such a manner that it cannot be obliterated easily.

3.10 TERMINALS

3.10.1 Primary Terminals

Primary terminals shall be electrically and mechanically suitable for use with either copper aluminum stranded or solid conductors from No. 10 to No. 6 AWG.

3.10.2 Secondary Terminals

Secondary terminals shall be electrically and mechanically suitable for use with copper stranded or solid conductors from No. 14 to No. 8 AWG.

3.11 SPACE FOR USER IDENTIFICATION NUMBER

A space 2 to 2-3/4 inches long shall be provided for holding a 1/2 inch wide badge for marking the user identification number.

3.12 DIMENSIONS

The dimensions of indoor or outdoor voltage transformers rated 10 and 30 kV BIL and of indoor voltage transformers rated 60 kV through 110 kV BIL shall be as shown in Fig. 3-2.

The dimensions and maximum envelope of outdoor voltage transformers rated 60 kV through 110 kV BIL, including base, body, and secondary conduit boxes shall be as shown in Fig. 3-3.

Table 3-1
PRIMARY VOLTAGE RATINGS AND BASIC LIGHTING IMPULSE INSULATION LEVELS

BIL kV	Marked Ration	Primary Voltage Ratings, Volts
10	2:1	240
10	2.4:1	288
10	2.5:1	300
10	4:1	480
10	5:1	600
30	4:1	480
30	5:1	600
60	20:1	2400
60	35:1	4200
60	40:1	4800
75	35:1	4200
75	40:1	4800
75	60:1*	7200
95	60:1*	7200
95	70:1*	8400
95	100:1	12000
95	120:1	14400
110	60:1*	7200
110	70:1*	8400
110	100:1	12000
110	120:1	14400

Copyright National Electrical Manufacturers Association
Provided by IHS under license with NEMA
No reproduction or networking permitted without license from IHS
Not for Resale

Table 3-2
STANDARD ACCURACY CLASS FOR VOLTAGE TRANSFORMERS

Accuracy Class	Limits of Transformer Correction Factor	Limits of Power Factor (Lagging) of Metered Power Load
0.3	1.003–0.997	0.6–1.0

Table 3-3
STANDARD BURDENS FOR VOLTAGE TRANSFORMERS

			Characteristics on 120 Volt Basis		
Designation	Standards Burdens* Volts-Amps.	Power Factor	Resistance Ohms	Inductance Henrys	Impedance Ohms
W	12.5	0.10	115.2	3.04	1152
X	25	0.70	403.2	1.09	576
M	35	0.20	82.3	1.07	411
Y	75	0.85	163.2	0.268	192
Z	200	0.85	61.2	0.101	72

*These burden designations have no significance except at 60 Hz.

Table 3-4
MINIMUM BURDEN CAPABILITY

Basic Lighting Impulse Insulation Level kV	Primary Voltage, Rating, Volts	Accuracy Classes and Burdens			
		W	X	M	Y
10 and 30	240–600	0.3	0.3	0.3	0.3
60 (indoor)	2400–4800	0.3	0.3	0.3	0.3
75 (indoor)	4200–4800	0.3	0.3	0.3	0.3
95 (indoor)	7200–14400	0.3	0.3	0.3	0.3
110 (indoor)	7200–14400	0.3	0.3	0.3	0.3
60 (outdoor)	2400–4800	0.3	0.3	0.3	0.3
75 (outdoor)	4200–7200	0.3	0.3	0.3	0.3
95 (outdoor)	7200–1200	0.3	0.3	0.3	0.3
110 (outdoor)	7200–14400	0.3	0.3	0.3	0.3

Copyright National Electrical Manufacturers Association
Provided by IHS under license with NEMA
No reproduction or networking permitted without license from IHS
Not for Resale

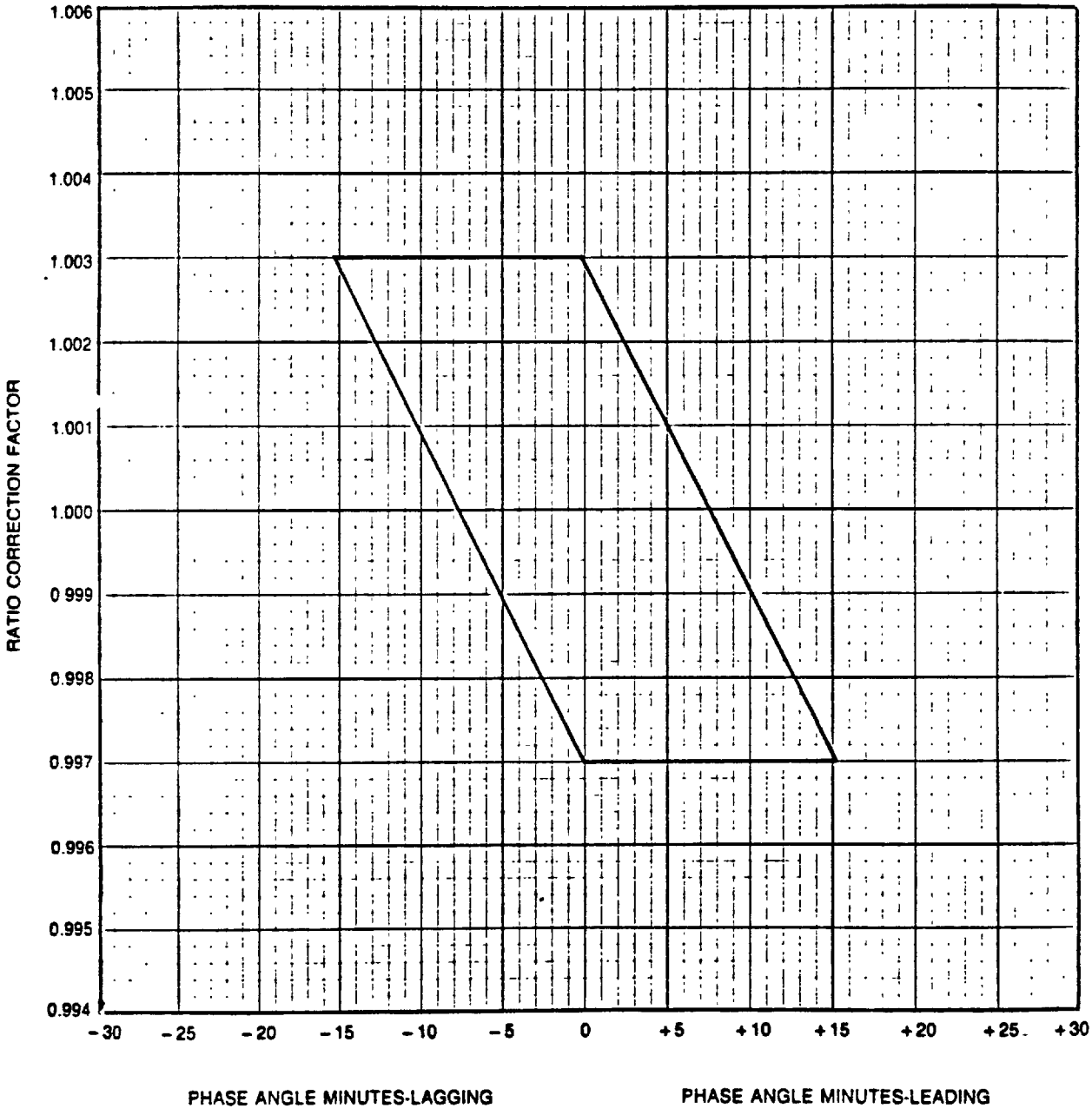

Figure 3-1
0.3 ACCURACY CLASS LIMITS FOR VOLTAGE TRANSFORMERS

Copyright National Electrical Manufacturers Association
Provided by IHS under license with NEMA
No reproduction or networking permitted without license from IHS
Not for Resale

MINIMUM ELECTRICAL CHARACTERISTICS[1]

BIL	UNFUSED MAXIMUM OVERALL DIMENSIONS			FUSED MAXIMUM OVERALL DIMENSIONS			FUSED OR UNFUSED MOUNTING DIMENSIONS		
KV	A	B	C	A	B	C	M	N_1	N_2
10	6¼	8¾	6¾	6¼	9¼	8	5	4	
30	6½	9¼	7¼	6½	9½	8	5	5	1 11/16
60	7¼	11½	8½	8	11¾	9½	5½	8 7/16	7 3/8
75	10¼	14	11	10¾	15¾	11¾*	8	12¼	10¼
95 AND 110	10¼	14	11	10¾	15¾	11¾*	8	12¼	10¼

*12¾ FOR SINGLE FUSE DESIGN.

DIMENSIONS

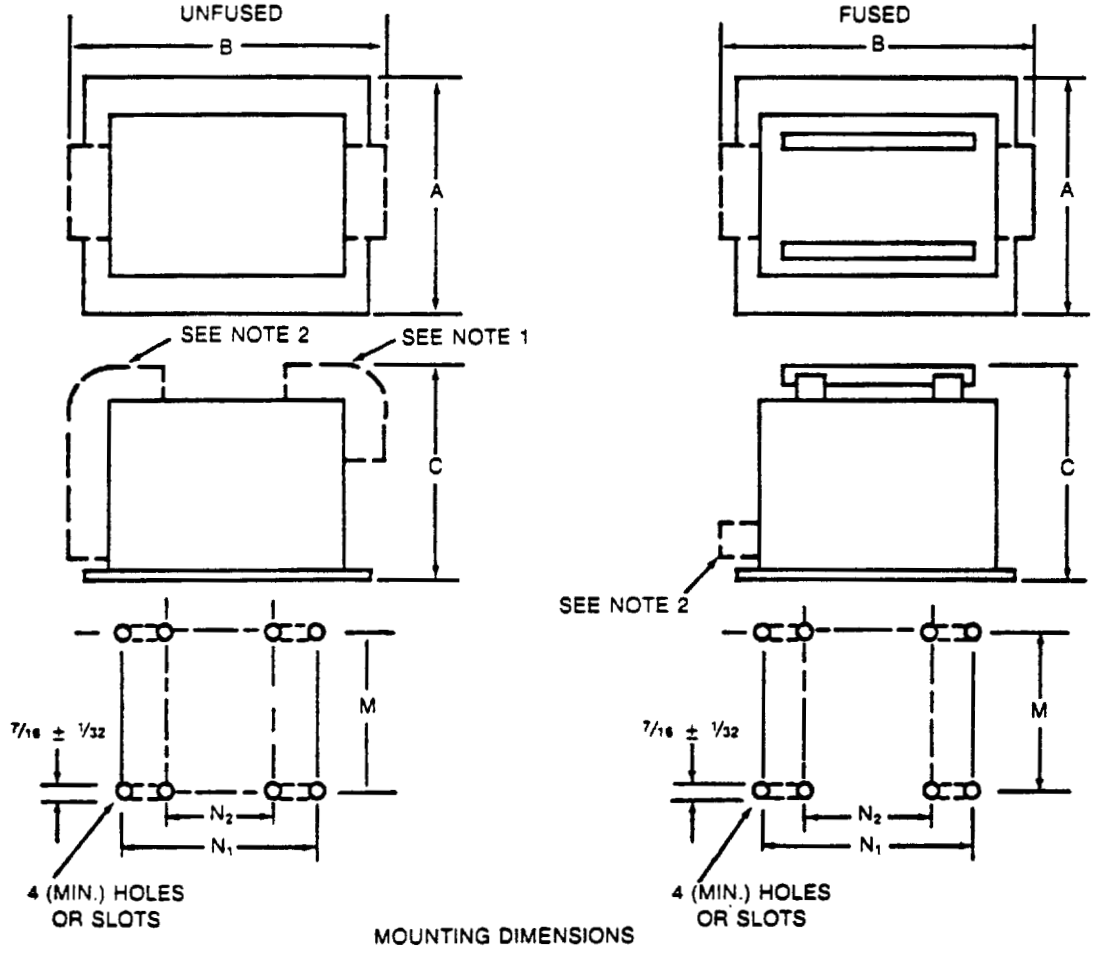

MOUNTING DIMENSIONS

ALL DIMENSIONS IN INCHES. UNLESS OTHERWISE INDICATED, THE TOLERANCE IS PLUS OR MINUS 1/16 INCH.

NOTE 1: PRIMARY TERMINALS, AND PRIMARY TERMINALS COVERS IF PROVIDED.

NOTE 2: SECONDARY TERMINALS, AND SECONDARY TERMINALS COVERS IF PROVIDED.

Figure 3-2
DIMENSIONS OF VOLTAGE TRANSFORMERS
INDOOR-10 kV BIL THROUGH 110 kV BIL
OUTDOOR-10 kV BIL AND 30 kV BIL

Copyright National Electrical Manufacturers Association
Provided by IHS under license with NEMA
No reproduction or networking permitted without license from IHS
Not for Resale

MINIMUM ELECTRICAL CHARACTERISTICS

BIL Kv	WITHOUT MOUNTING BRACKETS MAXIMUM OVERALL DIMENSIONS			MOUNTING DIMENSIONS		WITH MOUNTING BRACKETS MAXIMUM OVERALL DIMENSIONS				MOUNTING DIMENSIONS		
	A	B	C	M	N	A	B	C	D	E	F	P
60	11 1/2	13	13	8 1/2	6 1/4	11 1/2	15	13 1/2	6 1/2	1 7/8	3 3/4	7 5/8
75	14 1/2	15 1/2	18 1/2	10	8 5/8	14 1/2	17 1/2	21	12 1/2	1 7/8	7 7/8	8 7/8
95	11 1/2	13	13	8 1/2	6 1/4	11 1/2	15	13 1/2	6 1/2	1 7/8	3 3/4	7 5/8
110 (Size A)	14 1/2	15 1/2	18 1/2	10	8 5/8	14 1/2	19 3/4	21	12 1/2	1 7/8	7 7/8	8 7/8
110 (Size B)	14 1/2	15 1/2	18 1/2	8 1/2	6 1/4	14 1/2	19 3/4	21	12 1/2	1 7/8	3 3/4	7 5/8

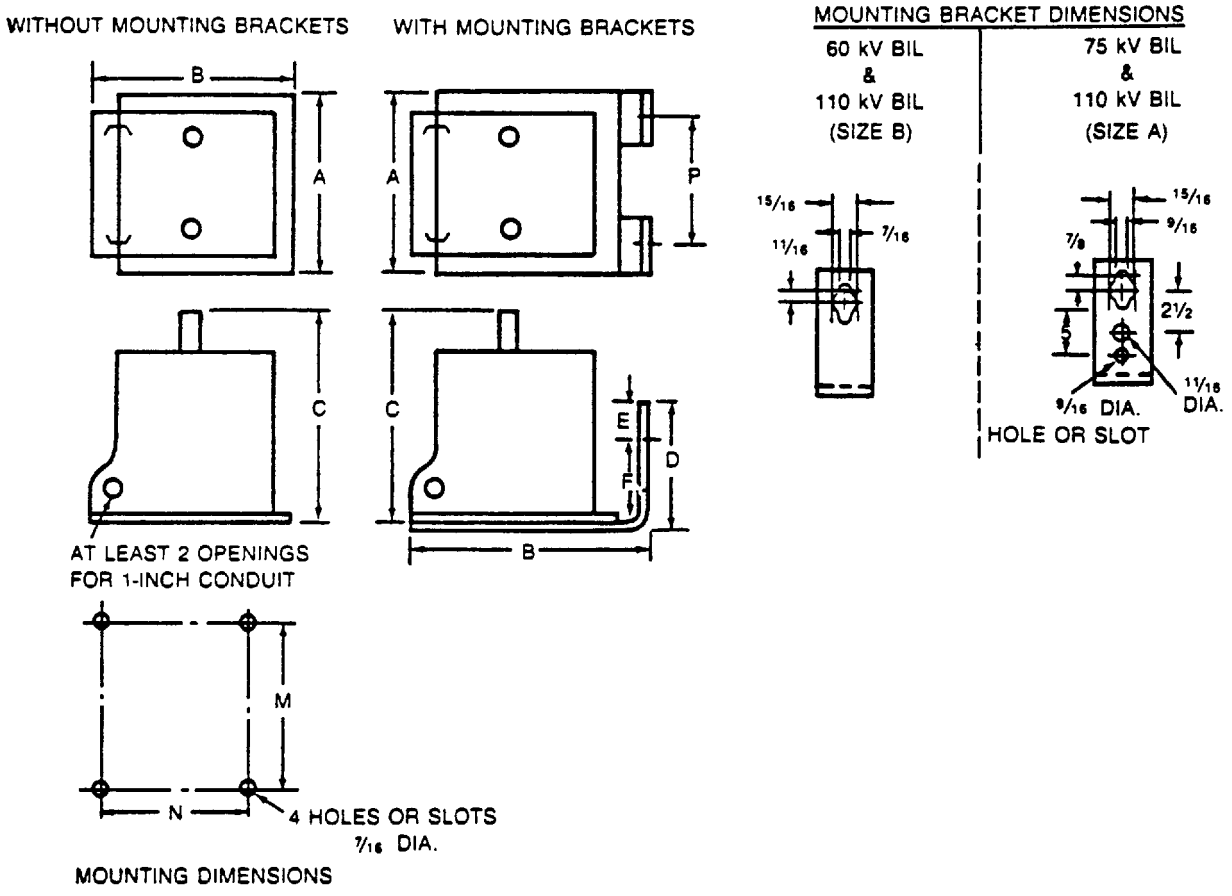

ALL DIMENSIONS IN INCHES. TOLERANCE ON DIAMETERS OF HOLES, SLOTS AND KEYHOLES IS PLUS OR MINUS 1/32 INCH. UNLESS OTHERWISE INDICATED, OTHER TOLERANCES ARE PLUS OR MINUS 1/16 INCH.

Figure 3-3
DIMENSIONS OF OUTDOOR VOLTAGE TRANSFORMERS, 60 kV BIL THROUGH 110 kV BIL

Copyright National Electrical Manufacturers Association
Provided by IHS under license with NEMA
No reproduction or networking permitted without license from IHS
Not for Resale

APPENDIX
CIRCLE METHOD FOR DETERMINATION OF VOLTAGE TRANSFORMER ACCURACY

The accuracy of a voltage transformer is directly affected by the burden connected to the secondary of the transformer. This burden is usually expressed in terms of volt-amperes and percent power factor.

The circle method provides an easy means of determining the accuracy of a voltage transformer at any desired burden by using only the phase angle and ratio correction factor (RCF) at 0 volt-ampere burden and one other known burden. See Figure A-1. Normally the manufacturer furnishes this information with the transformer.

Graph paper which is scaled so that a given distance represents 0.001 units of the RCF axis and 3.438 minutes on the phase angle axis is necessary. A sample appears below.

EXAMPLE

The following data are test results at 120 secondary volts for a 2400:120 volt voltage transformer. At 0 volt-ampere burden,

RCF = 0.9979 and phase angle = +2.0 minutes. At 50 volt-amperes, 85 percent power factor burden, RCF = 1.0040 and phase angle = _1.0 minute. Performance at other volt-ampere and power factor burden can now be plotted by making radii proportional to volt-amperes, and angles equal to power factor angles.

Copyright National Electrical Manufacturers Association
Provided by IHS under license with NEMA
No reproduction or networking permitted without license from IHS
Not for Resale

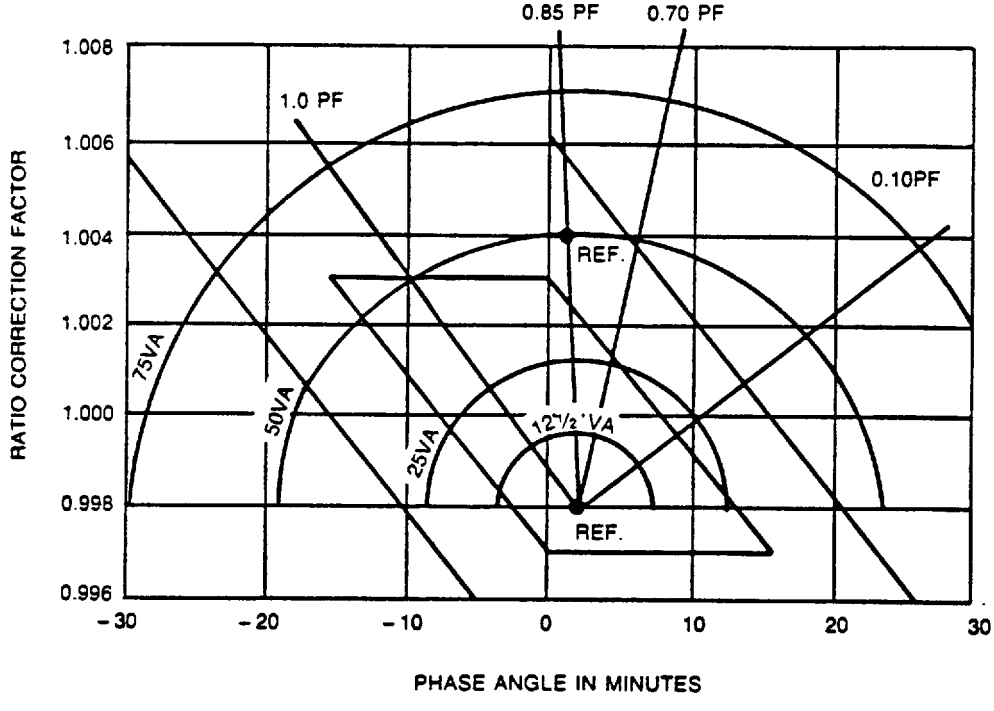

NOTE —REFERENCE POINTS REPRESENTING TWO SETS OF GIVEN PERFORMANCE DATA ARE PLOTTED ON THE GRID. POINTS ON THE LINE CONNECTING THE TWO GIVEN BURDENS REPRESENT PERFORMANCE AT VARIOUS BURDENS WITH THE SAME POWER FACTOR.

Figure A-1
CIRCLE METHOD FOR DETERMINATION OF VOLTAGE TRANSFORMER ACCURACY

Copyright National Electrical Manufacturers Association
Provided by IHS under license with NEMA
No reproduction or networking permitted without license from IHS
Not for Resale

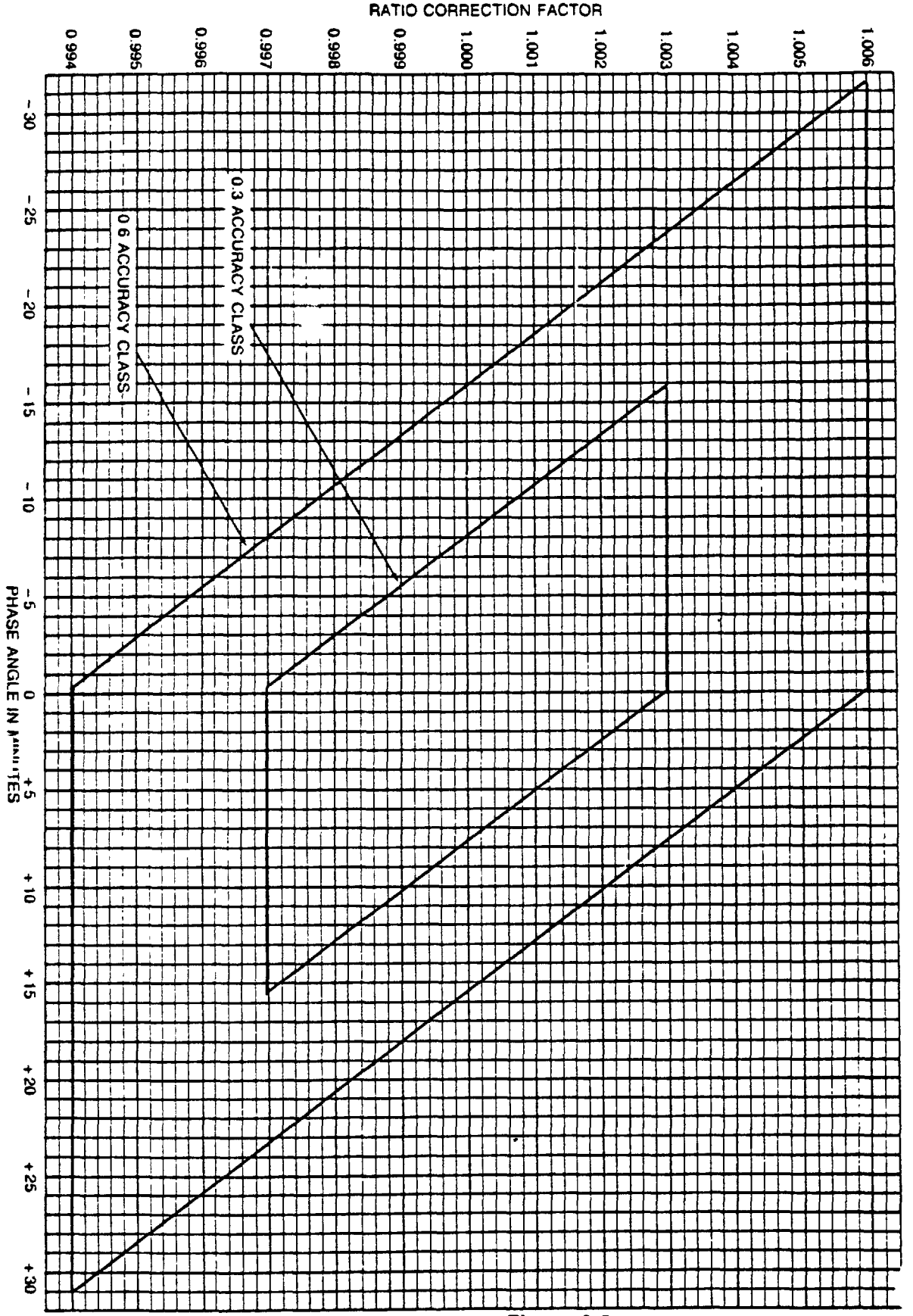

Figure A-2
SAMPLE OF GRAPH PAPER SPECIFICALLY SCALED FOR VOLTAGE TRANSFORMER CIRCLE DIAGRAM

Copyright National Electrical Manufacturers Association
Provided by IHS under license with NEMA
No reproduction or networking permitted without license from IHS
Not for Resale

NEMA STANDARDIZIATION BACKGROUND

The purpose of NEMA standards, their classification, and status are set forth in certain clauses of the NEMA *Standardization Policies and Procedures* manual and are referenced below:

Purpose of Standards

National Electrical Manufacturers Association Standards are adopted in the public interest and are designed to eliminate misunderstandings between the manufacturer and the purchaser and to assist the purchaser in selecting and obtaining the proper product for their particular needs. Existence of a National Electrical Manufacturers Association Standard does not in any respect preclude any member or nonmember from manufacturing or selling products not conforming to the standard.

Definition of a Standard

A standard of the National Electrical Manufacturers Association defines a product, process, or procedure with reference to one or more of the following: nomenclature, composition, dimensions, tolerances, safety, operating characteristics, performance, rating, testing, and the service for which they are designed.

(Standardization Policies and Procedures, p. 1)

Dimensions

Where dimensions are given for interchangeability purposes, alternate dimensions satisfying the other provisions of the Standards Publication may be capable of otherwise equivalent performance.

(Standardization Policies and Procedures, p. 6)

Categories of Standards

National Electrical Manufacturers Association Standards are of three classes, which have received the affirmative vote of at least two-thirds of the Subdivision votes cast in the affirmative or negative:

1. NEMA Standard, which relates to a product, process, or procedure commercially standardized and subject to repetitive manufacture.
2. Suggested Standard for Future Design, which may not have been regularly applied to a commercial product, but which suggests a sound engineering approach to future development.
3. Adoptive Standard, which is adopted in whole or in part from the standards of another organization, either domestic, regional, or international.

(Standardization Policies and Procedures, pp. 5)

Authorized Engineering Information

Authorized Engineering Information consists of explanatory data and other engineering information of an informative character not falling within the classification of NEMA Standard or Suggested Standard for Future Design, which standard has received the affirmative vote of at least two-thirds of the Subdivision votes cast in the affirmative or negative.

(Standardization Policies and Procedures, pp. 5)

Identification of Status

Standards in NEMA Standards Publications are identified as "NEMA Standard," "Suggested Standard for Future Design," or "Adoptive Standard." These indicate the status of the standard. A statement incorporating the auxiliary verb "shall" indicates that compliance with a requirement is mandatory for compliance with the standard. These classes of standards are identified in the foreword or throughout the text.

The material identified as "Authorized Engineering Information" is designated similarly. Statements incorporating other auxiliary verbs such as "should," "may," etc. refer to the authorized engineering information and not to procedures required for compliance with the standard.

Copyright National Electrical Manufacturers Association
Provided by IHS under license with NEMA
No reproduction or networking permitted without license from IHS
Not for Resale

ELECTRICAL MEASURING EQUIPMENT SECTION
OF THE
NATIONAL ELECTRICAL MANUFACTURERS ASSOCIATION

ABB Power T & D Company, Inc.
Raleigh, NC 27604

Anchor Electric Company
Manchester, NH 03105-0959

Circle AW Products
Portland, OR 97223

The Durham Company
Lebanon, MO 65536

GE
Somersworth, NH 03878

Landis & Gyr Metering, Inc.
Lafayette, IN 47903-7180

Meter Devices Company, Inc.
Canton, OH 44706

Metricom, Inc.
Los Gatos, CA 95030-2375

Milbank Manufacturing Company
Kansas City, MO 64141-0028

Schlumberger
Norcross, GA 30092

Scientific Columbus
Columbus, OH 43228

Square D Company
Palatine, IL 60067

Superior Technology, Inc.
Canton, OH 44707

Copyright National Electrical Manufacturers Association
Provided by IHS under license with NEMA
No reproduction or networking permitted without license from IHS
Not for Resale